https://truckmanualshub.com/

TOYOTA

REPAIR MANUAL

8FBCU 20, 25, 28, 30, 32
8FBCHU 25

VOL. 1

Pub. No. CU346

https://truckmanualshub.com/

SECTION INDEX

NAME	SECTION
GENERAL	0
BATTERY	1
CONTROL SYSTEM	2
MULTI-FUNCTION DISPLAY	3
TROUBLESHOOTING	4
MOTOR	5
DRIVE UNIT	6
FRONT AXLE	7
REAR AXLE	8
STEERING	9
BRAKE	10
BODY	11
MATERIAL HANDLING SYSTEM	12
MAST	13
CYLINDER	14
OIL PUMP	15
OIL CONTROL VALVE	16
SAS FUNCTIONS	17
APPENDIX	18

Sections indicated by solid characters are included in this manual.
Sections indicated by half-tone characters: See vol. 2.

https://truckmanualshub.com/

GENERAL

	Page
EXTERIOR VIEWS	0-2
VEHICLE MODEL	0-3
FRAME NUMBER	0-4
HOW TO USE THIS MANUAL	0-5
EXPLANATION METHOD	0-5
TERMINOLOGY	0-6
ABBREVIATIONS	0-6
SI UNITS	0-7
OPERATIONAL TIPS	0-8
JACK-UP POINT	0-10
HOISTING THE VEHICLE	0-11
CAUTION FOR TOWING	0-11
ATTENTIVE POINTS ON SAS	0-12
CIRCUIT TESTER	0-13
STANDARD BOLT & NUT TIGHTENING TORQUE	0-15
BOLT STRENGTH CLASS IDENTIFICATION METHOD	0-15
PRECOAT BOLTS	0-18
HIGH PRESSURE HOSE FITTING TIGHTENING TORQUE	0-18
WIRE ROPE SUSPENSION ANGLE LIST	0-19
SAFE LOAD FOR EACH WIRE ROPE SUSPENSION ANGLE	0-19
COMPONENTS WEIGHT	0-20
RECOMMENDED LUBRICANT QUANTITY & TYPES	0-20
LUBRICATION CHART	0-21
PERIODIC MAINTENANCE	0-22
PERIODIC REPLACEMENT OF PARTS AND LUBRICANTS	0-27

https://truckmanualshub.com/

EXTERIOR VIEWS

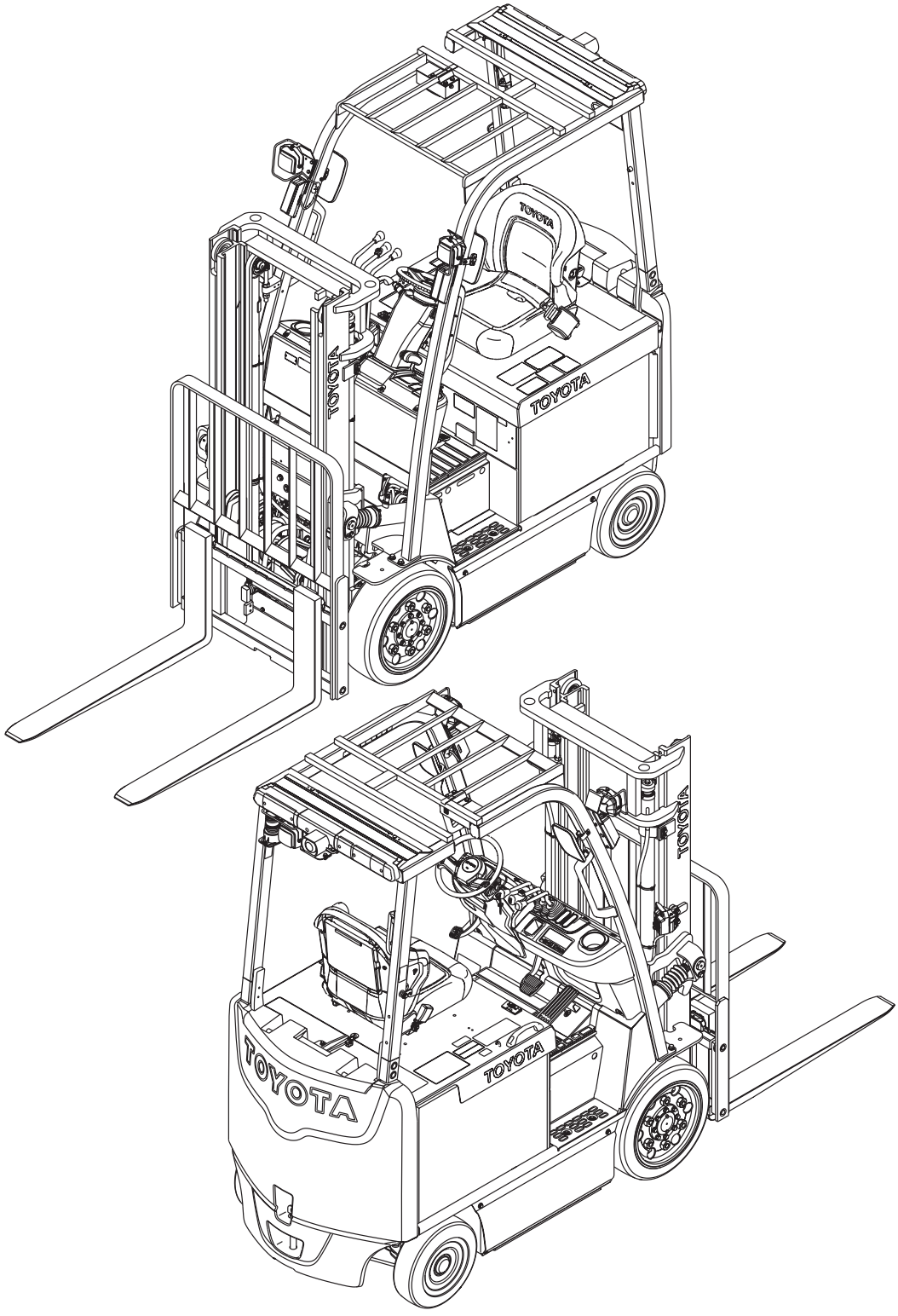

https://truckmanualshub.com/

VEHICLE MODEL

Model Code	Load Capacity	Vehicle Model	Voltage	Remarks
20	4000 lbs	8FBCU20	36V/48V	
25	5000 lbs	8FBCU25	↑	
		8FBCHU25	↑	
28	5500lbs	8FBCU28	↑	
30	6000 lbs	8FBCU30	↑	
32	6500 lbs	8FBCU32	↑	USA·CANADA·MEXICO only

https://truckmanualshub.com/

FRAME NUMBER

Frame No. Punching Position

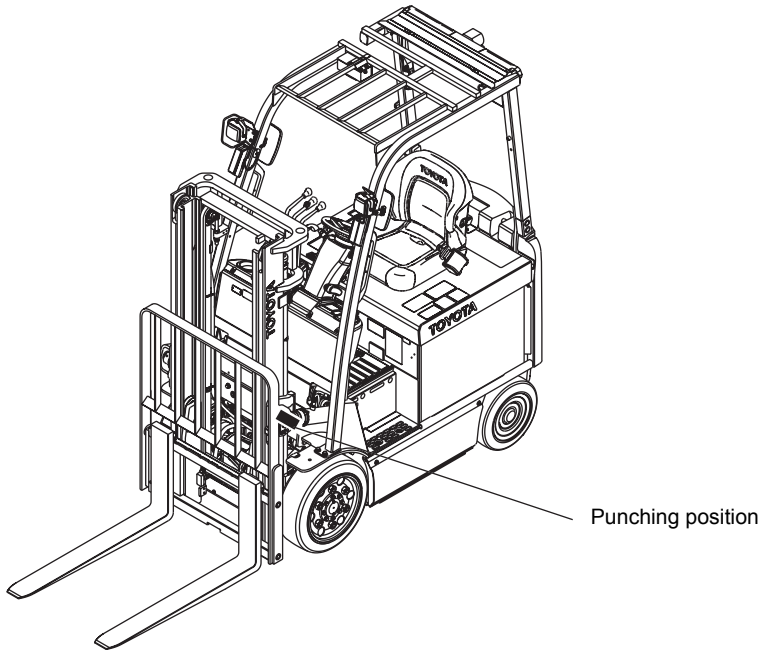

Vehicle Model	Punching format
8FBCU20	8FBCU25-60011
8FBCU25	* 8FBCU25Ⓔ60011
8FBCHU25	8FBCHU25-60011
8FBCU28	8FBCU28-60011
	* 8FBCU28Ⓔ60011
8FBCU30	8FBCU32-60011
8FBCU32	* 8FBCU32Ⓔ60011

*: EEC spec.

HOW TO USE THIS MANUAL

EXPLANATION METHOD

1. Operation procedure

Example of description in pattern B

DISASSEMBLY·INSPECTION·REASSEMBLY

Tightening torque unit T = N·m (kgf·cm) [ft·lbf]

- Step Nos. are partially sometimes omitted in illustrations.
- When a part requiring tightening torque instruction is not indicated in the illustration, the part name is described in the illustration frame.

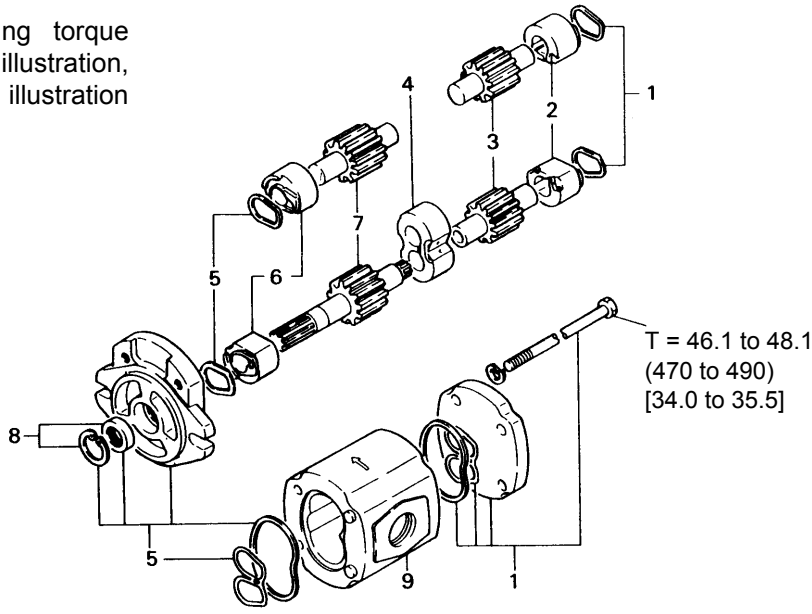

Disassembly Procedure

1 Remove the cover. **[Point 1]**

2 Remove the bushing. **[Point 2]** ← Operation explained later

3 Remove the gear.

Point Operations

[Point 1] Explanation of key point for operation with an illustration

Disassembly: ↙

Put a match mark when removing the pump cover.

[Point 2]

Inspection:

Measure the bush inside diameter.

Limit: 19.12 mm (0.7528 in)

https://truckmanualshub.com/

2. How to read components figures

(1) The components figure uses the illustration in the parts catalog for the vehicle model. Please refer to the catalog for checking the part name.
The number at the right shoulder of each components figure indicates the Fig. number in the parts catalog.

(2) Refer to the parts catalog for the latest information.

(Example)

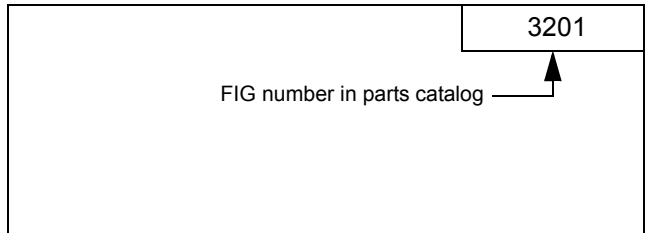

3. Matters omitted in this manual
This manual omits description of the following jobs, but perform them in actual operation:

(1) Cleaning and washing of removed parts as required

(2) Visual inspection (partially described)

TERMINOLOGY

Caution:
Important matters of which negligence may cause hazards on human body. Be sure to observe them.

Note:
Important items of which negligence may cause breakage or breakdown, or matters in operation procedure requiring special attention.

Standard: Values showing allowable range in inspection and adjustment.
Limit: Maximum or minimum allowable value in inspection or adjustment.

ABBREVIATIONS

Abbreviation (code)	Meaning	Abbreviation (code)	Meaning
ASSY	Assembly	RR	Rear
ATT	Attachment	SAE	Society of Automotive Engineers (USA)
EHPS	Electronically controlled fully hydraulic power steering	SAS	System of active stability
FHPS	Fully hydraulic power steering	SOL	Solenoid
LH	Left hand	SST	Special service tool
FR	Front	STD	Standard
OPS	Operator Presence Sensing	T=	Tightening torque
OPT	Option	○○T	Number of teeth (○○)
O/S	Oversize	U/S	Undersize
PS	Power steering	W/	With
RH	Right hand	L/	Less

SI UNITS

Meaning of SI

This manual uses SI units. SI represents the International System of Units, which was established to unify the various systems of units used in the past for smoother international technical communication.

New Units Adopted in SI

Item	New unit	Conventional unit	Conversion rate*1 (1 [conventional unit] = X [SI unit])
Force*2	N (newton)	kgf	1 kgf = 9.80665 N
Torque*2 (Moment)	N·m	kgf·cm	1 kgf·cm = 9.80665 N·m
Pressure*2	Pa (pascal)	kgf/cm^2	1 kgf/cm^2 = 98.0665 kPa = 0.0980665 MPa
↑	↑	mmHg	1 mmHg = 0.133322 kPa
Revolving speed	rpm	rpm	1 rpm = 1 r/min
Spring constant*2	N/mm	kgf/mm	1 kgf/mm = 9.80665 N/mm
Volume	l	cc	1 cc = 1 mℓ
Power	W	PS system	1 PS = 0.735499 kW
Heat quantity	W·h	cal	1 kcal = 1.16279 W·h
Specific fuel consumption	g/W·h	g/PS·h	1 g/PS·h = 1.3596 g/kW·h

<Reference>

*** 1: X represents the value in SI units as converted from 1 [in conventional units], which can be used as the rate for conversion between conventional and SI units.**

*** 2: In the past, kilogram [kg] representing mass was often used in place of weight kilogram [kgf], which should be used as the unit of force.**

Conversion between Conventional and SI Units

Equation for conversion

Value in SI unit = Conversion rate × Value in conventional unit	Conversion rate: Figure corresponding to X in the conversion rate column in the table above
Value in conventional unit = Value in SI unit ÷ Conversion rate	

When converting, change the unit of the value in conventional or SI units to the one in the conversion rate column in the table above before calculation. For example, when converting 100 W to the value in conventional unit PS, first change it to 0.1 kW and divide by the conversion rate 0.735499.

https://truckmanualshub.com/

OPERATIONAL TIPS

1. Safe operation
   (1) After jacking up, always support with wooden blocks or rigid stands.
   (2) When hoisting the vehicle or its heavy component, use wire rope(s) with a sufficient reserve in load capacity.
   (3) Always disconnect the battery plug before the inspection or servicing of electrical parts.
2. Tactful operation
   (1) Prepare the mechanic tools, necessary measuring instruments (circuit tester, megger, oil pressure gauge, etc.) and SSTs before starting operation.
   (2) Before disconnecting wiring, always check the cable color and wiring state.
   (3) When overhauling functional parts, complicated portions or related mechanisms, arrange the parts neatly to prevent confusion.
   (4) When disassembling and inspecting such a precision part as the control valve, use clean tools and operate in a clean location.
   (5) Follow the described procedures for disassembly, inspection and reassembly.
   (6) Replace, gaskets, packing and O-rings with new ones each time they are disassembled.
   (7) Use genuine Toyota parts for replacement.
   (8) Use specified bolts and nuts. Observe the specified tightening torque at the time of reassembly. (Tighten to the center of the specified tightening torque range.)
   If no tightening torque is specified, tighten the bolt or nut according to the standard tightening torque table.
3. Protection of functional parts
   (1) Thoroughly check each connector for any failure in or imperfect connection before reconnecting the battery plug after the end of vehicle inspection or maintenance.
   Failure in or imperfect connection of connectors related to controllers, especially, may damage elements inside the controllers.
4. Confirming defect status
   Do not start immediate disassembly or replacement, but first confirm if such disassembly or replacement is actually needed.
5. Handling of waste fluid, etc.
   When draining waste fluid from the vehicle, always receive it with an appropriate container.
   Since careless or arbitrary discharge or disposal of oil, fuel, coolant, oil filter, battery or any other harmful substance may cause adverse affect to people or environmental destruction, sort each waste and always ask an authorized contractor for appropriate disposal.
6. Handling of electronic parts

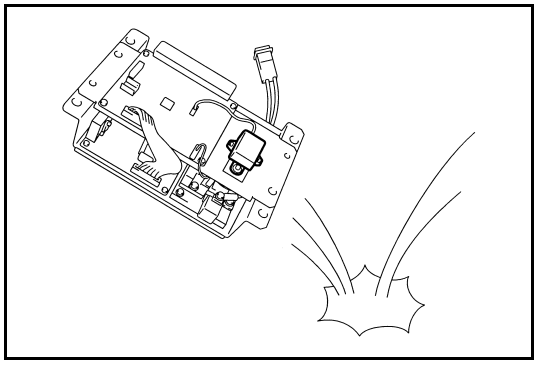

   (1) Never apply impacts to electronic parts such as a microcomputer or relay.
   (2) Never let electronic parts be exposed to a high temperature or humidity.
   (3) Do not touch connector pins since they may be deformed or be damaged due to static electricity.

7. Disconnect the battery plug
   When unplugging the battery plug, use the grip. Do not pull up the cable.

For example:

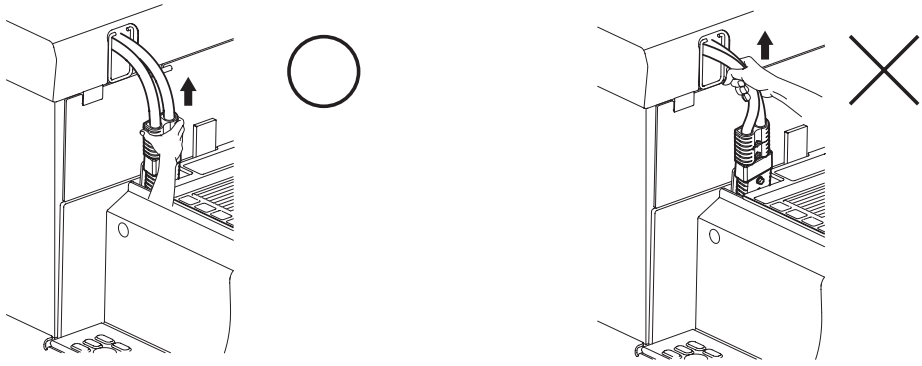

https://truckmanualshub.com/

JACK-UP POINT

Strictly observe the following instructions when jacking up the vehicle.

- When a load is on the fork, unload it and park the vehicle on a flat floor. Be sure to avoid an inclined or rugged place.
- Use a jack with ample capacity and jack up the vehicle at the specified jack-up point. Jacking up at any other point will be dangerous.
- Never operate while the vehicle is held with a jack. Always support the frame with a wooden block after jacking up.
- In any case, never let a part of the body (including hands and feet) be under the jacked-up vehicle.

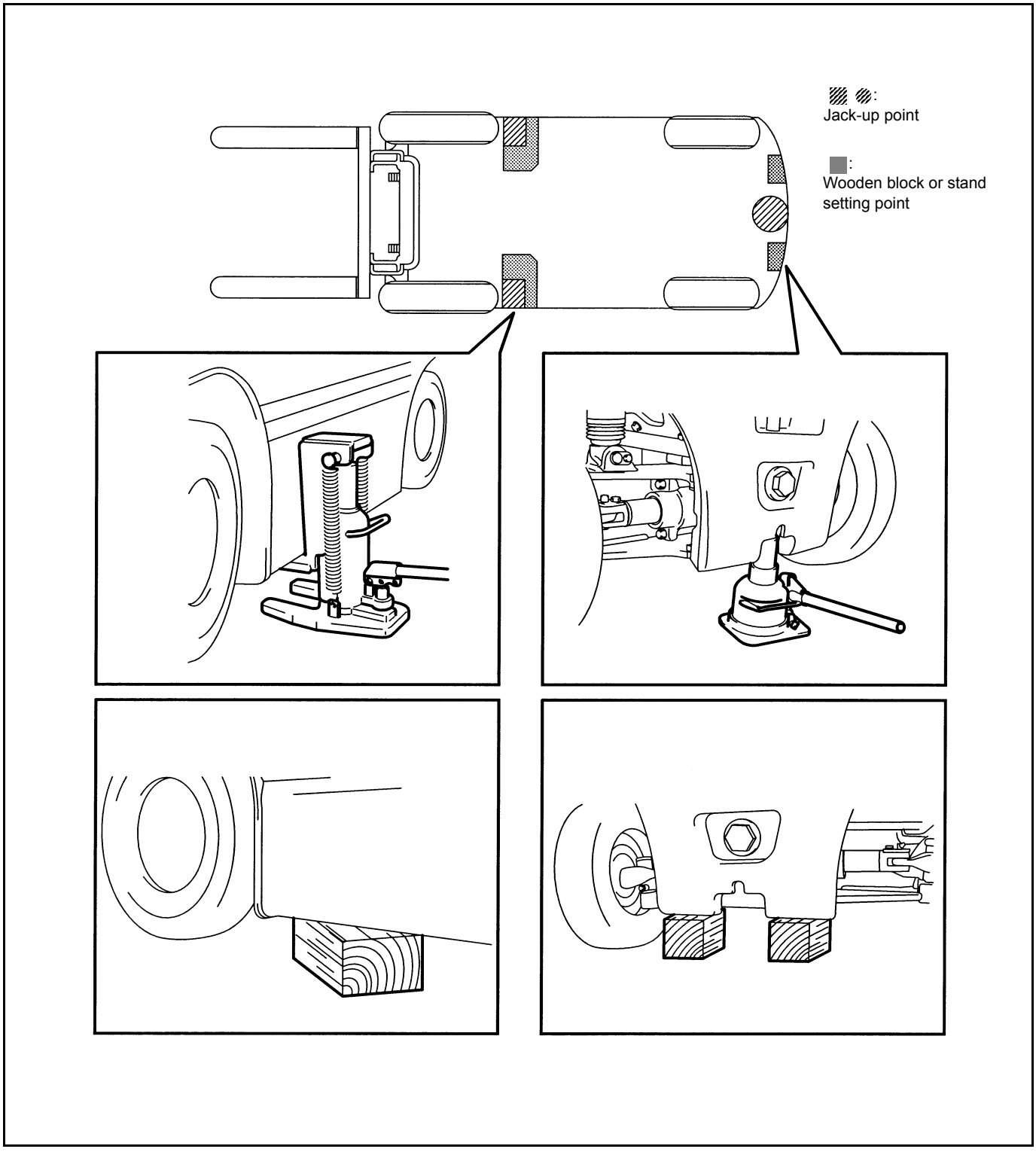

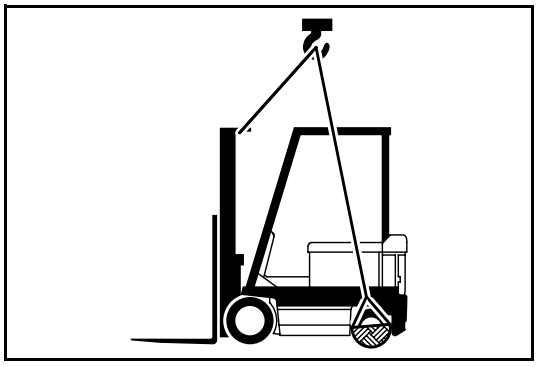

HOISTING THE VEHICLE

When hoisting the vehicle, use the mast hook on the front of the vehicle and a wire net on the rear wheel.

Caution:
- **Use wire ropes having sufficient strength.**
- **Never hoist the forklift by the weight hook holes or head guard.**

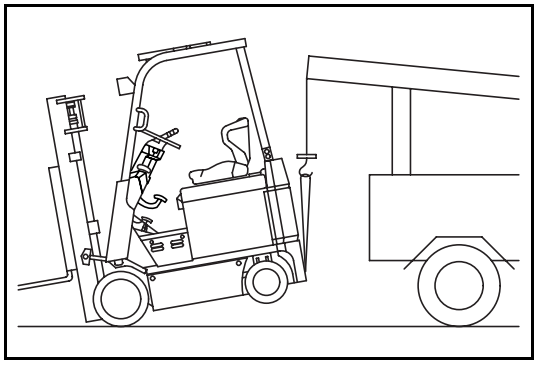

CAUTION FOR TOWING

1. When towing the forklift, always lift the rear wheels away from the ground.
2. The traveling speed in towing must not exceed the maximum traveling speed of the forklift.

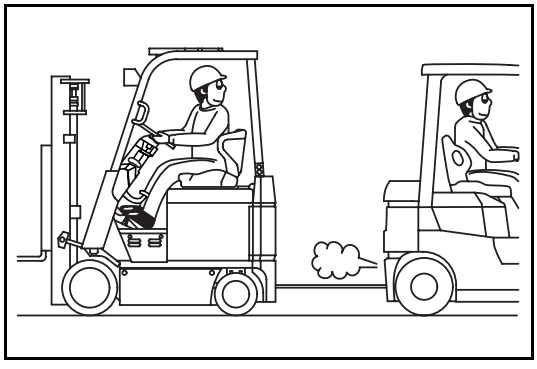

3. Always set the key switch to OFF and the direction switch to the neutral position before starting towing.
   In case of towing by connection with a wire rope with the operator on the forklift, however, set the key switch to ON (PS operation) and always set the direction switch to the neutral position.
4. Before towing, either remove the fork or take an action to prevent fork contact with the ground due to bounding.

https://truckmanualshub.com/

ATTENTIVE POINTS ON SAS

1. Reference should be made to seperate manual “New Model Feature 8FBCU20 to 32 Pub. No.PU319” for the explanations of SAS functions and operations.
2. Read Section 17 “SAS Precautions for Repair” on Page 17-9 in this repair manual in advance.
3. Whenever the repair or replacement is performed to the place where relative to SAS function, maching procedure by which the SAS regain proper function must be performed. (See 17-18)
4. The warning on the SAS caution label must be confirmed when the modification or change is such as to change the original specification.
   If improper, change the label. (See Page 17-22)
5. Care should always be exercised for safety operation whenever you operate the truck.
   Make distinction between the SAS featured trucks and those of none, because the control features are different.
6. The SAS oil control valves comprise many precision valves. Since dirty or contaminated hydraulic oil will adversely affect the functions of these valves, always wash the parts clean at the time of installation after disassembly or for replacement of hydraulic parts (valves, piping, etc.). Periodic replacement of the hydraulic oil is very important.
7. Since this vehicle uses high-precision electronic devices, modification of electrical parts may cause faults. Always use genuine Toyota parts when replacing or installing electrical parts (auxiliary equipment, optional parts, etc.)

CIRCUIT TESTER

Circuit testers are available in both the analog and digital types. They should be used selectively according to the purpose of measurement.

Analog type: This type is convenient for observing movement during operation, but the measured value should only be used for reference or rough judgement.
Digital type: Fairly accurate reading is possible, but it is difficult to observe the variation or movement.

1. Difference in measurement results with the digital type and analog type
   * The result may be different between measurements with the analog type and digital type.
     Always use a circuit tester according to its operation manual.
     Cautions when the polarities are different between the analog type and digital type are described below.

(1) Analog circuit tester

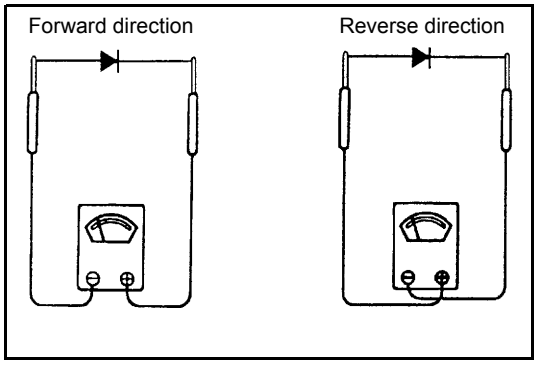

Measurement result example
Tester range: kΩ range

	Analog type
Forward	Continuity exists
	11 kΩ
Reverse	No continuity
	∞

(2) Digital circuit tester

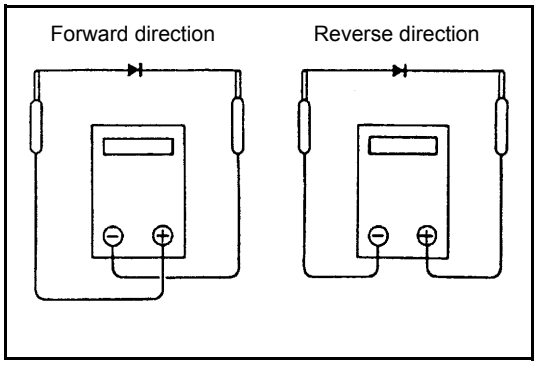

Measurement result example
Tester range: MΩ range

	Digital type
Forward	No continuity
	1
Reverse	Continuity exists
	2 MΩ

https://truckmanualshub.com/

2. Difference in result of measurement with circuit tester
   The circuit tester power supply voltage depends on the tester type. 1.5 V, 3.0 V or 6.0 V is used.
   The resistance of a semiconductor such as a diode varies with the circuit tester power supply voltage.
   The diode characteristics are shown in the figure below.

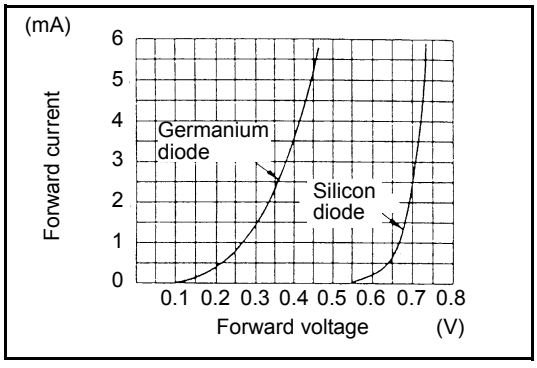

The resistance values of the same semiconductor measured with two types of circuit testers having different power supply voltages are different.

This manual describes the results of measurement with a circuit tester whose power supply voltage is 3.0 V.

3. Difference in measurement result by measurement range (analog type)
   In the analog type circuit tester, changing the measurement range switches over the internal circuit to vary the circuit resistance. Even when the same diode is measured, the measurement result varies with the measurement range.

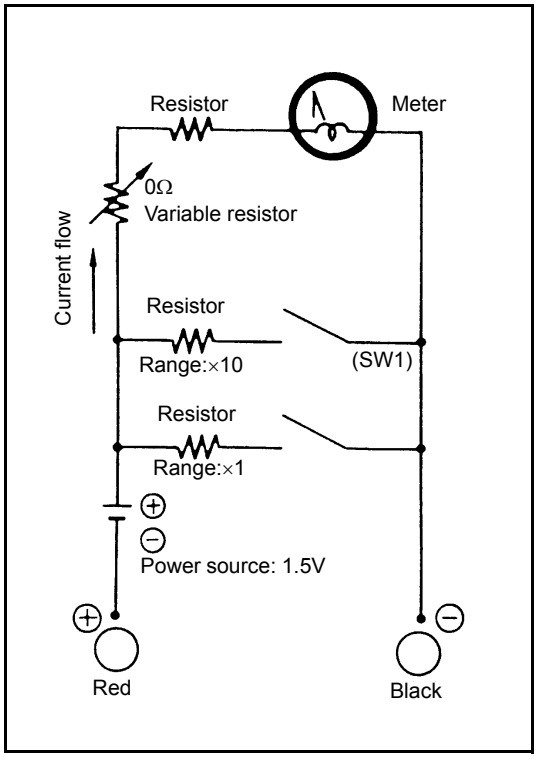

Always use the range described in the repair manual for measurement.

STANDARD BOLT & NUT TIGHTENING TORQUE

Standard bolt and nut tightening torques are not indicated.
Judge the standard tightening torque as shown below.

1. For tightening torque of hexagon head bolt, welded bolt and stud bolt with the standard bearing surface, identify bolt class based on the below chart and then determine using the tightening torque table.
2. For tightening torque of hexagon flange bolts, identify bolt class based on the below chart and then determine using the tightening torque table.
3. For tightening torque of nuts, check the mating bolt and use the method 1.

BOLT STRENGTH CLASS IDENTIFICATION METHOD

Identification by Bolt Shape

	Shape and class	Class
Hexagon head bolt	Bolt head No.	4 = 4T 5 = 5T 6 = 6T 7 = 7T 8 = 8T
	No mark	4T
	Two protruding lines	5T
	Three protruding lines	7T
	Four protruding lines	8T
Welded bolt	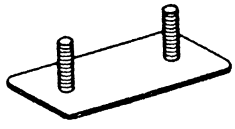	4T
Stud bolt	No mark	4T
	Grooved	6T

https://truckmanualshub.com/

Identification by Part No.

	Part No.	Shape
Hexagon head bolt	91611-40625 Length (mm) Diameter (mm) Class	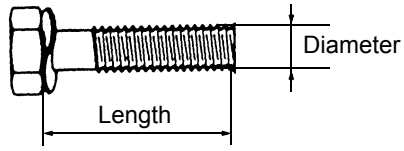
Stud bolt	92132-40614 Length (mm) Diameter (mm) Class	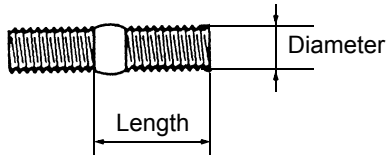

Tightening Torque Table

Class	Diameter mm	Pitch mm	Specified torque		
			N·m	kgf·cm	ft·lbf
4T	6	1.0	5.4	55	4
	8	1.25	13	130	9
	10	1.25	25	260	19
	12	1.25	47	480	35
	14	1.5	75	760	55
	16	1.5	113	1150	83
5T	6	1.0	6.5	65	5
	8	1.25	16	160	12
	10	1.25	32	330	24
	12	1.25	59	600	43
	14	1.5	91	930	67
	16	1.5	137	1400	101
6T	6	1.0	7.8	80	6
	8	1.25	19	190	14
	10	1.25	39	400	29
	12	1.25	72	730	53
	14	1.5	108	1100	80
	16	1.5	172	1750	127
7T	6	1.0	11	110	8
	8	1.25	25	260	19
	10	1.25	52	530	38
	12	1.25	95	970	70
	14	1.5	147	1500	108
	16	1.5	226	2300	166
8T	6	1.0	12	120	9
	8	1.25	29	300	22
	10	1.25	61	620	45
	12	1.25	108	1100	80
	14	1.5	172	1750	127
	16	1.5	265	2700	195

Identification by Bolt Shape (Hexagon flange bolt)

Class	4.8T	6.8T	8.8T	10.9T	11.9T
Hexagon flange bolt			 	 	
	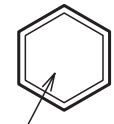		 	—	—

Tightening Torque Table (Hexagon flange bolt)

Class	Diameter mm	Pitch mm	Specified torque		
			N·m	kgf·cm	ft·lbf
4.8T	6	1.0	5.5	56	4
	8	1.25	13	130	9
	10	1.25	27	280	20
	12	1.25	50	510	37
	14	1.5	78	800	58
	16	1.5	120	1220	88
6.8T	6	1.0	7.5	80	6
	8	1.25	19	190	14
	10	1.25	39	400	29
	12	1.25	71	720	52
	14	1.5	110	1120	81
	16	1.5	170	1730	125
8.8T	6	1.0	12	120	9
	8	1.25	29	300	22
	10	1.25	61	620	45
	12	1.25	110	1120	81
	14	1.5	175	1780	129
	16	1.5	270	2750	199
10.9T	6	1.0	15.5	160	12
	8	1.25	38	390	28
	10	1.25	80	820	59
	12	1.25	145	1480	107
	14	1.5	230	2350	170
	16	1.5	360	3670	266
11.9T	6	1.0	17.5	180	13
	8	1.25	42	430	31
	10	1.25	89	910	66
	12	1.25	160	1630	118
	14	1.5	260	2650	192
	16	1.5	400	4080	295

https://truckmanualshub.com/

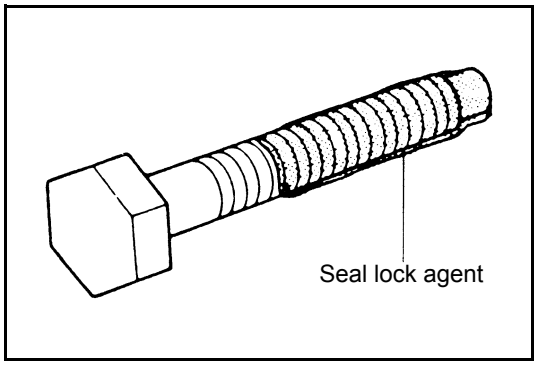

PRECOAT BOLTS

(Bolts with seal lock agent coating on threads)

1. Do not use the precoat bolt as it is in either of the following cases:
   (1) After it is removed.
   (2) When the precoat bolt is moved (loosened or tightened) by tightness check, etc.

Note:
For torque check, use the lower limit of the allowable tightening torque range. If the bolt moves, retighten it according to the steps below.

2. Method for reuse of precoat bolts
   (1) Wash the bolt and threaded hole. (The threaded hole must be washed even for replacement of the bolt.)
   (2) Perfectly dry the washed parts by air blowing.
   (3) Coat the specified seal lock agent to the threaded portion of the bolt.

HIGH PRESSURE HOSE FITTING TIGHTENING TORQUE

1. When connecting a high pressure hose, wipe the hose fitting and mating nipple contact surfaces with clean cloth to remove foreign matters and dirt. Also check no dent or other damage on the contact surfaces before installation.
2. When connecting a high pressure hose, hold the hose to align the fitting with the nipple and tighten the fitting.
3. The maximum tightening torque must not exceed twice the standard tightening torque.

Nominal diameter of screw	Standard tightening torque N·m (kgf·cm) [ft·lbf]		Hose inside diameter mm (in)
	Standard	Tightening range	
7/16 — 20UNF	25 (250) [18.1]	24 ~ 26 (240 ~ 270) [17.4 ~ 19.5]	6 (0.24)
9/16 — 18UNF	34 (350) [25.3]	32 ~ 36 (330 ~ 370) [29.3 ~ 26.8]	9 (0.35)
3/4 — 16UNF	59 (600) [43.4]	56 ~ 62 (570 ~ 630) [41.2 ~ 45.6]	12 (0.47)
7/8 — 14UNF	59 (600) [43.4]	56 ~ 62 (570 ~ 630) [41.2 ~ 45.6]	12 (0.47)
7/8 — 14UNF	78 (800) [57.9]	74 ~ 82 (740 ~ 840) [53.5 ~ 60.8]	15 (0.59)
1·1/16 — 12UNF	118 (1200) [86.8]	112 ~ 123 (1140 ~ 1250) [82.5 ~ 90.4]	19 (0.75)
1·5/16 — 12UNF	137 (1400) [101.3]	130 ~ 144 (1330 ~ 1470) [96.2 ~ 106.4]	25 (0.98)
PF1/4	25 (250) [18.1]	24 ~ 26 (240 ~ 270) [17.4 ~ 19.5]	6 (0.24)
PF3/8	34 (350) [25.3]	32 ~ 36 (330 ~ 370) [23.9 ~ 26.8]	9 (0.35)
PF1/2	59 (600) [43.4]	56 ~ 62 (570 ~ 630) [41.2 ~ 45.6]	12 (0.47)
PF3/4	118 (1200) [86.8]	112 ~ 123 (1140 ~ 1250) [82.5 ~ 90.4]	19 (0.75)
PF1	137 (1400) [101.3]	130 ~ 144 (1330 ~ 1470) [96.2 ~ 106.4]	25 (0.98)

WIRE ROPE SUSPENSION ANGLE LIST

Lifting angle	Tension	Compression	Suspension method	Lifting angle	Tension	Compression	Suspension method
0°	1.00 time	0 time	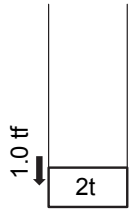	90°	1.41 time	1.00 time	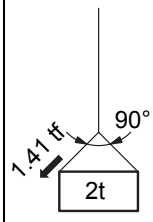
30°	1.04 time	0.27 time	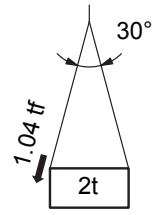	120°	2.00 time	1.73 time	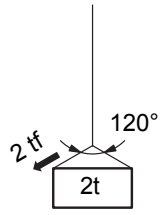
60°	1.16 time	0.58 time	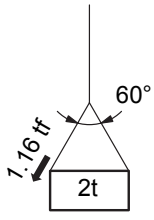				

SAFE LOAD FOR EACH WIRE ROPE SUSPENSION ANGLE

Unit: N (tf) [lbf]

Rope diameter	Cutting load	Single-rope suspension	Two-rope suspension				Four-rope suspension			
		0°	0°	30°	60°	90°	0°	30°	60°	90°
6 mm (0.24 in)	21380 (2.18) [4807]	3040 (0.31) [683.6]	6080 (0.62) [1367]	5880 (0.6) [1323]	5200 (0.53) [1169]	4310 (0.44) [970]	12160 (1.24) [2734]	11770 (1.2) [2646]	10400 (1.06) [2337]	8630 (0.88) [1940]
8 mm (0.32 in)	31480 (3.21) [7078]	4410 (0.45) [992.3]	8830 (0.9) [1985]	8530 (0.87) [1918]	7650 (0.78) [1720]	6280 (0.64) [1411]	17650 (1.8) [3969]	17060 (1.74) [3937]	15300 (1.56) [3440]	12550 (1.28) [2322]
10 mm (0.4 in)	49230 (5.02) [11.69]	6960 (0.71) [1565.6]	14020 (1.43) [3153]	13440 (1.37) [3021]	11770 (1.2) [2646]	9810 (1.0) [2205]	27460 (2.8) [6174]	26480 (2.7) [5954]	23540 (2.4) [5292]	19610 (2.0) [4410]
12.5 mm (0.5 in)	76880 (7.84) [17387]	10980 (1.12) [2469.5]	21570 (2.2) [4851]	21280 (2.1) [4631]	18630 (1.9) [4190]	14710 (1.5) [3308]	43150 (4.4) [9702]	41190 (4.2) [9261]	37270 (3.8) [8379]	29420 (3.0) [6615]
14 mm (0.56 in)	96400 (9.83) [21675]	13730 (1.4) [3087]	27460 (2.8) [6174]	26480 (2.7) [5954]	23540 (2.4) [5292]	18630 (1.9) [4190]	54920 (5.6) [12348]	52960 (5.4) [11907]	47070 (4.8) [10584]	37270 (3.8) [8379]

https://truckmanualshub.com/

COMPONENTS WEIGHT

Member	Models	Weight kg (lbs)
Battery ASSY	See page 1-2	
Drive motor ASSY	20~25	Approx. 127 (280)
	28~32	Approx. 145 (320)
Pump motor ASSY	20~32	Approx. 47 (104)
Counterweight	20·H25	Approx. 756 (1667)
	25	Approx. 1070 (2359)
	28	Approx. 1375 (3031)
	30	Approx. 1182 (2606)
	32	Approx. 1375 (3031)
V mast ASSY L/fork and backrest (with lift cylinder, max. lifting height: 3300 (130 in))	20·25	Approx. 460 (1014)
	30·32	Approx. 570 (1257)

RECOMMENDED LUBRICANT QUANTITY & TYPES

Description	Quantity ℓ (US gal)	Classification	Type
Drive unit	6.0 (1.58)	API GL-4	Hypoid gear oil SAE75W-80W
Hydraulic oil (V·FV·FSV mast: lifting height 3300 mm (130 in))	22.0 (5.81)	ISO VG32	Hydraulic oil
Brake	Proper quantity Reservoir Tank 0.2 (0.05)	—	SAE J-1703 DOT-3
Chassis parts	Proper quantity	—	• MP grease • Molybdenum disulfide grease
Battery	Proper quantity	—	Distilled water

Note:
Since the hydraulic oil volume varies with the mast specification, be sure to check finally with the level gauge.

LUBRICATION CHART

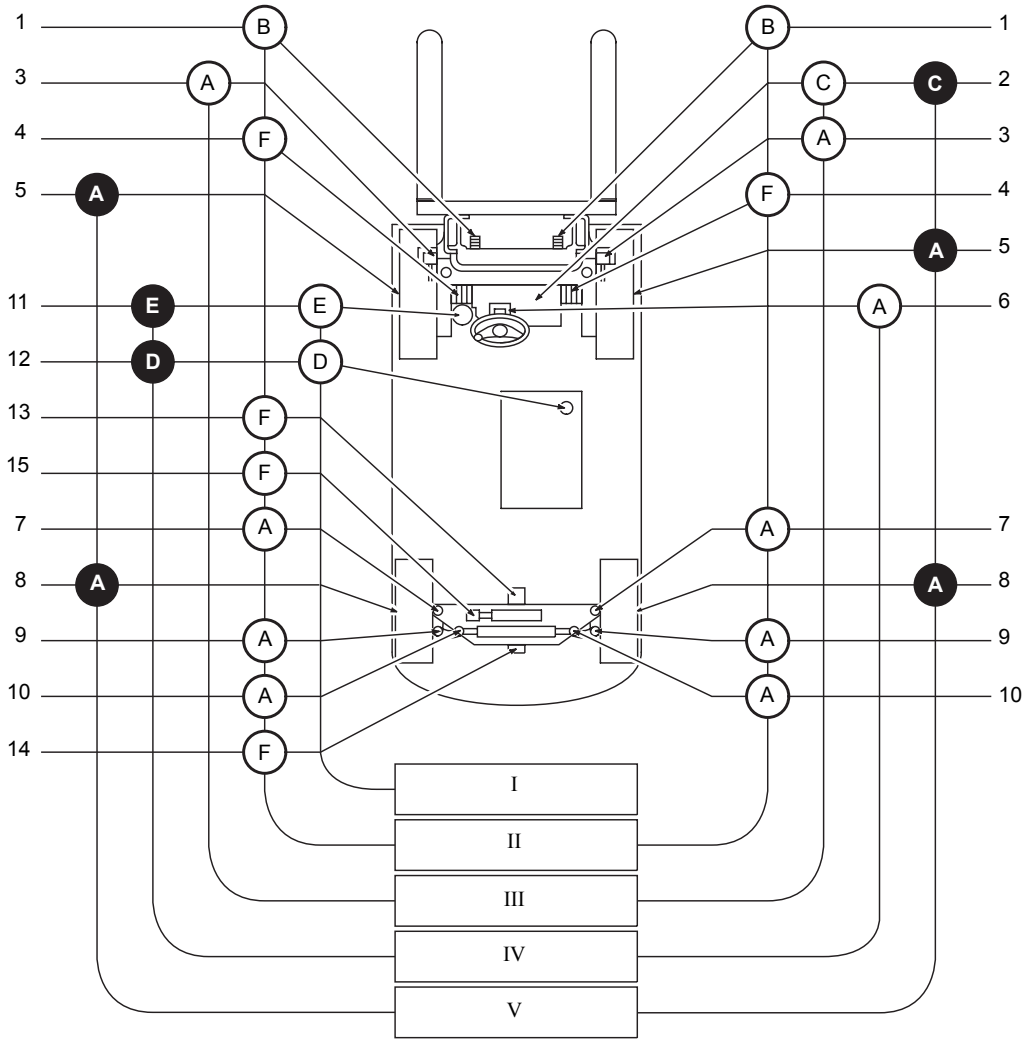

○ Inspection and addition
● Replacement
A MP grease
B Engine oil
C Hypoid gear oil
D Hydraulic oil
E Brake fluid
F Molybdenum disulfide greass

I. Inspect every 8 hours (daily)
II. Inspect every 40 hours (weekly)
III. Inspect every 250 hours (6 weeks)
IV. Inspect every 1000 hours (6 monthly)
V. Inspect every 2000 hours (annual)

1 Chain
2 Drive unit
3 Tilt cylinder front pin
4 Mast support bushing
5 Front wheel bearing
6 Tilt steering locking mechanism
7 Steering knuckle king pin
8 Rear wheel bearing
9 Tie rod end pin
10 Rear axle cylinder end pin
11 Brake master cylinder
12 Oil tank
13 Rear axle beam front pin
14 Rear axle beam rear pin
15 Swing lock cylinder crank and rod pin

https://truckmanualshub.com/

PERIODIC MAINTENANCE

Inspection Method

I : Inspection·Repair or replacement if required.
M : Measurement·Repair or adjustment if required.
T : Retightening C: Cleaning L: Lubrication
* : For new vehicle

Item \ Inspection Period		Every 6 weeks / Every 250 hours	Every 3 months / Every 500 hours	Every 6 months / Every 1000 hours	Every 12 months / Every 2000 hours
ELECTRICAL SYSTEM					
Motor	Rotation sound	I	←	←	←
	Looseness in the connecting parts	T	←	←	←
	Insulation resistance		M	←	←
Battery	Charging level	I	←	←	←
	Electrolyte level	I	←	←	←
	Electrolyte specific gravity	M	←	←	←
	Looseness in the connecting parts	I	←	←	←
	Abnormality in the upper portion of the battery case	I	←	←	←
	Insulation resistance		M	←	←
	Voltage measurement of each battery cell after charging				M
Magnet contactor	Contact looseness, damage, abrasion	I	←	←	←
	Operating condition of the auxiliary contact, contamination, abrasion	I	←	←	←
	Mounting condition of the arc shooter				I
	Operating condition and timings				I
	Looseness of the coil mounting parts				I
	Mounting condition of the main circuit lead wire, looseness				I
Micro switch	Operating condition and timing	I	←	←	←
	Damage and looseness of installing parts	I	←	←	←
Direction switch	Operation condition, damage	I	←	←	←
Controller	Operation condition	I	←	←	←
	Interior contamination, damage	C	←	←	←
	Motor input voltage				M
Fuse	Looseness	I	←	←	←

Item	Inspection Period	Every 6 weeks / Every 250 hours	Every 3 months / Every 500 hours	Every 6 months / Every 1000 hours	Every 12 months / Every 2000 hours
Wiring (including charging cord)	Harness deterioration, clamp damage and looseness	I	←	←	←
	Looseness in connecting parts, taping condition	I	←	←	←
	Connecting condition and damage of the battery connector	I	←	←	←
POWER TRANSFER SYSTEM					
Drive unit	Oil leakage	I	←	←	←
	Oil level	I	←	←	←
	Bolt or nut looseness				T
DRIVE SYSTEM					
Wheels	Tire cuts, damage and uneven wearing	I	←	←	←
	Loose rim and hub nuts	T	←	←	←
	Tire groove depth	M	←	←	←
	Metal chips, pebbles and other foreign matter trapped in tire grooves	I	←	←	←
	Rim, side bearing and disc wheel damage	I	←	←	←
	Abnormal sound and looseness of front wheel bearing	I	←	←	←
	Abnormal sound and looseness of rear wheel bearing	I	←	←	←
Front axle	Cracks, damage and deformation of housing				I
Rear axle	Cracks, damage and deformation of beam				I
	Abnormal noise looseness of rear axle bearing				I
	Looseness of axle beam in vehicle longitudinal direction	M*			M
STEERING SYSTEM					
Steering wheel	Play and looseness	I	←	←	←
	Function	I	←	←	←
Steering valve	Oil leak	I	←	←	←
	Looseness of mounting	T	←	←	←
Power steering	Oil leake	I	←	←	←
	Mounting and linkage looseness	I	←	←	←
	Damage of power steering hose				I
Knuckle	King pin looseness	I	←	←	←
	Cranks and deformation				I

https://truckmanualshub.com/

Item	Inspection Period	Every 6 weeks / Every 250 hours	Every 3 months / Every 500 hours	Every 6 months / Every 1000 hours	Every 12 months / Every 2000 hours
BRAKING SYSTEM					
Brake pedal	Play and reserve	M	←	←	←
	Braking effect	I	←	←	←
Parking brake	Operating force	I	←	←	←
	Braking effect	I	←	←	←
	Rod and cable looseness and damage	I	←	←	←
Brake pipe	Leak, damage and mounting condition	I	←	←	←
Reservoir tank	Leak and fluid level	I	←	←	←
Master cylinder and wheel cylinder	Function, wear, damage, leak and mounting looseness				I
Brake drum and brake shoe	Clearance between drum and lining	M	←	←	←
	Wear of shoe sliding portion and lining				I
	Drum wear and damage				I
	Shoe operating condition				I
	Anchor pin rusting				I
	Return spring fatigue				M
	Automatic adjuster function				I
Backing plate	Deformation, cracks and damage				I
	Loose mounting				T
MATERIAL HANDLING SYSTEM					
Forks	Abnormality of fork and stopper pin	I	←	←	←
	Misalignment between left and right fork fingers	I	←	←	←
	Cracks at fork root and welded part				I*1
Mast and lift bracket	Deformation and damage of each part and crack at welded part	I	←	←	←
	Mast and lift bracket looseness	I	←	←	←
	Wear and damage of mast support bushing				I
	Wear, damage and rotating condition of rollers	I	←	←	←
	Wear and damage of roller pins				I
	Wear and damage of mast strip	I	←	←	←
Chain and chain wheel	Tension, deformation and damage of chain	I	←	←	←
	Chain lubrication	I	←	←	←
	Elongation of chain				I
	Abnormality of chain anchor bolt	I	←	←	←
	Wear, damage and rotating condition of chain wheel	I	←	←	←
Various attachments	Abnormality and mounting condition of each part	I	←	←	←

Item	Inspection Period	Every 6 weeks / Every 250 hours	Every 3 months / Every 500 hours	Every 6 months / Every 1000 hours	Every 12 months / Every 2000 hours
HYDRAULIC SYSTEM					
Cylinder	Loosening and damage of cylinder mounting	T	←	←	←
	Deformation and damage of rod and rod end	I	←	←	←
	Cylinder operation	I	←	←	←
	Natural drop and natural forward tilt (hydraulic drift)	M	←	←	←
	Oil leak and damage	I	←	←	←
	Wear and damage of pin and pin support	I	←	←	←
	Lifting speed	M	←	←	←
	Uneven movement	I	←	←	←
Oil pump	Oil leak and abnormal sound	I	←	←	←
Hydraulic oil tank	Oil level and contamination	I	←	←	←
	Tank and oil strainer			C	←
	Oil leak	I	←	←	←
Control lever	Loose linkage	I	←	←	←
	Operation	I	←	←	←
Oil control valve	Oil leak	I	←	←	←
	Relief pressure measurement				M
	Relief valve and tilt lock valve functions	I	←	←	←
Hydraulic piping	Oil leak	I	←	←	←
	Deformation and damage	I	←	←	←
	Loose joint	T	←	←	←
SAFETY DEVICES, ETC.					
Head guard	Cracks at welded portion	I	←	←	←
	Deformation and damage	I	←	←	←
Back-rest	Loosening of mounting	T	←	←	←
	Deformation, crack and damage	I	←	←	←
Lighting system	Function and mounting condition	I	←	←	←
Horn	Function and mounting condition	I	←	←	←
Direction indicator	Function and mounting condition	I	←	←	←
Instruments	Functions	I	←	←	←
Backup buzzer	Function and mounting condition	I	←	←	←
Rear-view mirror	Dirt, damage	I	←	←	←
	Rear reflection status	I	←	←	←
Seat	Loosening and damage of mounting	I	←	←	←
	Seat belt damage and function	I	←	←	←

https://truckmanualshub.com/

Item	Inspection Period	Every 6 weeks	Every 3 months	Every 6 months	Every 12 months
		Every 250 hours	Every 500 hours	Every 1000 hours	Every 2000 hours
Body	Damage and cracks of frame, cross members, etc.				I
	Bolts and nuts looseness				T
SAS	Functions	I	←	←	←
	Loosening and damage at sensor mounting portion	I	←	←	←
	Damage, deformation, oil leakage and loosening of the mounting of functional parts	I	←	←	←
	Loosening and damage of wire harnesses	I	←	←	←
	Lock cylinder accumulator performance				I
	Rusting and corrosion of load sensor				I
Others	Grease up	L	←	←	←

PERIODIC REPLACEMENT OF PARTS AND LUBRICANTS

● : Replacement

Replacement timing / Item	Every 6 weeks	Every 3 months	Every 6 months	Every 12 months	Remarks
	Every 250 hours	Every 500 hours	Every 1000 hours	Every 2000 hours	
Drive unit oil				●	
Hydraulic oil	*1		●	←	
Hydraulic oil filter	●		●	←	
Wheel bearing grease				●	
Brake fluid			●	←	
Brake master cylinder rubber parts				●	
Wheel cylinder cup seals				●	
Brake fluid reservoir hose					*2
Power steering hose					*2
Power steering rubber parts					*2
Hydraulic hose					*2
Chain					*3
Swing lock cylinder					*4

*1: For new vehicle
*2: Replace every 2 years
*3: Replace every 3 years
*4: Replace every 10,000 hours

Replacement shall be made upon arrival of the operation hours or months, whichever is earlier.

https://truckmanualshub.com/

https://truckmanualshub.com/

BATTERY

Page

BATTERY COMPARTMENT AND REQUIRED WEIGHT 1-2
SERVICE STANDARD 1-3
DISPLAY 1-3
TROUBLESHOOTING 1-4
BATTERY ASSY 1-5
REMOVAL·INSTALLATION 1-5
INSPECTION 1-6
BATTERY STOPPER 1-8

https://truckmanualshub.com/

BATTERY COMPARTMENT AND REQUIRED WEIGHT

When the battery is to be purchased locally, always adjust the weight to satisfy the minimum required weight as shown in the table below.

See New Model Features (Pub. No. PU319) for the battery recommendation.

Models	Mast	Compartment dimensions mm (in.)				mm (in.) Height from ground V	Battery weight kg (lb)	
		Forward-Rear X	Width Y	Height Z			Necessary minimum with case	Referenced maximum with case
				STD	Battery ROLL-OUT SLIDE-OUT	Battery ROLL-OUT SLIDE-OUT		
8FBCU20 8FBCU25	Except QFV	775 (30.5)	992 (39.1)	605 (23.8)	585 (23.0)	470 (18.5)	1090 (2400)	1430 (3154)
	QFV	↑	↑	↑	↑	↑	1200 (2650)	↑
8FBCU28	ALL	↑	↑	↑	↑	↑	1090 (2400)	↑
8FBCHU25 8FBCU30 8FBCU32	ALL	870 (34.3)	↑	↑	↑	↑	1360 (3000)	1613 (3555)

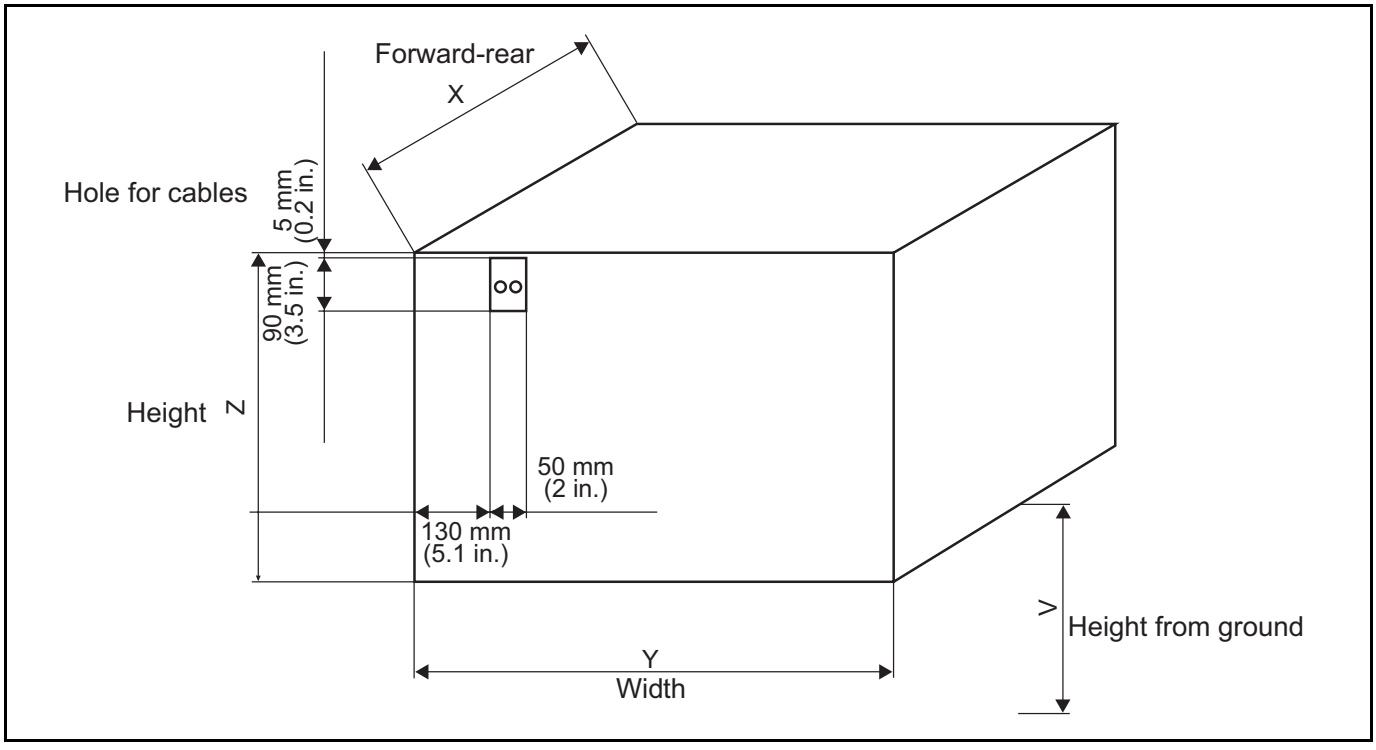

SERVICE STANDARD

Specific gravity upon full charge		1.280 [20°C (68°F)]
Specific gravity upon end of discharge		1.150 [20°C (68°F)]
Discharge end voltage	36 V	32.0 V
	48 V	42.5 V
Electrolyte		Refined dilute sulfuric acid
Fluid to be added		Distilled (deionized) water
Insulation resistance		1MΩ or more

DISPLAY

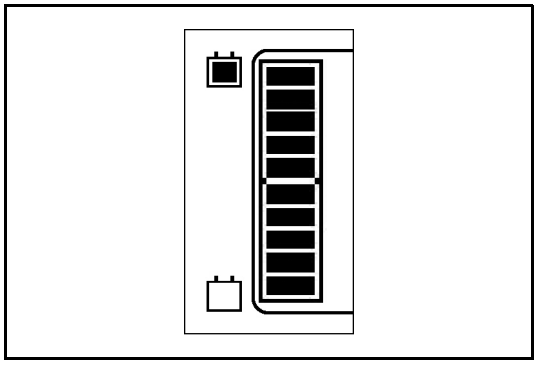

Battery Charge Indicator

The battery charge indicator indicates 10 levels of battery charge on the LCD.

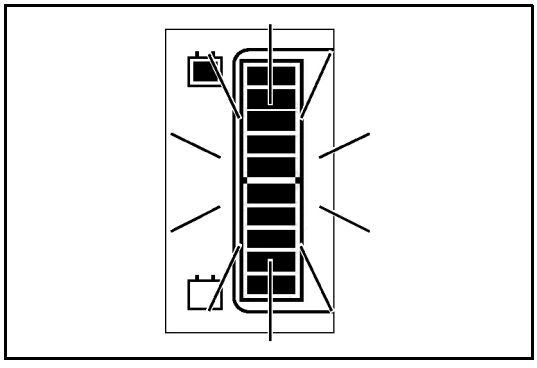

Battery Overdischarge Warning Function

When the battery becomes over discharged below the preset level in active “low battery level warning”, all segments in the battery level indicator blink and a buzzer sounds to warn the operator.

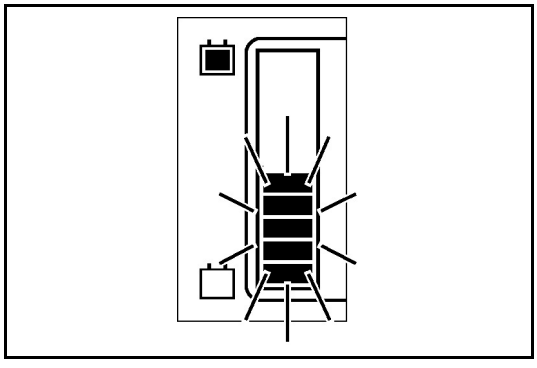

Low Remaining Battery Charge Warning

When the battery becomes below the preset level, the battery level indicator blinks. When the operator turns the key switch from OFF to ON with this condition, a buzzer will sound for five seconds to warn the operator.

https://truckmanualshub.com/

TROUBLESHOOTING

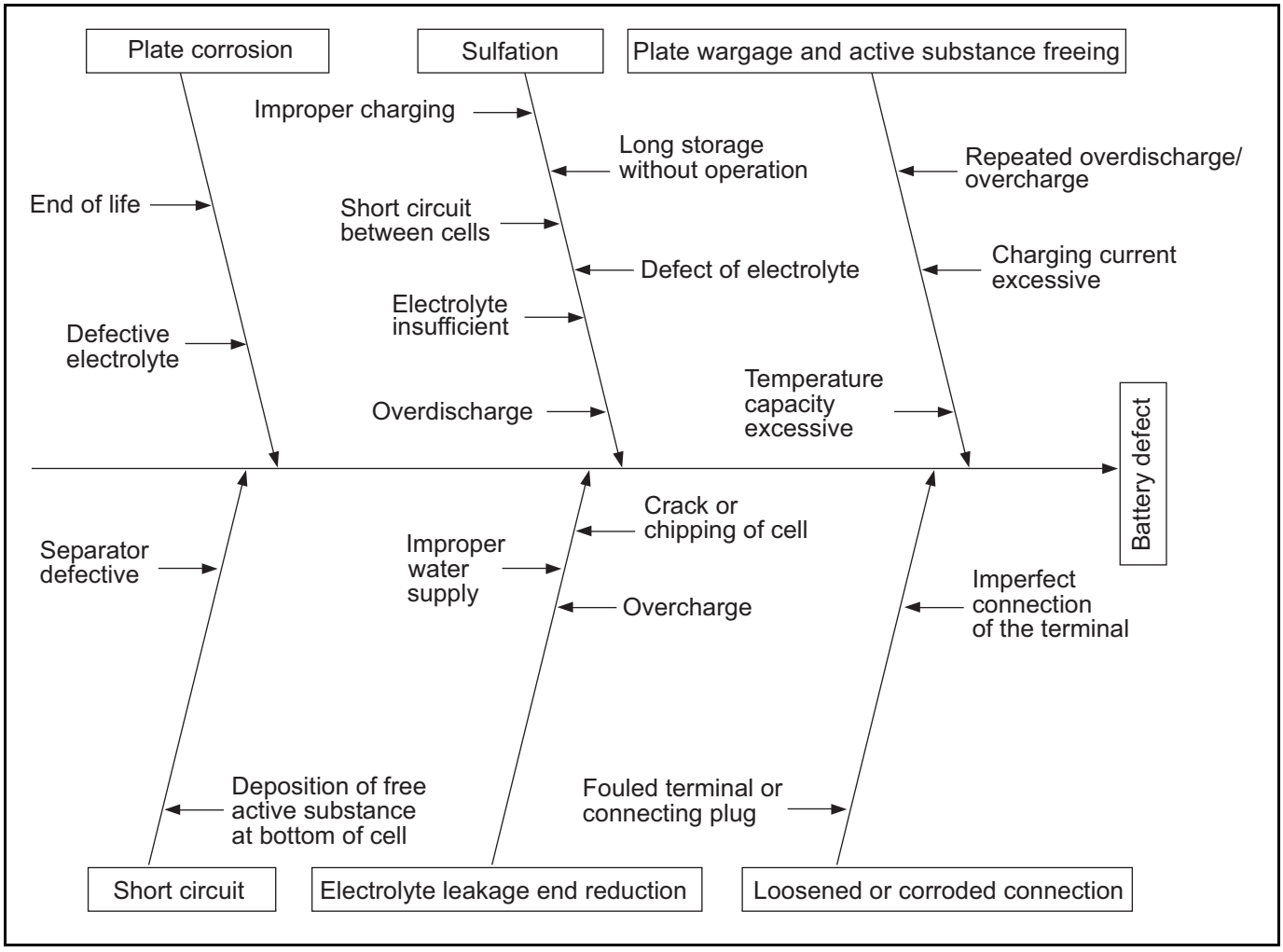

BATTERY ASSY

REMOVAL·INSTALLATION

Always remove or install the battery in no-load state (without any load on the fork).

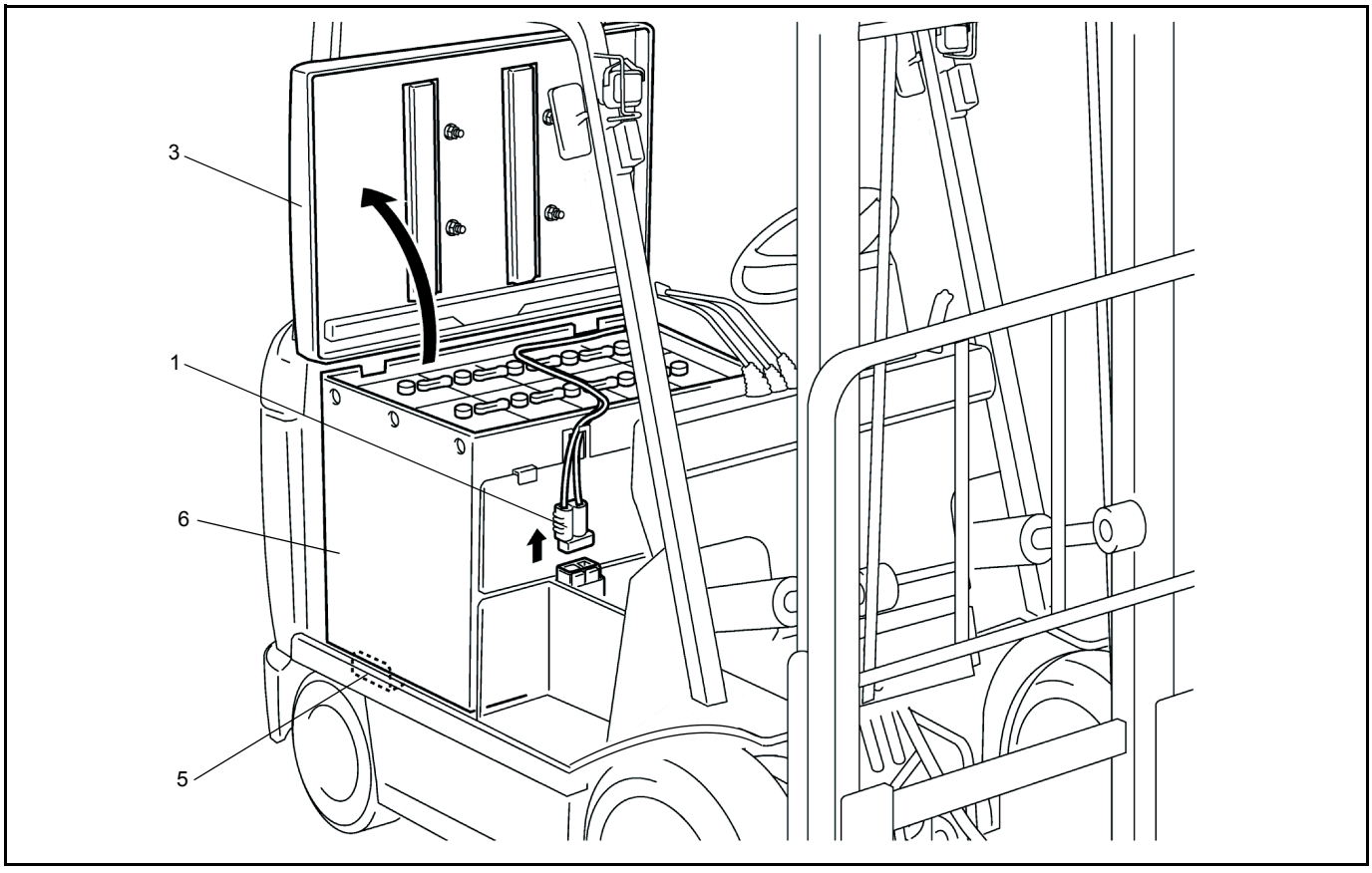

Removal Procedure

1 Disconnect the battery plug.

2 Slide the operator's seat to the front most position, and lift up the armrest. (Mini lever/Joystick lever)

3 Open the battery hood.

4 Remove the rear toe board.

5 Loosen battery stoppers (RH and LH) and the fixing bolts.

6 Remove the battery ASSY. **[Point 1]**

Installation Procedure

The installation procedure is the reverse of the removal procedure.

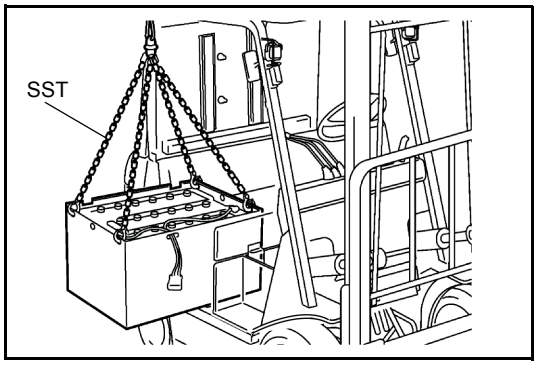

Point Operation

[Point 1]

Removal Installation:
SST 25009-13201-71

https://truckmanualshub.com/

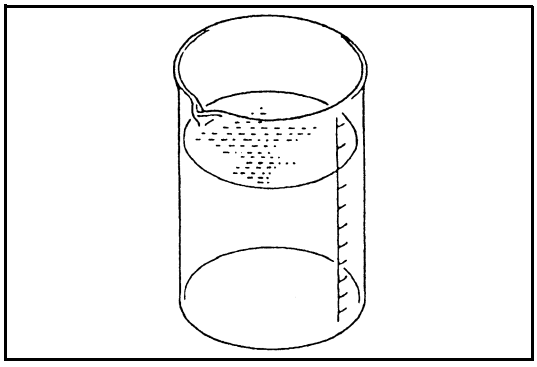

INSPECTION

1. Electrolyte inspection
   Battery electrolyte is normal when it is transparent. Check turbidity when inspecting the specific gravity. If it cannot be checked clearly, put the electrolyte in a beaker for inspection.

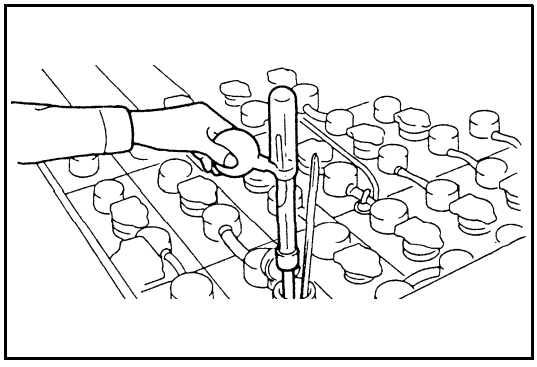

2. Specific gravity inspection
   Use a hydrometer and measure the specific gravity of the electrolyte.
   Specific gravity upon full charge:
   ..... 1.280 [20°C (68°F)]
   Specific gravity upon end of discharge:
   ..... 1.150 [20°C (68°F)]
   The specific gravity of the electrolyte at 20°C (68°F) is used as the standard.

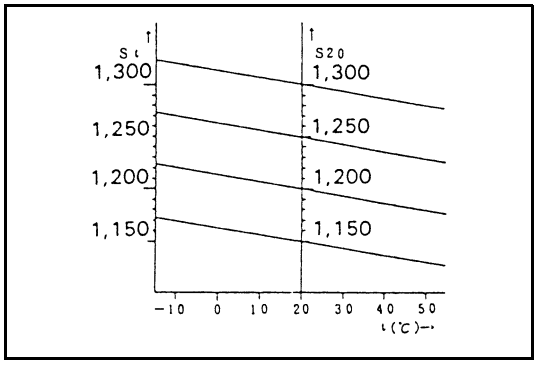

Equation for conversion
S_{20} = St+0.0007 (t-20)
S_{20} = Specific gravity at 20°C
St:Specific gravity measured at t°C
t:Electrolyte temperature upon measurement (°C)

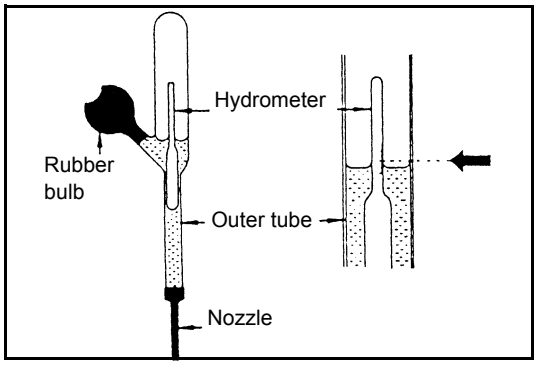

* How to use the hydrometer

(1) Insert the nozzle of the hydrometer into the electrolyte port and allow the electrolyte to be sucked into its outer tube.
(2) Let the hydrometer float correctly without contact with the outer tube, top or bottom, and read the scale at the highest point of the electrolyte surface as illustrated at left when the bubbles in the electrolyte disappear.
(3) After the measurement, wash the inside and outside of the hydrometer well with clear water and store it after wiping water off with clean cloth.

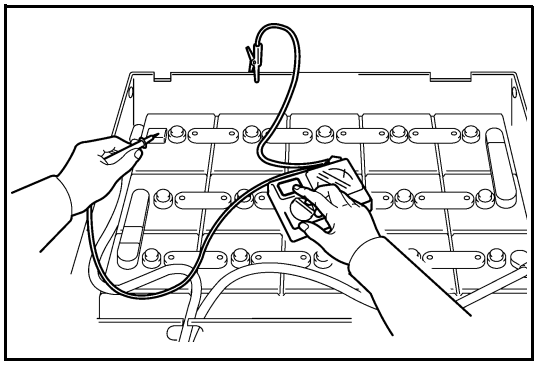

3. Insulation resistance inspection
   Use an insulation resistance meter (megohmmeter) and measure the resistance between the battery and battery case.
   Insulation resistance:1 MΩ or more

Note:
- **When the insulation resistance is less than 1 MΩ, wash the battery with water after removing it from the vehicle.**
- **Fully dry the washed battery and measure the insulation resistance again. Install the battery on the vehicle after confirming that the insulation resistance is 1 MΩ or more.**

* Battery control table
Prepare a control table for each battery to record and maintain the inspection results.

Inspection date and time	Inspected cell No.	Specific gravity	Electrolyte temperature	Added water quantity	Remarks	Inspector

https://truckmanualshub.com/

BATTERY STOPPER

The battery stopper adjusts the gap between the battery and battery compartment.

Adjust A and B so that total gap between the battery and battery compartment is under 12.7 mm (1/2 in).

This is the UL Standards requirement.

Install spacer plate if B is larger than 12.7 mm (1/2 in).

Spacer plate has two sets of installation holes.

Change the installion hole and bolt depend on wether B is larger than 30 mm (1.2 in).

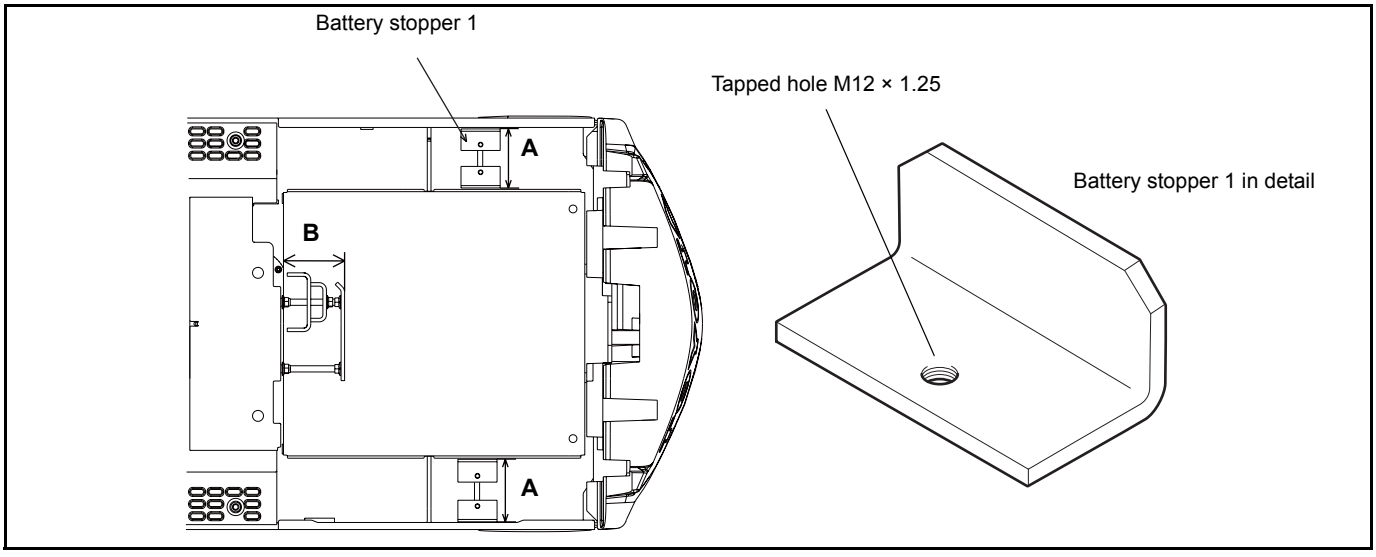

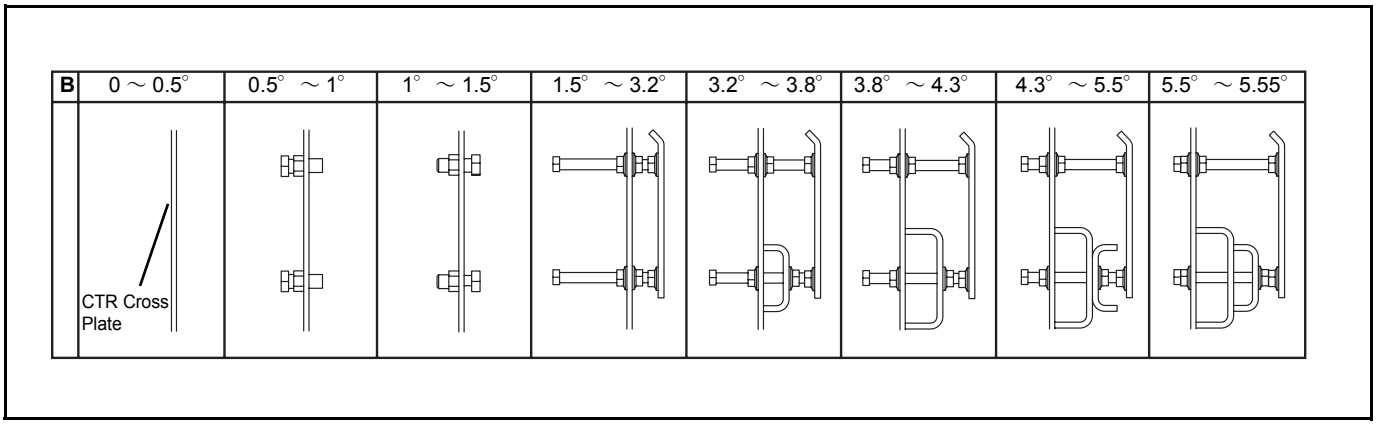

https://truckmanualshub.com/

MOTOR

Page

DRIVE MOTOR 5-2
GENERAL 5-2
SPECIFICATIONS 5-2
COMPONENTS 5-3
REMOVAL·INSTALLATION 5-4
DISASSEMBLY·INSPECTION·REASSEMBLY 5-6
PUMP MOTOR 5-9
GENERAL 5-9
SPECIFICATIONS 5-10
COMPONENTS 5-11
REMOVAL·INSTALLATION 5-12
DISASSEMBLY·INSPECTION·REASSEMBLY 5-13

https://truckmanualshub.com/

DRIVE MOTOR

GENERAL

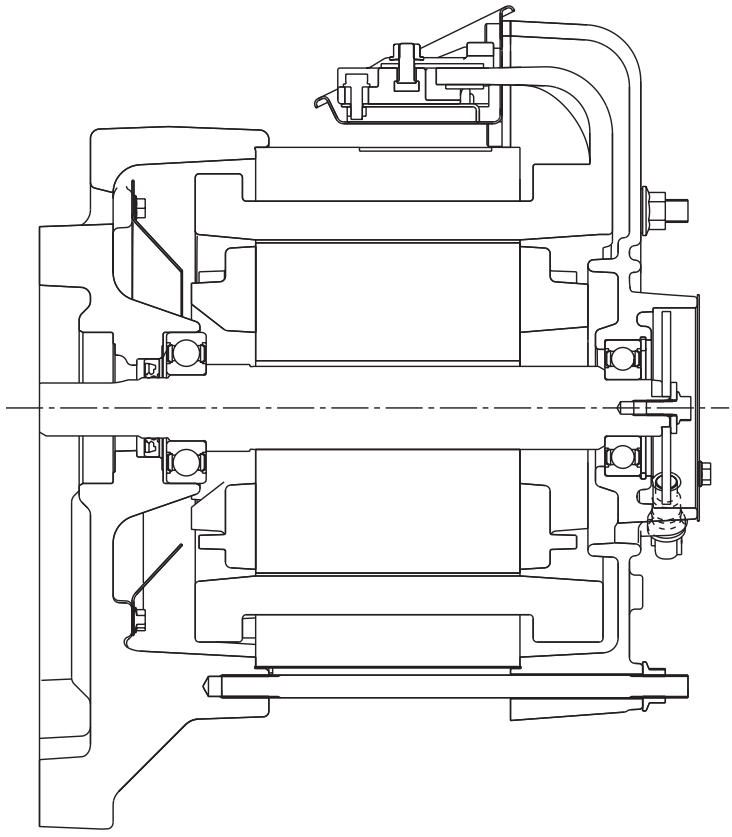

SPECIFICATIONS

Item \ Vehicle model	8FBCU20·25 8FBCHU20	8FBCU28·30·32
Type	Three phase AC	Three phase AC
Nominal voltage V	21/28	22/29
Rated output kW	10.8/14.8	13.2/18.0
Dimensions mm (outside diameter × length) (in)	ϕ276 × 275 (10.87 × 10.83)	ϕ276 × 315 (10.87 × 12.40)
Weight kg (lb)	127 (280)	145 (320)
Insulation class	F	F

COMPONENTS

1401

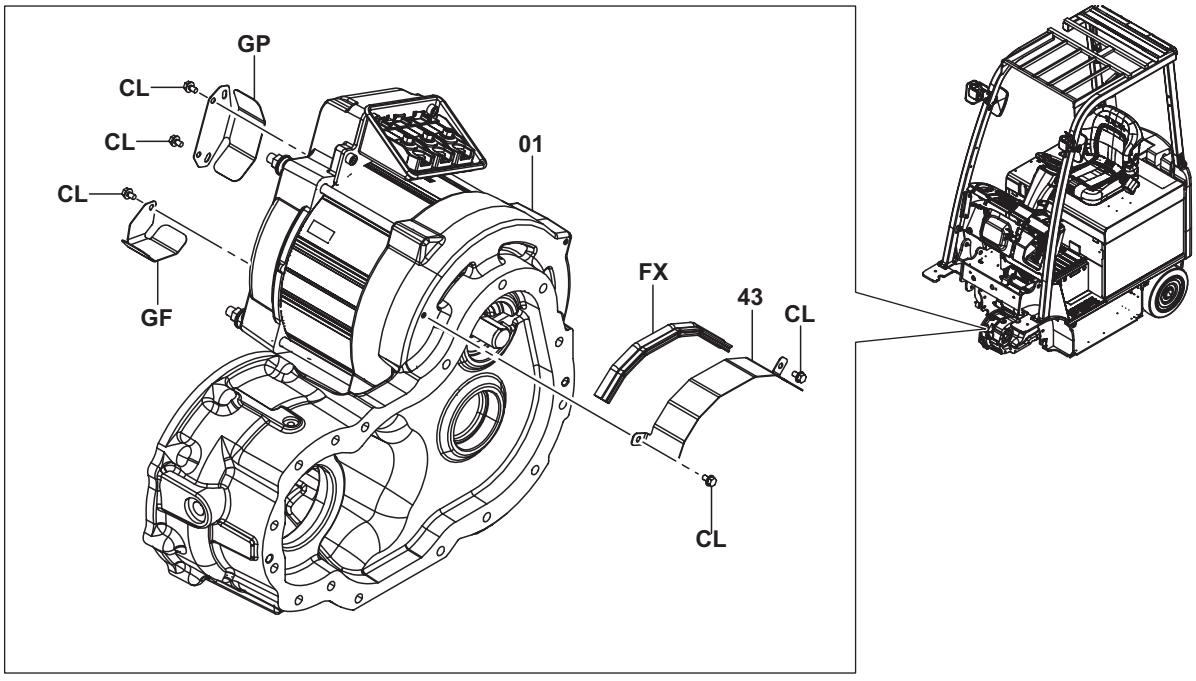

1401-192

1401

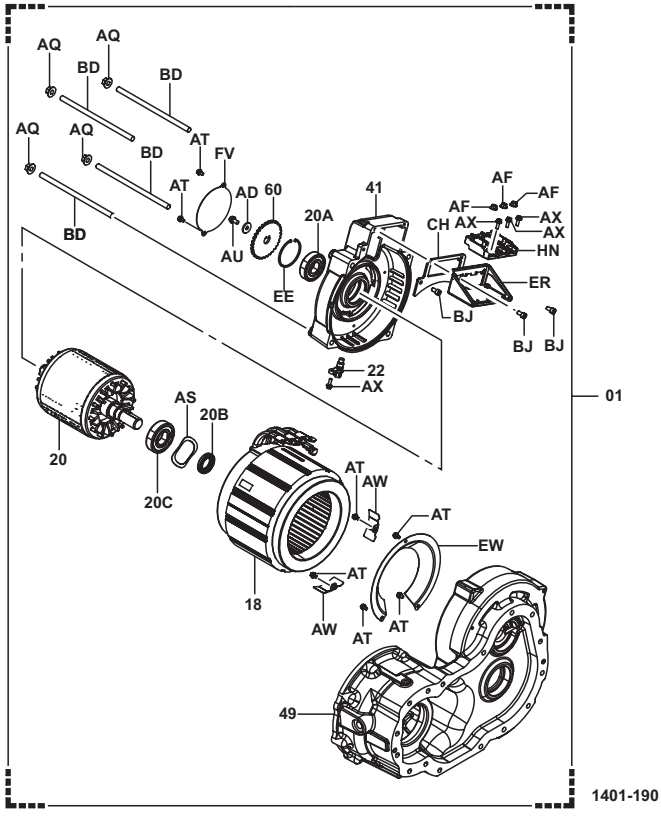

1401-190

https://truckmanualshub.com/

REMOVAL·INSTALLATION

T = N·m (kgf-cm) [ft-lbf]

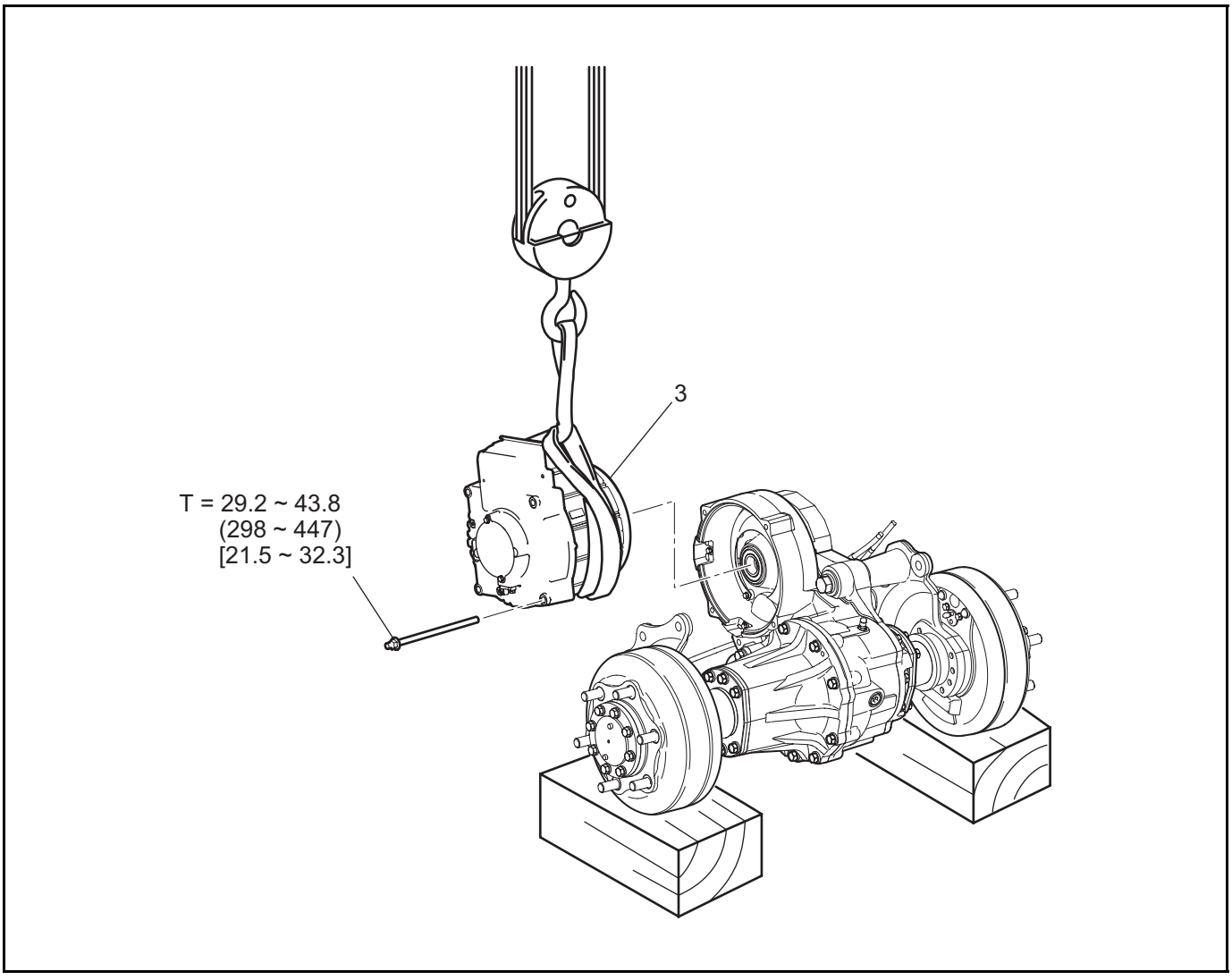

Removal Procedure

1 Remove the front axle ASSY W/drive motor ASSY. (See page 6-5)
2 Put match marks between the drive unit case and stator ASSY. **[Point 1]**
3 Loosen the through bolt and remove the drive motor. **[Point 2]**

Installation Procedure

The installation procedure is the reverse of the removal procedure.

https://truckmanualshub.com/

Thank you very much for your reading.

Please Click Here Then Get More Information.