https://truckmanualshub.com/

PARTS CATALOG

25V4

SERIAL No. WQ010001 - WQ029999

https://truckmanualshub.com/

[Memo]

https://truckmanualshub.com/

MODEL : 25V4

SERIAL NO. : WQ010001 - WQ029999

CONTENTS

DESCRIPTION	SHEET No.	PAGE
0 RUNNING STORES		
RUNNING STORES	0-0	1
1 LOWER MACHINE		
LOWER MACHINE ASS'Y	1-1	4
CRAWLER SHOE ASS'Y	1-2	7
CRAWLER SHOE ADJ. DEVICE	1-3	9
FRONT IDLER ASS'Y	1-4	11
LOWER ROLLER ASS'Y	1-5	13
UPPER ROLLER ASS'Y	1-6	15
LOWER TRAVEL PIPING ASS'Y	1-7	17
2 TURNTABLE		
TURNTABLE & SWING BEARING ASS'Y	2-1	19
3 SWING DRIVE DEVICE		
SWING DRIVE DEVICE	3-1	21
4 HYDRAULIC PIPING		
RETURN & SUCTION PIPING ASS'Y	4-1	23
SWING & TRAVEL PIPING ASS'Y	4-2	25
PUMP DISCHARGE & BOOM SWING PIPING ASS'Y	4-3	27
CONTROL PIPING ASS'Y	4-4	29
CONTROL PIPING ASS'Y (A-D & A, B, G CHANGE)	4-4[A]	32
CONTROL PIPING ASS'Y (FOR A, F CHANGE)	4-4[B]	37
5 HYDRAULIC INSTRUMENT		
TRAVEL MOTOR ASS'Y	5-1	40
SWING MOTOR ASS'Y	5-2	44
ROTARY JOINT ASS'Y	5-3	47
CONTROL VALVE ASS'Y	5-4	49
REMOTE CONTROL VALVE ASS'Y	5-5	53
REMOTE CONTROL VALVE ASS'Y	5-5A	55
HYDRAULIC OIL TANK ASS'Y	5-6	57
OIL PUMP ASS'Y	5-7	59
BOOM CYLINDER ASS'Y	5-8	61
ARM CYLINDER ASS'Y	5-9	63

https://truckmanualshub.com/

MODEL : 25V4

SERIAL NO. : WQ010001 - WQ029999

CONTENTS

DESCRIPTION	SHEET No.	PAGE
BUCKET CYLINDER ASS'Y	5-10	65
BOOM SWING CYLINDER ASS'Y	5-11	67
BLADE CYLINDER ASS'Y	5-12	69
PILOT VALVE ASS'Y(TRAVEL)	5-13	71
PILOT VALVE ASS'Y	5-14	73
MULTIPLE VALVE ASS'Y (FOR A-D CHANGE)	5-15	75
MULTIPLE VALVE ASS'Y (FOR A·B·G CHANGE)	5-15[A]	77
MULTIPLE VALVE ASS'Y (FOR A, F CHANGE)	5-15[B]	79
6 OPERATING CONTROLS		
TRAVEL LEVER ASS'Y	6-1	81
CONTROL LEVER ASS'Y	6-2	83
BLADE & BOOM SWING CONTROL ASS'Y	6-3	86
ENGINE CONTROL ASS'Y	6-4	89
ENGINE CONTROL ASS'Y	6-4[A]	91
7 POWER UNIT		
ENGINE & ACCESSOORIES	7-1	93
ENGINE & ACCESSOORIES	7-1[A]	96
AIR CLEANER & MUFFLER ASS'Y	7-2	100
AIR CLEANER & MUFFLER ASS'Y	7-2[A]	103
OIL PUMP DRIVE DEVICE	7-3	105
OIL PUMP DRIVE DEVICE	7-3[A]	107
FUEL TANK & PIPING ASS'Y	7-4	109
FUEL TANK & PIPING ASS'Y	7-4[A]	112
8 CAB & RELATED PARTS		
COVER ASS'Y (1)	8-1	116
COVER ASS'Y (2)	8-2	119
NOISE ABSORBENT ASS'Y	8-3	122
CANOPY ASS'Y (FOR TOPS/ROPS)	8-4	125
CANOPY ASS'Y	8-4[A]	127
OPERATOR SEAT & MAT ASS'Y	8-5	129
COUNTER WEIGHT ASS'Y	8-6	131
NAME PLATE ASS'Y (FOR JAPANESE)	8-7	133
NAME PLATE ASS'Y (FOR ENGLISH)	8-7[A]	135
9 ELECTRIC SYSTEM		

https://truckmanualshub.com/

MODEL : 25V4

SERIAL NO. : WQ010001 - WQ029999

CONTENTS

DESCRIPTION	SHEET No.	PAGE
ELECTRIC SYSTEM	9-1	137
ELECTRIC SYSTEM	9-1[A]	140
INSTRUMENT PANEL ASS'Y	9-2	144
10 TOOLS & ACCESSORIES		
TOOLS & ACCESSORIES	10-1	148
11 HOE ATTACHMENT		
HOE ATTACHMENT ASS'Y	11-1	151
BOOM SWING ASS'Y	11-2	153
HOE BUCKET ASS'Y	11-3	155
HOE ATTACHMENT PIPING ASS'Y	11-4	157
12 BLADE ATTACHMENT		
BLADE ATTACHMENT ASS'Y	12-1	159
BLADE PIPING ASS'Y	12-2	161
15 OPTION SPECIFICATION		
FIRST SPARE PIPING ASS'Y	15-1	163
SECOND SPARE PIPING ASS'Y	15-2	166
THIRD SPARE PIPING ASS'Y	15-3	169
ACCUMULATOR ASS'Y	15-4	171
OPERATOR ROOM ASS'Y (1)	15-5	173
OPERATOR ROOM ASS'Y (2)	15-6	175
OPERATOR ROOM ASS'Y (3)	15-7	178
OPERATOR ROOM ASS'Y (4)	15-8	181
CAR HEATER ASS'Y	15-9	184
CAR HEATER ASS'Y	15-9[A]	187
NAME PLATE ASS'Y (FOR JAPANESE)	15-10	189
NAME PLATE ASS'Y(FOR ENGLISH)	15-10[A]	191
MIRROR ASS'Y	15-11	193
TRAVEL ALARM DEVICE	15-12	195
IMMOBILIZER ASS'Y	15-13	197
LIGHT ASS'Y	15-14	199

https://truckmanualshub.com/

LIST OF CONSUMABLES

消耗品リスト

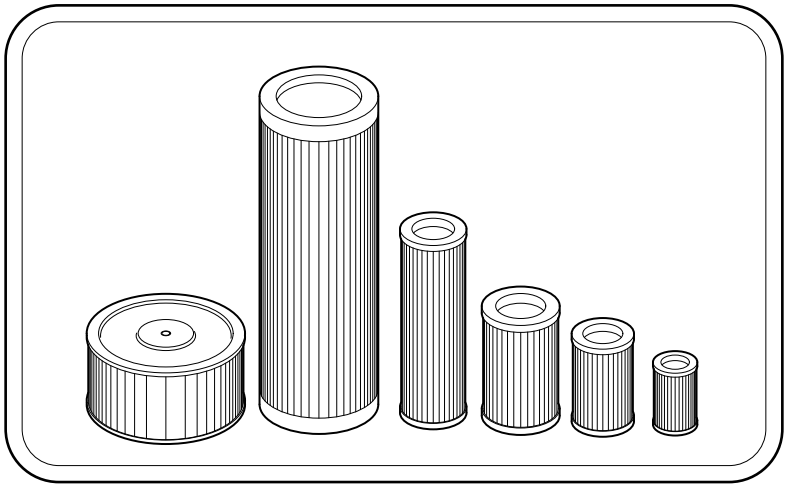

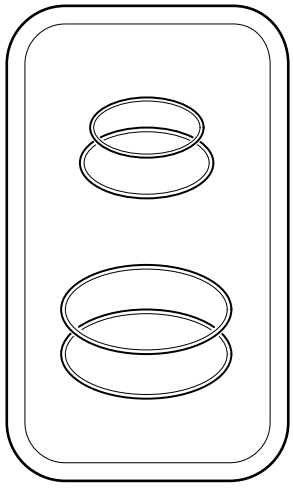

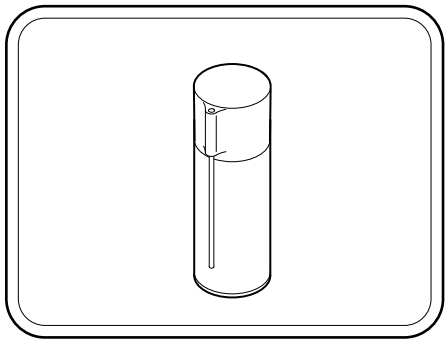

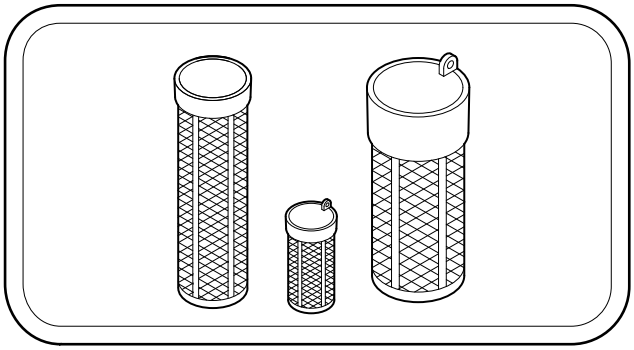

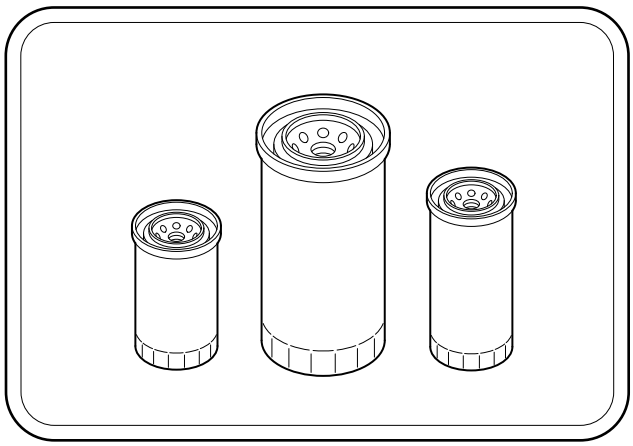

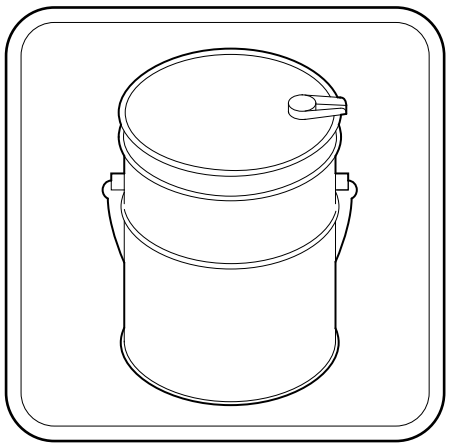

SHALL-000000-1

https://truckmanualshub.com/

KEY No.	SUP.	PART No.	DESCRIPTION	Q'TY	CHAN.	SERIAL No.	REMARKS
			RUNNING STORES LIST				
1		0753 265 UA	Vaive, Check (Grease Up)	1		WQ010001-	Sh. No. 1-3
2		0755 179 UA	Strainer, Suction	1		WQ010001-	Sh. No. 5-6
3		0759 144 01	Cartridge, Return Filter	1		WQ010001-	Sh. No. 5-6
● 4		0775 551 88	Hose, Radiator	1		WQ010001-WQ020000	Sh. No. 7-1
●		0775 552 00	Hose, Radiator	1		WQ020001-	Sh. No. 7-1[A]
● 5		0775 551 89	Hose, Radiator	1		WQ010001-WQ020000	Sh. No. 7-1
●		0775 552 04	Hose, Radiator	1		WQ020001-	Sh. No. 7-1[A]
6		0775 551 85	Hose, Radiator	1		WQ010001-	Sh. No. 7-1
7		0745 266 08	Element, Air Cleaner	1		WQ010001-	Sh. No. 7-2
8		0745 266 09	Element, Air Cleaner(Inner)	1		WQ010001-	Sh. No. 7-2
9		0857 914 11	Element, Water Sedimenter	1		WQ010001-	Sh. No. 7-4
10		0729 910 73	Cap, Fuel	1		WQ010001-	Sh. No. 7-4
11		0858 306 03	Switch Ass'y, Starter	1		WQ010001-	Sh. No. 9-2
12		0820 215 07	Relay	3		WQ010001-	Sh. No. 9-2
13		D013 360 00	Pin, Bucket	2		WQ010001-	Sh. No. 11-1
14		4511 501 07	Ring, O (For Bucket)	4		WQ010001-	Sh. No. 11-1
15		0650 002 04	Tooth, Bucket	AR		WQ010001-	18S
16		0650 003 03	Pin, Lock	AR		WQ010001-	18-20M-PN
17		0650 004 02	Pin, Rubber	AR		WQ010001-	18-20M-LK
18		4123 040 00	Coutter, Side (R.H.)	1		WQ010001-	Sh. No. 11-3
19		4123 041 00	Coutter, Side (L.H.)	1		WQ010001-	Sh. No. 11-3
20		0555 140 40	Bolt, Treatment	6		WQ010001-	Sh. No. 11-3
21		0585 140 00	Nut, Treatment	6		WQ010001-	Sh. No. 11-3
22		D006 051 00	Washer, Treatment	6		WQ010001-	Sh. No. 11-3
			SEAL KIT				
23		0713 429 91	Rotary Joint	1		WQ010001-	Sh. No. 5-3
24		0782 465 91	Boom Cylinder (Head Side)	1		WQ010001-	Sh. No. 5-8
25		0782 368 91	Arm Cylinder (Head Side)	1		WQ010001-	Sh. No. 5-9
26		0782 376 91	Bucket Cylinder (Head Side)	1		WQ010001-	Sh. No. 5-10
27		0782 445 91	Boom Swing Cylinder (Head Side)	1		WQ010001-	Sh. No. 5-11
28		0782 397 91	Blade Cylinder (Head Side)	1		WQ010001-	Sh. No. 5-12
			ENGINE PARTS (S773L-C)				
● 29		E3607 20060	Element, Fuel Filter	1		WQ010001-WQ020000	Sh. No. 7-4
● 30		E1405 17020	Filter, Oil	1		WQ010001-WQ020000	Engine P/C
● 31		E1305 06240	Pump, Fuel	1		WQ010001-WQ020000	Sh. No. 7-4
● 32		E1853 56010	Relay, Safety	1		WQ010001-WQ020000	Sh. No. 9-1
● 33		E3858 71610	Timer	1		WQ010001-WQ020000	Engine P/C
● 34		E1852 06480	Relay, Stater	1		WQ010001-WQ020000	Sh. No. 9-1
● 35		E1852 06410	Relay, Glow	1		WQ010001-WQ020000	Sh. No. 9-1
● 36		E0801 09108	Belt, V	1		WQ010001-WQ020000	Engine P/C
● 37		E1314 16150	Nozzle Ass'y (For Injection Pump)	1		WQ010001-WQ020000	Engine P/C
● 38		E1452 06061	Thermostat	1		WQ010001-WQ020000	Engine P/C
● 39		E1852 06332	Solenoid, Stop	1		WQ010001-WQ020000	Engine P/C
● 40		E1852 46330	Pressure Unit, Oil	1		WQ010001-WQ020000	Engine P/C
●			ENGINE PARTS (D1305-E4B)				
● 41		K16414 32434	Cartridge, Oil Filter	1		WQ020001-	Sh. No. 7-1[A]
● 42		KHH160 32093	Cartridge, Oil Filter	1		WQ020001-	
● 43		K15221 43170	Cartridge, Fuel Filter	1		WQ020001-	Sh. No. 7-4[A]
● 44		KR1401 51352	Pump, Fuel	1		WQ020001-	Sh. No. 7-4[A]
● 45		K15694 65992	Timer Relay, Glow	1		WQ020000-	Sh. No. 9-1[A]
● 46		K1K574 60221	Relay, Stater	1		WQ020001-	Sh. No. 9-1[A]

https://truckmanualshub.com/

	KEY No.	SUP.	PART No.	DESCRIPTION	Q'TY	CHAN.	SERIAL No.	REMARKS
●	47		K16282 97013	Belt, V	1		WQ020001-	
●	48		K15321 73016	Thermostat	1		WQ020001-	
●	49		K17208 60016	Solenoid, Stop	1		WQ020001-	
				＊＊＊＊＊				
●	50		5988 009 00	＊＊＊＊＊	1		WQ010001-	
●	51		5988 004 06	＊＊＊＊＊	1		WQ010001-	
●	51-1		5988 004 09	＊＊＊＊＊	1		WQ010001-	
●	52		5988 004 32	＊＊＊＊＊	1		WQ010001-	
●	52-1		5988 004 33	＊＊＊＊＊	1		WQ010001-	
●	53		ZG10100	＊＊＊＊＊	1		WQ010001-	
●	54		5988 022 01	＊＊＊＊＊	1		WQ010001-	
●	55		ZG00351	＊＊＊＊＊	1		WQ010001-	
●	55-1		ZG00352	＊＊＊＊＊	1		WQ010001-	
●	55-2		ZG00353	＊＊＊＊＊	1		WQ010001-	

0

https://truckmanualshub.com/

[Memo]

https://truckmanualshub.com/

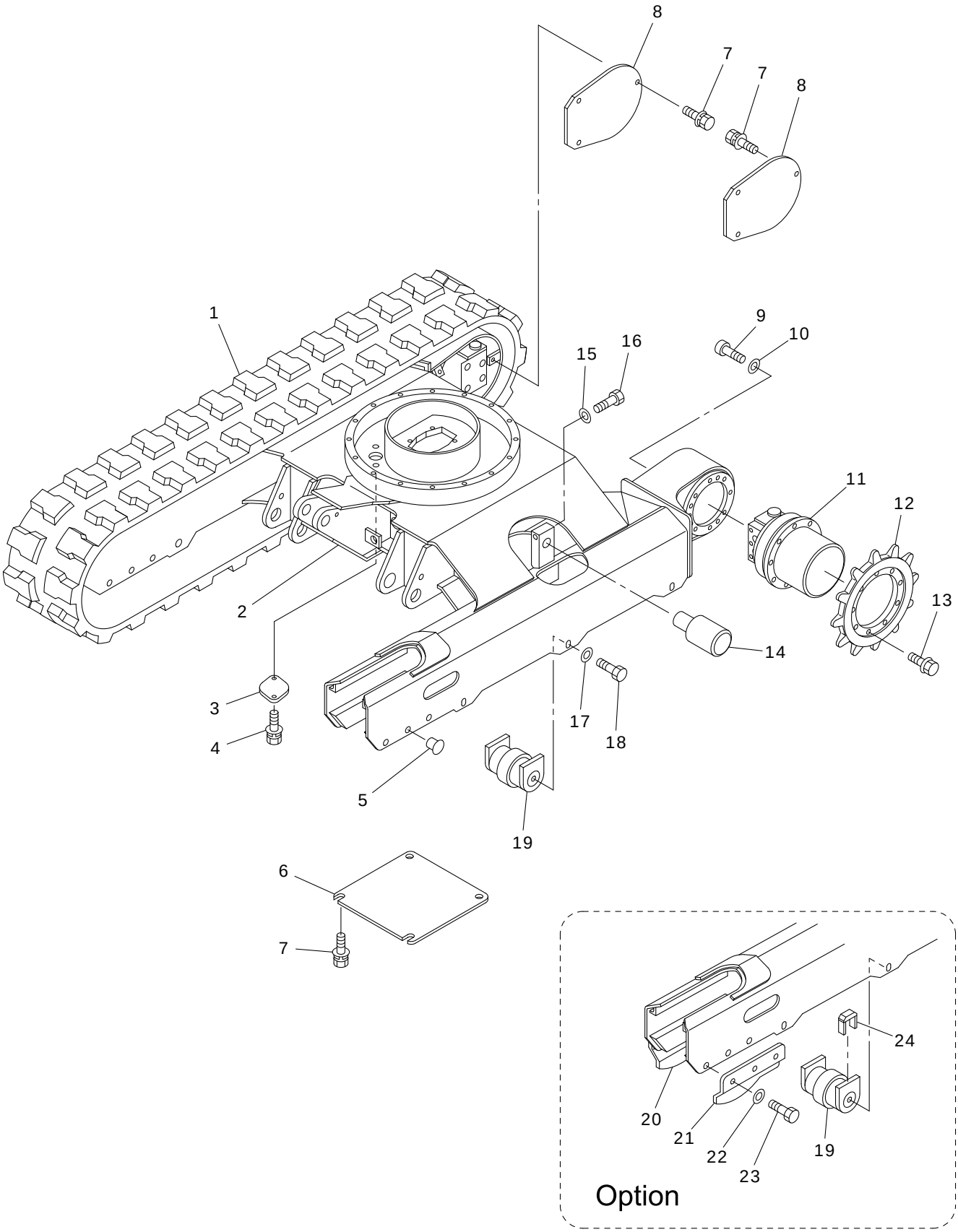

25V4-010100-1

IHI

LOWER MACHINE ASS'Y

MODEL 25V4

SHEET No 1-1

https://truckmanualshub.com/

KEY No.	SUP.	PART No.	DESCRIPTION	Q'TY	CHAN.	SERIAL No.	REMARKS
0	×	**** *** **	Lower Machine Ass'y	1		WQ010001-	
1		0654 102 UA	* Shoe, Rubber Crawler (250W)	2		WQ010001-	STD
1-1	#	0654 120 UA	* Shoe Ass'y, Crawler (Steel)	2		WQ010001-	Sh. No. 1-2
2	△	D200 195 00	* Frame, Lower	1		WQ010001-	
3		4460 756 00	* Cover	1		WQ010001-	
4		0517 080 12	* Bolt, Treatment (W/L.W, F.W)	2		WQ010001-	M8X12
5		0690 201 09	* Plug	12		WQ010001-	
6		4461 717 00	* Cover, Under	1		WQ010001-	
7		0518 100 20	* Bolt, Treatment (W/L.W, F.W)	10		WQ010001-	M10X20 P=1.25
8		D458 194 00	* Cover	2		WQ010001-	
9		0562 100 30	* Bolt, Socket Head	22		WQ010001-	M10X30
10		0595 100 00	* Washer, Treatment	22		WQ010001-	M10
11	#	0781 375 UA	* Motor Ass'y, Travel	2		WQ010001-	Sh. No. 5-1
12		D234 035 00	* Sprocket, Drive	2		WQ010001-	
13		0457 100 30	* Bolt, Treatment (W/Flange)	22		WQ010001-	M10X30
14	#	0651 911 UA	* Roller Ass'y, Upper	2		WQ010001-	Sh. No. 1-6
15		0595 160 00	* Washer, Treatment	2		WQ010001-	M16
16		0555 160 65	* Bolt, Treatment	2		WQ010001-	M16X65
17		0595 160 00	* Washer, Treatment	12		WQ010001-	M16
18		0555 160 30	* Bolt, Treatment	12		WQ010001-	M16X30
19	#	F300 223 00	* Roller Ass'y, Lower	6		WQ010001-	Sh. No. 1-5
20		4475 587 00	* Guide, Shoe (R.H.)	2		WQ010001-	
21		4475 586 00	* Guide, Shoe (L.H.)	2		WQ010001-	
22		0595 120 00	* Washer, Treatment	12		WQ010001-	M12
23		0555 120 35	* Bolt, Treatment	12		WQ010001-	M12X35
24		D007 126 00	* Shim	12		WQ010001-	t=9.0

1

https://truckmanualshub.com/

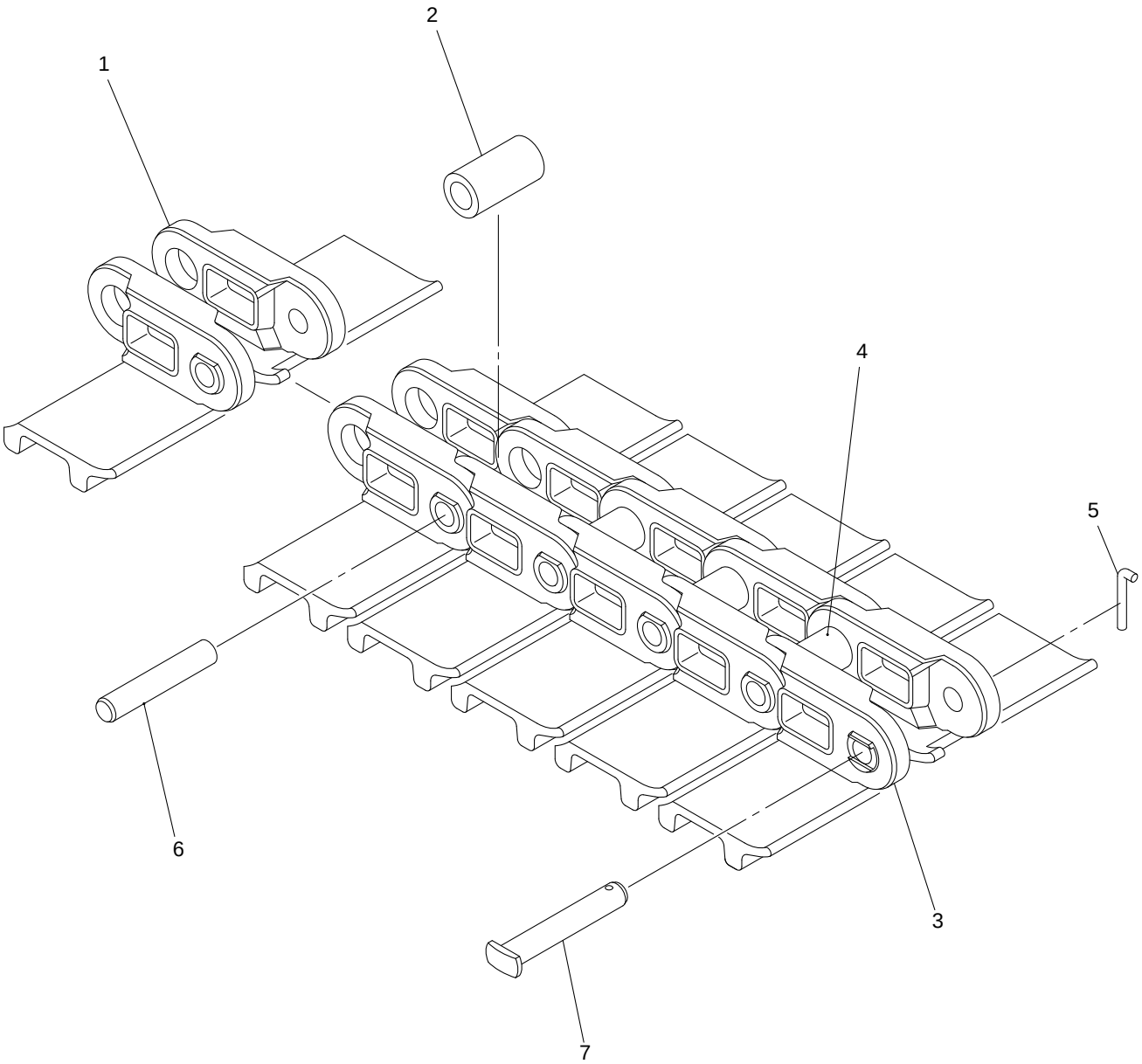

SHALL-010200-1

IHI

CRAWLER SHOE ASS'Y

MODEL 25V4

SHEET No 1-2

https://truckmanualshub.com/

KEY No.	SUP.	PART No.	DESCRIPTION	Q'TY	CHAN.	SERIAL No.	REMARKS
0		0654 120 UA	Shoe Ass'y, Crawler	2		WQ010001-	L=250mm
1		0654 120 91	* Complete, Track Shoe	39		WQ010001-	L=250mm
2		0653 934 02	** Bushing	1		WQ010001-	
3		0654 120 92	* Complete, Master Shoe	1		WQ010001-	L=250mm
4		0653 934 02	** Bushing	1		WQ010001-	
5		0653 934 05	* Pin, Lock	1		WQ010001-	
6		0653 934 03	* Pin, Track	39		WQ010001-	
7		0653 934 04	* Pin, Master	1		WQ010001-	

1

https://truckmanualshub.com/

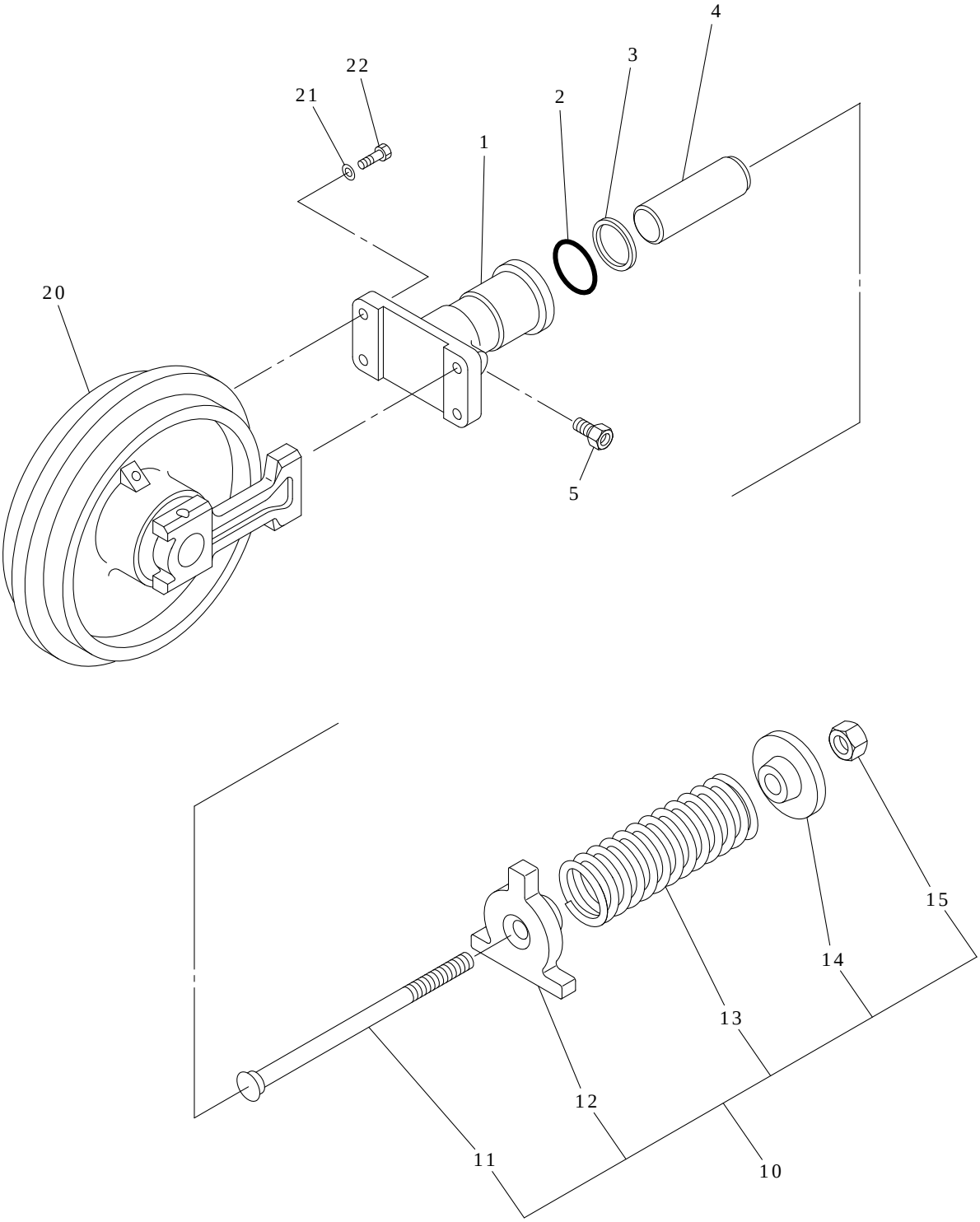

SHALL-010300-1

IHI

CRAWLER SHOE ADJ. DEVICE

MODEL 25V4

SHEET No 1-3

https://truckmanualshub.com/

KEY No.	SUP.	PART No.	DESCRIPTION	Q'TY	CHAN.	SERIAL No.	REMARKS
0		5301 226 98	Cylinder Ass'y, Grease	2		WQ010001-	
1		4514 545 00	* Cylinder, Grease	1		WQ010001-	
2		0760 710 42	* Ring, O	1		WQ010001-	P40-90B
3		0762 120 42	* Ring, Back-up	1		WQ010001-	P40-T2
4		4515 508 00	* Piston	1		WQ010001-	
5		0753 265 UA	* Valve, Check	1		WQ010001-	
● 10		F300 380 01	Unit Ass'y, Spring	2		WQ010001-	
11		4004 161 00	* Bolt, Adjusting	1		WQ010001-	
12		D485 021 00	* Retainer, Spring	1		WQ010001-	
13		4170 177 00	* Spring	1		WQ010001-	
14		4485 513 00	* Retainer, Spring	1		WQ010001-	
15		0580 160 00	* Nut, Hex.	1		WQ010001-	M16
20	×	F300 360 00	Idler Ass'y, Front	2		WQ010001-	
20-1	#	F300 361 00	* Idler Ass'y, Front	1		WQ010001-	Sh. No.1-4
21		0595 100 00	* Washer, Treatment	4		WQ010001-	M10
22		0513 100 35	* Bolt, Treatment	4		WQ010001-	M10X35

1

https://truckmanualshub.com/

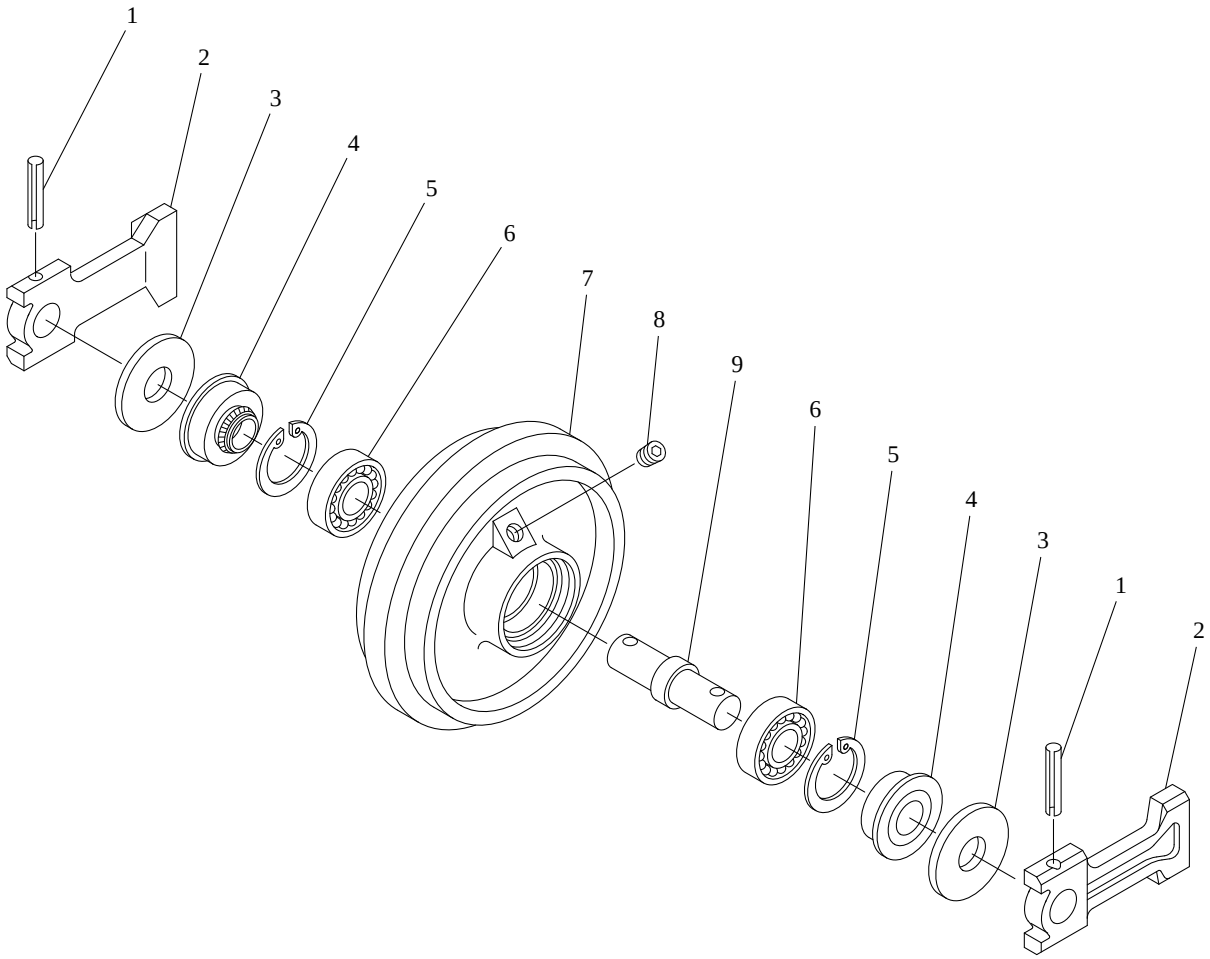

SHALL-010400-1

IHI

FRONT IDLER ASS'Y

MODEL 25V4

SHEET No 1-4

https://truckmanualshub.com/

KEY No.	SUP.	PART No.	DESCRIPTION	Q'TY	CHAN.	SERIAL No.	REMARKS
0		F300 361 01	Idler Ass'y, Front	2		WQ000001-	
1		0494 651 70	* Pin, Spring	2		WQ000001-	d=10X70
2		4420 732 00	* Block, Bearing	2		WQ000001-	
3		4006 276 00	* Washer	2		WQ000001-	
4		0761 731 40	* Seal	2		WQ000001-	
5		0493 500 80	* Ring, Snap	2		WQ000001-	d=80
6		0630 630 70	* Bearing, Ball	2		WQ000001-	#6307
7		D236 013 00	* Idler, Front	1		WQ000001-	
8		0710 201 01	* Plug	1		WQ000001-	ST-PA-1/8
9		4220 516 00	* Shaft	1		WQ000001-	

1

https://truckmanualshub.com/

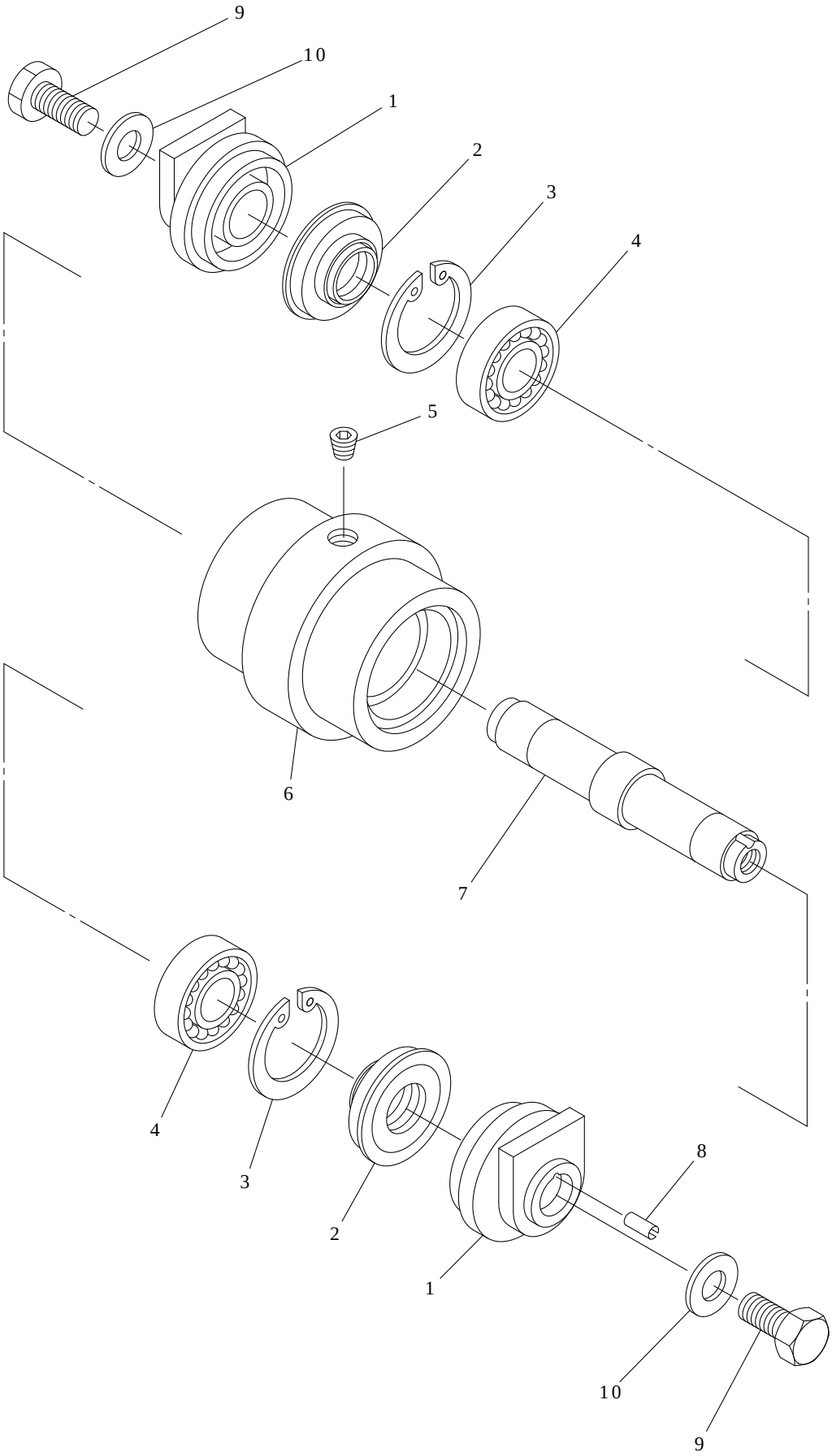

SHALL-010500-1

IHI

LOWER ROLLER ASS'Y

MODEL 25V4

SHEET No 1-5

https://truckmanualshub.com/

KEY No.	SUP.	PART No.	DESCRIPTION	Q'TY	CHAN.	SERIAL No.	REMARKS
0		F300 223 00	Roller Ass'y, Lower	6		WQ000001-	
1		4042 204 00	* Collar, Roller	2		WQ000001-	
2		0761 730 12	* Seal	2		WQ000001-	
3		0493 500 62	* Ring, Snap	2		WQ000001-	d=62
4		0630 620 60	* Bearing	2		WQ000001-	#6206
5		0710 201 01	* Plug	1		WQ000001-	ST-PA-1/8
6		D031 031 00	* Roller, Guide	1		WQ000001-	
7		4220 517 00	* Shaft	1		WQ000001-	
8		0494 608 10	* Pin, Spring	1		WQ000001-	d=5X10
9		0555 160 30	* Bolt, Treatment	2		WQ000001-	M16X30
10		0595 160 00	* Washer, Treatment	2		WQ000001-	M16

https://truckmanualshub.com/

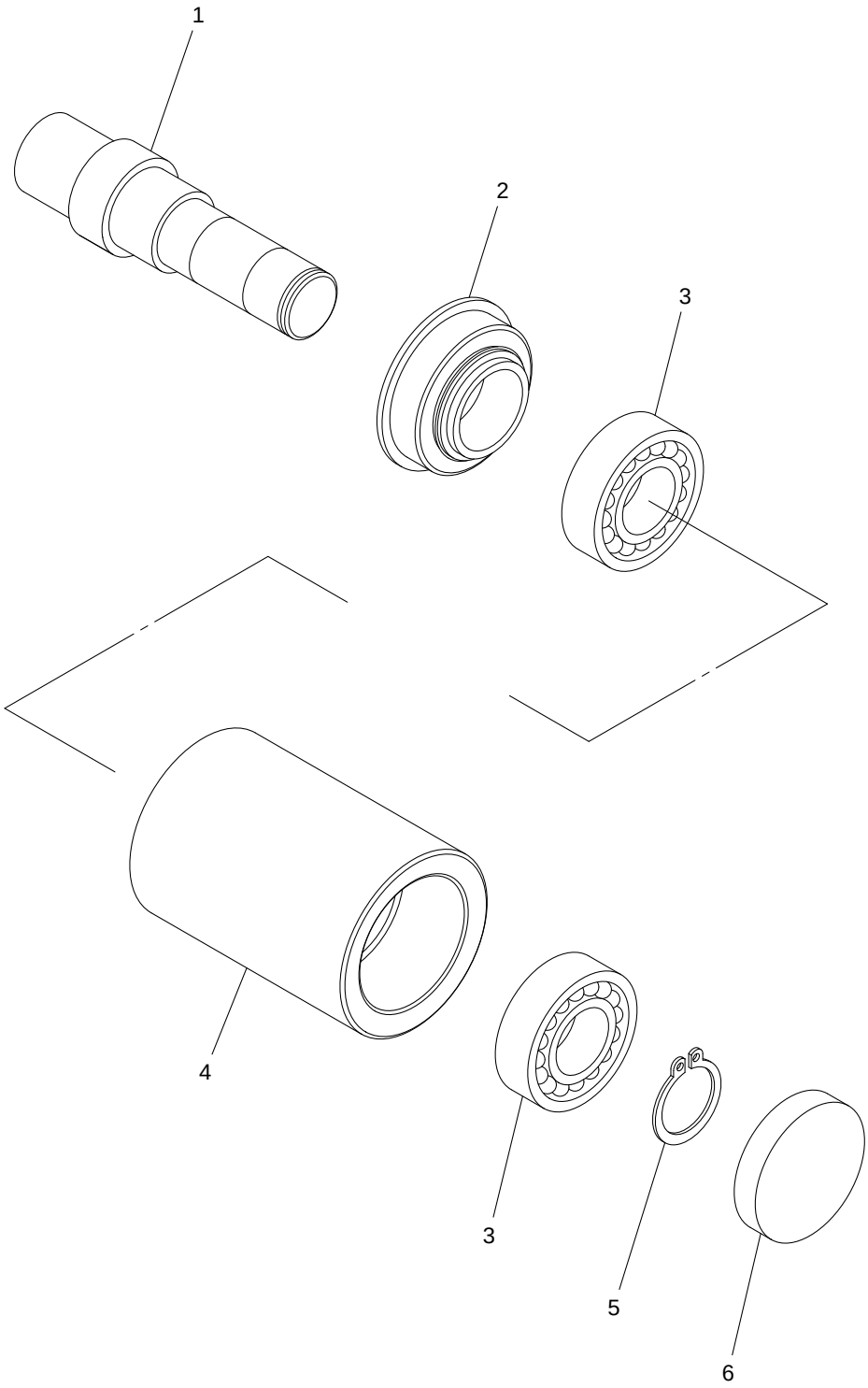

0651911UA-1

IHI

UPPER ROLLER ASS'Y

MODEL 25V4

SHEET No 1-6

https://truckmanualshub.com/

KEY No.	SUP.	PART No.	DESCRIPTION	Q'TY	CHAN.	SERIAL No.	REMARKS
0		0651 911 UA	Roller Ass'y, Upper	2		WQ010001-	
1		0651 911 02	* Shaft, Roller	1		WQ010001-	
2		0761 691 20	* Seal	1		WQ010001-	
3		0630 620 50	* Bearing	2		WQ010001-	#6205
4		0651 911 01	* Roller	1		WQ010001-	
5		0493 510 25	* Ring, Snap	1		WQ010001-	d=25
6		0651 911 04	* Cap	1		WQ010001-	

1

https://truckmanualshub.com/

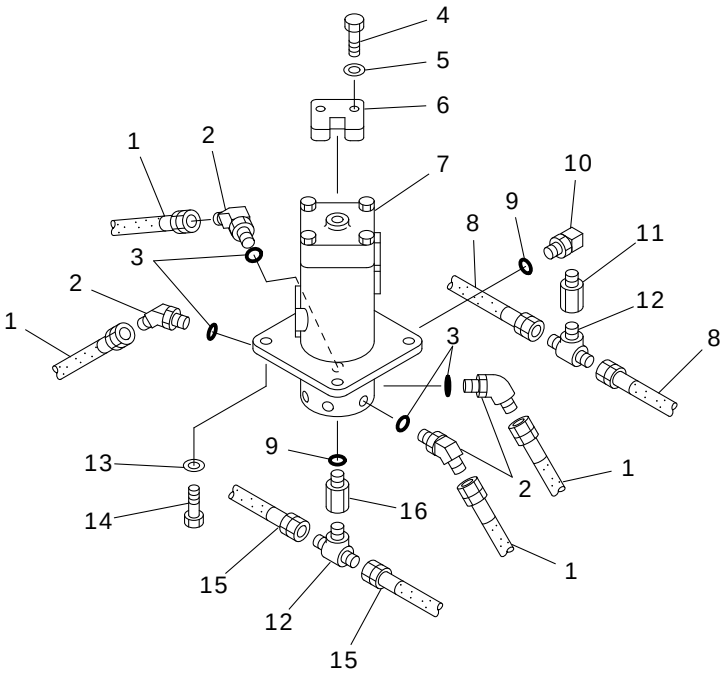

"A" DETAIL

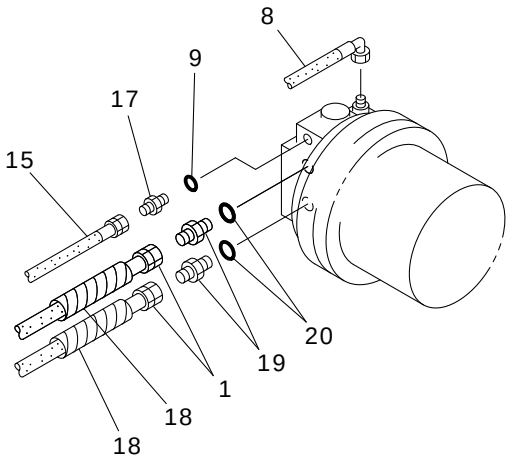

"B" DETAIL

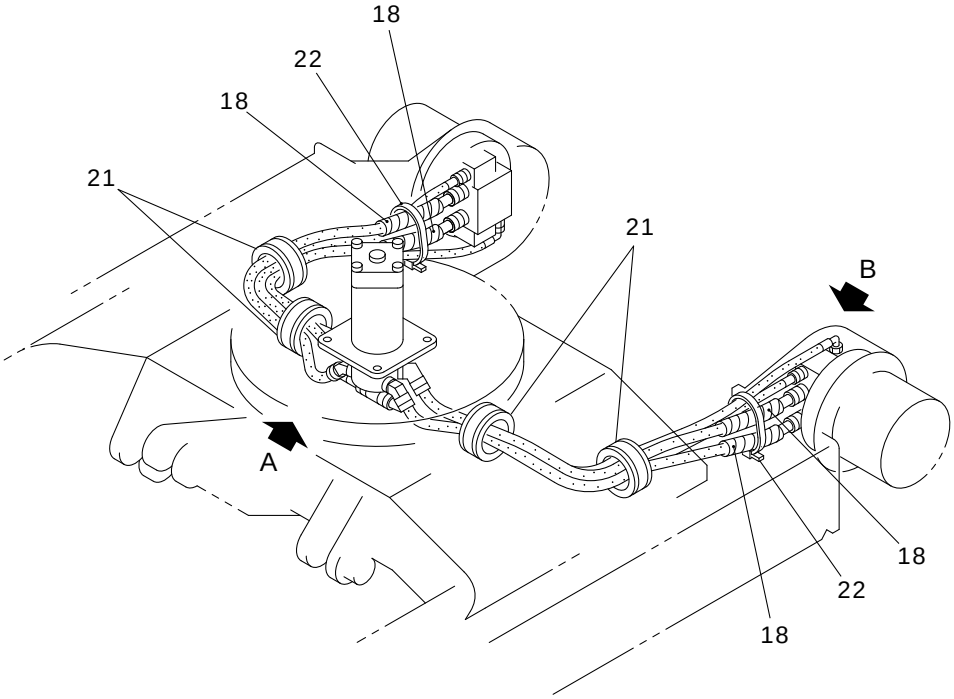

25VX3-010600-1

https://truckmanualshub.com/

KEY No.	SUP.	PART No.	DESCRIPTION	Q'TY	CHAN.	SERIAL No.	REMARKS
● 0	×	F342 789 00	Piping Ass'y, Lower Travel	1		WQ010001-	
1		4070 002 04	* Hose Ass'y	4		WQ010001-	L=950
2		0710 114 34	* Elbow, 45 Reducer	4		WQ010001-	PF3/8XPF1/2
3		0760 710 16	* Ring, O	4		WQ010001-	P14-90B
4		0555 140 40	* Bolt, Treatment	2		WQ010001-	M14X40
5		0595 140 00	* Washer, Treatment	2		WQ010001-	M14
6		D260 524 00	* Stay	1		WQ010001-	
7	#	0713 429 UA	* Joint Ass'y, Rotary	1		WQ010001-	Sh. No. 5-3
8		4070 551 02	* Hose Ass'y	2		WQ010001-	L=1080
9		0760 710 12	* Ring, O	4		WQ010001-	P11-90B
10		0719 804 UA	* Elbow	1		WQ010001-	
11		4072 662 03	* Connector	1		WQ010001-	
12		0710 707 02	* Tee	2		WQ010001-	
13		0595 100 00	* Washer, Treatment	4		WQ010001-	M10
14		0514 100 25	* Bolt, Treatment	4		WQ010001-	M10X25 P=1.25
15		4070 548 71	* Hose Ass'y	2		WQ010001-	L=1020
16		0711 402 02	* Adapter	1		WQ010001-	
17		0713 700 02	* Adapter	2		WQ010001-	
18		0790 000 04	* Tube, Spiral	M		WQ010001-	L=100X4
19		0713 700 94	* Adapter, Reducer	4		WQ010001-	PF3/8XPF1/2
20		0760 710 19	* Ring, O	4		WQ010001-	P18-90B
21		4580 729 00	* Pad	4		WQ010001-	
22		0820 067 09	* Band, Cable	2		WQ010001-	

1

https://truckmanualshub.com/

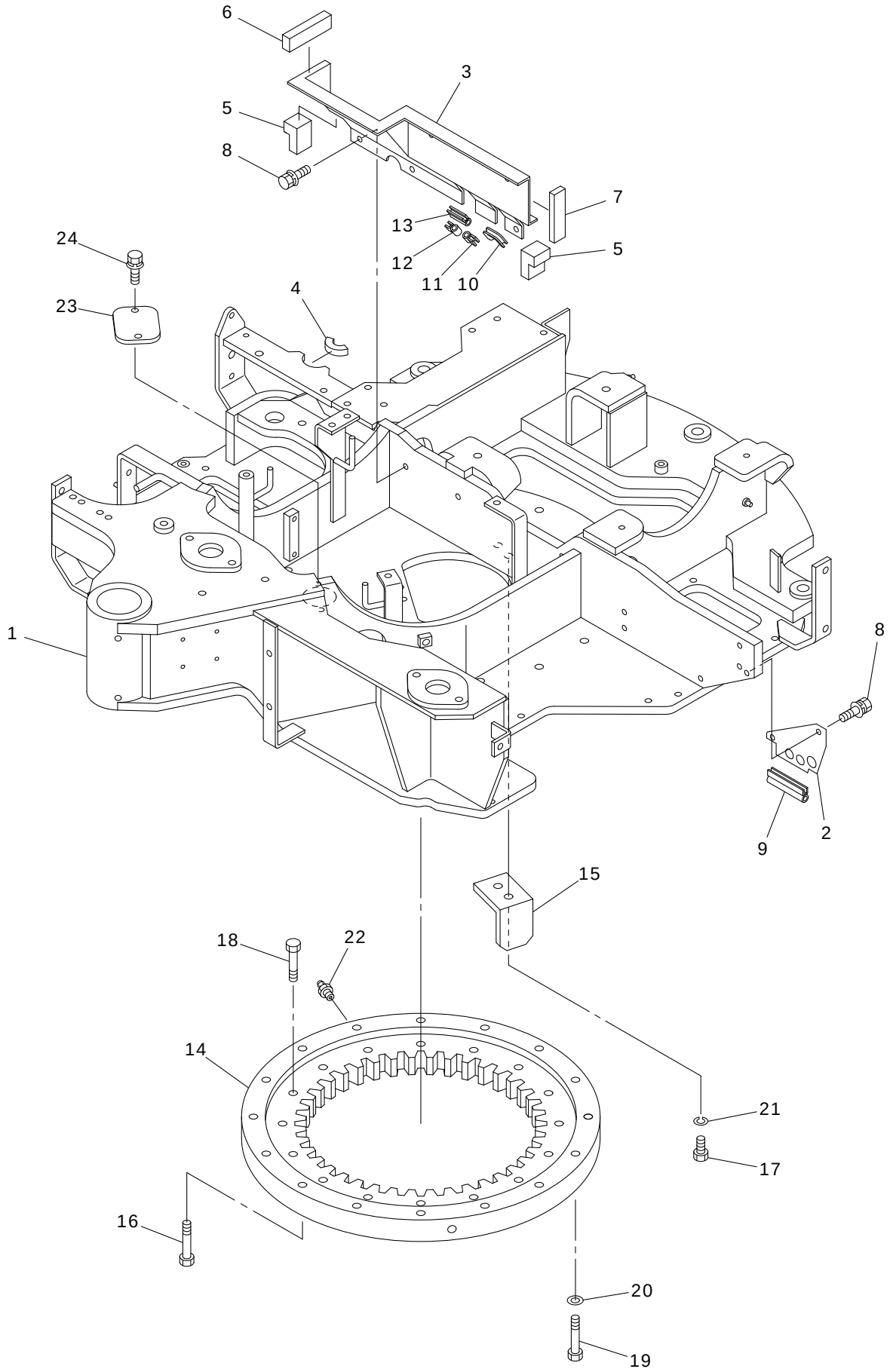

25V4-020100-1

IHI

TURNTABLE & SWING BEARING ASS'Y

MODEL 25V4

SHEET No 2-1

https://truckmanualshub.com/

	KEY No.	SUP.	PART No.	DESCRIPTION	Q'TY	CHAN.	SERIAL No.	REMARKS
●	0	×	F311 389 00	Frame Ass'y, Swing	1		WQ010001-	
	0-1	×	F320 256 00	Bearing Ass'y, Swing	1		WQ010001-	
●	1	△	D204 357 00	* Frame, Swing	1		WQ010001-***	
●	1	△	D204 398 00	* Frame, Swing	1		***-WQ020000	
●	1-1	△	D204 391 00	* Frame, Swing	1		WQ020001-	
	2		D419 280 00	* Bracket	1		WQ010001-	
	3		D419 278 00	* Bracket	1		WQ010001-	
	4		D493 537 00	* Panel, Sponge	1		WQ010001-	
	5		D493 538 00	* Panel, Sponge	2		WQ010001-	
	6		D493 646 00	* Panel, Sponge	1		WQ010001-	
	7		D493 540 00	* Panel, Sponge	1		WQ010001-	
	8		0517 080 20	* Bolt, Treatment (W/L.W, F.W)	5		WQ010001-	M8X20
	9		0910 870 05	* Seal	M		WQ010001-	L=90
	10		4550 519 00	* Seal	M		WQ010001-	L=60
	11		0910 870 05	* Seal	M		WQ010001-	L=15
	12		0910 870 05	* Seal	M		WQ010001-	L=15
	13		0910 870 05	* Seal	M		WQ010001-	L=35
	14		0605 428 UA	* Bearing, Swing	1		WQ010001-	
	15		D415 525 00	* Bracket	1		WQ010001-	
	16		D002 001 00	* Bolt, Reamer	1		WQ010001-	M12X70
	17		0513 120 30	* Bolt, Treatment	2		WQ010001-	M12X30
	18		0555 120 60	* Bolt, Treatment	16		WQ010001-	M12X60
	19		0555 120 70	* Bolt, Treatment	15		WQ010001-	M12X70
	20		0595 120 00	* Washer, Treatment	15		WQ010001-	M12
	21		0590 120 00	* Washer, Lock	2		WQ010001-	M12
	22		0728 111 15	* Nipple, Grease	1		WQ010001-	PT1/8
	23		4460 756 00	* Cover	1		WQ010001-	
	24		0517 080 20	* Bolt, Treatment (W/L.W, F.W)	2		WQ010001-	M8X20

https://truckmanualshub.com/

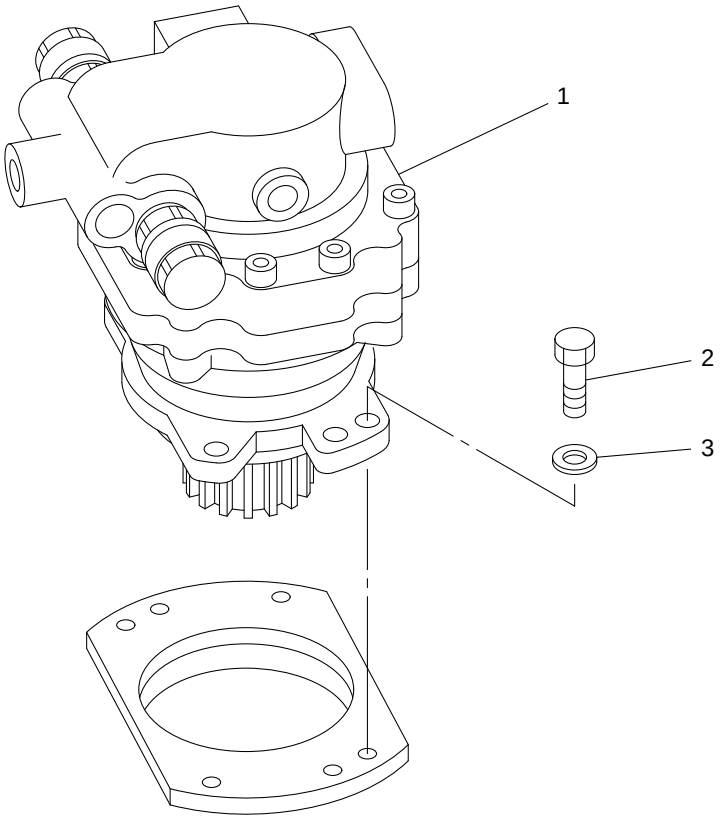

25VX3-030100-1

https://truckmanualshub.com/

	KEY No.	SUP.	PART No.	DESCRIPTION	Q'TY	CHAN.	SERIAL No.	REMARKS
●	0	×	F320 266 00	Swing Drive Device	1		WQ010001-	
	1	#	0781 374 UA	* Motor Ass'y, Swing	1		WQ010001-	Sh. No. 5-2
●	2		0555 120 35	* Bolt, Treatment	4		WQ010001-***	M12X35
●	2		0562 120 35	* Bolt, Socket Head	4	○	***-	M12X35
	3		0595 120 00	* Washer, Treatment	4		WQ010001-	M12

3

https://truckmanualshub.com/

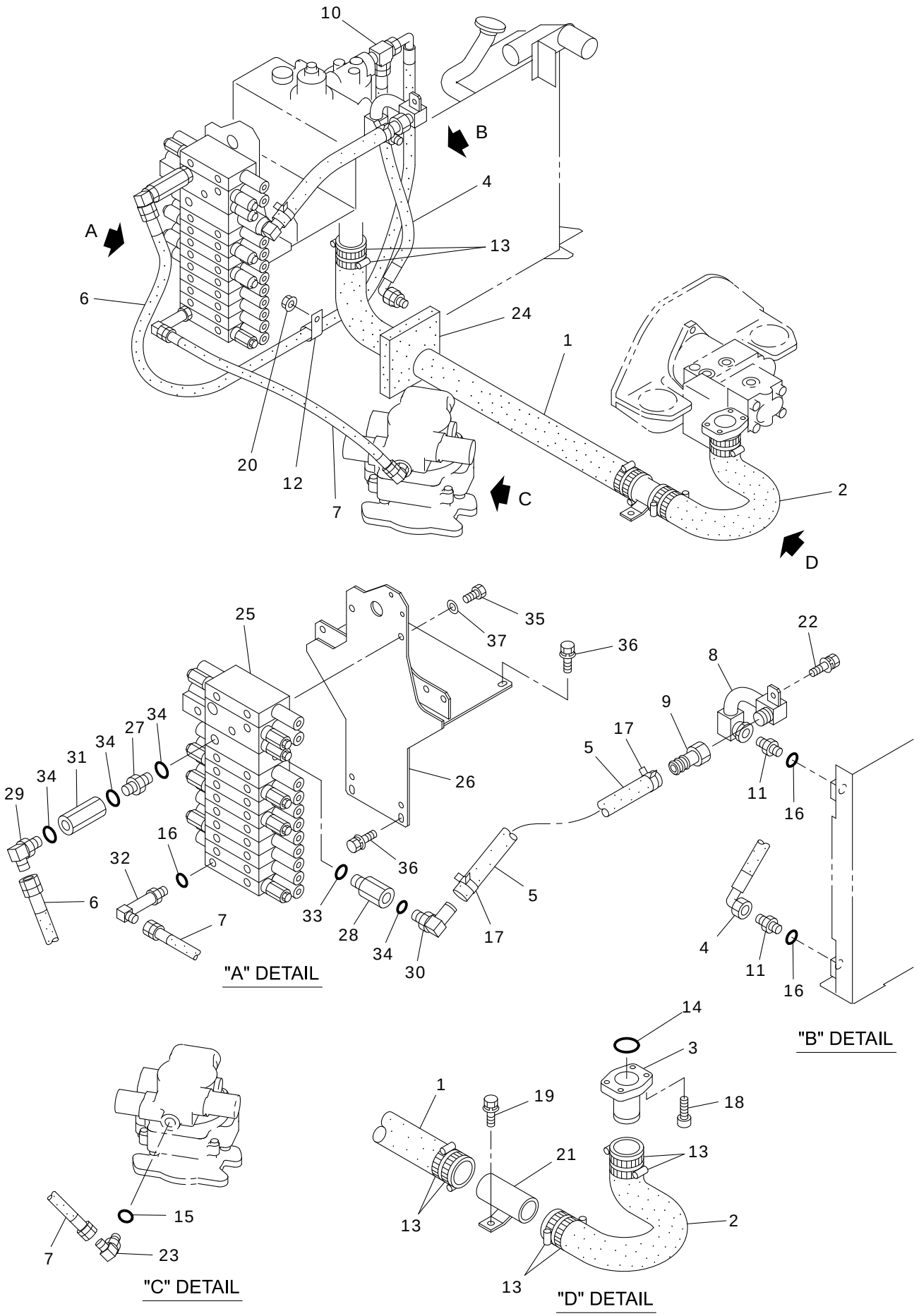

25V4-040100-1

https://truckmanualshub.com/

KEY No.	SUP.	PART No.	DESCRIPTION	Q'TY	CHAN.	SERIAL No.	REMARKS
0	×	F342 756 00	Piping Ass'y, Return & Suction	1		WQ010001-	
1		0776 600 07	* Hose	1		WQ010001-	
2		0776 600 05	* Hose	1		WQ010001-WQ020000	
2		0776 600 13	* Hose	1		WQ020001-	
3		D286 272 00	* Tube	1		WQ010001-	
4		D070 110 15	* Hose Ass'y	1		WQ010001-	L=430
5		D070 558 01	* Hose Ass'y	1		WQ010001-	L=480
6		D070 110 01	* Hose Ass'y	1		WQ010001-	L=1750
7		4070 015 15	* Hose Ass'y	1		WQ010001-	L=800
8		D286 279 00	* Tube	1		WQ010001-***	
8		D286 380 00	* Tube	1	○	***-	
9		D060 227 00	* Nipple	1		WQ010001-	
10		0710 709 12	* Tee, Special	1		WQ010001-	
11		D060 538 00	* Connector, Reducer	2		WQ010001-	PF1/2XPF3/4
12		4080 000 06	* Clamp, Hose	1		WQ010001-	
13		0690 083 10	* Clamp, Hose	8		WQ010001-	
14		0760 312 22	* Ring, O	1		WQ010001-	222-90B
15		0760 710 16	* Ring, O	1		WQ010001-	P14-90B
16		0760 710 19	* Ring, O	3		WQ010001-	P18-90B
17		0690 083 06	* Clamp, Hose	2		WQ010001-	
● 18		0562 100 25	* Bolt, Socket Head	4		WQ010001-	M10X25
19		0517 080 20	* Bolt, Treatment (W/L.W, F.W)	1		WQ010001-	M8X20
20		0524 100 00	* Nut, Hex. (W/F.W)	1		WQ010001-	M10 P=1.25
21		D430 286 00	* Pipe	1		WQ010001-	
22		0518 100 20	* Bolt, Treatment (W/L.W, F.W)	1		WQ010001-	M10X20 P=1.25
23		0710 122 10	* Elbow	1		WQ010001-	
24		D433 510 00	* Plate, Rubber	1		WQ010001-	
25	#	0784 017 UA	* Valve Ass'y, Control	1		WQ010001-	Sh. No. 5-4
26		D419 287 00	* Bracket	1		WQ010001-	
27		D060 514 00	* Connector	1		WQ010001-	
28		D060 515 00	* Connector, Reducer	1		WQ010001-	PF1XPF3/4
29		0710 113 66	* Elbow	1		WQ010001-	
30		0710 127 05	* Elbow	1		WQ010001-	
31		0785 947 UA	* Valve, Check	1		WQ010001-	
32		0710 117 07	* Elbow, Reducer	1		WQ010001-	PF1/2XPF3/8
33		0760 710 30	* Ring, O	1		WQ010001-	P29-90B
34		0760 710 24	* Ring, O	4		WQ010001-	P22.4-90B
35		0513 100 16	* Bolt, Treatment	4		WQ010001-	M10X16
36		0518 100 20	* Bolt, Treatment (W/L.W, F.W)	4		WQ010001-	M10X20 P=1.25
37		0595 100 00	* Washer, Treatment	4		WQ010001-	M10

https://truckmanualshub.com/

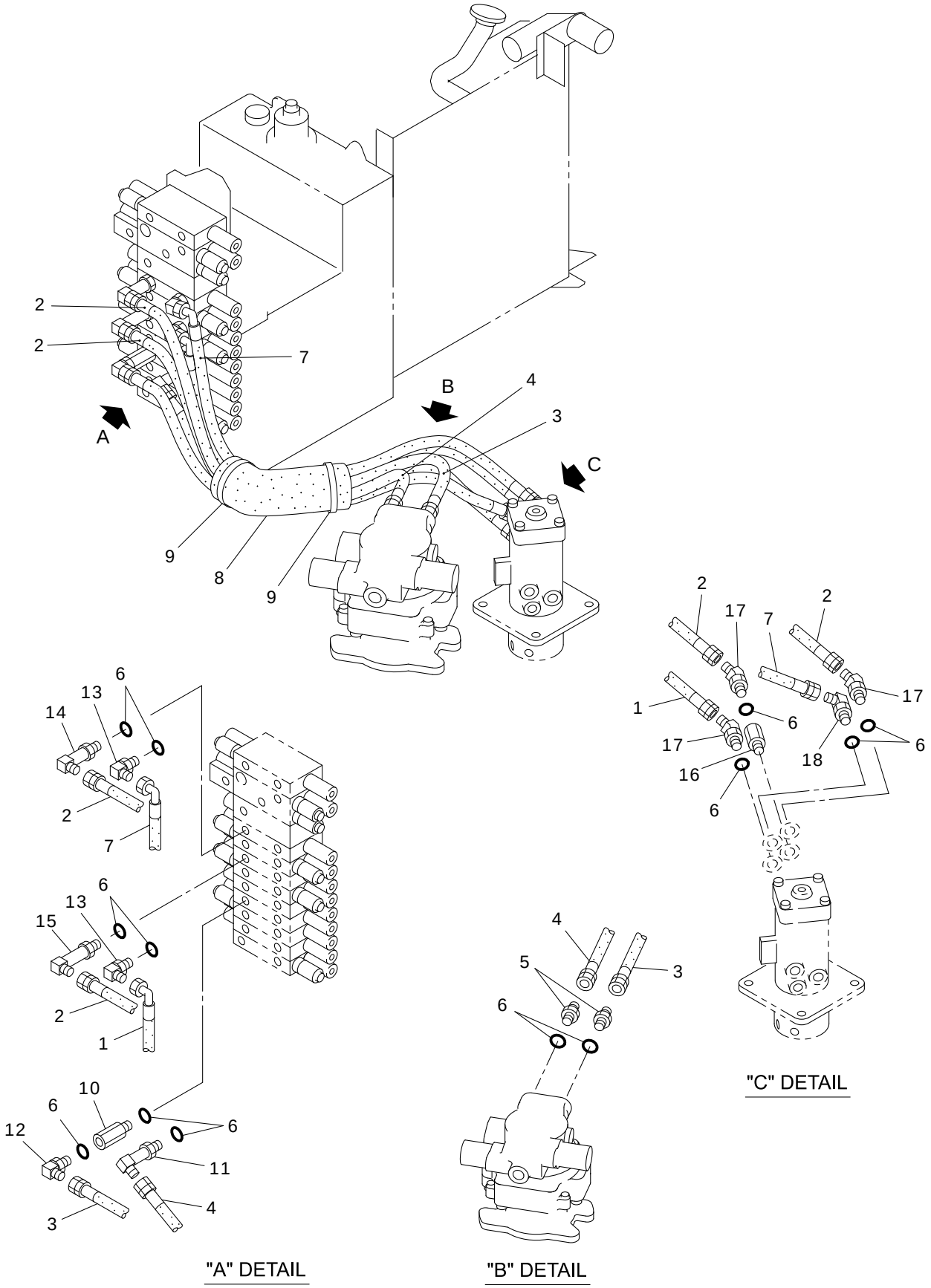

25V4-040200-1

https://truckmanualshub.com/

KEY No.	SUP.	PART No.	DESCRIPTION	Q'TY	CHAN.	SERIAL No.	REMARKS
● 0	×	F342 756 00	Piping Ass'y, Swing & Travel	1		WQ010001-	
● 1		D070 363 15	* Hose Ass'y	1		WQ010001-	L=810
2		D070 461 10	* Hose Ass'y	2		WQ010001-	L=930
3		4070 001 09	* Hose Ass'y	1		WQ010001-	L=900
4		4070 001 73	* Hose Ass'y	1		WQ010001-	L=730
5		0713 700 03	* Adapter	2		WQ010001-	
6		0760 710 16	* Ring, O	13		WQ010001-	P14-90B
7		D070 363 24	* Hose Ass'y	1		WQ010001-	L=760
8		4070 350 03	* Cover, Hose	1		WQ010001-	
9		0820 067 09	* Band, Cable	2		WQ010001-	
10		D060 483 00	* Connector	1		WQ010001-	
11		0710 117 05	* Elbow, Long	1		WQ010001-	
12		0710 113 33	* Elbow	1		WQ010001-	
13		0710 113 34	* Elbow, Reducer	2		WQ010001-	PF3/8XPF1/2
14		4060 051 00	* Elbow, Reducer	1		WQ010001-	PF3/8XPF1/2
● 15		4060 051 00	* Elbow, Reducer	1		WQ010001-	PF3/8XPF1/2
16		D060 536 00	* Connector	1		WQ010001-	
17		0710 114 34	* Elbow, 45 Reducer	3		WQ010001-	PF3/8XPF1/2
18		0710 113 34	* Elbow, Reducer	1		WQ010001-	PF3/8XPF1/2

4

https://truckmanualshub.com/

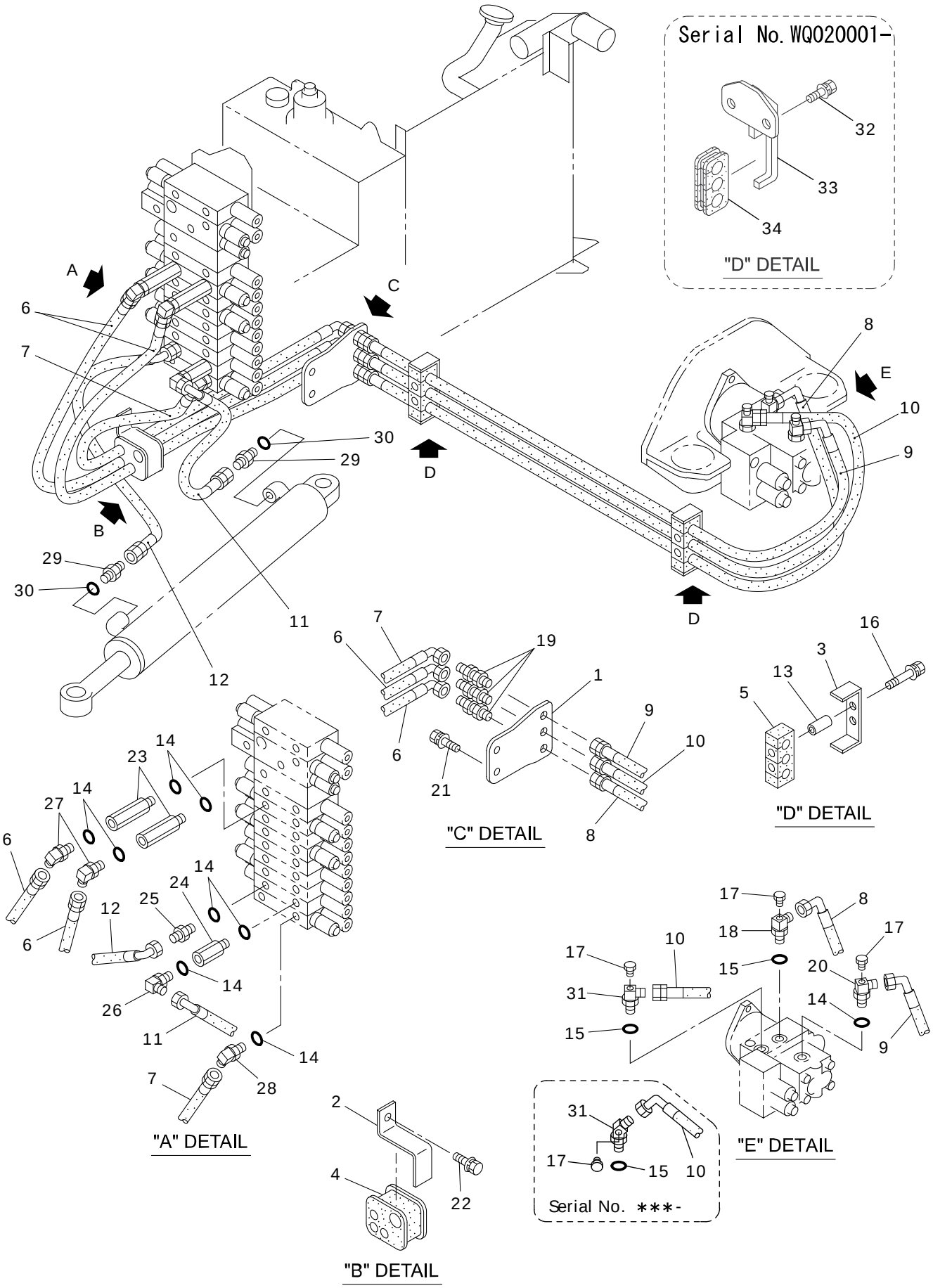

25V4-040300-1

注意1：見出番号10, 31はセットにて互換性有り。

NOTE 1 : The Key No.10, 31 are exchangeable each other by set.

IHI

PUMP DISCHARGE & BOOM SWING PIPING ASS'Y

MODEL 25V4

SHEET No 4-3

https://truckmanualshub.com/

KEY No.	SUP.	PART No.	DESCRIPTION	Q'TY	CHAN.	SERIAL No.	REMARKS
0	×	F342 756 00	Piping Ass'y, Pump Discharge & Boom Swing	1		WQ010001-	
0-1	×	F388 392 00	Piping Ass'y, Pump Discharge & Boom Swing	1		WQ010001-	
1		D419 310 00	* Bracket	1		WQ010001-***	
1		D419 641 00	* Bracket	1	○	***-	
2		D083 146 00	* Clamp	1		WQ010001-	
3		D419 311 00	* Bracket	2		WQ010001-	
4		D580 169 00	* Pad	1		WQ010001-	
5		D580 183 00	* Pad	2		WQ010001-	
6		D070 363 03	* Hose Ass'y	2		WQ010001-	L=1000
7		D070 363 24	* Hose Ass'y	1		WQ010001-	L=760
8		D070 363 27	* Hose Ass'y	1		WQ010001-	L=1600
9		D070 363 28	* Hose Ass'y	1		WQ010001-	L=1430
● 10		D070 461 13	* Hose Ass'y	1		WQ010001-***	L=1700
● 10		D070 363 29	* Hose Ass'y	1	△	***-	L=1630
11		4070 472 25	* Hose Ass'y	1		WQ010001-	L=520
12		4070 472 12	* Hose Ass'y	1		WQ010001-	L=450
13		D040 218 00	* Spacer	4		WQ010001-	
14		0760 710 16	* Ring, O	9		WQ010001-	P14-90B
15		0760 710 19	* Ring, O	2		WQ010001-	P18-90B
16		0517 080 60	* Bolt, Treatment (W/L.W, F.W)	4		WQ010001-	M8X60
17		0710 202 02	* Plug	3		WQ010001-	
18		D060 164 00	* Tee	1		WQ010001-	
19		D060 451 00	* Connector	3		WQ010001-	
20		D060 537 00	* Tee	1		WQ010001-	
21		0518 100 30	* Bolt, Treatment (W/L.W, F.W)	2		WQ010001-	M10X30 P=1.25
22		0518 100 20	* Bolt, Treatment (W/L.W, F.W)	1		WQ010001-	M10X20 P=1.25
23		D060 482 00	* Connector, Reducer	2		WQ010001-	PF3/8XPF1/2
24		D060 483 00	* Connector	2		WQ010001-	
25		0713 700 77	* Adapter, Reducer	1		WQ010001-	PF3/8XPF1/4
26		0710 113 32	* Elbow, Reducer	1		WQ010001-	PF3/8XPF1/4
27		0710 113 44	* Elbow	2		WQ010001-	
28		0710 113 34	* Elbow, Reducer	1		WQ010001-	PF3/8XPF1/2
29		0713 700 70	* Connector	2		WQ010001-	
30		0760 710 12	* Ring, O	2		WQ010001-	P11-90B
31		D060 164 00	* Tee	1		WQ010001-***	
● 31		D060 572 00	* Elbow, 45	1	△	***-	
32		0518 100 30	* Bolt, Treatment (W/L.W, F.W)	2		WQ020001-	M10X20 P=1.25
33		D419 670 00	* Bracket	1		WQ020001-	
34		D580 170 00	* Pad	1		WQ020001-	

4

https://truckmanualshub.com/

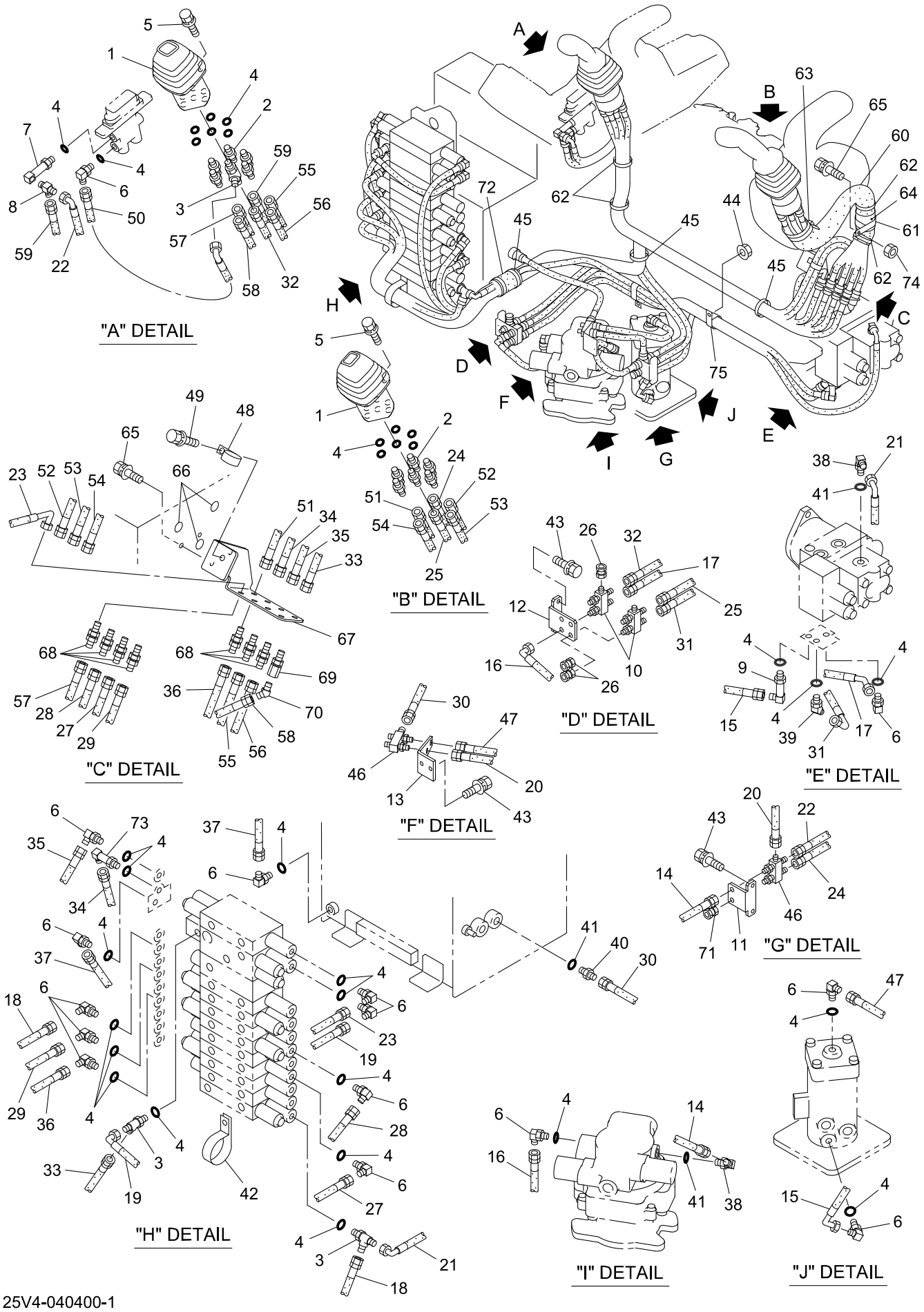

4

https://truckmanualshub.com/

KEY No.	SUP.	PART No.	DESCRIPTION	Q'TY	CHAN.	SERIAL No.	REMARKS
0	×	F342 766 00	Piping Ass'y, Control	1		WQ010001-	
● 1	#	0783 964 UA	* Valve Assy Remote Control	2		WQ010001-***	Sh. No. 5-5
● 1	#	0784 127 UA	* Valve Assy Remote Control	2	○	***-	Sh. No. 5-5A
2		0713 700 70	* Connector	11		WQ010001-	
3		0710 713 09	* Tee	3		WQ010001-	
4		0760 710 12	* Ring, O	33		WQ010001-	P11-90B
5		0517 060 25	* Bolt, Treatment (W/L.W, F.W)	6		WQ010001-	M6X25
6		0710 122 09	* Elbow	14		WQ010001-	
7		0719 805 UA	* Elbow	1		WQ010001-	
8		0710 709 02	* Tee	1		WQ010001-	
9		D060 028 00	* Elbow	1		WQ010001-	
10		D065 093 00	* Manifold	2		WQ010001-	
11		D418 929 00	* Bracket	1		WQ010001-	
12		D418 930 00	* Bracket	1		WQ010001-	
13		D419 281 00	* Bracket	1		WQ010001-	
14		4070 548 73	* Hose Ass'y	1		WQ010001-	L=390
15		4070 551 28	* Hose Ass'y	1		WQ010001-	L=830
16		4070 551 14	* Hose Ass'y	1		WQ010001-	L=260
17		4070 551 06	* Hose Ass'y	1		WQ010001-	L=1200
18		4070 548 15	* Hose Ass'y	1		WQ010001-	L=900
19		4070 551 40	* Hose Ass'y	1		WQ010001-	L=380
19-1	☆	4405 307 01	* Decal (B1)	2		WQ010001-	4405 307 00
20		4070 782 18	* Hose Ass'y	1		WQ010001-	L=230
21		4070 551 42	* Hose Ass'y	1		WQ010001-	L=1600
22		4070 551 44	* Hose Ass'y	1		WQ010001-	L=1120
22-1	☆	D407 818 04	* Decal (BT)	2		WQ010001-	D407 818 00
23		4070 551 43	* Hose Ass'y	1		WQ010001-	L=2450
23-1	☆	4405 308 01	* Decal (C1)	2		WQ010001-	4405 308 00
24		4070 548 01	* Hose Ass'y	1		WQ010001-	L=1900
24-1	☆	4405 312 02	* Decal (LT)	2		WQ010001-	4405 312 00
25		4070 548 01	* Hose Ass'y	1		WQ010001-	L=1900
25-1	☆	4405 311 02	* Decal (LP)	2		WQ010001-	4405 311 00
26		0710 303 02	* Plug, Swivel	3		WQ010001-	
27		4070 548 04	* Hose Ass'y	1		WQ010001-	L=1800
27-1	☆	4405 310 01	* Decal (S1)	2		WQ010001-	4405 310 00
28		4070 548 41	* Hose Ass'y	1		WQ010001-	L=1850
28-1	☆	4405 309 01	* Decal (A1)	2		WQ010001-	4405 309 00
29		4070 548 89	* Hose Ass'y	1		WQ010001-	L=2250
29-1	☆	4405 309 02	* Decal (A2)	2		WQ010001-	4405 309 00
30		4070 782 19	* Hose Ass'y	1		WQ010001-	L=370
31		4070 551 01	* Hose Ass'y	1		WQ010001-	L=1150
32		4070 548 33	* Hose Ass'y	1		WQ010001-	L=1150
32-1	☆	4405 311 01	* Decal (RP)	2		WQ010001-	4405 311 00
33		4070 548 80	* Hose Ass'y	1		WQ010001-	L=2450
33-1	☆	4405 307 01	* Decal (B1)	2		WQ010001-	4405 307 00
34		4070 548 85	* Hose Ass'y	1		WQ010001-	L=2550
34-1	☆	4405 307 02	* Decal (B2)	2		WQ010001-	4405 307 00
35		4070 548 85	* Hose Ass'y	1		WQ010001-	L=2550
35-1	☆	4405 308 02	* Decal (C2)	2		WQ010001-	4405 308 00
36		4070 548 23	* Hose Ass'y	1		WQ010001-	L=2200
36-1	☆	4405 310 02	* Decal (S2)	2		WQ010001-	4405 310 00
37		4070 548 82	* Hose Ass'y	1		WQ010001-	L=420

https://truckmanualshub.com/

KEY No.	SUP.	PART No.	DESCRIPTION	Q'TY	CHAN.	SERIAL No.	REMARKS
38		0710 113 32	* Elbow, Reducer	2		WQ010001-	PF3/8XPF1/4
39		0710 121 00	* Elbow, 45	1		WQ010001-	
40		0713 700 03	* Adapter	1		WQ010001-	
41		0760 710 16	* Ring, O	3		WQ010001-	P14-90B
42		4080 000 10	* Clamp, Hose	1		WQ010001-	
43		0517 080 20	* Bolt, Treatment (W/L.W, F.W)	6		WQ010001-	M8X20
44		0524 100 00	* Nut, Hex. (W/F.W)	1		WQ010001-	M10 P=1.25
45		0820 067 05	* Band, Cable	9		WQ010001-	
46		D065 094 00	* Manifold	2		WQ010001-	
47		4070 548 55	* Hose Ass'y	1		WQ010001-	L=350
● 48		4080 000 11	* Clamp	1		WQ010001-	
49		0518 100 20	* Bolt, Treatment (W/L.W, F.W)	1		WQ010001-	M10X20 P=1.25
50		4070 551 15	* Hose Ass'y	1		WQ010001-	L=350
50-1	☆	D407 818 03	* Decal (BP)	2		WQ010001-	D407 818 00
● 51		4070 548 75	* Hose Ass'y	1		WQ010001-	L=720
51-1	☆	4405 309 03	* Decal (L1)	2		WQ010001-	4405 309 00
● 52		4070 548 75	* Hose Ass'y	1		WQ010001-	L=720
52-1	☆	4405 310 03	* Decal (L2)	2		WQ010001-	4405 310 00
● 53		4070 548 75	* Hose Ass'y	1		WQ010001-	L=720
53-1	☆	4405 309 04	* Decal (L3)	2		WQ010001-	4405 309 00
● 54		4070 548 75	* Hose Ass'y	1		WQ010001-	L=720
54-1	☆	4405 310 04	* Decal (L4)	2		WQ010001-	4405 310 00
55		4070 548 06	* Hose Ass'y	1		WQ010001-	L=1200
55-1	☆	4405 308 03	* Decal (R2)	2		WQ010001-	4405 308 00
56		4070 548 06	* Hose Ass'y	1		WQ010001-	L=1200
56-1	☆	4405 307 04	* Decal (R3)	2		WQ010001-	4405 307 00
57		4070 548 19	* Hose Ass'y	1		WQ010001-	L=1250
57-1	☆	4405 307 03	* Decal (R1)	2		WQ010001-	4405 307 00
58		4070 548 19	* Hose Ass'y	1		WQ010001-	L=1250
58-1	☆	4405 308 04	* Decal (R4)	2		WQ010001-	4405 308 00
59		4070 548 08	* Hose Ass'y	1		WQ010001-	L=300
59-1	☆	4405 312 01	* Decal (RT)	2		WQ010001-	4405 312 00
60		D070 577 01	* Hose	1		WQ010001-	
61		4080 000 09	* Clamp, Hose	1		WQ010001-	
62		0820 067 09	* Band, Cable	4		WQ010001-	
63		0820 067 10	* Band, Cable	1		WQ010001-	
64		4580 016 00	* Pad	1		WQ010001-	
65		0518 100 25	* Bolt, Treatment (W/L.W, F.W)	3		WQ010001-	M10X25 P=1.25
66		D405 272 00	* Seal	3		WQ010001-	
67		D419 122 00	* Bracket	1		WQ010001-	
68		D060 137 00	* Adapter	7		WQ010001-	
69		0712 325 02	* Adapter	1		WQ010001-	
70		0712 310 40	* Elbow, 45	1		WQ010001-	
71		0710 303 03	* Plug, Swivel	1		WQ010001-	
72		4580 016 00	* Pad	1		WQ010001-	
73		D060 028 00	* Elbow	1		WQ010001-***	
73		0710 122 09	* Elbow	1	○	***-	
74		0545 100 00	* Nut, Treatment	1		WQ010001-	M10 P=1.25
● 75		4080 000 12	* Clamp	1		WQ010001-	

4

https://truckmanualshub.com/

[Memo]

https://truckmanualshub.com/

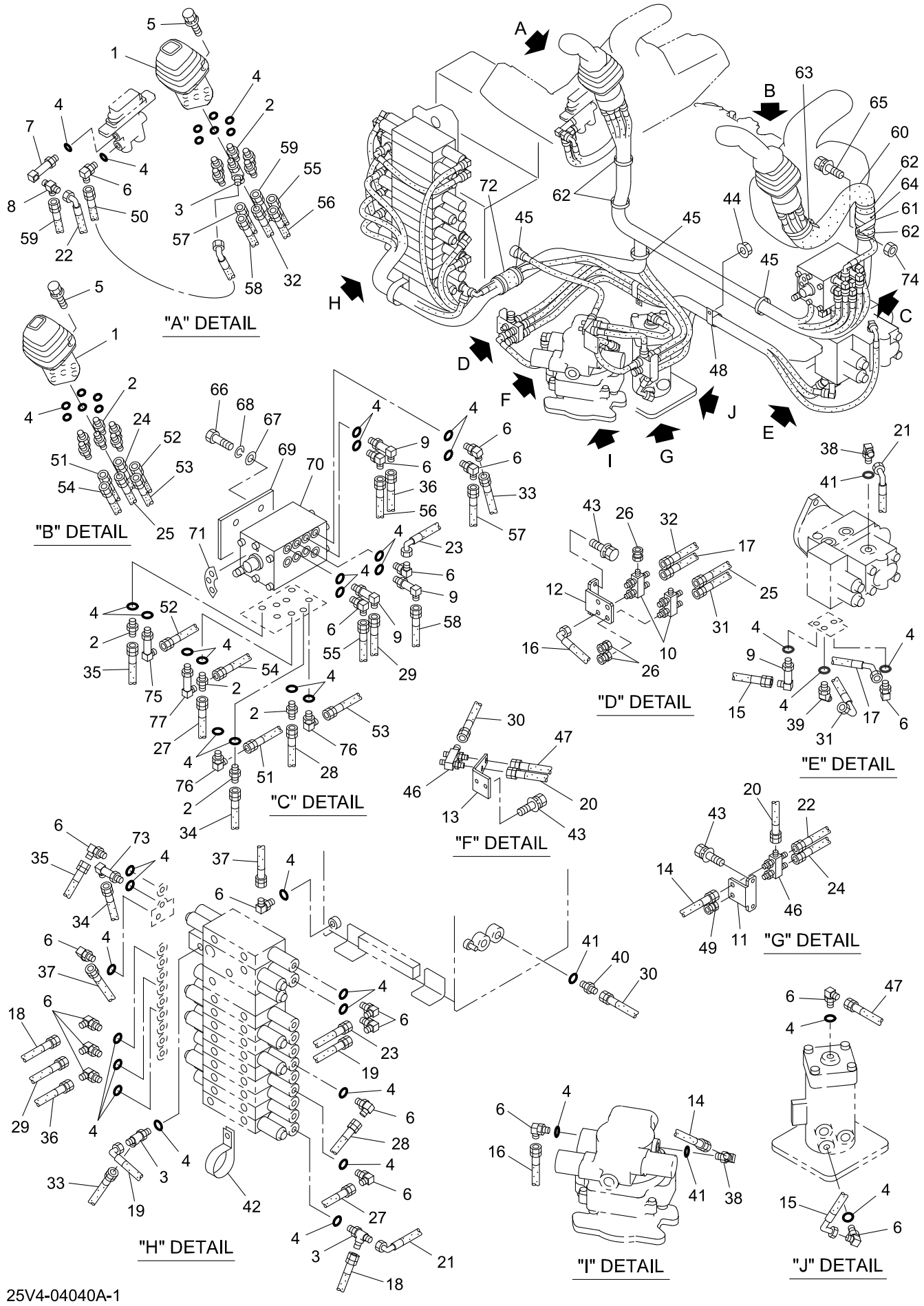

https://truckmanualshub.com/

KEY No.	SUP.	PART No.	DESCRIPTION	Q'TY	CHAN.	SERIAL No.	REMARKS
0	×	F342 766 00	Piping Ass'y, Control	1		WQ010001-	
● 1	#	0783 964 UA	* Valve Assy Remote Control	2		WQ010001-***	Sh. No. 5-5
● 1	#	0784 127 UA	* Valve Assy Remote Control	2	○	***-	Sh. No. 5-5A
2		0713 700 70	* Connector	15		WQ010001-	
3		0710 713 09	* Tee	3		WQ010001-	
4		0760 710 12	* Ring, O	49		WQ010001-	P11-90B
5		0517 060 25	* Bolt, Treatment (W/L.W, F.W)	6		WQ010001-	M6X25
6		0710 122 09	* Elbow	21		WQ010001-	
7		0719 805 UA	* Elbow	1		WQ010001-	
8		0710 709 02	* Tee	1		WQ010001-	
● 9		D060 028 00	* Elbow	4		WQ010001-	
10		D065 093 00	* Manifold	2		WQ010001-	
11		D418 929 00	* Bracket	1		WQ010001-	
12		D418 930 00	* Bracket	1		WQ010001-	
13		D419 281 00	* Bracket	1		WQ010001-	
14		4070 548 73	* Hose Ass'y	1		WQ010001-	L=390
15		4070 551 28	* Hose Ass'y	1		WQ010001-	L=830
16		4070 551 14	* Hose Ass'y	1		WQ010001-	L=260
17		4070 551 06	* Hose Ass'y	1		WQ010001-	L=1200
18		4070 548 15	* Hose Ass'y	1		WQ010001-	L=900
19		4070 551 40	* Hose Ass'y	1		WQ010001-	L=380
19-1	☆	4405 307 01	* Decal (B1)	2		WQ010001-	4405 307 00
20		4070 782 18	* Hose Ass'y	1		WQ010001-	L=230
21		4070 551 42	* Hose Ass'y	1		WQ010001-	L=1600
22		4070 551 44	* Hose Ass'y	1		WQ010001-	L=1120
22-1	☆	D407 818 04	* Decal (BT)	2		WQ010001-	D407 818 00
23		4070 551 43	* Hose Ass'y	1		WQ010001-	L=2450
23-1	☆	4405 308 01	* Decal (C1)	2		WQ010001-	4405 308 00
24		4070 548 01	* Hose Ass'y	1		WQ010001-	L=1900
24-1	☆	4405 312 02	* Decal (LT)	2		WQ010001-	4405 312 00
25		4070 548 01	* Hose Ass'y	1		WQ010001-	L=1900
25-1	☆	4405 311 02	* Decal (LP)	2		WQ010001-	4405 311 00
26		0710 303 02	* Plug, Swivel	3		WQ010001-	
27		4070 548 04	* Hose Ass'y	1		WQ010001-	L=1800
27-1	☆	4405 310 01	* Decal (S1)	2		WQ010001-	4405 310 00
28		4070 548 41	* Hose Ass'y	1		WQ010001-	L=1850
28-1	☆	4405 309 01	* Decal (A1)	2		WQ010001-	4405 309 00
29		4070 548 89	* Hose Ass'y	1		WQ010001-	L=2250
29-1	☆	4405 309 02	* Decal (A2)	2		WQ010001-	4405 309 00
30		4070 782 19	* Hose Ass'y	1		WQ010001-	L=370
31		4070 551 01	* Hose Ass'y	1		WQ010001-	L=1150
32		4070 548 33	* Hose Ass'y	1		WQ010001-	L=1150
32-1	☆	4405 311 01	* Decal (RP)	2		WQ010001-	4405 311 00
33		4070 548 80	* Hose Ass'y	1		WQ010001-	L=2450
33-1	☆	4405 307 01	* Decal (B1)	2		WQ010001-	4405 307 00
34		4070 548 85	* Hose Ass'y	1		WQ010001-	L=2550
34-1	☆	4405 307 02	* Decal (B2)	2		WQ010001-	4405 307 00
35		4070 548 85	* Hose Ass'y	1		WQ010001-	L=2550
35-1	☆	4405 308 02	* Decal (C2)	2		WQ010001-	4405 308 00
36		4070 548 23	* Hose Ass'y	1		WQ010001-	L=2200
36-1	☆	4405 310 02	* Decal (S2)	2		WQ010001-	4405 310 00
37		4070 548 82	* Hose Ass'y	1		WQ010001-	L=420

https://truckmanualshub.com/

KEY No.	SUP.	PART No.	DESCRIPTION	Q'TY	CHAN.	SERIAL No.	REMARKS
38		0710 113 32	* Elbow, Reducer	2		WQ010001-	PF3/8XPF1/4
39		0710 121 00	* Elbow, 45	2		WQ010001-	
40		0713 700 03	* Adapter	1		WQ010001-	
41		0760 710 16	* Ring, O	3		WQ010001-	P14-90B
42		4080 000 10	* Clamp, Hose	1		WQ010001-	
43		0517 080 20	* Bolt, Treatment (W/L.W, F.W)	6		WQ010001-	M8X20
44		0524 100 00	* Nut, Hex. (W/F.W)	1		WQ010001-	M10 P=1.25
45		0820 067 05	* Band, Cable	9		WQ010001-	
46		D065 094 00	* Manifold	2		WQ010001-	
47		4070 548 55	* Hose Ass'y	1		WQ010001-	L=350
● 48		4080 000 12	* Clamp	1		WQ010001-	
49		0710 303 03	* Plug, Swivel	1		WQ010001-	
50		4070 551 15	* Hose Ass'y	1		WQ010001-	L=350
50-1	☆	D407 818 03	* Decal (BP)	2		WQ010001-	D407 818 00
● 51		4070 548 75	* Hose Ass'y	1		WQ010001-	L=720
51-1	☆	4405 309 03	* Decal (L1)	2		WQ010001-	4405 309 00
● 52		4070 548 75	* Hose Ass'y	1		WQ010001-	L=720
52-1	☆	4405 310 03	* Decal (L2)	2		WQ010001-	4405 310 00
● 53		4070 548 75	* Hose Ass'y	1		WQ010001-	L=720
53-1	☆	4405 309 04	* Decal (L3)	2		WQ010001-	4405 309 00
● 54		4070 548 75	* Hose Ass'y	1		WQ010001-	L=720
54-1	☆	4405 310 04	* Decal (L4)	2		WQ010001-	4405 310 00
55		4070 548 06	* Hose Ass'y	1		WQ010001-	L=1200
55-1	☆	4405 308 03	* Decal (R2)	2		WQ010001-	4405 308 00
56		4070 548 06	* Hose Ass'y	1		WQ010001-	L=1200
56-1	☆	4405 307 04	* Decal (R3)	2		WQ010001-	4405 307 00
57		4070 548 19	* Hose Ass'y	1		WQ010001-	L=1250
57-1	☆	4405 307 03	* Decal (R1)	2		WQ010001-	4405 307 00
58		4070 548 19	* Hose Ass'y	1		WQ010001-	L=1250
58-1	☆	4405 308 04	* Decal (R4)	2		WQ010001-	4405 308 00
59		4070 548 08	* Hose Ass'y	1		WQ010001-	L=300
59-1	☆	4405 312 01	* Decal (RT)	2		WQ010001-	4405 312 00
60		D070 577 01	* Hose	1		WQ010001-	
61		4080 000 09	* Clamp, Hose	1		WQ010001-	
62		0820 067 09	* Band, Cable	4		WQ010001-	
63		0820 067 10	* Band, Cable	1		WQ010001-	
64		4580 016 00	* Pad	1		WQ010001-	
65		0518 100 25	* Bolt, Treatment (W/L.W, F.W)	1		WQ010001-	M10X25 P=1.25
66		0550 120 25	* Bolt, Hex.	3		WQ010001-	M12X25
67		0593 120 00	* Washer, Flat	3		WQ010001-	M12
68		0590 120 00	* Washer, Lock	3		WQ010001-	M12
69		D040 345 00	* Spacer	1		WQ010001-	
70	#	0784 112 UA	* Valve Ass'y, Multiple (For A-D)	1		WQ010001-	Sh. No. 5-15
70-1	#	0784 113 UA	* Valve Ass'y, Multiple (For A, B, G)	1		WQ010001-	Sh. No. 5-15[A]
71		D405 447 00	* Decal (For A-D)	1		WQ010001-	
71-1		D405 518 00	* Decal (For A, B, G)	1		WQ010001-	
72		4580 016 00	* Pad	1		WQ010001-	
73		D060 028 00	* Elbow	1		WQ010001-***	
73		0710 122 09	* Elbow	1	○	***-	
74		0545 100 00	* Nut, Treatment	1		WQ010001-	M10 P=1.25
75		D060 028 00	* Elbow	1		WQ010001-***	
75		0710 121 00	* Elbow, 45	1	○	***-	

https://truckmanualshub.com/

KEY No.	SUP.	PART No.	DESCRIPTION	Q'TY	CHAN.	SERIAL No.	REMARKS
76		0710 122 09	* Elbow	2		WQ010001-***	
● 76		0713 700 70	* Connector	2	○	***-	
● 77		D060 028 00	* Elbow	1		WQ010001-***	
● 77		0713 700 70	* Connector	1		***-	

4

https://truckmanualshub.com/

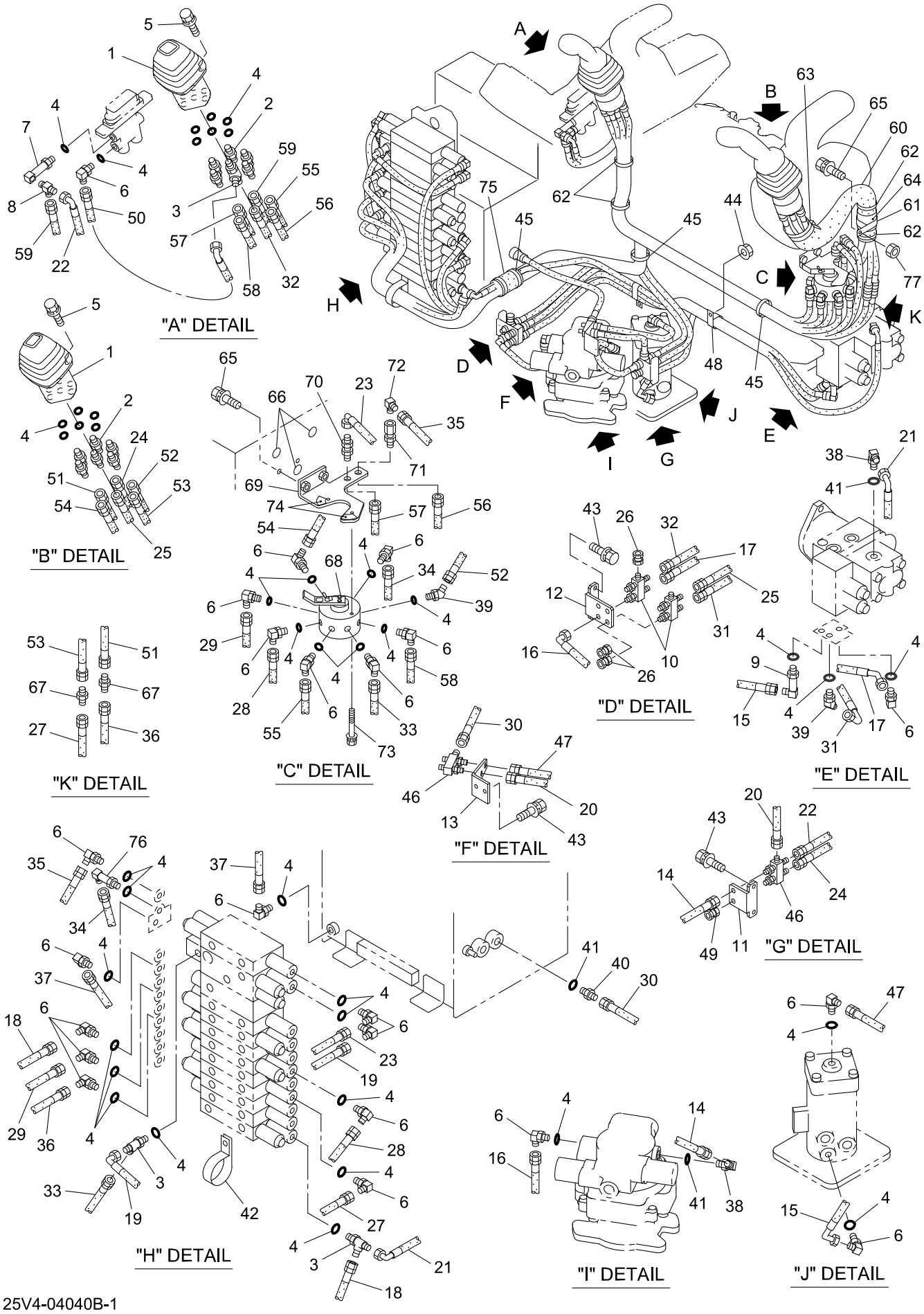

4

IHI

CONTROL PIPING ASS'Y (FOR A, F CHANGE)

MODEL 25V4

SHEET No 4-4[B]

https://truckmanualshub.com/

KEY No.	SUP.	PART No.	DESCRIPTION	Q'TY	CHAN.	SERIAL No.	REMARKS
0	×	F342 766 00	Piping Ass'y, Control	1		WQ010001-	
● 1	#	0783 964 UA	* Valve Assy Remote Control	2		WQ010001-***	Sh. No. 5-5
● 1	#	0784 127 UA	* Valve Assy Remote Control	2	○	***-	Sh. No. 5-5A
2		0713 700 70	* Connector	11		WQ010001-	
3		0710 713 09	* Tee	3		WQ010001-	
4		0760 710 12	* Ring, O	41		WQ010001-	P11-90B
5		0517 060 25	* Bolt, Treatment (W/L.W, F.W)	6		WQ010001-	M6X25
6		0710 122 09	* Elbow	21		WQ010001-	
7		0719 805 UA	* Elbow	1		WQ010001-	
8		0710 709 02	* Tee	1		WQ010001-	
9		D060 028 00	* Elbow	1		WQ010001-	
10		D065 093 00	* Manifold	2		WQ010001-	
11		D418 929 00	* Bracket	1		WQ010001-	
12		D418 930 00	* Bracket	1		WQ010001-	
13		D419 281 00	* Bracket	1		WQ010001-	
14		4070 548 73	* Hose Ass'y	1		WQ010001-	L=390
15		4070 551 28	* Hose Ass'y	1		WQ010001-	L=830
16		4070 551 14	* Hose Ass'y	1		WQ010001-	L=260
17		4070 551 06	* Hose Ass'y	1		WQ010001-	L=1200
18		4070 548 15	* Hose Ass'y	1		WQ010001-	L=900
19		4070 551 40	* Hose Ass'y	1		WQ010001-	L=380
19-1	☆	4405 307 01	* Decal (B1)	2		WQ010001-	4405 307 00
20		4070 782 18	* Hose Ass'y	1		WQ010001-	L=230
21		4070 551 42	* Hose Ass'y	1		WQ010001-	L=1600
22		4070 551 44	* Hose Ass'y	1		WQ010001-	L=1120
22-1	☆	D407 818 04	* Decal (BT)	2		WQ010001-	D407 818 00
23		4070 551 43	* Hose Ass'y	1		WQ010001-	L=2450
23-1	☆	4405 308 01	* Decal (C1)	2		WQ010001-	4405 308 00
24		4070 548 01	* Hose Ass'y	1		WQ010001-	L=1900
24-1	☆	4405 312 02	* Decal (LT)	2		WQ010001-	4405 312 00
25		4070 548 01	* Hose Ass'y	1		WQ010001-	L=1900
25-1	☆	4405 311 02	* Decal (LP)	2		WQ010001-	4405 311 00
26		0710 303 02	* Plug, Swivel	3		WQ010001-	
27		4070 548 04	* Hose Ass'y	1		WQ010001-	L=1800
27-1	☆	4405 310 01	* Decal (S1)	2		WQ010001-	4405 310 00
28		4070 548 41	* Hose Ass'y	1		WQ010001-	L=1850
28-1	☆	4405 309 01	* Decal (A1)	2		WQ010001-	4405 309 00
29		4070 548 89	* Hose Ass'y	1		WQ010001-	L=2250
29-1	☆	4405 309 02	* Decal (A2)	2		WQ010001-	4405 309 00
30		4070 782 19	* Hose Ass'y	1		WQ010001-	L=370
31		4070 551 01	* Hose Ass'y	1		WQ010001-	L=1150
32		4070 548 33	* Hose Ass'y	1		WQ010001-	L=1150
32-1	☆	4405 311 01	* Decal (RP)	2		WQ010001-	4405 311 00
33		4070 548 80	* Hose Ass'y	1		WQ010001-	L=2450
33-1	☆	4405 307 01	* Decal (B1)	2		WQ010001-	4405 307 00
34		4070 548 85	* Hose Ass'y	1		WQ010001-	L=2550
34-1	☆	4405 307 02	* Decal (B2)	2		WQ010001-	4405 307 00
35		4070 548 85	* Hose Ass'y	1		WQ010001-	L=2550
35-1	☆	4405 308 02	* Decal (C2)	2		WQ010001-	4405 308 00
36		4070 548 23	* Hose Ass'y	1		WQ010001-	L=2200
36-1	☆	4405 310 02	* Decal (S2)	2		WQ010001-	4405 310 00
37		4070 548 82	* Hose Ass'y	1		WQ010001-	L=420

https://truckmanualshub.com/

KEY No.	SUP.	PART No.	DESCRIPTION	Q'TY	CHAN.	SERIAL No.	REMARKS
38		0710 113 32	* Elbow, Reducer	2		WQ010001-	PF3/8XPF1/4
39		0710 121 00	* Elbow, 45	3		WQ010001-	
40		0713 700 03	* Adapter	1		WQ010001-	
41		0760 710 16	* Ring, O	3		WQ010001-	P14-90B
42		4080 000 10	* Clamp, Hose	1		WQ010001-	
43		0517 080 20	* Bolt, Treatment (W/L.W, F.W)	6		WQ010001-	M8X20
44		0524 100 00	* Nut, Hex. (W/F.W)	1		WQ010001-	M10 P=1.25
45		0820 067 05	* Band, Cable	9		WQ010001-	
46		D065 094 00	* Manifold	2		WQ010001-	
47		4070 548 55	* Hose Ass'y	1		WQ010001-	L=350
● 48		4080 000 12	* Clamp	1		WQ010001-	
49		0710 303 03	* Plug, Swivel	1		WQ010001-	
50		4070 551 15	* Hose Ass'y	1		WQ010001-	L=350
50-1	☆	D407 818 03	* Decal (BP)	2		WQ010001-	D407 818 00
● 51		4070 548 75	* Hose Ass'y	1		WQ010001-	L=720
51-1	☆	4405 309 03	* Decal (L1)	2		WQ010001-	4405 309 00
● 52		4070 548 75	* Hose Ass'y	1		WQ010001-	L=720
52-1	☆	4405 310 03	* Decal (L2)	2		WQ010001-	4405 310 00
● 53		4070 548 75	* Hose Ass'y	1		WQ010001-	L=720
53-1	☆	4405 309 04	* Decal (L3)	2		WQ010001-	4405 309 00
● 54		4070 548 75	* Hose Ass'y	1		WQ010001-	L=720
54-1	☆	4405 310 04	* Decal (L4)	2		WQ010001-	4405 310 00
55		4070 548 06	* Hose Ass'y	1		WQ010001-	L=1200
55-1	☆	4405 308 03	* Decal (R2)	2		WQ010001-	4405 308 00
56		4070 548 06	* Hose Ass'y	1		WQ010001-	L=1200
56-1	☆	4405 307 04	* Decal (R3)	2		WQ010001-	4405 307 00
57		4070 548 19	* Hose Ass'y	1		WQ010001-	L=1250
57-1	☆	4405 307 03	* Decal (R1)	2		WQ010001-	4405 307 00
58		4070 548 19	* Hose Ass'y	1		WQ010001-	L=1250
58-1	☆	4405 308 04	* Decal (R4)	2		WQ010001-	4405 308 00
59		4070 548 08	* Hose Ass'y	1		WQ010001-	L=300
59-1	☆	4405 312 01	* Decal (RT)	2		WQ010001-	4405 312 00
60		D070 577 01	* Hose	1		WQ010001-	
61		4080 000 09	* Clamp, Hose	1		WQ010001-	
62		0820 067 09	* Band, Cable	4		WQ010001-	
63		0820 067 10	* Band, Cable	1		WQ010001-	
64		4580 016 00	* Pad	1		WQ010001-	
65		0518 100 25	* Bolt, Treatment (W/L.W, F.W)	3		WQ010001-	M10X25 P=1.25
66		D405 272 00	* Seal	3		WQ010001-	
67		0712 326 01	* Adapter	2		WQ010001-	
68	#	0756 094 UA	* Valve Ass'y, Selector	1		WQ010001-	Sh. No. 5-15[B]
69		D418 583 00	* Bracket	1		WQ010001-***	
69		D419 656 00	* Bracket	1	○	***-	
70		D060 137 00	* Adapter	1		WQ010001-	
71		0712 325 02	* Adapter	1		WQ010001-	
72		0712 310 50	* Elbow	1		WQ010001-	
73		0517 060 60	* Bolt, Treatment (W/L.W, F.W)	2		WQ010001-	M6X60
74		4448 987 00	* Decal (For A, F)	1		WQ010001-	
75		4580 016 00	* Pad	1		WQ010001-	
76		D060 028 00	* Elbow	1		WQ010001-***	
76		0710 122 09	* Elbow	1	○	***-	
77		0545 100 00	* Nut, Treatment	1		WQ010001-	M10 P=1.25

https://truckmanualshub.com/

[Memo]

https://truckmanualshub.com/

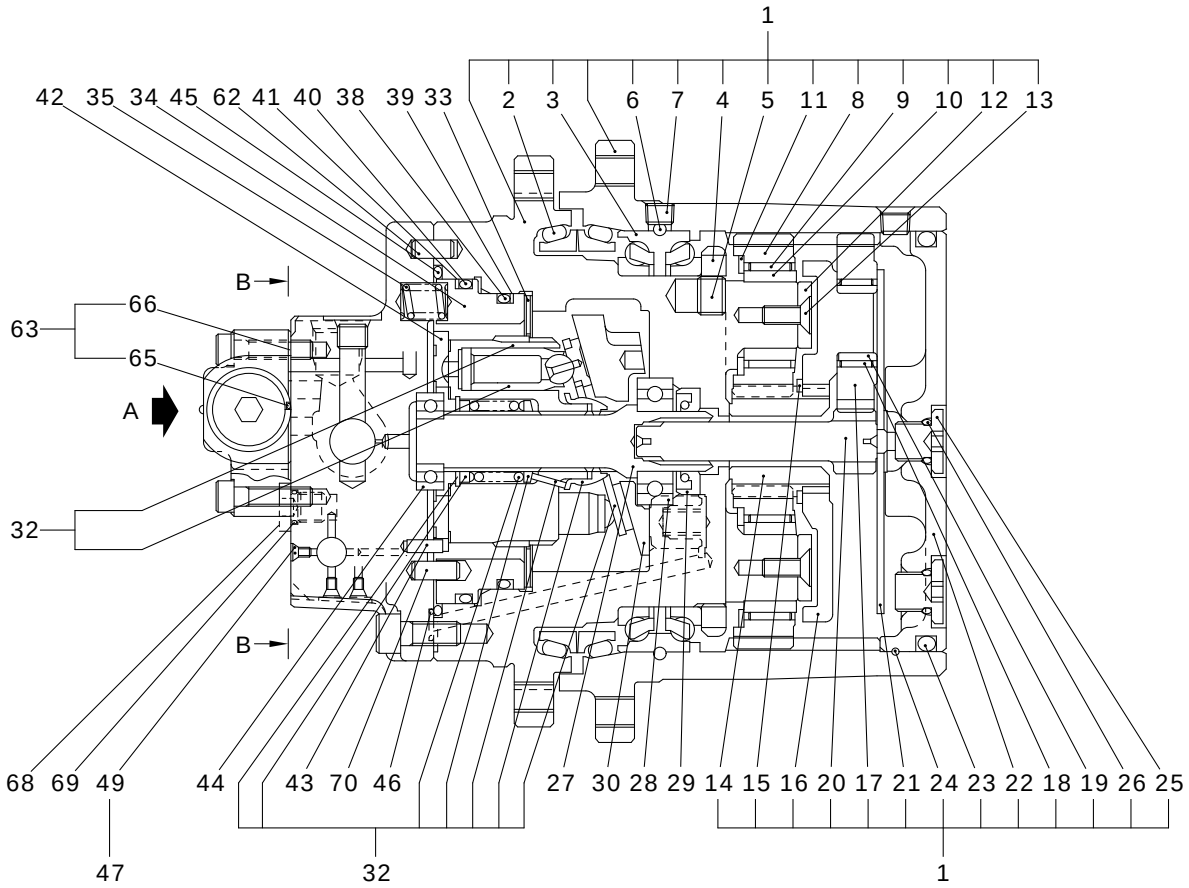

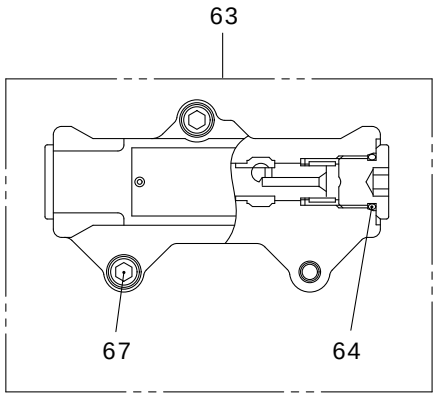

"A" VIEW

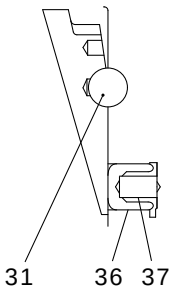

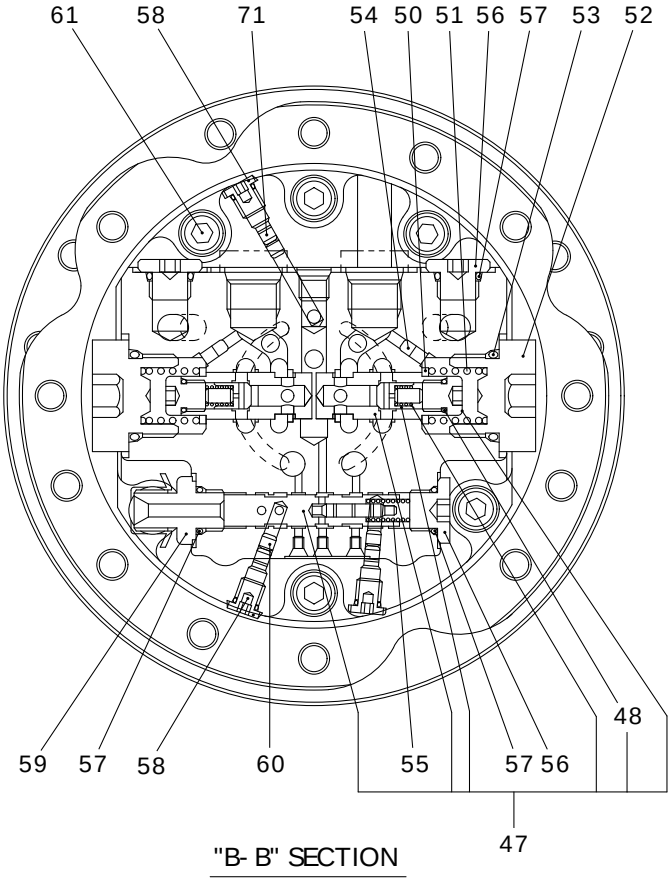

"B- B" SECTION

0781375UA-1

https://truckmanualshub.com/

KEY No.	SUP.	PART No.	DESCRIPTION	Q'TY	CHAN.	SERIAL No.	REMARKS
0		0781 375 UA	Motor Ass'y, Travel	2		WQ010001-	
1		0781 375 91	* Reduction Gear Ass'y	1		WQ010001-	
2		0757 698 01	** Seal, Floating	2		WQ010001-	
3		0757 698 02	** Bearing	1		WQ010001-	
4		0781 375 01	** Nut, Ring	1		WQ010001-	
5		0781 100 01	** Plug	2		WQ010001-	
6		0609 010 10	** Ball, Steel	109		WQ010001-	d=5/32
7		0710 201 01	** Plug	2		WQ010001-	PT1/8
8		0781 375 02	** Gear, Planetary (B)	4		WQ010001-	
9		0757 606 20	** Bearing	4		WQ010001-	
10		0781 375 03	** Race, Inner	4		WQ010001-	
11		0757 698 06	** Washer, Thrust	4		WQ010001-	
12		0757 698 07	** Plate, Thrust	1		WQ010001-	
13		0753 764 11	** Screw, Flat Head	4		WQ010001-	
14		0781 375 04	** Gear, Sun	1		WQ010001-	
15		0781 375 05	** Ring, Snap	1		WQ010001-	
16		0781 375 06	** Holder	1		WQ010001-	
17		0781 375 07	** Gear, Planetary (A)	3		WQ010001-	
18		0753 764 15	** Bearing	3		WQ010001-	
19		0753 764 16	** Race, Inner	3		WQ010001-	
20		0781 375 08	** Gear, Drive	1		WQ010001-	
21		0781 375 09	** Plate, Thrust	1		WQ010001-	
21-1		0781 375 10	** Plate, Thrust	1		WQ010001-	
21-2		0781 375 11	** Plate, Thrust	1		WQ010001-	
22		0781 375 12	** Cover	1		WQ010001-	
23		0760 711 30	** Ring, O	1		WQ010001-	P130-90B
24		0757 698 16	** Wire	1		WQ010001-	
25		0753 764 53	** Plug	2		WQ010001-	
26		0760 710 12	** Ring, O	2		WQ010001-	P11-90B
27		0757 698 17	* Shaft	1		WQ010001-	
28		0757 740 12	* Bearing	1		WQ010001-	
29		0781 100 16	* Seal, Oil	1		WQ010001-	
30		0781 375 13	* Plate, Swash	1		WQ010001-	
31		0781 100 18	* Ball, Steel	2		WQ010001-	
32		0781 375 93	* Block Ass'y, Cylinder	1		WQ010001-	
33		0781 375 14	* Plate, Disk	1		WQ010001-	
34		0781 375 15	* Piston, Brake	1		WQ010001-	
35		0781 375 16	* Spring	10		WQ010001-	
36		0781 229 03	* Piston	2		WQ010001-	
37		0781 229 04	* Spring	2		WQ010001-	
38		0760 312 39	* Ring, O	1		WQ010001-	239-90B
39		0762 172 39	* Ring, Back-up	1		WQ010001-	239-T3
40		0760 312 42	* Ring, O	1		WQ010001-	242-90B
41		0762 172 42	* Ring, Back-up	1		WQ010001-	242-T3
42		0757 698 32	* Plate, Valve	1		WQ010001-	
43		0753 795 11	* Pin	1		WQ010001-	
44		0757 740 14	* Bearing	1		WQ010001-	#6002UU
45		0760 212 45	* Ring, O	1		WQ010001-	245-70B
46		0760 710 07	* Ring, O	4		WQ010001-	P7-90B
47		0781 375 94	* Plate, Base	1		WQ010001-	
48		0757 698 38	** Ring, O	2		WQ010001-	S8-70B
49		0757 698 47	** Plug	6		WQ010001-	

https://truckmanualshub.com/

KEY No.	SUP.	PART No.	DESCRIPTION	Q'TY	CHAN.	SERIAL No.	REMARKS
50		0757 698 39	* Seat, Spring	2		WQ010001-	
51		0781 375 17	* Spring	2		WQ010001-	
52		0781 375 18	* Cap	2		WQ010001-	
53		0760 710 25	* Ring, O	2		WQ010001-	P24-90B
54		0781 375 19	* Olifice	2		WQ010001-	
55		0781 375 20	* Spring	1		WQ010001-	
56		0781 375 21	* Plug	3		WQ010001-	
57		0760 710 12	* Ring, O	4		WQ010001-	P11-90B
58		0781 375 22	* Plug	3		WQ010001-	
59		0781 375 23	* Plug	1		WQ010001-	
60		0781 100 23	* Olifice	4		WQ010001-	
61		0562 080 20	* Bolt, Socket Head	6		WQ010001-	M8X20
62		0753 580 15	* Pin	2		WQ010001-	
63		0781 375 92	* Valve Ass'y	1		WQ010001-	
64		0760 710 16	** Ring, O	2		WQ010001-	P14-90B
65		0760 710 10	** Ring, O	3		WQ010001-	P10-90B
66		0760 710 07	** Ring, O	1		WQ010001-	P7-90B
67		0562 060 25	** Bolt, Socket Head	3		WQ010001-	M6X25
68		0757 785 06	* Plug	2		WQ010001-	
69		0760 710 08	* Ring, O	2		WQ010001-	P8-90B
70		0781 375 24	* Pin	2		WQ010001-	
71		0753 764 51	* Olifice	1		WQ010001-	

https://truckmanualshub.com/

[Memo]

https://truckmanualshub.com/

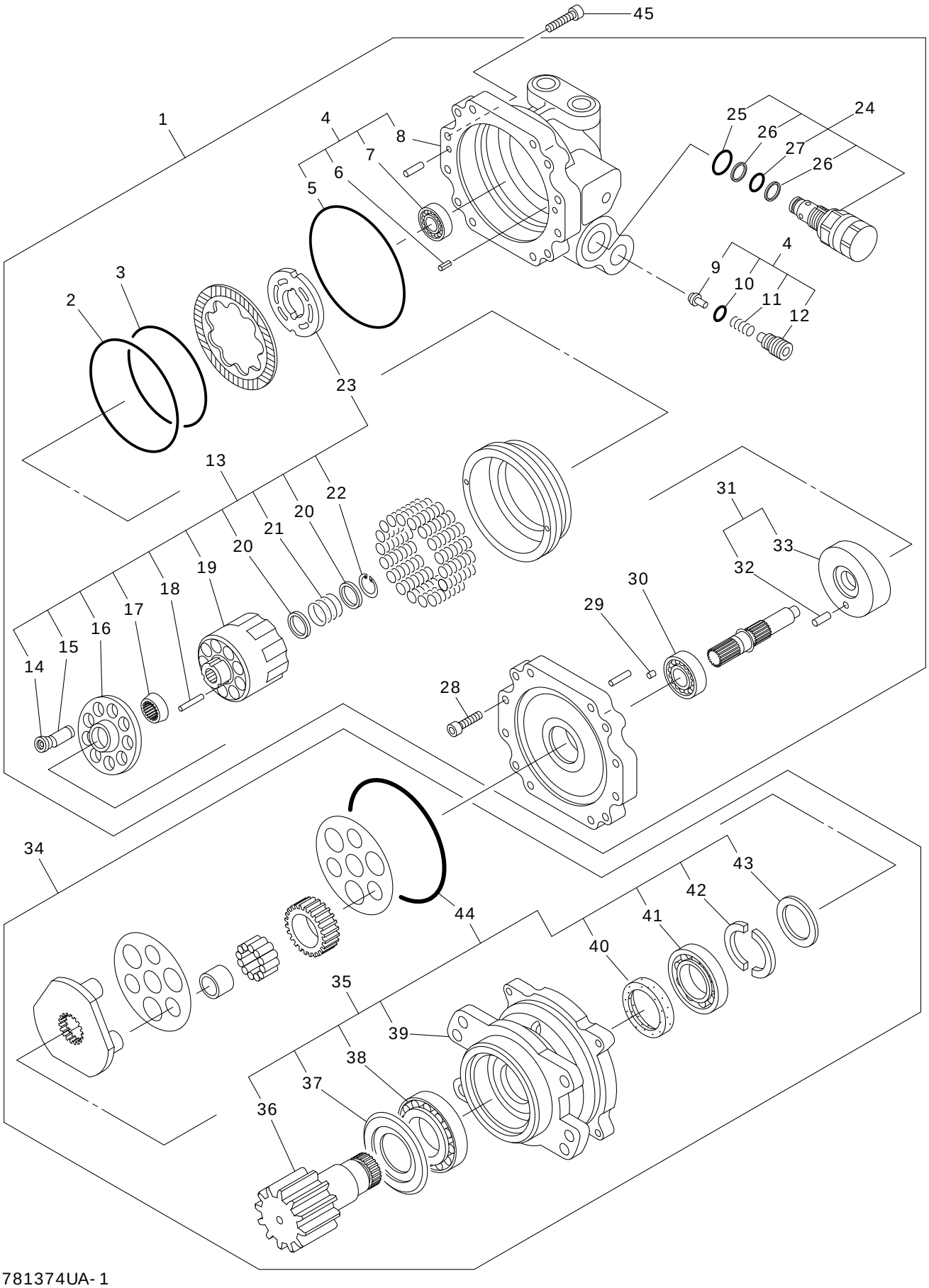

0781374UA-1
0781297UA-1

https://truckmanualshub.com/

KEY No.	SUP.	PART No.	DESCRIPTION	Q'TY	CHAN.	SERIAL No.	REMARKS
0		0781 374 UA	Motor Ass'y, Swing	1		WQ010001-	
1		0781 374 92	* Motor Ass'y	1		WQ010001-	
2		0760 716 25	** Ring, O	1		WQ010001-	G125-90B
3		0760 716 10	** Ring, O	1		WQ010001-	G110-90B
4		0781 297 92	** Body Ass'y	1		WQ010001-	
5		0760 716 40	*** Ring, O	1		WQ010001-	G140-90B
6		0494 608 12	*** Pin, Spring	1		WQ010001-	d=5X12
7		0630 620 10	*** Bearing	1		WQ010001-	#6201
8	×	**** *** **	*** Casing	1		WQ010001-	
9	×	**** *** **	*** Valve, Check	2		WQ010001-	
10		0760 710 12	*** Ring, O	2		WQ010001-	P11-90B
11	×	**** *** **	*** Spring	2		WQ010001-	
12	×	**** *** **	*** Plug	2		WQ010001-	
13		0781 297 93	** Barrel, Cylinder Ass'y	1		WQ010001-	
14	×	**** *** **	*** Shoe	9		WQ010001-	
15	×	**** *** **	*** Piston	9		WQ010001-	
16	×	**** *** **	*** Holder, Shoe	1		WQ010001-	
17	×	**** *** **	*** Holder, Barrel	1		WQ010001-	
18	×	**** *** **	*** Pin	3		WQ010001-	
19	×	**** *** **	*** Barrel, Cylinder	1		WQ010001-	
20	×	**** *** **	*** Retainer	2		WQ010001-	
21	×	**** *** **	*** Spring	1		WQ010001-	
22		0493 500 28	*** Ring, Snap	1		WQ010001-	d=28
23	×	**** *** **	*** Plate, Valve	1		WQ010001-	
24		0781 248 93	** Valve Ass'y, Relief	2		WQ010001-	
25		0760 710 22	*** Ring, O	1		WQ010001-	P22-90B
26		0762 120 16	*** Ring, Back-up	2		WQ010001-	P14-T2
27		0760 710 16	*** Ring, O	1		WQ010001-	P14-90B
28		0562 100 35	** Bolt, Socket Head	8		WQ010001-	M10X35
29		0757 618 20	** Filter	2		WQ010001-	
30		0630 620 44	** Bearing	1		WQ010001-	#6204Z
31		0781 313 92	** Plate Ass'y, Swash	1		WQ010001-	
32		0494 808 15	*** Pin	1		WQ010001-	
33	×	**** *** **	*** Plate, Swash	1		WQ010001-	
34		0781 374 91	* Gear Ass'y, Reduction	1		WQ010001-	
35		0781 374 93	** Pinion Ass'y	1		WQ010001-	
36	×	**** *** **	*** Shaft, Pinion	1		WQ010001-	
37		0781 248 01	*** Ring, Seal	1		WQ010001-	
38	×	**** *** **	*** Bearing	1		WQ010001-	
39	×	**** *** **	*** Body	1		WQ010001-	
40	×	**** *** **	*** Seal Oil	1		WQ010001-	
41	×	**** *** **	*** Bearing	1		WQ010001-	
42	×	**** *** **	*** Collar	2		WQ010001-	
43		0781 248 02	*** Ring	1		WQ010001-	
44		0760 716 35	*** Ring, O	1		WQ010001-	G135-90B
45		0562 080 35	** Bolt, Socket Head	4		WQ010001-	M8X35

https://truckmanualshub.com/

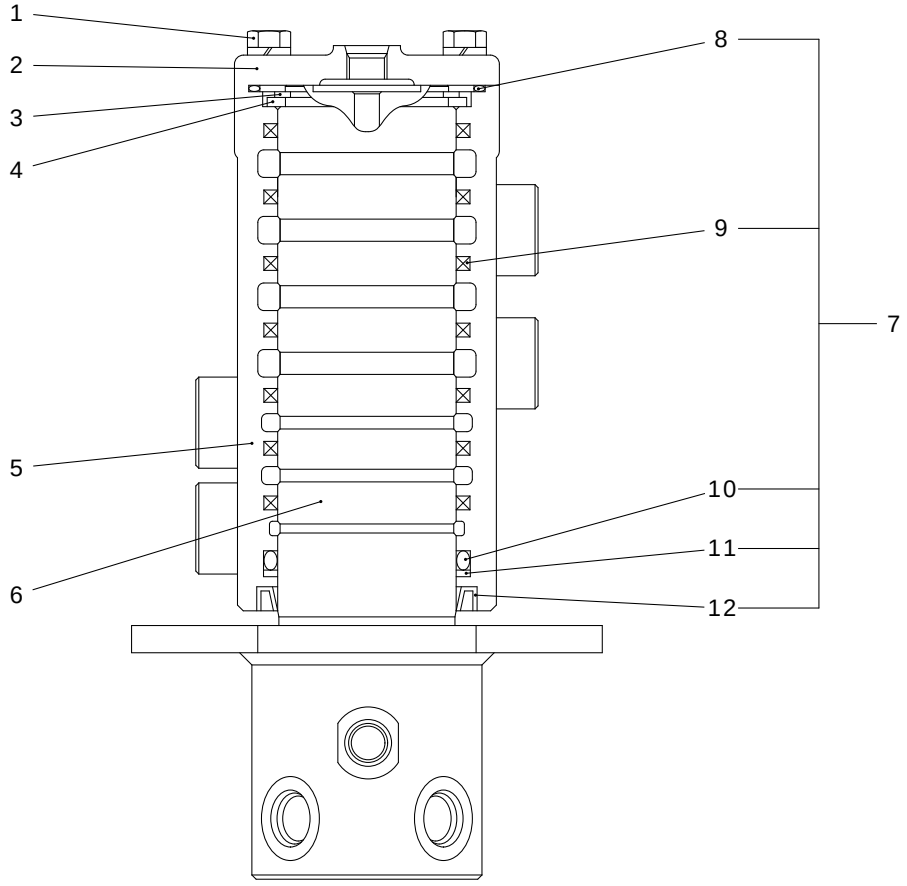

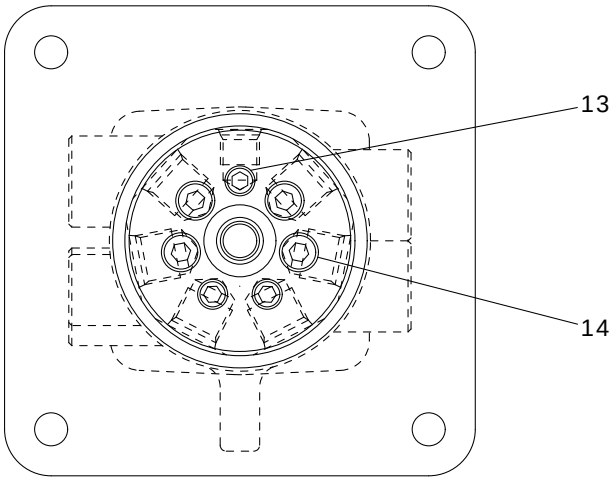

https://truckmanualshub.com/

KEY No.	SUP.	PART No.	DESCRIPTION	Q'TY	CHAN.	SERIAL No.	REMARKS
0		0713 429 UA	Joint Ass'y, Rotary	1		WQ000001-	
1		0519 080 30	* Bolt, Treatment (W/L.W)	4		WQ000001-	M8X30
2		0713 429 04	* Cover	1		WQ000001-	
3		0493 510 55	* Ring, Snap	1		WQ000001-	d=55
4		0755 821 08	* Washer, Thrust	1		WQ000001-	
● 5	×	**** *** **	* Hub	1		WQ000001-	
● 6	×	**** *** **	* Shaft	1		WQ000001-	
7		0713 429 91	* Seal, Kit	1		WQ000001-	
8	×	0760 615 75	** Ring, O	1		WQ000001-	G75-70B
9	×	0783 616 04	** Seal, Oil	7		WQ000001-	
10	×	0760 710 60	** Ring, O	1		WQ000001-	P60-90B
11	×	0762 120 60	** Ring, Back-up	1		WQ000001-	P60-T2
12	×	0713 429 13	** Seal, Dust	1		WQ000001-	
13		0710 201 01	* Plug	3		WQ000001-	PT1/8
14		0710 200 14	* Plug	4		WQ000001-	PT1/4

https://truckmanualshub.com/

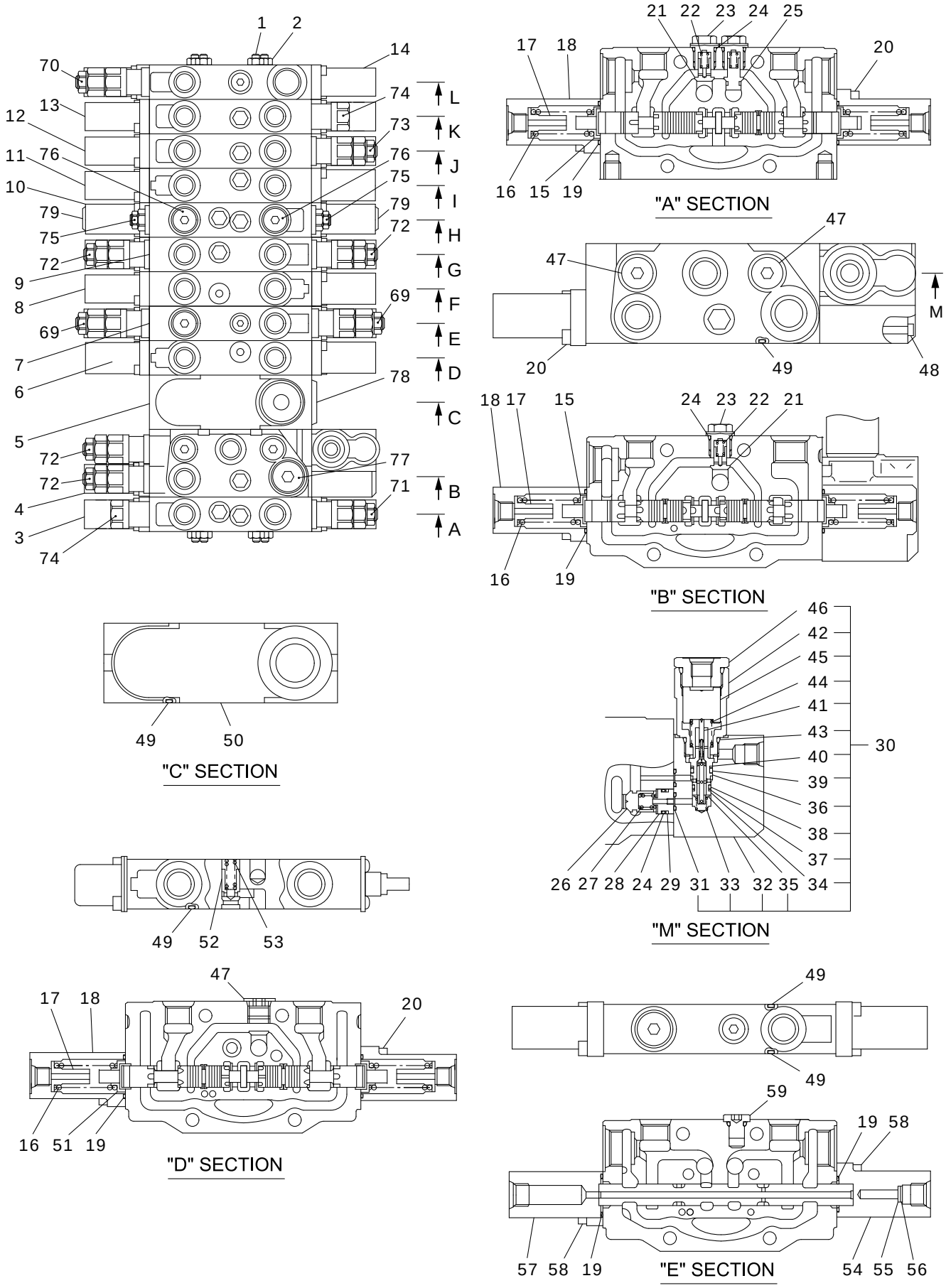

0784017UA-1

https://truckmanualshub.com/

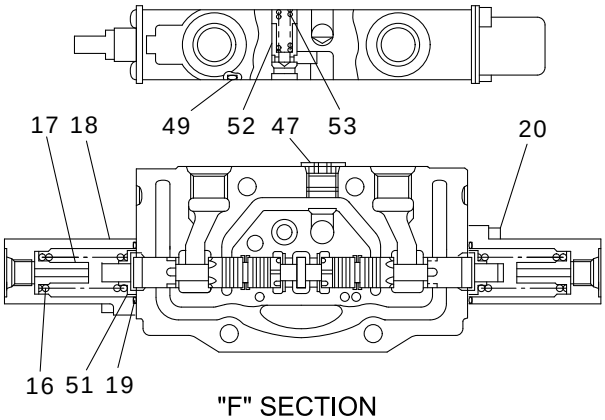

"F" SECTION

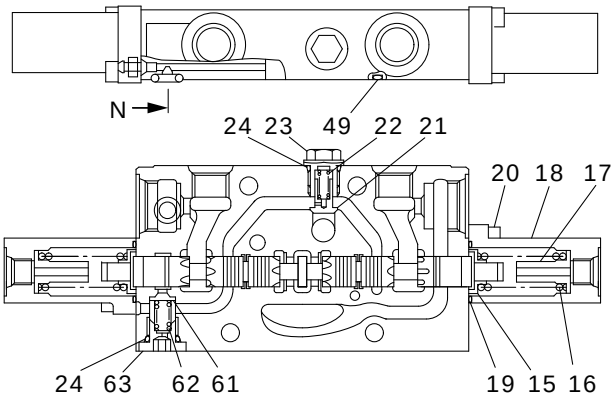

"G" SECTION

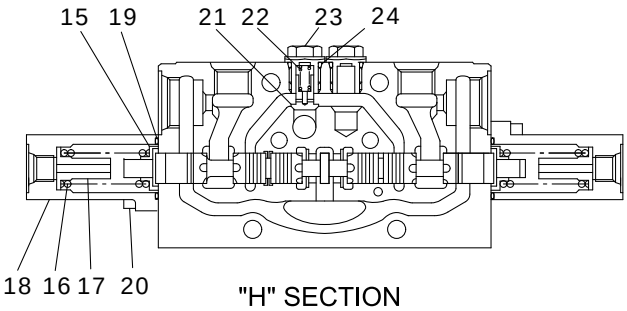

"H" SECTION

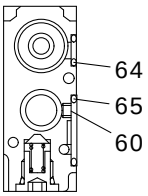

"N" SECTION

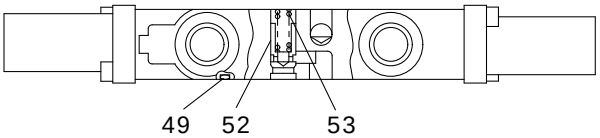

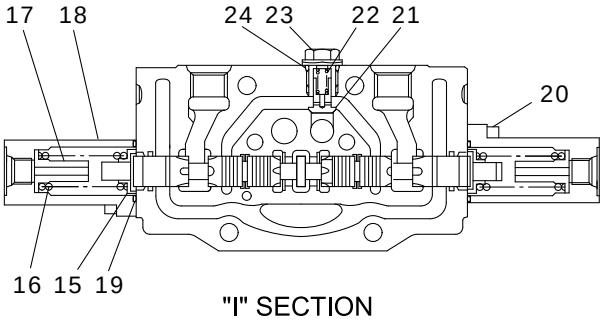

"I" SECTION

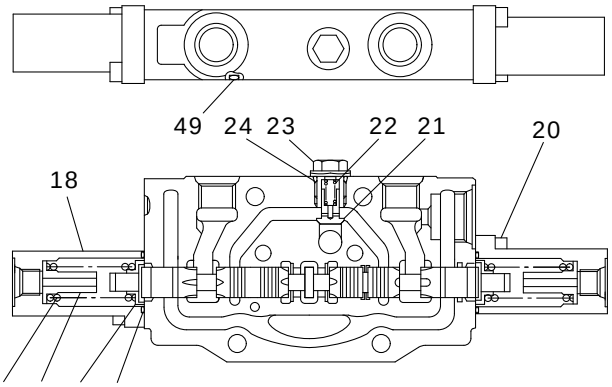

"J" SECTION

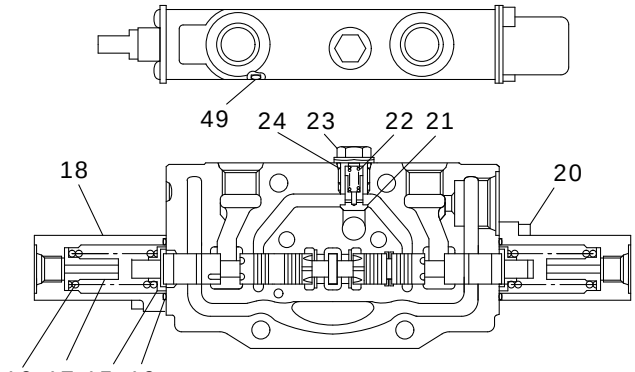

"K" SECTION

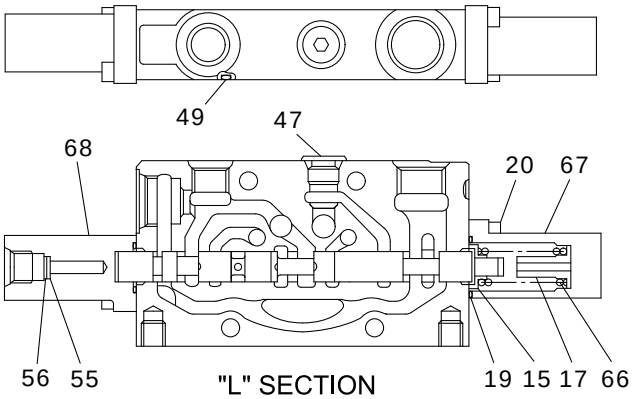

"L" SECTION

0784017UA-2

5

https://truckmanualshub.com/

KEY No.	SUP.	PART No.	DESCRIPTION	Q'TY	CHAN.	SERIAL No.	REMARKS
0		0784 017 UA	Valve Ass'y, Control	1		WQ010001-	
1		0784 017 01	* Rod, Tie	4		WQ010001-	
2		0580 080 00	* Nut, Hex.	8		WQ010001-	M8
3		0784 017 99	* Block Ass'y, Bucket	1		WQ010001-	
4		0784 017 98	* Block Ass'y, Boom	1		WQ010001-	
5		0783 988 83	* Block Ass'y, Outlet	1		WQ010001-	
6		0784 017 97	* Block Ass'y, Traction (R.H.)	1		WQ010001-	
7		0784 017 96	* Block Ass'y, Inlet	1		WQ010001-	
8		0784 017 95	* Block Ass'y, Traction (L.H.)	1		WQ010001-	
9		0784 017 94	* Block Ass'y, Arm	1		WQ010001-	
10		0784 017 93	* Block Ass'y, Spare	1		WQ010001-	
11		0784 017 92	* Block Ass'y, Swing	1		WQ010001-	
12		0784 017 91	* Block Ass'y, Blade	1		WQ010001-	
13		0784 017 90	* Block Ass'y, Boom Swing	1		WQ010001-	
14		0784 017 89	* Block Ass'y	1		WQ010001-	
15		0783 988 01	** Seat, Spring	15		WQ010001-	
16		0783 988 02	** Spring	18		WQ010001-	
17		0783 988 03	** Seat, Spring	19		WQ010001-	
18		0783 988 04	** Cap	17		WQ010001-	
19		0783 988 05	** Ring, O	22		WQ010001-	
20		0562 050 18	** Bolt, Socket Head	38		WQ010001-	M5X18
21		0783 988 06	** Poppet	7		WQ010001-	
22		0783 988 07	** Spring	8		WQ010001-	
23		0783 988 08	** Plug	9		WQ010001-	
24		0760 710 12	** Ring, O	11		WQ010001-	P11-90B
25		0784 017 02	** Poppet	1		WQ010001-	
26		0783 988 10	** Poppet	1		WQ010001-	
27		0783 988 11	** Spring	1		WQ010001-	
28		0783 988 12	** Spacer	1		WQ010001-	
29		0762 120 12	** Ring, Back-up	1		WQ010001-	P11-T2
30		0783 988 83	** Valve Ass'y, Anti Void	1		WQ010001-	
31		0760 710 07	*** Ring, O	2		WQ010001-	P7-90B
32	×	**** *** **	*** Body	1		WQ010001-	
33		0783 677 29	*** Spring	1		WQ010001-	
34		0783 677 23	*** Poppet	1		WQ010001-	
35		0783 677 30	*** Seat, Spring	1		WQ010001-	
36		0783 677 27	*** Sleeve	1		WQ010001-	
37		0762 120 09	*** Ring, Back-up	1		WQ010001-	P9-T2
38		0760 710 09	*** Ring, O	1		WQ010001-	P9-90B
39		0760 710 11	*** Ring, O	1		WQ010001-	P10A-90B
40		0762 120 11	*** Ring, Back-up	1		WQ010001-	P10A-T2
41		0783 677 26	*** Spool	1		WQ010001-	
42		0783 677 24	*** Plug	1		WQ010001-	
43		0753 101 09	*** Ring, O	1		WQ010001-	
44		0783 677 28	*** Spring	1		WQ010001-	
45		0783 749 02	*** Piston	1		WQ010001-	
46		0756 339 80	*** Plug Ass'y	1		WQ010001-	
47		0783 988 13	** Plug Ass'y	5		WQ010001-	
48		0562 060 60	** Bolt, Socket Head	5		WQ010001-	M6X60
49		0783 988 14	** Ring, O	11		WQ010001-	
50		0783 988 15	** Housing, Outlet	1		WQ010001-	
51		0784 017 03	** Seat, Spring	4		WQ010001-	

https://truckmanualshub.com/

KEY No.	SUP.	PART No.	DESCRIPTION	Q'TY	CHAN.	SERIAL No.	REMARKS
52		0783 988 18	** Poppet	3		WQ010001-	
53		0756 865 08	** Spring	3		WQ010001-	
54		0784 017 04	** Cap	1		WQ010001-	
55		0783 988 26	** Filter	2		WQ010001-	
56		0783 988 27	** Washer	2		WQ010001-	
57		0783 988 21	** Cap	1		WQ010001-	
58		0562 050 18	** Bolt, Socket Head	4		WQ010001-	M5X18
59		0783 677 83	** Plug Ass'y	1		WQ010001-	
60		0783 988 22	** Plug, Orifice	1		WQ010001-	
61		0783 677 13	** Poppet	1		WQ010001-	
62		0756 339 17	** Spring	1		WQ010001-	
63		0783 677 14	** Plug	1		WQ010001-	
64		0760 710 10	** Ring, O	1		WQ010001-	P10-90B
65		0760 710 20	** Ring, O	1		WQ010001-	P20-90B
66		0783 988 24	** Spring	1		WQ010001-	
67		0783 988 20	** Cap	1		WQ010001-	
68		0784 017 04	** Cap	1		WQ010001-	
69		0784 017 88	* Valve Ass'y, Main Relief	2		WQ010001-	
69-1		0760 319 10	** Ring, O	1		WQ010001-	910-90B
70		0784 017 87	* Valve Ass'y, Relief	1		WQ010001-	
70-1		0760 319 10	** Ring, O	1		WQ010001-	910-90B
71		0783 677 84	* Valve Ass'y, Relief	1		WQ010001-	
71-1		0760 319 10	** Ring, O	1		WQ010001-	910-90B
72		0784 017 86	* Valve Ass'y, Relief	4		WQ010001-	
72-1		0760 319 10	** Ring, O	1		WQ010001-	910-90B
73		0783 988 85	* Valve Ass'y, Relief	1		WQ010001-	
73-1		0760 319 10	** Ring, O	1		WQ010001-	910-90B
74		0783 846 88	* Valve Ass'y, Anti Void	2		WQ010001-	
74-1		0760 319 10	** Ring, O	1		WQ010001-	910-90B
75		0783 646 85	* Valve Ass'y, Shut-off	2		WQ010001-	
75-1		0785 640 UA	** Valve Ass'y, Relief	2		WQ010001-	Option 13.7MPa-50L
75-2		0785 641 UA	** Valve Ass'y, Relief	2		WQ010001-	Option 17.2MPa-40L
75-3		0760 319 10	** Ring, O	1		WQ010001-	910-90B
76		0783 646 83	* Plug Ass'y	2		WQ010001-	
76-1		0760 710 16	** Ring, O	1		WQ010001-	P14-90B
77		0783 646 84	* Plug Ass'y	1		WQ010001-	
77-1		0760 710 19	** Ring, O	1		WQ010001-	P18-90B
78		0783 988 29	* Plug Ass'y	1		WQ010001-	
79		0783 988 13	* Plug Ass'y	1		WQ010001-	

5

https://truckmanualshub.com/

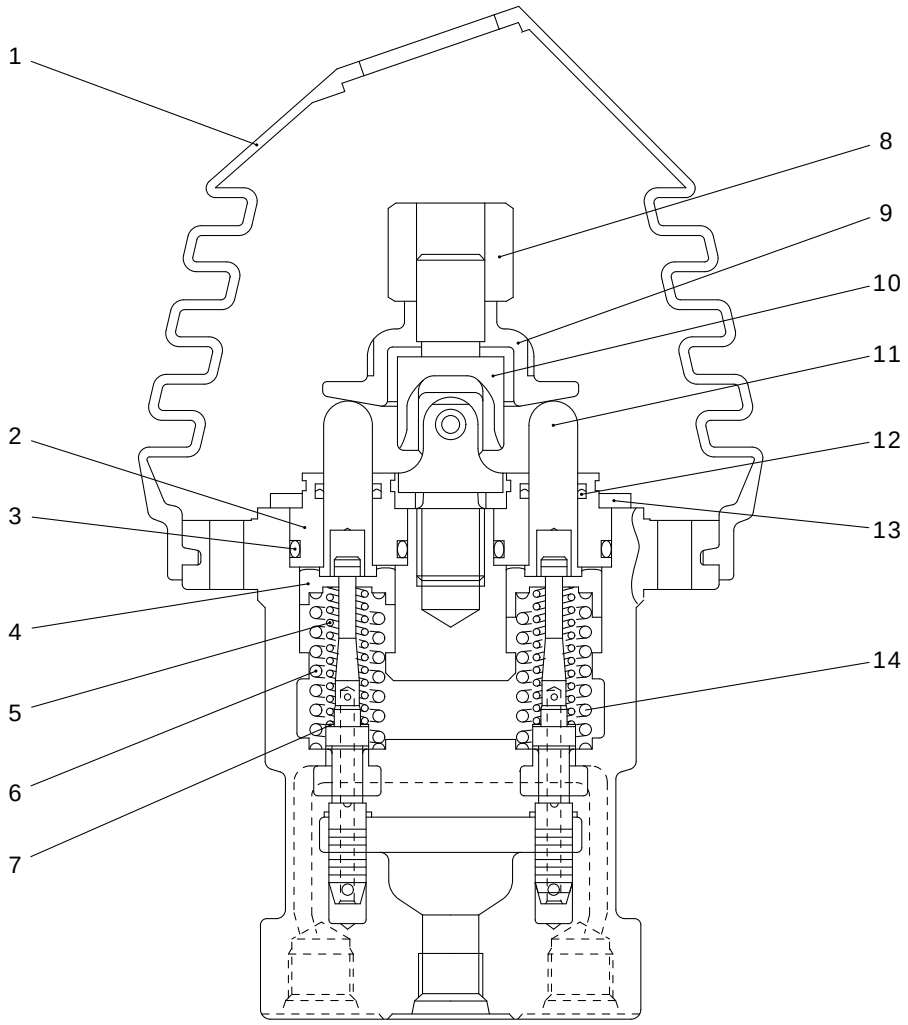

0783964UA-1
0783941UA-1

https://truckmanualshub.com/

KEY No.	SUP.	PART No.	DESCRIPTION	Q'TY	CHAN.	SERIAL No.	REMARKS
0		0783 964 UA	Valve Ass'y, Remote Control	2		WQ010001-	
1		0783 771 07	* Boot	1		WQ010001-	
2		0756 735 09	* Plug	4		WQ010001-	
3		0760 710 20	* Ring, O	4		WQ010001-	P20-90B
4		0783 700 08	* Seat, Spring	4		WQ010001-	
5		0783 964 01	* Spring	4		WQ010001-	
6		0783 700 09	* Spring (No.2, 4, Ports)	2		WQ010001-	
7		0756 735 15	* Washer	4		WQ010001-	
8		0783 771 03	* Nut, Adjusting	1		WQ010001-	
9		0783 700 12	* Plate	1		WQ010001-	
10		0756 303 07	* Joint	1		WQ010001-	
11		0756 744 11	* Rod, Push	4		WQ010001-	
12		0756 611 13	* Seal	4		WQ010001-	
13		0783 756 01	* Plate	1		WQ010001-	
14		0783 700 10	* Spring (No.1, 3, Ports)	2		WQ010001-	

https://truckmanualshub.com/

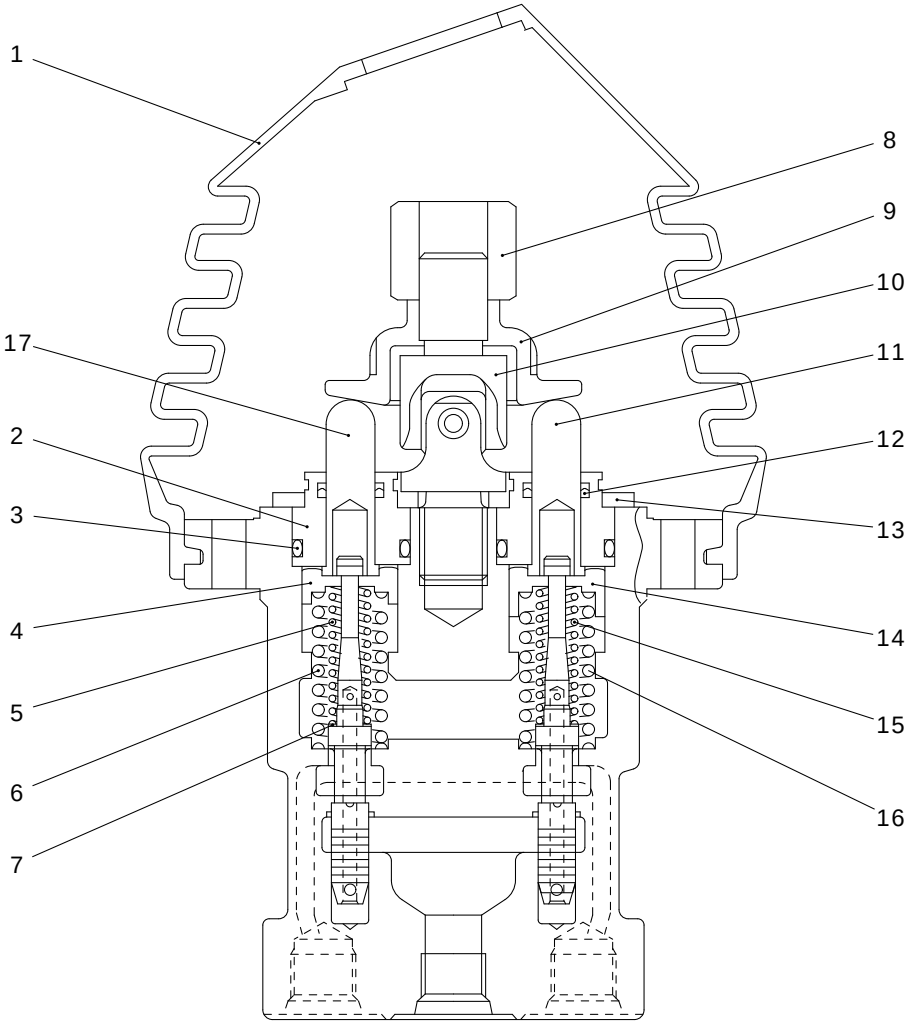

0784127UA-1

https://truckmanualshub.com/

KEY No.	SUP.	PART No.	DESCRIPTION	Q'TY	CHAN.	SERIAL No.	REMARKS
0		0784 127 UA	Valve Ass'y, Remote Control	1		***-	
1		0783 771 07	* Boot	1		***-	
2		0756 735 09	* Plug	4		***-	
3		0760 710 20	* Ring, O	4		***-	P20-90B
4		0784 127 02	* Seat, Spring (No.2, 4, Ports)	2		***-	
5		0784 127 03	* Spring (No.2, 4, Ports)	2		***-	
6		0783 700 09	* Spring (No.2, 4, Ports)	2		***-	
7		0756 735 15	* Washer	4		***-	
8		0783 771 03	* Nut, Adjusting	1		***-	
9		0783 700 12	* Plate	1		***-	
10		0756 303 07	* Joint	1		***-	
11		0756 744 11	* Rod, Push (No.1, 3, Ports)	2		***-	
12		0756 611 13	* Seal	4		***-	
13		0783 756 01	* Plate	1		***-	
14		0783 700 08	* Seat, Spring (No.1, 3, Ports)	2		***-	
15		0783 964 01	* Spring (No.1, 3, Ports)	2		***-	
16		0783 700 10	* Spring (No.1, 3, Ports)	2		***-	
17		0784 127 01	* Rod, Push (No.2, 4, Ports)	2		***-	

https://truckmanualshub.com/

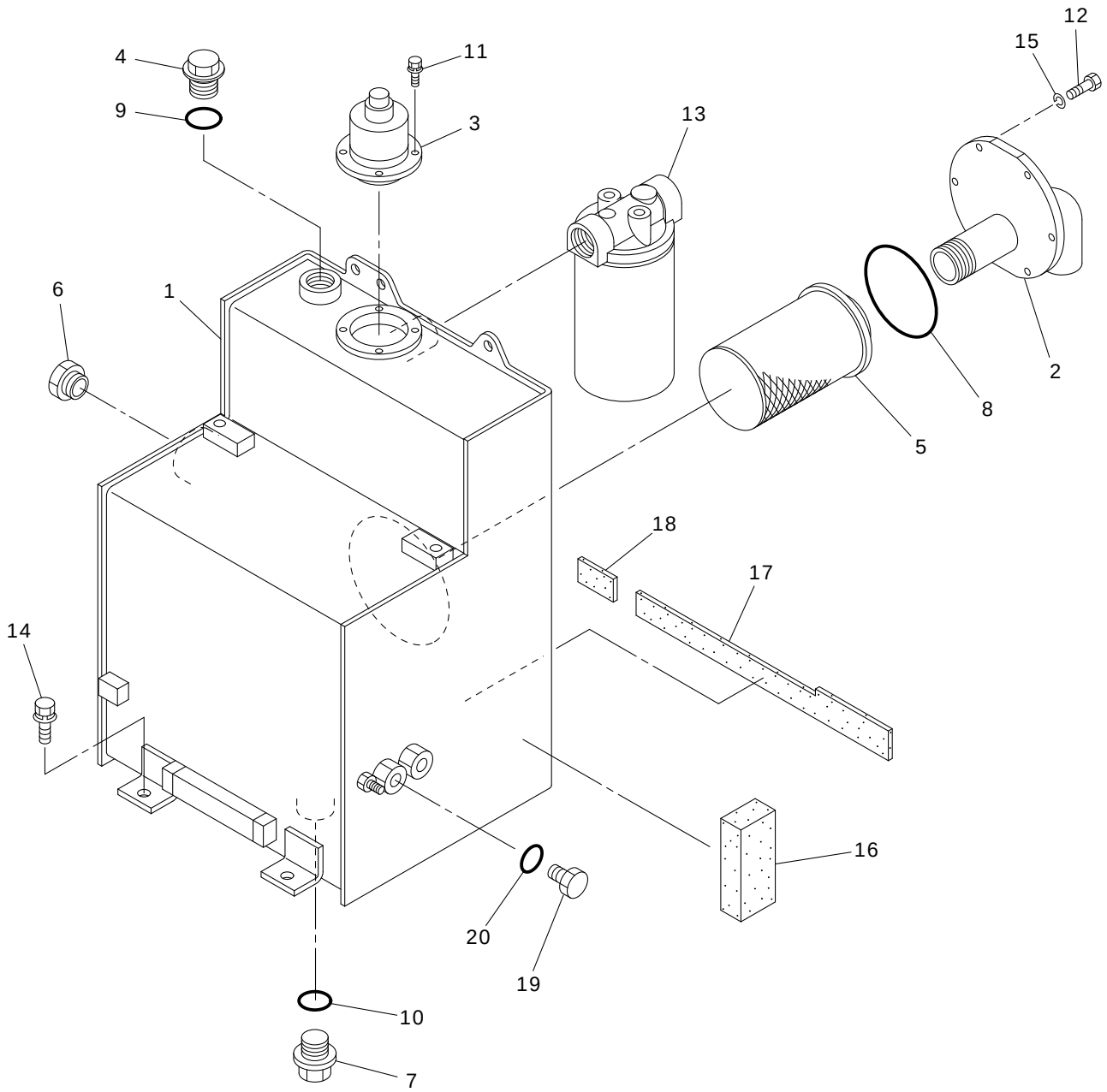

25V4-050600-1

IHI

HYDRAULIC OIL TANK ASS'Y

MODEL 25V4

SHEET No 5-6

5

https://truckmanualshub.com/

KEY No.	SUP.	PART No.	DESCRIPTION	Q'TY	CHAN.	SERIAL No.	REMARKS
0	×	F342 638 00	Tank Ass'y, Hydraulic Oil	1		WQ010001-	
1	△	D284 240 00	* Tank, Hydraulic Oil	1		WQ010001-* * *	
1	△	D284 247 00	* Tank, Hydraulic Oil	1	×	* * *-	
2		D286 252 00	* Tube	1		WQ010001-	
3		0787 305 UA	* Breather, Air	1		WQ010001-	
4		4072 887 00	* Plug	1		WQ010001-	
5		0755 179 UA	* Strainer, Suction	1		WQ010001-	
6		4079 027 00	* Gauge, Level	1		WQ010001-	
7		4077 036 00	* Plug, Drain	1		WQ010001-	
8		0760 711 25	* Ring, O	1		WQ010001-	P125-90B
9		0760 710 30	* Ring, O	1		WQ010001-	P29-90B
10		0760 312 11	* Ring, O	1		WQ010001-	211-90B
11		0517 060 16	* Bolt, Treatment (W/L.W, F.W)	4		WQ010001-	M6X16
12		0513 100 20	* Bolt, Treatment	6		WQ010001-	M10X20
13		0759 144 UA	* Filter Ass'y, Return	1		WQ010001-	
13-1		0759 144 01	** Cartridge Ass'y	1		WQ010001-	
14		0518 120 25	* Bolt, Treatment (W/L.W, F.W)	4		WQ010001-	M12X25 P=1.25
15		0590 100 00	* Washer, Lock	6		WQ010001-	M10
16		D493 551 00	* Panel, Sponge	1		WQ010001-	
17		D493 552 00	* Panel, Sponge	1		WQ010001-	
18		D493 553 00	* Panel, Sponge	1		WQ010001-	
19		0710 212 04	* Plug	1		WQ010001-	
20		0760 710 12	* Ring, O	1		WQ010001-	P11-90B

5

https://truckmanualshub.com/

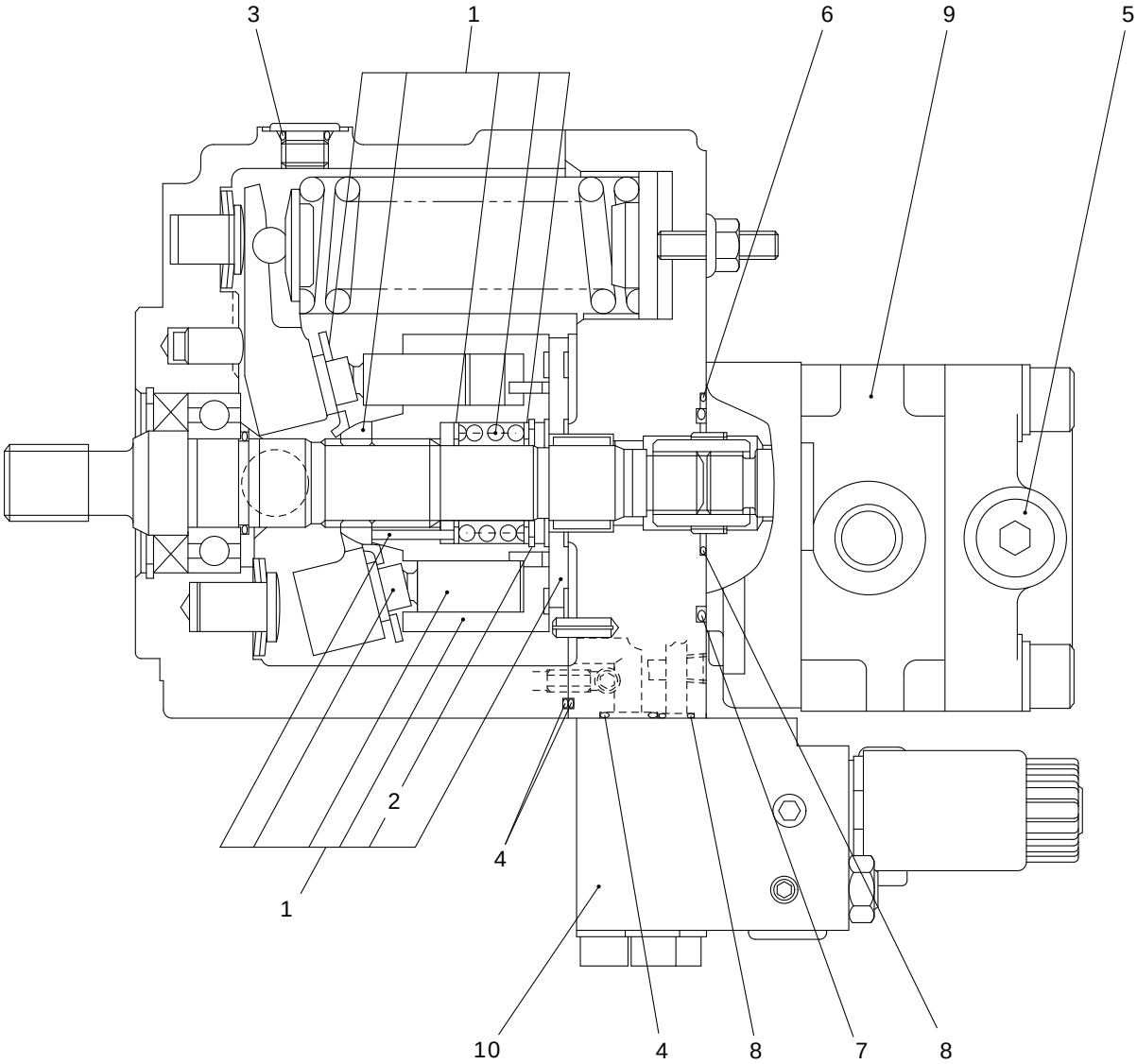

5

0780163UA-1

IHI

OIL PUMP ASS'Y

MODEL 25V4

SHEET No 5-7

https://truckmanualshub.com/

KEY No.	SUP.	PART No.	DESCRIPTION	Q'TY	CHAN.	SERIAL No.	REMARKS
0		0780 163 UA	Pump Ass'y, Oil	1		WQ010001-	
1		0780 163 91	* Cylinder Ass'y	1		WQ010001-	
2		0493 500 34	** Ring, Snap	1		WQ010001-	d=34
3		0760 710 12	* Ring, O	1		WQ010001-	P11-90B
4		0760 710 14	* Ring, O	3		WQ010001-	P12-90B
5		0760 710 16	* Ring, O	1		WQ010001-	P14-90B
6		0760 710 07	* Ring, O	1		WQ010001-	P7-90B
7		0760 715 55	* Ring, O	1		WQ010001-	G55-90B
8		0760 710 08	* Ring, O	2		WQ010001-	P8-90B
9		0780 072 91	* Pump Ass'y, Gear	1		WQ010001-	
10		0780 163 92	* Valve, Ass'y	1		WQ010001-	

5

https://truckmanualshub.com/

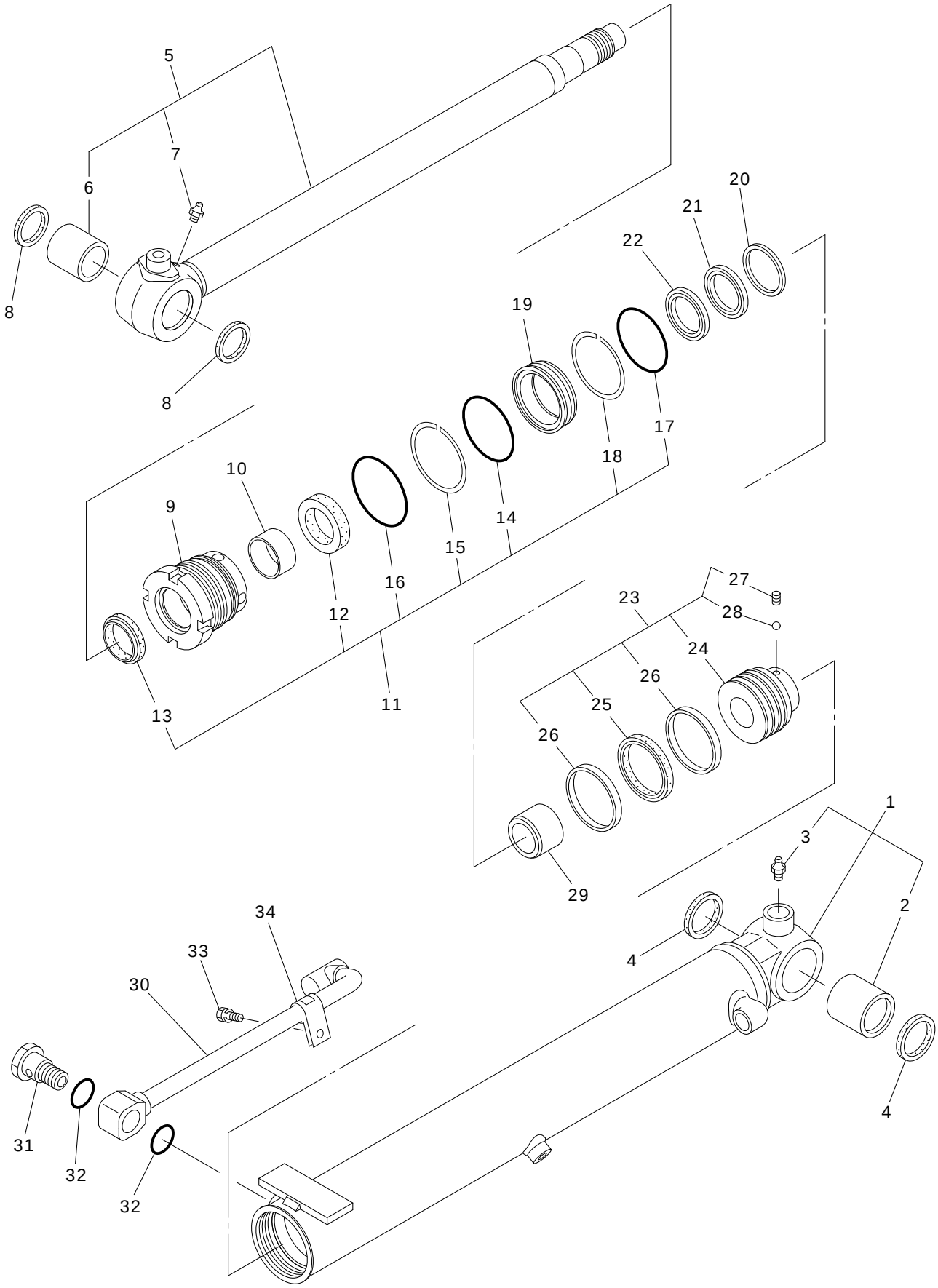

0782612UA-1

IHI

BOOM CYLINDER ASS'Y

MODEL 25V4

SHEET No 5-8

5

https://truckmanualshub.com/

KEY No.	SUP.	PART No.	DESCRIPTION	Q'TY	CHAN.	SERIAL No.	REMARKS
0		0782 612 UA	Cylinder Ass'y, Boom	1		WQ010001-	
1	×	**** *** **	* Tube Ass'y, Cylinder	1		WQ010001-	
2		0758 891 04	** Bushing	1		WQ010001-	
3		0728 111 15	** Nipple, Grease	1		WQ010001-	PT1/8
4		0752 239 24	* Seal, Dust	2		WQ010001-	
5		0782 612 02	* Rod Ass'y, Piston	1		WQ010001-	
6		0758 799 07	** Bushing	1		WQ010001-	
7		0728 111 15	** Nipple, Grease	1		WQ010001-	PT1/8
8		0752 686 21	* Seal, Dust	2		WQ010001-	
9		0782 368 03	* Head, Cylinder	1		WQ010001-	
10		0782 367 13	* Bushing	1		WQ010001-	
11		0782 465 91	* Kit, Seal	1		WQ010001-	
12	×	0752 765 05	** Ring, U	1		WQ010001-	
13	×	0758 858 02	** Ring, Wiper	1		WQ010001-	
14	×	0760 715 65	** Ring, O	1		WQ010001-	G65-90B
15	×	0782 396 05	** Ring, Back-up	1		WQ010001-	
16	×	0760 715 70	** Ring, O	1		WQ010001-	G70-90B
17	×	0760 715 65	** Ring, O	1		WQ010001-	G65-90B
18	×	0782 465 07	** Ring, Back-up	1		WQ010001-	
19		0782 465 03	* Holder	1		WQ010001-	
20		0782 465 04	* Spacer	1		WQ010001-	
21		0782 465 05	* Seal, Cushion	1		WQ010001-	
22		0782 465 06	* Collar	1		WQ010001-	
23		0782 368 93	* Piston Ass'y	1		WQ010001-	
24	×	**** *** **	** Piston	1		WQ010001-	
25		0752 928 07	** Ring Ass'y, Seal	1		WQ010001-	
26		0782 396 07	** Ring, Slide	2		WQ010001-	
27		0561 080 08	** Screw, Set	1		WQ010001-	M8X8
28		0751 901 25	** Ball, Steel	1		WQ010001-	d=7/32
29		0782 612 06	* Bearing, Cushion	1		WQ010001-	
30		0782 612 07	* Pipe	1		WQ010001-	
31		0782 446 05	* Plug	1		WQ010001-	
32		0760 710 23	* Ring, O	2		WQ010001-	P22A-90B
33		0782 446 06	* Bolt	1		WQ010001-	
34		0782 431 21	* Holder, Pipe	1		WQ010001-	

5

https://truckmanualshub.com/

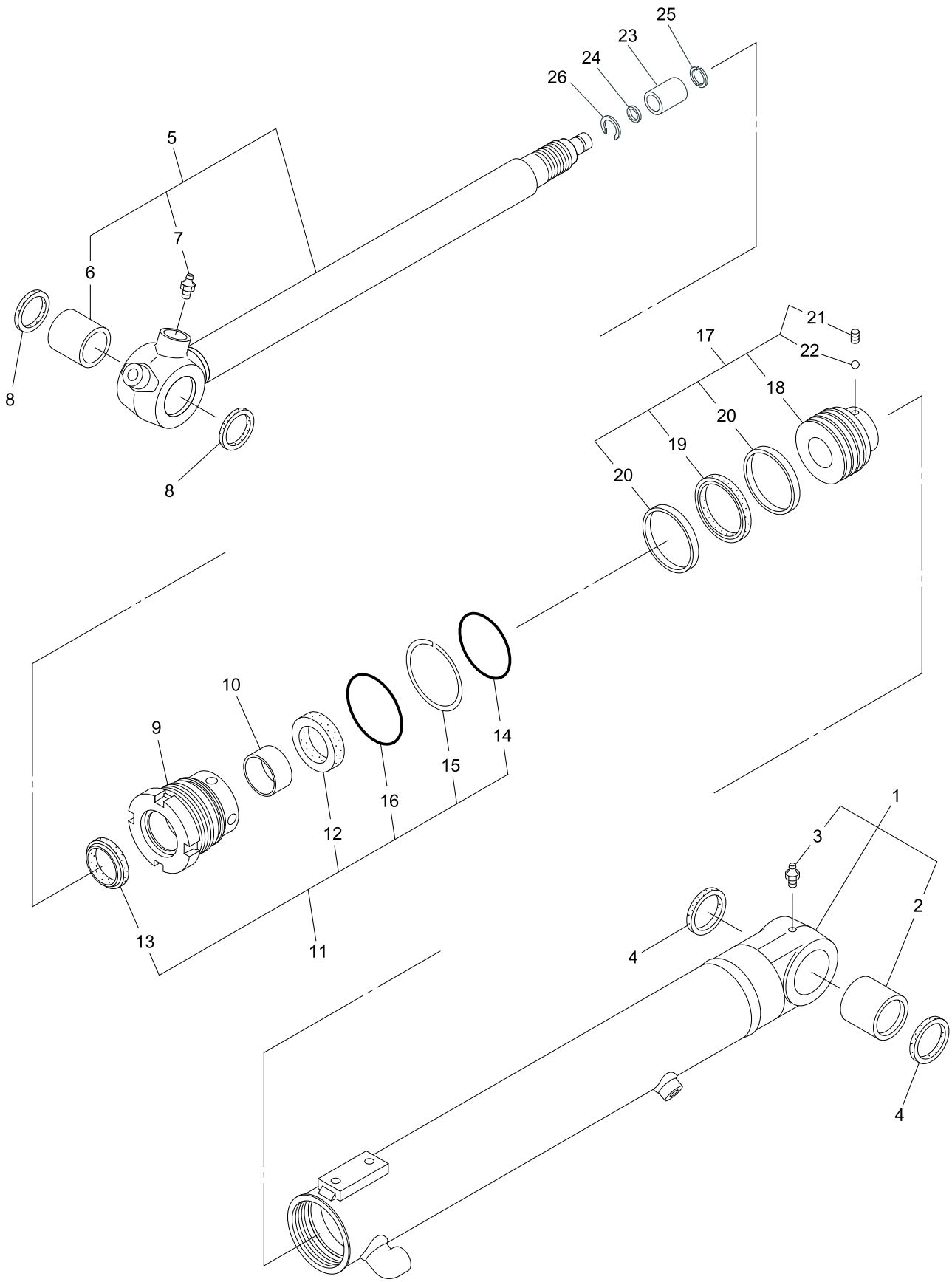

0782610UA-1

IHI

ARM CYLINDER ASS'Y

MODEL 25V4

SHEET No 5-9

5

https://truckmanualshub.com/

KEY No.	SUP.	PART No.	DESCRIPTION	Q'TY	CHAN.	SERIAL No.	REMARKS
0		0782 610 UA	Cylinder Ass'y, Arm	1		WQ010001-	
1	×	**** *** **	* Tube Ass'y, Cylinder	1		WQ010001-	
2		0758 799 07	** Bushing	1		WQ010001-	
3		0728 111 65	** Nipple, Grease	1		WQ010001-	PT1/8X90
4		0752 686 21	* Seal, Dust	2		WQ010001-	
5		0782 610 02	* Rod Ass'y, Piston	1		WQ010001-	
6		0758 799 07	** Bushing	1		WQ010001-	
7		0728 111 15	** Nipple, Grease	1		WQ010001-	PT1/8
8		0752 686 21	* Seal, Dust	2		WQ010001-	
9		0782 368 03	* Head, Cylinder	1		WQ010001-	
10		0782 367 13	* Bushing	1		WQ010001-	
11		0782 368 91	* Kit, Seal	1		WQ010001-	
12	×	0752 765 05	** Ring, U	1		WQ010001-	
13	×	0758 858 02	** Ring, Wiper	1		WQ010001-	
14	×	0760 715 65	** Ring, O	1		WQ010001-	G65-90B
15	×	0782 396 05	** Ring, Back-up	1		WQ010001-	
16	×	0760 715 70	** Ring, O	1		WQ010001-	G70-90B
17		0782 368 93	* Piston Ass'y	1		WQ010001-	
18	×	**** *** **	** Piston	1		WQ010001-	
19		0752 928 07	** Ring Ass'y, Seal	1		WQ010001-	
20		0782 396 07	** Ring, Slide	2		WQ010001-	
21		0561 080 08	** Screw, Set	1		WQ010001-	M8X8
22		0751 901 25	** Ball, Steel	1		WQ010001-	d=7/32
23		0782 464 03	* Bearing, Cushion	1		WQ010001-	
24		0785 697 19	* Seal, Cushion	1		WQ010001-	
25		0758 697 21	* Stopper	2		WQ010001-	
26		0758 697 20	** Ring, Snap	1		WQ010001-	

5

https://truckmanualshub.com/

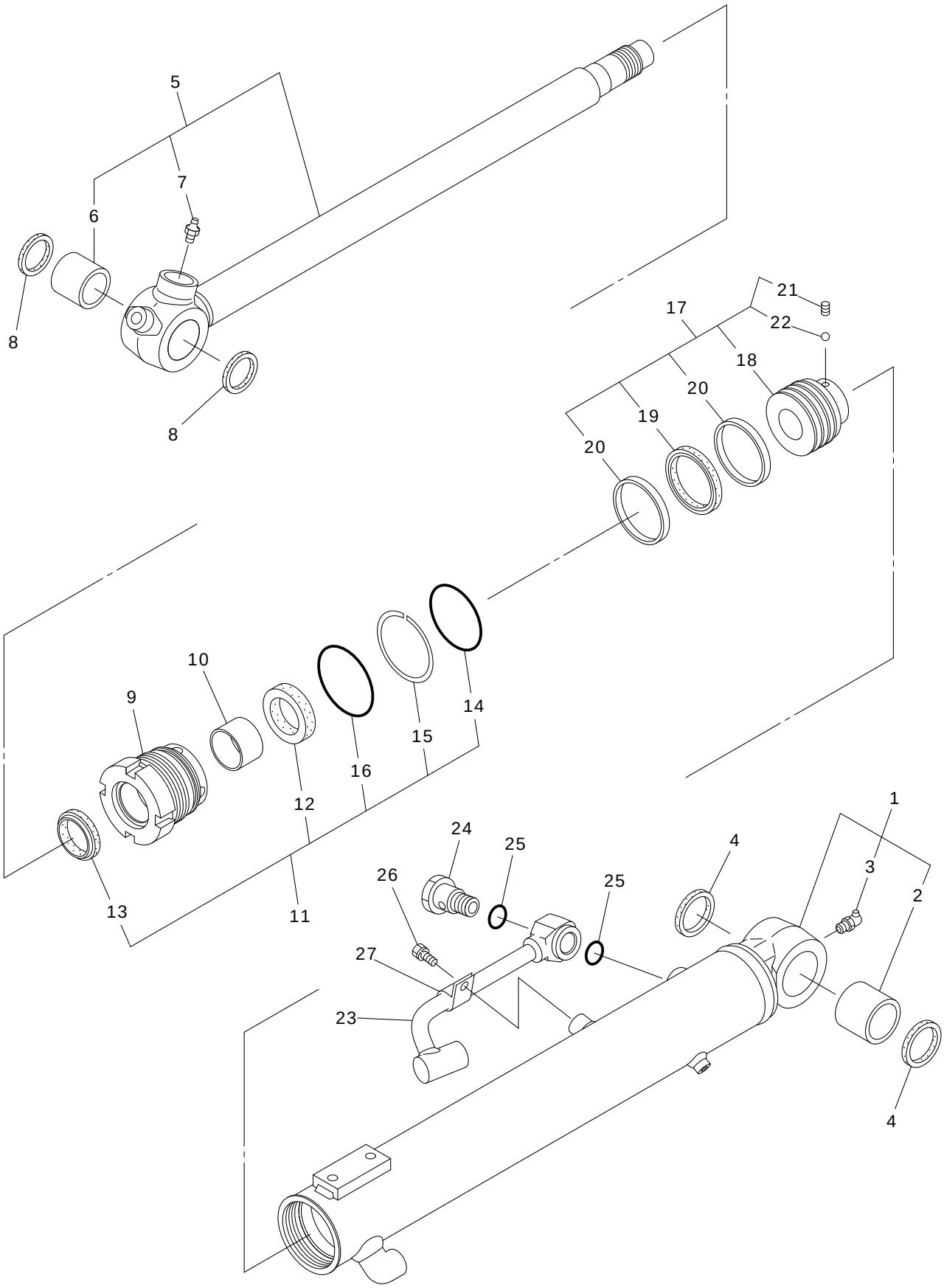

0782611UA-1

IHI

BUCKET CYLINDER ASS'Y

MODEL 25V4

SHEET No 5-10

https://truckmanualshub.com/

KEY No.	SUP.	PART No.	DESCRIPTION	Q'TY	CHAN.	SERIAL No.	REMARKS
0		0782 611 UA	Cylinder Ass'y, Bucket	1		WQ010001-	
1	×	**** *** **	* Tube Ass'y, Cylinder	1		WQ010001-	
2		0782 105 03	** Bushing	1		WQ010001-	
3		0728 111 65	** Nipple, Grease	1		WQ010001-	PT1/8X90
4		0752 686 21	* Seal, Dust	2		WQ010001-	
5		0782 611 02	* Rod Ass'y, Piston	1		WQ010001-	
6		0782 105 03	** Bushing	1		WQ010001-	
7		0728 111 15	** Nipple, Grease	1		WQ010001-	PT1/8
8		0752 686 21	* Seal, Dust	2		WQ010001-	
9		0782 611 03	* Head, Cylinder	1		WQ010001-	
10		0782 287 13	* Bushing	1		WQ010001-	
11		0782 376 91	* Kit, Seal	1		WQ010001-	
12	×	0782 376 04	** Ring, U	1		WQ010001-	
13	×	0758 857 06	** Ring, Wiper	1		WQ010001-	
14	×	0760 715 55	** Ring, O	1		WQ010001-	G55-90B
15	×	0782 376 05	** Ring, Back-up	1		WQ010001-	
16	×	0760 715 60	** Ring, O	1		WQ010001-	G60-90B
17		0782 376 93	* Piston Ass'y	1		WQ010001-	
18	×	**** *** **	** Piston	1		WQ010001-	
19		0752 949 07	** Ring Ass'y, Seal	1		WQ010001-	
20		0782 376 07	** Ring, Slide	2		WQ010001-	
21		0561 060 06	** Screw, Set	1		WQ010001-	M6X6
22		0609 010 10	** Ball, Steel	1		WQ010001-	d=5/32
23		0782 611 05	* Pipe	1		WQ010001-	
24		0782 446 05	* Plug	1		WQ010001-	
25		0760 710 23	* Ring, O	2		WQ010001-	P22A-90B
26		0782 446 06	* Bolt	1		WQ010001-	
27		0782 431 21	* Holder, Pipe	1		WQ010001-	

5

https://truckmanualshub.com/

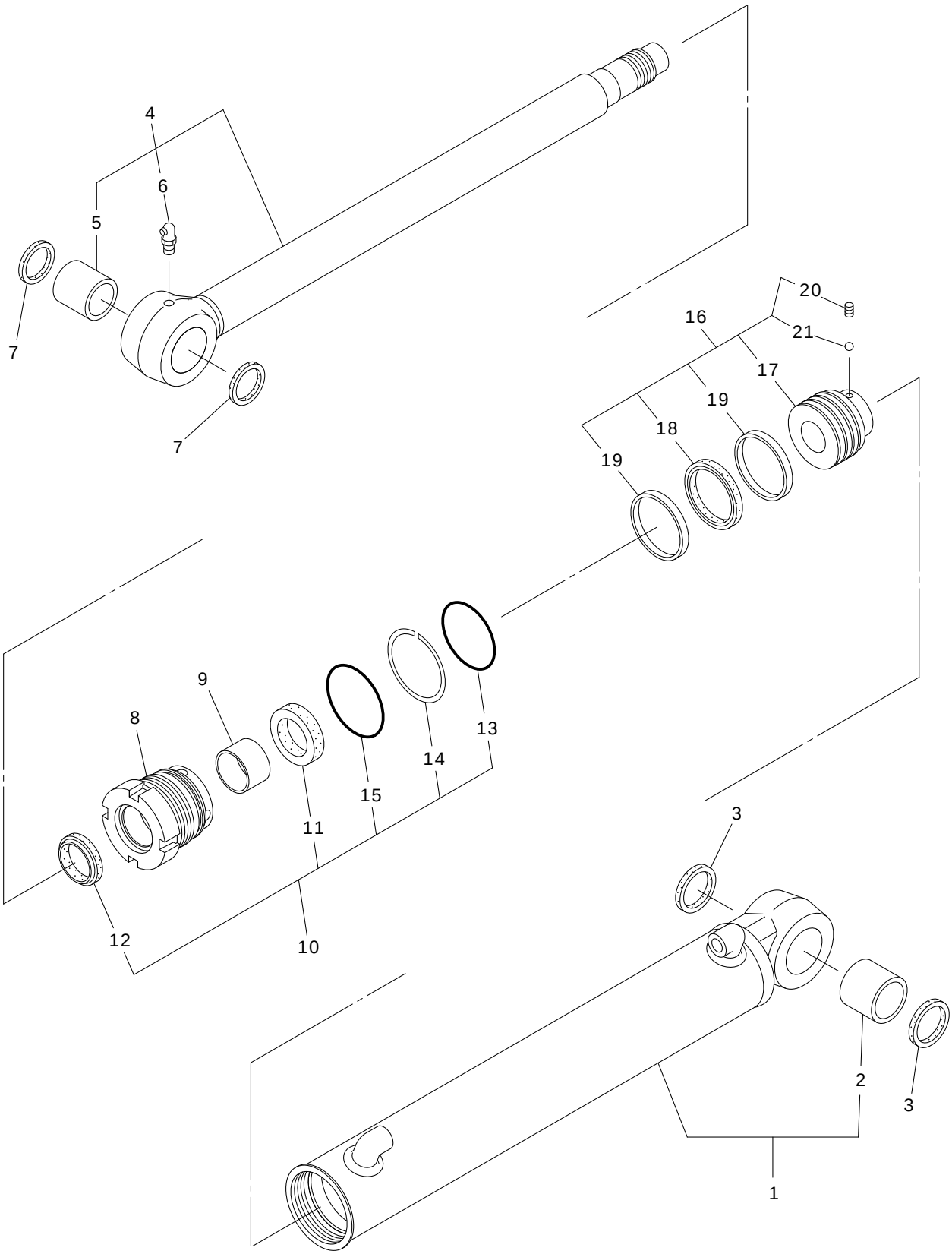

5

0782613UA-1

IHI

BOOM SWING CYLINDER ASS'Y

MODEL 25V4

SHEET No 5-11

https://truckmanualshub.com/

KEY No.	SUP.	PART No.	DESCRIPTION	Q'TY	CHAN.	SERIAL No.	REMARKS
0		0782 613 UA	Cylinder Ass'y, Boom Swing	1		WQ010001-	
1	×	**** *** **	* Tube Ass'y, Cylinder	1		WQ010001-	
2		0752 393 22	** Bushing	1		WQ010001-	
3		0752 686 21	* Seal, Dust	2		WQ010001-	
4		0782 613 02	* Rod Ass'y, Piston	1		WQ010001-	
5		0752 393 22	** Bushing	1		WQ010001-	
6		0728 111 65	** Nipple, Grease	1		WQ010001-	PT1/8X90
7		0752 686 21	* Seal, Dust	2		WQ010001-	
8		0782 445 03	* Head, Cylinder	1		WQ010001-	
9		0782 287 13	* Bushing	1		WQ010001-	
10		0782 445 91	* Kit, Seal	1		WQ010001-	
11	×	0782 376 04	** Ring, U	1		WQ010001-	
12	×	0758 857 06	** Ring, Wiper	1		WQ010001-	
13	×	0760 715 60	** Ring, O	1		WQ010001-	G60-90B
14	×	0782 367 05	** Ring, Back-up	1		WQ010001-	
15	×	0760 715 65	** Ring, O	1		WQ010001-	G65-90B
16		0782 445 93	* Piston Ass'y	1		WQ010001-	
17	×	**** *** **	** Piston	1		WQ010001-	
18		0752 775 13	** Ring Ass'y, Seal	1		WQ010001-	
19		0782 367 07	** Ring, Slide	2		WQ010001-	
20		0561 060 06	** Screw, Set	1		WQ010001-	M6X6
21		0609 010 10	** Ball, Steel	1		WQ010001-	d=5/32

5

https://truckmanualshub.com/

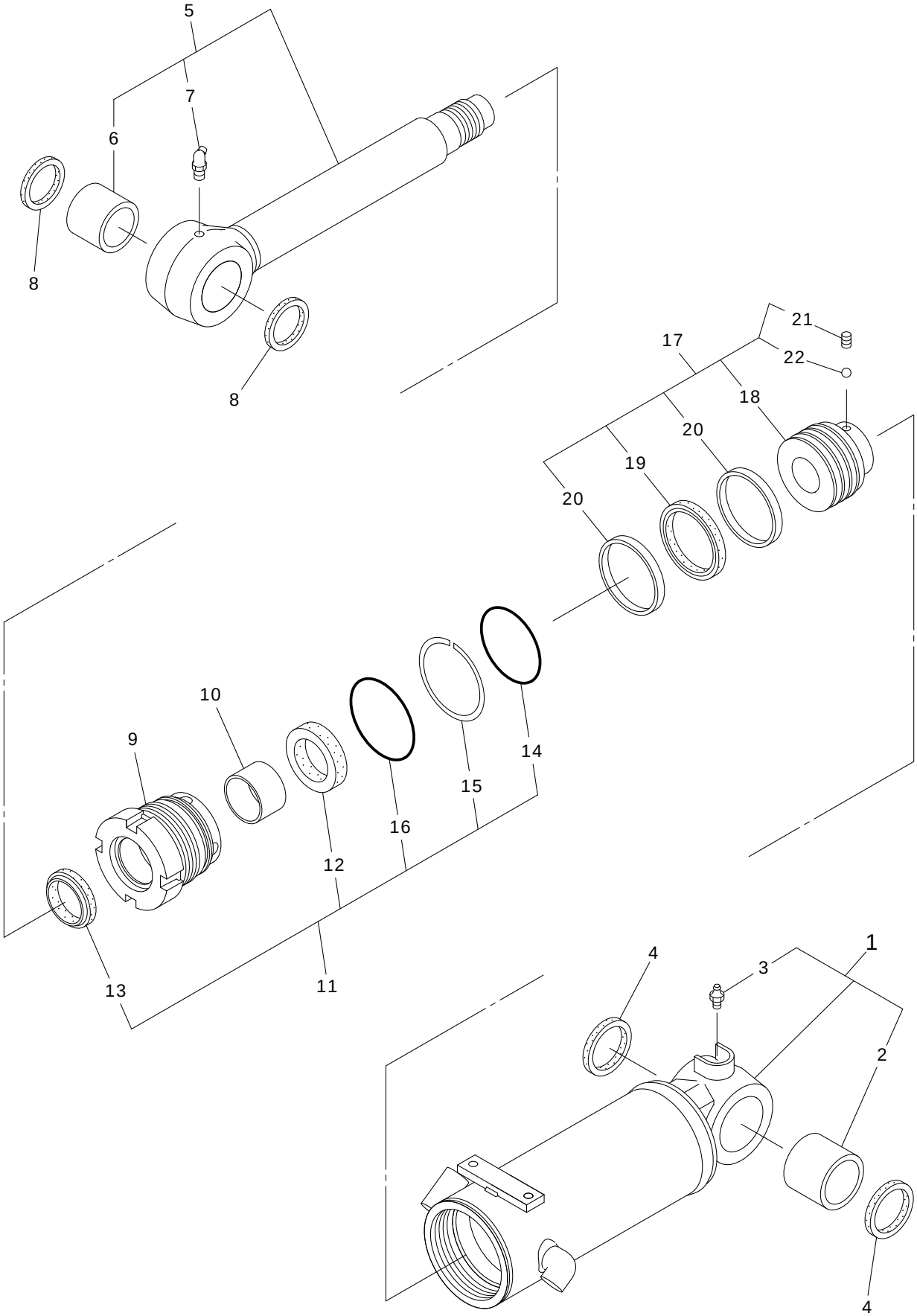

0782609UA-1

IHI

BLADE CYLINDER ASS'Y

MODEL 25V4

SHEET No 5-12

https://truckmanualshub.com/

KEY No.	SUP.	PART No.	DESCRIPTION	Q'TY	CHAN.	SERIAL No.	REMARKS
0		0782 609 UA	Cylinder Ass'y, Blade	1		WQ010001-	
1	×	**** *** **	* Tube Ass'y, Cylinder	1		WQ010001-	
2		0752 284 23	** Bushing	1		WQ010001-	
3		0728 111 15	** Nipple, Grease	1		WQ010001-	PT1/8
4		0752 118 26	* Seal, Dust	2		WQ010001-	
5		0782 609 02	* Rod Ass'y, Piston	1		WQ010001-	
6		0752 284 23	** Bushing	1		WQ010001-	
7		0728 111 55	** Nipple, Grease	1		WQ010001-	PT1/8X67.5
8		0752 118 26	* Seal, Dust	2		WQ010001-	
9		0782 397 03	* Head, Cylinder	1		WQ010001-	
10		0782 446 03	* Bushing	1		WQ010001-	
11		0782 397 91	* Kit, Seal	1		WQ010001-	
12	×	0752 756 05	** Ring, U	1		WQ010001-	
13	×	0758 698 09	** Ring, Wiper	1		WQ010001-	
14	×	0760 715 95	** Ring, O	1		WQ010001-	G95-90B
15	×	0782 397 04	** Ring, Back-up	1		WQ010001-	
16	×	0760 716 00	** Ring, O	1		WQ010001-	G100-90B
17		0782 397 93	* Piston Ass'y	1		WQ010001-	
18	×	**** *** **	** Piston	1		WQ010001-	
19		0752 184 24	** Ring Ass'y, Seal	1		WQ010001-	
20		0782 397 06	** Ring, Slide	2		WQ010001-	
21		0561 100 10	** Screw, Set	1		WQ010001-	M10X10
22		0609 016 10	** Ball, Steel	1		WQ010001-	d=1/4

5

https://truckmanualshub.com/

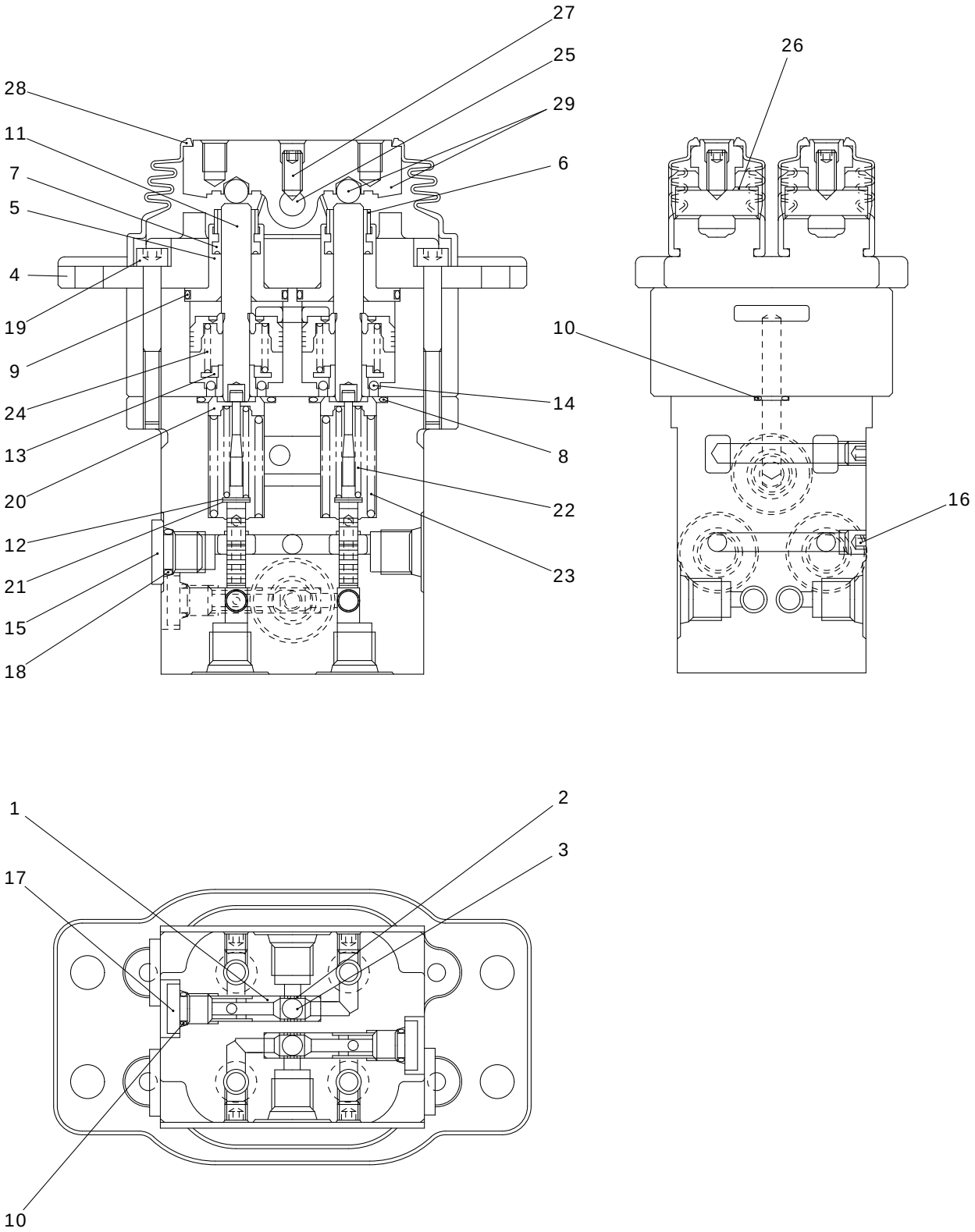

0783995UA-1
0783936UA-1

https://truckmanualshub.com/

KEY No.	SUP.	PART No.	DESCRIPTION	Q'TY	CHAN.	SERIAL No.	REMARKS
● 0		0783 995 UA	Valve Ass'y, Pilot	1		WQ010001-＊＊＊	
● 0		0784 128 UA	Valve Ass'y, Pilot	1	○	＊＊＊-	
1		0783 951 01	＊ Seat	2		WQ010001-	
2		0783 951 02	＊ Bushing	2		WQ010001-	
3		0609 016 10	＊ Ball, Steel	2		WQ010001-	d=1/4
4		0783 951 03	＊ Cover	2		WQ010001-	
5		0783 951 04	＊ Plug	4		WQ010001-	
6		0783 951 05	＊ Cap, Grease	4		WQ010001-	
7		0783 951 06	＊ Packing	4		WQ010001-	
8		0760 310 20	＊ Ring, O	4		WQ010001-	020-90B
9		0760 310 25	＊ Ring, O	4		WQ010001-	025-90B
10		0760 710 08	＊ Ring, O	4		WQ010001-	P8-90B
11		0783 936 01	＊ Rod, Push	4		WQ010001-	
12		0783 951 08	＊ Shim	4		WQ010001-	
13		0783 951 09	＊ Seat, Spring	4		WQ010001-	
14		0751 948 06	＊ Ball, Steel	12		WQ010001-	
15		0756 357 03	＊ Plug	3		WQ010001-	
16		0750 198 15	＊ Plug	6		WQ010001-	
17		0783 920 06	＊ Plug	2		WQ010001-	
18		0760 710 12	＊ Ring, O	3		WQ010001-	P11-90B
19		0562 060 50	＊ Bolt, Socket Head	4		WQ010001-	M6X50
20		0783 951 10	＊ Seat, Spring	4		WQ010001-	
21		0783 951 11	＊ Washer	4		WQ010001-	
● 22		0783 995 01	＊ Spring	4		WQ010001-＊＊＊	
● 22		0783 936 02	＊ Spring	4	○	＊＊＊-	
● 23		0783 951 13	＊ Spring	4		WQ010001-＊＊＊	
● 23		0784 128 01	＊ Spring	4	○	＊＊＊-	
24		0783 951 14	＊ Spring	4		WQ010001-	
25		0783 951 15	＊ Shaft Cam	2		WQ010001-	
26		0783 951 16	＊ Bushing	4		WQ010001-	
27		0783 951 17	＊ Screw, Set	2		WQ010001-	
28		0783 951 18	＊ Boot	2		WQ010001-	
29		0783 951 91	＊ Cam Ass'y	2		WQ010001-	

5

https://truckmanualshub.com/

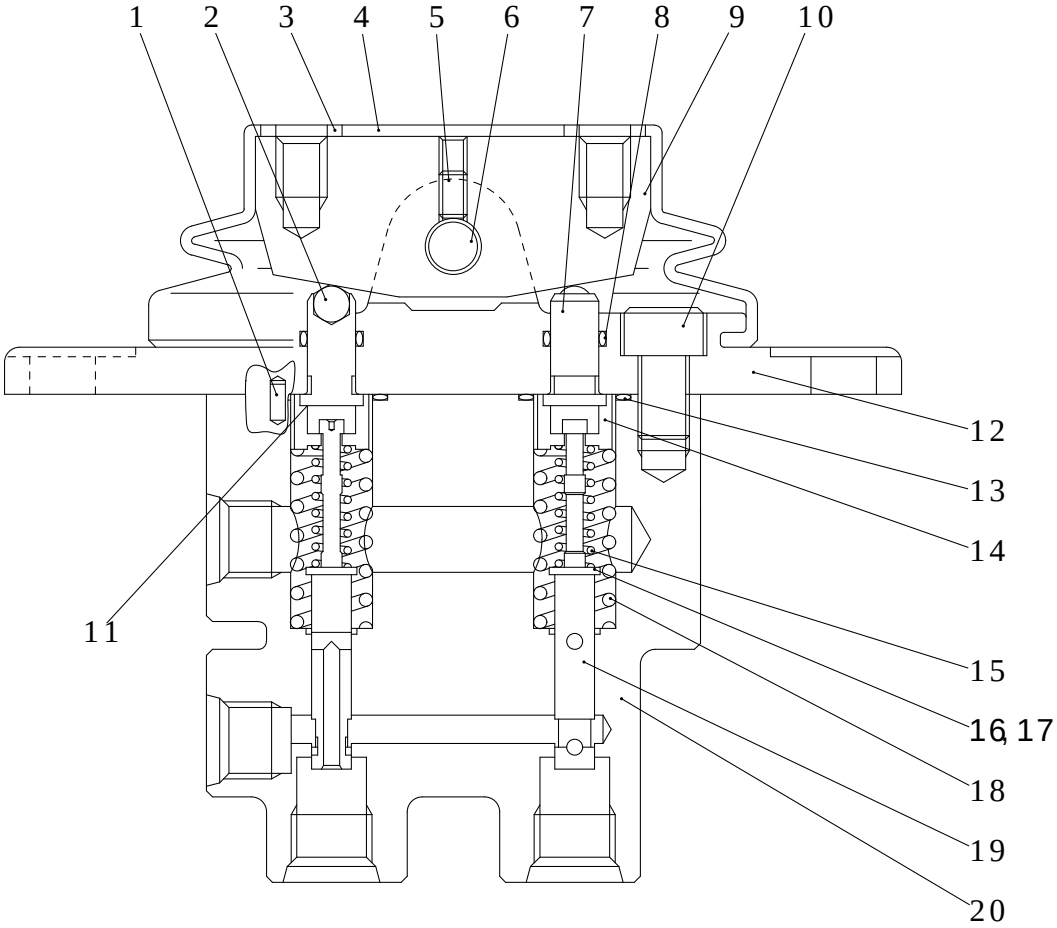

5

0783965UA-1
0783724UA-1

IHI

PILOT VALVE ASS'Y

MODEL 25V4

SHEET No 5-14

https://truckmanualshub.com/

KEY No.	SUP.	PART No.	DESCRIPTION	Q'TY	CHAN.	SERIAL No.	REMARKS
● 0		0783 965 UA	Valve Ass'y, Pilot	1		WQ010001-***	
● 0		0784 023 UA	Valve Ass'y, Pilot	1	○	***-	
1		0756 326 22	* Pin, Spring	2		WQ010001-	d=3X6
2		0756 326 23	* Ball, Steel	2		WQ010001-	d=6
3		0756 326 20	* Washer, Flat	2		WQ010001-	M8
4		0756 326 10	* Boot	1		WQ010001-	
5		0567 040 08	* Screw, Set	1		WQ010001-	M4X8
6		0756 326 08	* Pin	1		WQ010001-	
7		0756 326 04	* Pusher	2		WQ010001-	
8		0760 610 08	* Ring, O	2		WQ010001-	P8-70B
9		0756 326 07	* Cam	1		WQ010001-	
10		0562 080 16	* Bolt, Socket Head	2		WQ010001-	M8X16
11		0783 965 02	* Shim	AR		WQ010001-	t=0.1
11-1		0783 965 03	* Shim	AR		WQ010001-	t=0.2
12		**** *** **	* Cover	1		WQ010001-	
13		0756 326 25	* Ring, O	2		WQ010001-	S16-90B
14		0756 065 13	* Holder, Spring	2		WQ010001-	
15		0783 965 11	* Spring	2		WQ010001-	
16		0756 326 19	* Washer, Flat	2		WQ010001-	M4
17		0756 326 06	* Shim	AR		WQ010001-	t=0.1
17-1		0756 065 11	* Shim	AR		WQ010001-	
● 18		0756 326 09	* Spring	2		WQ010001-***	
● 18		0784 023 02	* Spring	2	○	***-	
19		0783 965 04	* Spool	2		WQ010001-	
20		**** *** **	* Body	1		WQ010001-	

5

https://truckmanualshub.com/

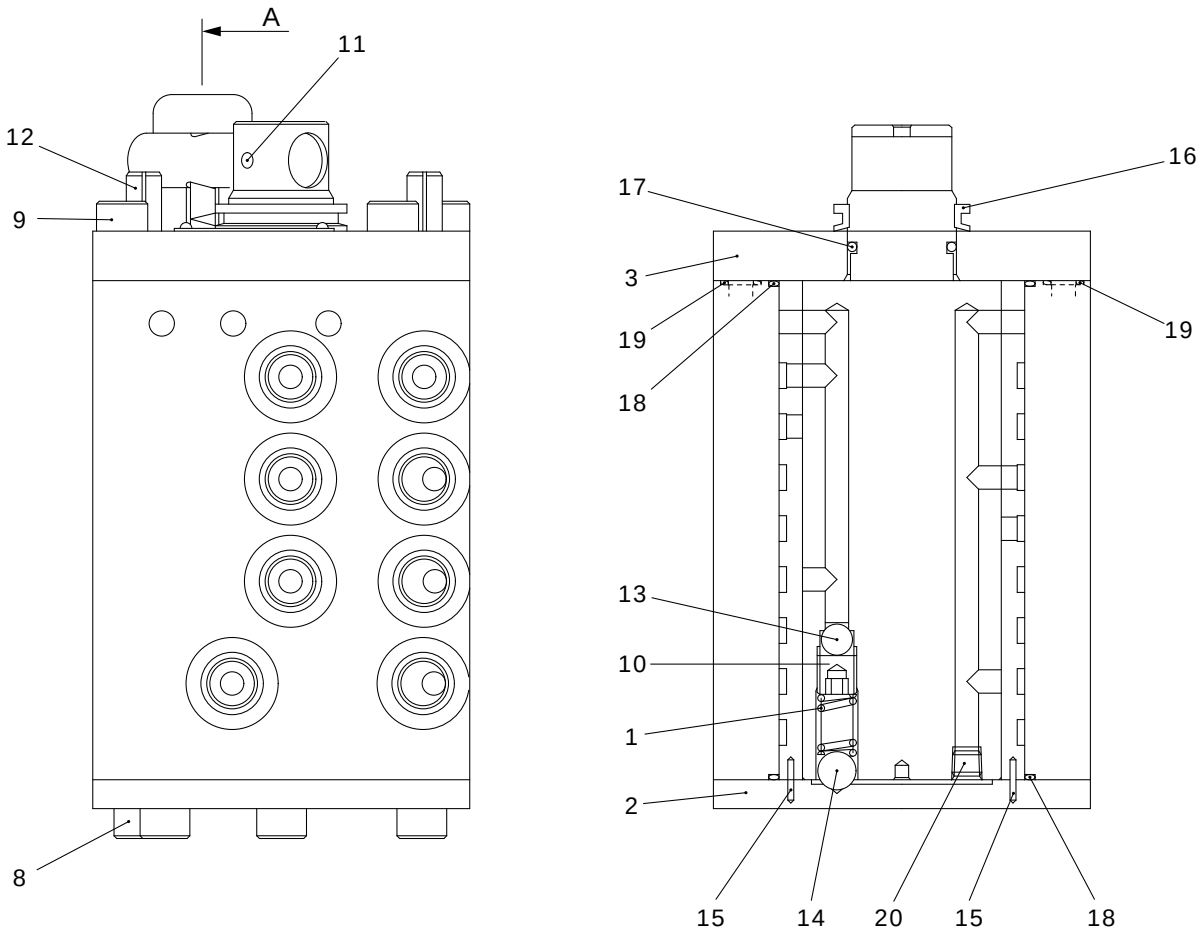

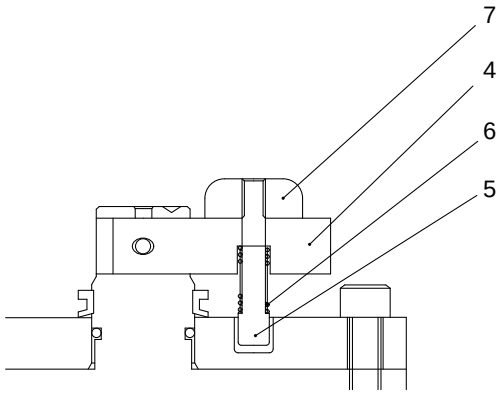

"A" SECTION

0784112UA-1

https://truckmanualshub.com/

KEY No.	SUP.	PART No.	DESCRIPTION	Q'TY	CHAN.	SERIAL No.	REMARKS
0		0784 112 UA	Valve Ass'y, Multiple (A-D Change)	1		WQ010001-	
1		0784 112 04	* Spring	1		WQ010001-	
2		0784 112 06	* Cover	1		WQ010001-	
3		0784 112 07	* Cover	1		WQ010001-	
4		0784 112 08	* Lever	1		WQ010001-	
5		0784 112 09	* Pin	1		WQ010001-	
6		0784 112 10	* Spring	1		WQ010001-	
7		0784 112 11	* Grip	1		WQ010001-	
8		0562 080 16	* Bolt, Socket Head	6		WQ010001-	M8X16
9		0562 080 25	* Bolt, Socket Head	6		WQ010001-	M8X25
10		0561 100 10	* Screw, Set	1		WQ010001-	M10X10
11		0494 606 25	* Pin, Spring	1		WQ010001-	d=4X25
12		0494 610 24	* Pin, Spring	2		WQ010001-	d=8X24
13		0756 781 14	* Ball, Steel	1		WQ010001-	d=8
14		0784 112 20	* Ball, Steel	1		WQ010001-	d=10
15		0783 637 16	* Roller, Needle	4		WQ010001-	d=2X9.8
16		0756 863 09	* Seal, Oil	1		WQ010001-	
17		0760 211 18	* Ring, O	1		WQ010001-	118-70B
18		0783 637 19	* Ring, O	2		WQ010001-	S65-70B
19		0783 637 20	* Ring, O	8		WQ010001-	S8-70B
20		0754 124 13	* Plug	7		WQ010001-	

5

https://truckmanualshub.com/

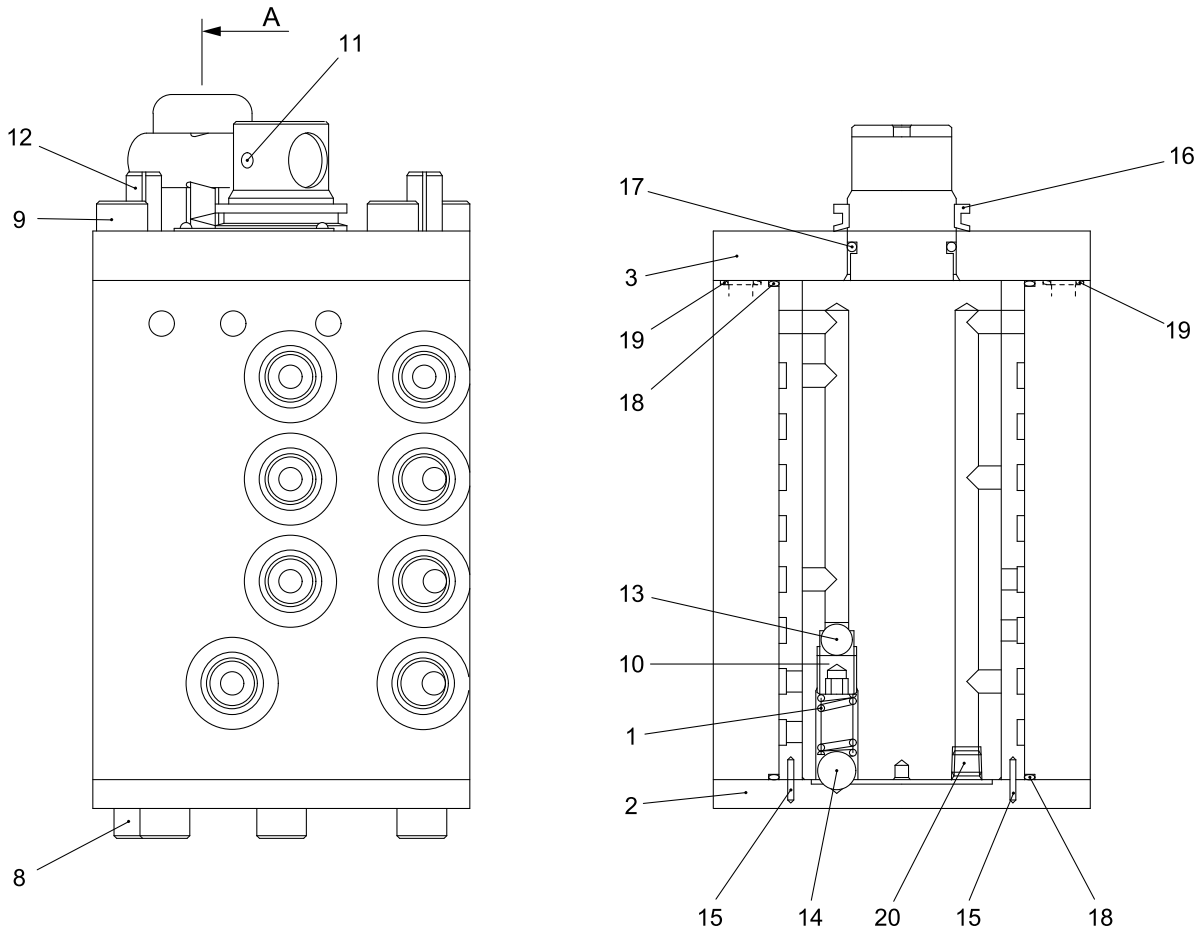

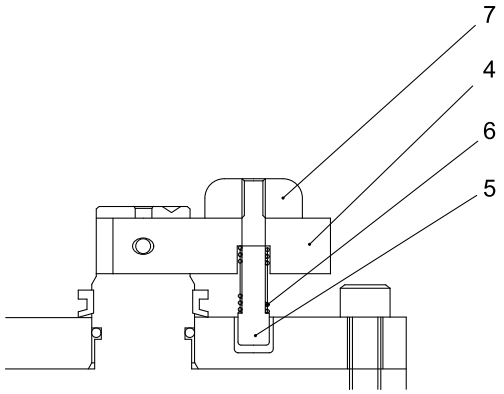

"A" SECTION

0784113UA-1

https://truckmanualshub.com/

KEY No.	SUP.	PART No.	DESCRIPTION	Q'TY	CHAN.	SERIAL No.	REMARKS
0		0784 113 UA	Valve Ass'y, Multiple (A,B,G Change)	1		WQ010001-	
1		0784 112 04	* Spring	1		WQ010001-	
2		0784 112 06	* Cover	1		WQ010001-	
3		0784 113 11	* Cover	1		WQ010001-	
4		0784 112 08	* Lever	1		WQ010001-	
5		0784 112 09	* Pin	1		WQ010001-	
6		0784 112 10	* Spring	1		WQ010001-	
7		0784 112 11	* Grip	1		WQ010001-	
8		0562 080 16	* Bolt, Socket Head	6		WQ010001-	M8X16
9		0562 080 25	* Bolt, Socket Head	6		WQ010001-	M8X25
10		0561 100 10	* Screw, Set	1		WQ010001-	M10X10
11		0494 606 25	* Pin, Spring	1		WQ010001-	d=4X25
12		0494 610 24	* Pin, Spring	2		WQ010001-	d=8X24
13		0756 781 14	* Ball, Steel	1		WQ010001-	d=8
14		0784 112 20	* Ball, Steel	1		WQ010001-	d=10
15		0783 637 16	* Roller, Needle	4		WQ010001-	d=2X9.8
16		0756 863 09	* Seal, Oil	1		WQ010001-	
17		0760 211 18	* Ring, O	1		WQ010001-	118-70B
18		0783 637 19	* Ring, O	2		WQ010001-	S65-70B
19		0783 637 20	* Ring, O	8		WQ010001-	S8-70B
20		0754 124 13	* Plug	7		WQ010001-	

5

https://truckmanualshub.com/

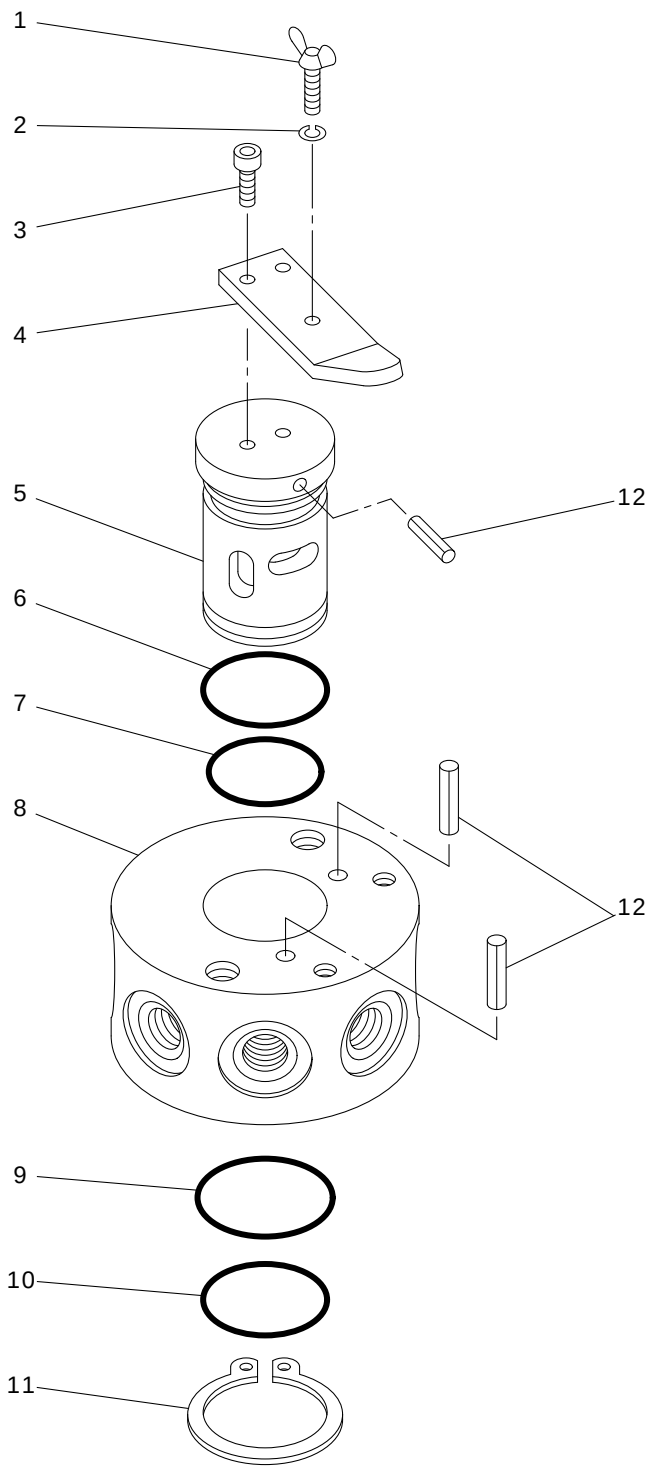

0756094UA-1

IHI

MULTIPLE VALVE ASS'Y (FOR A, F CHANGE)

MODEL 25V4

SHEET No 5-15[B]

https://truckmanualshub.com/

KEY No.	SUP.	PART No.	DESCRIPTION	Q'TY	CHAN.	SERIAL No.	REMARKS
0		0756 094 UA	Valve Ass'y, Selector	1		WQ004001-	
1		0756 094 04	* Bolt, Wing	1		WQ004001-	
2		0590 050 00	* Washer, Lock	1		WQ004001-	M5
3		0562 050 14	* Bolt, Socket Head	2		WQ004001-	M5X14
4		0756 094 03	* Lever	1		WQ004001-	
5		0756 094 02	* Rotor	1		WQ004001-	
6		0756 094 08	* Ring, O	1		WQ004001-	
7		0756 094 07	* Ring, O	1		WQ004001-	
8		0756 094 01	* Body	1		WQ004001-	
9		0756 094 06	* Ring, O	1		WQ004001-	
10		0756 094 05	* Ring, O	1		WQ004001-	
11		0493 510 30	* Ring, Snap	1		WQ004001-	d=30
12		0494 606 12	* Pin, Spring	3		WQ004001-	d=4X12

5

https://truckmanualshub.com/

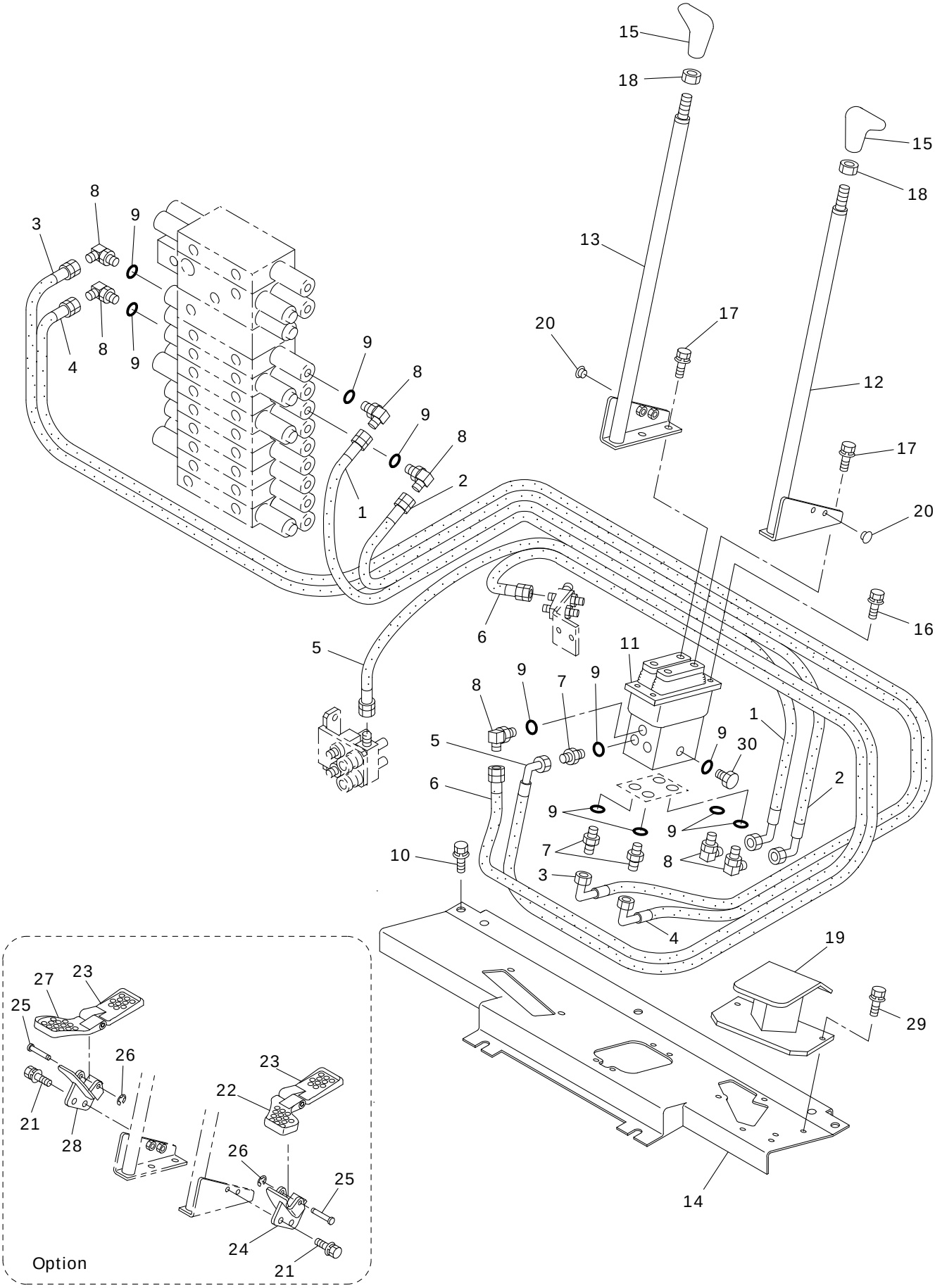

25V4-060100-1　　注意:1. 見出番号14,19 は組にて互換性あり。　NOTE:1. The Key No.14,19 are exchangeable in couples.

https://truckmanualshub.com/

KEY No.	SUP.	PART No.	DESCRIPTION	Q'TY	CHAN.	SERIAL No.	REMARKS
0	×	F342 766 00	Lever Ass'y, Travel	1		WQ010001-	
0-1	×	F361 759 00	Lever Ass'y, Travel	1		WQ010001-	
1		4070 551 01	* Hose Ass'y	1		WQ010001-	L=1150
1-1		D406 499 01	* Decal (T1)	2		WQ010001-	D406 499 00
2		4070 551 01	* Hose Ass'y	1		WQ010001-	L=1150
2-1		D406 499 03	* Decal (T3)	2		WQ010001-	D406 499 00
3		4070 551 04	* Hose Ass'y	1		WQ010001-* * *	L=1480
3		4070 551 42	* Hose Ass'y	1	○	* * *-	L=1600
3-1		D406 499 02	* Decal (T2)	2		WQ010001-	D406 499 00
4		4070 551 04	* Hose Ass'y	1		WQ010001-* * *	L=1480
4		4070 551 42	* Hose Ass'y	1	○	* * *-	L=1600
4-1		D406 499 04	* Decal (T4)	2		WQ010001-	D406 499 00
5		4070 551 13	* Hose Ass'y	1		WQ010001-	L=850
6		4070 548 69	* Hose Ass'y	1		WQ010001-	L=840
7		0713 700 70	* Connector	3		WQ010001-	
8		0710 122 09	* Elbow	7		WQ010001-	
9		0760 710 12	* Ring, O	12		WQ010001-	P11-90B
10		0518 100 25	* Bolt, Treatment (W/L.W, F.W)	5		WQ010001-	M10X25 P=1.25
● 11	#	0783 995 UA	* Valve Ass'y, Pilot	1		WQ010001-***	Sh. No. 5-13
● 11	#	0784 128 UA	* Valve Ass'y, Pilot	1	○	***-	Sh. No. 5-13
● 12		D495 871 00	* Lever (L.H.)	1		WQ010001-***	
● 12		D495 880 00	* Lever (L.H.)	1	△	***-	
● 13		D495 872 00	* Lever (R.H.)	1		WQ010001-***	
● 13		D495 881 00	* Lever (R.H.)	1	△	***-	
14		D419 360 00	* Bracket	1		WQ010001-	
14		D419 676 00	* Bracket	1	△	***-	
15		0690 283 72	* Grip	2		WQ010001-	
16		0517 080 25	* Bolt, Treatment (W/L.W, F.W)	4		WQ010001-	M8X25
17		0517 080 16	* Bolt, Treatment (W/L.W, F.W)	4		WQ010001-	M8X16
18		0549 140 00	* Nut, Half	2		WQ010001-	M14 P=1.5
19		D419 285 00	* Bracket	1		WQ010001-***	
19		D419 551 00	* Bracket	1	○	***-***	
19		D419 675 00	* Bracket	1	△	***-	
20		0690 201 05	* Plug, Hole	4		WQ010001-	
21		0517 080 25	* Bolt, Treatment (W/L.W, F.W)	4		WQ010001-	M8X25
22		D501 057 00	* Pedal	1		WQ010001-	Option
23		D501 076 00	* Pedal	2		WQ010001-	Option
24		D419 342 00	* Bracket	1		WQ010001-***	Option
24		D419 697 00	* Bracket	1	○	***-	Option
25		D013 384 00	* Pin,Head	2		WQ010001-	Option
26		0493 510 08	* Ring, Snap	2		WQ010001-	Option
27		D501 058 00	* Pedal	1		WQ010001-	Option
28		D419 343 00	* Bracket	1		WQ010001-***	Option
28		D419 698 00	* Bracket	1	○	***-	
29		0518 100 20	* Bolt, Treatment (W/L.W, F.W)	2		WQ010001-	M8X20
30		0710 212 04	* Plug	2		WQ010001-	

6

https://truckmanualshub.com/

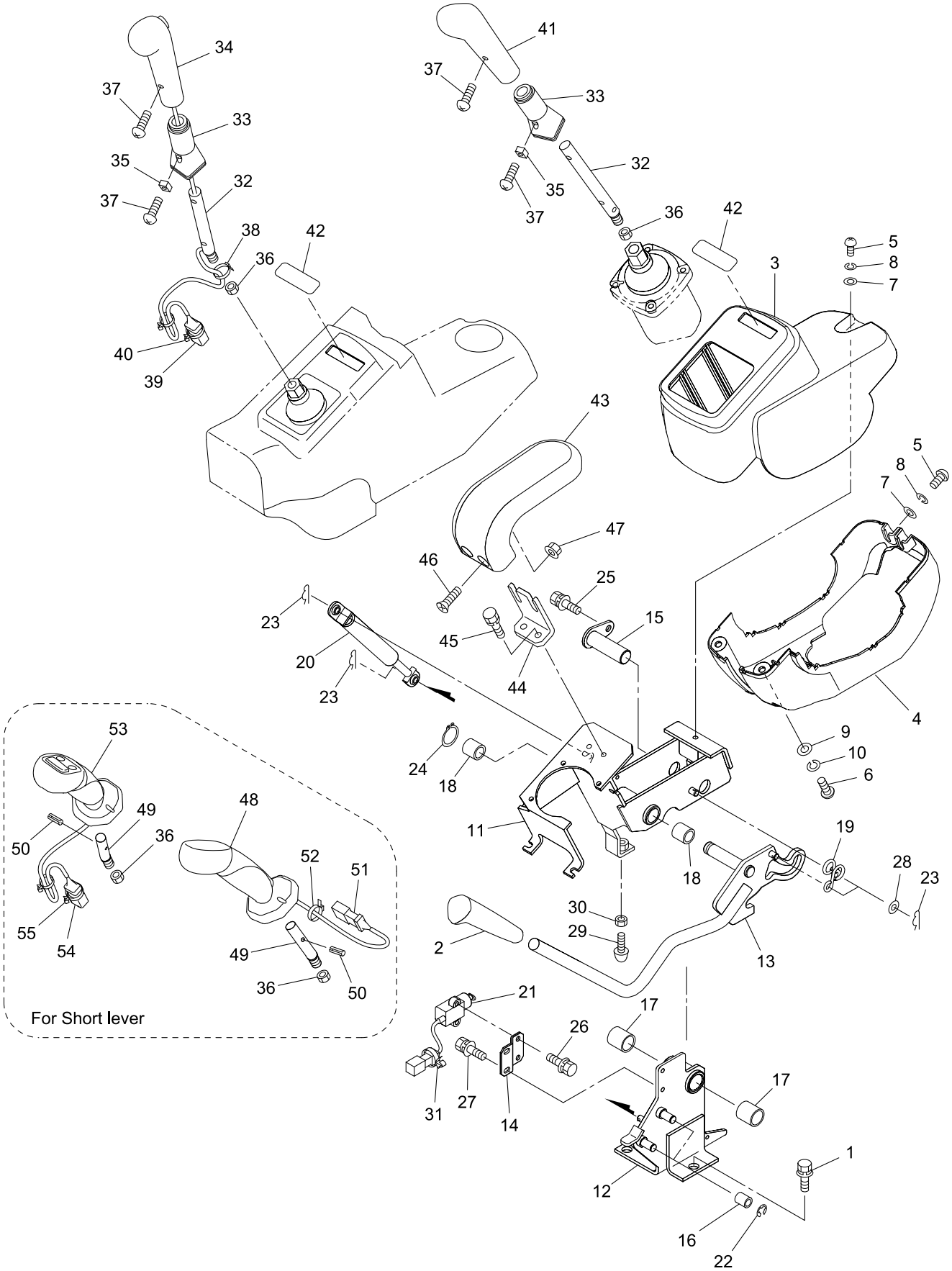

25V4-060200-1

https://truckmanualshub.com/

KEY No.	SUP.	PART No.	DESCRIPTION	Q'TY	CHAN.	SERIAL No.	REMARKS
0	×	F361 759 00	Lever Ass'y, Control	1		WQ010001-	
1		0518 100 25	* Bolt, Treatment (W/L.W, F.W)	3		WQ010001-	M10X25 P=1.25
2		0690 283 86	* Grip	1		WQ010001-	
3		D465 318 00	* Panel	1		WQ010001-	
4		D465 319 00	* Panel	1		WQ010001-	
5		4004 364 01	* Bolt, Button Head	3		WQ010001-	M6X18
6		0565 060 25	* Screw, Pan Head	2		WQ010001-	M6X25
7		0594 060 00	* Washer, Flat	3		WQ010001-	M6
8		0596 060 00	* Washer, Lock	3		WQ010001-	M6
9		0593 060 00	* Washer, Flat	2		WQ010001-	M6
10		0590 060 00	* Washer, Lock	2		WQ010001-	M6
11		D419 308 00	* Bracket	1		WQ010001-	
12		D418 302 00	* Bracket	1		WQ010001-	
13		D495 774 00	* Lever	1		WQ010001-	
14		D418 190 00	* Bracket	1		WQ010001-	
15		D017 225 00	* Pin	1		WQ010001-	
16		4040 867 00	* Spacer	2		WQ010001-	
17		0618 120 20	* Bushing	2		WQ010001-	
18		0618 116 15	* Bushing	2		WQ010001-	
19		D170 052 00	* Spring	1		WQ010001-	
20		0652 253 UA	* Stay, Dumper	1		WQ010001-	
21		0858 314 15	* Switch, Limit	1		WQ010001-	
22		0493 560 09	* Ring ""E""	2		WQ010001-	
23		4016 030 04	* Pin, Snap	4		WQ010001-	
24		0493 510 16	* Ring, Snap	1		WQ010001-	d=16
25		0517 080 20	* Bolt, Treatment (W/L.W, F.W)	1		WQ010001-	M8X20
26		0517 060 16	* Bolt, Treatment (W/L.W, F.W)	2		WQ010001-	M6X16
27		0517 060 12	* Bolt, Treatment (W/L.W, F.W)	2		WQ010001-	M6X12
28		0593 080 00	* Washer, Flat	2		WQ010001-	M8
29		0690 202 50	* Pad, Rubber	1		WQ010001-	
30		0548 120 00	* Nut, Half	1		WQ010001-	M12
31		0690 082 08	* Band, Cable	1		WQ010001-	
32		D495 577 00	* Lever (L=150)	2		WQ010001-	
32-1		D495 873 00	* Lever (L=100)	2		WQ010001-	
33		D042 040 00	* Collar (L=75)	2		WQ010001-	
33-1		D042 069 00	* Collar (L=25)	2		WQ010001-	
34		0690 283 40	* Grip (W/Switch)	1		WQ010001-	
35		D040 178 00	* Spacer	2		WQ010001-	
36		0580 140 00	* Nut, Hex.	2		WQ010001-	M14
37		0565 040 12	* Screw, Pan Head	4		WQ010001-	M4X12
38		0820 067 07	* Band, Cable	1		WQ010001-	
39		D592 290 00	* Harness	1		WQ010001-	
● 40		0690 082 08	* Clamp, Hose	1		WQ010001-	
41		0690 283 41	* Grip	1		WQ010001-	
42		D408 281 00	* Seal	2		WQ010001-***	
43		D480 009 00	* Rest, Arm	2		WQ010001-	
44		D418 139 00	* Bracket	2		WQ010001-	
45		0519 080 20	* Bolt, Treatment (W/L.W)	4		WQ010001-	M8X20
46		D004 049 02	* Bolt, Button Head	4		WQ010001-	M8X30
47		0521 080 00	* Nut, Hex..(W/F.W)	4		WQ010001-	M8
48		0690 283 85	* Grip	1		WQ010001-	
49		D495 843 00	* Lever	2		WQ010001-	

6

https://truckmanualshub.com/

KEY No.	SUP.	PART No.	DESCRIPTION	Q'TY	CHAN.	SERIAL No.	REMARKS
50		0494 608 40	* Pin, Spring	2		WQ010001-	d=5X40
51		0820 514 UA	* Connector	1		WQ010001-	
52		0820 067 03	* Band, Cable	1		WQ010001-	
53		0690 283 82	* Grip (W/Switch)	1		WQ010001-	
54		0820 513 UA	* Connector	1		WQ010001-	
● 55		0690 082 08	* Clamp, Hose	1		WQ010001-	

6

https://truckmanualshub.com/

[Memo]

https://truckmanualshub.com/

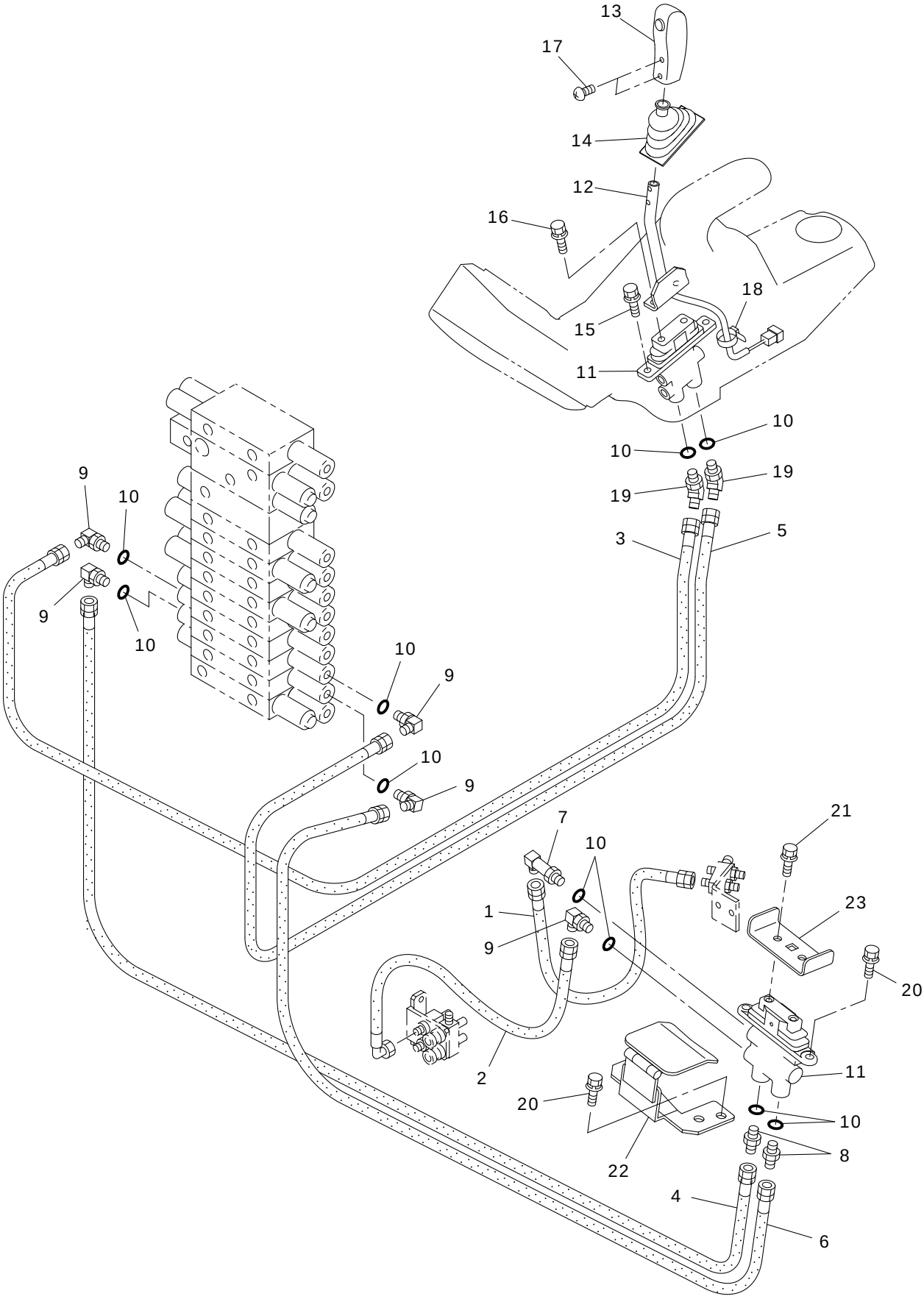

25V4-060300-1

https://truckmanualshub.com/

KEY No.	SUP.	PART No.	DESCRIPTION	Q'TY	CHAN.	SERIAL No.	REMARKS
● 0	×	F342 766 00	Control Ass'y, Blade & Boom Swing	1		WQ010001-	
● 0-1	×	F361 759 00	Control Ass'y, Blade & Boom Swing	1		WQ010001-	
1		4070 548 64	* Hose Ass'y	1		WQ010001-	L=270
2		4070 551 20	* Hose Ass'y	1		WQ010001-	L=550
3		4070 548 01	* Hose Ass'y	1		WQ010001-	L=1900
3-1		D407 818 01	* Decal (BA)	2		WQ010001-	D407 818 00
4		4070 548 18	* Hose Ass'y	1		WQ010001-	L=1050
5		4070 548 40	* Hose Ass'y	1		WQ010001-	L=1650
5-1		D407 818 02	* Decal (BB)	2		WQ010001-	D407 818 00
6		4070 548 58	* Hose Ass'y	1		WQ010001-	L=880
7		D060 028 00	* Elbow	1		WQ010001-	
8		0713 700 70	* Connector	2		WQ010001-	
9		0710 122 09	* Elbow	5		WQ010001-	
10		0760 710 12	* Ring, O	10		WQ010001-	P11-90B
● 11	#	0783 965 UA	* Valve Ass'y, Pilot	2		WQ010001-***	Sh. No. 5-14
● 11	#	0784 023 UA	* Valve Ass'y, Pilot	2	○	***-	Sh. No. 5-14
12		D495 808 00	* Lever	1		WQ010001-	
13		0690 283 81	* Grip (W/Switch)	1		WQ010001-	
14		D181 002 00	* Boots	1		WQ010001-	
15		0517 080 20	* Bolt, Treatment (W/L.W, F.W)	2		WQ010001-	M8X20
16		0517 080 16	* Bolt, Treatment (W/L.W, F.W)	2		WQ010001-	M8X16
17		0565 040 08	* Screw, Pan Head	2		WQ010001-	M4X8
18		0820 067 03	* Band, Cable	1		WQ010001-	
19		0710 121 00	* Elbow, 45	2		WQ010001-	
20		0518 100 25	* Bolt, Treatment (W/L.W, F.W)	4		WQ010001-	M10X25 P=1.25
21		0517 080 16	* Bolt, Treatment (W/L.W, F.W)	2		WQ010001-	M8X16
22		D419 286 00	* Bracket	1		WQ010001-	
23		D501 075 00	* Pedal	1		WQ010001-	

6

https://truckmanualshub.com/

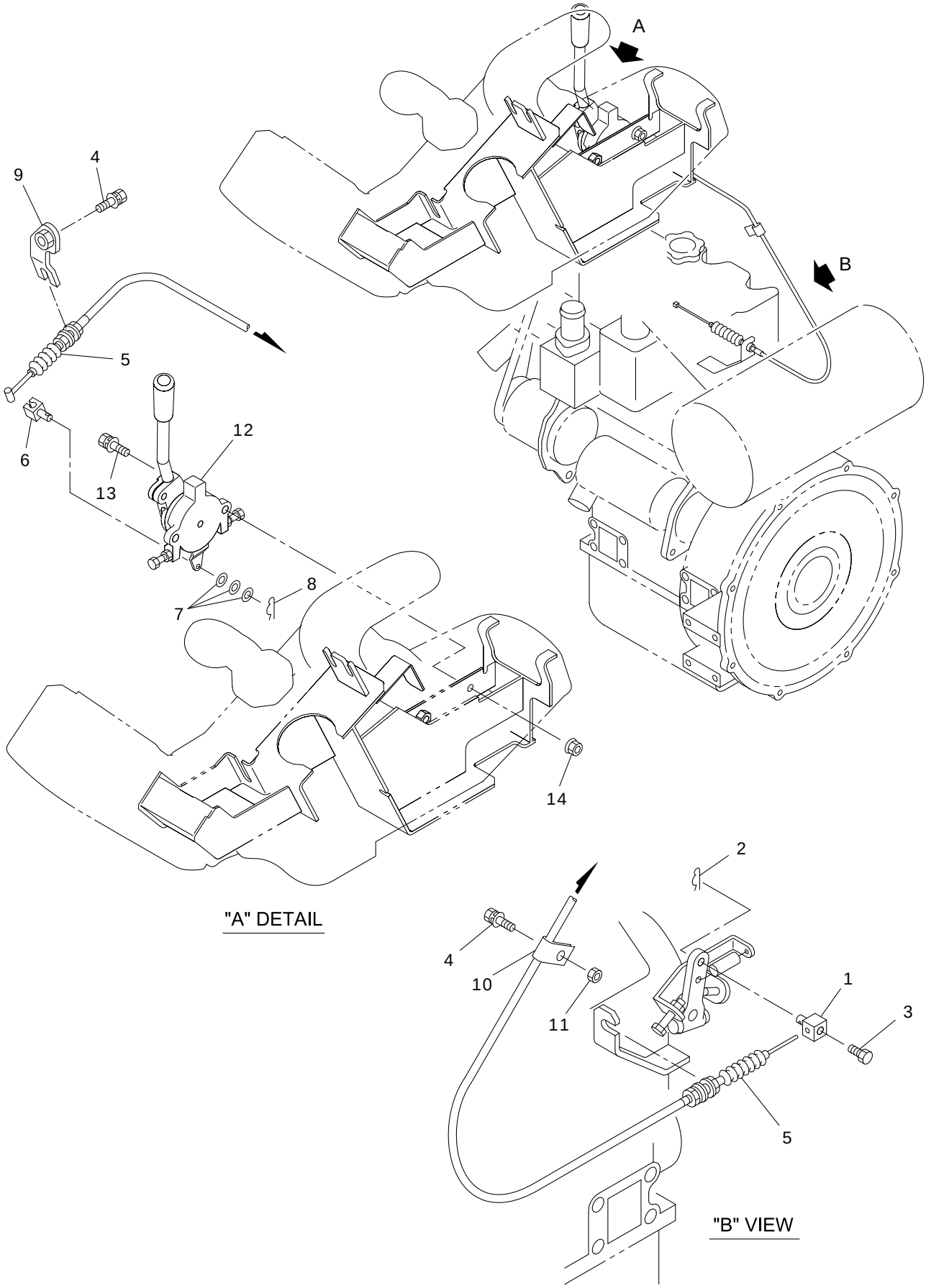

25V4-060400-1

https://truckmanualshub.com/

KEY No.	SUP.	PART No.	DESCRIPTION	Q'TY	CHAN.	SERIAL No.	REMARKS
● 0	×	F361 705 00	Control Ass'y, Engine	1		WQ010001-WQ020000	
1		4019 463 00	* Pin	1		WQ010001-	
2		4016 030 03	* Pin, Snap	1		WQ010001-	
3		0513 050 10	* Bolt, Treatment	1		WQ010001-	M5X10
4		0517 080 20	* Bolt, Treatment (W/L.W, F.W)	2		WQ010001-	M8X20
5		0690 511 43	* Cable, Control	1		WQ010001-	
6		4019 906 00	* Pin	1		WQ010001-	
7		0593 060 00	* Washer, Flat	3		WQ010001-	M6
8		0599 010 15	* Pin, Cotter	1		WQ010001-	d=1.6X15
9		D418 635 00	* Bracket	1		WQ010001-	
10		4080 000 01	* Clamp, Hose	1		WQ010001-	
11		0580 080 00	* Nut, Hex.	1		WQ010001-	M8
12		0659 000 74	* Lever, Throttle	1		WQ010001-	
13		0518 100 30	* Bolt, Treatment (W/L.W, F.W)	2		WQ010001-	M10X30 P=1.25
14		0521 100 00	* Nut, Hex. (W/F.W)	2		WQ010001-	M10

6

https://truckmanualshub.com/

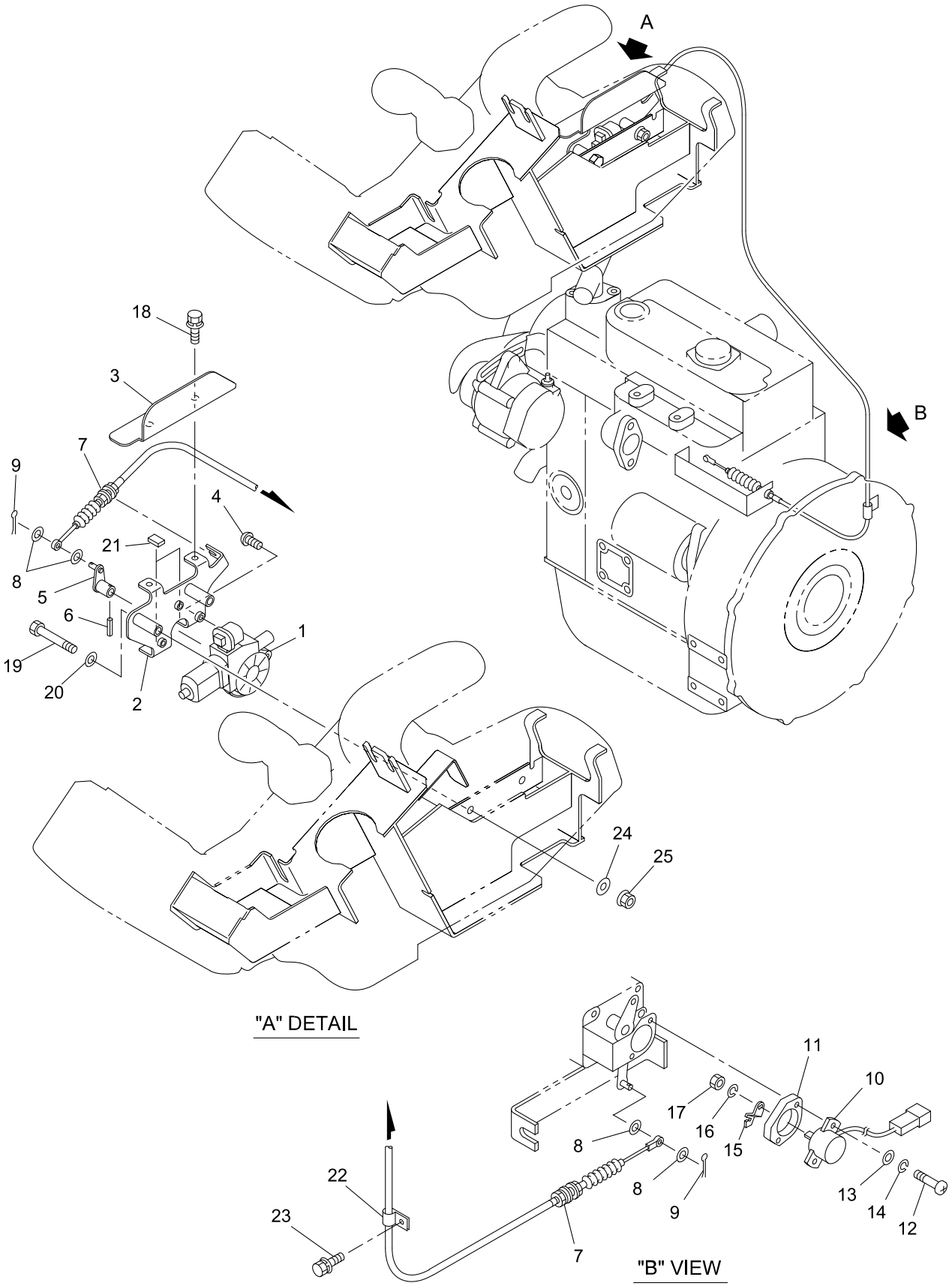

25V4-06040A-1

https://truckmanualshub.com/

KEY No.	SUP.	PART No.	DESCRIPTION	Q'TY	CHAN.	SERIAL No.	REMARKS
0	×	F361 754 00	Control Ass'y, Engine	1		WQ020001-	
1		0891 802 UA	* Motor	1		WQ020001-	
2		D419 661 00	* Bracket	1		WQ020001-	
3		D419 686 00	* Bracket	1		WQ020001-	
4		0528 050 16	* Screw, Tapping	3		WQ020001-	M5X16
5		D495 874 00	* Lever	1		WQ020001-	
6		0494 606 16	* Pin, Spring	1		WQ020001-	d=6X16
7		0690 511 50	* Cable, Control	1		WQ020001-	
8		0593 060 00	* Washer, Flat	4		WQ020001-	M6
9		0599 010 15	* Pin, Cotter	2		WQ020001-	d=1.6X15
10		0858 614 12	* Meter, Potention	1		WQ020001-	
11		D040 346 00	* Spacer	1		WQ020001-	
12		0565 040 20	* Screw, Pan Head	2		WQ020001-	M4X20
13		0593 040 00	* Washer, Flat	2		WQ020001-	M4
14		0590 040 00	* Washer, Lock	2		WQ020001-	M4
15		D495 863 00	* Lever	1		WQ020001-	
16		0590 060 00	* Washer, Lock	1		WQ020001-	M6
17		0580 060 00	* Nut, Hex.	1		WQ020001-	M6
● 18		0517 060 16	* Bolt, Treatment (W/L.W, F.W)	2		WQ020001-	M6X16
19		0513 080 60	* Bolt, Treatment	2		WQ020001-	M8X60
20		0593 080 00	* Washer, Flat	2		WQ020001-	M8
21		D433 503 00	* Plate, Rubber	2		WQ020001-	
22		4080 000 01	* Clamp, Hose	1		WQ020001-	
23		0518 100 25	* Bolt, Treatment (W/L.W, F.W)	1		WQ020001-	M10X25 P=1.25
24		4006 119 01	* Washer	2		WQ020001-	M8
25		0521 080 00	* Nut, Hex. (W/F.W)	2		WQ020001-	M8

6

https://truckmanualshub.com/

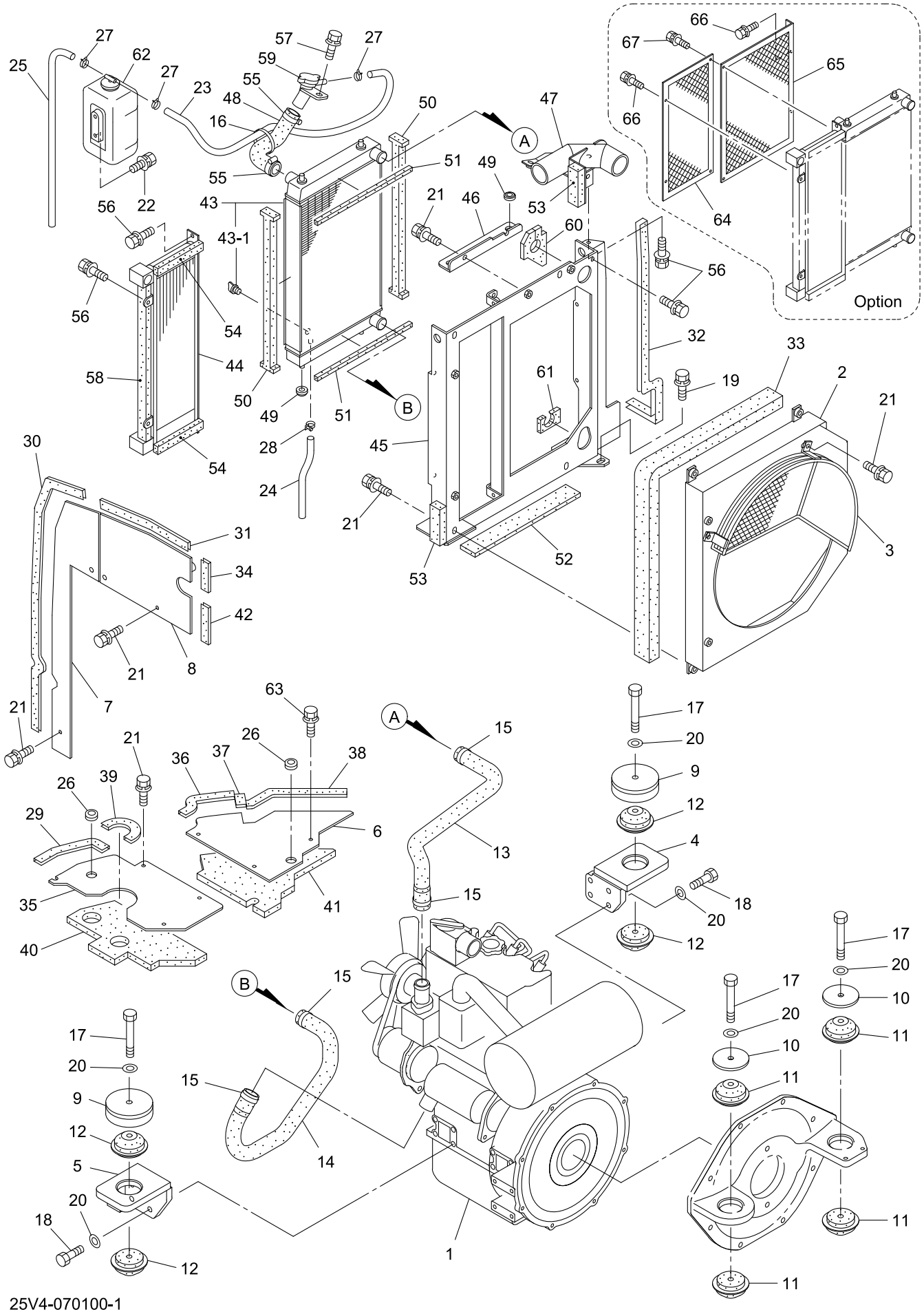

https://truckmanualshub.com/

KEY No.	SUP.	PART No.	DESCRIPTION	Q'TY	CHAN.	SERIAL No.	REMARKS
● 0	×	F330 729 00	Engine & Accessories	1		WQ010001-WQ020000	
1		0676 254 UA	* Engine Ass'y	1		WQ010001-	S773L-C-2501
2		D470 741 00	* Guide, Fan	1		WQ010001-	
3		0668 502 19	* Guard, Fan	1		WQ010001-	
4		D419 260 00	* Bracket	1		WQ010001-	
5		D419 261 00	* Bracket	1		WQ010001-	
● 6		D419 687 00	* Bracket	1		WQ010001-	
7		D458 456 00	* Cover	1		WQ010001-	
8		D458 457 00	* Cover	1		WQ010001-* * *	
8		D458 579 00	* Cover	1	×	* * *-	
9		D481 023 00	* Holder	2		WQ010001-	
● 10		D006 144 00	* Washer	2		WQ010001-	
11		0910 931 36	* Rubber, Cushion	4		WQ010001-	
12		0910 931 37	* Rubber, Cushion	4		WQ010001-	
13		0775 551 88	* Hose, Radiator	1		WQ010001-	
14		0775 551 89	* Hose, Radiator	1		WQ010001-	
15		0690 083 08	* Clamp, Hose	4		WQ010001-	
16		0820 067 10	* Band, Cable	1		WQ010001-	
17		0513 121 00	* Bolt, Treatment	4		WQ010001-	M12X100
18		0558 120 30	* Bolt, Treatment	8		WQ010001-	M12X30 P=1.25
19		0518 100 25	* Bolt, Treatment (W/L.W, F.W)	4		WQ010001-	M10X25 P=1.25
20		0595 120 00	* Washer, Treatment	12		WQ010001-	M12
21		0517 080 20	* Bolt, Treatment (W/L.W, F.W)	16		WQ010001-	M8X20
22		0517 060 10	* Bolt, Treatment (W/L.W, F.W)	2		WQ010001-	M6X10
23		0779 002 97	* Hose	M		WQ010001-	L=650
24		0779 002 97	* Hose	M		WQ010001-	L=280
25		0779 002 97	* Hose	M		WQ010001-	L=750
26		0910 941 42	* Grommet	2		WQ010001-	
27		0690 081 91	* Clamp, Hose	3		WQ010001-	
28		0690 081 56	* Clamp, Hose	1		WQ010001-	
29		0910 870 05	* Seal	M		WQ010001-	L=175
30		0910 870 05	* Seal	M		WQ010001-	L=790
31		0910 870 05	* Seal	M		WQ010001-	L=270
32		0910 870 05	* Seal	M		WQ010001-	L=670
33		D493 524 00	* Panel, Sponge	1		WQ010001-	
34		0910 870 05	* Seal	M		WQ010001-	L=77
35		D458 458 00	* Cover	1		WQ010001-	
36		0910 870 05	* Seal	M		WQ010001-	L=150
37		0910 870 05	* Seal	M		WQ010001-	L=40
38		0910 870 05	* Seal	M		WQ010001-	L=230
39		0910 870 05	* Seal	M		WQ010001-	L=140
40		D493 648 00	* Panel, Sponge	1		WQ010001-	
41		D493 649 00	* Panel, Sponge	1		WQ010001-	
42		0910 870 05	* Seal	M		WQ010001-	L=97
43		0668 248 UA	* Radiator Ass'y	1		WQ010001-	
● 43-1		0668 248 02	** Plug, Drain	1		WQ010001-	
44		0667 800 UA	* Cooler Ass'y, Oil	1		WQ010001-	
45		D206 870 00	* FRAME	1		WQ010001-	
46		D418 847 00	* Bracket	1		WQ010001-	
47		D522 280 00	* Duct	1		WQ010001-	
48		0775 551 85	* Hose, Radiator	1		WQ010001-	
49		D580 182 00	* Pad	4		WQ010001-	

7

https://truckmanualshub.com/

KEY No.	SUP.	PART No.	DESCRIPTION	Q'TY	CHAN.	SERIAL No.	REMARKS
50		D493 495 00	* Panel, Sponge	2		WQ010001-	
51		D493 488 00	* Panel, Sponge	2		WQ010001-	
52		D493 520 00	* Panel, Sponge	1		WQ010001-	
53		D493 672 00	* Panel, Sponge	2		WQ010001-	
54		D493 525 00	* Panel, Sponge	2		WQ010001-	
55		0690 083 08	* Clamp, Hose	2		WQ010001-	
56		0517 080 16	* Bolt, Treatment (W/L.W, F.W)	6		WQ010001-	M8X16
57		0517 060 16	* Bolt, Treatment (W/L.W, F.W)	1		WQ010001-	M6X16
58		D493 726 00	* Panel, Sponge	1		WQ010001-	
59		0668 249 UA	* Opering, Filler	1		WQ010001-	
60		D493 647 00	* Panel, Sponge	1		WQ010001-	
61		D493 652 00	* Panel, Sponge	1		WQ010001-	
62		E31055 0130	* Tank, Surge	1		WQ010001-	
● 63		0517 080 12	* Bolt, Treatment (W/L.W, F.W)	1		WQ010001-	M8X12
● 64		0668 400 36	* Net, Dust	1		WQ010001-	Front
● 65		0668 400 37	* Net, Dust	1		WQ010001-	Rear
● 66		0517 080 20	* Bolt, Treatment (W/L.W, F.W)	4		WQ010001-	M8X20
● 67		0517 080 16	* Bolt, Treatment (W/L.W, F.W)	2		WQ010001-	M8X16

7

https://truckmanualshub.com/

[Memo]

https://truckmanualshub.com/

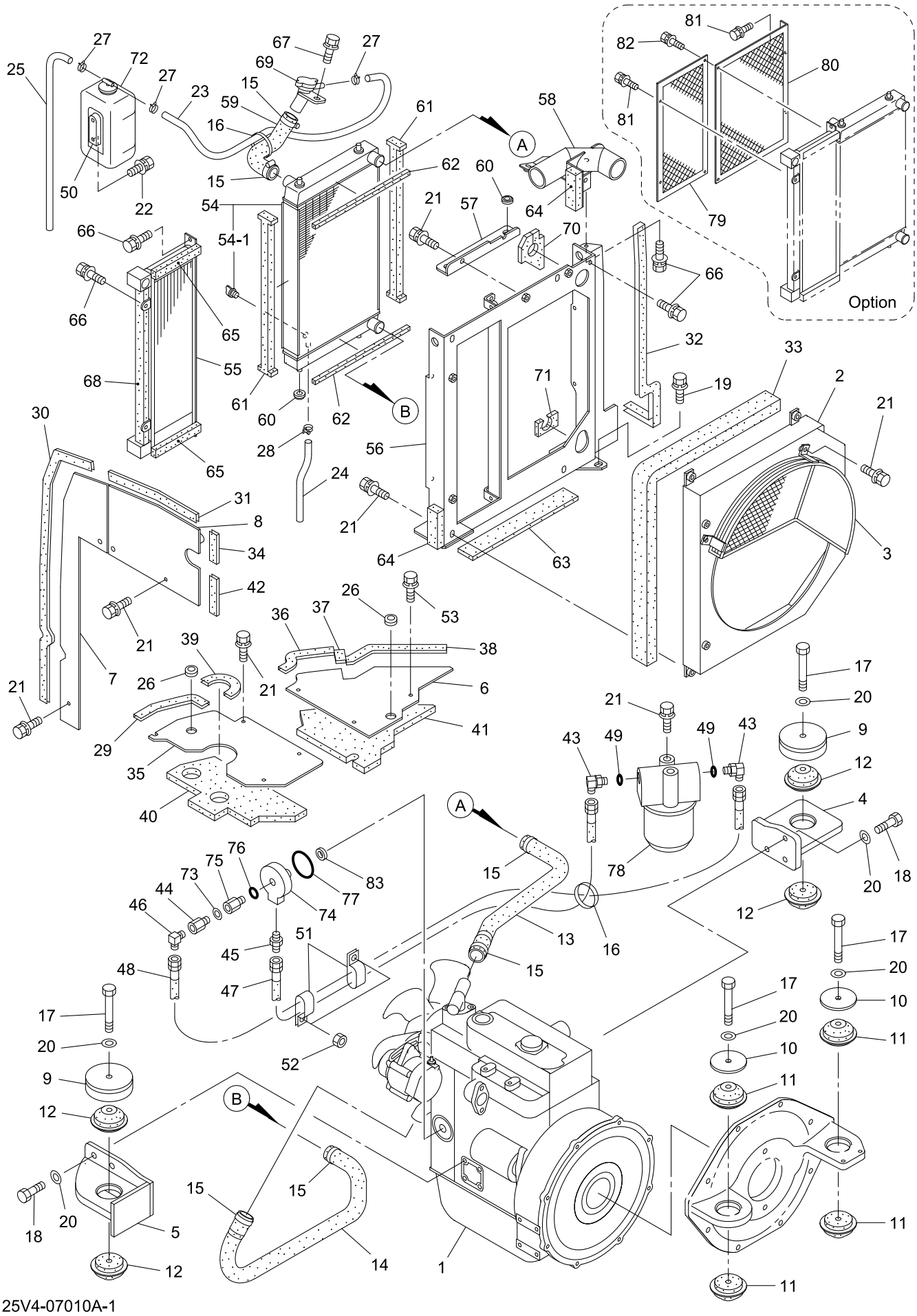

https://truckmanualshub.com/

KEY No.	SUP.	PART No.	DESCRIPTION	Q'TY	CHAN.	SERIAL No.	REMARKS
0	×	F330 723 00	Engine & Accessories	1		WQ020001-	
1		0676 269 UA	* Engine Ass'y	1		WQ020001-	D1305-E4B
2		D470 831 00	* Guide, Fan	1		WQ020001-	
3		0668 502 19	* Guard, Fan	1		WQ020001-	
4		D419 511 00	* Bracket	1		WQ020001-	
5		D419 510 00	* Bracket	1		WQ020001-	
6		D419 687 00	* Bracket	1		WQ020001-	
7		D458 456 00	* Cover	1		WQ020001-	
8		D458 579 00	* Cover	1		WQ020001-	
9		D481 023 00	* Holder	2		WQ020001-	
10		D006 144 00	* Washer	2		WQ020001-	
11		0910 931 36	* Rubber, Cushion	4		WQ020001-	
12		0910 931 38	* Rubber, Cushion	4		WQ020001-	
13		0775 552 00	* Hose, Radiator	1		WQ020001-	
14		0775 552 04	* Hose, Radiator	1		WQ020001-	
15		0690 083 08	* Clamp, Hose	6		WQ020001-	
16		0820 067 10	* Band, Cable	2		WQ020001-	
17		0513 121 00	* Bolt, Treatment	4		WQ020001-	M12X100
18		0558 100 25	* Bolt, Treatment	7		WQ020001-	M12X25 P=1.25
19		0518 100 25	* Bolt, Treatment (W/L.W, F.W)	6		WQ020001-	M10X25 P=1.25
20		0595 120 00	* Washer, Treatment	11		WQ020001-	M12
● 21		0517 080 20	* Bolt, Treatment (W/L.W, F.W)	19		WQ020001-	M8X20
22		0517 060 10	* Bolt, Treatment (W/L.W, F.W)	2		WQ020001-	M6X10
23		0779 002 97	* Hose	M		WQ020001-	L=650
24		0779 002 97	* Hose	M		WQ020001-	L=280
25		0779 002 97	* Hose	M		WQ020001-	L=750
26		0910 941 42	* Grommet	2		WQ020001-	
27		0690 081 91	* Clamp, Hose	3		WQ020001-	
28		0690 081 56	* Clamp, Hose	1		WQ020001-	
29		0910 870 05	* Seal	M		WQ020001-	L=175
30		0910 870 05	* Seal	M		WQ020001-	L=790
31		0910 870 05	* Seal	M		WQ020001-	L=270
32		0910 870 05	* Seal	M		WQ020001-	L=670
33		D493 524 00	* Panel, Sponge	1		WQ020001-	
34		0910 870 05	* Seal	M		WQ020001-	L=77
35		D458 458 00	* Cover	1		WQ020001-	
36		0910 870 05	* Seal	M		WQ020001-	L=150
37		0910 870 05	* Seal	M		WQ020001-	L=40
38		0910 870 05	* Seal	M		WQ020001-	L=230
39		0910 870 05	* Seal	M		WQ020001-	L=140
40		D493 648 00	* Panel, Sponge	1		WQ020001-	
41		D493 649 00	* Panel, Sponge	1		WQ020001-	
42		0910 870 05	* Seal	M		WQ020001-	L=97
43		0710 113 43	* Elbow, Reducer	2		WQ020001-	PF1/2XPF3/8
44		D060 310 00	* Connector	1		WQ020001-	
45		D060 561 00	* Connector	1		WQ020001-	
46		0712 310 51	* Elbow	1		WQ020001-	
47		D070 600 01	* Hose	M		WQ020001-	L=1100
48		D070 600 02	* Hose	M		WQ020001-	L=1150
49		0760 710 19	* Ring, O	2		WQ020001-	P18-90B
50		0668 616 UA	* Holder	1		WQ020001-	
51		4080 000 29	* Clamp, Hose	2		WQ020001-	

https://truckmanualshub.com/

KEY No.	SUP.	PART No.	DESCRIPTION	Q'TY	CHAN.	SERIAL No.	REMARKS
52		0524 100 00	* Nut, Hex. (W/F.W)	2		WQ020001-	M10 P=1.25
● 53		0517 080 12	* Bolt, Treatment (W/L.W, F.W)	1		WQ020001-	M8X12
54		0668 248 UA	* Radiator Ass'y	1		WQ020001-	
54-1		0668 248 02	** Plug, Drain	1		WQ020001-	
55		0667 800 UA	* Cooler Ass'y, Oil	1		WQ020001-	
56		D206 870 00	* Frame	1		WQ020001-	
57		D418 847 00	* Bracket	1		WQ020001-	
58		D522 280 00	* Duct	1		WQ020001-	
59		0775 551 85	* Hose, Radiator	1		WQ020001-	
60		D580 182 00	* Pad	4		WQ020001-	
61		D493 495 00	* Panel, Sponge	2		WQ020001-	
62		D493 488 00	* Panel, Sponge	2		WQ020001-	
63		D493 520 00	* Panel, Sponge	1		WQ020001-	
64		D493 672 00	* Panel, Sponge	2		WQ020001-	
65		D493 525 00	* Panel, Sponge	2		WQ020001-	
66		0517 080 16	* Bolt, Treatment (W/L.W, F.W)	6		WQ020001-	M8X16
67		0517 060 16	* Bolt, Treatment (W/L.W, F.W)	1		WQ020001-	M6X16
68		D493 726 00	* Panel, Sponge	1		WQ020001-	
69		0668 249 UA	* Opering, Filler	1		WQ020001-	
70		D493 647 00	* Panel, Sponge	1		WQ020001-	
71		D493 652 00	* Panel, Sponge	1		WQ020001-	
72		KEG661 72401	* Tank, Surge	1		WQ020001-	
73		K04724 00160	* Packing	1		WQ020001-	
74		K19420 32610	* Base, Oil Filter	1		WQ020001-	
75		K19420 32291	* Joint, Pipe	1		WQ020001-	
76		K04814 00150	* Ring, O	1		WQ020001-	
77		K04814 50600	* Ring, O	1		WQ020001-	
78		K16414 32434	* Cartridge, Oil Filter	1		WQ020001-	
79		0668 400 36	* Net, Dust	1		WQ020001-	Front
80		0668 400 37	* Net, Dust	1		WQ020001-	Rear
81		0517 080 20	* Bolt, Treatment (W/L.W, F.W)	4		WQ020001-	M8X20
82		0517 060 16	* Bolt, Treatment (W/L.W, F.W)	2		WQ020001-	M6X16
83		K19420 37202	* Collor	1		WQ020001-	

7

https://truckmanualshub.com/

[Memo]

https://truckmanualshub.com/

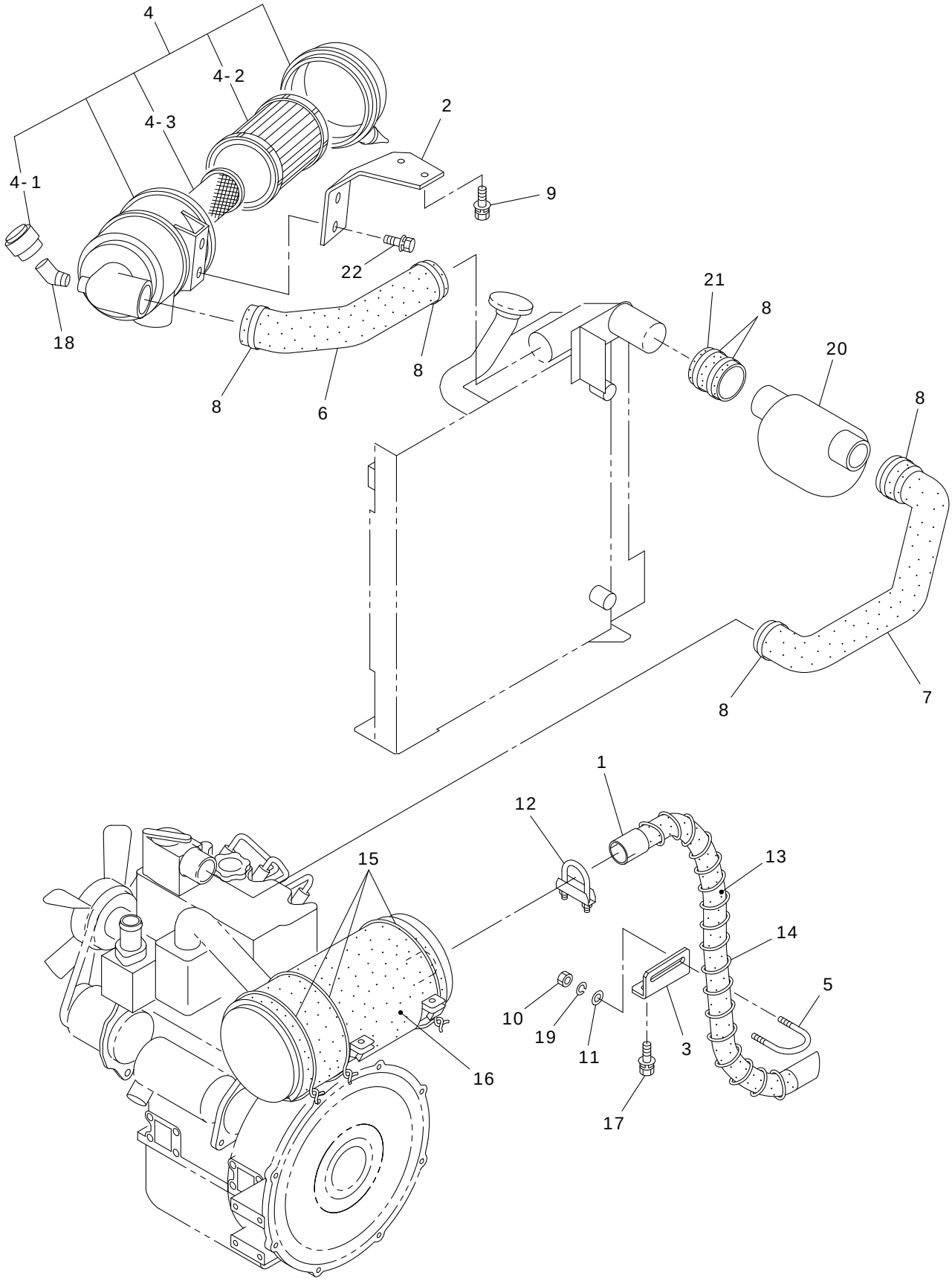

25V4-070200-1

https://truckmanualshub.com/

KEY No.	SUP.	PART No.	DESCRIPTION	Q'TY	CHAN.	SERIAL No.	REMARKS
● 0	×	F330 729 00	Air Cleaner & Muffler Ass'y	1		WQ010001-WQ020000	
1		D584 142 00	* Pipe, Tail	1		WQ010001-	
2		D418 899 00	* Bracket	1		WQ010001-	
3		D419 264 00	* Bracket	1		WQ010001-	
4		0745 266 UA	* Cleaner, Air	1		WQ010001-	
4-1		D525 004 00	** Indicator	1		WQ010001-	
4-2		0745 266 08	** Element Ass'y	1		WQ010001-	
4-3		0745 266 09	** Element Ass'y (Inner)	1		WQ010001-	
5		4003 020 01	* Bolt, U	1		WQ010001-	
6		0779 005 32	* Hose, Air Cleaner	1		WQ010001-	
7		0779 005 35	* Hose, Air Cleaner	1		WQ010001-	
8		0690 083 12	* Clamp, Hose	6		WQ010001-	
9		0518 100 20	* Bolt, Treatment (W/L.W, F.W)	2		WQ010001-	M10X20 P=1.25
10		0580 080 00	* Nut, Hex.	2		WQ010001-	M8
11		0595 080 00	* Washer, Treatment	2		WQ010001-	M8
12		0690 089 19	* Clamp	1		WQ010001-	
13		4459 598 00	* Tape, Insulating	2		WQ010001-	L=2000
14		0322 108 99	* Wire	M		WQ010001-	L=1000
15		0322 108 99	* Wire	M		WQ010001-	L=600X5
16		D469 012 00	* Panel	1		WQ010001-	
17		0517 080 20	* Bolt, Treatment (W/L.W, F.W)	2		WQ010001-	M8X20
18		0710 124 01	* Elbow, 45	1		WQ010001-	
19		0590 080 00	* Washer, Lock	2		WQ010001-	M8
20		0661 800 28	* Resonator	1		WQ010001-	
21		D070 313 00	* Hose	1		WQ010001-	
22		0517 080 25	* Bolt, Treatment (W/L.W, F.W)	2		WQ010001-	M8X25

7

https://truckmanualshub.com/

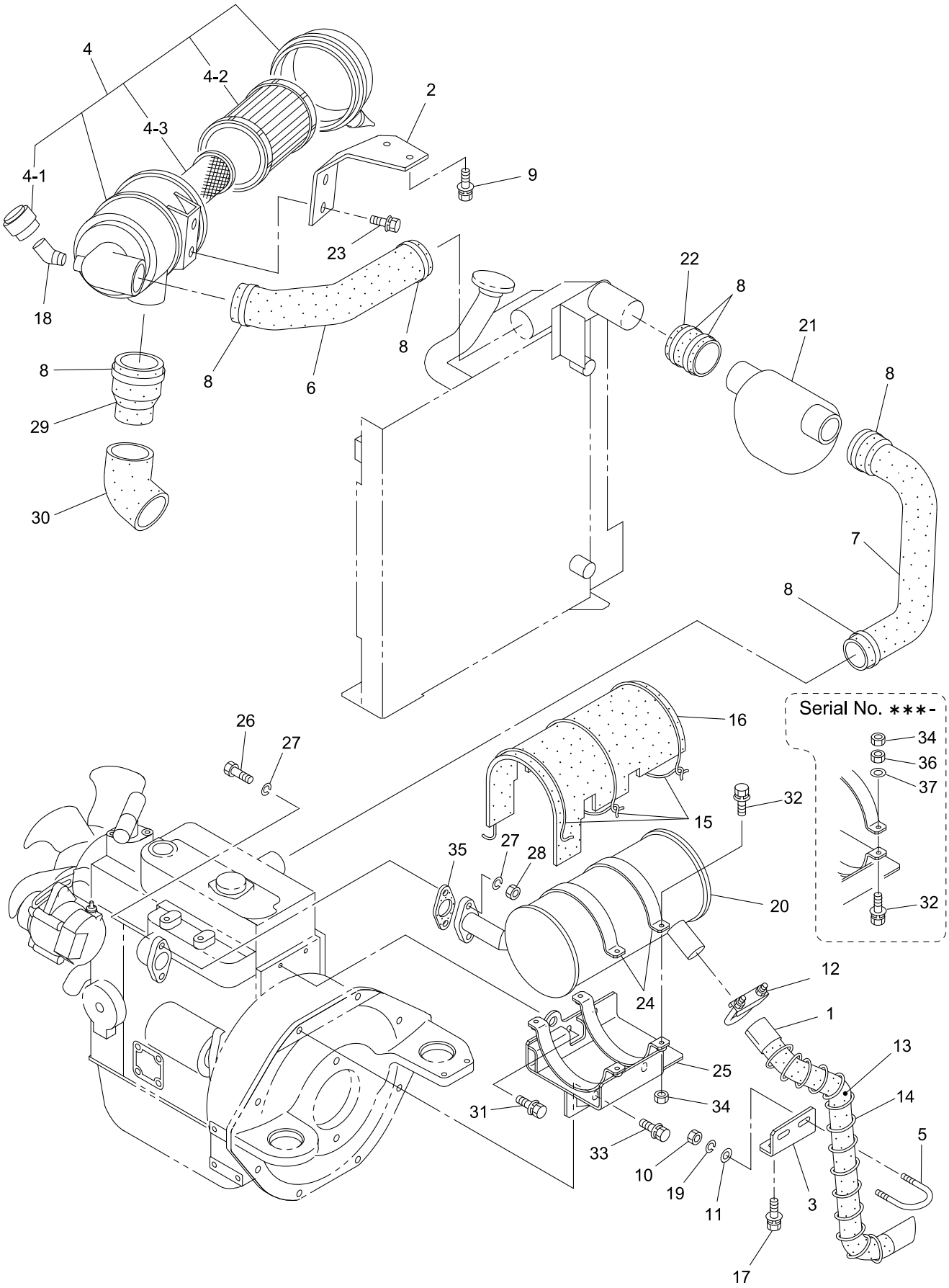

25V4-07020A-1

https://truckmanualshub.com/

KEY No.	SUP.	PART No.	DESCRIPTION	Q'TY	CHAN.	SERIAL No.	REMARKS
0	×	F330 723 00	Air Cleaner & Muffler Ass'y	1		WQ020001-	
1		D584 145 00	* Pipe, Tail	1		WQ020001-	
2		D418 899 00	* Bracket	1		WQ020001-	
3		D419 264 00	* Bracket	1		WQ020001-	
4		0745 266 UA	* Cleaner, Air	1		WQ020001-	
4-1		D525 004 00	** Indicator	1		WQ020001-	
4-2		0745 266 08	** Element Ass'y	1		WQ020001-	
4-3		0745 266 09	** Element Ass'y (Inner)	1		WQ020001-	
5		4003 020 01	* Bolt, U	1		WQ020001-	
6		0779 005 32	* Hose, Air Cleaner	1		WQ020001-	
7		0779 005 49	* Hose, Air Cleaner	1		WQ020001-	
● 8		0690 083 12	* Clamp, Hose	7		WQ020001-	
9		0518 100 20	* Bolt, Treatment (W/L.W, F.W)	2		WQ020001-	M10X20 P=1.25
10		0580 080 00	* Nut, Hex.	2		WQ020001-	M8
11		0595 080 00	* Washer, Treatment	2		WQ020001-	M8
● 12		0690 089 19	* Clamp	1		WQ020001-	
13		4459 598 00	* Tape, Insulating	2		WQ020001-	L=2000
14		0322 108 99	* Wire	M		WQ020001-	L=1000
15		0322 108 99	* Wire	M		WQ020001-	L=600X3
16		D469 016 00	* Panel	1		WQ020001-	
17		0517 080 20	* Bolt, Treatment (W/L.W, F.W)	2		WQ020001-	M8X20
18		0710 124 01	* Elbow, 45	1		WQ020001-	
19		0590 080 00	* Washer, Lock	2		WQ020001-	M8
20		0662 142 UA	* Muffler Ass'y	1		WQ020001-	
21		0661 800 28	* Resonator	1		WQ020001-	
22		D070 313 00	* Hose	1		WQ020001-	
23		0517 080 25	* Bolt, Treatment (W/L.W, F.W)	2		WQ020001-	M8X25
24		D245 048 00	* Band	2		WQ020001-	
● 25		D419 691 00	* Bracket	1		WQ020001-***	
● 25		D419 816 00	* Bracket	1	○	***-	
26		0514 100 45	* Bolt, Treatment	2		WQ020001-	M10X45 P=1.25
27		0590 100 00	* Washer, Lock	4		WQ020001-	M10
28		0535 100 00	* Nut, Treatment	2		WQ020001-	M10 P=1.25
29		0779 005 54	* Hose	1		WQ020001-	
30		0779 004 13	* Hose	1		WQ020001-	
31		0517 080 16	* Bolt, Treatment (W/L.W, F.W)	2		WQ020001-	M8X16
32		0517 080 35	* Bolt, Treatment (W/L.W, F.W)	4		WQ020001-	M8X35
33		0517 100 35	* Bolt, Treatment (W/L.W, F.W)	2		WQ020001-	M10X35
34		0581 080 00	* Nut, Lock	4		WQ020001-	M8
35		K15313 12370	* Gasket	1		WQ020001-	M8
● 36		0580 080 00	* Nut, Hex.	4		***-	M8
● 37		0593 080 00	* Washer, Flat	4		***-	M8

7

https://truckmanualshub.com/

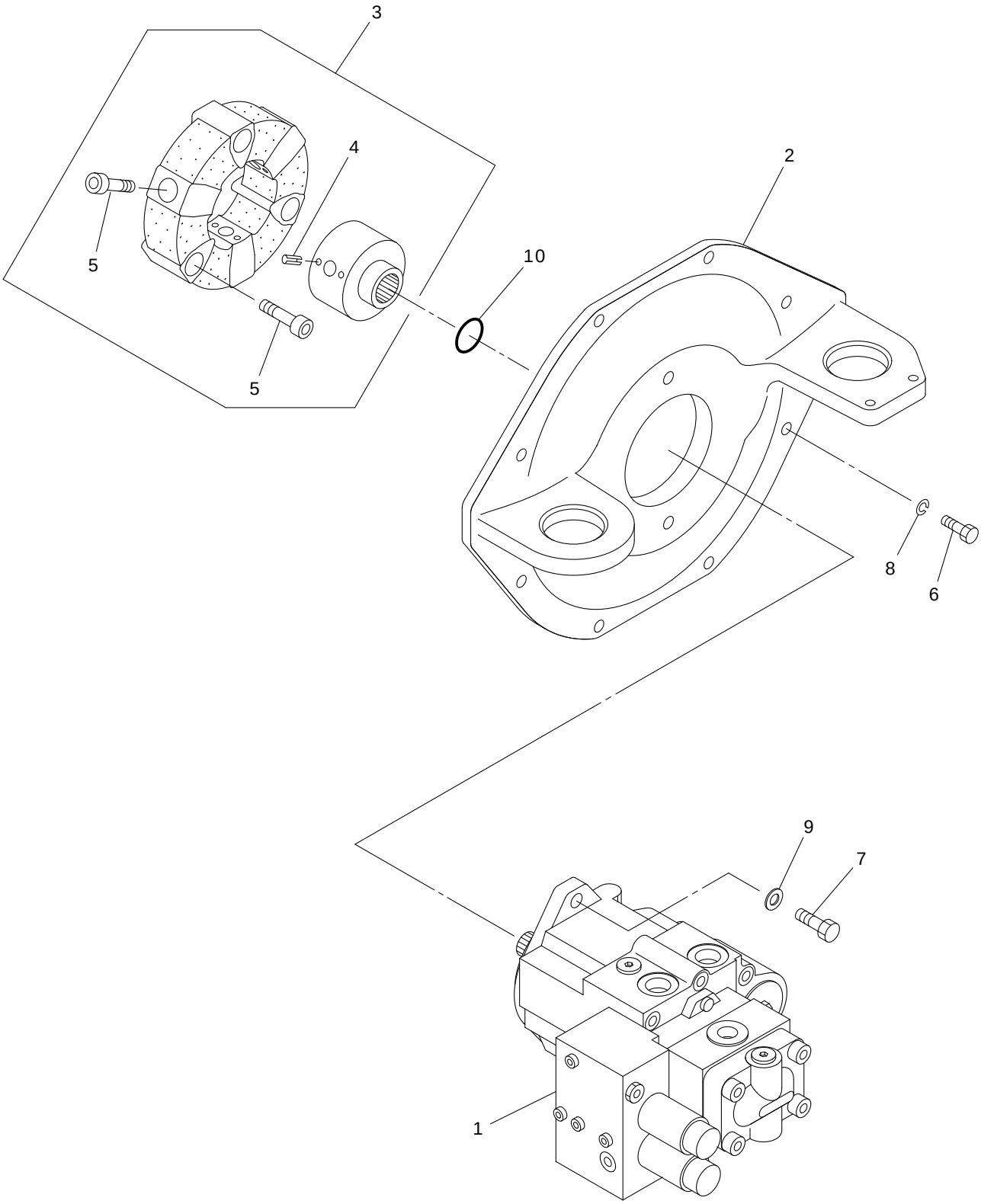

7

25V4-070300-1

https://truckmanualshub.com/

KEY No.	SUP.	PART No.	DESCRIPTION	Q'TY	CHAN.	SERIAL No.	REMARKS
0	×	F330 679 00	Dribve Device, Oil Pump	1		WQ010001-WQ020000	
1	#	0780 163 UA	* Pump Ass'y, Oil	1		WQ010001-	Sh. No. 5-7
2		D230 060 00	* Flange, Pump	1		WQ010001-	
3		0651 499 UA	* Coupling Ass'y	1		WQ010001-	
4		0494 606 08	** Pin, Spring	6		WQ010001-	d=4X8
5		0562 100 30	** Bolt, Socket Head	6		WQ010001-	M10X30
6		0513 100 25	* Bolt, Treatment	8		WQ010001-	M10X25
7		0513 120 35	* Bolt, Treatment	2		WQ010001-	M12X35
8		0590 100 00	* Washer, Lock	8		WQ010001-	M10
9		0595 120 00	* Washer, Treatment	2		WQ010001-	M12
10		0760 710 19	* Ring, O	1		WQ010001-	P18-90B

7

https://truckmanualshub.com/

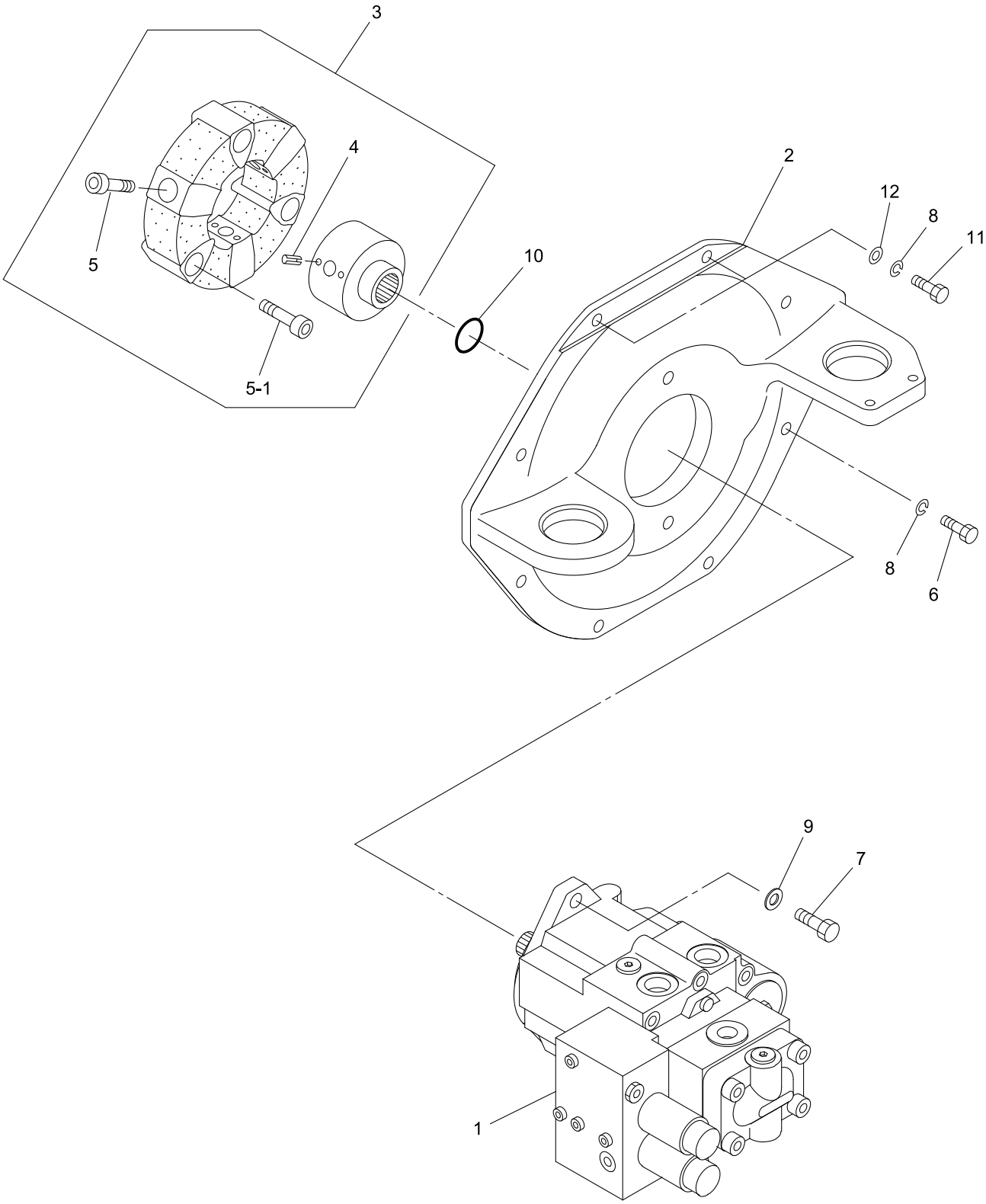

25V4-07030A-1

https://truckmanualshub.com/

KEY No.	SUP.	PART No.	DESCRIPTION	Q'TY	CHAN.	SERIAL No.	REMARKS
0	×	F330 725 00	Dribve Device, Oil Pump	1		WQ020001-	
1	#	0780 163 UA	* Pump Ass'y, Oil	1		WQ020001-	Sh. No. 5-7
2		D230 071 00	* Flange, Pump	1		WQ020001-	
● 3		0651 499 UA	* Coupling Ass'y	1		Not for use	
● 3		0657 005 UA	* Coupling Ass'y	1		WQ020001-	
4		0494 606 08	** Pin, Spring	6		WQ020001-	d=4X8
● 5		0562 100 30	** Bolt, Socket Head	3		WQ020001-	M10X30
● 5-1		0563 100 30	** Bolt, Socket Head(F)	3		WQ020001-	M10X30 P=1.25
6		0513 100 25	* Bolt, Treatment	6		WQ020001-	M10X25
7		0513 120 35	* Bolt, Treatment	2		WQ020001-	M12X35
8		0590 100 00	* Washer, Lock	8		WQ020001-	M10
9		0595 120 00	* Washer, Treatment	2		WQ020001-	M12
10		0760 710 19	* Ring, O	1		WQ020001-	P18-90B
11		0513 100 40	* Bolt, Treatment	2		WQ020001-	M10X40
12		0595 100 00	* Washer, Treatment	2		WQ020001-	M10

7

https://truckmanualshub.com/

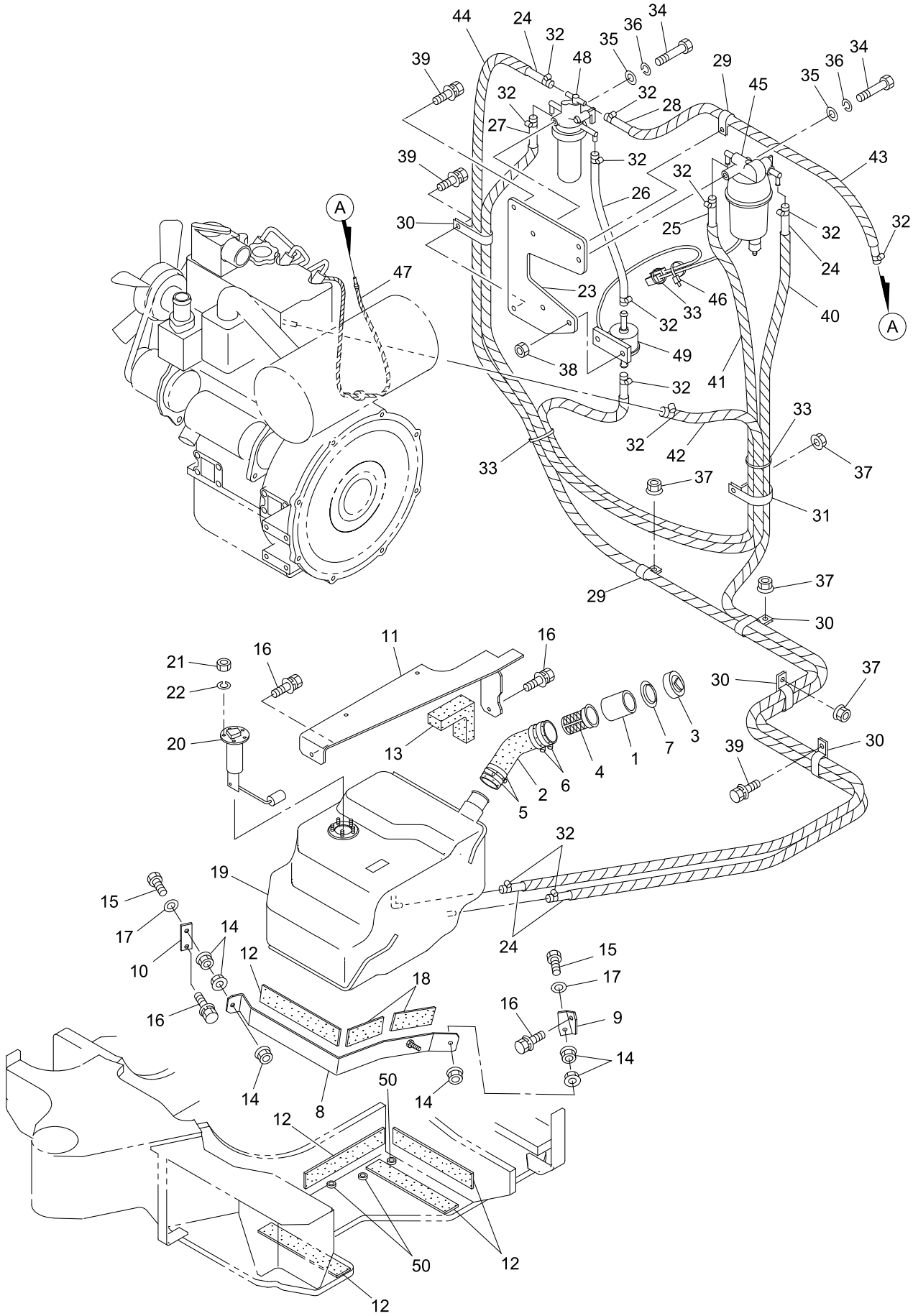

25V4-070400-1

https://truckmanualshub.com/

KEY No.	SUP.	PART No.	DESCRIPTION	Q'TY	CHAN.	SERIAL No.	REMARKS
0	×	F337 317 00	Tank Ass'y, Fuel	1		WQ010001-WQ020000	
0-1	×	F337 332 00	Piping Ass'y, Fuel	1		WQ010001-WQ020000	
1		0729 910 80	* Filter	1		WQ010001-	
2		D070 573 00	* Hose	1		WQ010001-	
3		0729 910 73	* Cap	1		WQ010001-	
4		0729 910 60	* Strainer	1		WQ010001-	
5		0690 083 12	* Clamp, Hose	2		WQ010001-	
6		0690 083 14	* Clamp, Hose	2		WQ010001-	
7		D550 063 00	* Seal	1		WQ010001-	
8		D083 153 00	* Clamp	1		WQ010001-	
9		D418 836 00	* Bracket	1		WQ010001-	
10		D419 218 00	* Bracket	1		WQ010001-	
11		D206 872 00	* Frame	1		WQ010001-	
12		D433 496 00	* Plate, Rubber	5		WQ010001-	
13		D493 651 00	* Panel, Sponge	1		WQ010001-	
14		0521 080 00	* Nut, Hex.(W/F.W)	6		WQ010001-	M8
15		0551 080 60	* Bolt, Hex.(Full-Thread)	2		WQ010001-	M8X60
16		0518 100 20	* Bolt, Treatment (W/L.W, F.W)	4		WQ010001-	M10X20 P=1.25
17		0593 080 00	* Washer, Flat	2		WQ010001-	M8
18		D433 504 00	* Plate, Rubber	2		WQ010001-	
19		D284 220 00	* Tank, Fuel	1		WQ010001-	
20		0857 909 UA	* Gauge, Fuel	1		WQ010001-	
21		0580 050 00	* Nut, Hex.	5		WQ010001-	M5
22		0590 050 00	* Washer, Lock	5		WQ010001-	M5
23		D419 253 00	* Bracket	1		WQ010001-	
24		4070 245 41	* Hose, Fuel	M		WQ010001-	L=2000X2
25		4070 245 18	* Hose, Fuel	M		WQ010001-	L=850
26		4070 245 63	* Hose, Fuel	M		WQ010001-	L=130
27		4070 245 56	* Hose, Fuel	M		WQ010001-	L=1000
28		4070 245 54	* Hose, Fuel	M		WQ010001-	L=270
29		4080 000 14	* Clamp, Hose	2		WQ010001-	
30		4080 000 29	* Clamp, Hose	4		WQ010001-	
31		4080 000 12	* Clamp, Hose	1		WQ010001-	
● 32		0690 081 90	* Clamp, Hose	12		WQ010001-	
33		0820 067 04	* Band, Cable	3		WQ010001-	
34		0550 080 70	* Bolt, Hex.	2		WQ010001-	M8X70
35		0593 080 00	* Washer, Flat	2		WQ010001-	M8
36		0590 080 00	* Washer, Lock	2		WQ010001-	M8
37		0524 100 00	* Nut, Hex. (W/F.W)	4		WQ010001-	M10 P=1.25
38		0521 060 00	* Nut, Hex.(W/F.W)	2		WQ010001-	M6
39		0518 100 20	* Bolt, Treatment (W/L.W, F.W)	3		WQ010001-	M10X20 P=1.25
40		0820 803 04	* Tube, Corrugate	M		WQ010001-	L=1900
41		0820 803 04	* Tube, Corrugate	M		WQ010001-	L=750
42		0820 803 04	* Tube, Corrugate	M		WQ010001-	L=900
43		0820 803 04	* Tube, Corrugate	M		WQ010001-	L=170
44		0820 803 04	* Tube, Corrugate	M		WQ010001-	L=1950
45		0857 914 UA	* Sedimenter, Water	1		WQ010001-	
45-1		0857 914 11	** Element Ass'y	1		WQ010001-	
46		0690 082 08	* Clamp, Hose	1		WQ010001-	
47		0820 803 02	* Tube, Corrugate	M		WQ010001-	L=350
48		E13030 6310	* Filter, Fuel	1		WQ010001-	
48-1		E36072 0060	** Element	1		WQ010001-	

https://truckmanualshub.com/

KEY No.	SUP.	PART No.	DESCRIPTION	Q'TY	CHAN.	SERIAL No.	REMARKS
49		E13050 6240	* Pump, Fuel	1		WQ010001-	
● 50		4006 529 00	* Washer, Rubber	3		WQ010001-	

7

https://truckmanualshub.com/

[Memo]

https://truckmanualshub.com/

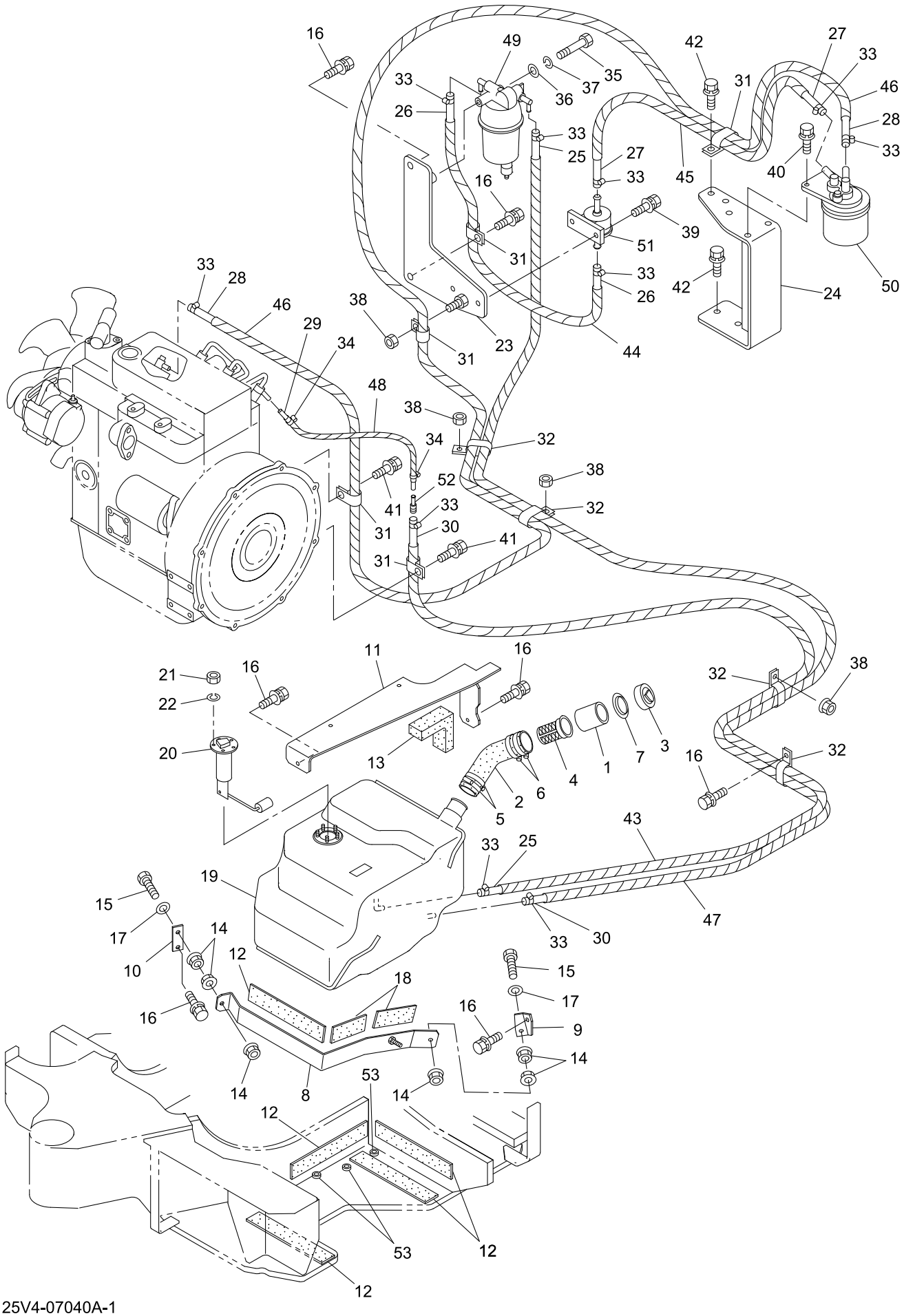

25V4-07040A-1

https://truckmanualshub.com/

KEY No.	SUP.	PART No.	DESCRIPTION	Q'TY	CHAN.	SERIAL No.	REMARKS
0	×	F337 317 00	Tank Ass'y, Fuel	1		WQ020001-	
0-1	×	F337 329 00	Piping Ass'y, Fuel	1		WQ020001-	
1		0729 910 80	* Filter	1		WQ020001-	
2		D070 573 00	* Hose	1		WQ020001-	
3		0729 910 73	* Cap	1		WQ020001-	
4		0729 910 60	* Strainer	1		WQ020001-	
5		0690 083 12	* Clamp, Hose	2		WQ020001-	
6		0690 083 14	* Clamp, Hose	2		WQ020001-	
7		D550 063 00	* Seal	1		WQ020001-	
8		D083 153 00	* Clamp	1		WQ020001-	
9		D418 836 00	* Bracket	1		WQ020001-	
10		D419 218 00	* Bracket	1		WQ020001-	
11		D206 872 00	* Frame	1		WQ020001-	
12		D433 496 00	* Plate, Rubber	5		WQ020001-	
13		D493 651 00	* Panel, Sponge	1		WQ020001-	
14		0521 080 00	* Nut, Hex.(W/F.W)	6		WQ020001-	M8
15		0551 080 60	* Bolt, Hex.(Full-Thread)	2		WQ020001-	M8X60
16		0518 100 20	* Bolt, Treatment (W/L.W, F.W)	6		WQ020001-	M10X20 P=1.25
17		0593 080 00	* Washer, Flat	2		WQ020001-	M8
18		D433 504 00	* Plate, Rubber	2		WQ020001-	
19		D284 220 00	* Tank, Fuel	1		WQ020001-	
20		0857 909 UA	* Gauge, Fuel	1		WQ020001-	
21		0580 050 00	* Nut, Hex.	5		WQ020001-	M5
22		0590 050 00	* Washer, Lock	5		WQ020001-	M5
23		D419 668 00	* Bracket	1		WQ020001-	
24		D419 665 00	* Bracket	1		WQ020001-	
25		4070 245 45	* Hose, Fuel	M		WQ020001-	L=2040
26		4070 245 13	* Hose, Fuel	M		WQ020001-	L=550
27		4070 245 39	* Hose, Fuel	M		WQ020001-	L=450
28		4070 245 38	* Hose, Fuel	M		WQ020001-	L=1600
29		4070 899 03	* Hose, Fuel	M		WQ020001-	L=310
● 30		4070 245 36	* Hose, Fuel	M		WQ020001-	L=1100
31		4080 000 14	* Clamp, Hose	5		WQ020001-	
32		4080 000 29	* Clamp, Hose	4		WQ020001-	
● 33		0690 081 90	* Clamp, Hose	10		WQ020001-	
34		0690 081 90	* Clamp, Hose	2		WQ020001-	
35		0550 080 70	* Bolt, Hex.	1		WQ020001-	M8X70
36		0593 080 00	* Washer, Flat	1		WQ020001-	M8
37		0590 080 00	* Washer, Lock	1		WQ020001-	M8
38		0524 100 00	* Nut, Hex. (W/F.W)	4		WQ020001-	M10 P=1.25
● 39		0517 060 12	* Bolt, Treatment (W/L.W, F.W)	2		WQ020001-	M6X12
40		0517 080 25	* Bolt, Treatment (W/L.W, F.W)	2		WQ020001-	M8X25
41		0518 100 16	* Bolt, Treatment (W/L.W, F.W)	2		WQ020001-	M10X16 P=1.25
42		0518 100 25	* Bolt, Treatment (W/L.W, F.W)	3		WQ020001-	M10X25 P=1.25
43		0820 803 04	* Tube, Corrugate	M		WQ020001-	L=1940
44		0820 803 04	* Tube, Corrugate	M		WQ020001-	L=450
45		0820 803 04	* Tube, Corrugate	M		WQ020001-	L=350
46		0820 803 04	* Tube, Corrugate	M		WQ020001-	L=1500
● 47		0820 803 04	* Tube, Corrugate	M		WQ020001-	L=1000
48		0820 803 02	* Tube, Corrugate	M		WQ020001-	L=210
49		0857 914 UA	* Sedimenter, Water	1		WQ020001-	
49-1		0857 914 11	** Element Ass'y	1		WQ020001-	

https://truckmanualshub.com/

KEY No.	SUP.	PART No.	DESCRIPTION	Q'TY	CHAN.	SERIAL No.	REMARKS
50		K15221 43170	* Cartridge, Fuel Filter	1		WQ020001-	
51		KR1401 51352	* Pump, Fuel	1		WQ020001-	
52		K17490 42360	* Joint, Pipe	1		WQ020001-	
● 53		4006 529 00	* Washer, Rubber	3		WQ020001-	

7

https://truckmanualshub.com/

[Memo]

https://truckmanualshub.com/

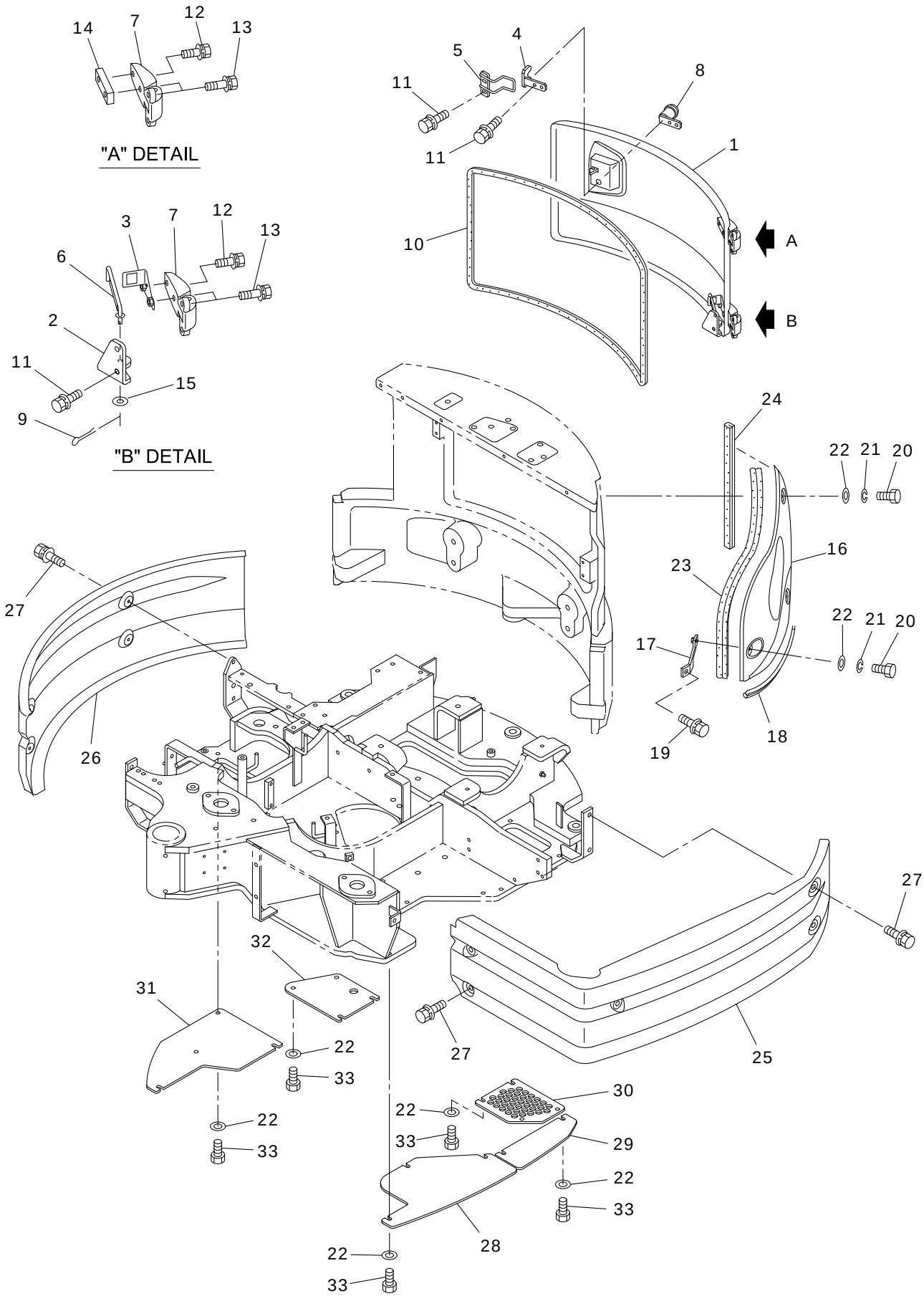

25V4-080100-1

https://truckmanualshub.com/

KEY No.	SUP.	PART No.	DESCRIPTION	Q'TY	CHAN.	SERIAL No.	REMARKS
0	×	F355 311 00	Cover Ass'y	1		WQ010001-	
0-1	×	F361 759 00	Cover Ass'y	1		WQ010001-	
1		D458 054 00	* Cover	1		WQ010001-	
2		D418 907 00	* Bracket	1		WQ010001-* * *	
2		D419 542 00	* Bracket	1	○	* * *-	
3		D418 908 00	* Bracket	1		WQ010001-	
4		D418 909 00	* Bracket	1		WQ010001-	
5		D418 910 00	* Bracket	1		WQ010001-	
6		D260 494 00	* Stay	1		WQ010001-* * *	
6		D260 552 00	* Stay	1	○	* * *-	
7		0690 016 19	* Hinge	2		WQ010001-	
8		0690 220 91	* Lock Ass'y	1		WQ010001-	
9		0599 010 15	* Pin, Cotter	1		WQ010001-	d=1.6X15
10		0910 870 05	* Seal	M		WQ010001-	L=2440
11		0517 080 16	* Bolt, Treatment (W/L.W, F.W)	6		WQ010001-	M8X16
12		0517 080 30	* Bolt, Treatment (W/L.W, F.W)	2		WQ010001-	M8X30
13		0517 080 35	* Bolt, Treatment (W/L.W, F.W)	6		WQ010001-	M8X35
14		D400 273 00	* Plate	1		WQ010001-	
15		0593 060 00	* Washer, Flat	1		WQ010001-	M6
16		D458 195 00	* Cover	1		WQ010001-	
17		D418 941 00	* Bracket	1		WQ010001-	
18		0910 870 05	* Seal	M		WQ010001-	L=465
19		0518 100 25	* Bolt, Treatment (W/L.W, F.W)	1		WQ010001-	M10X25 P=1.25
20		0550 100 20	* Bolt, Hex.	3		WQ010001-	M10X20
21		0590 100 00	* Washer, Lock	3		WQ010001-	M10
22		0593 100 00	* Washer, Flat	20		WQ010001-	M10
23		0910 870 05	* Seal	M		WQ010001-	L=850
24		4550 519 00	* Seal	M		WQ010001-	L=460
25		D458 055 00	* Cover	1		WQ010001-	
26		D458 056 00	* Cover	1		WQ010001-	
27		0518 100 20	* Bolt, Treatment (W/L.W, F.W)	9		WQ010001-	M10X20 P=1.25
28		D458 283 00	* Cover	1		WQ010001-	
29		D458 284 00	* Cover	1		WQ010001-	
● 30		D458 285 00	* Cover	1		WQ010001-WQ020000	
● 30		D458 301 00	* Cover	1		WQ020001-	
31		D458 286 00	* Cover	1		WQ010001-	
32		D458 454 00	* Cover	1		WQ010001-	
33		0480 100 20	* Bolt, Treatment (W/Flange)	17		WQ010001-	M10X20 P=1.25

8

https://truckmanualshub.com/

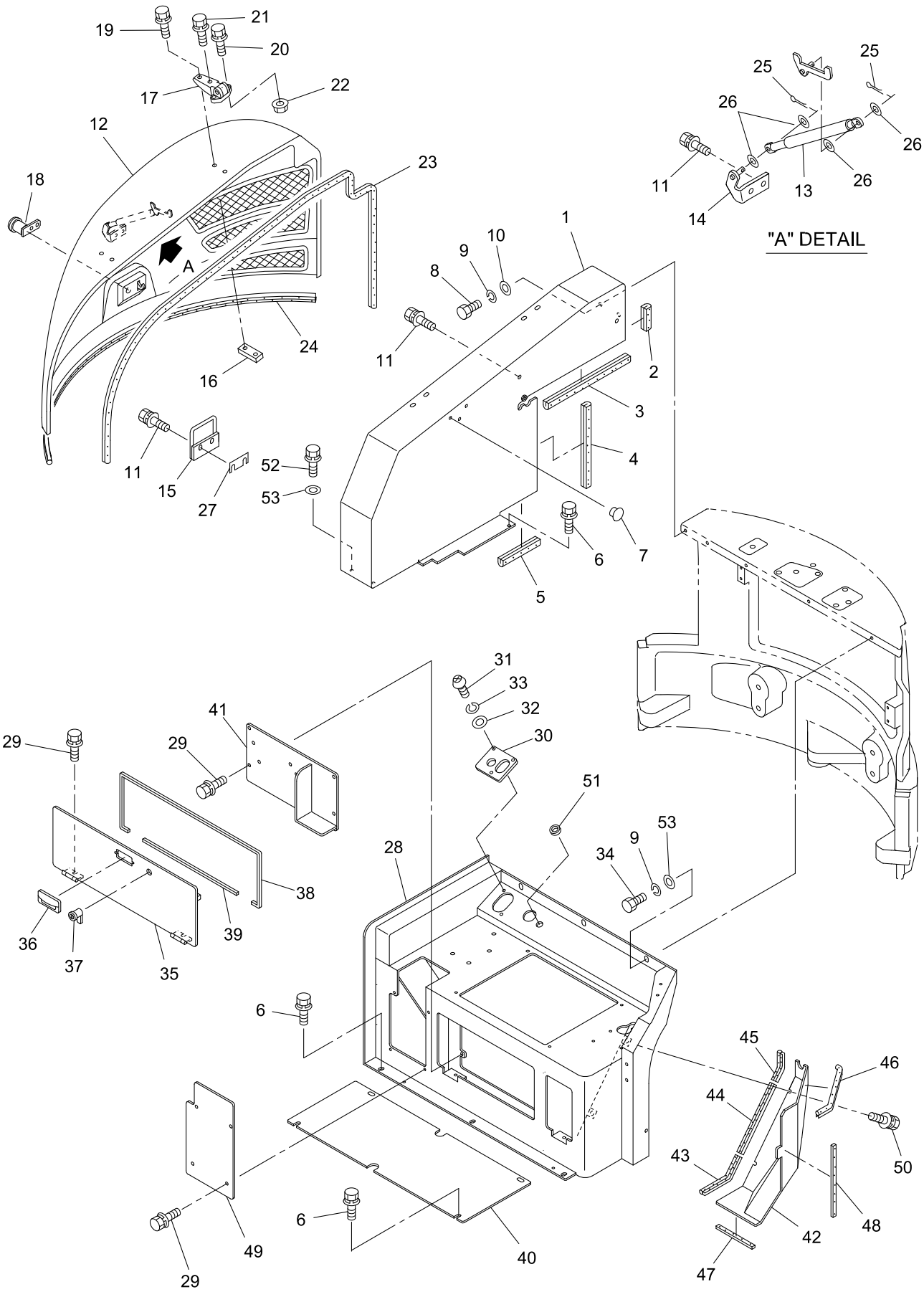

25V4-080200-1

https://truckmanualshub.com/

KEY No.	SUP.	PART No.	DESCRIPTION	Q'TY	CHAN.	SERIAL No.	REMARKS
0	×	F355 311 00	Cover Ass'y	1		WQ010001-	
0-1	×	F361 759 00	Cover Ass'y	1		WQ010001-	
1		D458 583 00	* Cover	1		WQ010001-***	
1		D458 715 00	* Cover	1	○	***-	
2		4550 519 00	* Seal	M		WQ010001-	L=80
3		4550 519 00	* Seal	M		WQ010001-	L=375
4		4550 519 00	* Seal	M		WQ010001-	L=350
5		4550 519 00	* Seal	M		WQ010001-	L=95
6		0518 100 25	* Bolt, Treatment (W/L.W, F.W)	21		WQ010001-	M10X25 P=1.25
7		0690 201 08	* Plug, Hole	3		WQ010001-	
8		0550 100 25	* Bolt, Hex.	2		WQ010001-	M10X25
9		0590 100 00	* Washer, Lock	5		WQ010001-	M10
● 10		0593 100 00	* Washer, Flat	2		WQ010001-	M10
11		0518 100 20	* Bolt, Treatment (W/L.W, F.W)	6		WQ010001-	M10X20 P=1.25
12		D458 071 00	* Cover	1		WQ010001-	
13		0652 271 UA	* Stay, Dumper	1		WQ010001-	
14		D418 927 00	* Bracket	1		WQ010001-	
15		D419 290 00	* Bracket	1		WQ010001-* * *	
15		D419 451 00	* Bracket	1	○	* * *-	
16		D400 273 00	* Plate	2		WQ010001-	
17		0690 016 19	* Hinge	2		WQ010001-	
18		0690 220 91	* Lock Ass'y	1		WQ010001-	
19		0517 080 30	* Bolt, Treatment (W/L.W, F.W)	2		WQ010001-	M8X30
20		0517 080 35	* Bolt, Treatment (W/L.W, F.W)	4		WQ010001-	M8X35
21		0517 080 40	* Bolt, Treatment (W/L.W, F.W)	2		WQ010001-	M8X40
22		0521 080 00	* Nut, Hex. (W/F.W)	4		WQ010001-	M8
23		4550 726 00	* Seal	M		WQ010001-	L=2060
24		0910 870 05	* Seal	M		WQ010001-	L=1490
25		4016 030 04	* Pin, Snap	2		WQ010001-	
26		0593 080 00	* Washer, Flat	4		WQ010001-	M8
27		D007 147 00	* Shim	1		WQ010001-	
28		D206 906 00	* Frame	1		WQ010001-***	
28		D206 935 00	* Frame	1	○	***-	
29		0517 080 20	* Bolt, Treatment (W/L.W, F.W)	10		WQ010001-	M8X20
30		D418 969 00	* Bracket	1		WQ010001-WQ020000	
30		D418 970 00	* Bracket	1		WQ020001-	
31		4004 364 01	* Bolt, Button Head	2		WQ010001-	M6X18
32		0594 060 00	* Washer, Flat	2		WQ010001-	M6
33		0596 060 00	* Washer, Lock	2		WQ010001-	M6
34		0550 100 20	* Bolt, Hex.	3		WQ010001-	M10X20
35		D458 236 00	* Cover	1		WQ010001-	
36		0690 211 08	* Handle	1		WQ010001-	
37		0690 220 92	* Lock Ass'y	1		WQ010001-	
38		D551 006 01	* Seal	1		WQ010001-	L=1000
39		D551 006 02	* Seal	1		WQ010001-	L=410
40		D418 564 00	* Bracket	1		WQ010001-	
41		D458 435 00	* Cover	1		WQ010001-	
42		D458 461 00	* Cover	1		WQ010001-	
43		0910 870 05	* Seal	M		WQ010001-	L=160
44		0910 870 05	* Seal	M		WQ010001-	L=225
45		0910 870 05	* Seal	M		WQ010001-	L=110
46		0910 870 05	* Seal	M		WQ010001-	L=270

https://truckmanualshub.com/

KEY No.	SUP.	PART No.	DESCRIPTION	Q'TY	CHAN.	SERIAL No.	REMARKS
47		D551 009 04	* Seal	1		WQ010001-	L=160
48		D551 009 05	* Seal	1		WQ010001-	L=270
49		D458 514 00	* Cover	1		WQ010001-	
49-1		D458 515 00	* Cover	1		WQ010001-	For Car Heater
50		0517 080 25	* Bolt, Treatment (W/L.W, F.W)	2		WQ010001-	M8X25
51		0910 940 24	* Grommet	1		***-	
52		0520 100 25	* Bolt, Treatment (W/L.W)	2		WQ010001-	M10X25 P=1.25
● 53		4006 119 02	* Washer, Flat	5		WQ010001-	M10

8

https://truckmanualshub.com/

[Memo]

https://truckmanualshub.com/

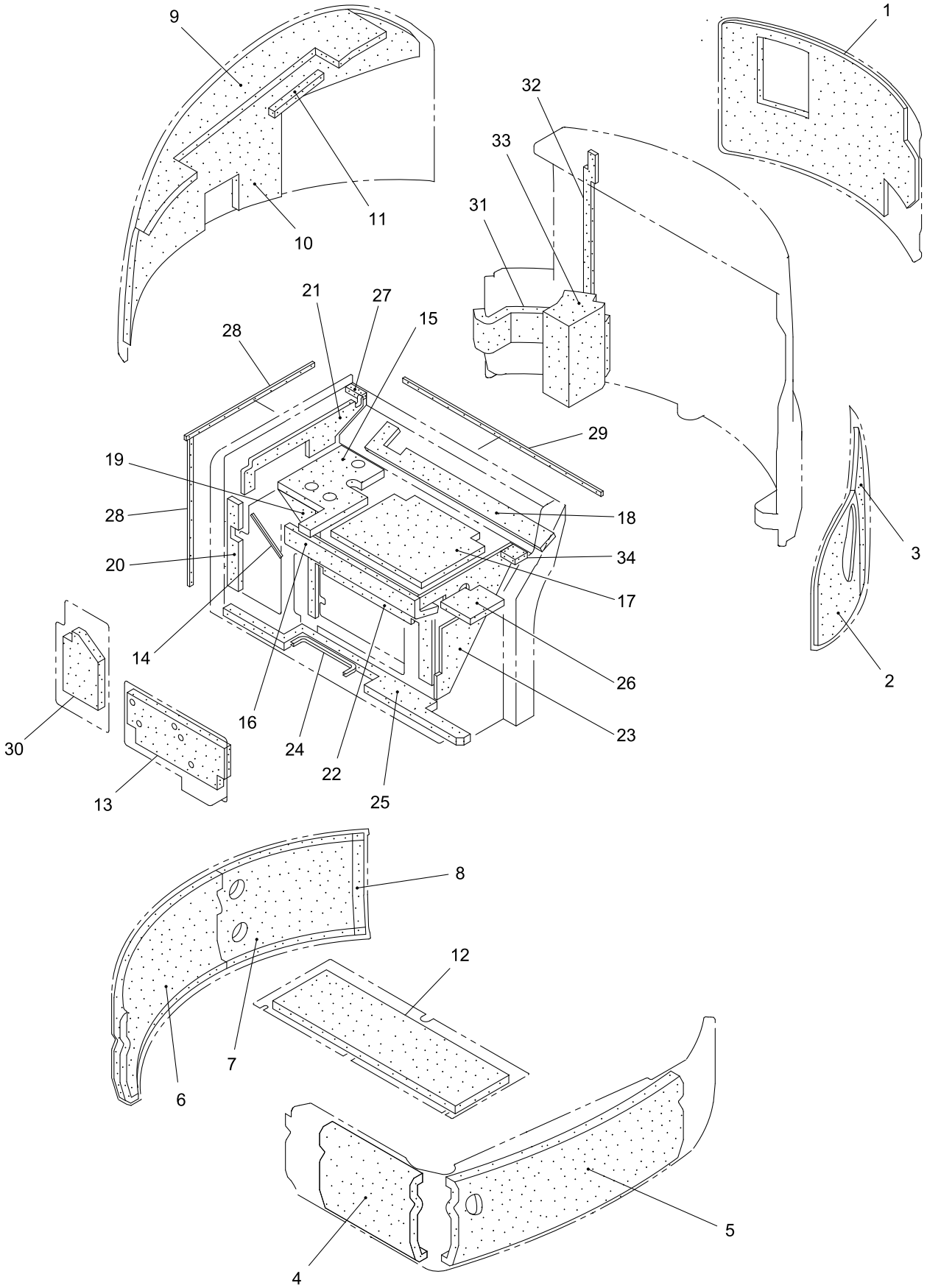

25V4-080300-1

https://truckmanualshub.com/

KEY No.	SUP.	PART No.	DESCRIPTION	Q'TY	CHAN.	SERIAL No.	REMARKS
0	×	F355 195 00	Absorbent Ass'y, Noise	1		WQ010001-	
0-1	×	F361 718 00	Absorbent Ass'y, Noise	1		WQ010001-	
0-2	×	F373 216 00	Absorbent Ass'y, Noise	1		WQ010001-	
1		D493 506 00	* Panel, Sponge	1		WQ010001-	
2		D493 671 00	* Panel, Sponge	1		WQ010001-	
3		D493 673 00	* Panel, Sponge	1		WQ010001-	
4		D493 675 00	* Panel, Sponge	1		WQ010001-	
5		D493 511 00	* Panel, Sponge	1		WQ010001-	
6		D493 512 00	* Panel, Sponge	1		WQ010001-	
7		D493 513 00	* Panel, Sponge	1		WQ010001-	
8		D493 514 00	* Panel, Sponge	1		WQ010001-	
9		D493 670 00	* Panel, Sponge	1		WQ010001-	
10		D493 669 00	* Panel, Sponge	1		WQ010001-	
11		D493 674 00	* Panel, Sponge	1		WQ010001-	
12		D493 434 00	* Panel, Sponge	1		WQ010001-	
13		D493 639 00	* Panel, Sponge	1		WQ010001-	
14		D551 007 01	* Seal	1		WQ010001-	L=155
15		D493 462 00	* Panel, Sponge	1		WQ010001-	
16		D493 463 00	* Panel, Sponge	1		WQ010001-	
17		D493 478 00	* Panel, Sponge	1		WQ010001-	
18		D493 654 00	* Panel, Sponge	1		WQ010001-	
● 18		D493 654 00	* Panel, Sponge	1		WQ010001-* * *	
● 18		D493 835 00	* Panel, Sponge	1	○	* * *-	
19		D493 480 00	* Panel, Sponge	1		WQ010001-	
20		D493 481 00	* Panel, Sponge	1		WQ010001-	
21		D493 482 00	* Panel, Sponge	1		WQ010001-	
22		D493 483 00	* Panel, Sponge	1		WQ010001-	
23		D493 484 00	* Panel, Sponge	1		WQ010001-	
24		4550 519 00	* Seal	M		WQ010001-	L=250
25		D493 653 00	* Panel, Sponge	1		WQ010001-	
26		D493 679 00	* Panel, Sponge	1		WQ010001-	
27		D493 680 00	* Panel, Sponge	1		WQ010001-	
28		D551 009 06	* Panel, Sponge	2		WQ010001-	
29		D551 009 07	* Panel, Sponge	1		WQ010001-	
30		D493 721 00	* Panel, Sponge	1		WQ010001-	
31		D493 634 00	* Panel, Sponge	1		WQ010001-	
32		D493 664 00	* Panel, Sponge	1		WQ010001-	
33		D493 666 00	* Panel, Sponge	1		WQ010001-	
● 34		D493 918 00	* Panel, Sponge	1		WQ010001-	

8

https://truckmanualshub.com/

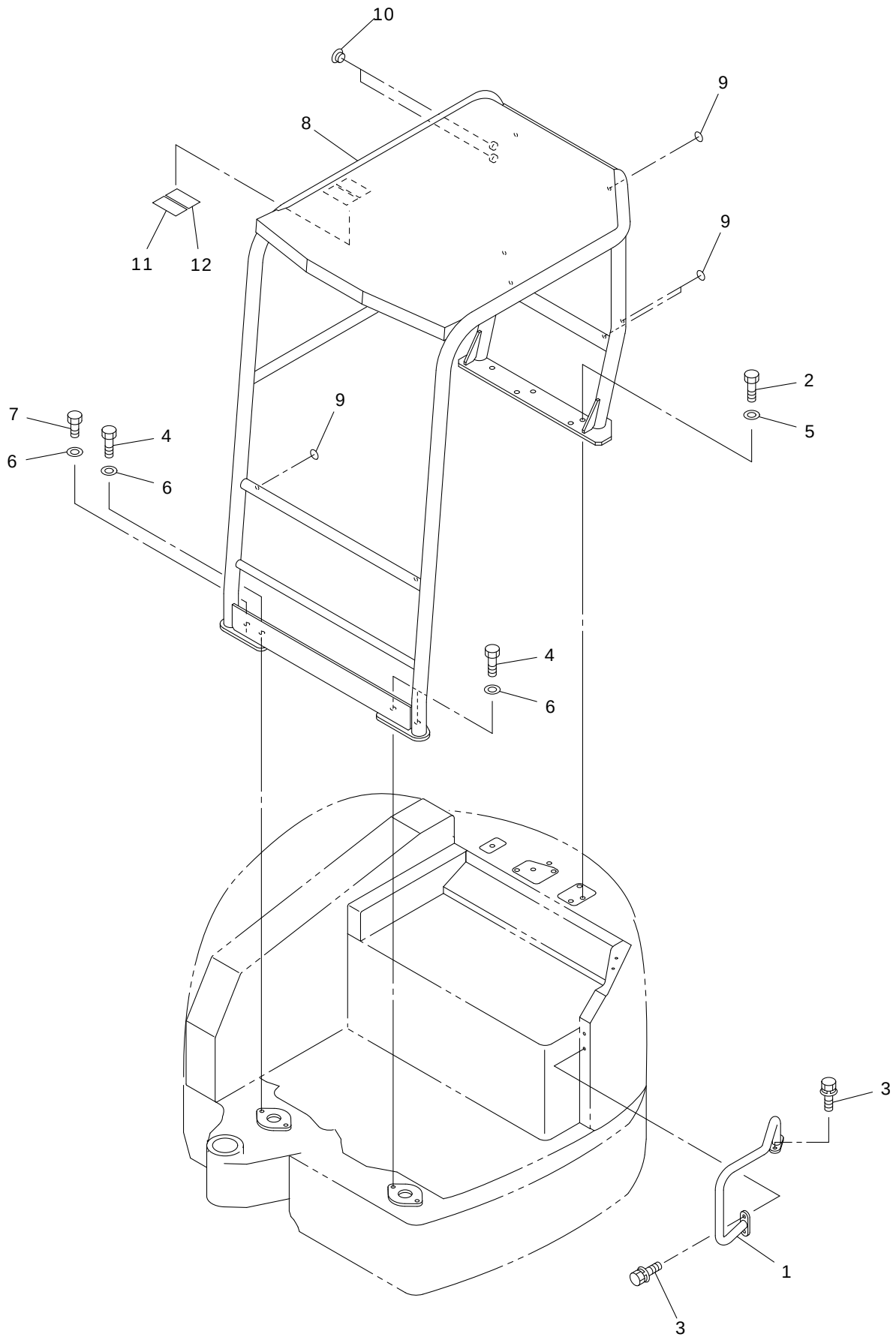

25V4-080400-1

https://truckmanualshub.com/

KEY No.	SUP.	PART No.	DESCRIPTION	Q'TY	CHAN.	SERIAL No.	REMARKS
0	×	F355 211 00	Canopy Ass'y (For Tops/Rops)	1		WQ010001-	
0-1	×	F355 221 00	Canopy Ass'y (For Tops/Rops)	1		WQ010001-	
1		D470 805 00	* Guard	1		WQ010001-	
2		0555 160 50	* Bolt, Treatment	5		WQ010001-	M16X50
3		0439 100 25	* Bolt, Treatment (W/L.W, F.W)	4		WQ010001-	M10X25 P=1.25
4		0555 120 40	* Bolt, Treatment	3		WQ010001-	M12X40
5		0595 160 00	* Washer, Treatment	5		WQ010001-	M16
6		0595 120 00	* Washer, Treatment	4		WQ010001-	M12
7		0555 120 25	* Bolt, Treatment	1		WQ010001-	M12X25
8		D206 875 00	* Frame	1		WQ010001-	
9		D405 272 00	* Seal	8		WQ010001-	
10		0690 201 08	* Plug, Hole	2		WQ010001-	M10
11		D408 376 00	* Decal (For Tops)	1		WQ010001-	
12		D408 375 00	* Decal (For Rops)	1		WQ010001-	

https://truckmanualshub.com/

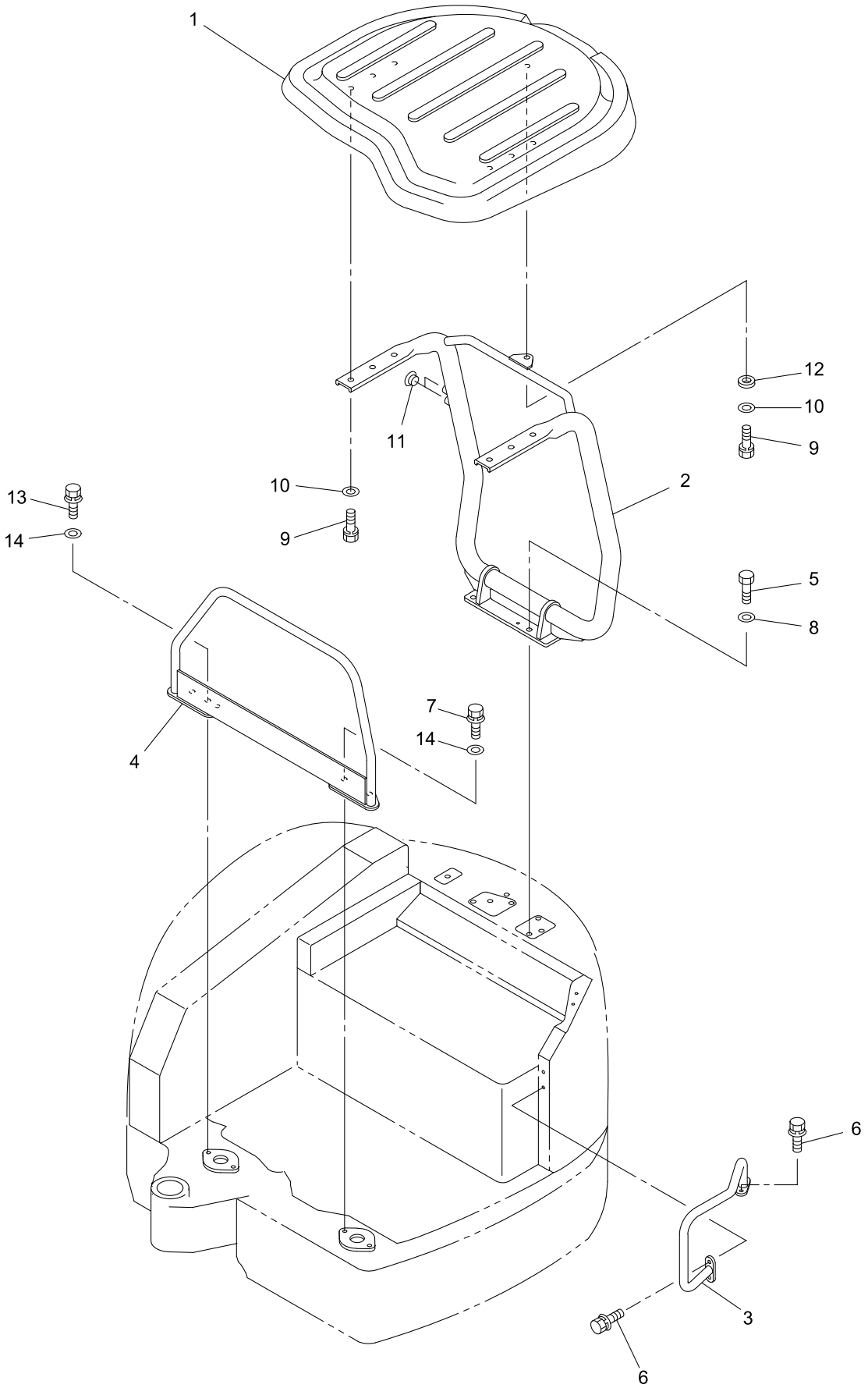

V4ALL-08040A-1

https://truckmanualshub.com/

	KEY No.	SUP.	PART No.	DESCRIPTION	Q'TY	CHAN.	SERIAL No.	REMARKS
●	0	×	F355 298 00	Canopy Ass'y	1		WQ010001-	
	1		D448 005 00	* Canopy	1		WQ010001-	
	2		D206 873 00	* Frame	1		WQ010001-	
	3		D470 805 00	* Guard	1		WQ010001-	
	4		D470 700 00	* Guard	1		WQ010001-	
	5		0555 160 50	* Bolt, Treatment	4		WQ010001-	M16X50
	6		0439 100 25	* Bolt, Treatment (W/L.W, F.W)	4		WQ010001-	M10X25 P=1.25
●	7		0555 120 40	* Bolt, Treatment	3		WQ010001-	M12X40
	8		0595 160 00	* Washer, Treatment	4		WQ010001-	M16
	9		0519 080 25	* Bolt, Treatment (W/L.W)	7		WQ010001-	M8X25
	10		4006 119 01	* Washer	7		WQ010001-	M8
	11		0690 201 08	* Plug	2		WQ010001-	M10
	12		4006 386 00	* Washer, Rubber	1		WQ010001-	
●	13		0555 120 25	* Bolt, Treatment	1		WQ010001-	M12X25
●	14		0595 120 00	* Washer, Treatment	4		WQ010001-	M12

8

https://truckmanualshub.com/

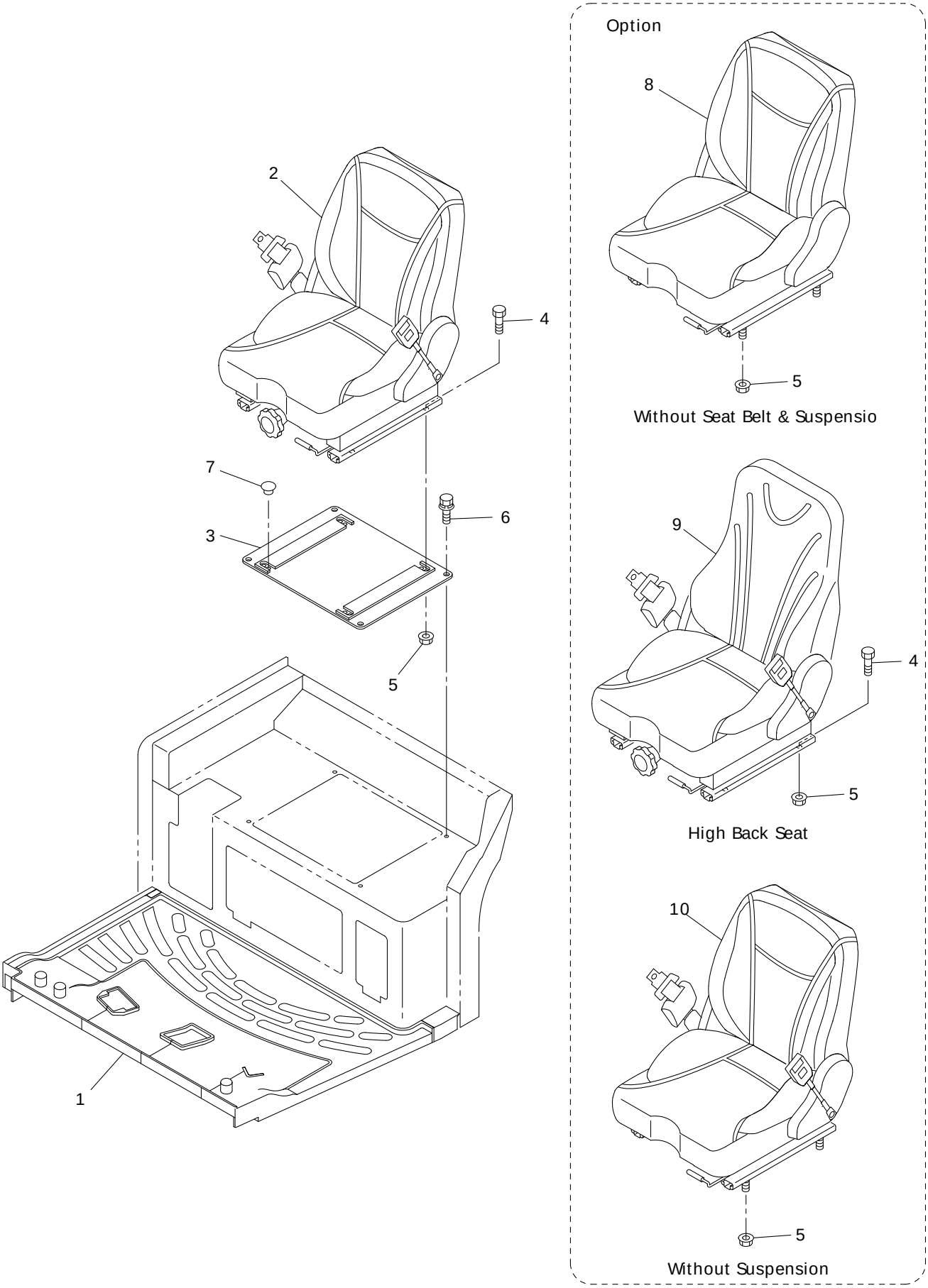

V4ALL-080500-1

https://truckmanualshub.com/

	KEY No.	SUP.	PART No.	DESCRIPTION	Q'TY	CHAN.	SERIAL No.	REMARKS
●	0	×	F355 306 00	Seat Ass'y, Operator (W/Suspension)	1		WQ010001-	
●	0-1	×	F355 303 00	Seat Ass'y, Operator	1		WQ010001-	
●	0-2	×	F355 304 00	Seat Ass'y, Operator	1		WQ010001-	
●	0-3	×	F355 305 00	Seat Ass'y, Operator	1		WQ010001-	
	0-4	×	F353 206 00	Mat Ass'y	1		WQ010001-	
	1		D581 191 00	* Mat (For Canopy)	1		WQ010001-	STD
	1-1		D581 203 00	* Mat (For Canopy, Pedal)	1		WQ010001-	
	1-2		D581 204 00	* Mat (For Cabin)	1		WQ010001-	
	1-3		D581 205 00	* Mat (For Cabin, Pedal)	1		WQ010001-	
	2		0655 563 UA	* Seat, Operator (W/Suspension)	1		WQ010001-	W/Seat Belt
	2-1		0655 563 01	** Seat Ass'y, Back	1		WQ010001-	
	2-2		0655 563 02	** Seat Ass'y, Cushion	1		WQ010001-	
	2-3		0655 563 03	** Suspension Ass'y	1		WQ010001-	
	2-4		0655 563 04	** Rail Ass'y, Slid (L.H)	1		WQ010001-	
	2-5		0655 563 05	** Rail Ass'y, Slid (R.H)	1		WQ010001-	
	2-6		0655 563 10	** Belt Ass'y, Seat	1		WQ010001-	
	3		D419 344 00	* Bracket	1		WQ010001-	
	4		0550 080 20	* Bolt, Hex.	4		WQ010001-	M8X20
	5		0521 080 00	* Nut, Hex. (W/F.W)	4		WQ010001-	M8
●	6		0439 100 20	* Bolt, Treatment (W/L.W, F.W)	4		WQ010001-* * *	M10X20 P=1.25
●	6		0518 100 20	* Bolt, Treatment (W/L.W, F.W)	4	○	* * *-	M10X20 P=1.25
	7		0690 201 09	* Plug	4		WQ010001-	
	8		0655 567 UA	* Seat, Operator (W/O Seat Belt)	1		WQ010001-	
	9		0655 568 UA	* Seat, Operator (High Back Seat)	1		WQ010001-	Leather
	9-1		0655 569 UA	* Seat, Operator (High Back Seat)	1		WQ010001-	Fabric
	9-2		0655 568 01	** Seat Ass'y, Back	1		WQ010001-	Leather
	9-3		0655 569 01	** Seat Ass'y, Back	1		WQ010001-	Fabric
	9-4		0655 569 02	** Seat Ass'y, Cushion	1		WQ010001-	Fabric
	10		0655 564 UA	* Seat, Operator (Leather)	1		WQ010001-	W/O Suspension

8

https://truckmanualshub.com/

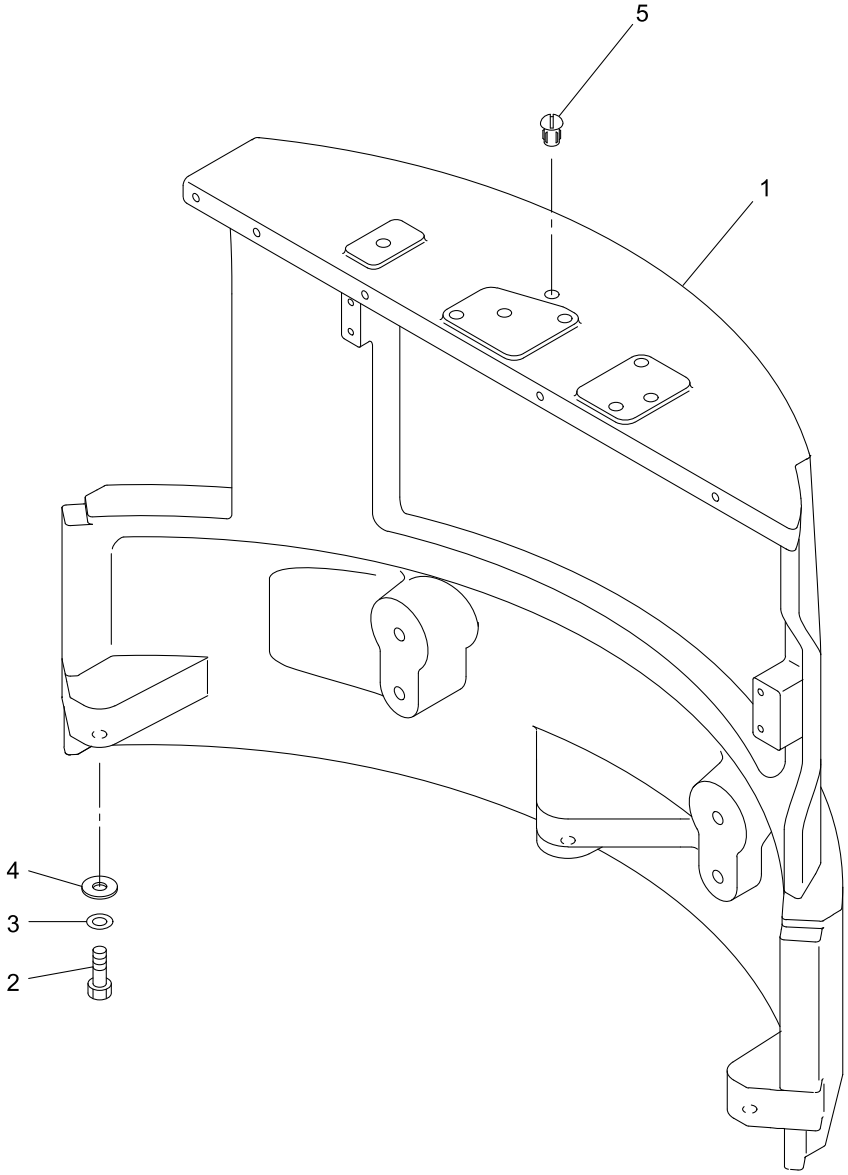

25V4-080600-1

https://truckmanualshub.com/

KEY No.	SUP.	PART No.	DESCRIPTION	Q'TY	CHAN.	SERIAL No.	REMARKS
● 0	×	F373 234 00	Weight Ass'y, Counter	1		WQ010001-	
1		D206 826 00	* Weight, Counter	1		WQ010001-	
2		0555 160 70	* Bolt, Treatment	3		WQ000001-	M16X70
3		0595 160 00	* Washer, Treatment	3		WQ000001-	M16
4		D006 038 00	* Washer	3		WQ010001-	
● 5		D528 011 04	* Bolt, Cap	1		WQ010001-	M16

8

https://truckmanualshub.com/

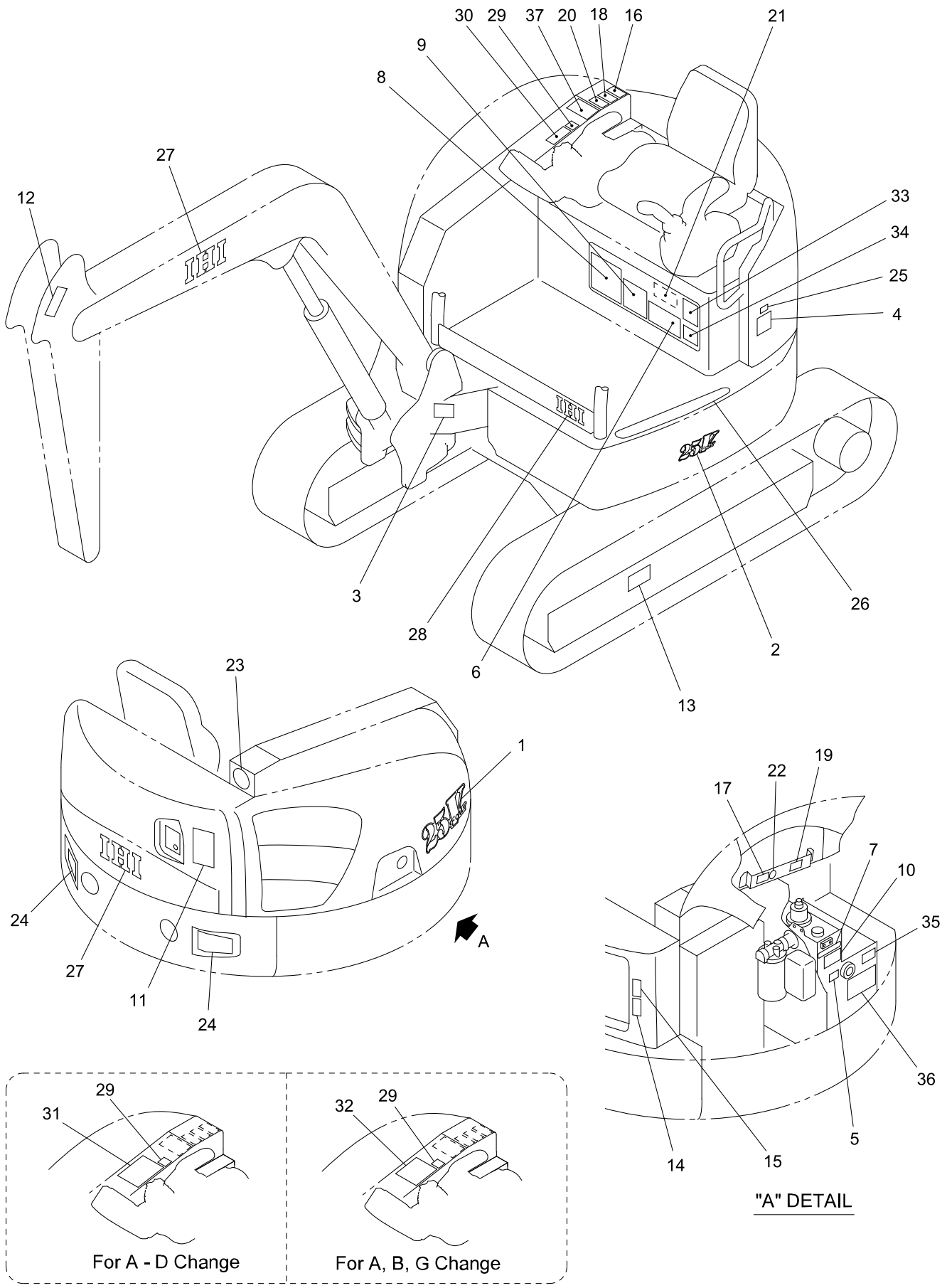

25V4-080700-1

https://truckmanualshub.com/

KEY No.	SUP.	PART No.	DESCRIPTION	Q'TY	CHAN.	SERIAL No.	REMARKS
0	×	F377 839 00	Decal Ass'y	1		WQ010001-	
0-1	×	F377 854 00	Decal Ass'y	1		WQ010001-	
0-2	×	F377 856 00	Decal Ass'y	1		WQ010001-	
1		D408 404 00	* Decal (Model)	1		WQ010001-	
2		D408 413 00	* Decal (Model)	1		WQ010001-	
3	×	D405 094 00	* Decal (Serial No.)	1		WQ010001-	
3-1		0497 035 00	* Screw, Drive	4		WQ010001-	d=3
4		D408 324 00	* Decal (Oil)	1		WQ010001-	
5		D406 490 00	* Decal (Oil Check)	1		WQ010001-	
6		D408 313 00	* Decal (Lub. Chart)	1		WQ010001-	
7		4447 479 00	* Decal (Oil)	1		WQ010001-	
8		D407 873 00	* Decal (Engine Daily Check)	1		WQ010001-	
9		D406 597 00	* Decal (Safety Works)	1		WQ010001-	
10		D408 328 00	* Decal (Tank Decompression)	1		WQ010001-	
11		D405 450 00	* Decal (Safety Swing)	1		WQ010001-	
12		D405 454 00	* Decal (Caution)	2		WQ010001-* * *	
12		D405 667 00	* Decal (Caution)	2	○	* * *-	
13		D405 455 00	* Decal (Caution)	2		WQ010001-	
14		D405 424 00	* Decal (Caution)	1		WQ010001-	
15		D405 452 00	* Decal (Caution)	1		WQ010001-	
16		D405 332 00	* Decal (Caution)	1		WQ010001-	
17		D405 462 00	* Decal (Caution)	1		WQ010001-	
18		D405 451 00	* Decal (Caution)	1		WQ010001-	
19		D405 463 00	* Decal (Caution)	1		WQ010001-	
20		D405 449 00	* Decal (Caution)	1		WQ010001-	
21		D405 373 00	* Decal (Caution)	1		WQ010001-	
22		4407 035 00	* Decal (Anti-Freezing Solution)	1		WQ010001-* * *	
22		D408 653 00	* Decal (Anti-Freezing Solution)	1	○	* * *-	
23		D406 631 00	* Decal (Environment)	1		WQ010001-	
24		D408 371 00	* Decal (Reflector)	2		WQ010001-	
25		D407 943 00	* Decal (EPA Regulation)	1		WQ010001-	
26		D408 370 00	* Plate, Nonslip	1		WQ010001-	
27		D408 402 00	* Decal (IHI)	3		WQ010001-	
28		D408 403 00	* Decal (IHI)	1		WQ010001-	
29		D406 602 00	* Decal (Blade, Pedal)	1		WQ010001-	
30		D406 603 00	* Decal (Control A)	1		WQ010001-	
30-1		D406 604 00	* Decal (Control B)	1		WQ010001-	
30-2		D406 605 00	* Decal (Control C)	1		WQ010001-	
30-3		D406 606 00	* Decal (Control D)	1		WQ010001-	
30-4		D406 608 00	* Decal (Control G)	1		WQ010001-	
31		D406 609 00	* Decal (Control A-D)	1		WQ010001-	
32		D406 610 00	* Decal (Control A, B, G)	1		WQ010001-	
● 33		D408 314 00	* Decal (Specification)	1		WQ010001-WQ020000	
● 33		D408 738 00	* Decal (Specification)	1		WQ020001-	
34		D408 224 00	* Decal (Bucket Specification)	1		WQ010001-	
35		4447 874 00	* Decal (Spare Piping Change)	1		WQ010001-	
36		4447 653 00	* Decal (Breaker Cation)	1		WQ010001-	
37		D408 354 00	* Decal (Spare Pedal)	1		WQ010001-	

8

https://truckmanualshub.com/

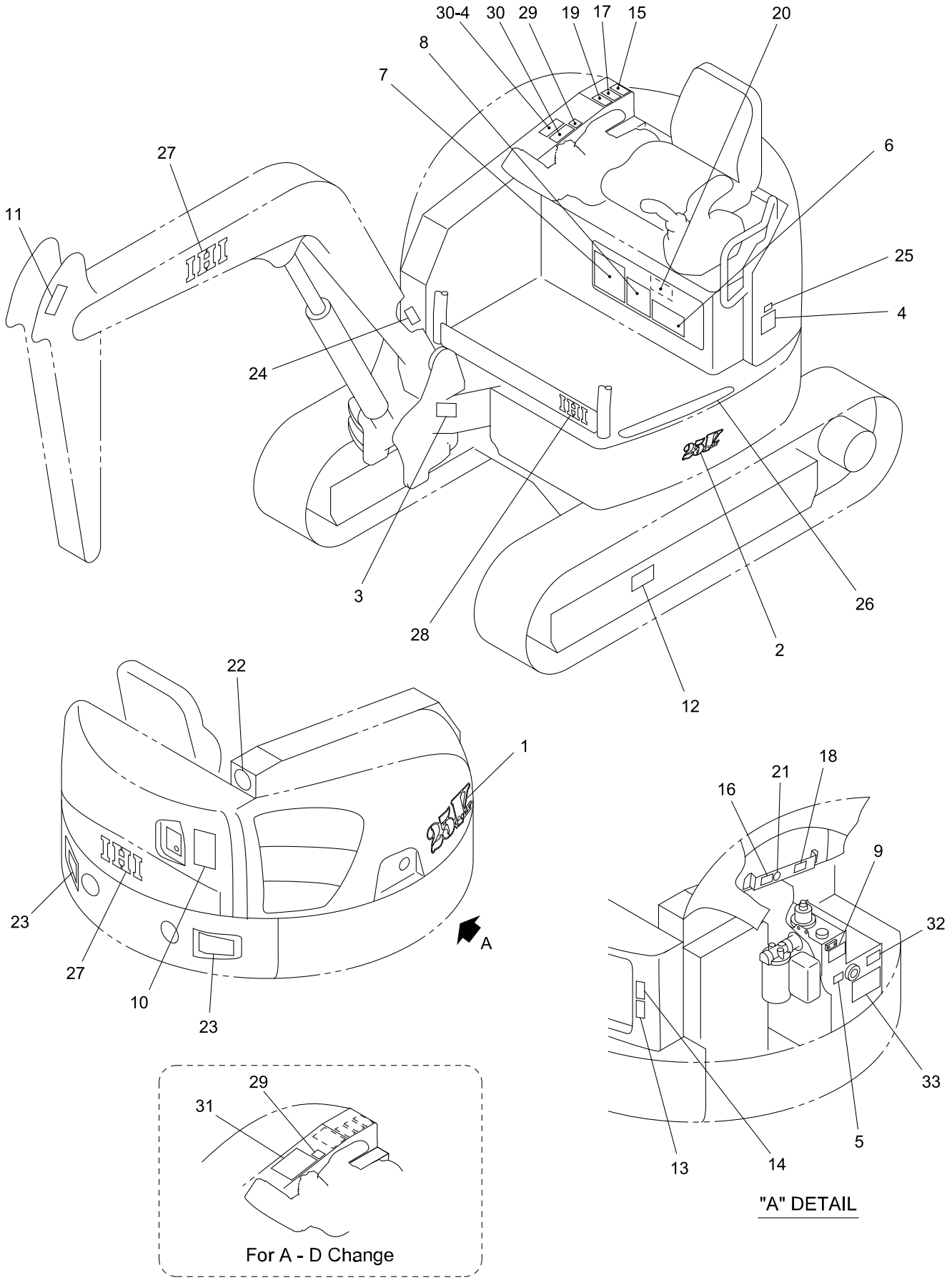

25V4-08070A-1

8

IHI

NAME PLATE ASS'Y (FOR ENGLISH)

MODEL 25V4

SHEET No 8-7[A]

https://truckmanualshub.com/

KEY No.	SUP.	PART No.	DESCRIPTION	Q'TY	CHAN.	SERIAL No.	REMARKS
0	×	F377 839 00	Decal Ass'y	1		WQ010001-	
0-1	×	F377 854 00	Decal Ass'y	1		WQ010001-	
1		D408 410 00	* Decal (Model)	1		WQ010001-	
2		D408 419 00	* Decal (Model)	1		WQ010001-	
3	×	D405 094 00	* Decal (Serial No.)	1		WQ010001-	
3-1		0497 035 00	* Screw, Drive	4		WQ010001-	d=3
4		4407 974 00	* Decal (Oil)	1		WQ010001-	
5		D406 504 00	* Decal (Oil Check)	1		WQ010001-	
6		D408 355 00	* Decal (Lub. Chart)	1		WQ010001-	
7		D407 886 00	* Decal (Engine Daily Check)	1		WQ010001-	
8		4406 458 00	* Decal (Safety Works)	1		WQ010001-	
9		D408 424 00	* Decal (Tank Decompression)	1		WQ010001-	
10		D405 507 00	* Decal (Safety Swing)	1		WQ010001-	
● 11		D405 511 00	* Decal (Caution)	2		WQ010001-* * *	
● 11		D405 668 00	* Decal (Caution)	2	○	* * *-	
12		D405 505 00	* Decal (Caution)	2		WQ010001-	
13		D405 366 00	* Decal (Caution)	1		WQ010001-	
14		D405 509 00	* Decal (Caution)	1		WQ010001-	
15		D405 359 00	* Decal (Caution)	1		WQ010001-	
16		D405 503 00	* Decal (Caution)	1		WQ010001-	
17		D405 508 00	* Decal (Caution)	1		WQ010001-	
18		D405 504 00	* Decal (Caution)	1		WQ010001-	
19		D405 506 00	* Decal (Caution)	1		WQ010001-	
20		D405 323 00	* Decal (Caution)	1		WQ010001-	
● 21		4407 035 00	* Decal (Anti-Freezing Solution)	1		WQ010001-* * *	
● 21		D408 653 00	* Decal (Anti-Freezing Solution)	1	○	* * *-	
22		D406 783 00	* Decal (Environment)	1		WQ010001-	
23		D408 371 00	* Decal (Reflector)	2		WQ010001-	
24	×	D405 097 00	* Decal (New Machine)	1		WQ010001-	
25		D407 943 00	* Decal (EPA Regulation)	1		WQ010001-	
26		D408 370 00	* Plate, Nonslip	1		WQ010001-	
27		D408 402 00	* Decal (IHI)	3		WQ010001-	
28		D408 403 00	* Decal (IHI)	1		WQ010001-	
29		D406 602 00	* Decal (Blade, Pedal)	1		WQ010001-	
30		D406 603 00	* Decal (Control A)	1		WQ010001-	
30-1		D406 604 00	* Decal (Control B)	1		WQ010001-	
30-2		D406 605 00	* Decal (Control C)	1		WQ010001-	
30-3		D406 606 00	* Decal (Control D)	1		WQ010001-	
30-4		D406 607 00	* Decal (Control F)	1		WQ010001-	
31		D406 609 00	* Decal (Control A-D)	1		WQ010001-	
32		4448 651 00	* Decal (Spare Piping Change)	1		WQ010001-	
33		4447 857 00	* Decal (Breaker Cation)	1		WQ010001-	

https://truckmanualshub.com/

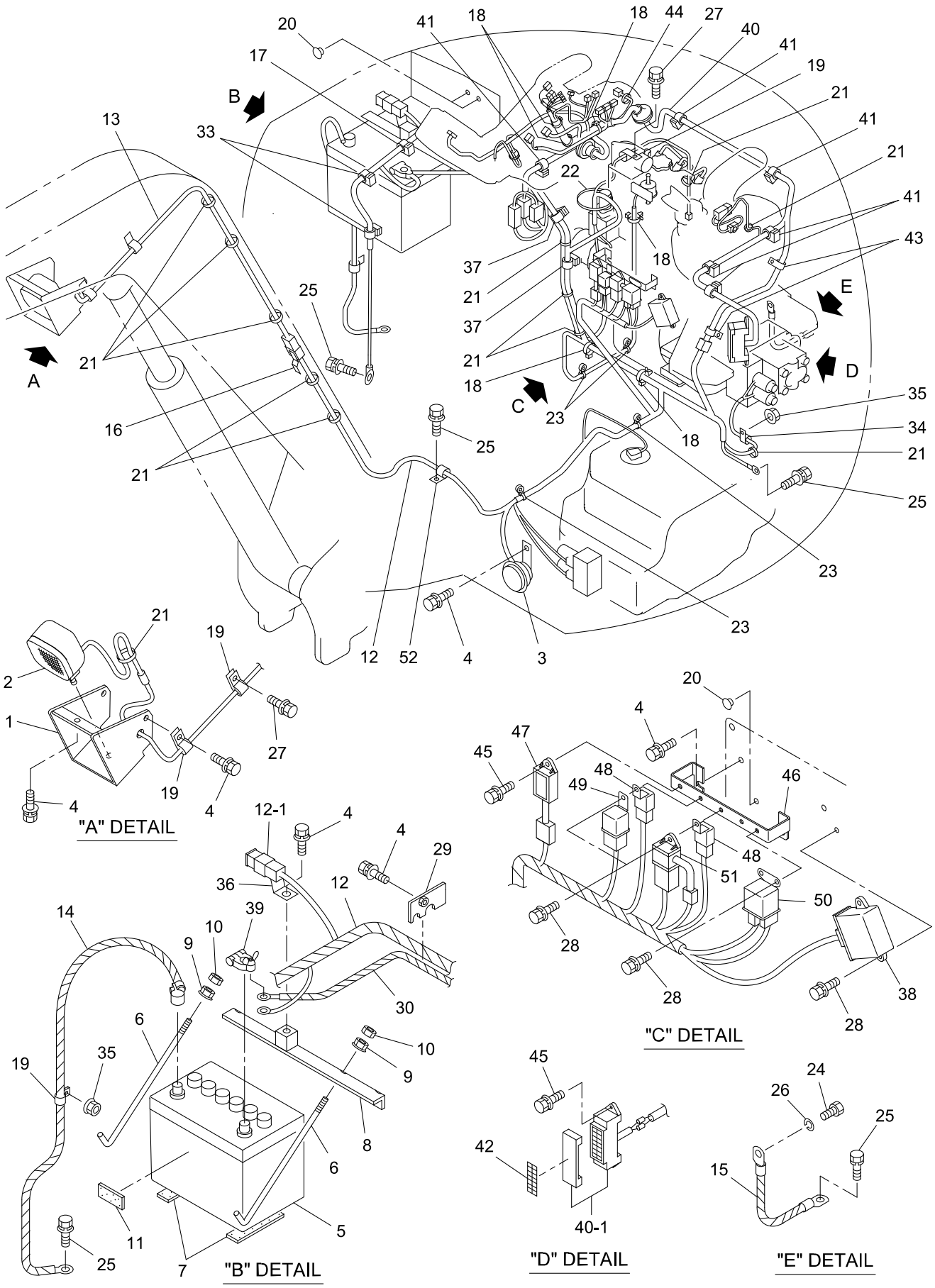

25V4-090100-1

https://truckmanualshub.com/

KEY No.	SUP.	PART No.	DESCRIPTION	Q'TY	CHAN.	SERIAL No.	REMARKS
0	×	F366 945 00	Electrical System	1		WQ010001-WQ020000	
0-1	×	F355 103 00	Accessories Ass'y	1		WQ010001-	
0-2	×	F366 887 00	Battery Ass'y	1		WQ010001-	
1		D458 270 00	* Cover	1		WQ010001-	
2		0854 529 UA	* Light Ass'y	1		WQ010001-	
2-1		0854 529 05	** Bulb	1		WQ010001-	
2-2		0854 529 01	** Lens	1		WQ010001-	
2-3		0552 080 20	** Bolt, Hex.	1		WQ010001-	M8X20
2-4		0521 080 00	** Nut, Hex.(W/F.W)	1		WQ010001-	M8
3		0861 001 02	* Horn	1		WQ010001-	
4		0517 080 16	* Bolt, Treatment (W/L.W, F.W)	8		WQ010001-	M8X16
5		0851 000 04	* Battery	1		WQ010001-	
5-1		0851 000 01	* Battery (For Cold District)	1		WQ010001-	
6		4004 022 17	* Bolt, Hook	2		WQ010001-	M6X270
7		4409 625 09	* Plate, Rubber	2		WQ010001-	
8		D419 288 00	* Bracket	1		WQ010001-	
9		0521 060 00	* Nut, Hex. (W/F.W)	2		WQ010001-	M6
10		0544 060 00	* Nut, Hex.	2		WQ010001-	M6
11		4409 625 10	* Plate, Rubber	1		WQ010001-	
12		D592 286 00	* Harness, Main	1		WQ010001-	
12-1		0830 291 01	** Link, Fusible	1		WQ010001-	65A
13		0879 551 64	* Harness	1		WQ010001-	
14		D592 194 03	* Harness	1		WQ010001-	
15		D592 195 01	* Harness	1		WQ010001-	
16		0690 081 92	* Clamp	1		WQ010001-	
17		0690 082 03	* Clamp, Hose	1		WQ010001-	d=13
18		0690 082 08	* Clamp, Hose	7		WQ010001-	
19		4080 000 03	* Clamp, Hose	8		WQ010001-	d=12.5
20		0690 201 05	* Plug	3		WQ010001-	M8
21		0820 067 03	* Band, Cable	11		WQ010001-	
22		0820 067 05	* Band, Cable	2		WQ010001-	
23		0820 067 31	* Band, Cable	4		WQ010001-	
24		0541 120 16	* Bolt, Hex.	1		WQ010001-	M12X16 P=1.25
25		0518 100 16	* Bolt, Treatment (W/L.W, F.W)	5		WQ010001-	M10X16 P=1.25
26		0590 120 00	* Washer, Lock	1		WQ010001-	M12
27		0517 080 12	* Bolt, Treatment (W/L.W, F.W)	4		WQ010001-	M8X12
28		0517 060 16	* Bolt, Treatment (W/L.W, F.W)	6		WQ010001-	M6X16
29		D419 446 00	* Bracket	1		WQ010001-	
30		4591 982 11	* Cable, Battery	1		WQ010001-	L=1300
33		0690 082 02	* Clamp	2		WQ010001-	
● 34		4080 000 24	* Clamp, Hose	1		WQ010001-	d=15
35		0524 100 00	* Nut, Hex. (W/F.W)	2		WQ010001-	M10 P=1.25
36		0690 081 89	* Clip	1		WQ010001-	
37		0690 082 06	* Clamp	2		WQ010001-	
38		0820 215 10	* Relay, Flip-Flop	1		WQ010001-	
39		0852 119 22	* Terminal	1		WQ010001-	
40		D592 432 00	* Harness	1		WQ010001-	
40-1		0858 140 01	** Box, Fuse	1		WQ010001-	
40-2		0830 107 10	** Fuse	2		WQ010001-	30A
40-3		0830 107 09	** Fuse	1		WQ010001-	25A
40-4		0830 107 08	** Fuse	2		WQ010001-	20A
40-5		0830 107 07	** Fuse	1		WQ010001-	15A

https://truckmanualshub.com/

KEY No.	SUP.	PART No.	DESCRIPTION	Q'TY	CHAN.	SERIAL No.	REMARKS
40-6		0830 107 06	** Fuse	8		WQ010001-	10A
40-7		0830 107 12	** Fuse	1		WQ010001-	5A
40-8		0830 107 11	** Fuse	1		WQ010001-	2A
41		0690 082 05	* Clamp, Hose	6		WQ010001-	d=19
42		D408 292 00	* Decal	1		WQ010001-	
43		4080 000 06	* Clamp, Hose	2		WQ010001-	d=27
44		0820 067 04	* Band, Cable	1		WQ010001-	
45		0517 060 20	* Bolt, Treatment (W/L.W, F.W)	3		WQ010001-	M6X20
46		D419 315 00	* Bracket	1		WQ010001-	
47		E3858 71610	* Timer Relay, Glow Plug	1		WQ010001-	
48		0820 215 07	* Relay	2		WQ010001-	
49		E1852 06480	* Relay, Starter	1		WQ010001-	IHI-SHIBAURA
50		E1852 06410	* Relay, Glow	1		WQ010001-	IHI-SHIBAURA
51		E1853 56010	* Unit, Safety	1		WQ010001-	IHI-SHIBAURA
52		4080 000 08	* Clamp, Hose	1		WQ010001-	

9

https://truckmanualshub.com/

[Memo]

https://truckmanualshub.com/

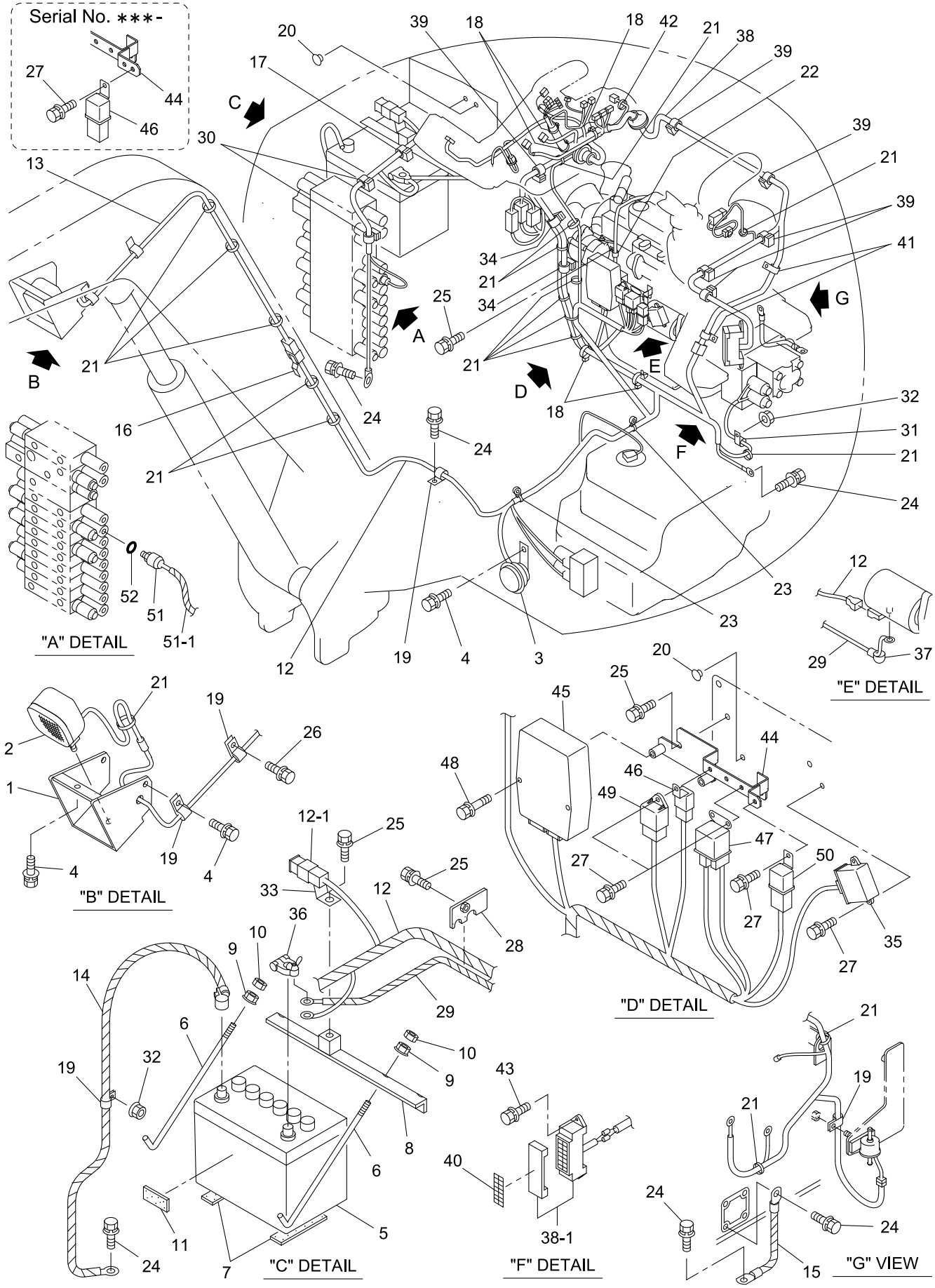

25V4-09010A-1

https://truckmanualshub.com/

KEY No.	SUP.	PART No.	DESCRIPTION	Q'TY	CHAN.	SERIAL No.	REMARKS
0	×	F366 949 00	Electrical System	1		WQ020001-	
0-1	×	F355 103 00	Accessories Ass'y	1		WQ020001-	
0-2	×	F366 887 00	Battery Ass'y	1		WQ020001-	
1		D458 270 00	* Cover	1		WQ020001-	
2		0854 529 UA	* Light Ass'y	1		WQ020001-	
2-1		0854 529 05	** Bulb	1		WQ020001-	
2-2		0854 529 01	** Lens	1		WQ020001-	
2-3		0552 080 20	** Bolt, Hex.	1		WQ020001-	M8X20
2-4		0521 080 00	** Nut, Hex.(W/F.W)	1		WQ020001-	M8
3		0861 001 02	* Horn	1		WQ020001-	
4		0517 080 16	* Bolt, Treatment (W/L.W, F.W)	4		WQ020001-	M8X16
5		0851 000 04	* Battery	1		WQ020001-	
5-1		0851 000 01	* Battery (For Cold District)	1		WQ020001-	
6		4004 022 17	* Bolt, Hook	2		WQ020001-	M6 L=270
7		4409 625 09	* Plate, Rubber	2		WQ020001-	
8		D419 288 00	* Bracket	1		WQ020001-	
9		0521 060 00	* Nut, Hex. (W/F.W)	2		WQ020001-	M6
10		0544 060 00	* Nut, Hex.	2		WQ020001-	M6
11		4409 625 10	* Plate, Rubber	1		WQ020001-	
12		D592 409 00	* Harness, Main	1		WQ020001-	
12-1		0830 291 01	** Link, Fusible	1		WQ020001-	65A
13		0879 551 64	* Harness	1		WQ020001-	
14		D592 194 03	* Cable, Battery	1		WQ020001-	
15		D592 195 01	* Band, Earth	1		WQ020001-	
16		0690 081 92	* Clamp	1		WQ020001-	
17		0690 082 03	* Clamp, Hose	1		WQ020001-	d=13
18		0690 082 08	* Clamp, Hose	6		WQ020001-	
19		4080 000 03	* Clamp, Hose	5		WQ020001-	d=12.5
20		0690 201 05	* Plug	3		WQ020001-	
21		0820 067 03	* Band, Cable	18		WQ020001-	
22		4080 000 04	* Clamp, Hose	1		WQ020001-	d=12.5
23		0820 067 31	* Band, Cable	2		WQ020001-	
24		0518 100 16	* Bolt, Treatment (W/L.W, F.W)	6		WQ020001-	M10X16 P=1.25
25		0517 080 16	* Bolt, Treatment (W/L.W, F.W)	5		WQ020001-	M8X16
26		0517 080 12	* Bolt, Treatment (W/L.W, F.W)	1		WQ020001-	M8X12
● 27		0517 060 16	* Bolt, Treatment (W/L.W, F.W)	7		WQ020001-	M6X16
28		D419 446 00	* Bracket	1		WQ020001-	
29		4591 982 11	* Cable, Battery	1		WQ020001-	L=1300
30		0690 082 02	* Clamp, Hose	2		WQ020001-	
● 31		4080 000 24	* Clamp, Hose	1		WQ020001-	d=15
32		0524 100 00	* Nut, Hex. (W/F.W)	2		WQ020001-	M10 P=1.25
33		0690 081 89	* Clip	1		WQ020001-	
34		0690 082 06	* Clamp, Hose	2		WQ020001-	
35		0820 215 10	* Relay, Flip-Flop	1		WQ020001-	
36		0852 119 22	* Terminal	1		WQ020001-	
37		D528 004 00	* Cap	1		WQ020001-	
38		D592 432 00	* Harness	1		WQ020001-	
38-1		0858 140 01	** Box, Fuse	1		WQ020001-	
38-2		0830 107 10	** Fuse	2		WQ020001-	30A
38-3		0830 107 09	** Fuse	1		WQ020001-	25A
38-4		0830 107 08	** Fuse	2		WQ020001-	20A
38-5		0830 107 07	** Fuse	1		WQ020001-	15A

https://truckmanualshub.com/

KEY No.	SUP.	PART No.	DESCRIPTION	Q'TY	CHAN.	SERIAL No.	REMARKS
38-6		0830 107 06	** Fuse	8		WQ020001-	10A
38-7		0830 107 12	** Fuse	1		WQ020001-	5A
38-8		0830 107 11	** Fuse	1		WQ020001-	2A
39		0690 082 05	* Clamp, Hose	6		WQ020001-	d=19
40		D408 292 00	* Decal	1		WQ020001-	
● 41		4080 000 06	* Clamp, Hose	2		WQ020001-	d=27
42		0820 067 04	* Band, Cable	1		WQ020001-	
43		0517 060 20	* Bolt, Treatment (W/L.W, F.W)	2		WQ020001-	M6X20
● 44		D419 519 00	* Bracket	1		WQ020001-* * *	
● 44		D419 815 00	* Bracket	1	○	* * *-	
45		0891 922 UA	* Controller, Throttle	1		WQ020001-	
46		0820 215 07	* Relay	1		WQ020001-	
47		0820 215 11	* Relay, Glow	1		WQ020001-	
● 48		0517 060 50	* Bolt, Treatment (W/L.W, F.W)	2		WQ020001-	M6X50
49		K15694 65992	* Timer Relay, Glow	1		WQ020001-	
50		K1K574 60221	* Relay, Starter	1		WQ020001-	
51		0858 501 16	* Switch, Oil Pressure	1		WQ020001-	
51-1		0820 803 01	* Tube, Corrugate	M		WQ020001-	L=300
52		0760 710 12	* Ring, O	1		WQ020001-	P11-90B

9

https://truckmanualshub.com/

[Memo]

https://truckmanualshub.com/

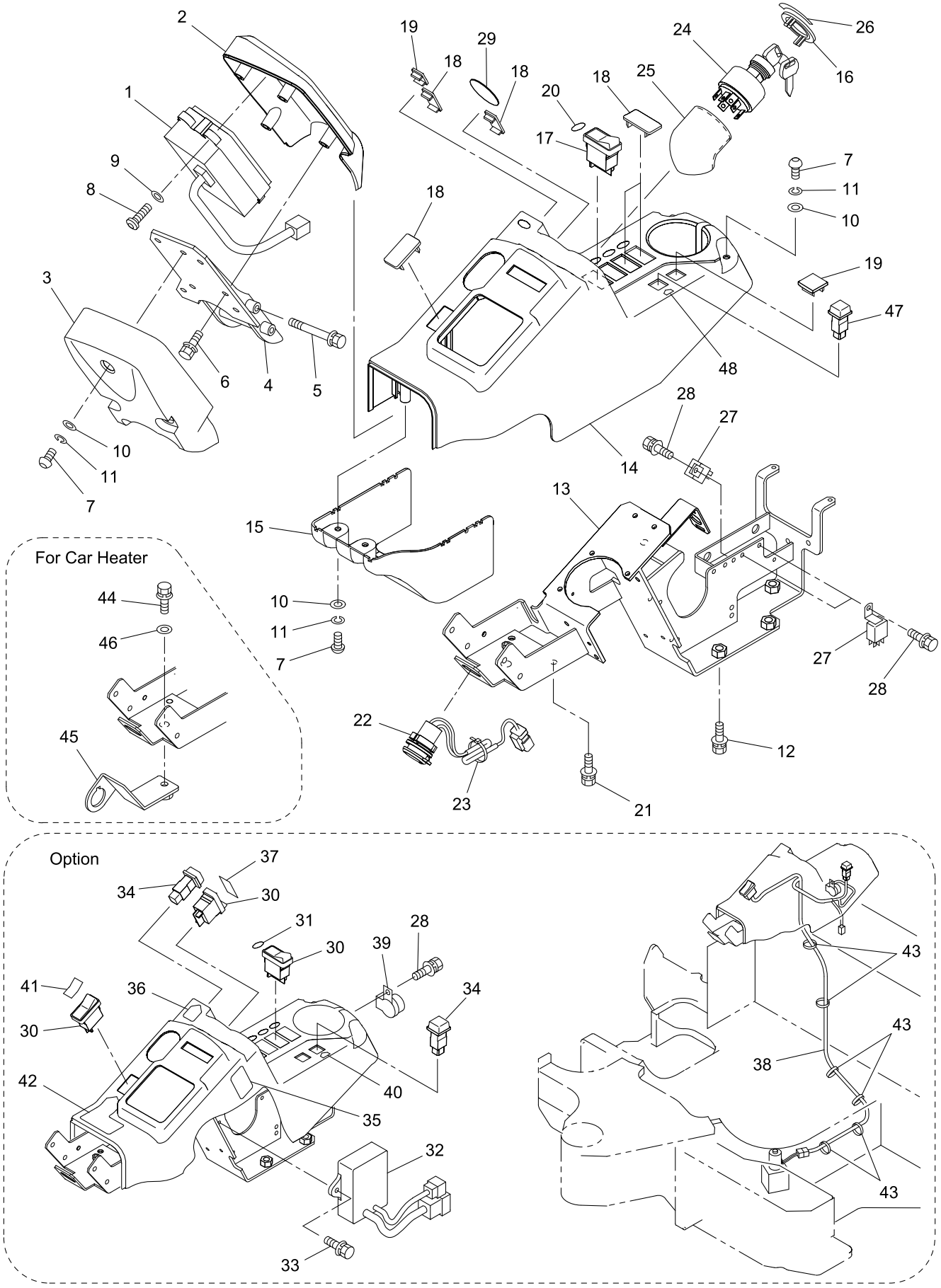

25V4-090200-1

https://truckmanualshub.com/

KEY No.	SUP.	PART No.	DESCRIPTION	Q'TY	CHAN.	SERIAL No.	REMARKS
0	×	F361 706 00	Panel Ass'y, Instrument	1		WQ010001-	
● 0-1	×	F361 758 00	Panel Ass'y, Instrument	1		WQ010001-＊＊＊	
● 0-1	×	F361 791 00	Panel Ass'y, Instrument	1		＊＊＊-	
1		0881 509 UA	＊ Monitor, OK	1		WQ010001-	
2		D465 380 00	＊ Panel	1		WQ010001-	
3		D465 381 00	＊ Panel	1		WQ010001-	
4		D419 230 00	＊ Bracket	1		WQ010001-＊＊＊	
4		D419 580 00	＊ Bracket	1	○	＊＊＊-	
5		0517 081 15	＊ Bolt, Treatment (W/L.W, F.W)	2		WQ010001-	M8X115
6		0517 060 20	＊ Bolt, Treatment (W/L.W, F.W)	4		WQ010001-	M6X20
7		4004 364 01	＊ Bolt, Button Head	7		WQ010001-	M6X18
8		0454 400 20	＊ Screw, Tapping	4		WQ010001-	M4X20
9		0593 040 00	＊ Washer, Flat	4		WQ010001-	M4
10		0594 060 00	＊ Washer, Flat	7		WQ010001-	M6
11		0596 060 00	＊ Washer, Lock	7		WQ010001-	M6
12		0518 100 25	＊ Bolt, Treatment (W/L.W, F.W)	4		WQ010001-	M10X25 P=1.25
13		D419 229 00	＊ Bracket	1		WQ010001-＊＊＊	
13		D419 672 00	＊ Bracket	1	○	＊＊＊-	
14		D465 313 00	＊ Panel	1		WQ010001-	
15		D465 314 00	＊ Panel	1		WQ010001-	
16		0690 203 44	＊ Cover	1		WQ010001-	
17		0858 314 33	＊ Switch Assy	1		WQ010001-	
18		D528 005 00	＊ Cap	AR		WQ010001-	
19		D528 006 00	＊ Cap	AR		WQ010001-	
20		D407 819 00	＊ Decal (Light)	1		WQ010001-	
21		0517 060 16	＊ Bolt, Treatment (W/L.W, F.W)	2		WQ010001-	M6X16
22		0830 406 02	＊ Socket	1		WQ010001-	
23		0820 067 05	＊ Band, Cable	1		WQ010001-	
24		0858 306 03	＊ Switch Assy Starter	1		WQ010001-	
24-1		0858 306 04	＊ Switch Assy Starter	1		WQ010001-	Option 5080
24-2		0690 270 29	＊＊ Key	2		WQ010001-	#5080
25		4457 535 00	＊ Cover (Starter Switch)	1		WQ010001-	
26		D407 823 00	＊ Decal	1		WQ010001-	
27		0820 215 07	＊ Relay	3		WQ010001-	
28		0517 060 12	＊ Bolt, Treatment (W/L.W, F.W)	4		WQ010001-	M6X12
29		D407 822 00	＊ Decal (IHI)	1		WQ010001-	
30		0858 314 33	＊ Switch Assy	AR		WQ010001-	
31		D407 965 00	＊ Decal	1		WQ010001-	
32		0893 509 UA	＊ Controller Ass'y	1		WQ010001-	
33		0517 060 20	＊ Bolt, Treatment (W/L.W, F.W)	2		WQ010001-	M6X20
34		0858 314 35	＊ Switch Assy	AR		WQ010001-	
35		D408 285 00	＊ Decal	1		WQ010001-	
36		D407 963 00	＊ Decal	1		WQ010001-	
37		D407 964 00	＊ Decal	1		WQ010001-	
38		D592 206 00	＊ Harness	1		WQ010001-	
39		0857 011 57	＊ Buzzer	1		WQ010001-	
40		D407 966 00	＊ Decal	1		WQ010001-	
41		D407 967 00	＊ Decal	1		WQ010001-	
42		D407 968 00	＊ Decal	1		WQ010001-	
43		0820 067 09	＊ Band, Cable	6		WQ010001-	
44		0518 100 20	＊ Bolt, Treatment (W/L.W, F.W)	1		WQ010001-	M10X20 P=1.25
45		D419 477 00	＊ Bracket	1		WQ010001-	

https://truckmanualshub.com/

KEY No.	SUP.	PART No.	DESCRIPTION	Q'TY	CHAN.	SERIAL No.	REMARKS
46		4006 119 02	* Washer	1		WQ010001-	M10
● 47		0858 314 02	* Switch Assy	1		* * *-	
● 48		D408 643 00	* Decal	1		* * *-	

9

https://truckmanualshub.com/

[Memo]

https://truckmanualshub.com/

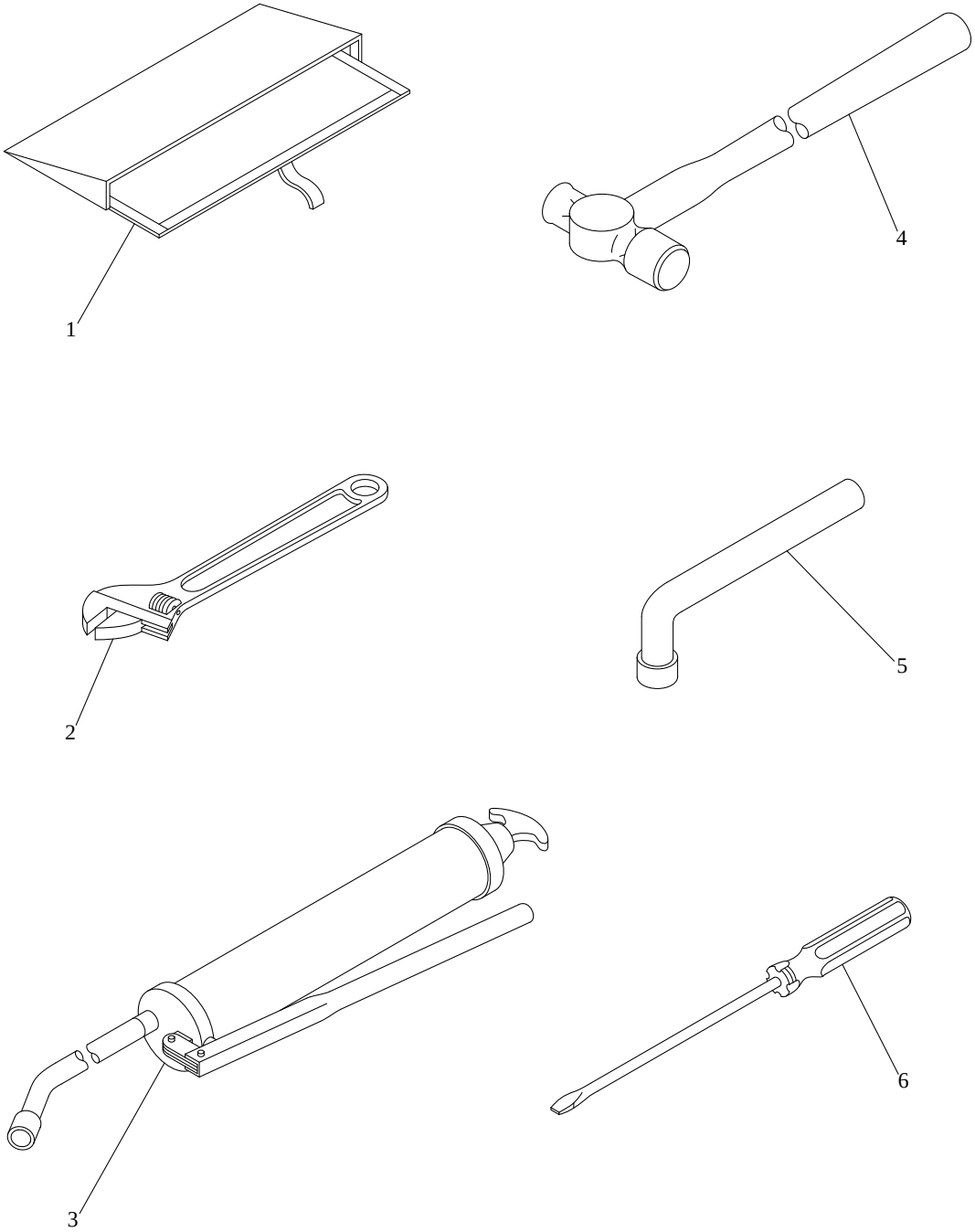

SHALL-100100-1

https://truckmanualshub.com/

KEY No.	SUP.	PART No.	DESCRIPTION	Q'TY	CHAN.	SERIAL No.	REMARKS
0	×	5388 510 00	Tools Set	1		WQ000001-	
1		4450 505 00	* Case, Tools	1		WQ000001-	
2	△	0931 109 25	* Wrench, Adjustable	1		WQ000001-	250mm
3		0931 370 11	* Gun, Grease	1		WQ000001-	
3-1		0931 370 10	* Gun, Grease	1		WQ000001-	For Export
3-2	☆	0931 371 01	** Hose, Grease	1		WQ000001-	48190-20540
4	△	0931 331 10	* Hammer	1		WQ000001-	
5	△	0931 070 24	* Wrench, L	1		WQ000001-	24mm
6	△	0931 301 04	* Driver (-)	1		WQ000001-	100mm

10

https://truckmanualshub.com/

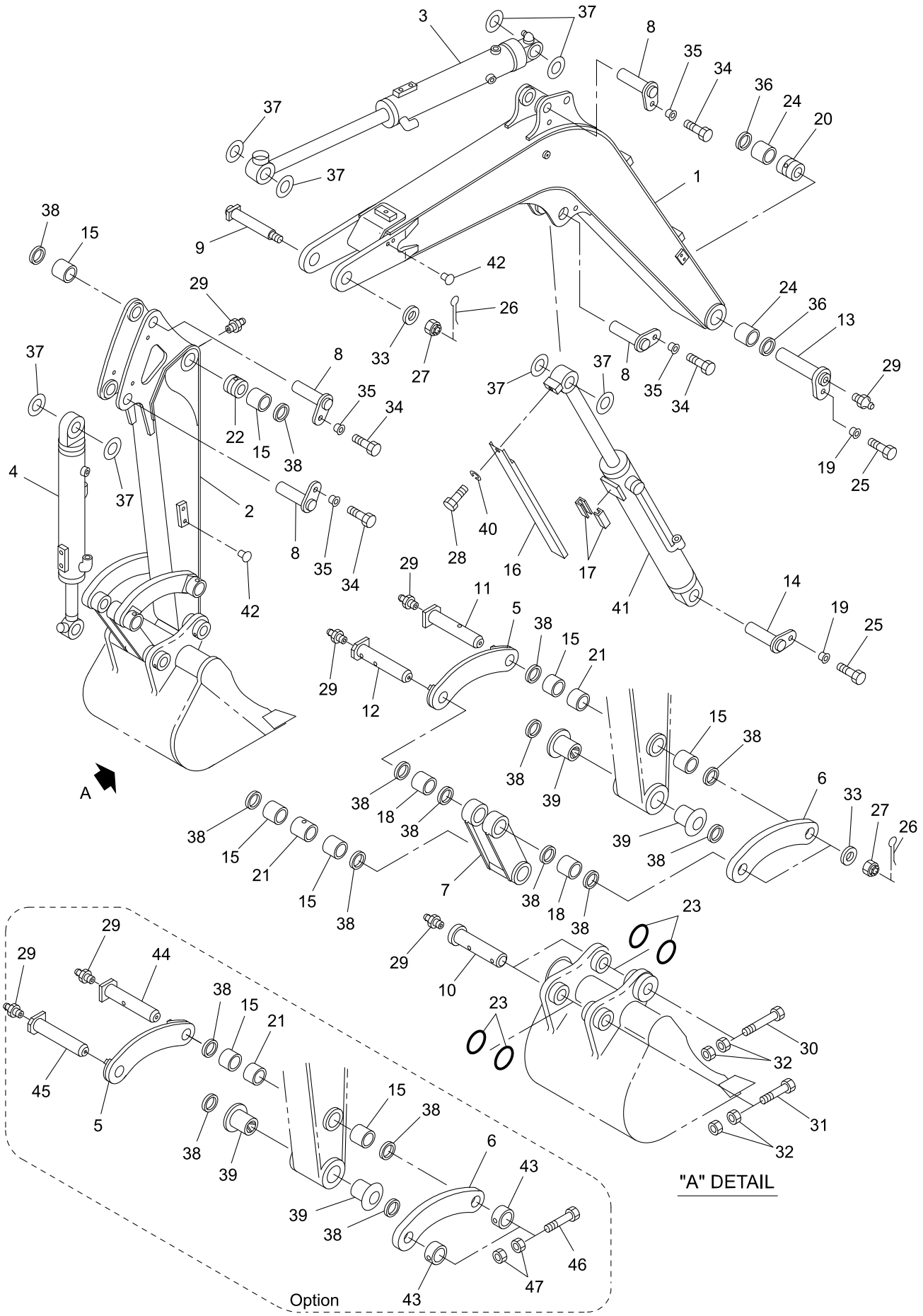

https://truckmanualshub.com/

KEY No.	SUP.	PART No.	DESCRIPTION	Q'TY	CHAN.	SERIAL No.	REMARKS
0	×	F388 418 00	Attachment Ass'y, Hoe	1		WQ010001-	
1		D210 142 00	* Boom	1		WQ010001-	
2		D215 221 00	* Arm Ass'y	1		WQ010001-	
2-1		D215 232 00	* Arm Ass'y, Long	1		WQ010001-	
3	#	0782 610 UA	* Cylinder Ass'y, Arm	1		WQ010001-	Sh. No. 5-9
4	#	0782 611 UA	* Cylinder Ass'y, Bucket	1		WQ010001-	Sh. No. 5-10
5		D490 299 00	* Link, Arm (R.H.)	1		WQ010001-	
6		D490 300 00	* Link, Arm (L.H.)	1		WQ010001-	
7		D490 298 00	* Link, Bucket	1		WQ010001-	
8		D017 236 01	* Pin	4		WQ010001-	
9		D013 377 01	* Pin, Head	1		WQ010001-	
10		D013 360 00	* Pin, Head	2		WQ010001-	
11		D013 354 00	* Pin, Head	1		WQ010001-	
12		D013 353 00	* Pin, Head	1		WQ010001-	
13		D017 271 01	* Pin	1		WQ010001-	
14		D017 233 04	* Pin	1		WQ010001-	
15		4043 229 09	* Bushing	6		WQ010001-	
16		D458 438 00	* Cover	1		WQ010001-	
17		D475 052 00	* Guide	2		WQ010001-	
18		4043 231 11	* Bushing	2		WQ010001-	
19		D047 058 00	* Bushing	2		WQ010001-	
20		4040 468 02	* Spacer	1		WQ010001-	
21		4040 468 13	* Spacer	2		WQ010001-	
22		D040 197 00	* Spacer	1		WQ010001-	
23		4511 501 07	* Ring, O	4		WQ010001-	
24		4043 229 01	* Bushing	2		WQ010001-	
25		0555 160 35	* Bolt, Treatment	2		WQ010001-	M16X35
26		0599 060 50	* Pin, Cotter	3		WQ010001-	d=6X50
27		0587 300 00	* Nut, Castle	3		WQ010001-	M30
28		0555 120 20	* Bolt, Treatment	1		WQ010001-	M12X20
29		0728 111 15	* Nipple, Grease	6		WQ010001-	PT1/8
30		0514 121 10	* Bolt, Treatment	1		WQ010001-	M12X110 P=1.25
31		0514 120 80	* Bolt, Treatment	1		WQ010001-	M12X80 P=1.25
32		0535 120 00	* Nut, Treatment	4		WQ010001-	M12 P=1.25
33		4006 557 00	* Washer	3		WQ010001-	
34		0555 120 25	* Bolt, Treatment	4		WQ010001-	M12X25
35		D047 059 00	* Bushing	4		WQ010001-	
36		0765 033 27	* Seal, Dust	2		WQ010001-	
37		4006 604 01	* Shim	AR		WQ010001-	d=35, t=1.0
37-1		4006 604 02	* Shim	AR		WQ010001-	d=35, t=2.0
38		0765 033 33	* Seal, Dust	12		WQ010001-	
39		D043 111 00	* Bushing	2		WQ010001-	
40		0590 120 00	* Washer, Lock	1		WQ010001-	M12
41	#	0782 612 UA	* Cylinder Ass'y, Boom	1		WQ010001-	Sh. No. 5-8
42		0910 911 00	* Plug	8		WQ010001-	
● 43		D042 078 00	* Collar	2		WQ010001-	
● 44		D013 482 00	* Pin, Head	1		WQ010001-	
● 45		D013 483 00	* Pin, Head	1		WQ010001-	
● 46		0514 120 80	* Bolt, Treatment	2		WQ010001-	M12X80 P=1.25
● 47		0535 120 00	* Nut, Treatment	4		WQ010001-	M12 P=1.25

https://truckmanualshub.com/

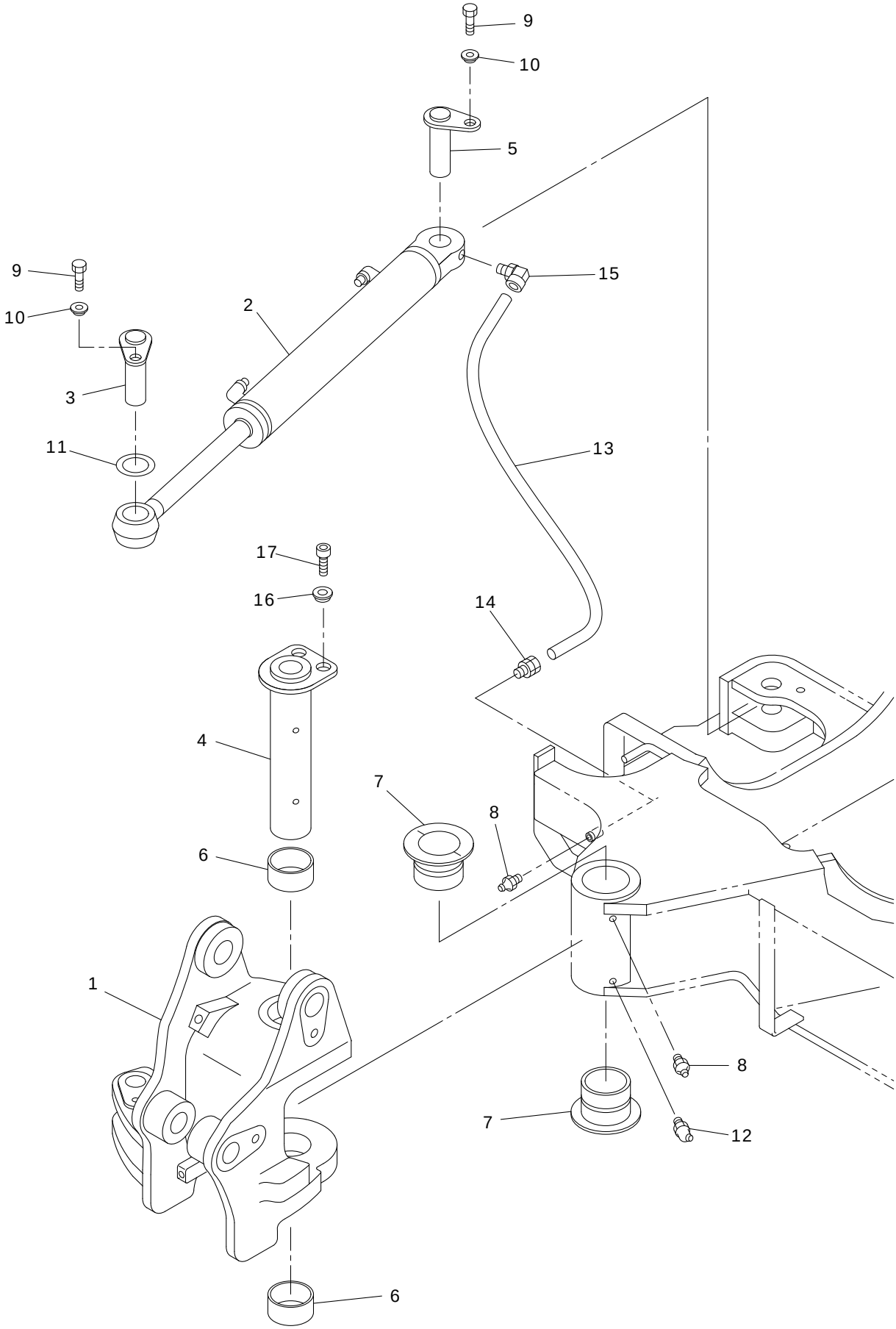

25V4-110200-1

https://truckmanualshub.com/

KEY No.	SUP.	PART No.	DESCRIPTION	Q'TY	CHAN.	SERIAL No.	REMARKS
0	×	F388 392 00	Swing Ass'y, Boom	1		WQ010001-	
1		D418 625 00	* Bracket, Boom Swing	1		WQ010001-	
2	#	0782 613 UA	* Cylinder Ass'y, Boom Swing	1		WQ010001-	Sh. No. 5-11
3		D017 236 01	* Pin	1		WQ010001-	
4		D017 258 00	* Pin	1		WQ010001-	
5		D017 236 03	* Pin	1		WQ010001-	
6		D043 099 00	* Bushing	2		WQ010001-	
7		D043 116 00	* Bushing	2		WQ010001-	
8		0728 111 15	* Nipple, Grease	2		WQ010001-	PT1/8
9		0555 120 30	* Bolt, Treatment	2		WQ010001-	M12X30
10		D047 059 00	* Bushing	2		WQ010001-	
11		4006 540 31	* Shim	AR		WQ010001-	t=1.0
11-1		4006 540 32	* Shim	AR		WQ010001-	t=2.0
12		0728 111 55	* Nipple, Grease	1		WQ010001-	PT1/8X67.5
13		0779 000 88	* Tube, Synflex	M		WQ010001-	L=800
14		0710 106 27	* Connector	1		WQ010001-	
14-1		0713 100 02	** Sleeve	1		WQ010001-	
15		0710 107 27	* Elbow	1		WQ010001-	
15-1		0713 100 02	** Sleeve	1		WQ010001-	
16		D047 002 00	* Bushing	2		WQ010001-	
17		0555 120 35	* Bolt, Treatment	2		WQ010001-	M12X35

https://truckmanualshub.com/

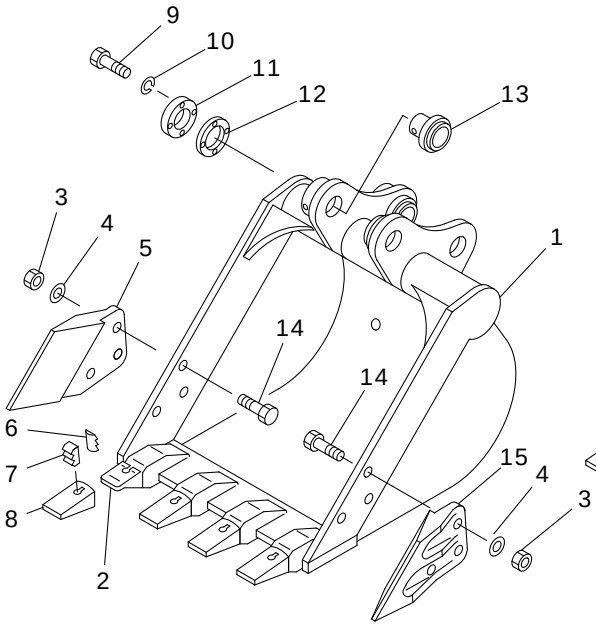

0.08M³(500mm)

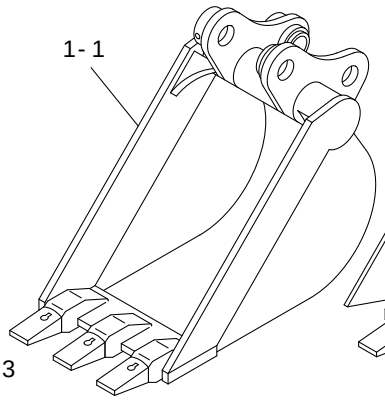

0.05M³(320mm)

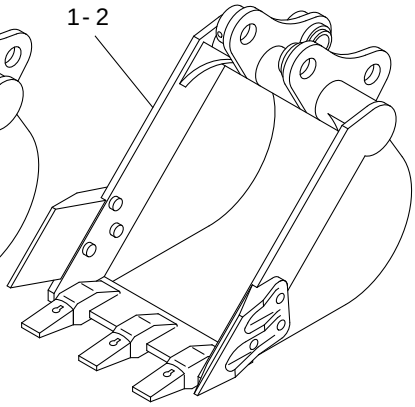

0.06M³(400mm)

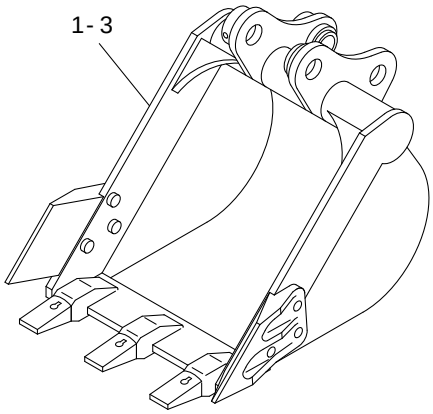

0.07M³(450mm)

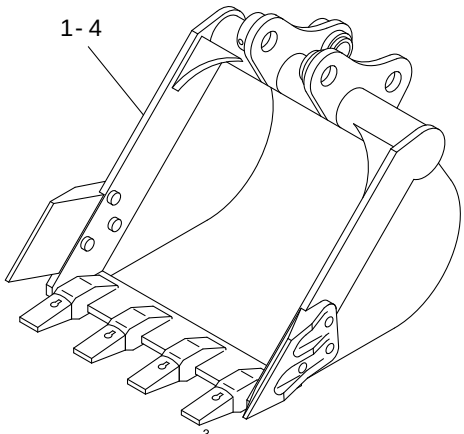

0.09M³(550mm)

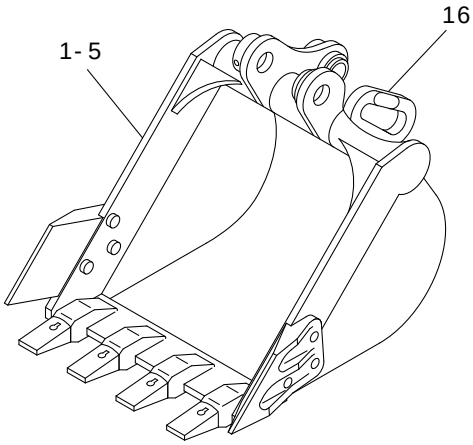

0.08M³(500mm)

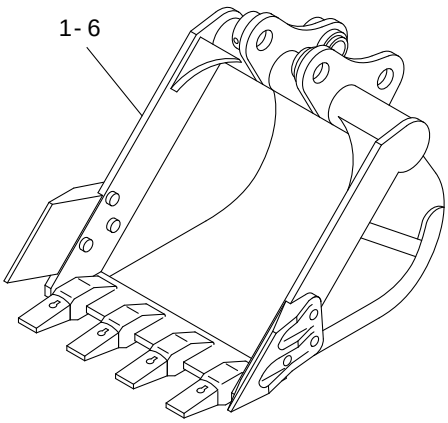

0.08M³(500mm)

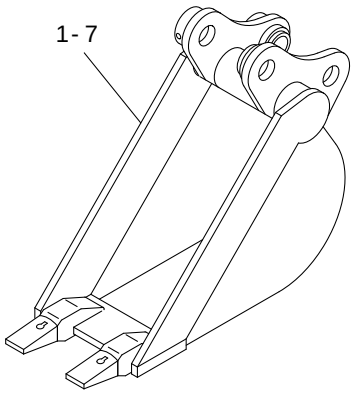

0.04M³(250mm)

25VX3-110300-1

https://truckmanualshub.com/

	KEY No.	SUP.	PART No.	DESCRIPTION	Q'TY	CHAN.	SERIAL No.	REMARKS
●	0		F388 220 01	Bucket Ass'y, Hoe (0.08m3)	1		WQ000001-	Std.
●	0-1		F388 221 01	Bucket Ass'y, Hoe (0.05m3)	1		WQ000001-	
●	0-2		F388 220 02	Bucket Ass'y, Hoe (0.06m3)	1		WQ000001-	
●	0-3		F388 220 03	Bucket Ass'y, Hoe (0.07m3)	1		WQ000001-	
●	0-4		F388 220 04	Bucket Ass'y, Hoe (0.09m3)	1		WQ000001-	
●	0-5		F388 222 02	Bucket Ass'y, Hoe (0.08m3 W/Hook)	1		WQ000001-	
●	0-6		F388 223 02	Bucket Ass'y, Hoe (Reinforced, 0.08m3)	1		WQ000001-	
●	0-7		F388 040 01	Bucket Ass'y, Hoe (0.04m3)	1		WQ000001-	
●	1	×	D270 120 00	* Bucket, Hoe (0.08m3, 500mm)	1		WQ000001-	Std.
●	1-1	×	D270 123 00	* Bucket, Hoe (0.05m3, 320mm)	1		WQ000001-	
●	1-2	×	D270 119 00	* Bucket, Hoe (0.06m3, 400mm)	1		WQ000001-	
●	1-3	×	D270 118 00	* Bucket, Hoe (0.07m3, 450mm)	1		WQ000001-	
●	1-4	×	D270 121 00	* Bucket, Hoe (0.09m3, 550mm)	1		WQ000001-	
●	1-5	×	D270 125 00	* Bucket, Hoe (0.08m3, 500mm)	1		WQ000001-	W/Hook
●	1-6	×	D270 127 00	* Bucket, Hoe (0.08m3, 500mm)	1		WQ000001-	強化, Reinforced
●	1-7	×	D270 016 00	* Bucket, Hoe (0.04m3, 250mm)	1		WQ000001-	
	2		0650 001 16	** Adapter, Tooth	AR		WQ000001-	
	3		0585 140 00	* Nut, Treatment	6		WQ000001-	M14
	4		D006 051 00	* Washer, Treatment	6		WQ000001-	M14
	5		4123 041 00	* Cutter, Side	1		WQ000001-	
	6		0650 004 02	* Pin, Rubber	AR		WQ000001-	18-20M-LK
	7		0650 003 03	* Pin, Lock	AR		WQ000001-	18-20M-PN
	8		0650 002 04	* Tooth	AR		WQ000001-	18S
	9		0513 100 30	* Bolt, Treatment	4		WQ000001-	M10X30
	10		0590 100 00	* Washer, Lock	4		WQ000001-	M10
	11		4435 634 00	* Flange	1		WQ000001-	
	12		4007 306 00	* Shim	AR		WQ000001-	
	13		4131 251 00	* Boss	1		WQ000001-	
	14		0555 140 40	* Bolt, Treatment	6		WQ000001-	M14X40
	15		4123 040 00	* Cutter, Side	1		WQ000001-	
	16		0652 755 UA	* Hook	1		WQ000001-	

11

https://truckmanualshub.com/

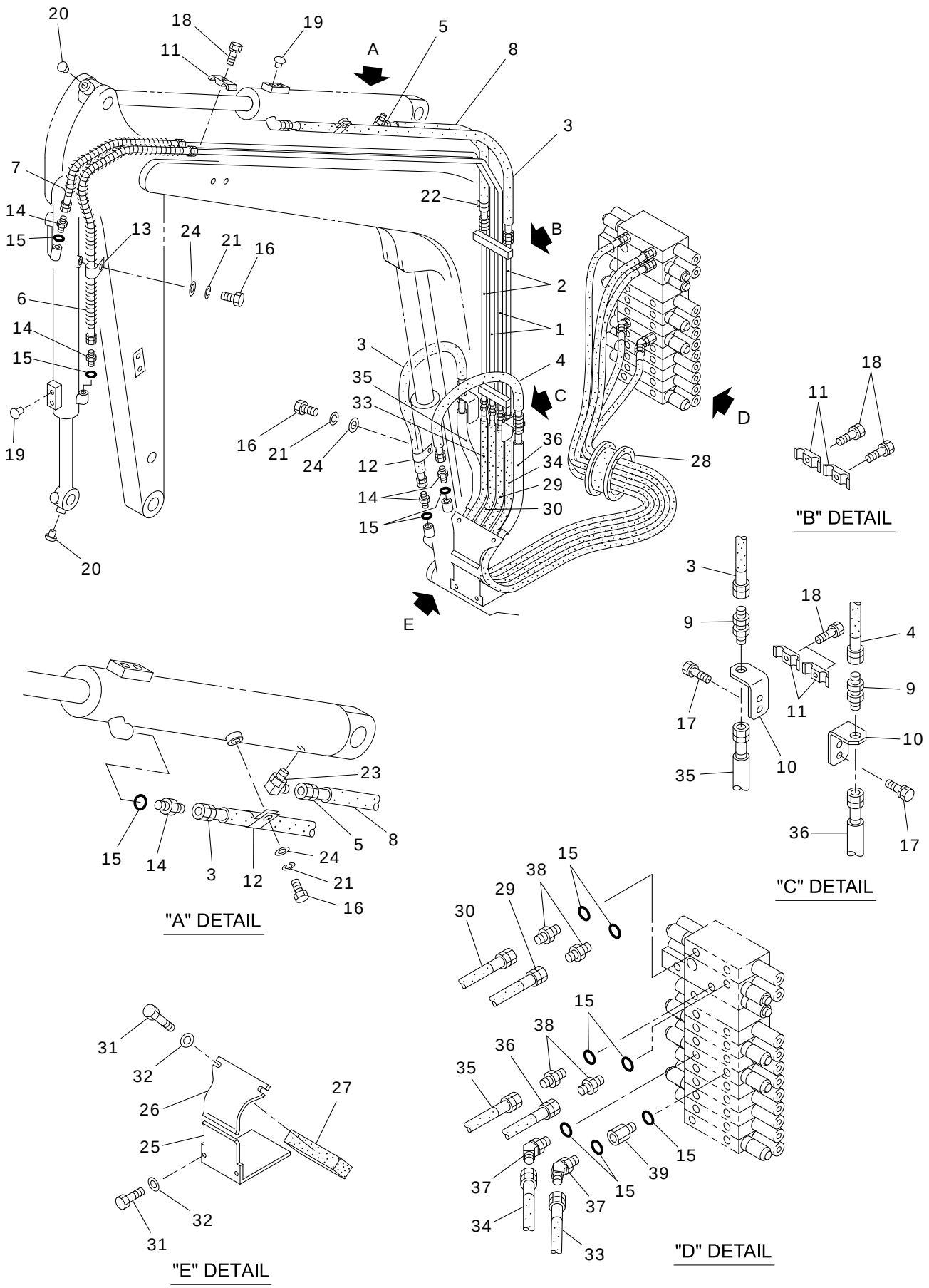

25V4-110400-1

https://truckmanualshub.com/

KEY No.	SUP.	PART No.	DESCRIPTION	Q'TY	CHAN.	SERIAL No.	REMARKS
● 0	×	F342 795 00	Piping Ass'y, Hoe Attachment	1		WQ010001-	
● 0-1	×	F342 756 00	Piping Ass'y, Hoe Attachment	1		WQ010001-	
1		D286 310 00	* Tube	2		WQ010001-	
2		D286 309 00	* Tube	2		WQ010001-	
3		D070 522 01	* Hose Ass'y	2		WQ010001-	L=1000
4		D070 522 02	* Hose Ass'y	1		WQ010001-	L=730
● 5		4070 001 92	* Hose Ass'y	1		WQ010001-	L=420
6		D070 141 05	* Hose Ass'y	1		WQ010001-	L=1050
6-1		D070 141 14	* Hose Ass'y (For Long Arm)	1		WQ010001-	L=1360
7		D070 141 02	* Hose Ass'y	1		WQ010001-	L=680
7-1		D070 141 17	* Hose Ass'y (For Long Arm)	1		WQ010001-	L=1000
● 8		4070 853 17	* Cover, Hose	M		WQ010001-	L=370
9		D060 032 00	* Connector	2		WQ010001-	
10		D418 453 00	* Bracket	2		WQ010001-	
11		4081 189 00	* Clamp, Tube	5		WQ010001-	
12		4080 000 05	* Clamp, Hose	2		WQ010001-	
13		4080 000 14	* Clamp, Hose	1		WQ010001-	
14		0713 700 03	* Adapter	5		WQ010001-	
15		0760 710 16	* Ring, O	12		WQ010001-	P14-90B
16		0513 100 16	* Bolt, Treatment	3		WQ010001-	M10X16
17		0520 100 20	* Bolt, Treatment (W/L.W)	4		WQ010001-	M10X20 P=1.25
18		0520 100 35	* Bolt, Treatment (W/L.W)	5		WQ010001-	M10X35 P=1.25
19		0690 201 08	* Plug, Hole	4		WQ010001-	
20		0690 201 09	* Plug, Hole	2		WQ010001-	
21		0590 100 00	* Washer, Lock	3		WQ010001-	M10
22		0820 067 04	* Band, Cable	1		WQ010001-	
23		0710 122 10	* Adapter	1		WQ010001-	
24		0593 100 00	* Washer, Flat	3		WQ010001-	M10
25		D458 437 00	* Cover	1		WQ010001-	
26		D458 443 00	* Cover	1		WQ010001-	
27		D580 160 00	* Pad	1		WQ010001-	
28		4580 730 00	* Pad	1		WQ010001-	
29		D070 460 12	* Hose Ass'y	1		WQ010001-	L=2350
29-1	☆	4405 319 01	* Decal (CA)	2		WQ010001-	4405 319 00
30		D070 460 13	* Hose Ass'y	1		WQ010001-	L=2400
30-1	☆	4405 319 02	* Decal (CB)	2		WQ010001-	4405 319 00
31		0513 120 25	* Bolt, Treatment	4		WQ010001-	M12X25
32		0595 120 00	* Washer, Treatment	4		WQ010001-	M12
33		D070 460 14	* Hose Ass'y	1		WQ010001-	L=2270
33-1	☆	4405 320 01	* Decal (AA)	2		WQ010001-	4405 320 00
34		D070 460 15	* Hose Ass'y	1		WQ010001-	L=2320
34-1	☆	4405 320 02	* Decal (AB)	2		WQ010001-	4405 320 00
35		D070 460 18	* Hose Ass'y	1		WQ010001-	L=2550
35-1	☆	4405 318 01	* Decal (BA)	2		WQ010001-	4405 318 00
36		D070 460 19	* Hose Ass'y	1		WQ010001-	L=2600
36-1	☆	4405 318 02	* Decal (BB)	2		WQ010001-	4405 318 00
37		0710 114 33	* Elbow, 45	2		WQ010001-	
38		0713 700 71	* Adapter	4		WQ010001-	
39		D060 536 00	* Connector	1		WQ010001-	

https://truckmanualshub.com/

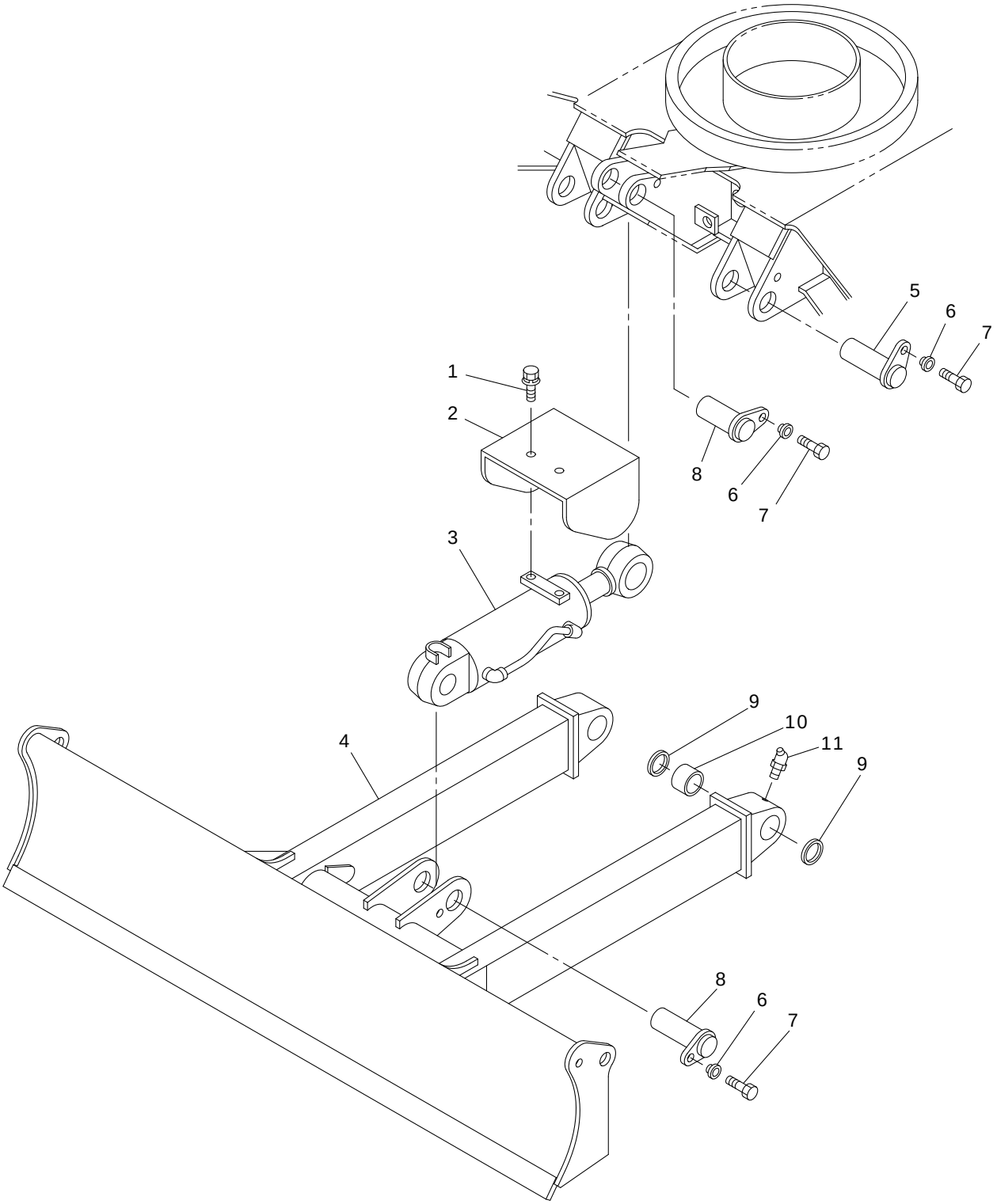

25V4-120100-1

https://truckmanualshub.com/

KEY No.	SUP.	PART No.	DESCRIPTION	Q'TY	CHAN.	SERIAL No.	REMARKS
0	×	F301 020 00	Attachment Ass'y, Blade	1		WQ010001-	
1		0518 100 20	* Bolt, Treatment (W/L.W, F.W)	2		WQ010001-	M10X20 P=1.25
2		D455 372 00	* Cover	1		WQ010001-	
3	#	0782 609 UA	* Cylinder Ass'y, Blade	1		WQ010001-	Sh. No. 5-12
4		D257 109 00	* Blade	1		WQ010001-	
5		D017 233 01	* Pin	2		WQ010001-	
6		D047 058 00	* Bushing	4		WQ010001-	
7		0555 160 30	* Bolt, Treatment	4		WQ010001-	M16X30
8		D017 234 01	* Pin	2		WQ010001-	
9		0765 033 29	* Seal, Dust	4		WQ010001-	
10		4043 358 03	* Bushing	2		WQ010001-	
11		0728 111 55	* Nipple, Grease	2		WQ010001-	PT1/8X67.5

12

https://truckmanualshub.com/

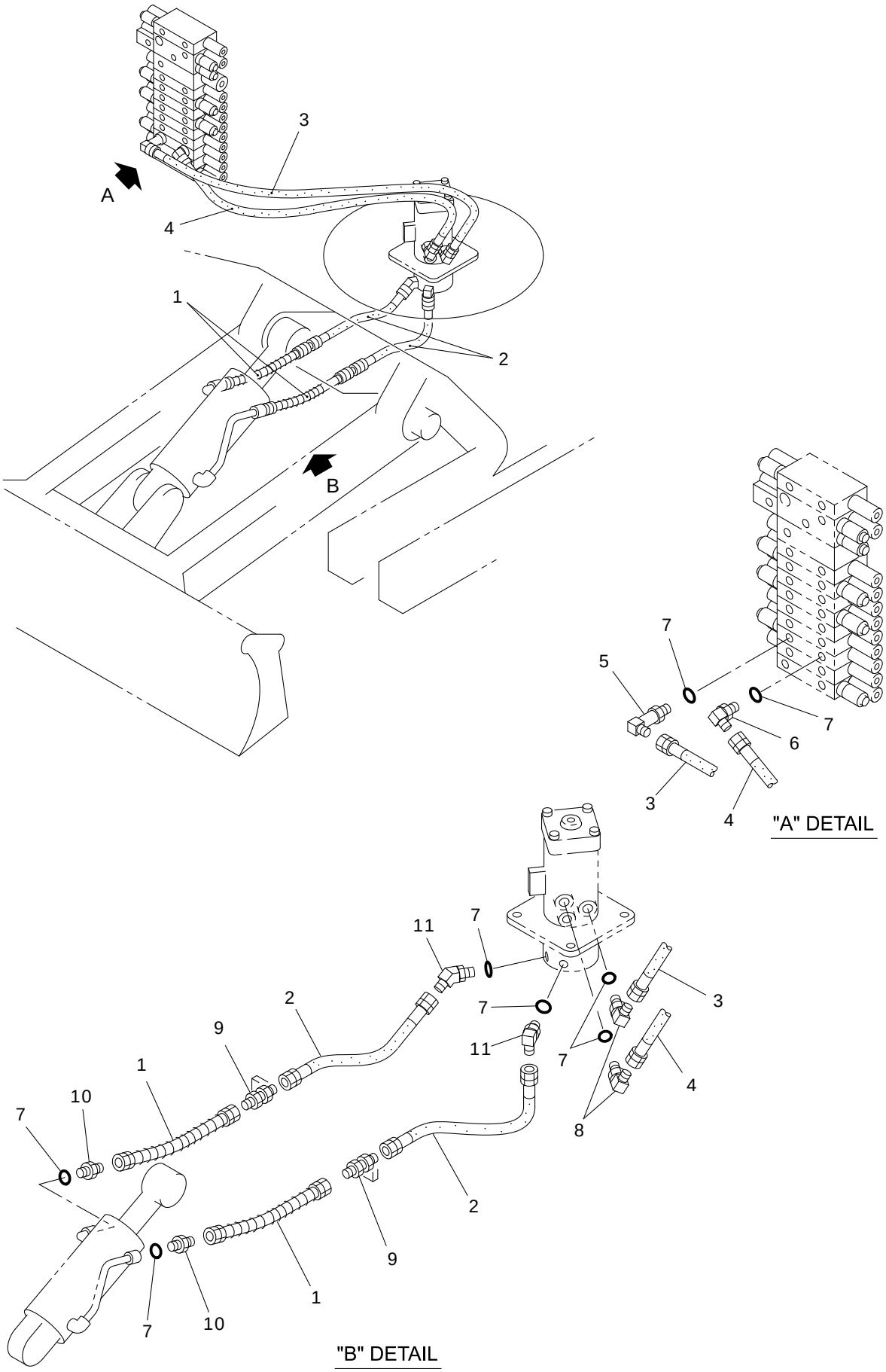

25V4-120200-1

https://truckmanualshub.com/

KEY No.	SUP.	PART No.	DESCRIPTION	Q'TY	CHAN.	SERIAL No.	REMARKS
● 0	×	F342 789 00	Piping Ass'y, Blade	1		WQ010001-	
● 0-1	×	F342 756 00	Piping Ass'y, Blade	1		WQ010001-	
1		4070 659 16	* Hose Ass'y	2		WQ010001-	L=400
2		4070 001 90	* Hose Ass'y	2		WQ010001-	L=270
3		4070 000 56	* Hose Ass'y	1		WQ010001-	L=950
4		4070 000 05	* Hose Ass'y	1		WQ010001-	L=850
5		0710 117 04	* Elbow, Reducer	1		WQ010001-	PF3/8XPF1/4
6		0710 113 32	* Elbow, Reducer	1		WQ010001-	PF3/8XPF1/4
7		0760 710 16	* Ring, O	8		WQ010001-	P14-90B
8		0710 113 32	* Elbow, Reducer	2		WQ010001-	PF3/8XPF1/4
9		D060 032 00	* Adapter	2		WQ010001-	
10		0713 700 03	* Adapter	2		WQ010001-	
11		0710 114 33	* Elbow, 45	2		WQ010001-	

https://truckmanualshub.com/

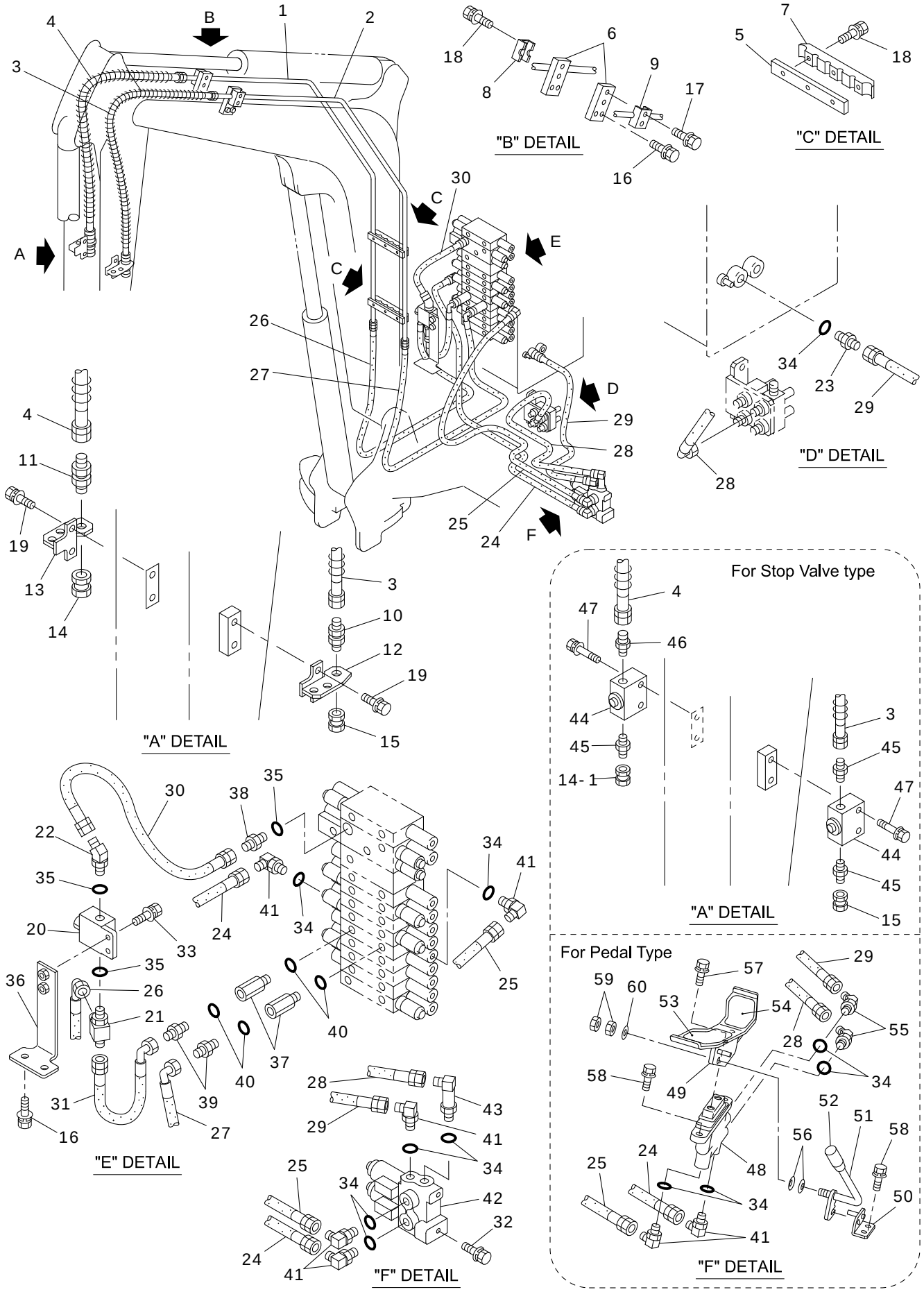

25V4-150100-1

https://truckmanualshub.com/

KEY No.	SUP.	PART No.	DESCRIPTION	Q'TY	CHAN.	SERIAL No.	REMARKS
● 0	×	F342 771 00	Piping Ass'y, First Spare	1		WQ010001-	
1		D286 313 00	* Tube	1		WQ010001-	
2		D286 314 00	* Tube	1		WQ010001-	
3		4070 662 04	* Hose Ass'y	1		WQ010001-	L=880
4		D070 372 02	* Hose Ass'y	1		WQ010001-	L=880
5		D082 107 00	* Seat, Clamp	2		WQ010001-	
6		D082 111 00	* Seat, Clamp	2		WQ010001-	
7		D081 194 00	* Clamp, Tube	2		WQ010001-	
8		D081 023 00	* Clamp, Tube	1		WQ010001-	
9		D081 192 00	* Clamp, Tube	1		WQ010001-	
10		D060 451 00	* Connector	1		WQ010001-	
11		D060 500 00	* Connector	1		WQ010001-	
12		D418 812 00	* Bracket	1		WQ010001-	
13		D418 813 00	* Bracket	1		WQ010001-	
14		0710 303 06	* Plug, Swivel	1		WQ010001-	
14-1		0710 303 04	* Plug, Swivel	1		WQ010001-	For Valve Type
15		0710 303 04	* Plug, Swivel	1		WQ010001-	
16		0518 100 25	* Bolt, Treatment (W/L.W, F.W)	6		WQ010001-	M10X25 P=1.25
17		0518 100 40	* Bolt, Treatment (W/L.W, F.W)	2		WQ010001-	M10X40 P=1.25
18		0518 100 45	* Bolt, Treatment (W/L.W, F.W)	8		WQ010001-	M10X45 P=1.25
19		0518 100 20	* Bolt, Treatment (W/L.W, F.W)	4		WQ010001-	M10X20 P=1.25
20		0725 005 UA	* Valve, Stop	1		WQ010001-	
21		0710 713 11	* Tee, Special	1		WQ010001-	
22		0710 114 44	* Elbow, 45	1		WQ010001-	
23		0713 700 70	* Connector	1		WQ010001-	
24		4070 548 42	* Hose Ass'y	1		WQ010001-	L=1670
25		4070 548 43	* Hose Ass'y	1		WQ010001-	L=1370
26		D070 367 12	* Hose Ass'y	1		WQ010001-	L=2130
26-1	☆	4405 307 03	* Decal (R1)	2		WQ010001-	4405 307 00
27		D070 367 13	* Hose Ass'y	1		WQ010001-	L=2180
27-1	☆	4405 309 03	* Decal (L1)	2		WQ010001-	4405 309 00
28		4070 551 13	* Hose Ass'y	1		WQ010001-	L=850
29		4070 548 72	* Hose Ass'y	1		WQ010001-	L=930
30		4070 783 28	* Hose Ass'y	1		WQ010001-	L=320
31		D070 363 20	* Hose Ass'y	1		WQ010001-	L=450
32		0517 080 25	* Bolt, Treatment (W/L.W, F.W)	2		WQ010001-	M8X25
33		0518 100 30	* Bolt, Treatment (W/L.W, F.W)	2		WQ010001-	M10X30 P=1.25
34		0760 710 12	* Ring, O	11		WQ010001-	P11-90B
35		0760 710 19	* Ring, O	3		WQ010001-	P18-90B
36		D419 133 00	* Bracket	1		WQ010001-	
37		D060 483 00	* Connector	2		WQ010001-	
38		0713 700 72	* Adapter	1		WQ010001-	
39		0713 700 94	* Adapter, Reducer	2		WQ010001-	PF3/8XPF1/2
40		0760 710 16	* Ring, O	4		WQ010001-	P14-90B
41		0710 122 09	* Elbow	7		WQ010001-	
42		0785 169 UA	* Valve, Solenoid	1		WQ010001-	
43		D060 028 00	* Elbow	1		WQ010001-	
44		0754 804 UA	* Cock	2		WQ010001-	
45		0712 310 32	* Adapter	3		WQ010001-	
46		0712 311 37	* Adapter, Reducer	1		WQ010001-	PF3/4XPT1/2
47		0518 100 60	* Bolt, Treatment (W/L.W, F.W)	4		WQ010001-	M10X60 P=1.25
● 48	#	0783 965 UA	* Valve Ass'y, Pilot	1		WQ010001-***	Sh. No. 5-14

15

https://truckmanualshub.com/

KEY No.	SUP.	PART No.	DESCRIPTION	Q'TY	CHAN.	SERIAL No.	REMARKS
● 48	#	0784 023 UA	* Valve Ass'y, Pilot	1	○	***-	Sh. No. 5-14
49		D501 059 00	* Pedal	1		WQ010001-	
50		D416 915 00	* Bracket	1		WQ010001-	
51		4497 989 00	* Lever	1		WQ010001-	
52		4096 033 00	* Grip	1		WQ010001-	
53		D406 930 00	* Pad, Rubber	1		WQ010001-	
54		D406 931 00	* Pad, Rubber	1		WQ010001-	
55		0710 121 00	* Elbow, 45	2		WQ010001-	
56		0591 080 00	* Washer, Conical Spring	2		WQ010001-	
57		0517 080 16	* Bolt, Treatment (W/L.W, F.W)	2		WQ010001-	M8X16
58		0517 080 20	* Bolt, Treatment (W/L.W, F.W)	4		WQ010001-	M8X20
59		0544 080 00	* Nut, Hex.	2		WQ010001-	M8
60		0593 080 00	* Washer, Flat	1		WQ010001-	M8

15

https://truckmanualshub.com/

[Memo]

https://truckmanualshub.com/

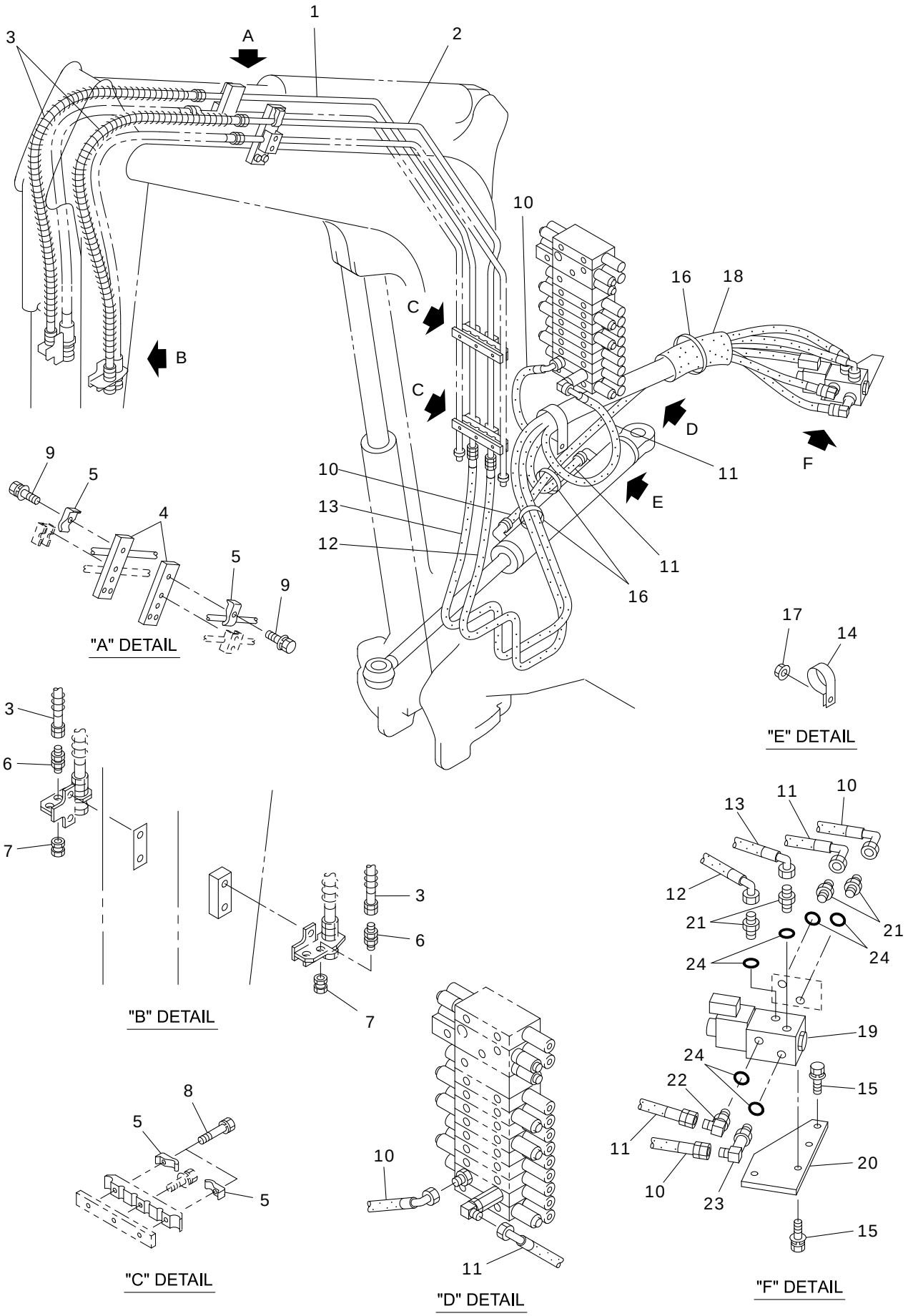

25V4-150200-1

https://truckmanualshub.com/

KEY No.	SUP.	PART No.	DESCRIPTION	Q'TY	CHAN.	SERIAL No.	REMARKS
● 0	×	F342 771 00	Piping Ass'y, Second Spare	1		WQ010001-	
1		D286 315 00	* Tube	1		WQ010001-	
2		D286 316 00	* Tube	1		WQ010001-	
3		4070 642 10	* Hose Ass'y	2		WQ010001-	L=950
4		D082 109 00	* Seat, Clamp	2		WQ010001-	
5		4081 118 00	* Clamp, Tube	6		WQ010001-	
6		D060 137 00	* Adapter	2		WQ010001-	
7		0710 303 02	* Plug, Swivel	2		WQ010001-	
8		0520 100 65	* Bolt, Treatment (W/L.W)	4		WQ010001-	M10X65 P=1.25
9		0518 100 40	* Bolt, Treatment (W/L.W, F.W)	2		WQ010001-	M10X40 P=1.25
10		4070 472 27	* Hose Ass'y	2		WQ010001-	L=1080
11		4070 472 26	* Hose Ass'y	2		WQ010001-	L=1170
12		4070 860 56	* Hose Ass'y	1		WQ010001-	L=2940
12-1	☆	4405 310 03	* Decal (L2)	2		WQ010001-	4405 310 00
13		4070 860 56	* Hose Ass'y	1		WQ010001-	L=2940
13-1	☆	4405 308 03	* Decal (R2)	2		WQ010001-	4405 308 00
14		4080 000 09	* Clamp, Hose	1		WQ010001-	
15		0517 080 16	* Bolt, Treatment (W/L.W, F.W)	4		WQ010001-	M8X16
16		0820 067 05	* Band, Cable	3		WQ010001-	
17		0524 100 00	* Nut, Hex. (W/F.W)	1		WQ010001-	M10 P=1.25
18		4070 504 02	* Cover, Hose	1		WQ010001-	L=120
19		0787 045 UA	* Valve, Solenoid	1		WQ010001-	
20		D419 131 00	* Bracket	1		WQ010001-* * *	
20		D419 547 00	* Bracket	1	○	* * *-	
21		0713 700 70	* Connector	4		WQ010001-	
22		0710 122 09	* Elbow	1		WQ010001-	
23		D060 028 00	* Elbow	1		WQ010001-	
24		0760 710 12	* Ring, O	6		WQ010001-	P11-90B

15

https://truckmanualshub.com/

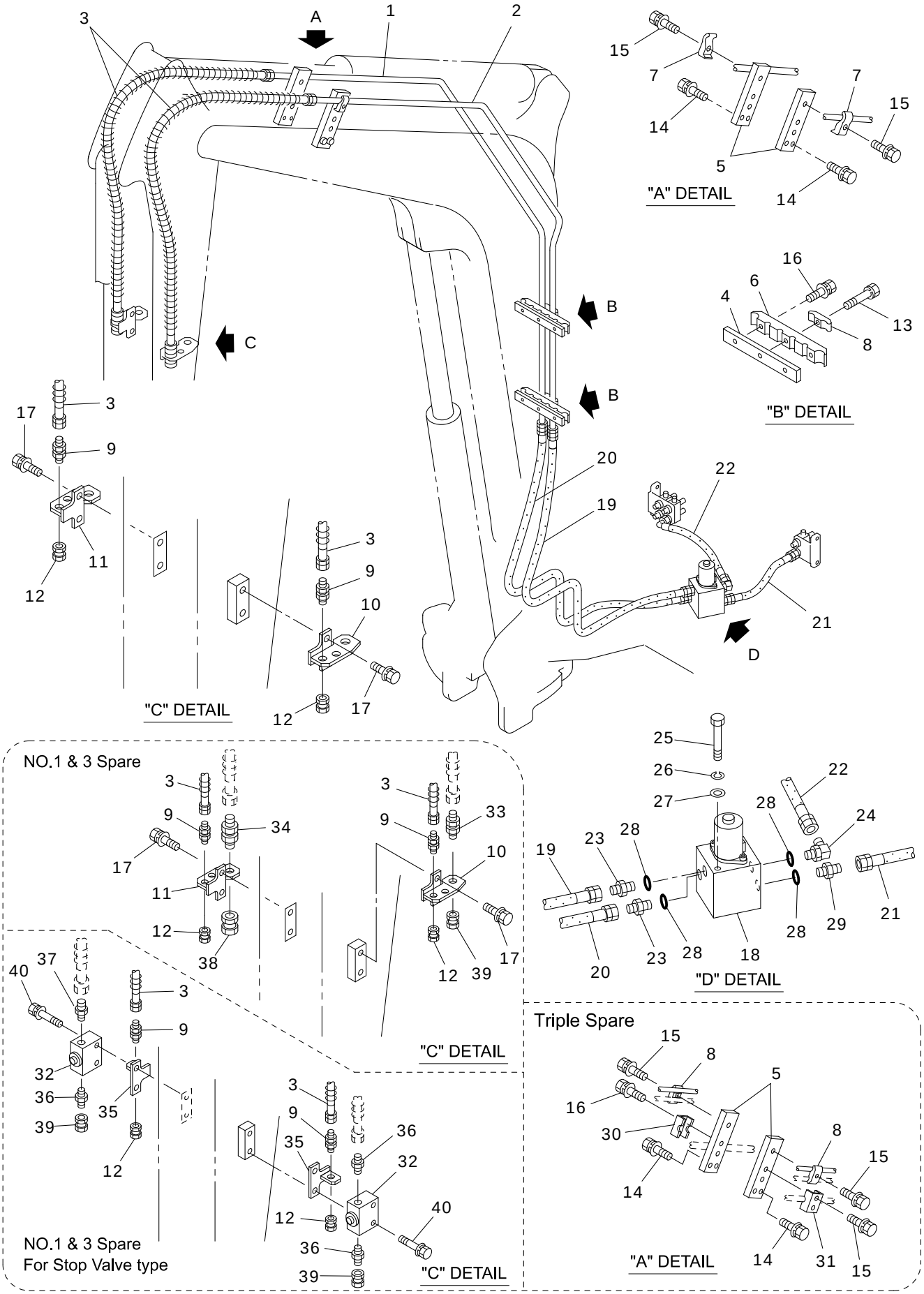

25V4-150300-1

https://truckmanualshub.com/

KEY No.	SUP.	PART No.	DESCRIPTION	Q'TY	CHAN.	SERIAL No.	REMARKS
● 0	×	F342 771 00	Piping Ass'y, Third Spare	1		WQ010001-	
1		D286 317 00	* Tube	1		WQ010001-	
2		D286 318 00	* Tube	1		WQ010001-	
3		4070 642 11	* Hose Ass'y	2		WQ010001-	L=1050
4		D082 107 00	* Seat, Clamp	2		WQ010001-	
5		D082 109 00	* Seat, Clamp	2		WQ010001-	
6		D081 194 00	* Clamp, Tube	2		WQ010001-	
7		4081 118 00	* Clamp, Tube	2		WQ010001-	
8		4081 189 00	* Clamp, Tube	4		WQ010001-	
9		D060 137 00	* Adapter	4		WQ010001-	
10		D418 812 00	* Bracket	1		WQ010001-	
11		D418 813 00	* Bracket	1		WQ010001-	
12		0710 303 02	* Plug, Swivel	2		WQ010001-	PF1/4
13		0520 100 65	* Bolt, Treatment (W/L.W)	2		WQ010001-	M10X65 P=1.25
14		0518 100 25	* Bolt, Treatment (W/L.W, F.W)	4		WQ010001-	M10X25 P=1.25
15		0518 100 40	* Bolt, Treatment (W/L.W, F.W)	4		WQ010001-	M10X40 P=1.25
16		0518 100 45	* Bolt, Treatment (W/L.W, F.W)	6		WQ010001-	M10X45 P=1.25
17		0518 100 20	* Bolt, Treatment (W/L.W, F.W)	4		WQ010001-	M10X20 P=1.25
18		0785 171 UA	* Valve Ass'y, Solenoid	1		WQ010001-	
19		D070 195 23	* Hose Ass'y	1		WQ010001-	L=1500
19-1	☆	4405 309 04	* Decal (L3)	2		WQ010001-	4405 309 00
20		D070 195 23	* Hose Ass'y	1		WQ010001-	L=1500
20-1	☆	4405 307 04	* Decal (R3)	2		WQ010001-	4405 307 00
21		4070 056 47	* Hose Ass'y	1		WQ010001-	L=250
22		4070 551 11	* Hose Ass'y	1		WQ010001-	L=300
23		0713 700 70	* Connector	2		WQ010001-	
24		0710 122 09	* Elbow	1		WQ010001-	
25		0513 080 90	* Bolt, Treatment	2		WQ010001-	M8X90
26		0590 080 00	* Washer, Lock	2		WQ010001-	M8
27		0593 080 00	* Washer, Flat	2		WQ010001-	M8
28		0760 710 12	* Ring, O	4		WQ010001-	P11-90B
29		0713 700 93	* Adapter, Reducer	1		WQ010001-	PF1/4XPF3/8
30		D081 023 00	* Clamp, Tube	1		WQ010001-	
31		D081 192 00	* Clamp, Tube	1		WQ010001-	
32		0754 804 UA	* Cock	2		WQ010001-	
33		D060 451 00	* Connector	1		WQ010001-	
34		D060 500 00	* Connector	1		WQ010001-	
35		D418 815 00	* Bracket	2		WQ010001-	
36		0712 310 32	* Adapter	3		WQ010001-	
37		0712 311 37	* Adapter, Reducer	1		WQ010001-	PF3/4XPT1/2
38		0710 303 06	* Plug, Swivel	1		WQ010001-	
39		0710 303 04	* Plug, Swivel	2		WQ010001-	
40		0518 100 60	* Bolt, Treatment (W/L.W, F.W)	4		WQ010001-	M10X60 P=1.25

https://truckmanualshub.com/

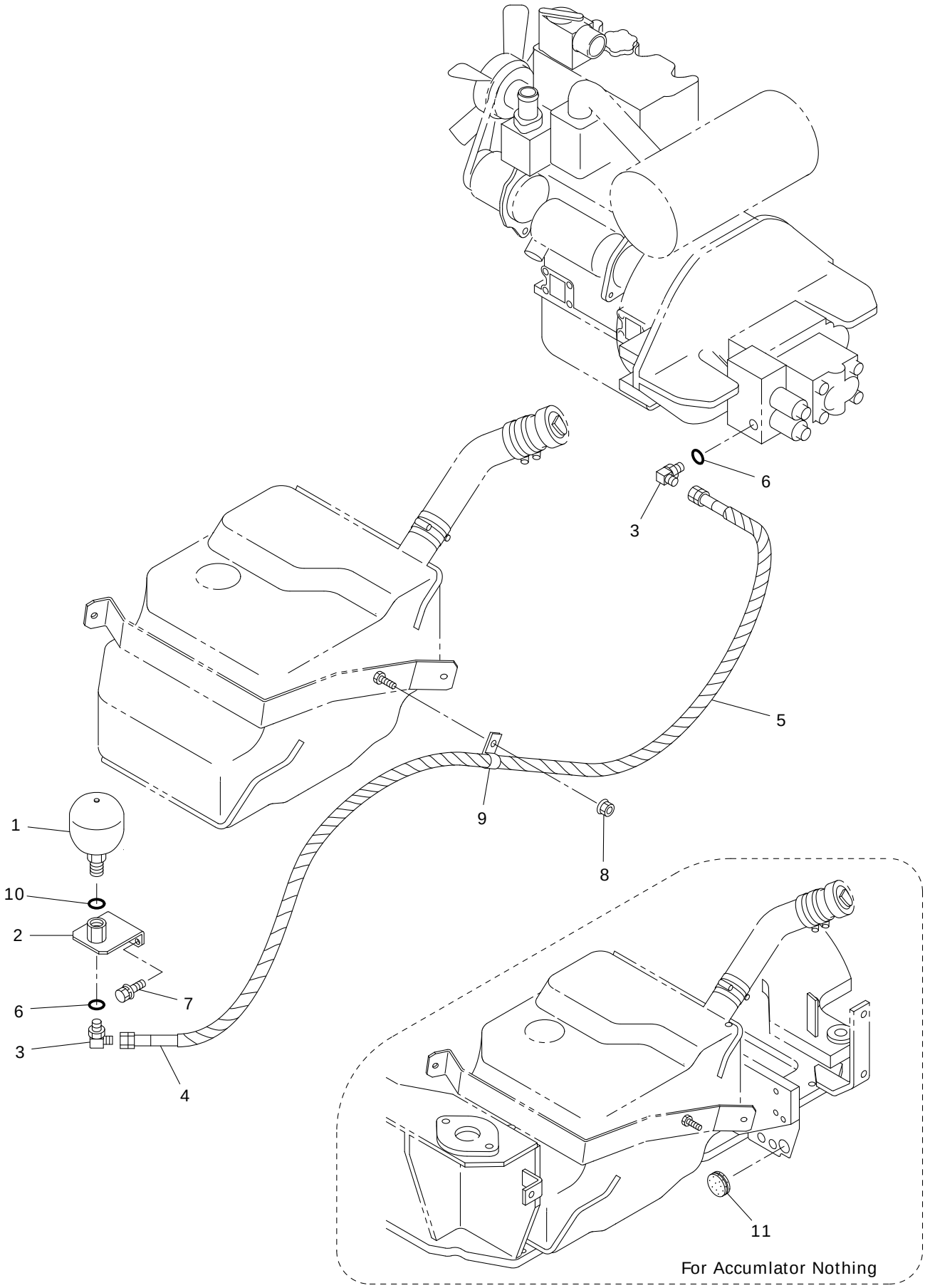

25V4-150400-1

https://truckmanualshub.com/

KEY No.	SUP.	PART No.	DESCRIPTION	Q'TY	CHAN.	SERIAL No.	REMARKS
0	×	F342 675 00	Accumulator Ass'y	0		WQ010001-	
1		0759 301 UA	* Accumulator	1		WQ010001-	
2		D060 518 00	* Connector	1		WQ010001-	
3		0710 122 10	* Elbow	2		WQ010001-	
4		4070 056 40	* Hose Ass'y	1		WQ010001-	L=1150
5		0820 803 05	* Tube, Corrugate	M		WQ010001-	L=1050
6		0760 710 16	* Ring, O	2		WQ010001-	P14-90B
7		0518 100 20	* Bolt, Treatment (W/L.W, F.W)	2		WQ010001-	M10X20 P=1.25
8		0524 100 00	* Nut, Hex. (W/F.W)	1		WQ010001-	M10 P=1.25
9		4080 000 04	* Clamp, Hose	1		WQ010001-	
10		0760 710 19	* Ring, O	1		WQ010001-	P18-90B
11		0910 940 26	* Grommet	1		WQ010001-	

https://truckmanualshub.com/

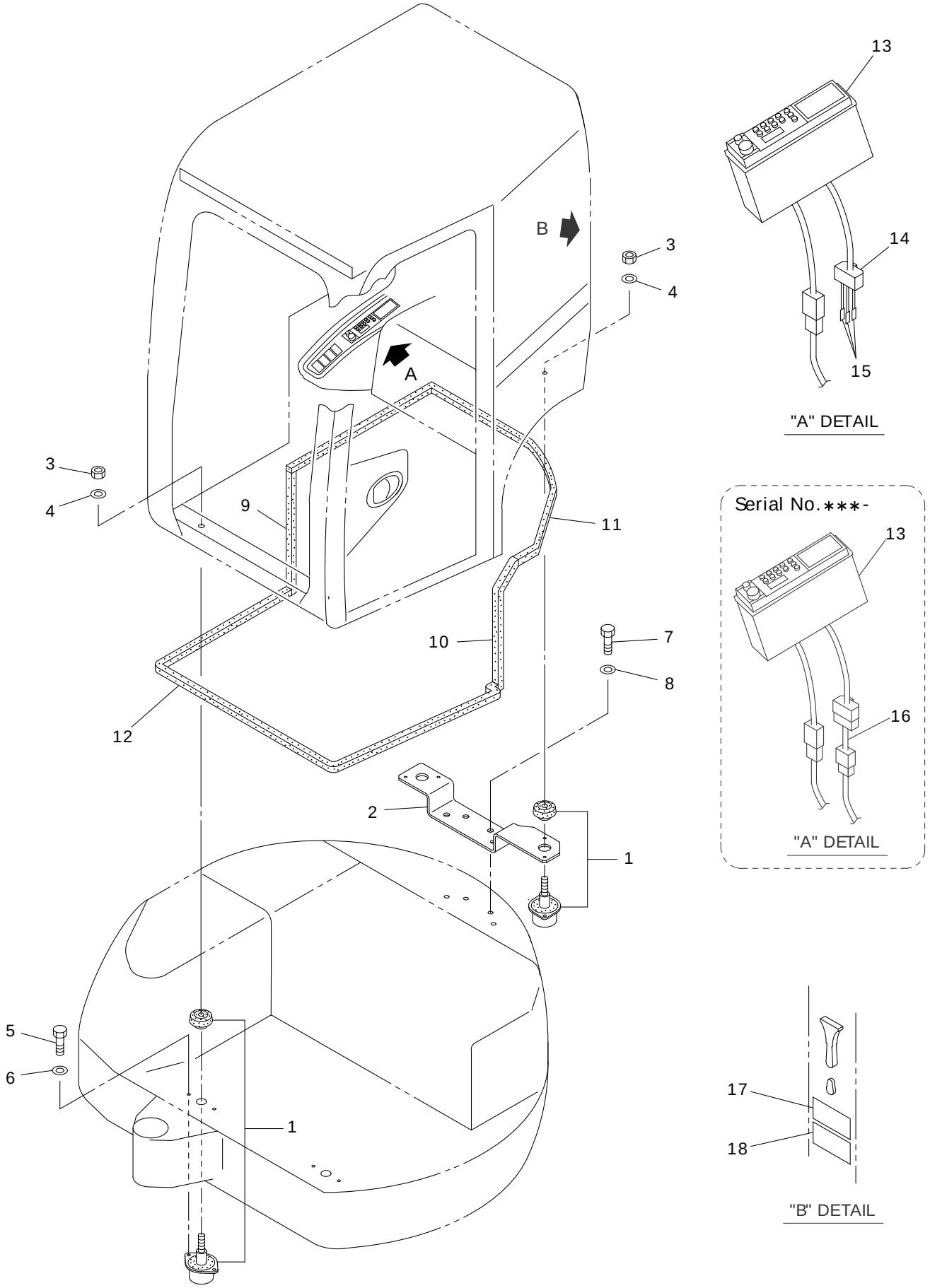

V4ALL-150500-1

15

IHI

OPERATOR ROOM ASS'Y (1)

MODEL 25V4

SHEET No 15-5

https://truckmanualshub.com/

KEY No.	SUP.	PART No.	DESCRIPTION	Q'TY	CHAN.	SERIAL No.	REMARKS
0	×	F355 182 00	Room Ass'y, Operator	1		WQ010001-	
1		0690 203 15	* Mount, Cab	4		WQ010001-	
2		D418 455 00	* Bracket	1		WQ010001-	
3		0585 200 00	* Nut, Treatment	4		WQ010001-	M20
4		0595 200 00	* Washer, Treatment	4		WQ010001-	M20
5		0555 100 40	* Bolt, Treatment	8		WQ010001-	M10X40
6		0595 100 00	* Washer, Treatment	8		WQ010001-	M10
7		0555 160 50	* Bolt, Treatment	4		WQ010001-	M16X50
8		0595 160 00	* Washer, Treatment	4		WQ010001-	M16
9		D493 753 02	* Seal, Sponge	1		WQ010001-	L=500
10		D493 753 01	* Seal, Sponge	1		WQ010001-	L=430
11		4550 906 25	* Seal, Sponge	1		WQ010001-	L=1900
12		4550 906 26	* Seal, Sponge	1		WQ010001-	L=2250
13		0850 500 10	* Radio	1		WQ010001-	For Japanese
14		0830 408 00	* Housing	1		WQ010001-***	
15		0820 657 08	* Terminal	3		WQ010001-***	
16		D592 436 00	* Harness	1		***-	
● 17		D408 378 00	* Plate, Name (For Tops)	1		WQ010001-	
● 18		D408 377 00	* Plate, Name (For Rops)	1		WQ010001-	

15

https://truckmanualshub.com/

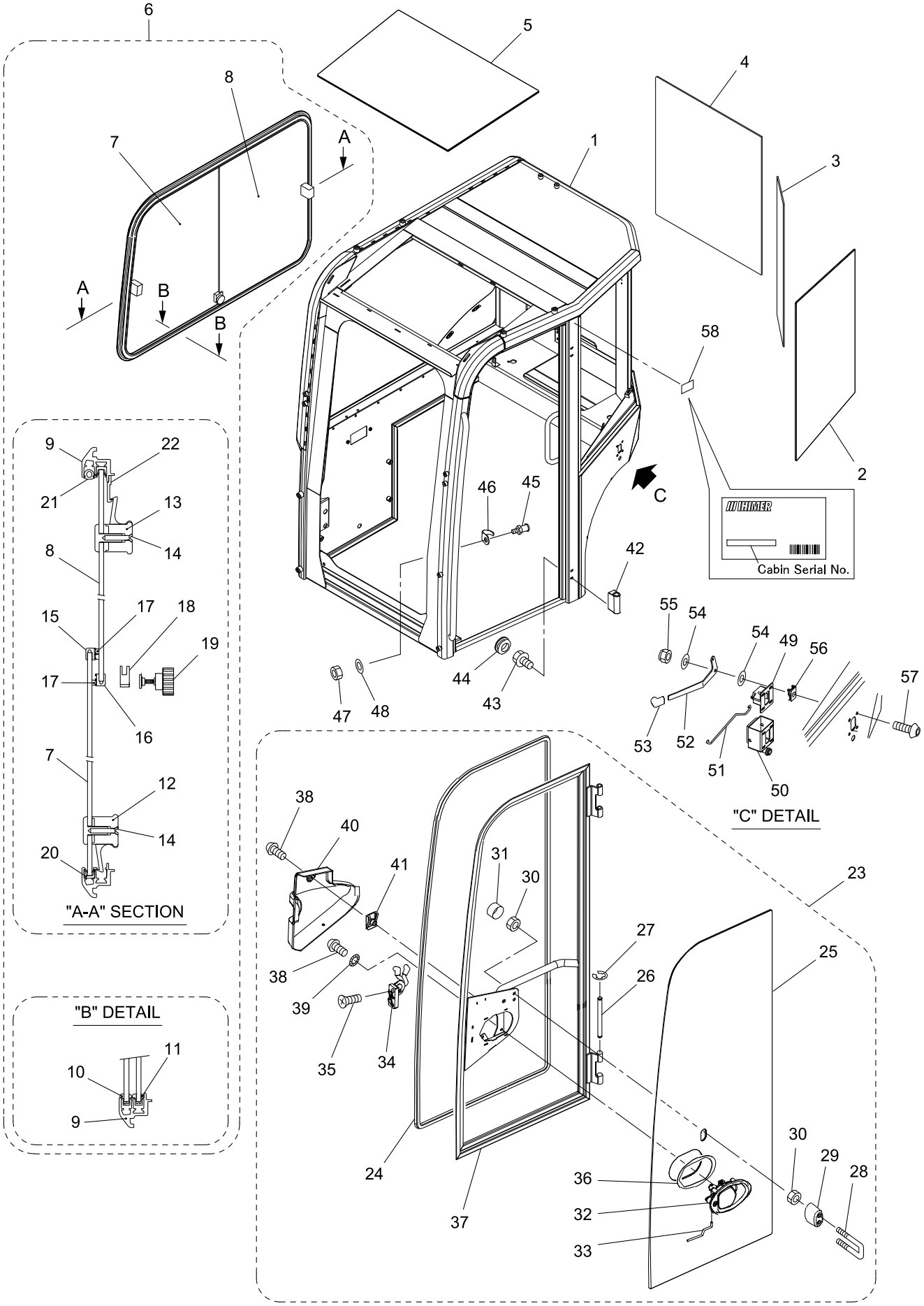

V4ALL-150600-1

注意:1. 適用号機はキャビンのシリアルＮｏ. です。NOTE:1. Application-type is serial No. of cabin.

https://truckmanualshub.com/

	KEY No.	SUP.	PART No.	DESCRIPTION	Q'TY	CHAN.	SERIAL No.	REMARKS
●	0	×	3034212018	Cabin Ass'y (Dark Grey)	1		13707272-	
●	0-1	×	3034212019	Cabin Ass'y (Light Grey)	1		13707272-	
	1		F354 810 00	* Cabin (Dark Grey)	1		13707272-	
	1-1		5290105300	* Cabin (Light Grey)	1		13707272-	
	2		4016000000	* Glass (L.H.)	1		13707272-	
	3		4016000001	* Glass (Rear Side)	1		13707272-	
	4		4016000002	* Glass (Rear)	1		13707272-	
	5		4016000003	* Glass (Roof)	1		13707272-	
	6		4016000004	* Window Ass'y, Side	1		13707272-	
	7		4016000005	** Glass (Front)	1		13707272-	
	8		4016000006	** Glass (Rear)	1		13707272-	
	9		4016000007	** Frame, Glass	1		13707272-	
	10		4016000008	** Shoe (Front)	1		13707272-	
	11		4016000009	** Shoe (Rear)	1		13707272-	
	12		4016000010	** Handle, Sliding (Front)	1		13707272-	
	13		4016000011	** Handle, Sliding (Rear)	1		13707272-	
	14		4016000012	** Bolt	4		13707272-	4.8X32
	15		4016000013	** Support, Brush (Front)	1		13707272-	
●	16		4016000014	** Support, Brush (Rear)	1		13707272-14707009	
●	16		4016000235	** Support, Brush (Rear)	1		14707010-	
	17		4016000015	** Brush	3		13707272-	
	18		4016000016	** Glass Blocking	1		13707272-	
	19		4016000017	** Handle, Glass Blocking	1		13707272-	
	20		4016000018	** Support, Sliding	2		13707272-	
	21		4016000019	** Gasket	2		13707272-	
	22		4016000020	** Handle, Stop	1		13707272-	
●	23		4016000233	* Door Ass'y (Dark Grey)	1		13707272-	
●	23-1		4016000234	* Door Ass'y (Light Grey)	1		13707272-	
●	24		4016000023	** Gasket	1		13707272-	L=4050
●	25		4016000024	** Glass (Door)	1		13707272-	
●	26		4015000088	** Pin, Hinge	2		13707272-	
●	27		4015000092	** Ring, Elastic	4		13707272-	d=10
●	28		4016000025	** Hook, Door Stop	1		13707272-	L=94
●	29		4016000027	** Absorber, Shock	1		13707272-	H=50
●	30		4016000029	** Nut, Special	4		13707272-	M8
●	31		4012000206	** Cap	2		13707272-	M8
●	32		4016000030	** Handle Ass'y	1		13707272-	
●	33		4016000031	** Rod	1		13707272-	
●	34		4013001426	** Lock, Door	1		13707272-	
●	35		3442505	** Bolt	1		13707272-	M8X40
●	36		4012000390	** Gasket	1		13707272-	
●	37		4016000021	** Frame, Door (Dark Grey)	1		13707272-	
●	37-1		4016000022	** Frame, Door (Light Grey)	1		13707272-	
●	38		4016000033	** Bolt	9		13707272-	M6X16
●	39		4012000185	** Washer Toothed	4		13707272-	M6
●	40		4016000034	** Cover	1		13707272-	
●	41		4016000035	** Clip	5		13707272-	M6
	42		4016000036	* Hinge	2		13707272-	
	43		4016000037	* Bolt	4		13707272-	M8X16
	44		4016000038	* Cap	4		13707272-	d=20
	45		4013001417	* Block	1		13707272-	
	46		4013001418	* Block, Security	1		13707272-	

https://truckmanualshub.com/

KEY No.	SUP.	PART No.	DESCRIPTION	Q'TY	CHAN.	SERIAL No.	REMARKS
47		4012000260	* Nut	1		13707272-	M12X1
48		4015000109	* Washer Flat	1		13707272-	12.5X28
49		4012000138	* Door Stop	1		13707272-	
50		4012000257	* Bracket	1		13707272-	
51		4016000039	* Rod, Tie	1		13707272-	
52		4016000040	* Lever	1		13707272-	
53		4012000259	* Handle	1		13707272-	
54		4016000041	* Washer Flat	2		13707272-	8.5X24
● 55		4015000091	* Nut	1		13707272-	M8
● 56		4016000035	* Clip	1		13707272-	M6
● 57		4016000033	* Bolt	1		13707272-	M6X16
● 58		2034207015	* Decal (Serial No., Cabin)	1		13707272-	

https://truckmanualshub.com/

[Memo]

https://truckmanualshub.com/

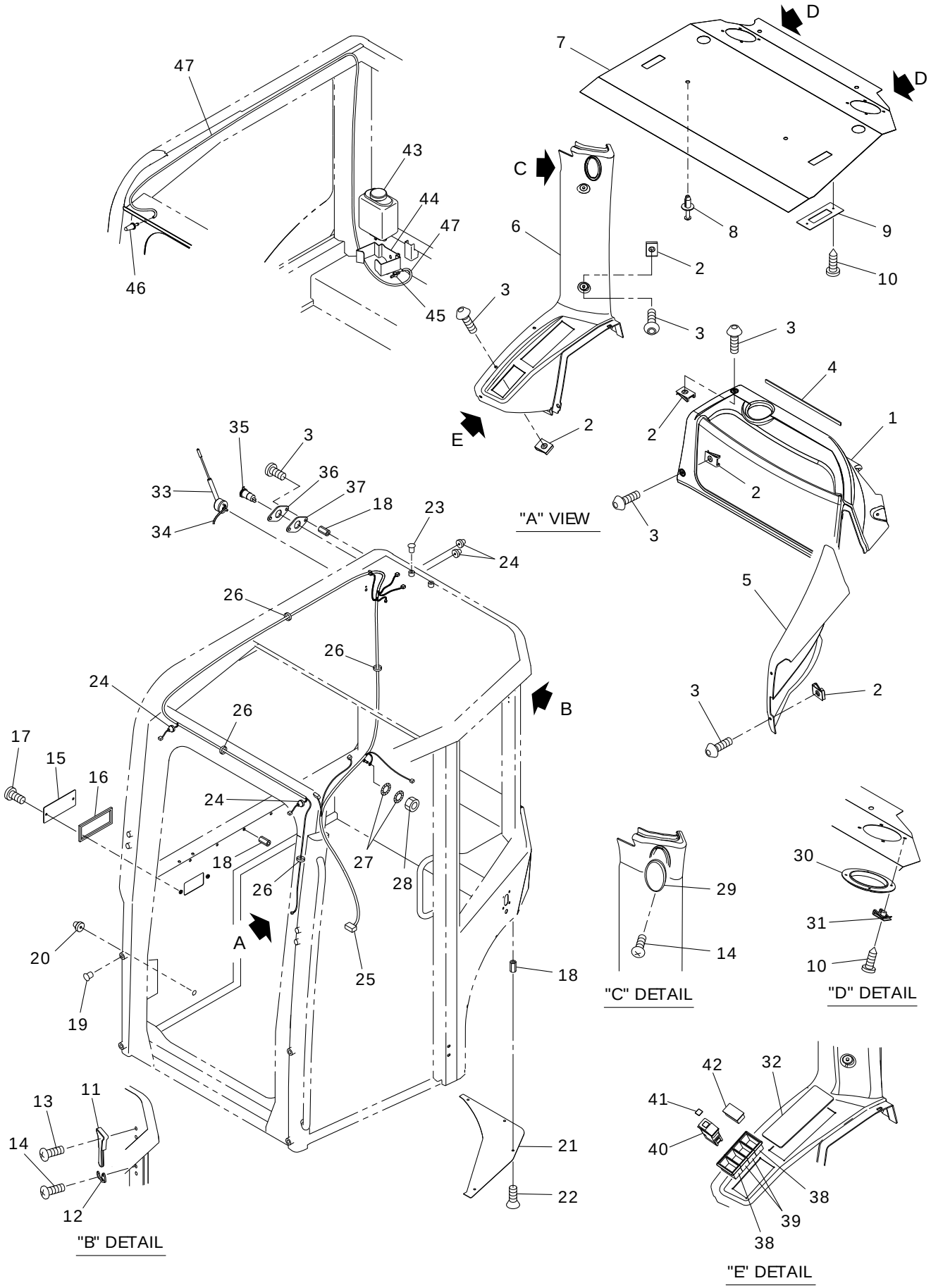

V4ALL-150700-1

https://truckmanualshub.com/

KEY No.	SUP.	PART No.	DESCRIPTION	Q'TY	CHAN.	SERIAL No.	REMARKS
● 0	×	3034212018	Cabin Ass'y (Dark Grey)	1		13707272-	
● 0-1	×	3034212019	Cabin Ass'y (Light Grey)	1		13707272-	
1		4016000042	* Cover (Rear)	1		13707272-	
2		4016000035	* Clip	12		13707272-	M6
3		4016000033	* Bolt	12		13707272-	M6X16
4		4016000043	* Gasket	1		13707272-	L=325
5		4016000044	* Cover (Left)	1		13707272-	
6		4016000045	* Cover (Right Upright)	1		13707272-	
7		4016000046	* Roof Coating	1		13707272-	
8		4016000047	* Clip	4		13707272-	d=8
9		4016000048	* Bracket	2		13707272-	
10		4016000049	* Bolt	8		13707272-	4.2X22
11		4016000050	* Hammer, Emergency	1		13707272-	
12		4012000239	* Hook	1		13707272-	
13		4012000291	* Bolt	2		13707272-	3.5X16
14		4016000051	* Bolt	4		13707272-	4.2X13
15		4016000052	* Bracket	1		13707272-	
16		4016000053	* Gasket	1		13707272-	L=470
17		4016000054	* Bolt	2		13707272-	M6X12
18		4012000356	* Nut	11		13707272-	M6
19		4016000055	* Plug	8		13707272-	d=13X11
20		4012000297	* Plug, Rubber	1		13707272-	
21		4016000056	* Plate (Lower)	1		13707272-	
22		4016000057	* Bolt	4		13707272-	M6X16
23		4016000058	* Plug	8		13707272-	d=12X11.5
24		4012000367	* Plug, Rubber	4		13707272-	
25		4016000059	* Harness	1		13707272-	
26		4016000060	* Band, Cable	6		13707272-	4.8X200
27		4012000185	* Washer Toothed	2		13707272-	M6
28		4012000303	* Nut	1		13707272-	M6
29		4016000061	* Light	1		13707272-	
30		4016000062	* Cover, Audio	1		13707272-	
31		4016000063	* Clip	4		13707272-	
32		4012000274	* Cover	1		13707272-	
33		4012000314	* Antenna	1		13707272-	
34		4012000316	* Cable, Antenna	1		13707272-	L=2300
35		4016000064	* Plug	1		13707272-	
36		4016000065	* Bracket	1		13707272-	
37		4016000066	* Gasket	1		13707272-	
38		4012000251	* Frame, Side Switch	2		13707272-	
39		4012000252	* Frame, Central Switch	2		13707272-	
40		4012000250	* Switch, Wiper	1		13707272-	
41		4012000254	* Label	1		13707272-	
42		4012000255	* Cap	3		13707272-	
43		4012000256	* Tank	1		13707272-	
44		4016000067	* Bracket	1		13707272-	
45		4012000216	* Valve, Connection	1		13707272-	
46		4012000245	* Atomizer	1		13707272-	
47		4016000068	* Pipe	1		13707272-	L=2550

https://truckmanualshub.com/

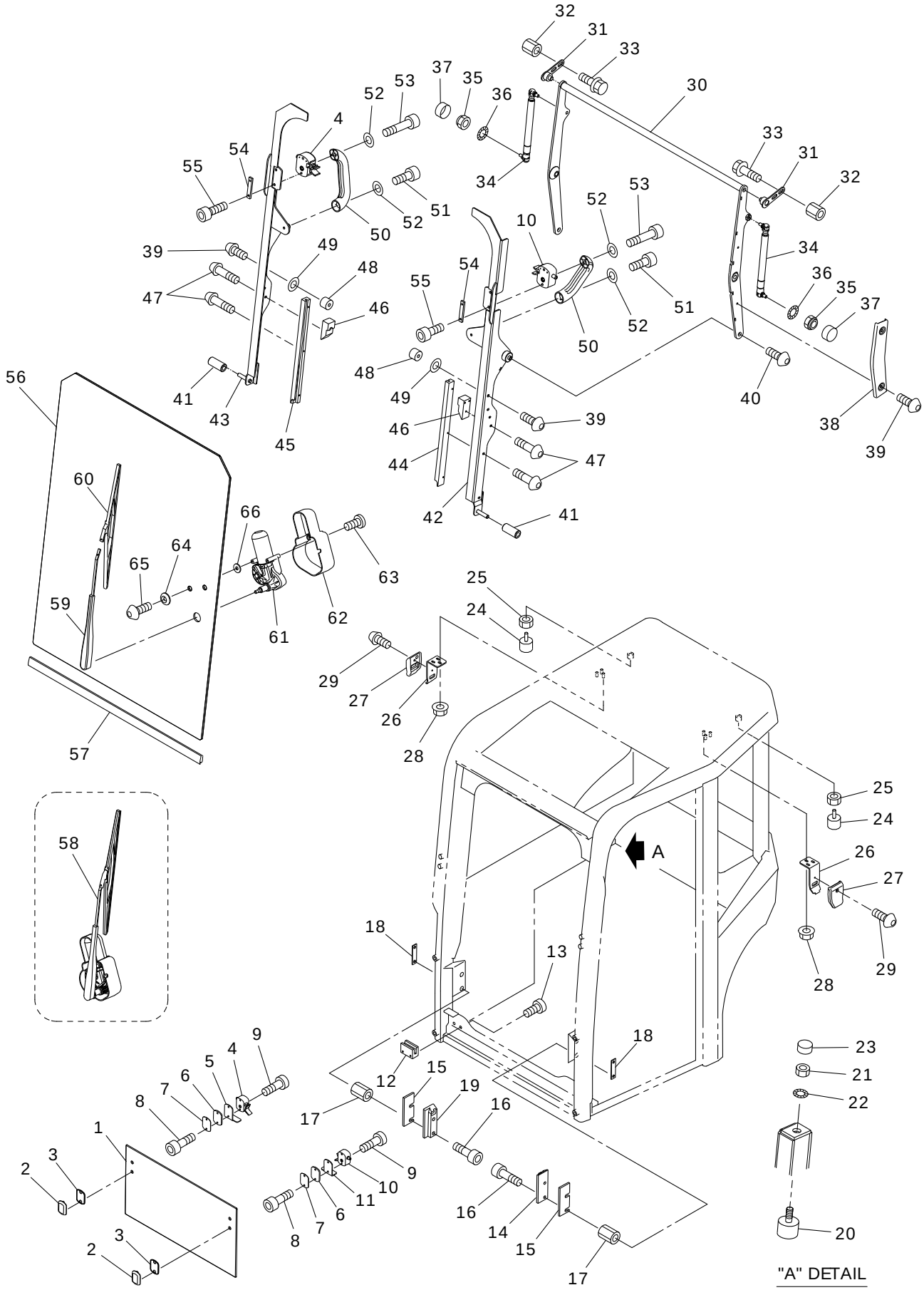

V4ALL-150800-1

https://truckmanualshub.com/

KEY No.	SUP.	PART No.	DESCRIPTION	Q'TY	CHAN.	SERIAL No.	REMARKS
● 0	×	3034212018	Cabin Ass'y (Dark Grey)	1		13707272-	
● 0-1	×	3034212019	Cabin Ass'y (Light Grey)	1		13707272-	
1		4016000069	* Glass	1		13707272-	
2		4016000070	* Lock, Cover	2		13707272-	
3		4016000071	* Gasket	2		13707272-	
4		4016000072	* Lock (R.H.)	2		13707272-	
5		4016000073	* Handle (R.H.)	1		13707272-	
6		4016000074	* Spacer	2		13707272-	
7		4016000075	* Gasket	2		13707272-	
8		4016000076	* Bolt	4		13707272-	M6X25
9		4016000077	* Bolt	2		13707272-	M8X25
10		4016000078	* Lock (L.H.)	2		13707272-	
11		4016000079	* Handle (L.H.)	1		13707272-	
12		4016000080	* Shoe (Lower)	2		13707272-	
13		4016000081	* Bolt	4		13707272-	M8X20
14		4016000082	* Shoe (L.H.)	1		13707272-	
15		4016000083	* Spacer	2		13707272-	
16		4016000084	* Bolt	4		13707272-	M8X35
17		4012000370	* Nut	4		13707272-	M8
18		4016000085	* Bracket	2		13707272-	
19		4016000086	* Shoe (R.H.)	1		13707272-	
20		4016000087	* Stopper, Rubber	2		13707272-	M6X15 H=15
21		4012000186	* Nut	2		13707272-	M6
22		4012000185	* Washer Toothed	2		13707272-	M6
23		4012000240	* Cap	2		13707272-	M6
24		4016000088	* Stopper, Rubber	2		13707272-	M6X18 H=20
25		4016000089	* Nut, Lock	2		13707272-	M6
26		4016000090	* Bracket	2		13707272-	
27		4016000091	* Protection, Door	2		13707272-	
28		4016000029	* Nut, Special	6		13707272-	M8
29		4016000033	* Bolt	2		13707272-	M6X16
30		4016000092	* Frame, Door	1		13707272-	
31		4016000093	* Bracket	2		13707272-	
32		4016000094	* Nut	4		13707272-	M8
33		4016000095	* Bolt	4		13707272-	M8X20
34		4016000096	* Spring, Gas	2		13707272-	400N-M8
35		4015000091	* Nut, Lock	2		13707272-	M8
36		4012000428	* Washer, Special	4		13707272-	M8
37		4012000206	* Cap	2		13707272-	M8
38		4016000097	* Cover	1		13707272-	
39		4016000054	* Bolt	4		13707272-	M6X12
40		4016000098	* Bolt	2		13707272-	M8X25
41		4016000099	* Bushing	2		13707272-	
42		4016000100	* Frame (L.H.)	1		13707272-	
43		4016000101	* Frame (R.H.)	1		13707272-	
44		4016000102	* Guide (L.H.)	1		13707272-	
45		4016000103	* Guide (R.H.)	1		13707272-	
46		4016000104	* Shoe	2		13707272-	
47		4013001450	* Bolt	10		13707272-	M5X16
48		4016000105	* Stopper, Rubber	2		13707272-	M6 H=15
49		4012000215	* Washer Flat	2		13707272-	
50		4016000106	* Handle	2		13707272-	

https://truckmanualshub.com/

KEY No.	SUP.	PART No.	DESCRIPTION	Q'TY	CHAN.	SERIAL No.	REMARKS
51		4016000107	* Bolt	2		13707272-	M8X20
52		4012000189	* Washer Flat	4		13707272-	M8
53		4016000108	* Bolt	2		13707272-	M8X40
54		4016000109	* Bracket	2		13707272-	
55		4016000110	* Bolt	4		13707272-	M6X14
56		4016000111	* Glass	1		13707272-	
57		4016000112	* Gasket	1		13707272-	L=775
58		4016000113	* Wiper	1		13707272-	
59		4013001438	** Arm, Wiper	1		13707272-	
60		4013001437	** Blade, Wiper	1		13707272-	L=400
61		4016000114	** Motor, Wiper	1		13707272-	
62		4012000352	** Cover, Motor	1		13707272-	
63		4016000033	* Bolt	2		13707272-	M6X16
64		4012000210	* Washer, Nylon	2		13707272-	d=19.5
65		4016000115	* Bolt	2		13707272-	M6X25
66		4016000116	* Washer, Special	2		13707272-	d=6.5X18

https://truckmanualshub.com/

[Memo]

https://truckmanualshub.com/

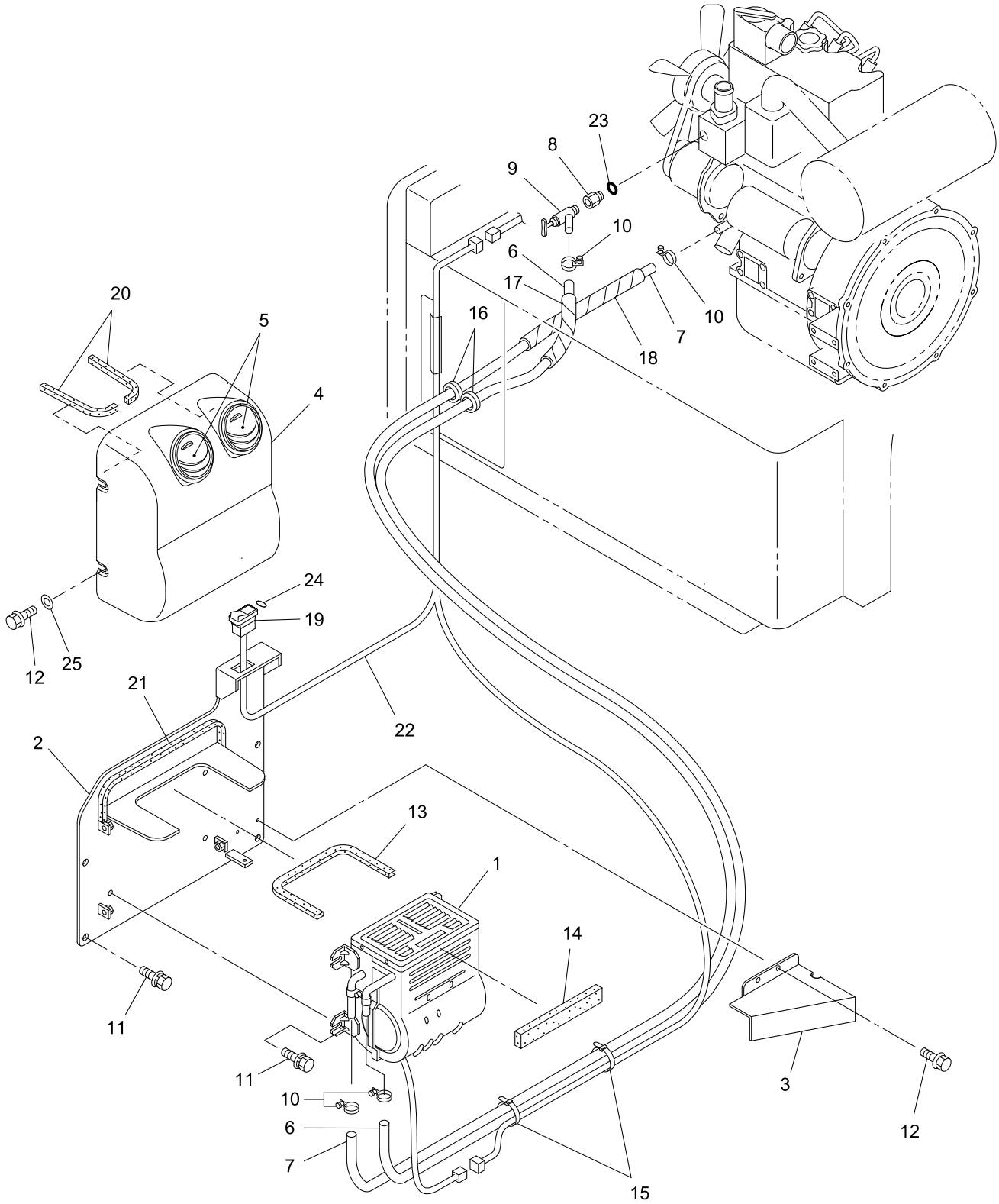

25V4-150900-1

https://truckmanualshub.com/

	KEY No.	SUP.	PART No.	DESCRIPTION	Q'TY	CHAN.	SERIAL No.	REMARKS
●	0	×	F355 307 00	Heater Ass'y, Car	1		WQ010001-WQ020000	
	1		0857 056 03	* Heater, Car	1		WQ010001-	
	2		D419 472 00	* Bracket	1		WQ010001-	
	3		D458 149 00	* Cover	1		WQ010001-	
	4		D465 358 00	* Panel	1		WQ010001-	
	5		0820 023 16	* Duct	2		WQ010001-	
	6		4070 102 39	* Hose, Water	M		WQ010001-	L=900
	7		4070 102 22	* Hose, Water	M		WQ010001-	L=1000
	8		0713 704 03	* Adapter	1		WQ010001-	
	9		0729 910 35	* Valve	1		WQ010001-	
	10		0690 083 05	* Clamp, Hose	4		WQ010001-	
	11		0518 100 20	* Bolt, Treatment (W/L.W, F.W)	8		WQ010001-	M10X20 P=1.25
●	12		0438 060 16	* Bolt, Treatment(W/L.W, F.W)	6		WQ010001-***	M6X16
●	12		0517 060 16	* Bolt, Treatment(W/L.W, F.W)	6	○	***-	M6X16
	13		4550 726 00	* Seal	M		WQ010001-	L=400
	14		D493 439 01	* Panel, Sponge	1		WQ010001-	
	15		0820 067 05	* Band, Cable	2		WQ010001-	
	16		0910 942 02	* Grommet	2		WQ010001-	
	17		0820 803 06	* Tube, Corrugate	M		WQ010001-	L=100
	18		0820 803 06	* Tube, Corrugate	M		WQ010001-	L=200
	19		0858 314 34	* Switch Ass'y, Heater	1		WQ010001-	
	20		D493 626 00	* Panel, Sponge	2		WQ010001-	
	21		D493 732 00	* Panel, Sponge	1		WQ010001-	
	22		D592 309 00	* Harness	1		WQ010001-	
	23		0760 710 16	* Ring, O	1		WQ010001-	P14-90B
	24		D407 820 00	* Decal	1		WQ010001-	
●	25		0593 080 00	* Washer, Flat	4		WQ010001-	M8

15

https://truckmanualshub.com/

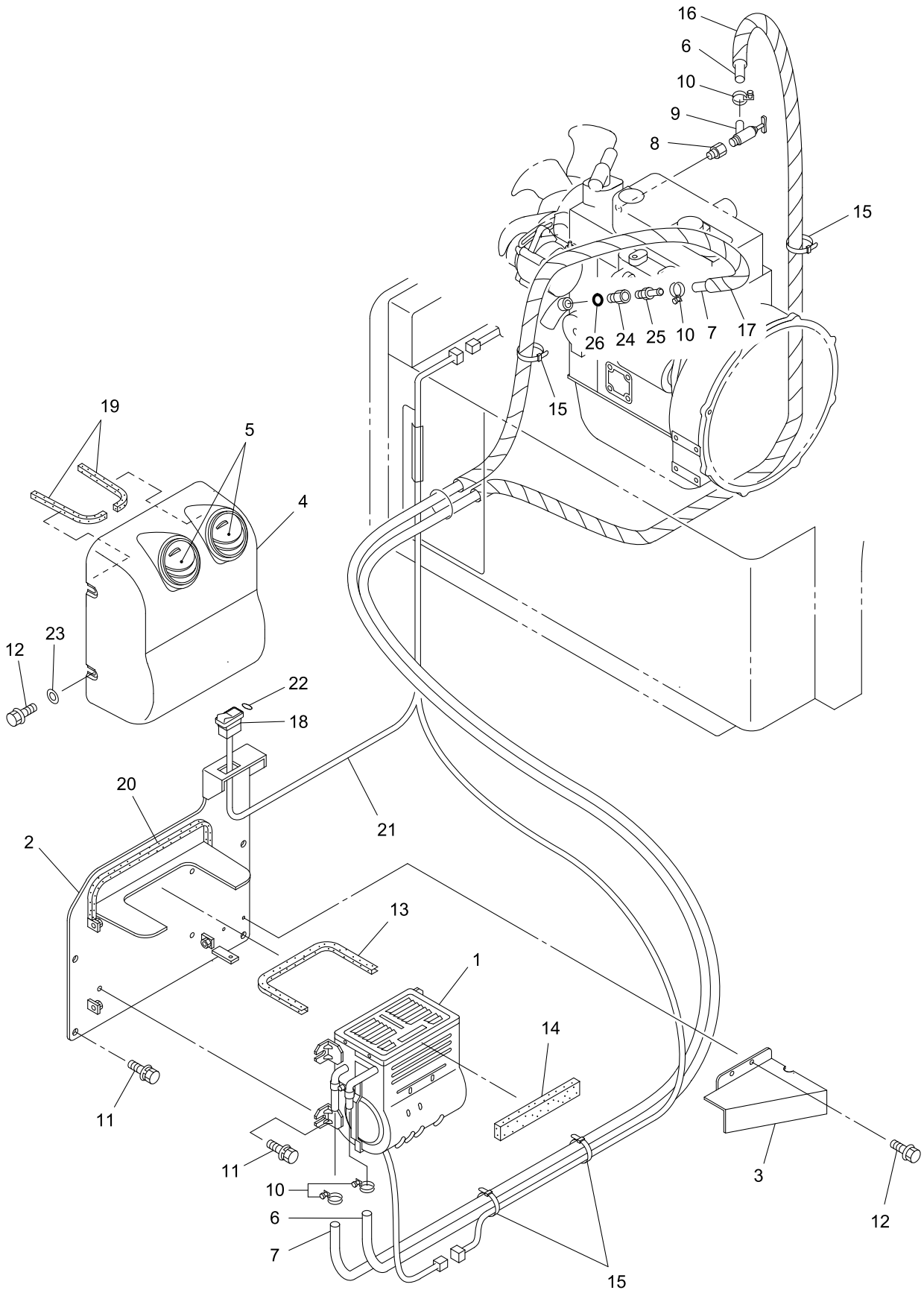

25V4-15090A-1

https://truckmanualshub.com/

KEY No.	SUP.	PART No.	DESCRIPTION	Q'TY	CHAN.	SERIAL No.	REMARKS
0	×	F355 290 00	Heater Ass'y, Car	1		WQ020001-	
1		0857 056 03	* Heater, Car	1		WQ020001-	
2		D419 472 00	* Bracket	1		WQ020001-	
3		D458 149 00	* Cover	1		WQ020001-	
4		D465 358 00	* Panel	1		WQ020001-	
5		0820 023 16	* Duct	2		WQ020001-	
6		4070 102 21	* Hose, Water	M		WQ020001-	L=1700
7		4070 102 48	* Hose, Water	M		WQ020001-	L=800
8		0710 503 03	* Socket	1		WQ020001-	
9		0729 910 35	* Valve	1		WQ020001-	
10		0690 083 05	* Clamp, Hose	4		WQ020001-	
11		0518 100 20	* Bolt, Treatment (W/L.W, F.W)	8		WQ020001-	M10X20 P=1.25
12		0517 060 16	* Bolt, Treatment(W/L.W, F.W)	6		WQ020001-	M6X16
13		4550 726 00	* Seal	M		WQ020001-	L=400
14		D493 439 01	* Panel, Sponge	1		WQ020001-	
15		0820 067 05	* Band, Cable	4		WQ020001-	
16		0820 803 06	* Tube, Corrugate	M		WQ020001-	L=1300
17		0820 803 06	* Tube, Corrugate	M		WQ020001-	L=400
18		0858 314 34	* Switch Ass'y, Heater	1		WQ020001-	
19		D493 626 00	* Panel, Sponge	2		WQ020001-	
20		D493 732 00	* Panel, Sponge	1		WQ020001-	
21		D592 309 00	* Harness	1		WQ020001-	
22		D407 820 00	* Decal	1		WQ020001-	
23		0593 080 00	* Washer, Flat	4		WQ020001-	M8
24		0713 704 03	* Adapter	1		WQ020001-	
25		4072 220 00	* Nipple	1		WG010001-	
26		0760 710 16	* Ring, O	1		WQ020001-	P14-90B

https://truckmanualshub.com/

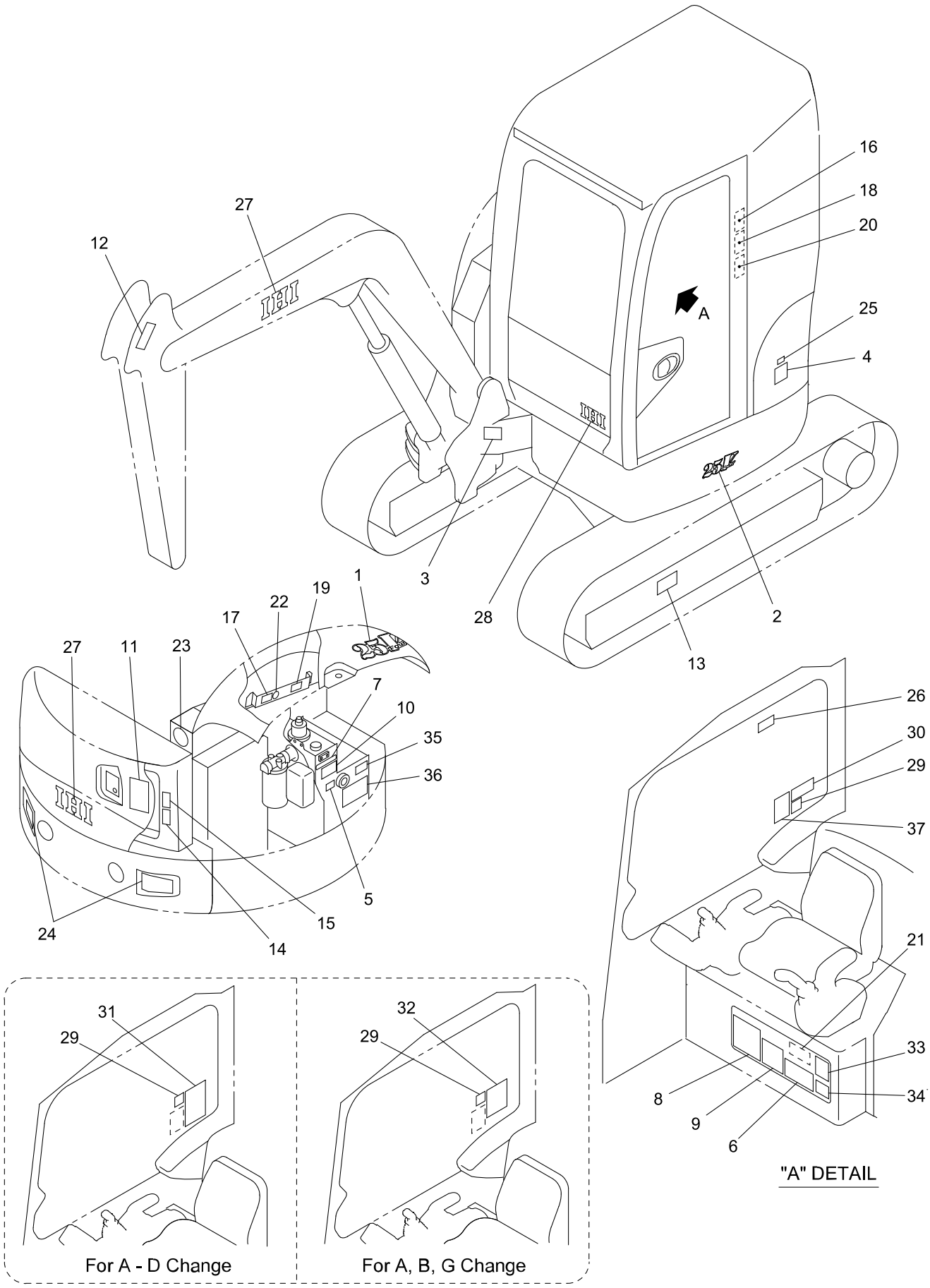

25V4-151000-1

https://truckmanualshub.com/

KEY No.	SUP.	PART No.	DESCRIPTION	Q'TY	CHAN.	SERIAL No.	REMARKS
0	×	F377 840 00	Decal Ass'y	1		WQ010001-	
0-1	×	F377 855 00	Decal Ass'y	1		WQ010001-	
0-2	×	F377 856 00	Decal Ass'y	1		WQ010001-	
1		D408 404 00	* Decal (Model)	1		WQ010001-	
2		D408 413 00	* Decal (Model)	1		WQ010001-	
3	×	D405 094 00	* Decal (Serial No.)	1		WQ010001-	
3-1		0497 035 00	* Screw, Drive	4		WQ010001-	d=3
4		D408 324 00	* Decal (Oil)	1		WQ010001-	
5		D406 490 00	* Decal (Oil Check)	1		WQ010001-	
6		D408 313 00	* Decal (Lub. Chart)	1		WQ010001-	
7		4447 479 00	* Decal (Oil)	1		WQ010001-	
8		D407 873 00	* Decal (Engine Daily Check)	1		WQ010001-	
9		D406 597 00	* Decal (Safety Works)	1		WQ010001-	
10		D408 328 00	* Decal (Tank Decompression)	1		WQ010001-	
11		D405 450 00	* Decal (Safety Swing)	1		WQ010001-	
12		D405 454 00	* Decal (Caution)	2		WQ010001-***	
12		D405 667 00	* Decal (Caution)	2	○	***-	
13		D405 455 00	* Decal (Caution)	2		WQ010001-	
14		D405 424 00	* Decal (Caution)	1		WQ010001-	
15		D405 452 00	* Decal (Caution)	1		WQ010001-	
16		D405 332 00	* Decal (Caution)	1		WQ010001-	
17		D405 462 00	* Decal (Caution)	1		WQ010001-	
18		D405 451 00	* Decal (Caution)	1		WQ010001-	
19		D405 463 00	* Decal (Caution)	1		WQ010001-	
20		D405 449 00	* Decal (Caution)	1		WQ010001-	
21		D405 373 00	* Decal (Caution)	1		WQ010001-	
22		4407 035 00	* Decal (Anti-Freezing Solution)	1		WQ010001-***	
22		D408 653 00	* Decal (Anti-Freezing Solution)	1	○	***-	
23		D406 631 00	* Decal (Environment)	1		WQ010001-	
24		D408 371 00	* Decal (Reflector)	2		WQ010001-	
25		D407 943 00	* Decal (EPA Regulation)	1		WQ010001-	
26		D405 453 00	* Decal (Caution)	1		WQ010001-	
27		D408 402 00	* Decal (IHI)	3		WQ010001-	
28		D408 403 00	* Decal (IHI)	1		WQ010001-	
29		D406 630 00	* Decal (Blade, Pedal)	1		WQ010001-	
30		D406 622 00	* Decal (Control A)	1		WQ010001-	
30-1		D406 623 00	* Decal (Control B)	1		WQ010001-	
30-2		D406 624 00	* Decal (Control C)	1		WQ010001-	
30-3		D406 625 00	* Decal (Control D)	1		WQ010001-	
30-4		D406 627 00	* Decal (Control G)	1		WQ010001-	
31		D406 628 00	* Decal (Control A-D)	1		WQ010001-	
32		D406 629 00	* Decal (Control A, B, G)	1		WQ010001-	
● 33		D408 314 00	* Decal (Specification)	1		WQ010001-WQ020000	
● 33		D408 738 00	* Decal (Specification)	1		WQ020001-	
34		D408 224 00	* Decal (Bucket Specification)	1		WQ010001-	
35		4447 874 00	* Decal (Spare Piping Change)	1		WQ010001-	
36		4447 653 00	* Decal (Breaker Cation)	1		WQ010001-	
37		D407 056 00	* Decal (Spare Pedal)	1		WQ010001-	

https://truckmanualshub.com/

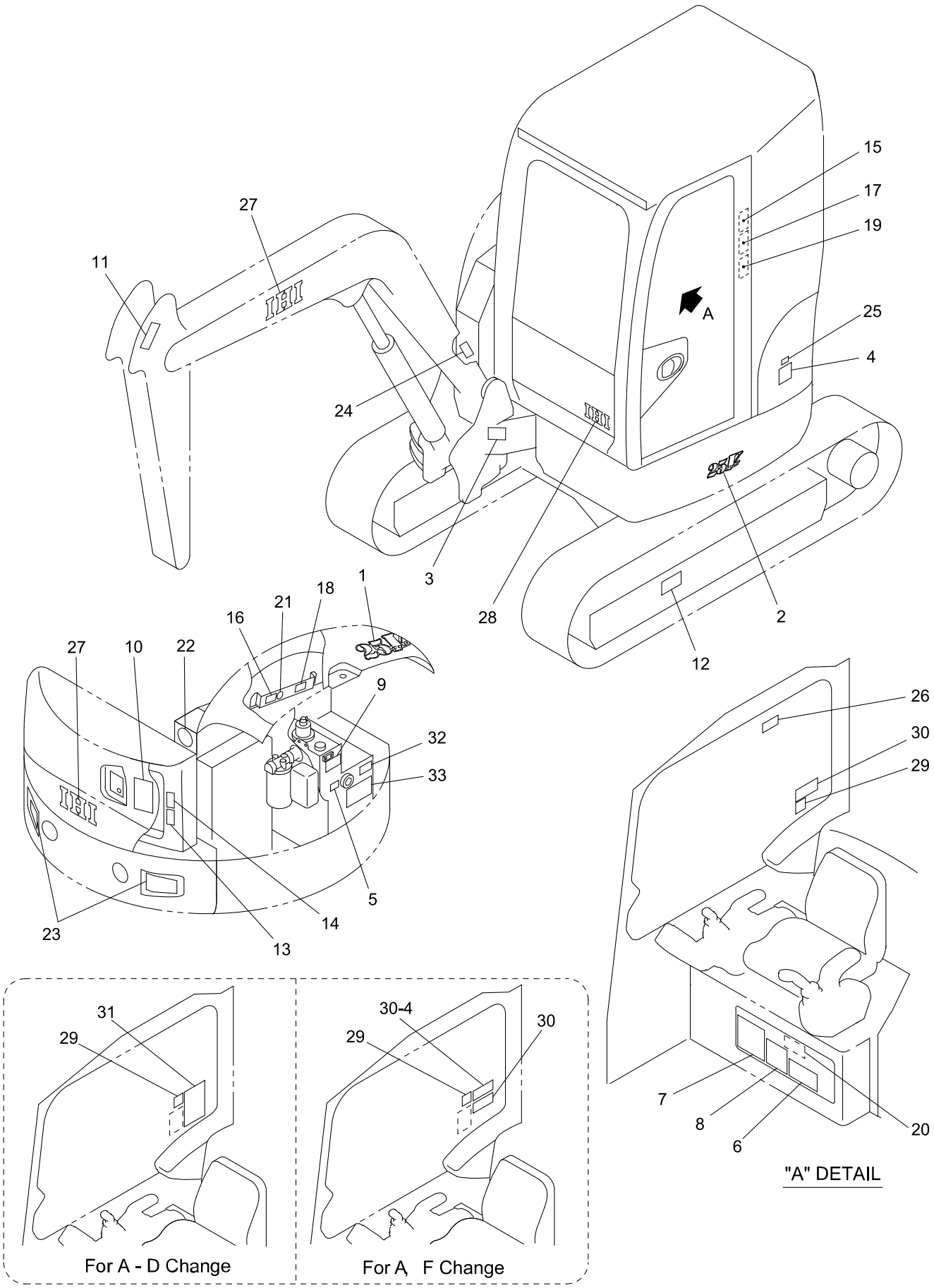

25V4-15100A-1

https://truckmanualshub.com/

KEY No.	SUP.	PART No.	DESCRIPTION	Q'TY	CHAN.	SERIAL No.	REMARKS
0	×	F377 840 00	Decal Ass'y	1		WQ010001-	
0-1	×	F377 855 00	Decal Ass'y	1		WQ010001-	
1		D408 410 00	* Decal (Model)	1		WQ010001-	
2		D408 419 00	* Decal (Model)	1		WQ010001-	
3	×	D405 094 00	* Decal (Serial No.)	1		WQ010001-	
3-1		0497 035 00	* Screw, Drive	4		WQ010001-	d=3
4		4407 974 00	* Decal (Oil)	1		WQ010001-	
5		D406 504 00	* Decal (Oil Check)	1		WQ010001-	
6		D408 355 00	* Decal (Lub. Chart)	1		WQ010001-	
7		D407 886 00	* Decal (Engine Daily Check)	1		WQ010001-	
8		4406 458 00	* Decal (Safety Works)	1		WQ010001-	
9		D408 424 00	* Decal (Tank Decompression)	1		WQ010001-	
10		D405 507 00	* Decal (Safety Swing)	1		WQ010001-	
● 11		D405 511 00	* Decal (Caution)	2		WQ010001-***	
● 11		D405 668 00	* Decal (Caution)	2	○	***-	
12		D405 505 00	* Decal (Caution)	2		WQ010001-	
13		D405 366 00	* Decal (Caution)	1		WQ010001-	
14		D405 509 00	* Decal (Caution)	1		WQ010001-	
15		D405 359 00	* Decal (Caution)	1		WQ010001-	
16		D405 503 00	* Decal (Caution)	1		WQ010001-	
17		D405 508 00	* Decal (Caution)	1		WQ010001-	
18		D405 504 00	* Decal (Caution)	1		WQ010001-	
19		D405 506 00	* Decal (Caution)	1		WQ010001-	
20		D405 323 00	* Decal (Caution)	1		WQ010001-	
● 21		4407 035 00	* Decal (Anti-Freezing Solution)	1		WQ010001-***	
● 21		D408 653 00	* Decal (Anti-Freezing Solution)	1	○	***-	
22		D406 783 00	* Decal (Environment)	1		WQ010001-	
23		D408 371 00	* Decal (Reflector)	2		WQ010001-	
24	×	D405 097 00	* Decal (New Machine)	1		WQ010001-	
25		D407 943 00	* Decal (EPA Regulation)	1		WQ010001-	
26		D405 510 00	* Decal (Caution)	1		WQ010001-	
27		D408 402 00	* Decal (IHI)	3		WQ010001-	
28		D408 403 00	* Decal (IHI)	1		WQ010001-	
29		D406 630 00	* Decal (Blade, Pedal)	1		WQ010001-	
30		D406 622 00	* Decal (Control A)	1		WQ010001-	
30-1		D406 623 00	* Decal (Control B)	1		WQ010001-	
30-2		D406 624 00	* Decal (Control C)	1		WQ010001-	
30-3		D406 625 00	* Decal (Control D)	1		WQ010001-	
30-4		D406 626 00	* Decal (Control F)	1		WQ010001-	
31		D406 628 00	* Decal (Control A-D)	1		WQ010001-	
32		4448 651 00	* Decal (Spare Piping Change)	1		WQ010001-	
33		4447 857 00	* Decal (Breaker Cation)	1		WQ010001-	

https://truckmanualshub.com/

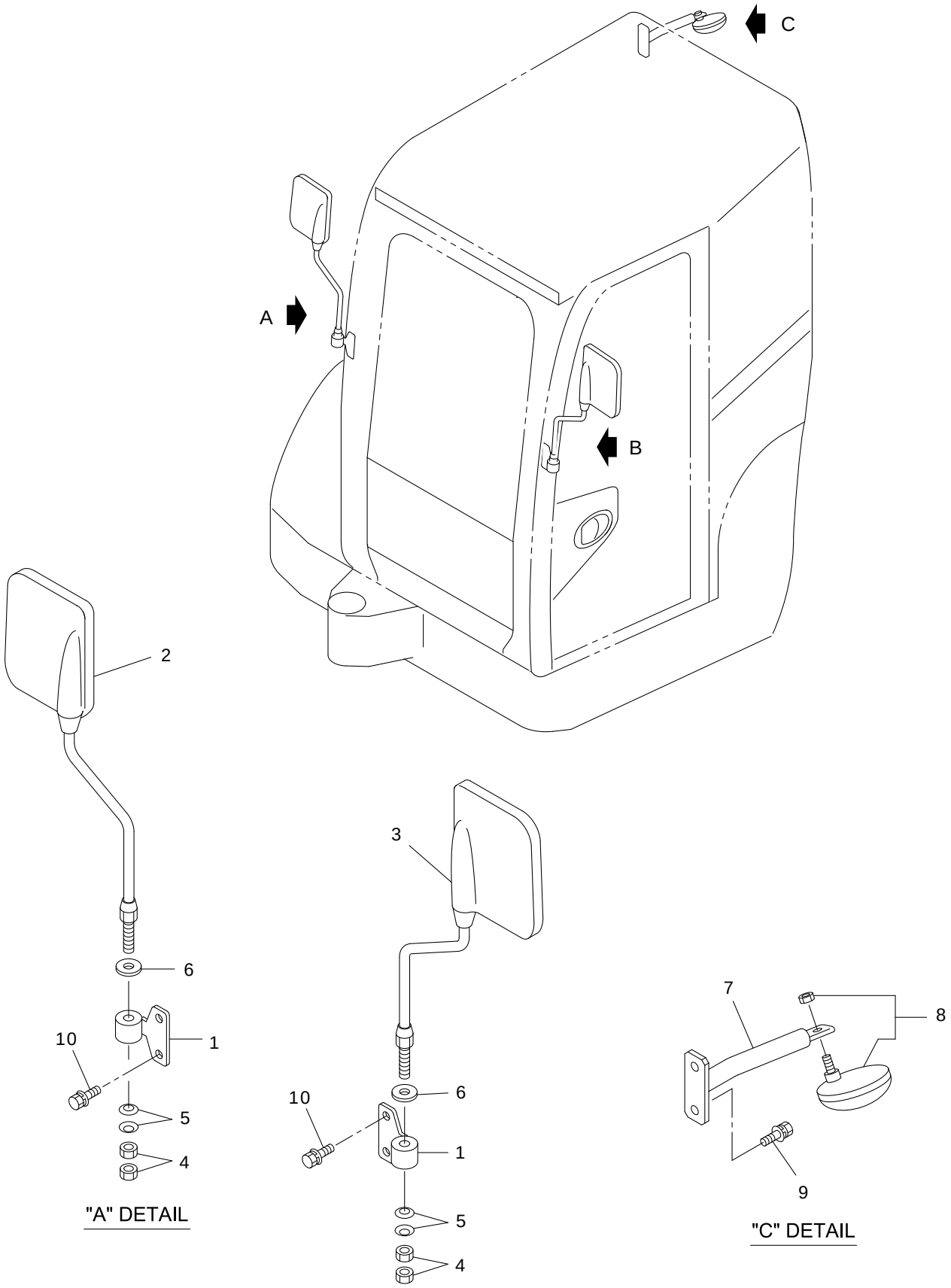

V4ALL-151100-1

https://truckmanualshub.com/

KEY No.	SUP.	PART No.	DESCRIPTION	Q'TY	CHAN.	SERIAL No.	REMARKS
0	×	F355 037 00	Mirror Ass'y	1		WQ010001-	
1		D416 701 00	* Bracket	2		WQ010001-	
2		0699 901 12	* Mirror, Back	1		WQ010001-	
3		0699 901 13	* Mirror, Back	1		WQ010001-	
4		0580 120 00	* Nut, Hex.	4		WQ010001-	M12
5		0491 800 12	* Washer, Conical Spring	4		WQ010001-	M12
6		0593 120 00	* Washer, Flat	2		WQ010001-	M12
7		D260 381 00	* Stay	1		WQ010001-	
8		0690 203 08	* Mirror, Under	1		WQ010001-	
9		0439 100 25	* Bolt, Treatment (W/L.W,F.W)	2		WQ010001-	M10X25 P=1.25
10		0439 100 20	* Bolt, Treatment (W/L.W,F.W)	4		WQ010001-	M10X20 P=1.25

https://truckmanualshub.com/

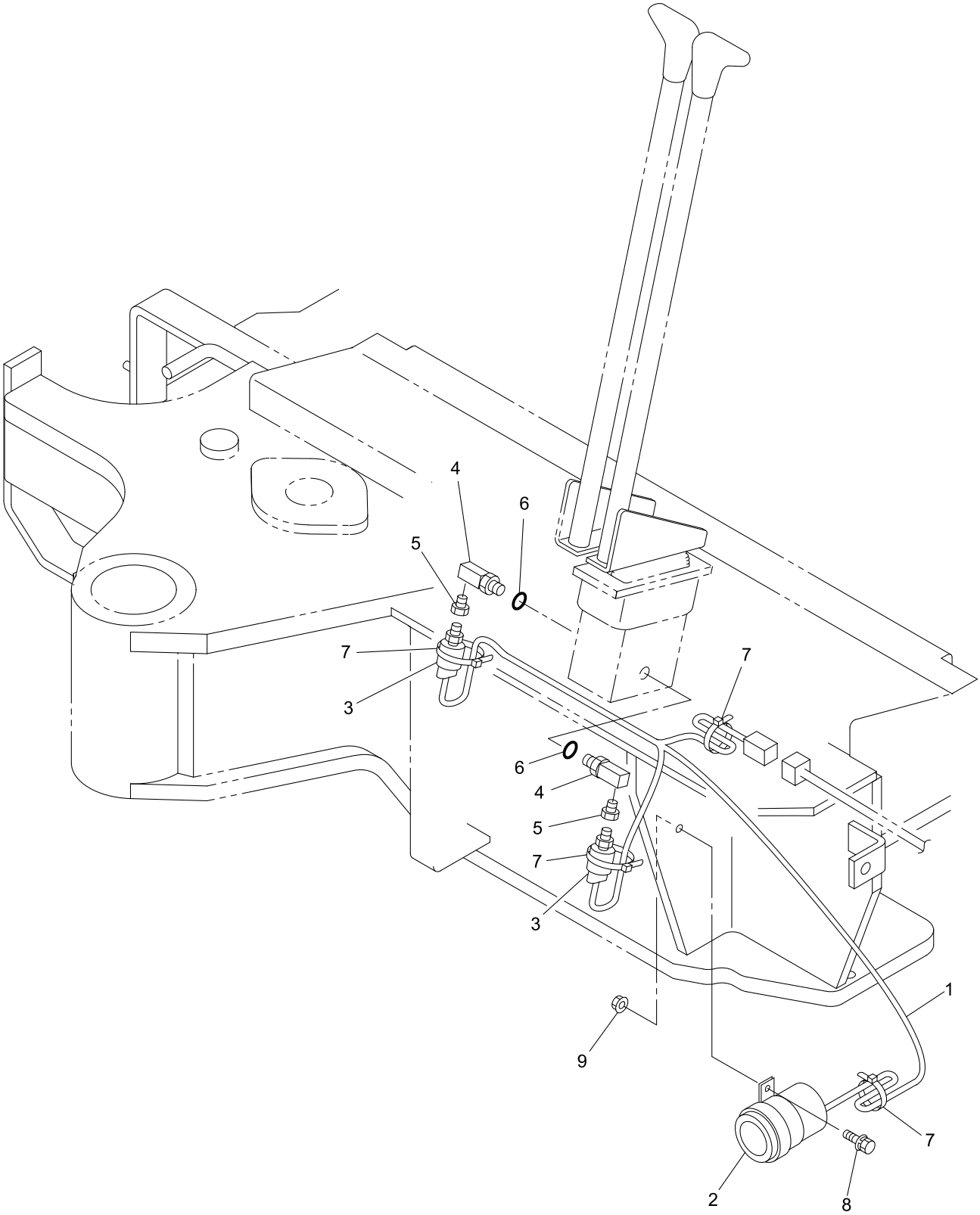

25V4-151200-1

https://truckmanualshub.com/

KEY No.	SUP.	PART No.	DESCRIPTION	Q'TY	CHAN.	SERIAL No.	REMARKS
● 0	×	F432 331 00	Alarm Device, Travel	1		WQ010001-	
● 1		D592 161 00	* Harness	1		WQ010001-***	
● 1		D592 518 00	* Harness	1	○	***-	
2		0857 011 48	* Horn, Back	1		WQ010001-	
3		0858 180 10	* Switch, Pressure	2		WQ010001-	
4		0719 804 UA	* Elbow	2		WQ010001-	
5		0710 400 24	* Bush, Reducer	2		WQ010001-	PT1/4XPT1/8
6		0760 710 12	* Ring, O	2		WQ010001-	P11-90B
7		0820 067 04	* Band, Cable	4		WQ010001-	
8		0517 080 30	* Bolt, Treatment (W/L.W, F.W)	1		WQ010001-	M8X30
9		0521 080 00	* Nut, Hex. (W/F.W)	1		WQ010001-	M8

15

https://truckmanualshub.com/

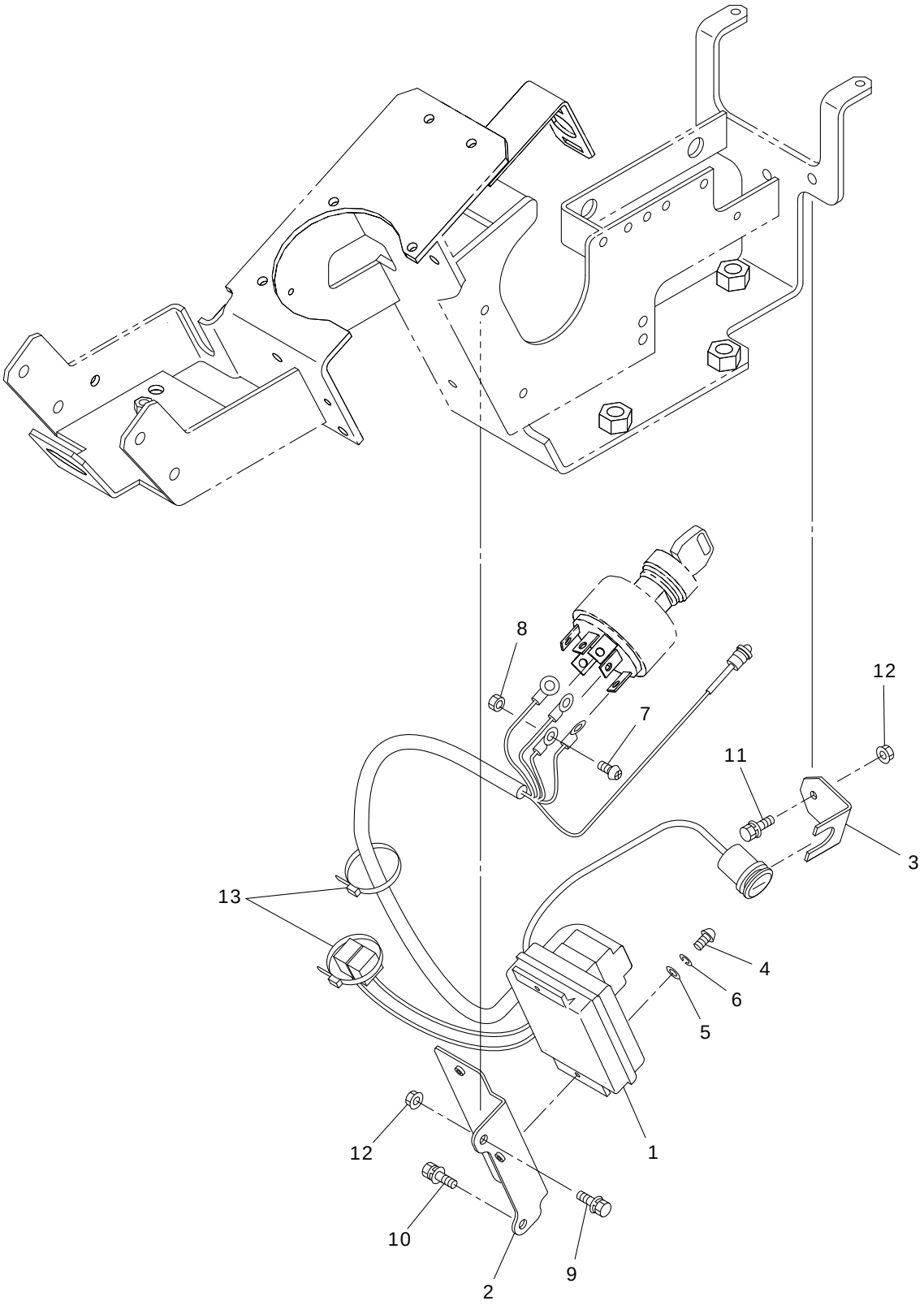

V4ALL-151300-1

https://truckmanualshub.com/

KEY No.	SUP.	PART No.	DESCRIPTION	Q'TY	CHAN.	SERIAL No.	REMARKS
0	×	F366 792 00	Immobilizer Ass'y	1		WQ010001-	
1		0893 508 UA	* Controller Ass'y	1		WQ010001-	
2		D418 688 00	* Bracket	1		WQ010001-	
3		D418 689 00	* Bracket	1		WQ010001-	
4		0565 040 10	* Screw, Pan Head	2		WQ010001-	M4X10
5		0593 040 00	* Washer, Flat	2		WQ010001-	M4
6		0590 040 00	* Washer, Lock	2		WQ010001-	M4
7		0565 050 10	* Screw, Pan Head	1		WQ010001-	M5X10
8		0580 050 00	* Nut, Hex.	1		WQ010001-	M5
9		0517 060 25	* Bolt, Treatment (W/L.W, F.W)	1		WQ010001-	M6X25
10		0517 060 12	* Bolt, Treatment (W/L.W, F.W)	1		WQ010001-	M6X12
11		0517 060 16	* Bolt, Treatment (W/L.W, F.W)	1		WQ010001-	M6X16
12		0521 060 00	* Nut, Hex. (W/F.W)	2		WQ010001-	M6
13		0820 067 03	* Band, Cable	2		WQ010001-	

https://truckmanualshub.com/

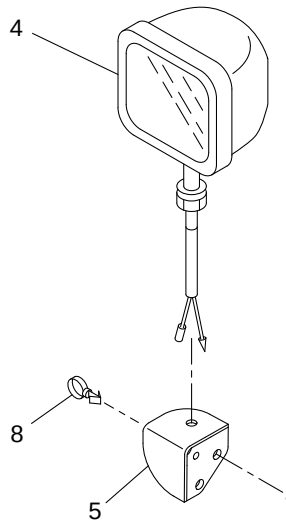

"A" DETAIL

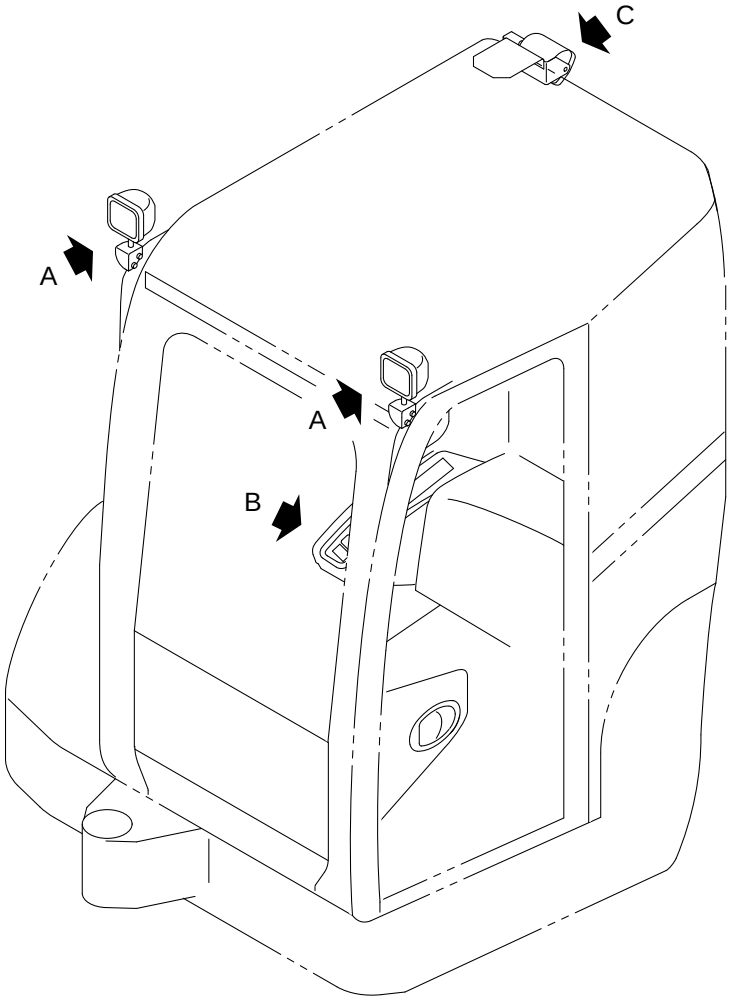

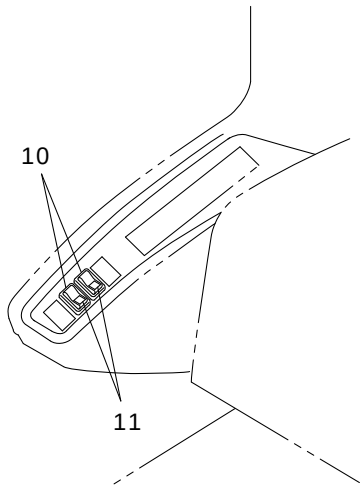

"B" DETAIL

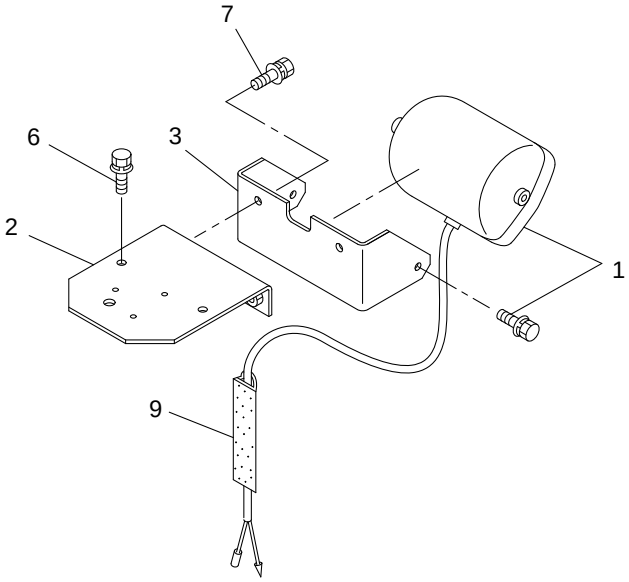

"C" DETAIL

V4ALL-151400-1

https://truckmanualshub.com/

KEY No.	SUP.	PART No.	DESCRIPTION	Q'TY	CHAN.	SERIAL No.	REMARKS
0	×	F385 402 00	Light Ass'y	1		WQ010001-	
1		0854 536 UA	* Lamp Ass'y	1		WQ010001-	
1-1		0854 536 01	** Lens	1		WQ010001-	
1-2		0854 536 11	** Bulb	1		WQ010001-	
2		D418 632 00	* Bracket	1		WQ010001-	
3		D418 630 00	* Bracket	1		WQ010001-	
4		0854 523 UA	* Light Ass'y	2		WQ010001-	
4-1		0854 523 01	** Lens	1		WQ010001-	
4-2		0854 523 06	** Bulb	1		WQ010001-	
5		D419 161 00	* Bracket	2		WQ010001-	
6		0439 100 20	* Bolt, Treatment (W/L.W, F.W)	2		WQ010001-	M10X20 P=1.25
7		0439 100 25	* Bolt, Treatment (W/L.W, F.W)	6		WQ010001-	M10X25 P=1.25
8		0690 082 08	* Clamp, Hose	2		WQ010001-	
9		4522 707 01	* Duct	1		WQ010001-	
10		0858 314 11	* Switch Ass'y, Light	2		WQ010001-	
11		0858 314 12	* Decal	2		WQ010001-	

https://truckmanualshub.com/

[Memo]

IHI

https://truckmanualshub.com/

部品番号順索引
PARTS INDEX

PARTS No.	Sh No.	KEY No.	PARTS No.	Sh No.	KEY No.	PARTS No.	Sh No.	KEY No.
**** *** **	1-1	0	0494 651 70	1-4	1	0517 060 20	9-1[A]	43
**** *** **	5-2	42	0494 808 15	5-2	32	0517 060 20	9-2	33
**** *** **	5-3	6	0497 035 00	8-7	3-1	0517 060 25	4-4	5
**** *** **	5-4	32	0497 035 00	8-7[A]	3-1	0517 060 25	4-4[A]	5
**** *** **	5-8	24	0497 035 00	15-10	3-1	0517 060 25	4-4[B]	5
**** *** **	5-9	18	0497 035 00	15-10[A]	3-1	0517 060 25	15-13	9
**** *** **	5-10	18	0513 050 10	6-4	3	0517 060 50	9-1[A]	48
**** *** **	5-11	17	0513 080 60	6-4[A]	19	0517 060 60	4-4[B]	73
**** *** **	5-12	18	0513 080 90	15-3	25	0517 080 12	1-1	4
**** *** **	5-14	20	0513 100 16	4-1	35	0517 080 12	7-1	63
0322 108 99	7-2	15	0513 100 16	11-4	16	0517 080 12	7-1[A]	53
0322 108 99	7-2[A]	15	0513 100 20	5-6	12	0517 080 12	9-1	27
0438 060 16	15-9	12	0513 100 25	7-3	6	0517 080 12	9-1[A]	26
0439 100 20	8-5	6	0513 100 25	7-3[A]	6	0517 080 16	6-1	17
0439 100 20	15-11	10	0513 100 30	11-3	9	0517 080 16	6-3	21
0439 100 20	15-14	6	0513 100 35	1-3	22	0517 080 16	7-1	67
0439 100 25	8-4	3	0513 100 40	7-3[A]	11	0517 080 16	7-1[A]	66
0439 100 25	8-4[A]	6	0513 120 25	11-4	31	0517 080 16	7-2[A]	31
0439 100 25	15-11	9	0513 120 30	2-1	17	0517 080 16	8-1	11
0439 100 25	15-14	7	0513 120 35	7-3	7	0517 080 16	9-1	4
0454 400 20	9-2	8	0513 120 35	7-3[A]	7	0517 080 16	9-1[A]	25
0457 100 30	1-1	13	0513 121 00	7-1	17	0517 080 16	15-1	57
0480 100 20	8-1	33	0513 121 00	7-1[A]	17	0517 080 16	15-2	15
0491 800 12	15-11	5	0514 100 25	1-7	14	0517 080 20	2-1	24
0493 500 28	5-2	22	0514 100 45	7-2[A]	26	0517 080 20	4-1	19
0493 500 34	5-7	2	0514 120 80	11-1	46	0517 080 20	4-4	43
0493 500 62	1-5	3	0514 121 10	11-1	30	0517 080 20	4-4[A]	43
0493 500 80	1-4	5	0517 060 10	7-1	22	0517 080 20	4-4[B]	43
0493 510 08	6-1	26	0517 060 10	7-1[A]	22	0517 080 20	6-2	25
0493 510 16	6-2	24	0517 060 12	6-2	27	0517 080 20	6-3	15
0493 510 25	1-6	5	0517 060 12	7-4[A]	39	0517 080 20	6-4	4
0493 510 30	5-15[B]	11	0517 060 12	9-2	28	0517 080 20	7-1	66
0493 510 55	5-3	3	0517 060 12	15-13	10	0517 080 20	7-1	66
0493 560 09	6-2	22	0517 060 16	5-6	11	0517 080 20	7-1[A]	81
0494 606 08	7-3	4	0517 060 16	6-2	26	0517 080 20	7-1[A]	81
0494 606 08	7-3[A]	4	0517 060 16	6-4[A]	18	0517 080 20	7-2	17
0494 606 12	5-15[B]	12	0517 060 16	7-1	57	0517 080 20	7-2[A]	17
0494 606 16	6-4[A]	6	0517 060 16	7-1[A]	82	0517 080 20	8-2	29
0494 606 25	5-15	11	0517 060 16	9-1	28	0517 080 20	15-1	58
0494 606 25	5-15[A]	11	0517 060 16	9-1[A]	27	0517 080 25	6-1	21
0494 608 10	1-5	8	0517 060 16	9-2	21	0517 080 25	7-2	22
0494 608 12	5-2	6	0517 060 16	15-9	12	0517 080 25	7-2[A]	23
0494 608 40	6-2	50	0517 060 16	15-9[A]	12	0517 080 25	7-4[A]	40
0494 610 24	5-15	12	0517 060 16	15-13	11	0517 080 25	8-2	50
0494 610 24	5-15[A]	12	0517 060 20	9-1	45	0517 080 25	15-1	32

https://truckmanualshub.com/

部品番号順索引

PARTS INDEX

PARTS No.	Sh No.	KEY No.	PARTS No.	Sh No.	KEY No.	PARTS No.	Sh No.	KEY No.
0517 080 30	8-1	12	0518 100 25	15-1	16	0524 100 00	15-4	8
0517 080 30	8-2	19	0518 100 25	15-3	14	0528 050 16	6-4[A]	4
0517 080 30	15-12	8	0518 100 30	4-3	32	0535 100 00	7-2[A]	28
0517 080 35	7-2[A]	32	0518 100 30	6-4	13	0535 120 00	11-1	47
0517 080 35	8-1	13	0518 100 30	15-1	33	0541 120 16	9-1	24
0517 080 35	8-2	20	0518 100 40	15-1	17	0544 060 00	9-1	10
0517 080 40	8-2	21	0518 100 40	15-2	9	0544 060 00	9-1[A]	10
0517 080 60	4-3	16	0518 100 40	15-3	15	0544 080 00	15-1	59
0517 081 15	9-2	5	0518 100 45	15-1	18	0545 100 00	4-4	74
0517 100 35	7-2[A]	33	0518 100 45	15-3	16	0545 100 00	4-4[A]	74
0518 100 16	7-4[A]	41	0518 100 60	15-1	47	0545 100 00	4-4[B]	77
0518 100 16	9-1	25	0518 100 60	15-3	40	0548 120 00	6-2	30
0518 100 16	9-1[A]	24	0518 120 25	5-6	14	0549 140 00	6-1	18
0518 100 20	1-1	7	0519 080 20	6-2	45	0550 080 20	8-5	4
0518 100 20	4-1	36	0519 080 25	8-4[A]	9	0550 080 70	7-4	34
0518 100 20	4-3	22	0519 080 30	5-3	1	0550 080 70	7-4[A]	35
0518 100 20	4-4	49	0520 100 20	11-4	17	0550 100 20	8-1	20
0518 100 20	6-1	29	0520 100 25	8-2	52	0550 100 20	8-2	34
0518 100 20	7-2	9	0520 100 35	11-4	18	0550 100 25	8-2	8
0518 100 20	7-2[A]	9	0520 100 65	15-2	8	0550 120 25	4-4[A]	66
0518 100 20	7-4	39	0520 100 65	15-3	13	0551 080 60	7-4	15
0518 100 20	7-4[A]	16	0521 060 00	7-4	38	0551 080 60	7-4[A]	15
0518 100 20	8-1	27	0521 060 00	9-1	9	0552 080 20	9-1	2-3
0518 100 20	8-2	11	0521 060 00	9-1[A]	9	0552 080 20	9-1[A]	2-3
0518 100 20	8-5	6	0521 060 00	15-13	12	0555 100 40	15-5	5
0518 100 20	9-2	44	0521 080 00	6-2	47	0555 120 20	11-1	28
0518 100 20	12-1	1	0521 080 00	6-4[A]	25	0555 120 25	8-4	7
0518 100 20	15-1	19	0521 080 00	7-4	14	0555 120 25	8-4[A]	13
0518 100 20	15-3	17	0521 080 00	7-4[A]	14	0555 120 25	11-1	34
0518 100 20	15-4	7	0521 080 00	8-2	22	0555 120 30	11-2	9
0518 100 20	15-9	11	0521 080 00	8-5	5	0555 120 35	1-1	23
0518 100 20	15-9[A]	11	0521 080 00	9-1	2-4	0555 120 35	3-1	2
0518 100 25	4-4	65	0521 080 00	9-1[A]	2-4	0555 120 35	11-2	17
0518 100 25	4-4[A]	65	0521 080 00	15-12	9	0555 120 40	8-4	4
0518 100 25	4-4[B]	65	0521 100 00	6-4	14	0555 120 40	8-4[A]	7
0518 100 25	6-1	10	0524 100 00	4-1	20	0555 120 60	2-1	18
0518 100 25	6-2	1	0524 100 00	4-4	44	0555 120 70	2-1	19
0518 100 25	6-3	20	0524 100 00	4-4[A]	44	0555 140 40	0-0	20
0518 100 25	6-4[A]	23	0524 100 00	4-4[B]	44	0555 140 40	1-7	4
0518 100 25	7-1	19	0524 100 00	7-1[A]	52	0555 140 40	11-3	14
0518 100 25	7-1[A]	19	0524 100 00	7-4	37	0555 160 30	1-1	18
0518 100 25	7-4[A]	42	0524 100 00	7-4[A]	38	0555 160 30	1-5	9
0518 100 25	8-1	19	0524 100 00	9-1	35	0555 160 30	12-1	7
0518 100 25	8-2	6	0524 100 00	9-1[A]	32	0555 160 35	11-1	25
0518 100 25	9-2	12	0524 100 00	15-2	17	0555 160 50	8-4	2

https://truckmanualshub.com/

部品番号順索引

PARTS INDEX

PARTS No.	Sh No.	KEY No.	PARTS No.	Sh No.	KEY No.	PARTS No.	Sh No.	KEY No.
0555 160 50	8-4[A]	5	0580 080 00	6-4	11	0593 080 00	7-2[A]	37
0555 160 50	15-5	7	0580 080 00	7-2	10	0593 080 00	7-4	35
0555 160 65	1-1	16	0580 080 00	7-2[A]	36	0593 080 00	7-4[A]	36
0555 160 70	8-6	2	0580 120 00	15-11	4	0593 080 00	8-2	26
0558 100 25	7-1[A]	18	0580 140 00	6-2	36	0593 080 00	15-1	60
0558 120 30	7-1	18	0580 160 00	1-3	15	0593 080 00	15-3	27
0561 060 06	5-10	21	0581 080 00	7-2[A]	34	0593 080 00	15-9	25
0561 060 06	5-11	20	0585 140 00	0-0	21	0593 080 00	15-9[A]	23
0561 080 08	5-8	27	0585 140 00	11-3	3	0593 100 00	8-1	22
0561 080 08	5-9	21	0585 200 00	15-5	3	0593 100 00	8-2	10
0561 100 10	5-12	21	0587 300 00	11-1	27	0593 100 00	11-4	24
0561 100 10	5-15	10	0590 040 00	6-4[A]	14	0593 120 00	4-4[A]	67
0561 100 10	5-15[A]	10	0590 040 00	15-13	6	0593 120 00	15-11	6
0562 050 14	5-15[B]	3	0590 050 00	5-15[B]	2	0594 060 00	6-2	7
0562 050 18	5-4	58	0590 050 00	7-4	22	0594 060 00	8-2	32
0562 050 18	5-4	58	0590 050 00	7-4[A]	22	0594 060 00	9-2	10
0562 060 25	5-1	67	0590 060 00	6-2	10	0595 080 00	7-2	11
0562 060 50	5-13	19	0590 060 00	6-4[A]	16	0595 080 00	7-2[A]	11
0562 060 60	5-4	48	0590 080 00	7-2	19	0595 100 00	1-1	10
0562 080 16	5-14	10	0590 080 00	7-2[A]	19	0595 100 00	1-3	21
0562 080 16	5-15	8	0590 080 00	7-4	36	0595 100 00	1-7	13
0562 080 16	5-15[A]	8	0590 080 00	7-4[A]	37	0595 100 00	4-1	37
0562 080 20	5-1	61	0590 080 00	15-3	26	0595 100 00	7-3[A]	12
0562 080 25	5-15	9	0590 100 00	5-6	15	0595 100 00	15-5	6
0562 080 25	5-15[A]	9	0590 100 00	7-2[A]	27	0595 120 00	1-1	22
0562 080 35	5-2	45	0590 100 00	7-3	8	0595 120 00	2-1	20
0562 100 25	4-1	18	0590 100 00	7-3[A]	8	0595 120 00	3-1	3
0562 100 30	1-1	9	0590 100 00	8-1	21	0595 120 00	7-1	20
0562 100 30	7-3	5	0590 100 00	8-2	9	0595 120 00	7-1[A]	20
0562 100 30	7-3[A]	5	0590 100 00	11-3	10	0595 120 00	7-3	9
0562 100 35	5-2	28	0590 100 00	11-4	21	0595 120 00	7-3[A]	9
0562 120 35	3-1	2	0590 120 00	2-1	21	0595 120 00	8-4	6
0563 100 30	7-3[A]	5-1	0590 120 00	4-4[A]	68	0595 120 00	8-4[A]	14
0565 040 08	6-3	17	0590 120 00	9-1	26	0595 120 00	11-4	32
0565 040 10	15-13	4	0590 120 00	11-1	40	0595 140 00	1-7	5
0565 040 12	6-2	37	0591 080 00	15-1	56	0595 160 00	1-1	17
0565 040 20	6-4[A]	12	0593 040 00	6-4[A]	13	0595 160 00	1-5	10
0565 050 10	15-13	7	0593 040 00	9-2	9	0595 160 00	8-4	5
0565 060 25	6-2	6	0593 040 00	15-13	5	0595 160 00	8-4[A]	8
0567 040 08	5-14	5	0593 060 00	6-2	9	0595 160 00	8-6	3
0580 050 00	7-4	21	0593 060 00	6-4	7	0595 160 00	15-5	8
0580 050 00	7-4[A]	21	0593 060 00	6-4[A]	8	0595 200 00	15-5	4
0580 050 00	15-13	8	0593 060 00	8-1	15	0596 060 00	6-2	8
0580 060 00	6-4[A]	17	0593 080 00	6-2	28	0596 060 00	8-2	33
0580 080 00	5-4	2	0593 080 00	6-4[A]	20	0596 060 00	9-2	11

https://truckmanualshub.com/

部品番号順索引

PARTS INDEX

PARTS No.	Sh No.	KEY No.	PARTS No.	Sh No.	KEY No.	PARTS No.	Sh No.	KEY No.
0599 010 15	6-4	8	0655 563 03	8-5	2-3	0690 081 92	9-1[A]	16
0599 010 15	6-4[A]	9	0655 563 04	8-5	2-4	0690 082 02	9-1	33
0599 010 15	8-1	9	0655 563 05	8-5	2-5	0690 082 02	9-1[A]	30
0599 060 50	11-1	26	0655 563 10	8-5	2-6	0690 082 03	9-1	17
0605 428 UA	2-1	14	0655 563 UA	8-5	2	0690 082 03	9-1[A]	17
0609 010 10	5-1	6	0655 564 UA	8-5	10	0690 082 05	9-1	41
0609 010 10	5-10	22	0655 567 UA	8-5	8	0690 082 05	9-1[A]	39
0609 010 10	5-11	21	0655 568 01	8-5	9-2	0690 082 06	9-1	37
0609 016 10	5-12	22	0655 568 UA	8-5	9	0690 082 06	9-1[A]	34
0609 016 10	5-13	3	0655 569 01	8-5	9-3	0690 082 08	6-2	55
0618 116 15	6-2	18	0655 569 02	8-5	9-4	0690 082 08	6-2	55
0618 120 20	6-2	17	0655 569 UA	8-5	9-1	0690 082 08	7-4	46
0630 620 10	5-2	7	0657 005 UA	7-3[A]	3	0690 082 08	9-1	18
0630 620 44	5-2	30	0659 000 74	6-4	12	0690 082 08	9-1[A]	18
0630 620 50	1-6	3	0661 800 28	7-2	20	0690 082 08	15-14	8
0630 620 60	1-5	4	0661 800 28	7-2[A]	21	0690 083 05	15-9	10
0630 630 70	1-4	6	0662 142 UA	7-2[A]	20	0690 083 05	15-9[A]	10
0650 001 16	11-3	2	0667 800 UA	7-1	44	0690 083 06	4-1	17
0650 002 04	0-0	15	0667 800 UA	7-1[A]	55	0690 083 08	7-1	55
0650 002 04	11-3	8	0668 248 02	7-1	43-1	0690 083 08	7-1	55
0650 003 03	0-0	16	0668 248 02	7-1[A]	54-1	0690 083 08	7-1[A]	15
0650 003 03	11-3	7	0668 248 UA	7-1	43	0690 083 10	4-1	13
0650 004 02	0-0	17	0668 248 UA	7-1[A]	54	0690 083 12	7-2	8
0650 004 02	11-3	6	0668 249 UA	7-1	59	0690 083 12	7-2[A]	8
0651 499 UA	7-3	3	0668 249 UA	7-1[A]	69	0690 083 12	7-4	5
0651 499 UA	7-3[A]	3	0668 400 36	7-1	64	0690 083 12	7-4[A]	5
0651 911 01	1-6	4	0668 400 36	7-1[A]	79	0690 083 14	7-4	6
0651 911 02	1-6	1	0668 400 37	7-1	65	0690 083 14	7-4[A]	6
0651 911 04	1-6	6	0668 400 37	7-1[A]	80	0690 089 19	7-2	12
0651 911 UA	1-1	14	0668 502 19	7-1	3	0690 089 19	7-2[A]	12
0651 911 UA	1-6	0	0668 502 19	7-1[A]	3	0690 201 05	6-1	20
0652 253 UA	6-2	20	0668 616 UA	7-1[A]	50	0690 201 05	9-1	20
0652 271 UA	8-2	13	0676 254 UA	7-1	1	0690 201 05	9-1[A]	20
0652 755 UA	11-3	16	0676 269 UA	7-1[A]	1	0690 201 08	8-2	7
0653 934 02	1-2	4	0690 016 19	8-1	7	0690 201 08	8-4	10
0653 934 03	1-2	6	0690 016 19	8-2	17	0690 201 08	8-4[A]	11
0653 934 04	1-2	7	0690 081 56	7-1	28	0690 201 08	11-4	19
0653 934 05	1-2	5	0690 081 56	7-1[A]	28	0690 201 09	1-1	5
0654 102 UA	1-1	1	0690 081 89	9-1	36	0690 201 09	8-5	7
0654 120 91	1-2	1	0690 081 89	9-1[A]	33	0690 201 09	11-4	20
0654 120 92	1-2	3	0690 081 90	7-4	32	0690 202 50	6-2	29
0654 120 UA	1-1	1-1	0690 081 90	7-4[A]	34	0690 203 08	15-11	8
0654 120 UA	1-2	0	0690 081 91	7-1	27	0690 203 15	15-5	1
0655 563 01	8-5	2-1	0690 081 91	7-1[A]	27	0690 203 44	9-2	16
0655 563 02	8-5	2-2	0690 081 92	9-1	16	0690 211 08	8-2	36

https://truckmanualshub.com/

部品番号順索引

PARTS INDEX

PARTS No.	Sh No.	KEY No.	PARTS No.	Sh No.	KEY No.	PARTS No.	Sh No.	KEY No.
0690 220 91	8-1	8	0710 122 09	4-4[A]	76	0711 402 02	1-7	16
0690 220 91	8-2	18	0710 122 09	4-4[B]	76	0712 310 32	15-1	45
0690 220 92	8-2	37	0710 122 09	4-4[B]	76	0712 310 32	15-3	36
0690 270 29	9-2	24-2	0710 122 09	6-1	8	0712 310 40	4-4	70
0690 283 40	6-2	34	0710 122 09	6-3	9	0712 310 50	4-4[B]	72
0690 283 41	6-2	41	0710 122 09	15-1	41	0712 310 51	7-1[A]	46
0690 283 72	6-1	15	0710 122 09	15-2	22	0712 311 37	15-1	46
0690 283 81	6-3	13	0710 122 09	15-3	24	0712 311 37	15-3	37
0690 283 82	6-2	53	0710 122 10	4-1	23	0712 325 02	4-4	69
0690 283 85	6-2	48	0710 122 10	11-4	23	0712 325 02	4-4[B]	71
0690 283 86	6-2	2	0710 122 10	15-4	3	0712 326 01	4-4[B]	67
0690 511 43	6-4	5	0710 124 01	7-2	18	0713 100 02	11-2	15-1
0690 511 50	6-4[A]	7	0710 124 01	7-2[A]	18	0713 429 04	5-3	2
0699 901 12	15-11	2	0710 127 05	4-1	30	0713 429 13	5-3	12
0699 901 13	15-11	3	0710 200 14	5-3	14	0713 429 91	0-0	23
0710 106 27	11-2	14	0710 201 01	1-4	8	0713 429 91	5-3	7
0710 107 27	11-2	15	0710 201 01	1-5	5	0713 429 UA	1-7	7
0710 113 32	4-3	26	0710 201 01	5-1	7	0713 429 UA	5-3	0
0710 113 32	4-4	38	0710 201 01	5-3	13	0713 700 02	1-7	17
0710 113 32	4-4[A]	38	0710 202 02	4-3	17	0713 700 03	4-2	5
0710 113 32	4-4[B]	38	0710 212 04	5-6	19	0713 700 03	4-4	40
0710 113 32	12-2	8	0710 212 04	6-1	30	0713 700 03	4-4[A]	40
0710 113 33	4-2	12	0710 303 02	4-4	26	0713 700 03	4-4[B]	40
0710 113 34	4-2	18	0710 303 02	4-4[A]	26	0713 700 03	11-4	14
0710 113 34	4-3	28	0710 303 02	4-4[B]	26	0713 700 03	12-2	10
0710 113 43	7-1[A]	43	0710 303 02	15-2	7	0713 700 70	4-3	29
0710 113 44	4-3	27	0710 303 02	15-3	12	0713 700 70	4-4	2
0710 113 66	4-1	29	0710 303 03	4-4	71	0713 700 70	4-4[A]	77
0710 114 33	11-4	37	0710 303 03	4-4[A]	49	0713 700 70	4-4[A]	77
0710 114 33	12-2	11	0710 303 03	4-4[B]	49	0713 700 70	4-4[B]	2
0710 114 34	1-7	2	0710 303 04	15-1	15	0713 700 70	6-1	7
0710 114 34	4-2	17	0710 303 04	15-3	39	0713 700 70	6-3	8
0710 114 44	15-1	22	0710 303 06	15-1	14	0713 700 70	15-1	23
0710 117 04	12-2	5	0710 303 06	15-3	38	0713 700 70	15-2	21
0710 117 05	4-2	11	0710 400 24	15-12	5	0713 700 70	15-3	23
0710 117 07	4-1	32	0710 503 03	15-9[A]	8	0713 700 71	11-4	38
0710 121 00	4-4	39	0710 707 02	1-7	12	0713 700 72	15-1	38
0710 121 00	4-4[A]	75	0710 709 02	4-4	8	0713 700 77	4-3	25
0710 121 00	4-4[B]	39	0710 709 02	4-4[A]	8	0713 700 93	15-3	29
0710 121 00	6-3	19	0710 709 02	4-4[B]	8	0713 700 94	1-7	19
0710 121 00	15-1	55	0710 709 12	4-1	10	0713 700 94	15-1	39
0710 122 09	4-4	73	0710 713 09	4-4	3	0713 704 03	15-9	8
0710 122 09	4-4	73	0710 713 09	4-4[A]	3	0713 704 03	15-9[A]	24
0710 122 09	4-4[A]	76	0710 713 09	4-4[B]	3	0719 804 UA	1-7	10
0710 122 09	4-4[A]	76	0710 713 11	15-1	21	0719 804 UA	15-12	4

https://truckmanualshub.com/

部品番号順索引

PARTS INDEX

PARTS No.	Sh No.	KEY No.	PARTS No.	Sh No.	KEY No.	PARTS No.	Sh No.	KEY No.
0719 805 UA	4-4	7	0752 686 21	5-10	8	0756 326 10	5-14	4
0719 805 UA	4-4[A]	7	0752 686 21	5-11	7	0756 326 19	5-14	16
0719 805 UA	4-4[B]	7	0752 756 05	5-12	12	0756 326 20	5-14	3
0725 005 UA	15-1	20	0752 765 05	5-8	12	0756 326 22	5-14	1
0728 111 15	2-1	22	0752 765 05	5-9	12	0756 326 23	5-14	2
0728 111 15	5-8	7	0752 775 13	5-11	18	0756 326 25	5-14	13
0728 111 15	5-9	7	0752 928 07	5-8	25	0756 339 17	5-4	62
0728 111 15	5-10	7	0752 928 07	5-9	19	0756 339 80	5-4	46
0728 111 15	5-12	3	0752 949 07	5-10	19	0756 357 03	5-13	15
0728 111 15	11-1	29	0753 101 09	5-4	43	0756 611 13	5-5	12
0728 111 15	11-2	8	0753 265 UA	0-0	1	0756 611 13	5-5A	12
0728 111 55	5-12	7	0753 265 UA	1-3	5	0756 735 09	5-5	2
0728 111 55	11-2	12	0753 580 15	5-1	62	0756 735 09	5-5A	2
0728 111 55	12-1	11	0753 764 11	5-1	13	0756 735 15	5-5	7
0728 111 65	5-9	3	0753 764 15	5-1	18	0756 735 15	5-5A	7
0728 111 65	5-10	3	0753 764 16	5-1	19	0756 744 11	5-5	11
0728 111 65	5-11	6	0753 764 51	5-1	71	0756 744 11	5-5A	11
0729 910 35	15-9	9	0753 764 53	5-1	25	0756 781 14	5-15	13
0729 910 35	15-9[A]	9	0753 795 11	5-1	43	0756 781 14	5-15[A]	13
0729 910 60	7-4	4	0754 124 13	5-15	20	0756 863 09	5-15	16
0729 910 60	7-4[A]	4	0754 124 13	5-15[A]	20	0756 863 09	5-15[A]	16
0729 910 73	0-0	10	0754 804 UA	15-1	44	0756 865 08	5-4	53
0729 910 73	7-4	3	0754 804 UA	15-3	32	0757 606 20	5-1	9
0729 910 73	7-4[A]	3	0755 179 UA	0-0	2	0757 618 20	5-2	29
0729 910 80	7-4	1	0755 179 UA	5-6	5	0757 698 01	5-1	2
0729 910 80	7-4[A]	1	0755 821 08	5-3	4	0757 698 02	5-1	3
0745 266 08	0-0	7	0756 065 11	5-14	17-1	0757 698 06	5-1	11
0745 266 08	7-2	4-2	0756 065 13	5-14	14	0757 698 07	5-1	12
0745 266 08	7-2[A]	4-2	0756 094 01	5-15[B]	8	0757 698 16	5-1	24
0745 266 09	0-0	8	0756 094 02	5-15[B]	5	0757 698 17	5-1	27
0745 266 09	7-2	4-3	0756 094 03	5-15[B]	4	0757 698 32	5-1	42
0745 266 09	7-2[A]	4-3	0756 094 04	5-15[B]	1	0757 698 38	5-1	48
0745 266 UA	7-2	4	0756 094 05	5-15[B]	10	0757 698 39	5-1	50
0745 266 UA	7-2[A]	4	0756 094 06	5-15[B]	9	0757 698 47	5-1	49
0750 198 15	5-13	16	0756 094 07	5-15[B]	7	0757 740 12	5-1	28
0751 901 25	5-8	28	0756 094 08	5-15[B]	6	0757 740 14	5-1	44
0751 901 25	5-9	22	0756 094 UA	4-4[B]	68	0757 785 06	5-1	68
0751 948 06	5-13	14	0756 094 UA	5-15[B]	0	0758 697 20	5-9	26
0752 118 26	5-12	8	0756 303 07	5-5	10	0758 697 21	5-9	25
0752 184 24	5-12	19	0756 303 07	5-5A	10	0758 698 09	5-12	13
0752 239 24	5-8	4	0756 326 04	5-14	7	0758 799 07	5-8	6
0752 284 23	5-12	6	0756 326 06	5-14	17	0758 799 07	5-9	6
0752 393 22	5-11	5	0756 326 07	5-14	9	0758 857 06	5-10	13
0752 686 21	5-8	8	0756 326 08	5-14	6	0758 857 06	5-11	12
0752 686 21	5-9	8	0756 326 09	5-14	18	0758 858 02	5-8	13

https://truckmanualshub.com/

部品番号順索引

PARTS INDEX

PARTS No.	Sh No.	KEY No.	PARTS No.	Sh No.	KEY No.	PARTS No.	Sh No.	KEY No.
0758 858 02	5-9	13	0760 710 12	15-2	24	0760 715 55	5-10	14
0758 891 04	5-8	2	0760 710 12	15-3	28	0760 715 60	5-10	16
0759 144 01	0-0	3	0760 710 12	15-12	6	0760 715 60	5-11	13
0759 144 01	5-6	13-1	0760 710 14	5-7	4	0760 715 65	5-8	17
0759 144 UA	5-6	13	0760 710 16	1-7	3	0760 715 65	5-9	14
0759 301 UA	15-4	1	0760 710 16	4-1	15	0760 715 65	5-11	15
0760 211 18	5-15	17	0760 710 16	4-2	6	0760 715 70	5-8	16
0760 211 18	5-15[A]	17	0760 710 16	4-3	14	0760 715 70	5-9	16
0760 212 45	5-1	45	0760 710 16	4-4	41	0760 715 95	5-12	14
0760 310 20	5-13	8	0760 710 16	4-4[A]	41	0760 716 00	5-12	16
0760 310 25	5-13	9	0760 710 16	4-4[B]	41	0760 716 10	5-2	3
0760 312 11	5-6	10	0760 710 16	5-1	64	0760 716 25	5-2	2
0760 312 22	4-1	14	0760 710 16	5-2	27	0760 716 35	5-2	44
0760 312 39	5-1	38	0760 710 16	5-4	76-1	0760 716 40	5-2	5
0760 312 42	5-1	40	0760 710 16	5-7	5	0761 691 20	1-6	2
0760 319 10	5-4	75-3	0760 710 16	11-4	15	0761 730 12	1-5	2
0760 610 08	5-14	8	0760 710 16	12-2	7	0761 731 40	1-4	4
0760 615 75	5-3	8	0760 710 16	15-1	40	0762 120 09	5-4	37
0760 710 07	5-1	66	0760 710 16	15-4	6	0762 120 11	5-4	40
0760 710 07	5-1	66	0760 710 16	15-9	23	0762 120 12	5-4	29
0760 710 07	5-4	31	0760 710 16	15-9[A]	26	0762 120 16	5-2	26
0760 710 07	5-7	6	0760 710 19	1-7	20	0762 120 42	1-3	3
0760 710 08	5-1	69	0760 710 19	4-1	16	0762 120 60	5-3	11
0760 710 08	5-7	8	0760 710 19	4-3	15	0762 172 39	5-1	39
0760 710 08	5-13	10	0760 710 19	5-4	77-1	0762 172 42	5-1	41
0760 710 09	5-4	38	0760 710 19	7-1[A]	49	0765 033 27	11-1	36
0760 710 10	5-1	65	0760 710 19	7-3	10	0765 033 29	12-1	9
0760 710 10	5-4	64	0760 710 19	7-3[A]	10	0765 033 33	11-1	38
0760 710 11	5-4	39	0760 710 19	15-1	35	0775 551 85	0-0	6
0760 710 12	1-7	9	0760 710 19	15-4	10	0775 551 85	7-1	48
0760 710 12	4-3	30	0760 710 20	5-4	65	0775 551 85	7-1[A]	59
0760 710 12	4-4	4	0760 710 20	5-5	3	0775 551 88	0-0	4
0760 710 12	4-4[A]	4	0760 710 20	5-5A	3	0775 551 88	7-1	13
0760 710 12	4-4[B]	4	0760 710 22	5-2	25	0775 551 89	0-0	5
0760 710 12	5-1	57	0760 710 23	5-8	32	0775 551 89	7-1	14
0760 710 12	5-1	57	0760 710 23	5-10	25	0775 552 00	0-0	
0760 710 12	5-2	10	0760 710 24	4-1	34	0775 552 00	7-1[A]	13
0760 710 12	5-4	24	0760 710 25	5-1	53	0775 552 04	0-0	
0760 710 12	5-6	20	0760 710 30	4-1	33	0775 552 04	7-1[A]	14
0760 710 12	5-7	3	0760 710 30	5-6	9	0776 600 05	4-1	2
0760 710 12	5-13	18	0760 710 42	1-3	2	0776 600 07	4-1	1
0760 710 12	6-1	9	0760 710 60	5-3	10	0776 600 13	4-1	2
0760 710 12	6-3	10	0760 711 25	5-6	8	0779 000 88	11-2	13
0760 710 12	9-1[A]	52	0760 711 30	5-1	23	0779 002 97	7-1	25
0760 710 12	15-1	34	0760 715 55	5-7	7	0779 002 97	7-1[A]	25

https://truckmanualshub.com/

部品番号順索引

PARTS INDEX

PARTS No.	Sh No.	KEY No.	PARTS No.	Sh No.	KEY No.	PARTS No.	Sh No.	KEY No.
0779 004 13	7-2[A]	30	0781 375 17	5-1	51	0782 431 21	5-10	27
0779 005 32	7-2	6	0781 375 18	5-1	52	0782 445 03	5-11	8
0779 005 32	7-2[A]	6	0781 375 19	5-1	54	0782 445 91	0-0	27
0779 005 35	7-2	7	0781 375 20	5-1	55	0782 445 91	5-11	10
0779 005 49	7-2[A]	7	0781 375 21	5-1	56	0782 445 93	5-11	16
0779 005 54	7-2[A]	29	0781 375 22	5-1	58	0782 446 03	5-12	10
0780 072 91	5-7	9	0781 375 23	5-1	59	0782 446 05	5-8	31
0780 163 91	5-7	1	0781 375 24	5-1	70	0782 446 05	5-10	24
0780 163 92	5-7	10	0781 375 91	5-1	1	0782 446 06	5-8	33
0780 163 UA	5-7	0	0781 375 92	5-1	63	0782 446 06	5-10	26
0780 163 UA	7-3	1	0781 375 93	5-1	32	0782 464 03	5-9	23
0780 163 UA	7-3[A]	1	0781 375 94	5-1	47	0782 465 03	5-8	19
0781 100 01	5-1	5	0781 375 UA	1-1	11	0782 465 04	5-8	20
0781 100 16	5-1	29	0781 375 UA	5-1	0	0782 465 05	5-8	21
0781 100 18	5-1	31	0782 105 03	5-10	6	0782 465 06	5-8	22
0781 100 23	5-1	60	0782 287 13	5-10	10	0782 465 07	5-8	18
0781 229 03	5-1	36	0782 287 13	5-11	9	0782 465 91	0-0	24
0781 229 04	5-1	37	0782 367 05	5-11	14	0782 465 91	5-8	11
0781 248 01	5-2	37	0782 367 07	5-11	19	0782 609 02	5-12	5
0781 248 02	5-2	43	0782 367 13	5-8	10	0782 609 UA	5-12	0
0781 248 93	5-2	24	0782 367 13	5-9	10	0782 609 UA	12-1	3
0781 297 92	5-2	4	0782 368 03	5-8	9	0782 610 02	5-9	5
0781 297 93	5-2	13	0782 368 03	5-9	9	0782 610 UA	5-9	0
0781 313 92	5-2	31	0782 368 91	0-0	25	0782 610 UA	11-1	3
0781 374 91	5-2	34	0782 368 91	5-9	11	0782 611 02	5-10	5
0781 374 92	5-2	1	0782 368 93	5-8	23	0782 611 03	5-10	9
0781 374 93	5-2	35	0782 368 93	5-9	17	0782 611 05	5-10	23
0781 374 UA	3-1	1	0782 376 04	5-10	12	0782 611 UA	5-10	0
0781 374 UA	5-2	0	0782 376 04	5-11	11	0782 611 UA	11-1	4
0781 375 01	5-1	4	0782 376 05	5-10	15	0782 612 02	5-8	5
0781 375 02	5-1	8	0782 376 07	5-10	20	0782 612 06	5-8	29
0781 375 03	5-1	10	0782 376 91	0-0	26	0782 612 07	5-8	30
0781 375 04	5-1	14	0782 376 91	5-10	11	0782 612 UA	5-8	0
0781 375 05	5-1	15	0782 376 93	5-10	17	0782 612 UA	11-1	41
0781 375 06	5-1	16	0782 396 05	5-8	15	0782 613 02	5-11	4
0781 375 07	5-1	17	0782 396 05	5-9	15	0782 613 UA	5-11	0
0781 375 08	5-1	20	0782 396 07	5-8	26	0782 613 UA	11-2	2
0781 375 09	5-1	21	0782 396 07	5-9	20	0783 616 04	5-3	9
0781 375 10	5-1	21-1	0782 397 03	5-12	9	0783 637 16	5-15	15
0781 375 11	5-1	21-2	0782 397 04	5-12	15	0783 637 16	5-15[A]	15
0781 375 12	5-1	22	0782 397 06	5-12	20	0783 637 19	5-15	18
0781 375 13	5-1	30	0782 397 91	0-0	28	0783 637 19	5-15[A]	18
0781 375 14	5-1	33	0782 397 91	5-12	11	0783 637 20	5-15	19
0781 375 15	5-1	34	0782 397 93	5-12	17	0783 637 20	5-15[A]	19
0781 375 16	5-1	35	0782 431 21	5-8	34	0783 646 83	5-4	76

https://truckmanualshub.com/

部品番号順索引

PARTS INDEX

PARTS No.	Sh No.	KEY No.	PARTS No.	Sh No.	KEY No.	PARTS No.	Sh No.	KEY No.
0783 646 84	5-4	77	0783 951 16	5-13	26	0784 017 01	5-4	1
0783 646 85	5-4	75	0783 951 17	5-13	27	0784 017 02	5-4	25
0783 677 13	5-4	61	0783 951 18	5-13	28	0784 017 03	5-4	51
0783 677 14	5-4	63	0783 951 91	5-13	29	0784 017 04	5-4	68
0783 677 23	5-4	34	0783 964 01	5-5	5	0784 017 86	5-4	72
0783 677 24	5-4	42	0783 964 01	5-5A	15	0784 017 87	5-4	70
0783 677 26	5-4	41	0783 964 UA	4-4	1	0784 017 88	5-4	69
0783 677 27	5-4	36	0783 964 UA	4-4[A]	1	0784 017 89	5-4	14
0783 677 28	5-4	44	0783 964 UA	4-4[B]	1	0784 017 90	5-4	13
0783 677 29	5-4	33	0783 964 UA	5-5	0	0784 017 91	5-4	12
0783 677 30	5-4	35	0783 965 02	5-14	11	0784 017 92	5-4	11
0783 677 83	5-4	59	0783 965 03	5-14	11-1	0784 017 93	5-4	10
0783 677 84	5-4	71	0783 965 04	5-14	19	0784 017 94	5-4	9
0783 700 08	5-5	4	0783 965 11	5-14	15	0784 017 95	5-4	8
0783 700 08	5-5A	14	0783 965 UA	5-14	0	0784 017 96	5-4	7
0783 700 09	5-5	6	0783 965 UA	6-3	11	0784 017 97	5-4	6
0783 700 09	5-5A	6	0783 965 UA	15-1	48	0784 017 98	5-4	4
0783 700 10	5-5	14	0783 988 01	5-4	15	0784 017 99	5-4	3
0783 700 10	5-5A	16	0783 988 02	5-4	16	0784 017 UA	4-1	25
0783 700 12	5-5	9	0783 988 03	5-4	17	0784 017 UA	5-4	0
0783 700 12	5-5A	9	0783 988 04	5-4	18	0784 023 02	5-14	18
0783 749 02	5-4	45	0783 988 05	5-4	19	0784 023 UA	5-14	0
0783 756 01	5-5	13	0783 988 06	5-4	21	0784 023 UA	6-3	11
0783 756 01	5-5A	13	0783 988 07	5-4	22	0784 023 UA	15-1	48
0783 771 03	5-5	8	0783 988 08	5-4	23	0784 112 04	5-15	1
0783 771 03	5-5A	8	0783 988 10	5-4	26	0784 112 04	5-15[A]	1
0783 771 07	5-5	1	0783 988 11	5-4	27	0784 112 06	5-15	2
0783 771 07	5-5A	1	0783 988 12	5-4	28	0784 112 06	5-15[A]	2
0783 846 88	5-4	74	0783 988 13	5-4	79	0784 112 07	5-15	3
0783 920 06	5-13	17	0783 988 13	5-4	79	0784 112 08	5-15	4
0783 936 01	5-13	11	0783 988 14	5-4	49	0784 112 08	5-15[A]	4
0783 936 02	5-13	22	0783 988 15	5-4	50	0784 112 09	5-15	5
0783 951 01	5-13	1	0783 988 18	5-4	52	0784 112 09	5-15[A]	5
0783 951 02	5-13	2	0783 988 20	5-4	67	0784 112 10	5-15	6
0783 951 03	5-13	4	0783 988 21	5-4	57	0784 112 10	5-15[A]	6
0783 951 04	5-13	5	0783 988 22	5-4	60	0784 112 11	5-15	7
0783 951 05	5-13	6	0783 988 24	5-4	66	0784 112 11	5-15[A]	7
0783 951 06	5-13	7	0783 988 26	5-4	55	0784 112 20	5-15	14
0783 951 08	5-13	12	0783 988 27	5-4	56	0784 112 20	5-15[A]	14
0783 951 09	5-13	13	0783 988 29	5-4	78	0784 112 UA	4-4[A]	70
0783 951 10	5-13	20	0783 988 83	5-4	30	0784 112 UA	5-15	0
0783 951 11	5-13	21	0783 988 85	5-4	73	0784 113 11	5-15[A]	3
0783 951 13	5-13	23	0783 995 01	5-13	22	0784 113 UA	4-4[A]	70-1
0783 951 14	5-13	24	0783 995 UA	5-13	0	0784 113 UA	5-15[A]	0
0783 951 15	5-13	25	0783 995 UA	6-1	11	0784 127 01	5-5A	17

https://truckmanualshub.com/

部品番号順索引

PARTS INDEX

PARTS No.	Sh No.	KEY No.	PARTS No.	Sh No.	KEY No.	PARTS No.	Sh No.	KEY No.
0784 127 02	5-5A	4	0820 067 10	4-4	63	0851 000 01	9-1[A]	5-1
0784 127 03	5-5A	5	0820 067 10	4-4[A]	63	0851 000 04	9-1	5
0784 127 UA	4-4	1	0820 067 10	4-4[B]	63	0851 000 04	9-1[A]	5
0784 127 UA	4-4[A]	1	0820 067 10	7-1	16	0852 119 22	9-1	39
0784 127 UA	4-4[B]	1	0820 067 10	7-1[A]	16	0852 119 22	9-1[A]	36
0784 127 UA	5-5A	0	0820 067 31	9-1	23	0854 523 01	15-14	4-1
0784 128 01	5-13	23	0820 067 31	9-1[A]	23	0854 523 06	15-14	4-2
0784 128 UA	5-13	0	0820 215 07	0-0	12	0854 523 UA	15-14	4
0784 128 UA	6-1	11	0820 215 07	9-1	48	0854 529 01	9-1	2-2
0785 169 UA	15-1	42	0820 215 07	9-1[A]	46	0854 529 01	9-1[A]	2-2
0785 171 UA	15-3	18	0820 215 07	9-2	27	0854 529 05	9-1	2-1
0785 640 UA	5-4	75-1	0820 215 10	9-1	38	0854 529 05	9-1[A]	2-1
0785 641 UA	5-4	75-2	0820 215 10	9-1[A]	35	0854 529 UA	9-1	2
0785 697 19	5-9	24	0820 215 11	9-1[A]	47	0854 529 UA	9-1[A]	2
0785 947 UA	4-1	31	0820 513 UA	6-2	54	0854 536 01	15-14	1-1
0787 045 UA	15-2	19	0820 514 UA	6-2	51	0854 536 11	15-14	1-2
0787 305 UA	5-6	3	0820 657 08	15-5	15	0854 536 UA	15-14	1
0790 000 04	1-7	18	0820 803 01	9-1[A]	51-1	0857 011 48	15-12	2
0820 023 16	15-9	5	0820 803 02	7-4	47	0857 011 57	9-2	39
0820 023 16	15-9[A]	5	0820 803 02	7-4[A]	48	0857 056 03	15-9	1
0820 067 03	6-2	52	0820 803 04	7-4	44	0857 056 03	15-9[A]	1
0820 067 03	6-3	18	0820 803 04	7-4[A]	47	0857 909 UA	7-4	20
0820 067 03	9-1	21	0820 803 05	15-4	5	0857 909 UA	7-4[A]	20
0820 067 03	9-1[A]	21	0820 803 06	15-9	18	0857 914 11	0-0	9
0820 067 03	15-13	13	0820 803 06	15-9[A]	17	0857 914 11	7-4	45-1
0820 067 04	7-4	33	0830 107 06	9-1	40-6	0857 914 11	7-4[A]	49-1
0820 067 04	9-1	44	0830 107 06	9-1[A]	38-6	0857 914 UA	7-4	45
0820 067 04	9-1[A]	42	0830 107 07	9-1	40-5	0857 914 UA	7-4[A]	49
0820 067 04	11-4	22	0830 107 07	9-1[A]	38-5	0858 140 01	9-1	40-1
0820 067 04	15-12	7	0830 107 08	9-1	40-4	0858 140 01	9-1[A]	38-1
0820 067 05	4-4	45	0830 107 08	9-1[A]	38-4	0858 180 10	15-12	3
0820 067 05	4-4[A]	45	0830 107 09	9-1	40-3	0858 306 03	0-0	11
0820 067 05	4-4[B]	45	0830 107 09	9-1[A]	38-3	0858 306 03	9-2	24
0820 067 05	9-1	22	0830 107 10	9-1	40-2	0858 306 04	9-2	24-1
0820 067 05	9-2	23	0830 107 10	9-1[A]	38-2	0858 314 02	9-2	47
0820 067 05	15-2	16	0830 107 11	9-1	40-8	0858 314 11	15-14	10
0820 067 05	15-9	15	0830 107 11	9-1[A]	38-8	0858 314 12	15-14	11
0820 067 05	15-9[A]	15	0830 107 12	9-1	40-7	0858 314 15	6-2	21
0820 067 07	6-2	38	0830 107 12	9-1[A]	38-7	0858 314 33	9-2	30
0820 067 09	1-7	22	0830 291 01	9-1	12-1	0858 314 34	15-9	19
0820 067 09	4-2	9	0830 291 01	9-1[A]	12-1	0858 314 34	15-9[A]	18
0820 067 09	4-4	62	0830 406 02	9-2	22	0858 314 35	9-2	34
0820 067 09	4-4[A]	62	0830 408 00	15-5	14	0858 501 16	9-1[A]	51
0820 067 09	4-4[B]	62	0850 500 10	15-5	13	0858 614 12	6-4[A]	10
0820 067 09	9-2	43	0851 000 01	9-1	5-1	0861 001 02	9-1	3

https://truckmanualshub.com/

部品番号順索引

PARTS INDEX

PARTS No.	Sh No.	KEY No.	PARTS No.	Sh No.	KEY No.	PARTS No.	Sh No.	KEY No.
0861 001 02	9-1[A]	3	4004 364 01	9-2	7	4012000356	15-7	18
0879 551 64	9-1	13	4006 119 01	6-4[A]	24	4012000367	15-7	24
0879 551 64	9-1[A]	13	4006 119 01	8-4[A]	10	4012000370	15-8	17
0881 509 UA	9-2	1	4006 119 02	8-2	53	4012000390	15-6	36
0891 802 UA	6-4[A]	1	4006 119 02	9-2	46	4012000428	15-8	36
0891 922 UA	9-1[A]	45	4006 276 00	1-4	3	4013001417	15-6	45
0893 508 UA	15-13	1	4006 386 00	8-4[A]	12	4013001418	15-6	46
0893 509 UA	9-2	32	4006 529 00	7-4	50	4013001426	15-6	34
0910 870 05	2-1	13	4006 529 00	7-4[A]	53	4013001437	15-8	60
0910 870 05	7-1	42	4006 540 31	11-2	11	4013001438	15-8	59
0910 870 05	7-1[A]	42	4006 540 32	11-2	11-1	4013001450	15-8	47
0910 870 05	8-1	23	4006 557 00	11-1	33	4015000088	15-6	26
0910 870 05	8-2	46	4006 604 01	11-1	37	4015000091	15-6	55
0910 911 00	11-1	42	4006 604 02	11-1	37-1	4015000091	15-8	35
0910 931 36	7-1	11	4007 306 00	11-3	12	4015000092	15-6	27
0910 931 36	7-1[A]	11	4012000138	15-6	49	4015000109	15-6	48
0910 931 37	7-1	12	4012000185	15-6	39	4016000000	15-6	2
0910 931 38	7-1[A]	12	4012000185	15-7	27	4016000001	15-6	3
0910 940 24	8-2	51	4012000185	15-8	22	4016000002	15-6	4
0910 940 26	15-4	11	4012000186	15-8	21	4016000003	15-6	5
0910 941 42	7-1	26	4012000189	15-8	52	4016000004	15-6	6
0910 941 42	7-1[A]	26	4012000206	15-6	31	4016000005	15-6	7
0910 942 02	15-9	16	4012000206	15-8	37	4016000006	15-6	8
0931 070 24	10-1	5	4012000210	15-8	64	4016000007	15-6	9
0931 109 25	10-1	2	4012000215	15-8	49	4016000008	15-6	10
0931 301 04	10-1	6	4012000216	15-7	45	4016000009	15-6	11
0931 331 10	10-1	4	4012000239	15-7	12	4016000010	15-6	12
0931 370 10	10-1	3-1	4012000240	15-8	23	4016000011	15-6	13
0931 370 11	10-1	3	4012000245	15-7	46	4016000012	15-6	14
0931 371 01	10-1	3-2	4012000250	15-7	40	4016000013	15-6	15
2034207015	15-6	58	4012000251	15-7	38	4016000014	15-6	16
3034212018	15-6	0	4012000252	15-7	39	4016000015	15-6	17
3034212018	15-7	0	4012000254	15-7	41	4016000016	15-6	18
3034212018	15-8	0	4012000255	15-7	42	4016000017	15-6	19
3034212019	15-6	0-1	4012000256	15-7	43	4016000018	15-6	20
3034212019	15-7	0-1	4012000257	15-6	50	4016000019	15-6	21
3034212019	15-8	0-1	4012000259	15-6	53	4016000020	15-6	22
3442505	15-6	35	4012000260	15-6	47	4016000021	15-6	37
4003 020 01	7-2	5	4012000274	15-7	32	4016000022	15-6	37-1
4003 020 01	7-2[A]	5	4012000291	15-7	13	4016000023	15-6	24
4004 022 17	9-1	6	4012000297	15-7	20	4016000024	15-6	25
4004 022 17	9-1[A]	6	4012000303	15-7	28	4016000025	15-6	28
4004 161 00	1-3	11	4012000314	15-7	33	4016000027	15-6	29
4004 364 01	6-2	5	4012000316	15-7	34	4016000029	15-6	30
4004 364 01	8-2	31	4012000352	15-8	62	4016000029	15-8	28

https://truckmanualshub.com/

部品番号順索引

PARTS INDEX

PARTS No.	Sh No.	KEY No.	PARTS No.	Sh No.	KEY No.	PARTS No.	Sh No.	KEY No.
4016000030	15-6	32	4016000069	15-8	1	4016000114	15-8	61
4016000031	15-6	33	4016000070	15-8	2	4016000115	15-8	65
4016000033	15-6	57	4016000071	15-8	3	4016000116	15-8	66
4016000033	15-6	57	4016000072	15-8	4	4016000233	15-6	23
4016000033	15-7	3	4016000073	15-8	5	4016000234	15-6	23-1
4016000033	15-8	63	4016000074	15-8	6	4016000235	15-6	16
4016000033	15-8	63	4016000075	15-8	7	4016 030 03	6-4	2
4016000034	15-6	40	4016000076	15-8	8	4016 030 04	6-2	23
4016000035	15-6	56	4016000077	15-8	9	4016 030 04	8-2	25
4016000035	15-6	56	4016000078	15-8	10	4019 463 00	6-4	1
4016000035	15-7	2	4016000079	15-8	11	4019 906 00	6-4	6
4016000036	15-6	42	4016000080	15-8	12	4040 468 02	11-1	20
4016000037	15-6	43	4016000081	15-8	13	4040 468 13	11-1	21
4016000038	15-6	44	4016000082	15-8	14	4040 867 00	6-2	16
4016000039	15-6	51	4016000083	15-8	15	4042 204 00	1-5	1
4016000040	15-6	52	4016000084	15-8	16	4043 229 01	11-1	24
4016000041	15-6	54	4016000085	15-8	18	4043 229 09	11-1	15
4016000042	15-7	1	4016000086	15-8	19	4043 231 11	11-1	18
4016000043	15-7	4	4016000087	15-8	20	4043 358 03	12-1	10
4016000044	15-7	5	4016000088	15-8	24	4060 051 00	4-2	15
4016000045	15-7	6	4016000089	15-8	25	4070 000 05	12-2	4
4016000046	15-7	7	4016000090	15-8	26	4070 000 56	12-2	3
4016000047	15-7	8	4016000091	15-8	27	4070 001 09	4-2	3
4016000048	15-7	9	4016000092	15-8	30	4070 001 73	4-2	4
4016000049	15-7	10	4016000093	15-8	31	4070 001 90	12-2	2
4016000050	15-7	11	4016000094	15-8	32	4070 001 92	11-4	5
4016000051	15-7	14	4016000095	15-8	33	4070 002 04	1-7	1
4016000052	15-7	15	4016000096	15-8	34	4070 015 15	4-1	7
4016000053	15-7	16	4016000097	15-8	38	4070 056 40	15-4	4
4016000054	15-7	17	4016000098	15-8	40	4070 056 47	15-3	21
4016000054	15-8	39	4016000099	15-8	41	4070 102 21	15-9[A]	6
4016000055	15-7	19	4016000100	15-8	42	4070 102 22	15-9	7
4016000056	15-7	21	4016000101	15-8	43	4070 102 39	15-9	6
4016000057	15-7	22	4016000102	15-8	44	4070 102 48	15-9[A]	7
4016000058	15-7	23	4016000103	15-8	45	4070 245 13	7-4[A]	26
4016000059	15-7	25	4016000104	15-8	46	4070 245 18	7-4	25
4016000060	15-7	26	4016000105	15-8	48	4070 245 36	7-4[A]	30
4016000061	15-7	29	4016000106	15-8	50	4070 245 38	7-4[A]	28
4016000062	15-7	30	4016000107	15-8	51	4070 245 39	7-4[A]	27
4016000063	15-7	31	4016000108	15-8	53	4070 245 41	7-4	24
4016000064	15-7	35	4016000109	15-8	54	4070 245 45	7-4[A]	25
4016000065	15-7	36	4016000110	15-8	55	4070 245 54	7-4	28
4016000066	15-7	37	4016000111	15-8	56	4070 245 56	7-4	27
4016000067	15-7	44	4016000112	15-8	57	4070 245 63	7-4	26
4016000068	15-7	47	4016000113	15-8	58	4070 350 03	4-2	8

https://truckmanualshub.com/

部品番号順索引

PARTS INDEX

PARTS No.	Sh No.	KEY No.	PARTS No.	Sh No.	KEY No.	PARTS No.	Sh No.	KEY No.
4070 472 12	4-3	12	4070 548 73	4-4	14	4070 551 42	4-4[B]	21
4070 472 25	4-3	11	4070 548 73	4-4[A]	14	4070 551 42	6-1	4
4070 472 26	15-2	11	4070 548 73	4-4[B]	14	4070 551 43	4-4	23
4070 472 27	15-2	10	4070 548 75	4-4	54	4070 551 43	4-4[A]	23
4070 504 02	15-2	18	4070 548 75	4-4[A]	54	4070 551 43	4-4[B]	23
4070 548 01	4-4	25	4070 548 75	4-4[B]	54	4070 551 44	4-4	22
4070 548 01	4-4[A]	25	4070 548 80	4-4	33	4070 551 44	4-4[A]	22
4070 548 01	4-4[B]	25	4070 548 80	4-4[A]	33	4070 551 44	4-4[B]	22
4070 548 01	6-3	3	4070 548 80	4-4[B]	33	4070 642 10	15-2	3
4070 548 04	4-4	27	4070 548 82	4-4	37	4070 642 11	15-3	3
4070 548 04	4-4[A]	27	4070 548 82	4-4[A]	37	4070 659 16	12-2	1
4070 548 04	4-4[B]	27	4070 548 82	4-4[B]	37	4070 662 04	15-1	3
4070 548 06	4-4	56	4070 548 85	4-4	35	4070 782 18	4-4	20
4070 548 06	4-4[A]	56	4070 548 85	4-4[A]	35	4070 782 18	4-4[A]	20
4070 548 06	4-4[B]	56	4070 548 85	4-4[B]	35	4070 782 18	4-4[B]	20
4070 548 08	4-4	59	4070 548 89	4-4	29	4070 782 19	4-4	30
4070 548 08	4-4[A]	59	4070 548 89	4-4[A]	29	4070 782 19	4-4[A]	30
4070 548 08	4-4[B]	59	4070 548 89	4-4[B]	29	4070 782 19	4-4[B]	30
4070 548 15	4-4	18	4070 551 01	4-4	31	4070 783 28	15-1	30
4070 548 15	4-4[A]	18	4070 551 01	4-4[A]	31	4070 853 17	11-4	8
4070 548 15	4-4[B]	18	4070 551 01	4-4[B]	31	4070 860 56	15-2	13
4070 548 18	6-3	4	4070 551 01	6-1	2	4070 899 03	7-4[A]	29
4070 548 19	4-4	58	4070 551 02	1-7	8	4072 220 00	15-9[A]	25
4070 548 19	4-4[A]	58	4070 551 04	6-1	4	4072 662 03	1-7	11
4070 548 19	4-4[B]	58	4070 551 06	4-4	17	4072 887 00	5-6	4
4070 548 23	4-4	36	4070 551 06	4-4[A]	17	4077 036 00	5-6	7
4070 548 23	4-4[A]	36	4070 551 06	4-4[B]	17	4079 027 00	5-6	6
4070 548 23	4-4[B]	36	4070 551 11	15-3	22	4080 000 01	6-4	10
4070 548 33	4-4	32	4070 551 13	6-1	5	4080 000 01	6-4[A]	22
4070 548 33	4-4[A]	32	4070 551 13	15-1	28	4080 000 03	9-1	19
4070 548 33	4-4[B]	32	4070 551 14	4-4	16	4080 000 03	9-1[A]	19
4070 548 40	6-3	5	4070 551 14	4-4[A]	16	4080 000 04	9-1[A]	22
4070 548 41	4-4	28	4070 551 14	4-4[B]	16	4080 000 04	15-4	9
4070 548 41	4-4[A]	28	4070 551 15	4-4	50	4080 000 05	11-4	12
4070 548 41	4-4[B]	28	4070 551 15	4-4[A]	50	4080 000 06	4-1	12
4070 548 42	15-1	24	4070 551 15	4-4[B]	50	4080 000 06	9-1	43
4070 548 43	15-1	25	4070 551 20	6-3	2	4080 000 06	9-1[A]	41
4070 548 55	4-4	47	4070 551 28	4-4	15	4080 000 08	9-1	52
4070 548 55	4-4[A]	47	4070 551 28	4-4[A]	15	4080 000 09	4-4	61
4070 548 55	4-4[B]	47	4070 551 28	4-4[B]	15	4080 000 09	4-4[A]	61
4070 548 58	6-3	6	4070 551 40	4-4	19	4080 000 09	4-4[B]	61
4070 548 64	6-3	1	4070 551 40	4-4[A]	19	4080 000 09	15-2	14
4070 548 69	6-1	6	4070 551 40	4-4[B]	19	4080 000 10	4-4	42
4070 548 71	1-7	15	4070 551 42	4-4	21	4080 000 10	4-4[A]	42
4070 548 72	15-1	29	4070 551 42	4-4[A]	21	4080 000 10	4-4[B]	42

https://truckmanualshub.com/

部品番号順索引

PARTS INDEX

PARTS No.	Sh No.	KEY No.	PARTS No.	Sh No.	KEY No.	PARTS No.	Sh No.	KEY No.
4080 000 11	4-4	48	4405 308 02	4-4[B]	35-1	4405 312 02	4-4[A]	24-1
4080 000 12	4-4	75	4405 308 03	4-4	55-1	4405 312 02	4-4[B]	24-1
4080 000 12	4-4[A]	48	4405 308 03	4-4[A]	55-1	4405 318 01	11-4	35-1
4080 000 12	4-4[B]	48	4405 308 03	4-4[B]	55-1	4405 318 02	11-4	36-1
4080 000 12	7-4	31	4405 308 03	15-2	13-1	4405 319 01	11-4	29-1
4080 000 14	7-4	29	4405 308 04	4-4	58-1	4405 319 02	11-4	30-1
4080 000 14	7-4[A]	31	4405 308 04	4-4[A]	58-1	4405 320 01	11-4	33-1
4080 000 14	11-4	13	4405 308 04	4-4[B]	58-1	4405 320 02	11-4	34-1
4080 000 24	9-1	34	4405 309 01	4-4	28-1	4406 458 00	8-7[A]	8
4080 000 24	9-1[A]	31	4405 309 01	4-4[A]	28-1	4406 458 00	15-10[A]	8
4080 000 29	7-1[A]	51	4405 309 01	4-4[B]	28-1	4407 035 00	8-7	22
4080 000 29	7-4	30	4405 309 02	4-4	29-1	4407 035 00	8-7[A]	21
4080 000 29	7-4[A]	32	4405 309 02	4-4[A]	29-1	4407 035 00	15-10	22
4081 118 00	15-2	5	4405 309 02	4-4[B]	29-1	4407 035 00	15-10[A]	21
4081 118 00	15-3	7	4405 309 03	4-4	51-1	4407 974 00	8-7[A]	4
4081 189 00	11-4	11	4405 309 03	4-4[A]	51-1	4407 974 00	15-10[A]	4
4081 189 00	15-3	8	4405 309 03	4-4[B]	51-1	4409 625 09	9-1	7
4096 033 00	15-1	52	4405 309 03	15-1	27-1	4409 625 09	9-1[A]	7
4123 040 00	0-0	18	4405 309 04	4-4	53-1	4409 625 10	9-1	11
4123 040 00	11-3	15	4405 309 04	4-4[A]	53-1	4409 625 10	9-1[A]	11
4123 041 00	0-0	19	4405 309 04	4-4[B]	53-1	4420 732 00	1-4	2
4123 041 00	11-3	5	4405 309 04	15-3	19-1	4435 634 00	11-3	11
4131 251 00	11-3	13	4405 310 01	4-4	27-1	4447 479 00	8-7	7
4170 177 00	1-3	13	4405 310 01	4-4[A]	27-1	4447 479 00	15-10	7
4220 516 00	1-4	9	4405 310 01	4-4[B]	27-1	4447 653 00	8-7	36
4220 517 00	1-5	7	4405 310 02	4-4	36-1	4447 653 00	15-10	36
4405 307 01	4-4	33-1	4405 310 02	4-4[A]	36-1	4447 857 00	8-7[A]	33
4405 307 01	4-4[A]	33-1	4405 310 02	4-4[B]	36-1	4447 857 00	15-10[A]	33
4405 307 01	4-4[B]	33-1	4405 310 03	4-4	52-1	4447 874 00	8-7	35
4405 307 02	4-4	34-1	4405 310 03	4-4[A]	52-1	4447 874 00	15-10	35
4405 307 02	4-4[A]	34-1	4405 310 03	4-4[B]	52-1	4448 651 00	8-7[A]	32
4405 307 02	4-4[B]	34-1	4405 310 03	15-2	12-1	4448 651 00	15-10[A]	32
4405 307 03	4-4	57-1	4405 310 04	4-4	54-1	4448 987 00	4-4[B]	74
4405 307 03	4-4[A]	57-1	4405 310 04	4-4[A]	54-1	4450 505 00	10-1	1
4405 307 03	4-4[B]	57-1	4405 310 04	4-4[B]	54-1	4457 535 00	9-2	25
4405 307 03	15-1	26-1	4405 311 01	4-4	32-1	4459 598 00	7-2	13
4405 307 04	4-4	56-1	4405 311 01	4-4[A]	32-1	4459 598 00	7-2[A]	13
4405 307 04	4-4[A]	56-1	4405 311 01	4-4[B]	32-1	4460 756 00	1-1	3
4405 307 04	4-4[B]	56-1	4405 311 02	4-4	25-1	4460 756 00	2-1	23
4405 307 04	15-3	20-1	4405 311 02	4-4[A]	25-1	4461 717 00	1-1	6
4405 308 01	4-4	23-1	4405 311 02	4-4[B]	25-1	4475 586 00	1-1	21
4405 308 01	4-4[A]	23-1	4405 312 01	4-4	59-1	4475 587 00	1-1	20
4405 308 01	4-4[B]	23-1	4405 312 01	4-4[A]	59-1	4485 513 00	1-3	14
4405 308 02	4-4	35-1	4405 312 01	4-4[B]	59-1	4497 989 00	15-1	51
4405 308 02	4-4[A]	35-1	4405 312 02	4-4	24-1	4511 501 07	0-0	14

https://truckmanualshub.com/

部品番号順索引

PARTS INDEX

PARTS No.	Sh No.	KEY No.	PARTS No.	Sh No.	KEY No.	PARTS No.	Sh No.	KEY No.
4511 501 07	11-1	23	D017 233 01	12-1	5	D060 451 00	15-1	10
4514 545 00	1-3	1	D017 233 04	11-1	14	D060 451 00	15-3	33
4515 508 00	1-3	4	D017 234 01	12-1	8	D060 482 00	4-3	23
4522 707 01	15-14	9	D017 236 01	11-1	8	D060 483 00	4-2	10
4550 519 00	2-1	10	D017 236 01	11-2	3	D060 483 00	4-3	24
4550 519 00	8-1	24	D017 236 03	11-2	5	D060 483 00	15-1	37
4550 519 00	8-2	5	D017 258 00	11-2	4	D060 500 00	15-1	11
4550 519 00	8-3	24	D017 271 01	11-1	13	D060 500 00	15-3	34
4550 726 00	8-2	23	D031 031 00	1-5	6	D060 514 00	4-1	27
4550 726 00	15-9	13	D040 178 00	6-2	35	D060 515 00	4-1	28
4550 726 00	15-9[A]	13	D040 197 00	11-1	22	D060 518 00	15-4	2
4550 906 25	15-5	11	D040 218 00	4-3	13	D060 536 00	4-2	16
4550 906 26	15-5	12	D040 345 00	4-4[A]	69	D060 536 00	11-4	39
4580 016 00	4-4	72	D040 346 00	6-4[A]	11	D060 537 00	4-3	20
4580 016 00	4-4[A]	72	D042 040 00	6-2	33	D060 538 00	4-1	11
4580 016 00	4-4[B]	75	D042 069 00	6-2	33-1	D060 561 00	7-1[A]	45
4580 729 00	1-7	21	D042 078 00	11-1	43	D060 572 00	4-3	31
4580 730 00	11-4	28	D043 099 00	11-2	6	D065 093 00	4-4	10
4591 982 11	9-1	30	D043 111 00	11-1	39	D065 093 00	4-4[A]	10
4591 982 11	9-1[A]	29	D043 116 00	11-2	7	D065 093 00	4-4[B]	10
5290105300	15-6	1-1	D047 002 00	11-2	16	D065 094 00	4-4	46
5301 226 98	1-3	0	D047 058 00	11-1	19	D065 094 00	4-4[A]	46
5388 510 00	10-1	0	D047 058 00	12-1	6	D065 094 00	4-4[B]	46
5988 004 06	0-0	51	D047 059 00	11-1	35	D070 110 01	4-1	6
5988 004 09	0-0	51-1	D047 059 00	11-2	10	D070 110 15	4-1	4
5988 004 32	0-0	52	D060 028 00	4-4	73	D070 141 02	11-4	7
5988 004 33	0-0	52-1	D060 028 00	4-4	73	D070 141 05	11-4	6
5988 009 00	0-0	50	D060 028 00	4-4[A]	77	D070 141 14	11-4	6-1
5988 022 01	0-0	54	D060 028 00	4-4[A]	77	D070 141 17	11-4	7-1
D002 001 00	2-1	16	D060 028 00	4-4[A]	77	D070 195 23	15-3	20
D004 049 02	6-2	46	D060 028 00	4-4[B]	76	D070 313 00	7-2	21
D006 038 00	8-6	4	D060 028 00	4-4[B]	76	D070 313 00	7-2[A]	22
D006 051 00	0-0	22	D060 028 00	6-3	7	D070 363 03	4-3	6
D006 051 00	11-3	4	D060 028 00	15-1	43	D070 363 15	4-2	1
D006 144 00	7-1	10	D060 028 00	15-2	23	D070 363 20	15-1	31
D006 144 00	7-1[A]	10	D060 032 00	11-4	9	D070 363 24	4-2	7
D007 126 00	1-1	24	D060 032 00	12-2	9	D070 363 24	4-3	7
D007 147 00	8-2	27	D060 137 00	4-4	68	D070 363 27	4-3	8
D013 353 00	11-1	12	D060 137 00	4-4[B]	70	D070 363 28	4-3	9
D013 354 00	11-1	11	D060 137 00	15-2	6	D070 363 29	4-3	10
D013 360 00	0-0	13	D060 137 00	15-3	9	D070 367 12	15-1	26
D013 360 00	11-1	10	D060 164 00	4-3	31	D070 367 13	15-1	27
D013 377 01	11-1	9	D060 227 00	4-1	9	D070 372 02	15-1	4
D013 384 00	6-1	25	D060 310 00	7-1[A]	44	D070 460 12	11-4	29
D017 225 00	6-2	15	D060 451 00	4-3	19	D070 460 13	11-4	30

https://truckmanualshub.com/

部品番号順索引

PARTS INDEX

PARTS No.	Sh No.	KEY No.	PARTS No.	Sh No.	KEY No.	PARTS No.	Sh No.	KEY No.
D070 460 14	11-4	33	D215 232 00	11-1	2-1	D405 272 00	8-4	9
D070 460 15	11-4	34	D230 060 00	7-3	2	D405 323 00	8-7[A]	20
D070 460 18	11-4	35	D230 071 00	7-3[A]	2	D405 323 00	15-10[A]	20
D070 460 19	11-4	36	D234 035 00	1-1	12	D405 332 00	8-7	16
D070 461 10	4-2	2	D236 013 00	1-4	7	D405 332 00	15-10	16
D070 461 13	4-3	10	D245 048 00	7-2[A]	24	D405 359 00	8-7[A]	15
D070 522 01	11-4	3	D257 109 00	12-1	4	D405 359 00	15-10[A]	15
D070 522 02	11-4	4	D260 381 00	15-11	7	D405 366 00	8-7[A]	13
D070 558 01	4-1	5	D260 494 00	8-1	6	D405 366 00	15-10[A]	13
D070 573 00	7-4	2	D260 524 00	1-7	6	D405 373 00	8-7	21
D070 573 00	7-4[A]	2	D260 552 00	8-1	6	D405 373 00	15-10	21
D070 577 01	4-4	60	D270 016 00	11-3	1-7	D405 424 00	8-7	14
D070 577 01	4-4[A]	60	D270 118 00	11-3	1-3	D405 424 00	15-10	14
D070 577 01	4-4[B]	60	D270 119 00	11-3	1-2	D405 447 00	4-4[A]	71
D081 023 00	15-1	8	D270 120 00	11-3	1	D405 449 00	8-7	20
D081 023 00	15-3	30	D270 121 00	11-3	1-4	D405 449 00	15-10	20
D081 192 00	15-1	9	D270 123 00	11-3	1-1	D405 450 00	8-7	11
D081 192 00	15-3	31	D270 125 00	11-3	1-5	D405 450 00	15-10	11
D081 194 00	15-1	7	D270 127 00	11-3	1-6	D405 451 00	8-7	18
D081 194 00	15-3	6	D284 220 00	7-4	19	D405 451 00	15-10	18
D082 107 00	15-1	5	D284 220 00	7-4[A]	19	D405 452 00	8-7	15
D082 107 00	15-3	4	D284 240 00	5-6	1	D405 452 00	15-10	15
D082 109 00	15-2	4	D284 247 00	5-6	1	D405 453 00	15-10	26
D082 109 00	15-3	5	D286 252 00	5-6	2	D405 454 00	8-7	12
D082 111 00	15-1	6	D286 272 00	4-1	3	D405 454 00	15-10	12
D083 146 00	4-3	2	D286 279 00	4-1	8	D405 455 00	8-7	13
D083 153 00	7-4	8	D286 309 00	11-4	2	D405 455 00	15-10	13
D083 153 00	7-4[A]	8	D286 310 00	11-4	1	D405 462 00	8-7	17
D170 052 00	6-2	19	D286 313 00	15-1	1	D405 462 00	15-10	17
D181 002 00	6-3	14	D286 314 00	15-1	2	D405 463 00	8-7	19
D200 195 00	1-1	2	D286 315 00	15-2	1	D405 463 00	15-10	19
D204 357 00	2-1	1	D286 316 00	15-2	2	D405 503 00	8-7[A]	16
D204 391 00	2-1	1-1	D286 317 00	15-3	1	D405 503 00	15-10[A]	16
D204 398 00	2-1	1	D286 318 00	15-3	2	D405 504 00	8-7[A]	18
D206 826 00	8-6	1	D286 380 00	4-1	8	D405 504 00	15-10[A]	18
D206 870 00	7-1	45	D400 273 00	8-1	14	D405 505 00	8-7[A]	12
D206 870 00	7-1[A]	56	D400 273 00	8-2	16	D405 505 00	15-10[A]	12
D206 872 00	7-4	11	D405 094 00	8-7	3	D405 506 00	8-7[A]	19
D206 872 00	7-4[A]	11	D405 094 00	8-7[A]	3	D405 506 00	15-10[A]	19
D206 873 00	8-4[A]	2	D405 094 00	15-10	3	D405 507 00	8-7[A]	10
D206 875 00	8-4	8	D405 094 00	15-10[A]	3	D405 507 00	15-10[A]	10
D206 906 00	8-2	28	D405 097 00	8-7[A]	24	D405 508 00	8-7[A]	17
D206 935 00	8-2	28	D405 097 00	15-10[A]	24	D405 508 00	15-10[A]	17
D210 142 00	11-1	1	D405 272 00	4-4	66	D405 509 00	8-7[A]	14
D215 221 00	11-1	2	D405 272 00	4-4[B]	66	D405 509 00	15-10[A]	14

https://truckmanualshub.com/

部品番号順索引

PARTS INDEX

PARTS No.	Sh No.	KEY No.	PARTS No.	Sh No.	KEY No.	PARTS No.	Sh No.	KEY No.
D405 510 00	15-10[A]	26	D406 629 00	15-10	32	D408 314 00	8-7	33
D405 511 00	8-7[A]	11	D406 630 00	15-10	29	D408 314 00	15-10	33
D405 511 00	15-10[A]	11	D406 630 00	15-10[A]	29	D408 324 00	8-7	4
D405 518 00	4-4[A]	71-1	D406 631 00	8-7	23	D408 324 00	15-10	4
D405 667 00	8-7	12	D406 631 00	15-10	23	D408 328 00	8-7	10
D405 667 00	15-10	12	D406 783 00	8-7[A]	22	D408 328 00	15-10	10
D405 668 00	8-7[A]	11	D406 783 00	15-10[A]	22	D408 354 00	8-7	37
D405 668 00	15-10[A]	11	D406 930 00	15-1	53	D408 355 00	8-7[A]	6
D406 490 00	8-7	5	D406 931 00	15-1	54	D408 355 00	15-10[A]	6
D406 490 00	15-10	5	D407 056 00	15-10	37	D408 370 00	8-7	26
D406 499 01	6-1	1-1	D407 818 01	6-3	3-1	D408 370 00	8-7[A]	26
D406 499 02	6-1	3-1	D407 818 02	6-3	5-1	D408 371 00	8-7	24
D406 499 03	6-1	2-1	D407 818 03	4-4	50-1	D408 371 00	8-7[A]	23
D406 499 04	6-1	4-1	D407 818 03	4-4[A]	50-1	D408 371 00	15-10	24
D406 504 00	8-7[A]	5	D407 818 03	4-4[B]	50-1	D408 371 00	15-10[A]	23
D406 504 00	15-10[A]	5	D407 818 04	4-4	22-1	D408 375 00	8-4	12
D406 597 00	8-7	9	D407 818 04	4-4[A]	22-1	D408 376 00	8-4	11
D406 597 00	15-10	9	D407 818 04	4-4[B]	22-1	D408 377 00	15-5	18
D406 602 00	8-7	29	D407 819 00	9-2	20	D408 378 00	15-5	17
D406 602 00	8-7[A]	29	D407 820 00	15-9	24	D408 402 00	8-7	27
D406 603 00	8-7	30	D407 820 00	15-9[A]	22	D408 402 00	8-7[A]	27
D406 603 00	8-7[A]	30	D407 822 00	9-2	29	D408 402 00	15-10	27
D406 604 00	8-7	30-1	D407 823 00	9-2	26	D408 402 00	15-10[A]	27
D406 604 00	8-7[A]	30-1	D407 873 00	8-7	8	D408 403 00	8-7	28
D406 605 00	8-7	30-2	D407 873 00	15-10	8	D408 403 00	8-7[A]	28
D406 605 00	8-7[A]	30-2	D407 886 00	8-7[A]	7	D408 403 00	15-10	28
D406 606 00	8-7	30-3	D407 886 00	15-10[A]	7	D408 403 00	15-10[A]	28
D406 606 00	8-7[A]	30-3	D407 943 00	8-7	25	D408 404 00	8-7	1
D406 607 00	8-7[A]	30-4	D407 943 00	8-7[A]	25	D408 404 00	15-10	1
D406 608 00	8-7	30-4	D407 943 00	15-10	25	D408 410 00	8-7[A]	1
D406 609 00	8-7	31	D407 943 00	15-10[A]	25	D408 410 00	15-10[A]	1
D406 609 00	8-7[A]	31	D407 963 00	9-2	36	D408 413 00	8-7	2
D406 610 00	8-7	32	D407 964 00	9-2	37	D408 413 00	15-10	2
D406 622 00	15-10	30	D407 965 00	9-2	31	D408 419 00	8-7[A]	2
D406 622 00	15-10[A]	30	D407 966 00	9-2	40	D408 419 00	15-10[A]	2
D406 623 00	15-10	30-1	D407 967 00	9-2	41	D408 424 00	8-7[A]	9
D406 623 00	15-10[A]	30-1	D407 968 00	9-2	42	D408 424 00	15-10[A]	9
D406 624 00	15-10	30-2	D408 224 00	8-7	34	D408 643 00	9-2	48
D406 624 00	15-10[A]	30-2	D408 224 00	15-10	34	D408 653 00	8-7	22
D406 625 00	15-10	30-3	D408 281 00	6-2	42	D408 653 00	8-7[A]	21
D406 625 00	15-10[A]	30-3	D408 285 00	9-2	35	D408 653 00	15-10	22
D406 626 00	15-10[A]	30-4	D408 292 00	9-1	42	D408 653 00	15-10[A]	21
D406 627 00	15-10	30-4	D408 292 00	9-1[A]	40	D408 738 00	8-7	33
D406 628 00	15-10	31	D408 313 00	8-7	6	D408 738 00	15-10	33
D406 628 00	15-10[A]	31	D408 313 00	15-10	6	D415 525 00	2-1	15

https://truckmanualshub.com/

部品番号順索引

PARTS INDEX

PARTS No.	Sh No.	KEY No.	PARTS No.	Sh No.	KEY No.	PARTS No.	Sh No.	KEY No.
D416 701 00	15-11	1	D419 218 00	7-4[A]	10	D419 670 00	4-3	33
D416 915 00	15-1	50	D419 229 00	9-2	13	D419 672 00	9-2	13
D418 139 00	6-2	44	D419 230 00	9-2	4	D419 675 00	6-1	19
D418 190 00	6-2	14	D419 253 00	7-4	23	D419 676 00	6-1	14
D418 302 00	6-2	12	D419 260 00	7-1	4	D419 686 00	6-4[A]	3
D418 453 00	11-4	10	D419 261 00	7-1	5	D419 687 00	7-1	6
D418 455 00	15-5	2	D419 264 00	7-2	3	D419 687 00	7-1[A]	6
D418 564 00	8-2	40	D419 264 00	7-2[A]	3	D419 691 00	7-2[A]	25
D418 583 00	4-4[B]	69	D419 278 00	2-1	3	D419 697 00	6-1	24
D418 625 00	11-2	1	D419 280 00	2-1	2	D419 698 00	6-1	28
D418 630 00	15-14	3	D419 281 00	4-4	13	D419 815 00	9-1[A]	44
D418 632 00	15-14	2	D419 281 00	4-4[A]	13	D419 816 00	7-2[A]	25
D418 635 00	6-4	9	D419 281 00	4-4[B]	13	D430 286 00	4-1	21
D418 688 00	15-13	2	D419 285 00	6-1	19	D433 496 00	7-4	12
D418 689 00	15-13	3	D419 286 00	6-3	22	D433 496 00	7-4[A]	12
D418 812 00	15-1	12	D419 287 00	4-1	26	D433 503 00	6-4[A]	21
D418 812 00	15-3	10	D419 288 00	9-1	8	D433 504 00	7-4	18
D418 813 00	15-1	13	D419 288 00	9-1[A]	8	D433 504 00	7-4[A]	18
D418 813 00	15-3	11	D419 290 00	8-2	15	D433 510 00	4-1	24
D418 815 00	15-3	35	D419 308 00	6-2	11	D448 005 00	8-4[A]	1
D418 836 00	7-4	9	D419 310 00	4-3	1	D455 372 00	12-1	2
D418 836 00	7-4[A]	9	D419 311 00	4-3	3	D458 054 00	8-1	1
D418 847 00	7-1	46	D419 315 00	9-1	46	D458 055 00	8-1	25
D418 847 00	7-1[A]	57	D419 342 00	6-1	24	D458 056 00	8-1	26
D418 899 00	7-2	2	D419 343 00	6-1	28	D458 071 00	8-2	12
D418 899 00	7-2[A]	2	D419 344 00	8-5	3	D458 149 00	15-9	3
D418 907 00	8-1	2	D419 360 00	6-1	14	D458 149 00	15-9[A]	3
D418 908 00	8-1	3	D419 446 00	9-1	29	D458 194 00	1-1	8
D418 909 00	8-1	4	D419 446 00	9-1[A]	28	D458 195 00	8-1	16
D418 910 00	8-1	5	D419 451 00	8-2	15	D458 236 00	8-2	35
D418 927 00	8-2	14	D419 472 00	15-9	2	D458 270 00	9-1	1
D418 929 00	4-4	11	D419 472 00	15-9[A]	2	D458 270 00	9-1[A]	1
D418 929 00	4-4[A]	11	D419 477 00	9-2	45	D458 283 00	8-1	28
D418 929 00	4-4[B]	11	D419 510 00	7-1[A]	5	D458 284 00	8-1	29
D418 930 00	4-4	12	D419 511 00	7-1[A]	4	D458 285 00	8-1	30
D418 930 00	4-4[A]	12	D419 519 00	9-1[A]	44	D458 286 00	8-1	31
D418 930 00	4-4[B]	12	D419 542 00	8-1	2	D458 301 00	8-1	30
D418 941 00	8-1	17	D419 547 00	15-2	20	D458 435 00	8-2	41
D418 969 00	8-2	30	D419 551 00	6-1	19	D458 437 00	11-4	25
D418 970 00	8-2	30	D419 580 00	9-2	4	D458 438 00	11-1	16
D419 122 00	4-4	67	D419 641 00	4-3	1	D458 443 00	11-4	26
D419 131 00	15-2	20	D419 656 00	4-4[B]	69	D458 454 00	8-1	32
D419 133 00	15-1	36	D419 661 00	6-4[A]	2	D458 456 00	7-1	7
D419 161 00	15-14	5	D419 665 00	7-4[A]	24	D458 456 00	7-1[A]	7
D419 218 00	7-4	10	D419 668 00	7-4[A]	23	D458 457 00	7-1	8

https://truckmanualshub.com/

部品番号順索引

PARTS INDEX

PARTS No.	Sh No.	KEY No.	PARTS No.	Sh No.	KEY No.	PARTS No.	Sh No.	KEY No.
D458 458 00	7-1	35	D493 495 00	7-1	50	D493 675 00	8-3	4
D458 458 00	7-1[A]	35	D493 495 00	7-1[A]	61	D493 679 00	8-3	26
D458 461 00	8-2	42	D493 506 00	8-3	1	D493 680 00	8-3	27
D458 514 00	8-2	49	D493 511 00	8-3	5	D493 721 00	8-3	30
D458 515 00	8-2	49-1	D493 512 00	8-3	6	D493 726 00	7-1	58
D458 579 00	7-1	8	D493 513 00	8-3	7	D493 726 00	7-1[A]	68
D458 579 00	7-1[A]	8	D493 514 00	8-3	8	D493 732 00	15-9	21
D458 583 00	8-2	1	D493 520 00	7-1	52	D493 732 00	15-9[A]	20
D458 715 00	8-2	1	D493 520 00	7-1[A]	63	D493 753 01	15-5	10
D465 313 00	9-2	14	D493 524 00	7-1	33	D493 753 02	15-5	9
D465 314 00	9-2	15	D493 524 00	7-1[A]	33	D493 835 00	8-3	18
D465 318 00	6-2	3	D493 525 00	7-1	54	D493 918 00	8-3	34
D465 319 00	6-2	4	D493 525 00	7-1[A]	65	D495 577 00	6-2	32
D465 358 00	15-9	4	D493 537 00	2-1	4	D495 774 00	6-2	13
D465 358 00	15-9[A]	4	D493 538 00	2-1	5	D495 808 00	6-3	12
D465 380 00	9-2	2	D493 540 00	2-1	7	D495 843 00	6-2	49
D465 381 00	9-2	3	D493 551 00	5-6	16	D495 863 00	6-4[A]	15
D469 012 00	7-2	16	D493 552 00	5-6	17	D495 871 00	6-1	12
D469 016 00	7-2[A]	16	D493 553 00	5-6	18	D495 872 00	6-1	13
D470 700 00	8-4[A]	4	D493 626 00	15-9	20	D495 873 00	6-2	32-1
D470 741 00	7-1	2	D493 626 00	15-9[A]	19	D495 874 00	6-4[A]	5
D470 805 00	8-4	1	D493 634 00	8-3	31	D495 880 00	6-1	12
D470 805 00	8-4[A]	3	D493 639 00	8-3	13	D495 881 00	6-1	13
D470 831 00	7-1[A]	2	D493 646 00	2-1	6	D501 057 00	6-1	22
D475 052 00	11-1	17	D493 647 00	7-1	60	D501 058 00	6-1	27
D480 009 00	6-2	43	D493 647 00	7-1[A]	70	D501 059 00	15-1	49
D481 023 00	7-1	9	D493 648 00	7-1	40	D501 075 00	6-3	23
D481 023 00	7-1[A]	9	D493 648 00	7-1[A]	40	D501 076 00	6-1	23
D485 021 00	1-3	12	D493 649 00	7-1	41	D522 280 00	7-1	47
D490 298 00	11-1	7	D493 649 00	7-1[A]	41	D522 280 00	7-1[A]	58
D490 299 00	11-1	5	D493 651 00	7-4	13	D525 004 00	7-2	4-1
D490 300 00	11-1	6	D493 651 00	7-4[A]	13	D525 004 00	7-2[A]	4-1
D493 434 00	8-3	12	D493 652 00	7-1	61	D528 004 00	9-1[A]	37
D493 439 01	15-9	14	D493 652 00	7-1[A]	71	D528 005 00	9-2	18
D493 439 01	15-9[A]	14	D493 653 00	8-3	25	D528 006 00	9-2	19
D493 462 00	8-3	15	D493 654 00	8-3	18	D528 011 04	8-6	5
D493 463 00	8-3	16	D493 664 00	8-3	32	D550 063 00	7-4	7
D493 478 00	8-3	17	D493 666 00	8-3	33	D550 063 00	7-4[A]	7
D493 480 00	8-3	19	D493 669 00	8-3	10	D551 006 01	8-2	38
D493 481 00	8-3	20	D493 670 00	8-3	9	D551 006 02	8-2	39
D493 482 00	8-3	21	D493 671 00	8-3	2	D551 007 01	8-3	14
D493 483 00	8-3	22	D493 672 00	7-1	53	D551 009 04	8-2	47
D493 484 00	8-3	23	D493 672 00	7-1[A]	64	D551 009 05	8-2	48
D493 488 00	7-1	51	D493 673 00	8-3	3	D551 009 06	8-3	28
D493 488 00	7-1[A]	62	D493 674 00	8-3	11	D551 009 07	8-3	29

https://truckmanualshub.com/

部品番号順索引

PARTS INDEX

PARTS No.	Sh No.	KEY No.	PARTS No.	Sh No.	KEY No.	PARTS No.	Sh No.	KEY No.
D580 160 00	11-4	27	E3858 71610	0-0	33	F355 195 00	8-3	0
D580 169 00	4-3	4	E3858 71610	9-1	47	F355 211 00	8-4	0
D580 170 00	4-3	34	F300 223 00	1-1	19	F355 221 00	8-4	0-1
D580 182 00	7-1	49	F300 223 00	1-5	0	F355 290 00	15-9[A]	0
D580 182 00	7-1[A]	60	F300 360 00	1-3	20	F355 298 00	8-4[A]	0
D580 183 00	4-3	5	F300 361 00	1-3	20-1	F355 303 00	8-5	0-1
D581 191 00	8-5	1	F300 361 01	1-4	0	F355 304 00	8-5	0-2
D581 203 00	8-5	1-1	F300 380 01	1-3	10	F355 305 00	8-5	0-3
D581 204 00	8-5	1-2	F301 020 00	12-1	0	F355 306 00	8-5	0
D581 205 00	8-5	1-3	F311 389 00	2-1	0	F355 307 00	15-9	0
D584 142 00	7-2	1	F320 256 00	2-1	0-1	F355 311 00	8-1	0
D584 145 00	7-2[A]	1	F320 266 00	3-1	0	F355 311 00	8-2	0
D592 161 00	15-12	1	F330 679 00	7-3	0	F361 705 00	6-4	0
D592 194 03	9-1	14	F330 723 00	7-1[A]	0	F361 706 00	9-2	0
D592 194 03	9-1[A]	14	F330 723 00	7-2[A]	0	F361 718 00	8-3	0-1
D592 195 01	9-1	15	F330 725 00	7-3[A]	0	F361 754 00	6-4[A]	0
D592 195 01	9-1[A]	15	F330 729 00	7-1	0	F361 758 00	9-2	0-1
D592 206 00	9-2	38	F330 729 00	7-2	0	F361 759 00	6-1	0-1
D592 286 00	9-1	12	F337 317 00	7-4	0	F361 759 00	6-2	0
D592 290 00	6-2	39	F337 317 00	7-4[A]	0	F361 759 00	6-3	0-1
D592 309 00	15-9	22	F337 329 00	7-4[A]	0-1	F361 759 00	8-1	0-1
D592 309 00	15-9[A]	21	F337 332 00	7-4	0-1	F361 759 00	8-2	0-1
D592 409 00	9-1[A]	12	F342 638 00	5-6	0	F361 791 00	9-2	0-1
D592 432 00	9-1	40	F342 675 00	15-4	0	F366 792 00	15-13	0
D592 432 00	9-1[A]	38	F342 756 00	4-1	0	F366 887 00	9-1	0-2
D592 436 00	15-5	16	F342 756 00	4-2	0	F366 887 00	9-1[A]	0-2
D592 518 00	15-12	1	F342 756 00	4-3	0	F366 945 00	9-1	0
E0801 09108	0-0	36	F342 756 00	11-4	0-1	F366 949 00	9-1[A]	0
E13030 6310	7-4	48	F342 756 00	12-2	0-1	F373 216 00	8-3	0-2
E1305 06240	0-0	31	F342 766 00	4-4	0	F373 234 00	8-6	0
E13050 6240	7-4	49	F342 766 00	4-4[A]	0	F377 839 00	8-7	0
E1314 16150	0-0	37	F342 766 00	4-4[B]	0	F377 839 00	8-7[A]	0
E1405 17020	0-0	30	F342 766 00	6-1	0	F377 840 00	15-10	0
E1452 06061	0-0	38	F342 766 00	6-3	0	F377 840 00	15-10[A]	0
E1852 06332	0-0	39	F342 771 00	15-1	0	F377 854 00	8-7	0-1
E1852 06410	0-0	35	F342 771 00	15-2	0	F377 854 00	8-7[A]	0-1
E1852 06410	9-1	50	F342 771 00	15-3	0	F377 855 00	15-10	0-1
E1852 06480	0-0	34	F342 789 00	1-7	0	F377 855 00	15-10[A]	0-1
E1852 06480	9-1	49	F342 795 00	11-4	0	F377 856 00	8-7	0-2
E1852 46330	0-0	40	F353 206 00	8-5	0-4	F377 856 00	15-10	0-2
E1853 56010	0-0	32	F354 810 00	15-6	1	F385 402 00	15-14	0
E1853 56010	9-1	51	F355 037 00	15-11	0	F388 040 01	11-3	0-7
E31055 0130	7-1	62	F355 103 00	9-1	0-1	F388 220 01	11-3	0
E3607 20060	0-0	29	F355 103 00	9-1[A]	0-1	F388 220 02	11-3	0-2
E36072 0060	7-4	48-1	F355 182 00	15-5	0	F388 220 03	11-3	0-3

https://truckmanualshub.com/

部品番号順索引

PARTS INDEX

PARTS No.	Sh No.	KEY No.
F388 220 04	11-3	0-4
F388 221 01	11-3	0-1
F388 222 02	11-3	0-5
F388 223 02	11-3	0-6
F388 392 00	4-3	0-1
F388 392 00	11-2	0
F388 418 00	11-1	0
F432 331 00	15-12	0
K04724 00160	7-1[A]	73
K04814 00150	7-1[A]	76
K04814 50600	7-1[A]	77
K15221 43170	0-0	43
K15221 43170	7-4[A]	50
K15313 12370	7-2[A]	35
K15321 73016	0-0	48
K15694 65992	0-0	45
K15694 65992	9-1[A]	49
K16282 97013	0-0	47
K16414 32434	0-0	41
K16414 32434	7-1[A]	78
K17208 60016	0-0	49
K17490 42360	7-4[A]	52
K19420 32291	7-1[A]	75
K19420 32610	7-1[A]	74
K19420 37202	7-1[A]	83
K1K574 60221	0-0	46
K1K574 60221	9-1[A]	50
KEG661 72401	7-1[A]	72
KHH160 32093	0-0	42
KR1401 51352	0-0	44
KR1401 51352	7-4[A]	51
ZG00351	0-0	55
ZG00352	0-0	55-1
ZG00353	0-0	55-2
ZG10100	0-0	53
D013 482 00	11-1	44
D013 483 00	11-1	45
D070 600 01	7-1[A]	47
D070 600 02	7-1[A]	48
F342 789 00	12-2	0

https://truckmanualshub.com/

[Memo]

IHI