https://truckmanualshub.com/

PREFACE

1. This parts catalog covers the parts of clawler back-hoe Model B17-2 for AMMAN.

Issue No. : 000Y00S3390

Date of Issue : Jan,. 1994

2. The codes of parts to be procured locally 172180- ○○○○○.

3. The mounted engine of model is 3TNE68L-UBD(Q19265A,U2B).

はじめに

1．本パーツカタログは、B17－2のアンマンヤンマー社向けのクローラバックホーを展開しております。

パーツカタログNo.：000Y00S3390

発行時期：1994年1月

2．現地調達部品コードは172180－○○○○○です。

3．搭載エンジンは、3TNE68L－UBD（Q19265A，U2B）です。

4．機種コード

形　　式	機種コード	形　　式	機種コード
B17-2 CR AY	172180A	B17-2 PR AY	172180B
B17-2 C AY	172180C	B17-2 P AY	172180D

https://truckmanualshub.com/

SPECIFICATIONS

Name			YANMAR CRAWLER BACHOE	
Model			B17-2-P[R]	B17-2-C[R]
Engine	Model		3TNE68L-UBD	
	Type		Vertical 3-cylinder water-cooled diesel	
Dimensions	Transport length	mm	3680	
	Transport width	mm	1000	
	Transport height	mm	2210	2280
Std. bucket capacity		m³	0.045	
Std. bucket width(Outside)		mm	450	
Max. digging depth		mm	2100(2200Blade)	
Max. cutting height		mm	3420	
Max. dump height		mm	2420	
Max. reach at ground level		mm	3550	
Min. swing radius		mm	1540(Right Swing 1120)	
Boom swing angle		degree	Left 50 • Right 90	
Max. digging force(Std. bucket)		kgf	1160	
Travel speed(High/Low)		km/h	4.1/2.1	
Gradability		degree	30	
Average ground pressure		kgf/cm²	0.275 [0.261]	0.297[0.284]
Track shoe width(Std.)		mm	230	
Blade	Width × height	mm	1000×300	
	Capacity	m³	0.06	
Machine mass		kg	1460[1400]	1580[1520]

[ ] shows to the specification of rubber crowler.

https://truckmanualshub.com/

塗装色一覧
TABLE OF PAINTED COLOR

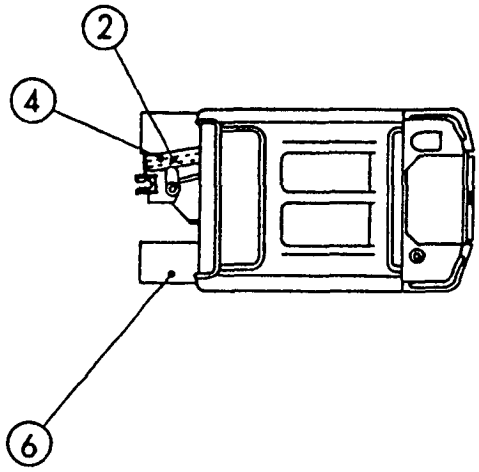

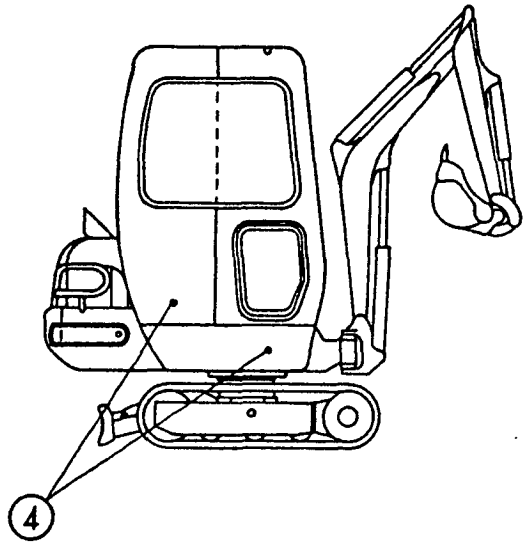

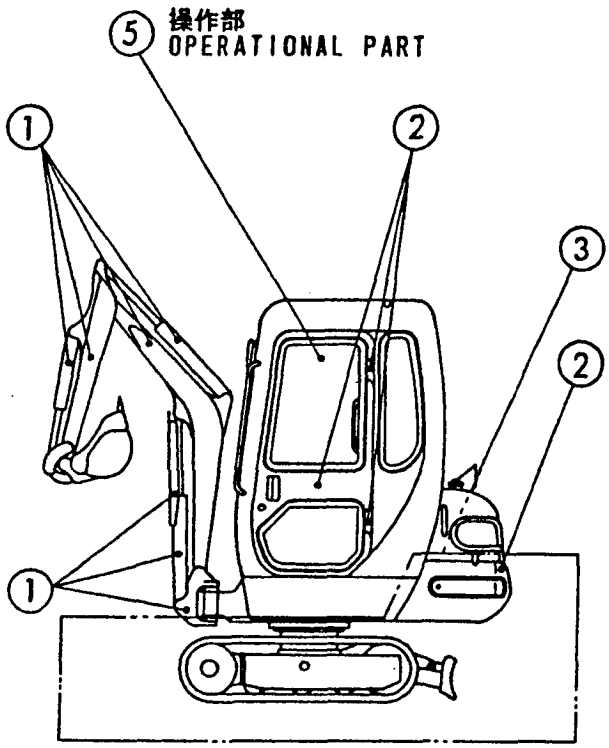

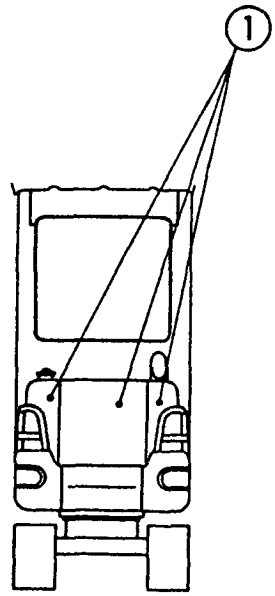

https://truckmanualshub.com/

[Vehicle Painted Color]

Part	Paint Color Munsel No.	Color Division	Paint No.		
			16ℓ Can	4ℓ Can	Spray
①	YANMAR New Permanent Yellow 5.2Y8.5/11	87	981101-09519	977620-40870	977620-30871
②	YANMAR Deep Green 6.3BG2.11/1.76	82	981101-09517	977620-40820	977620-30N31
③	YANMAR New Deep Green 0.6B2.2/4.2	88	981101-09588	977620-40880	977620-30881
④	YANMAR New Grayish Green 2.9BG4.8/3.0	86	981101-09616	977620-40860	977620-30861
⑤	YANMAR Dark Olive Grey 5.39Y2.92/0.78	72	----------	977620-40720	TDR-90460003
⑥	YANMAR Charcoal Gray N2	71	981101-09516	977620-40710	977620-30371

[Kind of painted color]

No.	Part code		Paint color
1	OOOOOO-OOOOO		YANMAR New Permanent Yellow
2	OOOOOO-OOOOO		YANMAR Deep Green
3	OOOOOO-OOOOO	-2	YANMAR New Deep Green
4	OOOOOO-OOOOO		YANMAR New Grayish Green
5	OOOOOO-OOOOO		YANMAR Dark Olive Grey
6	OOOOOO-OOOOO		YANMAR Charcoal Gray

[Effective Machine No.]

00501 ~

https://truckmanualshub.com/

各部の名称 (1)
PARTS NAME (1)

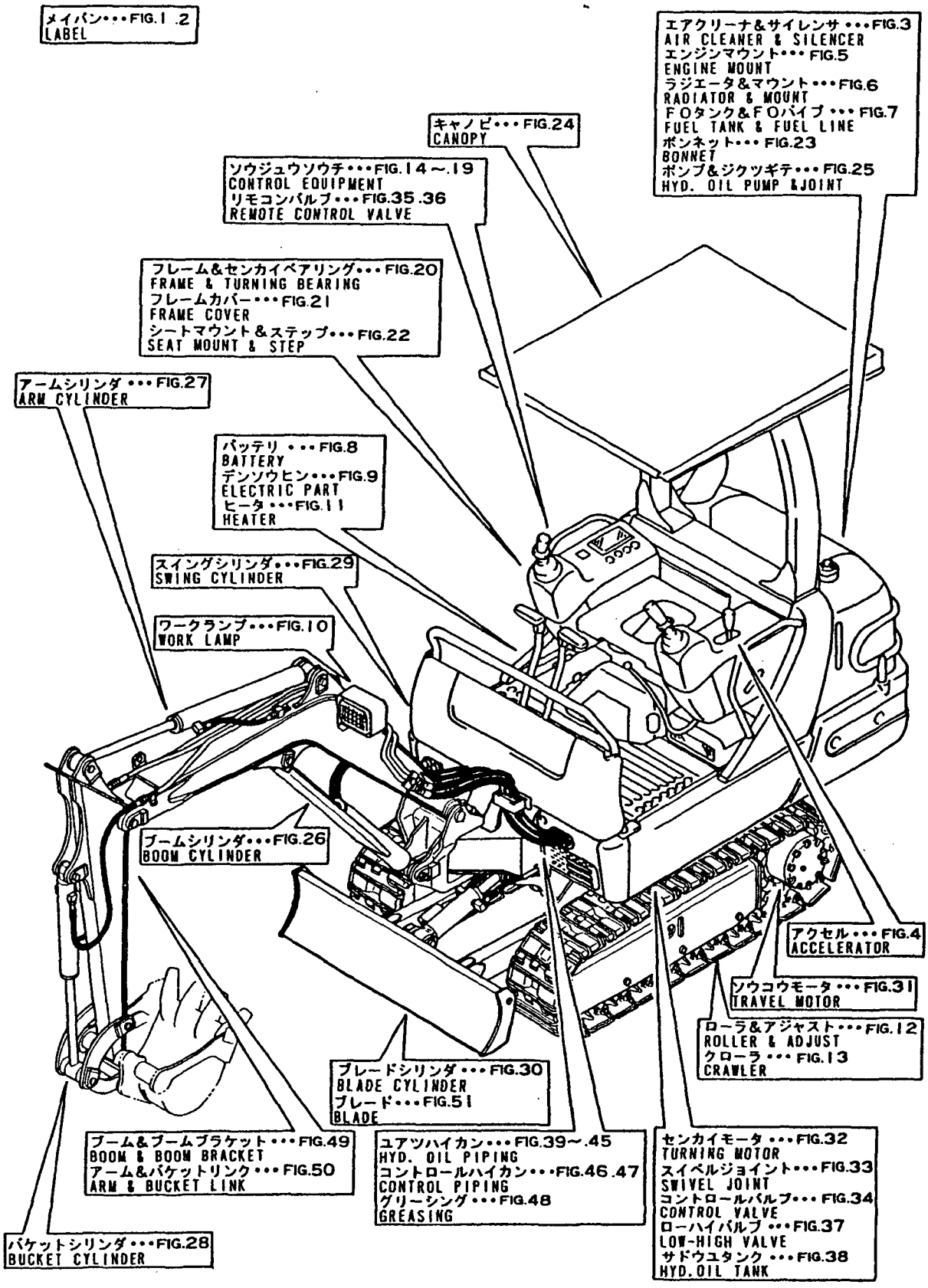

https://truckmanualshub.com/

各部の名称 (2)
PARTS NAME (2)

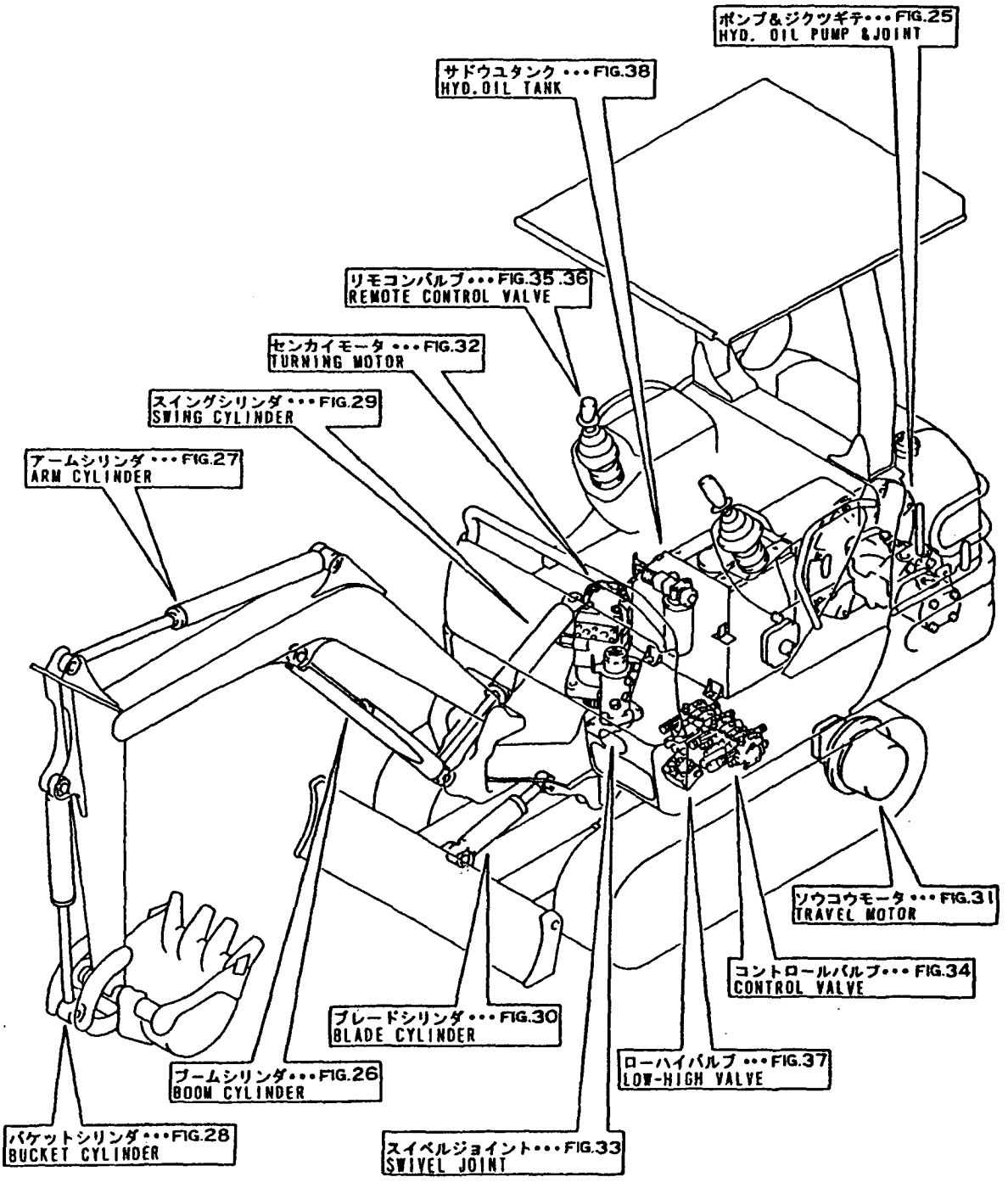

https://truckmanualshub.com/

配線図
WIRING DIAGRAM

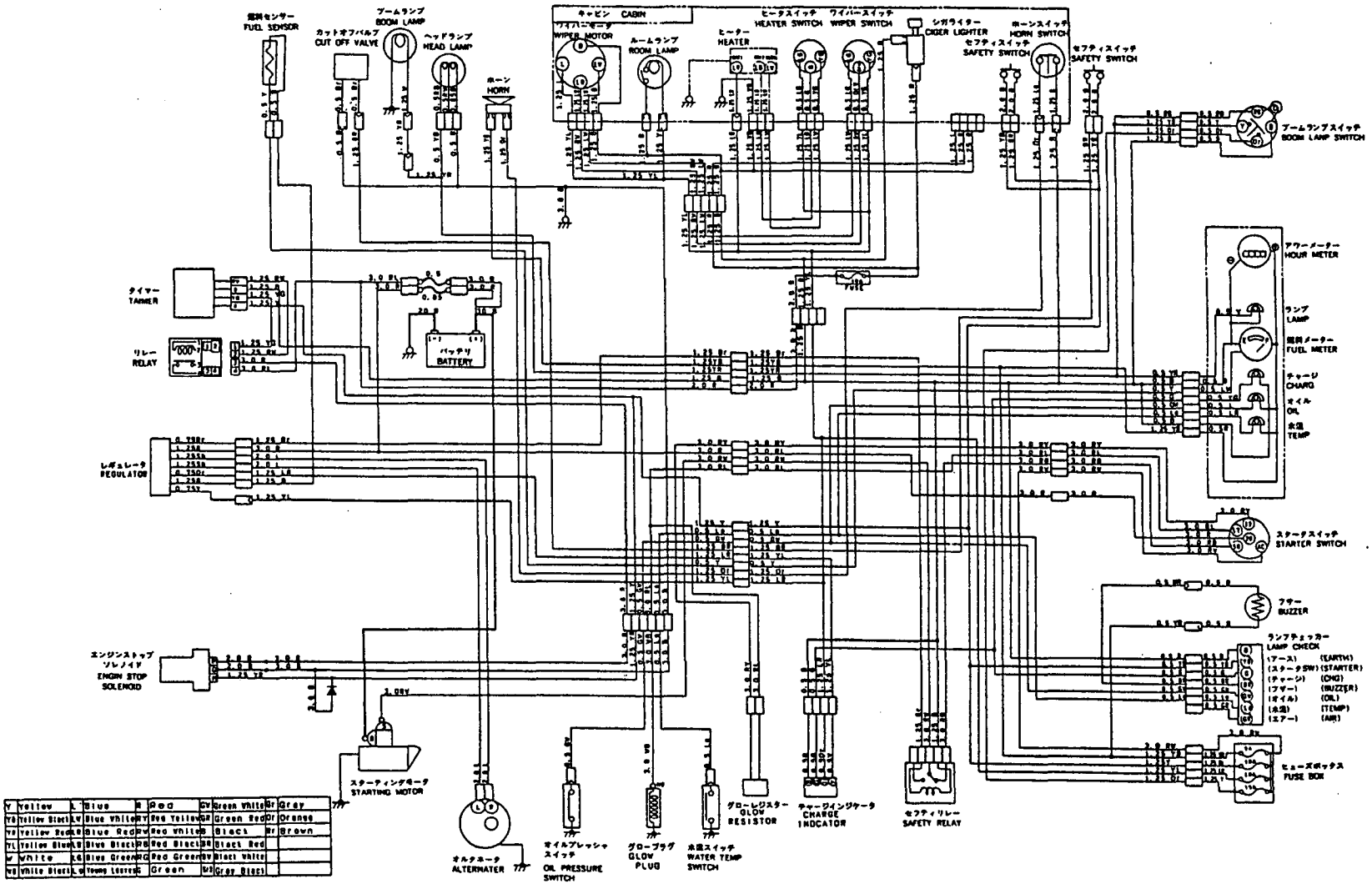

Y	Yellow	L	Blue	R	Red	GW	Green White	Gr	Gray
YB	Yellow Black	LW	Blue White	RY	Red Yellow	GR	Green Red	Or	Orange
YR	Yellow Red	LR	Blue Red	RW	Red White	B	Black	Br	Brown
YL	Yellow Blue	LB	Blue Black	RB	Red Black	BR	Black Red		
W	White	LG	Blue Green	RG	Red Green	BW	Black White		
WB	White Black	LY	Young Leaves	G	Green	GB	Gray Black		

https://truckmanualshub.com/

```
1,1,,772180-03110,,"LABEL SET, CABIN",1,,,,,,,,,,,,,,,,,
2,2,,172180-03110,,"LABEL,SPECIFICATION",1,,,,,,,,,,,,,,,,,,
3,2,,172180-03120,,"LABEL,B17 L.H",1,,,,,,,,,,,,,,,,,
4,2,,172180-03130,,"LABEL,B17 R.H",1,,,,,,,,,,,,,,,,,
5,2,,172180-03140,,"LABEL,OIL & WATER",1,,,,,,,,,,,,,,,,,
6,2,,172179-03160,,"LABEL,SWING LOCK",1,,,,,,,,,,,,,,,,,
7,2,,172179-03170,,"LABEL,REAR YANMAR",1,,,,,,,,,,,,,,,,,
8,2,,172174-03190,,"LABEL,ACCELERATOR",1,,,,,,,,,,,,,,,,,
9,2,,172159-03242,,"LABEL, BOOM",2,,,,,,,,,,,,,,,,,
10,2,,172174-03270,,"LABEL, P.T.O.",1,,,,,,,,,,,,,,,,,
11,2,,172159-03290,,LABEL,1,,,,,,,,,,,,,,,,,
12,2,,172174-03290,,"LABEL,CAB",1,,,,,,,,,,,,,,,,,
13,2,,172174-03330,,"LABEL,GREASE FEED",1,,,,,,,,,,,,,,,,,
14,2,,172159-03340,,"LABEL, OIL FEED",1,,,,,,,,,,,,,,,,,
15,2,,172174-03340,,"LABEL, GREASE",1,,,,,,,,,,,,,,,,,
16,2,,172159-03350,,"LABEL, FUEL",1,,,,,,,,,,,,,,,,,
17,2,,172159-03360,,"LABEL, AIR CLEANER",1,,,,,,,,,,,,,,,,,
18,2,,172161-03360,,"LABEL,STARTER SWITCH",1,,,,,,,,,,,,,,,,,,
19,2,,172174-03360,,"LABEL,PATTERN A",1,,,,,,,,,,,,,,,,,
20,2,,172159-03370,,"LABEL, SUBTANK",1,,,,,,,,,,,,,,,,,
21,2,,172174-03380,,LABEL,1,,,,,,,,,,,,,,,,,
22,2,,172159-03390,,"LABEL, ANTI-FREEZING",1,,,,,,,,,,,,,,,,,
23,2,,172159-03450,,LABEL,1,,,,,,,,,,,,,,,,,
24,2,,172174-03550,,"LABEL,HEATER SWITCH",1,,,,,,,,,,,,,,,,,
25,2,,172174-03560,,"LABEL,WIPER SWITCH",1,,,,,,,,,,,,,,,,,
26,2,,172174-03600,,LABEL,1,,,,,,,,,,,,,,,,,
27,2,,172174-03630,,LABEL,2,,,,,,,,,,,,,,,,,
28,2,,172174-03640,,"LABEL,TRANSPORT",1,,,,,,,,,,,,,,,,,
29,2,,172174-03650,,"LABEL,GREASE CYL.",2,,,,,,,,,,,,,,,,,
30,2,,172174-03660,,"LABEL,CABLE",1,,,,,,,,,,,,,,,,,
31,2,,172174-03670,,"LABEL,NEUTRAL",1,,,,,,,,,,,,,,,,,
32,2,,172174-03680,,"LABEL,SWING AREA",1,,,,,,,,,,,,,,,,,
33,2,,172174-03690,,"LABEL,RADIATOR",1,,,,,,,,,,,,,,,,,
34,2,,172174-03700,,LABEL,1,,,,,,,,,,,,,,,,,
35,2,,172174-03710,,LABEL,1,,,,,,,,,,,,,,,,,
36,2,,22857-300050,,"SCREW 3X 5",4,,,,,,,,,,,,,,,,,
37,2,,172174-03570,,"LABEL,DANGER",1,,,,,,,,,,,,,,,,,
```

Fig. 1 メイバン（キャビン） LABEL (CABIN)

https://truckmanualshub.com/

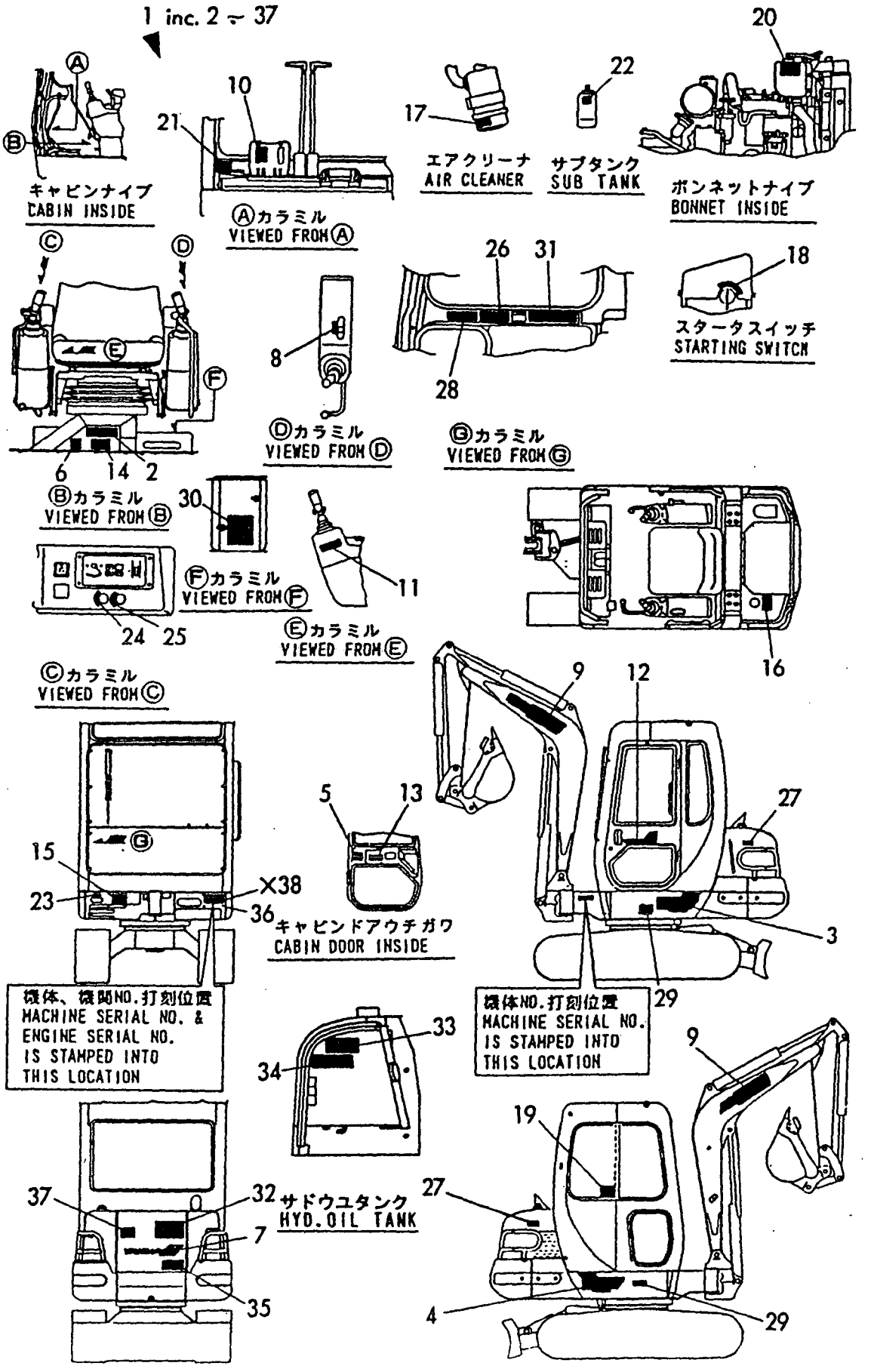

https://truckmanualshub.com/

```
1,1,,772180-03100,,"LABEL SET, CANOPY",,1,,,,,,,,,,,,,,,
2,2,,172180-03110,,"LABEL,SPECIFICATION",,1,,,,,,,,,,,,,,,,
3,2,,172180-03120,,"LABEL,B17 L.H",,1,,,,,,,,,,,,,,,
4,2,,172180-03130,,"LABEL,B17 R.H",,1,,,,,,,,,,,,,,,
5,2,,172174-03140,,"LABEL,FRONT",,1,,,,,,,,,,,,,,,
6,2,,172180-03140,,"LABEL,OIL & WATER",,1,,,,,,,,,,,,,,,,
7,2,,172179-03160,,"LABEL,SWING LOCK",,1,,,,,,,,,,,,,,,
8,2,,172179-03170,,"LABEL,REAR YANMAR",,1,,,,,,,,,,,,,,,,
9,2,,172174-03190,,"LABEL,ACCELERATOR",,1,,,,,,,,,,,,,,,,
10,2,,172159-03242,,"LABEL, BOOM",,2,,,,,,,,,,,,,,,
11,2,,172174-03270,,"LABEL, P.T.O.",,1,,,,,,,,,,,,,,,
12,2,,172159-03290,,LABEL,,1,,,,,,,,,,,,,,,
13,2,,172174-03330,,"LABEL,GREASE FEED",,1,,,,,,,,,,,,,,,,
14,2,,172159-03340,,"LABEL, OIL FEED",,1,,,,,,,,,,,,,,,
15,2,,172174-03340,,"LABEL, GREASE",,1,,,,,,,,,,,,,,,
16,2,,172159-03350,,"LABEL, FUEL",,1,,,,,,,,,,,,,,,
17,2,,172159-03360,,"LABEL, AIR CLEANER",,1,,,,,,,,,,,,,,,,
18,2,,172161-03360,,"LABEL,STARTER SWITCH",,1,,,,,,,,,,,,,,,,,
19,2,,172159-03370,,"LABEL, SUBTANK",,1,,,,,,,,,,,,,,,
20,2,,172174-03370,,"LABEL,PATTERN A",,1,,,,,,,,,,,,,,,,
21,2,,172174-03380,,LABEL,,1,,,,,,,,,,,,,,,
22,2,,172159-03390,,"LABEL, ANTI-FREEZING",,1,,,,,,,,,,,,,,,,
23,2,,172159-03450,,LABEL,,1,,,,,,,,,,,,,,,
24,2,,172174-03600,,LABEL,,1,,,,,,,,,,,,,,,
25,2,,172174-03630,,LABEL,,2,,,,,,,,,,,,,,,
26,2,,172174-03640,,"LABEL,TRANSPORT",,1,,,,,,,,,,,,,,,
27,2,,172174-03650,,"LABEL,GREASE CYL.",,2,,,,,,,,,,,,,,,
28,2,,172174-03660,,"LABEL,CABLE",,1,,,,,,,,,,,,,,,
29,2,,172174-03670,,"LABEL,NEUTRAL",,1,,,,,,,,,,,,,,,
30,2,,172174-03680,,"LABEL,SWING AREA",,1,,,,,,,,,,,,,,,
31,2,,172174-03690,,"LABEL,RADIATOR",,1,,,,,,,,,,,,,,,
32,2,,172174-03700,,LABEL,,1,,,,,,,,,,,,,,,
33,2,,172174-03710,,LABEL,,1,,,,,,,,,,,,,,,
34,2,,22857-300050,,"SCREW 3X 5",,4,,,,,,,,,,,,,,,
35,2,,172174-03570,,"LABEL,DANGER",,1,,,,,,,,,,,,,,,
```

Fig. 2 メイバン（キャノピ） LABEL (CANOPY)

https://truckmanualshub.com/

1 inc. 2 ~ 35

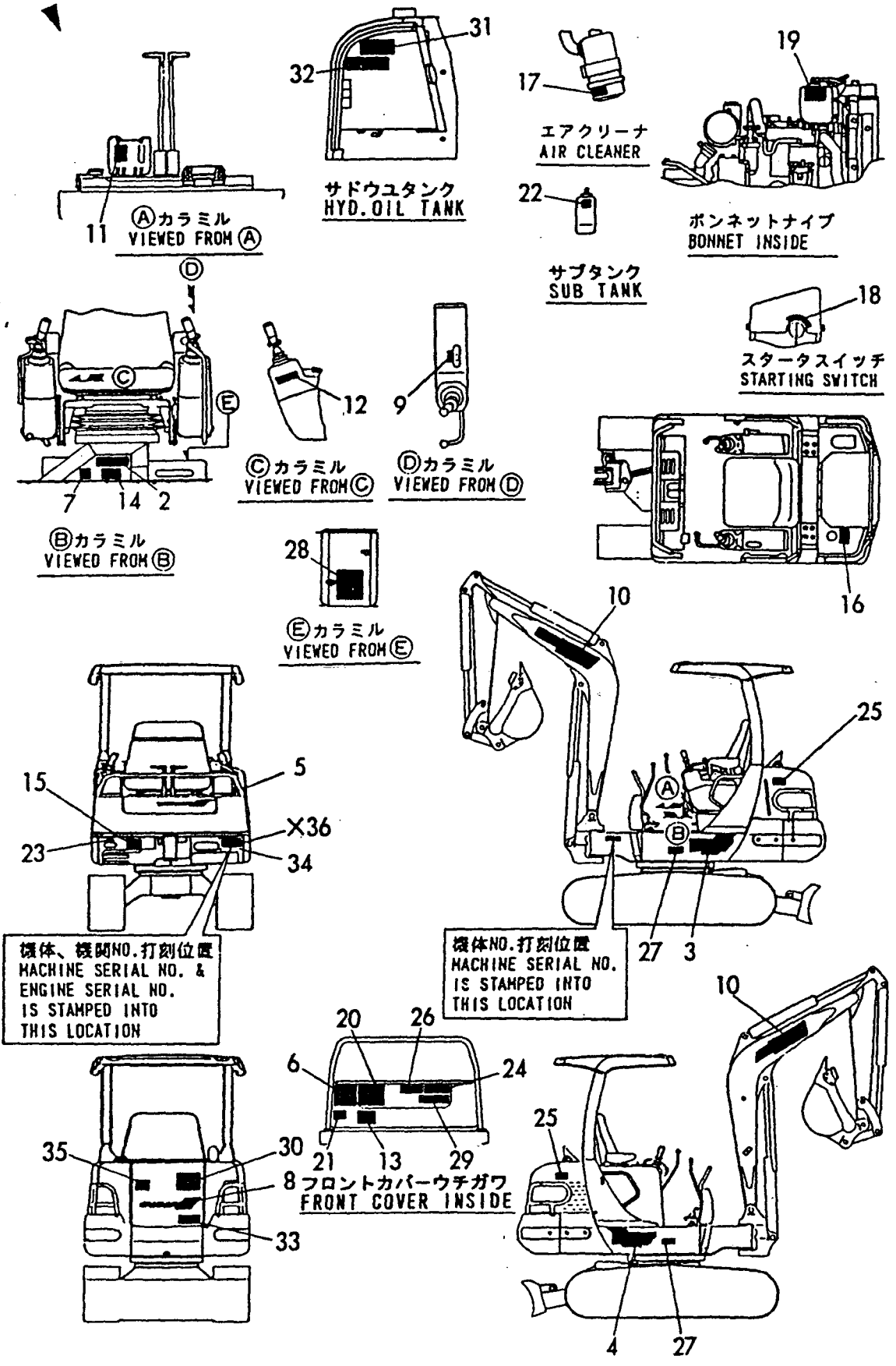

https://truckmanualshub.com/

```
1,1,,172179-11300,,"EXHAUST,SILENCER",1,1,,,,,,,,,,,,,,,,
2,1,,172179-11360,,"SUPPORT B,SILENCER",1,1,,,,,,,,,,,,,,,,
3,1,,124701-11911,,"GASKET, (NON-ASB.)",1,1,,,,,,,,,,,,,,,,
4,1,,172179-11310,,SILENCER,1,1,,,,,,,,,,,,,,,,
5,1,,119831-13580,,CLAMP,1,1,,,,,,,,,,,,,,,,
6,1,,22117-080000,,"WASHER  8",1,1,,,,,,,,,,,,,,,,
7,1,,22217-080000,,"SPRING WASHER  8",1,1,,,,,,,,,,,,,,,,
8,1,,22217-080000,,"SPRING WASHER  8",4,4,,,,,,,,,,,,,,,,
9,1,,26013-080202,,"BOLT W/WASHER M8X20",4,4,,,,,,,,,,,,,,,,
10,1,,26106-080552,,"BOLT M 8X 55 PLATED",1,1,,,,,,,,,,,,,,,,
11,1,,26706-080002,,"NUT M 8",1,1,,,,,,,,,,,,,,,,
12,1,,26716-080002,,"NUT M 8",4,4,,,,,,,,,,,,,,,,
13,1,,172179-11500,,"HOSE,AIR CLEANER",1,1,,,,,,,,,,,,,,,,
14,1,,172179-11510,,"HOSE,AIR INTAKE",1,1,,,,,,,,,,,,,,,,
15,1,,172179-11550,,"SUPPORT,AIR CLEANER",1,1,,,,,,,,,,,,,,,,
16,1,,119253-12500,,"CLEANER, AIR",1,1,,,,,,,,,,,,,,,,
17,2,,121024-12660,,"PAN ASSY, DUST",1,1,,,,,,,,,,,,,,,,
18,2,,121465-12700,,RETAINER,1,1,,,,,,,,,,,,,,,,
19,2,,121465-12510,,"ELEMENT, AIR CLEANER",1,1,,,,,,,,,,,,,,,,
20,2,,124064-12680,,"BOLT, WING",1,1,,,,,,,,,,,,,,,,
21,2,,124064-12690,,WASHER,1,1,,,,,,,,,,,,,,,,
22,1,,172159-45160,,"CLAMP 350",2,2,,,,,,,,,,,,,,,,
23,1,,23000-060000,,"CLAMP 60",3,3,,,,,,,,,,,,,,,,
24,1,,26116-100252,,"BOLT M10X 25 PLATED",4,4,,,,,,,,,,,,,,,,
25,1,,26366-080002,,"NUT M 8",1,1,,,,,,,,,,,,,,,,
26,1,,26716-080002,,"NUT M 8",1,1,,,,,,,,,,,,,,,,
27,1,,22217-100000,,"SPRING WASHER 10",2,2,,,,,,,,,,,,,,,,
```

Fig. 3 エアクリーナ＆サイレンサ AIR CLEANER & SILENCER

https://truckmanualshub.com/

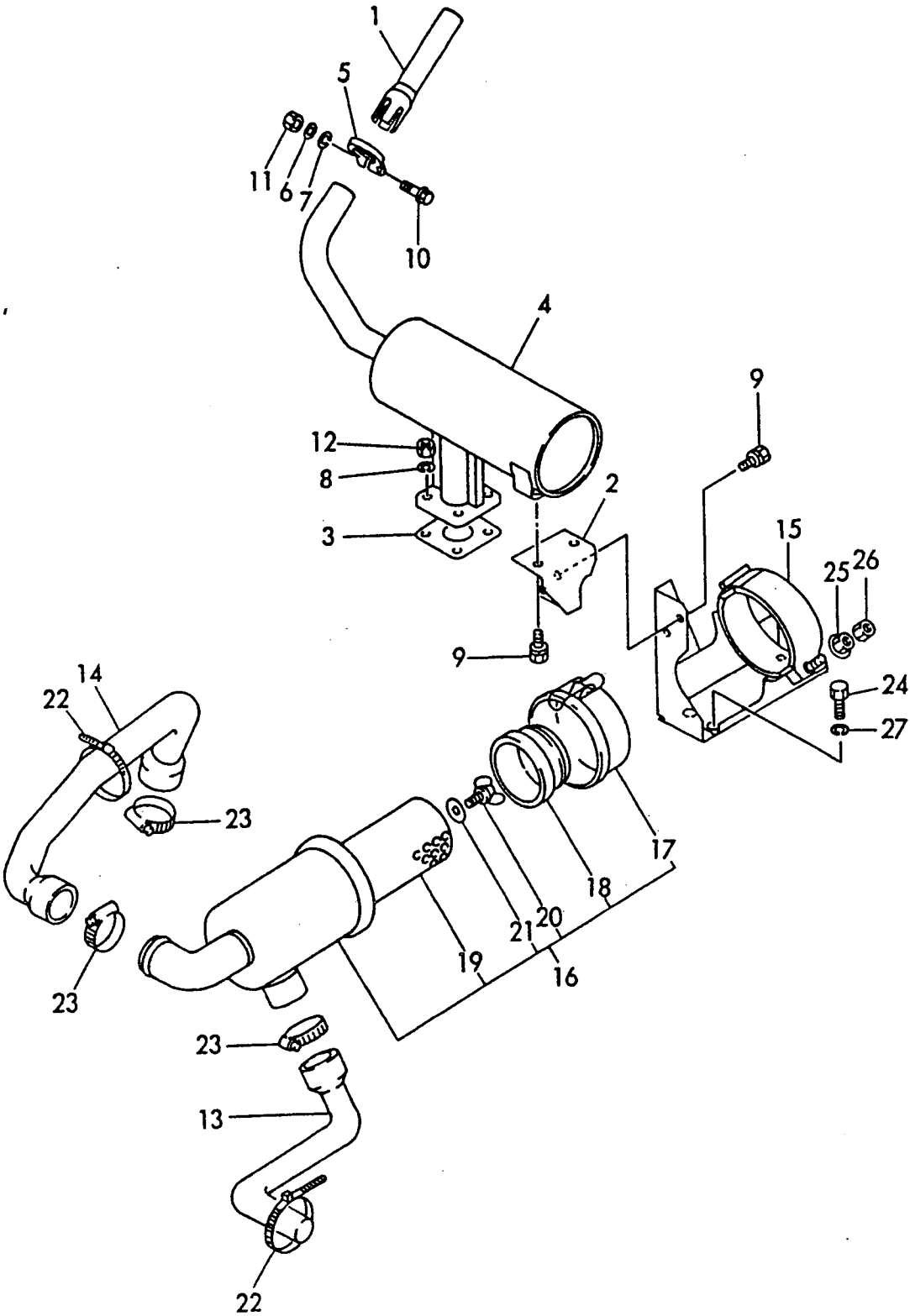

https://truckmanualshub.com/

```
1,1,,172179-12100,,"LEVER,ACCEL",1,1,,,,,,,,,,,,,,,,,
1A,2,,172165-
12140,,GRIP(RED,1,1,,,,,W,,72165500,M20687,72165500,M20687,,,,,,,,,I
2,1,,172179-12110,,"CABLE,ACCEL",1,1,,,,,,,,,,,,,,,,,
3,1,,172159-12270,,"JOINT, CABLE",1,1,,,,,,,,,,,,,,,,,
4,1,,172179-12150,,"BRACKET, ACCEL",1,1,,,,,,,,,,,,,,,,,
5,1,,172159-12520,,"PIN, CABLE",1,1,,,,,,,,,,,,,,,,,
6,1,,172159-42070,,"PIN 6,COME-OFF SNAP",2,2,,,,,,,,,,,,,,,,,
7,1,,172159-12530,,"PIN  6X 17",1,1,,,,,,,,,,,,,,,,,
8,1,,22137-060000,,"WASHER 6, POLISHED",2,2,,,,,,,,,,,,,,,,,
9,1,,22217-080000,,"SPRING WASHER  8",2,2,,,,,,,,,,,,,,,,,
10,1,,26013-100302,,"BOLT M10X 30",2,2,,,,,,,,,,,,,,,,,
11,1,,26116-080202,,"BOLT M 8X 20 PLATED",2,2,,,,,,,,,,,,,,,,,
```

Fig. 4 アクセル
ACCELERATOR https://truckmanualshub.com/

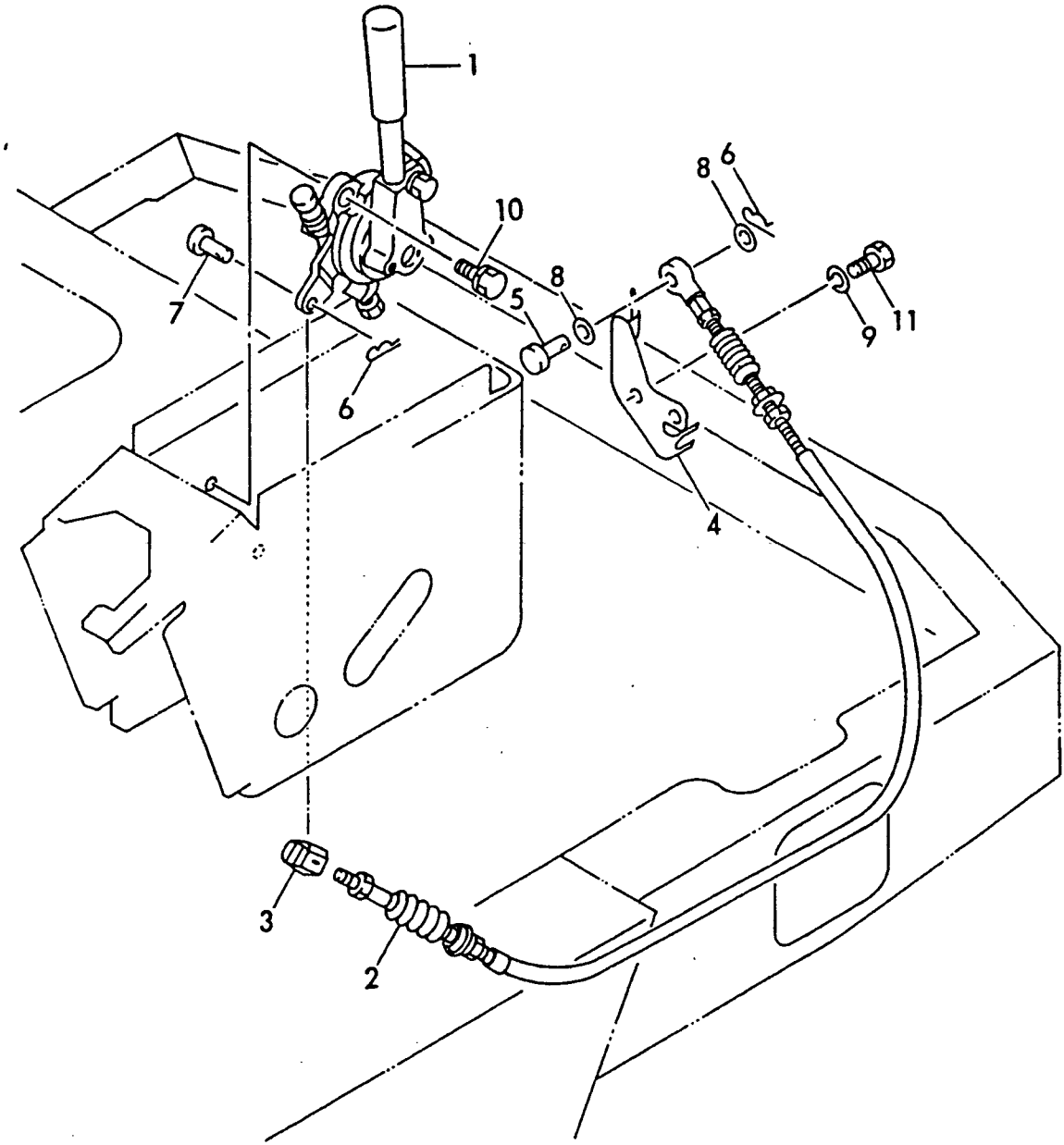

https://truckmanualshub.com/

```
1,1,,172179-13100,,"MOUNT ASSY,ENG",2,2,,,,,,,,,,,,,,,,
2,1,,172179-13150,,"MOUNT ASSY,ENG",2,2,,,,,,,,,,,,,,,,
3,1,,172179-13200,,"STOPPER,ENG",4,4,,,,,,,,,,,,,,,,
4,1,,172179-13210,,CUSHION,4,4,,,,,,,,,,,,,,,,
5,1,,22217-100000,,"SPRING WASHER 10",8,8,,,,,,,,,,,,,,,,
6,1,,26013-100252,,"BOLT W/WASHER M10X25",16,16,,,,,,,,,,,,,,,,,,
7,1,,26716-100002,,"NUT M10",8,8,,,,,,,,,,,,,,,,
8,1,,26013-100202,,"BOLT W/WASHER M10X20",8,8,,,,,,,,,,,,,,,,
```

Fig. 5 エンジンマウント ENGINE MOUNT

https://truckmanualshub.com/

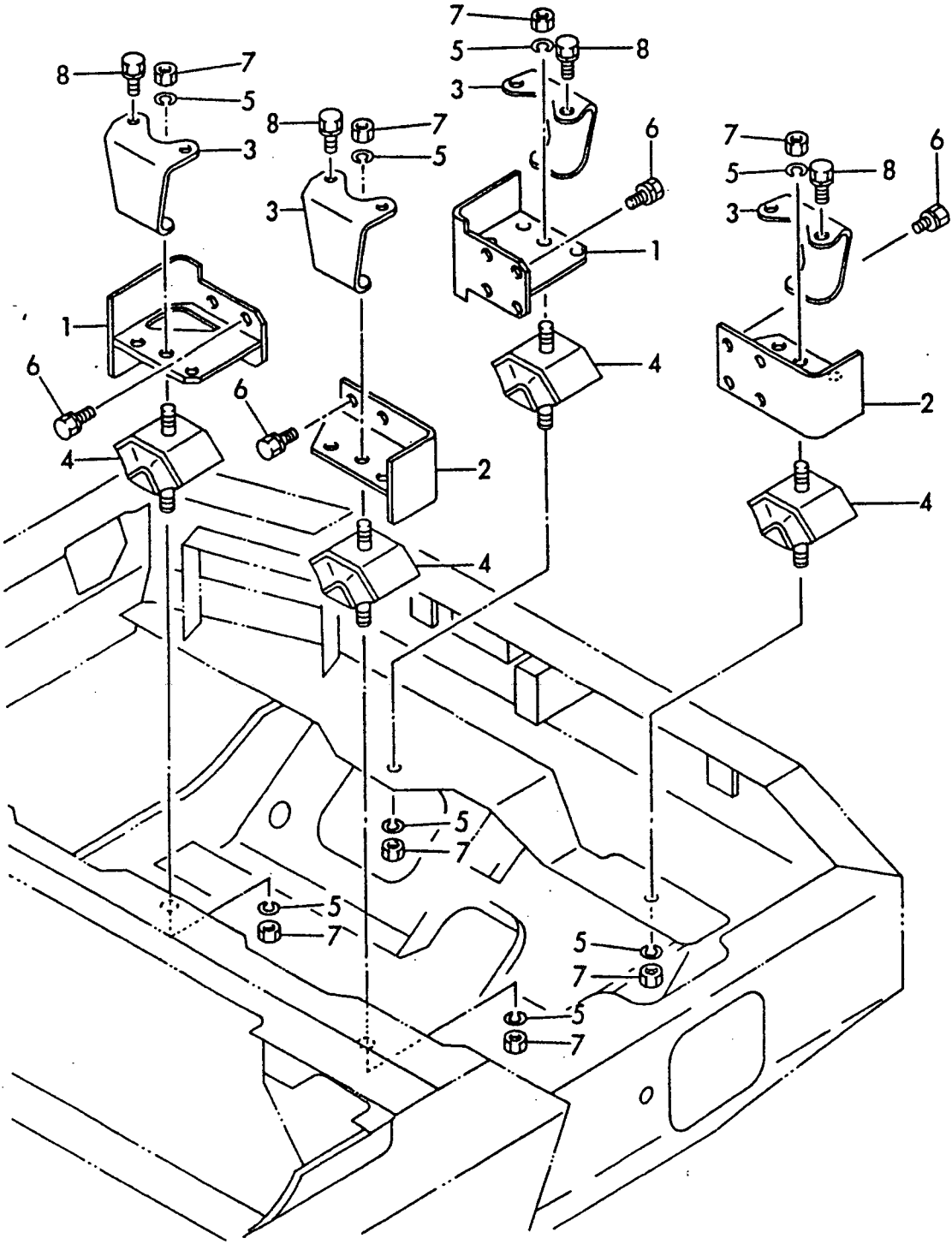

https://truckmanualshub.com/

```
1,1,,172122-13310,,"MOUNT, RADIATOR",4,4,,,,,,,,,,,,,,,
2,1,,172179-13310,,"MOUNT ASSY,RADIATOR",2,2,,,,,,,,,,,,,,,
3,1,,172179-13350,,"PLATE ASSY,RADIATOR",1,1,,,,,,,,,,,,,,,
4,1,,172179-13390,,"PLATE,RADIATOR",1,1,,,,,,,,,,,,,,,
5,1,,172179-13450,,"HOSE 7X480",1,1,,,,,,,,,,,,,,,
6,1,,172179-13470,,"HOSE 7X220 ASSY",1,1,,,,,,,,,,,,,,,
7,1,,172179-13501,,"WIRE NET,FAN",1,1,,,,,,,,,,,,,,,
8,1,,172179-13800,,"C.W.TUBE,UPPER",1,1,,,,,,,,,,,,,,,
9,1,,172179-13850,,C.W.TUBE(LOWER,1,1,,,,,,,,,,,,,,,
10,1,,172179-13300,,RADIATOR,1,1,,,,,,,,,,,,,,,
11,2,,124450-44590,,"CAP, RADIATOR",1,1,,,,,,,,,,,,,,,
12,1,,121468-44510,,"SUB-TANK ASSY",1,1,,,,,,,,,,,,,,,
13,2,,121470-44521,,"BODY,SUB-TANK",1,1,,,,,,,,,,,,,,,
14,2,,121450-44531,,CAP,1,1,,,,,,,,,,,,,,,
15,2,,121468-44540,,"PLUG, SUB-TANK",1,1,,,,,,,,,,,,,,,
16,2,,124450-44560,,CLAMP,1,1,,,,,,,,,,,,,,,
17,2,,121470-44581,,GASKET,1,1,,,,,,,,,,,,,,,
18,2,,23065-070130,,"PIPE  7X 130",1,1,,,,,,,,,,,,,,,
19,1,,121450-49110,,"COCK ASSY, 3-WAY",1,1,,,,,,,,,,,,,,,
21,2,,121250-49121,,PLUG,1,1,,,,,,,,,,,,,,,
22,2,,24311-000160,,"O-RING 1A P-16.0",1,1,,,,,,,,,,,,,,,
23,1,,22137-060000,,"WASHER 6, POLISHED",2,2,,,,,,,,,,,,,,,
24,1,,22217-080000,,"SPRING WASHER  8",3,3,,,,,,,,,,,,,,,
25,1,,23010-016000,,"CLAMP 16",4,4,,,,,,,,,,,,,,,
26,1,,23010-038000,,"CLAMP 38",4,4,,,,,,,,,,,,,,,
27,1,,26013-060202,,"BOLT M 6X 20",2,2,,,,,,,,,,,,,,,
28,1,,26013-080162,,"BOLT W/WASHER M8X16",4,4,,,,,,,,,,,,,,,
29,1,,26013-080162,,"BOLT W/WASHER M8X16",2,2,,,,,,,,,,,,,,,
30,1,,26013-100302,,"BOLT M10X 30",4,4,,,,,,,,,,,,,,,
31,1,,26051-080002,,"NUT M 8",8,8,,,,,,,,,,,,,,,
32,1,,26116-080122,,"BOLT M 8X 12 PLATED",3,3,,,,,,,,,,,,,,,
33,1,,26716-080002,,"NUT M 8",1,1,,,,,,,,,,,,,,,
34,1,,22217-100000,,"SPRING WASHER 10",1,1,,,,,,,,,,,,,,,
35,1,,26116-100122,,"BOLT M10X 12 PLATED",1,1,,,,,,,,,,,,,,,
36,1,,172174-16540,,"CLAMP 10X70",1,1,,,,,,,,,,,,,,,
```

Fig. 6 ラジエータ＆マウント RADIATOR & MOUNT

https://truckmanualshub.com/

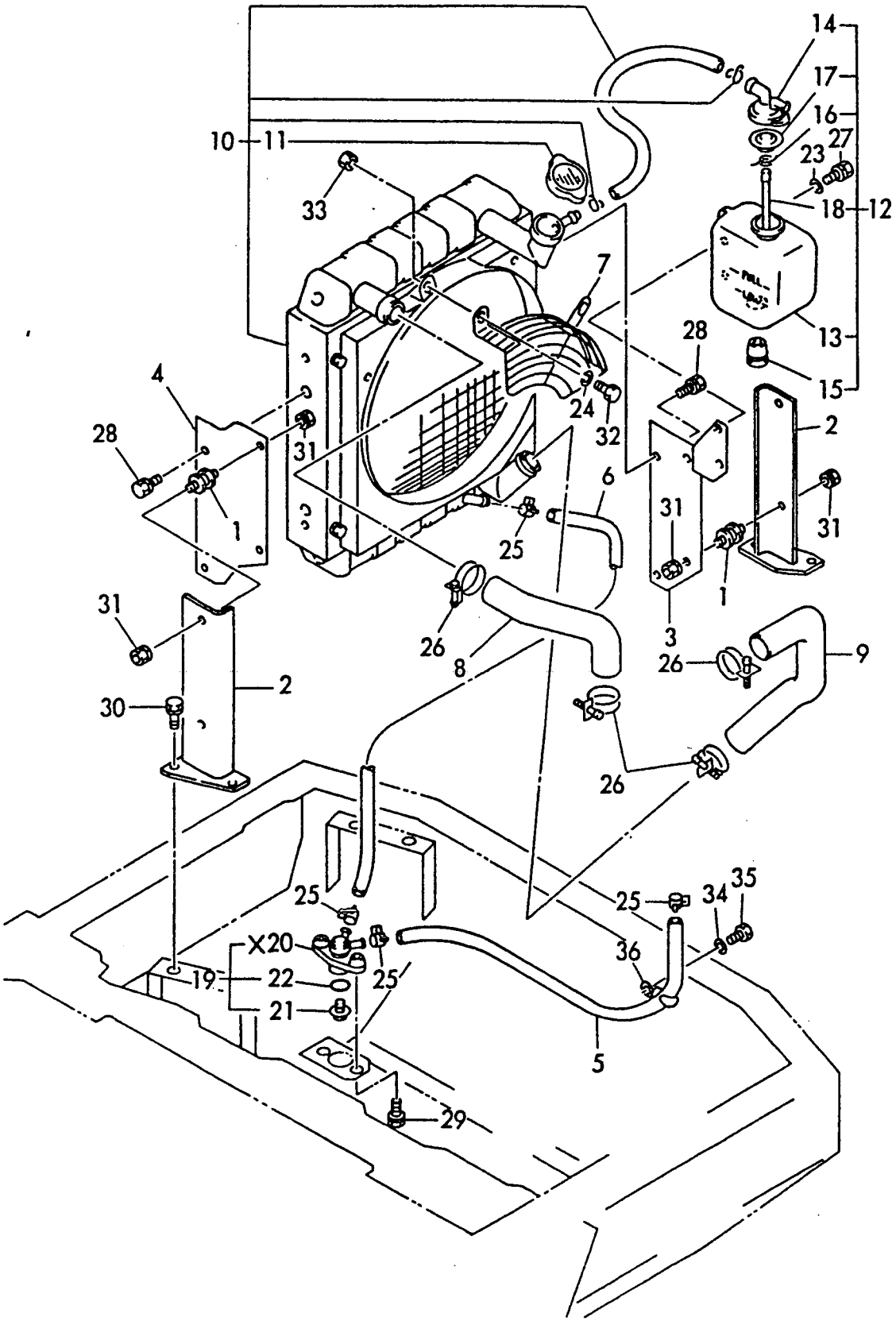

https://truckmanualshub.com/

```
1,1,,772179-14100,,"TANK ASSY",1,1,,,,,,,,,,,,,,,
2,2,,104200-11920,,COCK,1,1,,,,,,,,,,,,,,,
3,2,,172173-14300,,"GAUGE UNIT,FUEL",1,1,,,,,,,,,,,,,,,
4,2,,172162-14200,,GASKET,1,1,,,,,,,,,,,,,,,
6,3,,172179-14190,,"RUBBER,SEAL",1,1,,,,,,,,,,,,,,,
7,3,,172179-14200,,"SEAL A,CR SPONGE",1,1,,,,,,,,,,,,,,,
8,3,,172179-14210,,"SEAL B,CR SPONGE",2,2,,,,,,,,,,,,,,,
9,2,,172141-14260,,FLOAT,1,1,,,,,,,,,,,,,,,
10,2,,172122-14300,,"CAP, FUEL TANK",1,1,,,,,,,,,,,,,,,
11,3,,105430-55070,,GASKET,1,1,,,,,,,,,,,,,,,
12,2,,26557-050122,,"SCREW M 5X 12",5,5,,,,,,,,,,,,,,,
13,2,,172164-14170,,"GAUGE, FUEL",1,1,,,,,,,,,,,,,,,
14,2,,101504-55101,,"STRAINER,FUEL INLET",1,1,,,,,,,,,,,,,,,
15,2,,22217-050000,,"SPRING WASHER  5",5,5,,,,,,,,,,,,,,,
16,2,,23010-014000,,"CLAMP 14",2,2,,,,,,,,,,,,,,,
17,1,,172142-14320,,"GAUGE, FUEL",1,1,,,,,,,,,,,,,,,
18,1,,172159-65930,,"WASHER 10",5,5,,,,,,,,,,,,,,,
19,1,,22217-100000,,"SPRING WASHER 10",5,5,,,,,,,,,,,,,,,
20,1,,23080-013000,,"CLAMP 13,HOSE",1,1,,,,,,,,,,,,,,,
21,1,,26116-100252,,"BOLT M10X 25 PLATED",5,5,,,,,,,,,,,,,,,
22,1,,172179-14600,,"HOSE 7X410",1,1,,,,,,,,,,,,,,,
23,1,,172179-14620,,"HOSE 7X570",1,1,,,,,,,,,,,,,,,
24,1,,22217-080000,,"SPRING WASHER  8",2,2,,,,,,,,,,,,,,,
25,1,,129335-55700,,"SEPARATOR, WATER",1,1,,,,,,,,,,,,,,,
26,2,,104200-55321,,"VALVE, TAPER",1,1,,,,,,,,,,,,,,,
27,2,,104200-55330,,"SPRING, TAPER VALVE",1,1,,,,,,,,,,,,,,,
28,2,,104200-55341,,"HANDLE, COCK",1,1,,,,,,,,,,,,,,,
29,2,,124064-55510,,"BOWL, FUEL STRAINER",1,1,,,,,,,,,,,,,,,
30,2,,102103-55520,,O-RING,1,1,,,,,,,,,,,,,,,
31,2,,110250-55610,,"RING, RETAINING",1,1,,,,,,,,,,,,,,,
32,2,,121257-55720,,"SPRING, SCREEN",1,1,,,,,,,,,,,,,,,
33,2,,121257-55731,,FLOAT,1,1,,,,,,,,,,,,,,,
35,2,,101720-55750,,"PLUG 6",2,2,,,,,,,,,,,,,,,
36,2,,104200-55750,,"SCREW M 4",1,1,,,,,,,,,,,,,,,
37,2,,171081-55910,,SCREEN,1,1,,,,,,,,,,,,,,,
38,2,,23418-060000,,"GASKET 6, NYLON",2,2,,,,,,,,,,,,,,,
39,2,,24311-240100,,"O-RING 1A P-10A",1,1,,,,,,,,,,,,,,,
40,1,,23010-016000,,"CLAMP 16",6,6,,,,,,,,,,,,,,,
41,1,,22217-080000,,"SPRING WASHER  8",1,1,,,,,,,,,,,,,,,
42,1,,26116-080652,,"BOLT M 8X 65 PLATED",1,1,,,,,,,,,,,,,,,
43,1,,26116-080162,,"BOLT M 8X 16 PLATED",2,2,,,,,,,,,,,,,,,
44,1,,172179-14610,,"HOSE 7X310",1,1,,,,,,,,,,,,,,,
45,1,,172179-14220,,"COVER ASSY",1,1,,,,,,,,,,,,,,,
```

Fig. 7 FOタンク＆FOパイプ FUEL TANK & FUEL LINE

https://truckmanualshub.com/

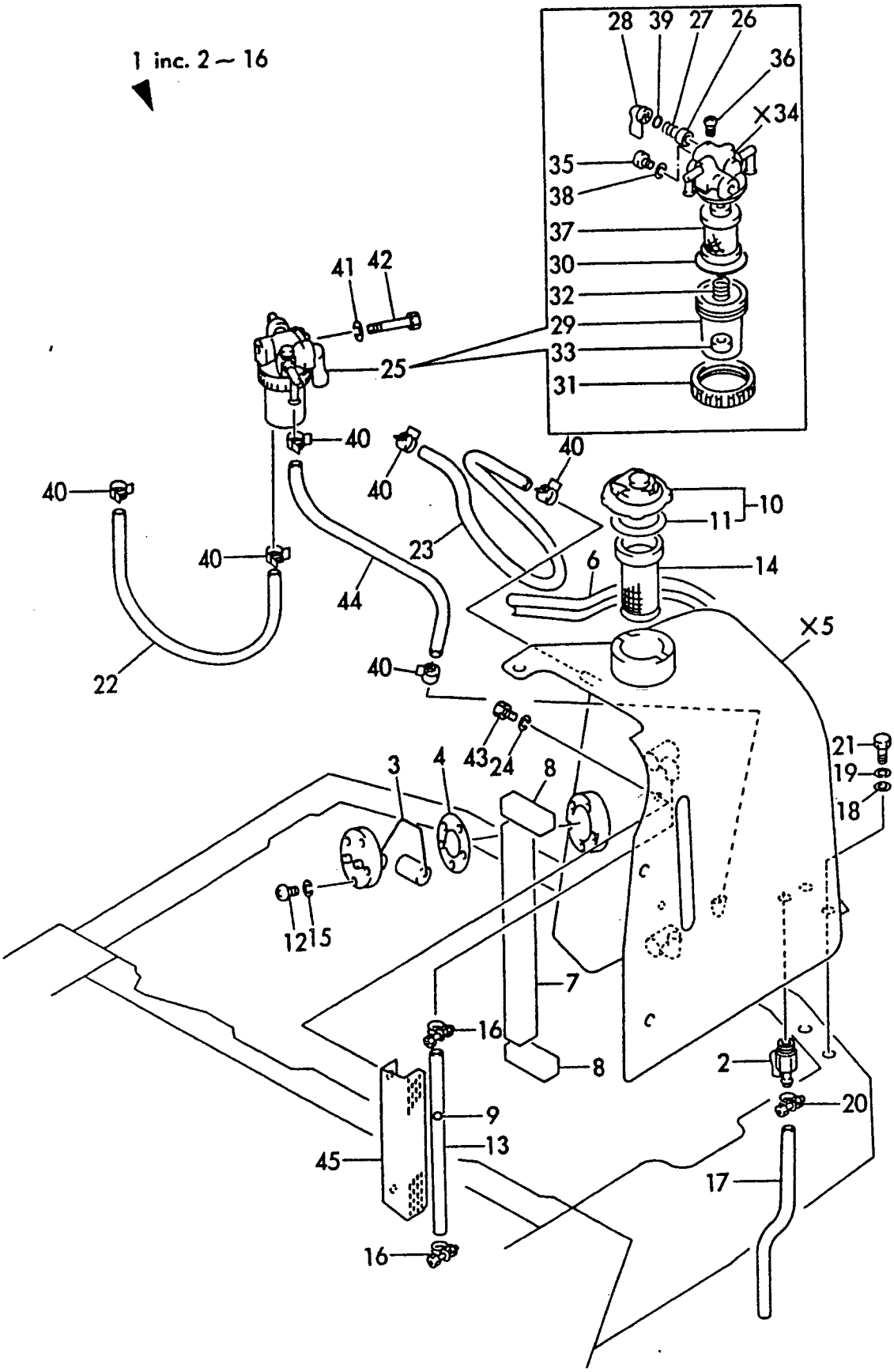

https://truckmanualshub.com/

```
1,1,,172159-16100,,"BATTERY NS60",1,1,,,,,,,,,,,,,,,,
2,1,,172179-16100,,"PLUS WIRE,BATTERY",1,1,,,,,,,,,,,,,,,,
3,1,,172179-16110,,"MINUS WIRE,BATTERY",1,1,,,,,,,,,,,,,,,,
4,1,,22137-100000,,"WASHER 10,POLISHED",1,1,,,,,,,,,,,,,,,,
5,1,,22217-080000,,"SPRING WASHER  8",1,1,,,,,,,,,,,,,,,,
6,1,,22217-100000,,"SPRING WASHER 10",1,1,,,,,,,,,,,,,,,,
7,1,,26716-080002,,"NUT M 8",1,1,,,,,,,,,,,,,,,,
8,1,,26716-100162,,"BOLT 10X 16",1,1,,,,,,,,,,,,,,,,
9,1,,172179-16300,,"CLAMP ASSY,BATTERY",1,1,,,,,,,,,,,,,,,,
10,1,,172179-16350,,"BOLT ASSY",2,2,,,,,,,,,,,,,,,,
11,1,,22217-080000,,"SPRING WASHER  8",2,2,,,,,,,,,,,,,,,,
```

Fig. 8 バッテリ BATTERY

https://truckmanualshub.com/

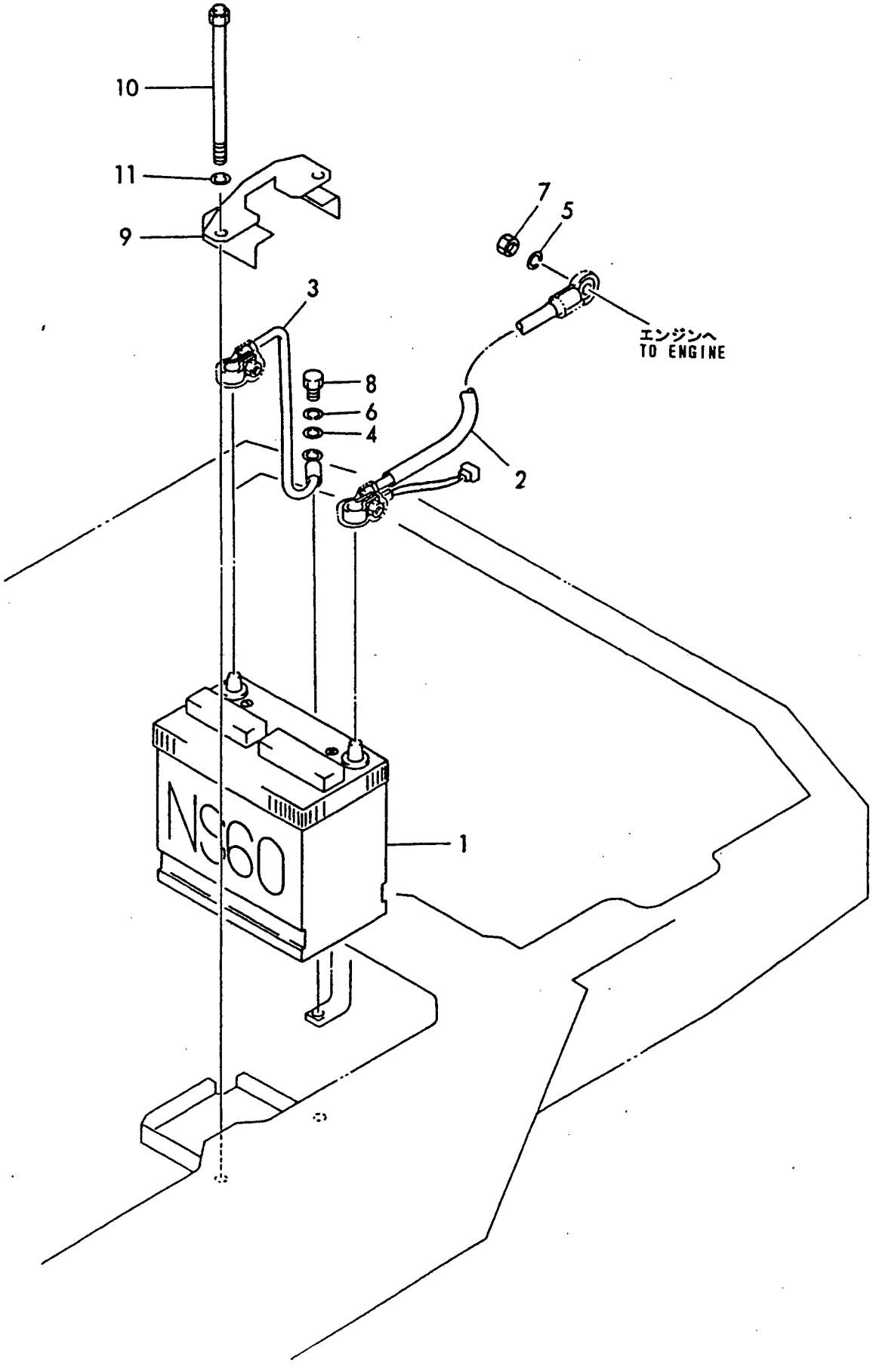

```
1,1,,172161-16150,,"CORD,EARTH",1,1,,,,,,,,,,,,,,,,
2,1,,172179-16500,,"HARNESS A",1,1,,,,,,,,,,,,,,,,
3,1,,172179-16510,,"HARNESS B",1,1,,,,,,,,,,,,,,,,
4,1,,172149-16520,,"HARNESS, STARTER",1,1,,,,,,,,,,,,,,,,
5,1,,172179-16520,,"HARNESS C",1,1,,,,,,,,,,,,,,,,
5-1,1,,172179-16521,,"HARNESS (C),
WIRE",1,1,,,,,S,,72174033,*1995.08,72174033,*1995.08,,,,,,
6,1,,172179-16530,,"FLW 0.85+0.5",1,1,,,,,,,,,,,,,,,,
7,1,,172174-16540,,"CLAMP 10X70",1,1,,,,,,,,,,,,,,,,
8,1,,172174-16550,,CLAMP,1,1,,,,,,,,,,,,,,,,
9,1,,172165-16560,,"HARNESS (G)",1,1,,,,,,,,,,,,,,,,
10,1,,172159-45160,,"CLAMP 350",5,5,,,,,,,,,,,,,,,,
11,1,,1A1380-58050,,"GROMMET 16X20X4.5",1,1,,,,,,,,,,,,,,,,
12,1,,172159-78080,,CLAMP,5,5,,,,,,,,,,,,,,,,
13,1,,22137-100000,,"WASHER 10,POLISHED",1,1,,,,,,,,,,,,,,,,
14,1,,22137-100000,,"WASHER 10,POLISHED",2,2,,,,,,,,,,,,,,,,
15,1,,22217-060000,,"SPRING WASHER  6",1,1,,,,,,,,,,,,,,,,
16,1,,22217-100000,,"SPRING WASHER 10",1,1,,,,,,,,,,,,,,,,
17,1,,22217-100000,,"SPRING WASHER 10",2,2,,,,,,,,,,,,,,,,
18,1,,22217-100000,,"SPRING WASHER 10",1,1,,,,,,,,,,,,,,,,
19,1,,26116-060122,,"BOLT M 6X 12",1,1,,,,,,,,,,,,,,,,
20,1,,26116-100162,,"BOLT M10X 16 PLATED",1,1,,,,,,,,,,,,,,,,
21,1,,26116-100162,,"BOLT M10X 16 PLATED",2,2,,,,,,,,,,,,,,,,
22,1,,26116-100162,,"BOLT M10X 16 PLATED",1,1,,,,,,,,,,,,,,,,
23,1,,172179-54870,,GROMET,1,1,,,,,,,,,,,,,,,,
24,1,,172162-17100,,"BOX ASSY, INDICATOR",1,1,,,,,,,,,,,,,,,,
24-1,1,,172162-17101,,"BOX ASSY,
INDICATOR",1,1,,,,,N,,72162464,*1994.05,72162464,*1994.05,,,,,,
24A,2,,172162-17270,,"COVER,
FRONT",1,1,,,,,W,,72176188,*1996.02,72176188,*1996.02,,,,,,,,I
24B,2,,172162-17240,,"METER ASSY,
FUEL",1,1,,,,,W,,72162475,*1996.02,72162475,*1996.02,,,,,,,,I
24C,2,,172162-
17250,,HARNESS,1,1,,,,,W,,72162475,*1996.02,72162475,*1996.02,,,,,,,,I
25,2,,172162-17120,,VALVE,4,4,,,,,,,,,,,,,,,,
25A,2,,172162-
17130,,HOURMETER,1,1,,,,,W,,72162464,*1994.05,72162464,*1994.05,,,,,,
26,1,,172174-17100,,"BRACKET (E) ASSY",1,1,,,,,,,,,,,,,,,,
27,1,,172179-17100,,"BRACKET (T) ASSY",1,1,,,,,,,,,,,,,,,,
28,1,,172141-17141,,"UNIT, CHECKER",1,1,,,,,,,,,,,,,,,,
29,1,,172141-17150,,BUZZER,1,1,,,,,,,,,,,,,,,,
30,1,,172141-17161,,"BOX, FUSE",1,1,,,,,,,,,,,,,,,,
31,2,,29411-150000,,"FUSE (15A),CARTRIDGE",5,5,,,,,,,,,,,,,,,,
32,1,,172141-17190,,"SWITCH, WORK LAMP",1,1,,,,,,,,,,,,,,,,
33,2,,172141-17230,,"BULB 24V- 6W",1,1,,,,,,,,,,,,,,,,
34,1,,172162-17410,,"LAMP ASSY, HEADLIGHT",1,1,,,,,,,,,,,,,,,,
35,2,,29220-788200,,BULB,1,1,,,,,,,,,,,,,,,,
36,1,,194464-52190,,"SWITCH, SAFETY START",2,2,,,,,,,,,,,,,,,,
36-1,1,,172164-
17140,,SWITCH,1,2,,,,,S,,72174033,*1995.08,72174033,*1995.08,,,,,,
37,1,,119247-77100,,"RELAY, SAFETY",1,1,,,,,,,,,,,,,,,,
38,1,,119640-77711,,"LIMITER,CURRENT",1,1,,,,,,,,,,,,,,,,
39,1,,121522-77721,,"INDICATOR, CHARGING",1,1,,,,,,,,,,,,,,,,
40,1,,129155-77810,,RESISTOR,1,1,,,,,,,,,,,,,,,,
41,1,,119650-77910,,"RELAY, GROW",1,1,,,,,,,,,,,,,,,,
44,1,,119632-77920,,TIMER,1,1,,,,,,,,,,,,,,,,
44-1,1,,119632-77921,,"TIMER(1
SEC.",1,1,,,,,N,,72175176,*1994.12,72175176,*1994.12,,,,,,
44-2,1,,119632-
77922,,TIMER,1,1,,,,,N,,72175204,*1995.10,72175204,*1995.10,,,,,,
45,1,,22137-060000,,"WASHER 6, POLISHED",2,2,,,,,,,,,,,,,,,,
46,1,,22137-060000,,"WASHER 6, POLISHED",1,1,,,,,,,,,,,,,,,,
47,1,,22137-060000,,"WASHER 6, POLISHED",2,2,,,,,,,,,,,,,,,,
```

https://truckmanualshub.com/

```
48,1,,22137-060000,,"WASHER 6, POLISHED",1,1,,,,,,,,,,,,,,,,
49,1,,22137-180000,,"WASHER
18",2,2,,,,,Z,,72174033,*1995.08,72174033,*1995.08,,,,,,
50,1,,22217-060000,,"SPRING WASHER  6",2,2,,,,,,,,,,,,,,,,
51,1,,22217-080000,,"SPRING WASHER  8",2,2,,,,,,,,,,,,,,,,
52,1,,22217-080000,,"SPRING WASHER  8",2,2,,,,,,,,,,,,,,,,
53,1,,22217-100000,,"SPRING WASHER 10",3,3,,,,,,,,,,,,,,,,
54,1,,26013-060122,,"BOLT M 6X 12",2,2,,,,,,,,,,,,,,,,
55,1,,26022-050162,,"SCREW M 5X 16",2,2,,,,,,,,,,,,,,,,
56,1,,26022-060122,,"SCREW M 6X 12",1,1,,,,,,,,,,,,,,,,
57,1,,26022-060122,,"SCREW M 6X 12",1,1,,,,,,,,,,,,,,,,
58,1,,26022-060122,,"SCREW M 6X 12",2,2,,,,,,,,,,,,,,,,
59,1,,26022-060162,,"SCREW M 6X 16",1,1,,,,,,,,,,,,,,,,
60,1,,26022-060162,,"SCREW M 6X 16",1,1,,,,,,,,,,,,,,,,
61,1,,26022-060162,,"SCREW M 6X 16",1,1,,,,,,,,,,,,,,,,
62,1,,26022-060252,,"SCREW M 6X 25",2,2,,,,,,,,,,,,,,,,
63,1,,26116-060122,,"BOLT M 6X 12",2,2,,,,,,,,,,,,,,,,
64,1,,26116-080162,,"BOLT M 8X 16 PLATED",2,2,,,,,,,,,,,,,,,,
65,1,,26116-080162,,"BOLT M 8X 16 PLATED",2,2,,,,,,,,,,,,,,,,
66,1,,26589-040202,,"SCREW M4,BINDING",4,4,,,,,,,,,,,,,,,,
67,1,,26716-100002,,"NUT M10",3,3,,,,,,,,,,,,,,,,
68,1,,26776-180002,,"NUT M18,LOCK",2,2,,,,,,,,,,,,,,,,
68-1,1,,26776-160002,,"LOCK NUT M16
PLATED",1,2,,,,,S,,72174033,*1995.08,72174033,*1995.08,,,,,,
69,1,,933110-00100,,"SWITCH ASSY, STARTER",1,1,,,,,,,,,,,,,,,,
70,2,,933110-00200,,"SWITCH ASSY,STARTER",1,1,,,,,,,,,,,,,,,,
71,2,,933110-00301,,"KEY ASSY",1,1,,,,,,,,,,,,,,,,
72,1,,933110-05300,,HORN,1,1,,,,,,,,,,,,,,,,
73,1,,933113-15900,,"COVER, SWITCH TERMI.",1,1,,,,,,,,,,,,,,,,
74,1,,172165-16600,,"HARNESS E",1,,,,,,,,,,,,,,,,
75,1,,172162-17330,,"SWITCH,WIPER",1,,,,,,,,,,,,,,,,
76,1,,172162-17610,,"SWITCH,HEATER",1,,,,,,,,,,,,,,,,
77,1,,933113-15000,,"CIGAR LIGHTER ASSY",1,,,,,,,,,,,,,,,,
78,1,,22137-040000,,"WASHER 4, POLISHED",4,4,,,,,,,,,,,,,,,,
79,1,,26716-040002,,"NUT M 4",4,4,,,,,,,,,,,,,,,,
```

Fig. 9 電装品 ELECTRIC PART

https://truckmanualshub.com/

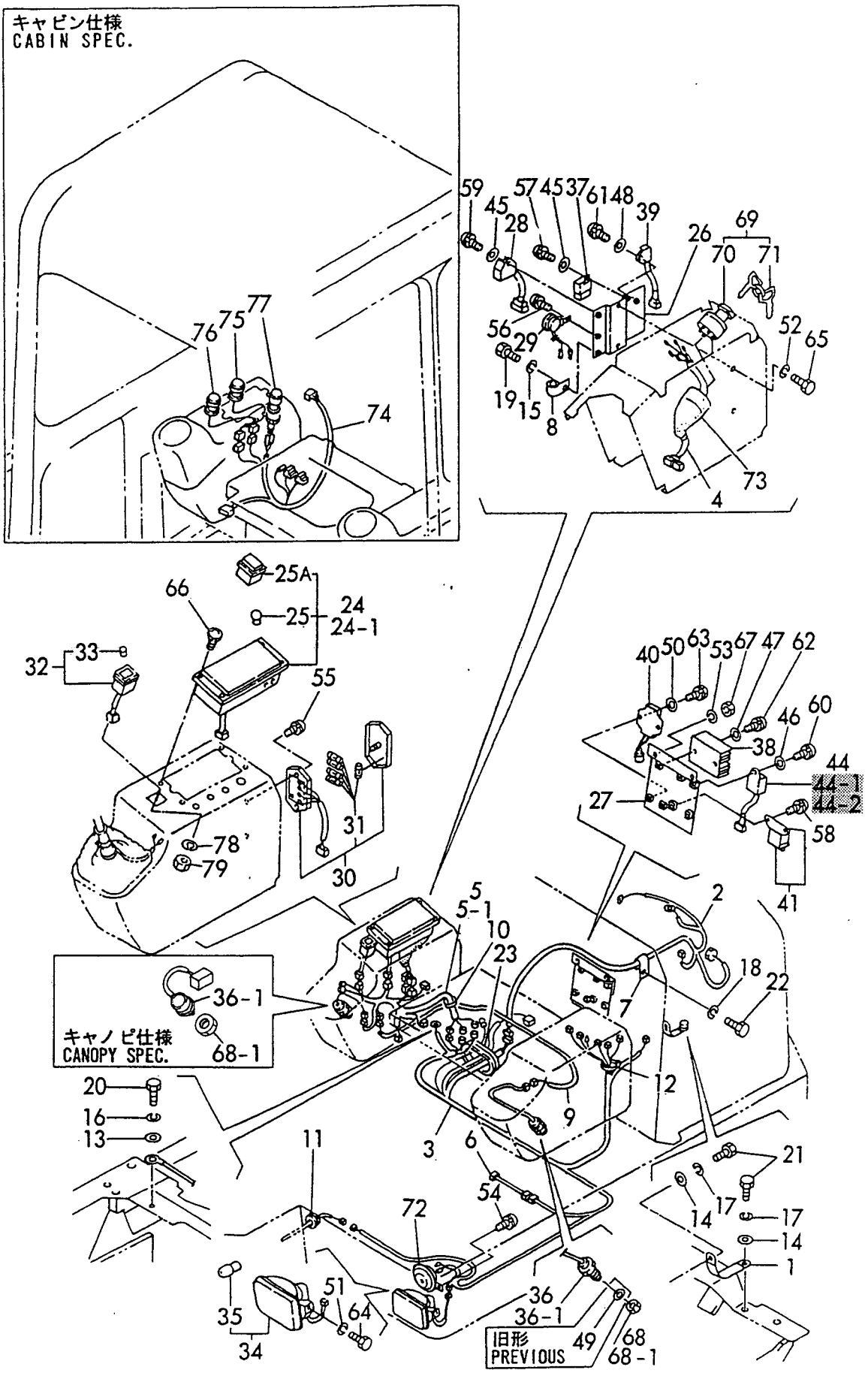

https://truckmanualshub.com/

```
1,1,,172159-17430,,BAND,5,5,,,,,,,,,,,,,,,,
2,1,,172180-17400,,"WIRE, LAMP",1,1,,,,,,,,,,,,,,,,
3,1,,172161-17200,,"LAMP,WORK",1,1,,,,,,,,,,,,,,,,
4,2,,172161-17210,,"BULB 15V-60W",1,1,,,,,,,,,,,,,,,,
5,1,,172159-17451,,"COVER, LAMP",1,1,,,,,,,,,,,,,,,,
6,1,,26013-120302,,"BOLT W/WASHER M12X30",1,1,,,,,,,,,,,,,,,,
7,1,,172159-75500,,"WASHER, SIDE CLUTCH",1,1,,,,,,,,,,,,,,,,
```

Fig. 10 ワークランプ WORK LAMP

https://truckmanualshub.com/

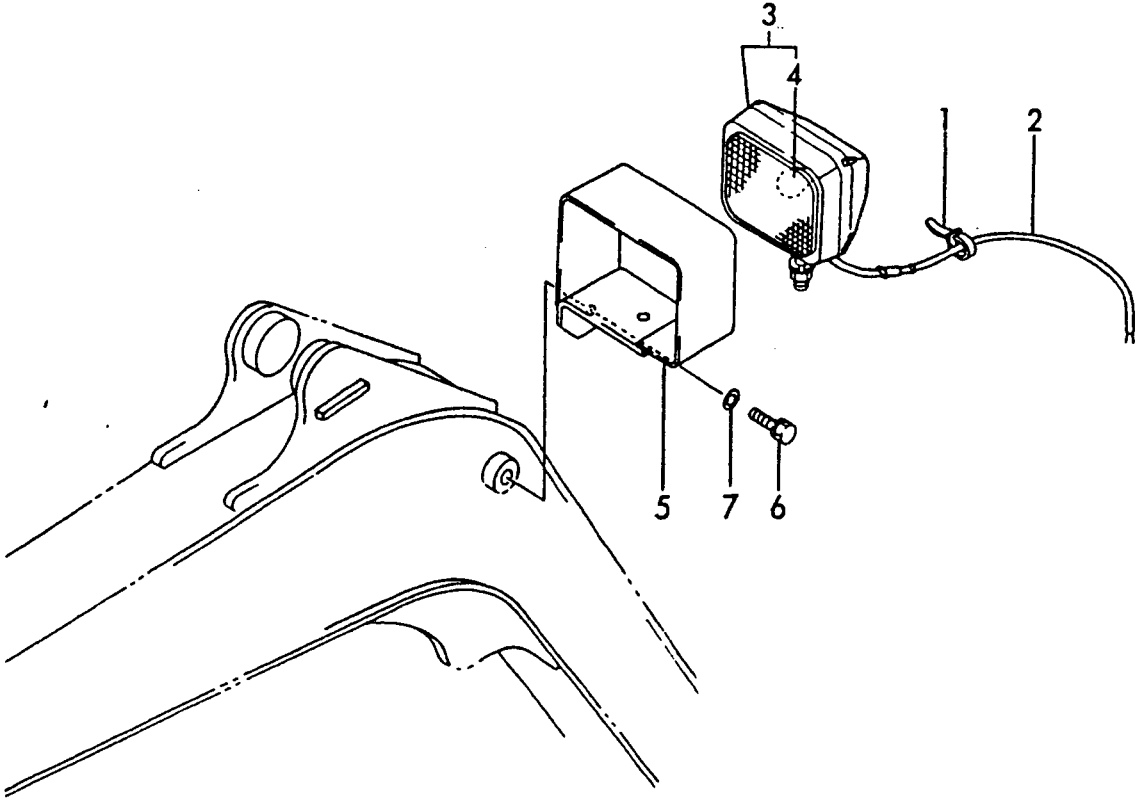

https://truckmanualshub.com/

```
1,1,,172174-17620,,"CONNECTOR PT3/8-M16",1,,,,,,,,,,,,,,,,,,
2,1,,172124-17630,,"VALVE, MINIATURE",1,,,,,,,,,,,,,,,,,,
3,1,,172161-13510,,"JOINT,HEATER",1,,,,,,,,,,,,,,,,,,
4,1,,172179-17600,,"JOINT 3/8",2,,,,,,,,,,,,,,,,,,
5,1,,124465-44950,,"GASKET 16",1,,,,,,,,,,,,,,,,,,
```

Fig. 11 ヒータ HEATER

https://truckmanualshub.com/

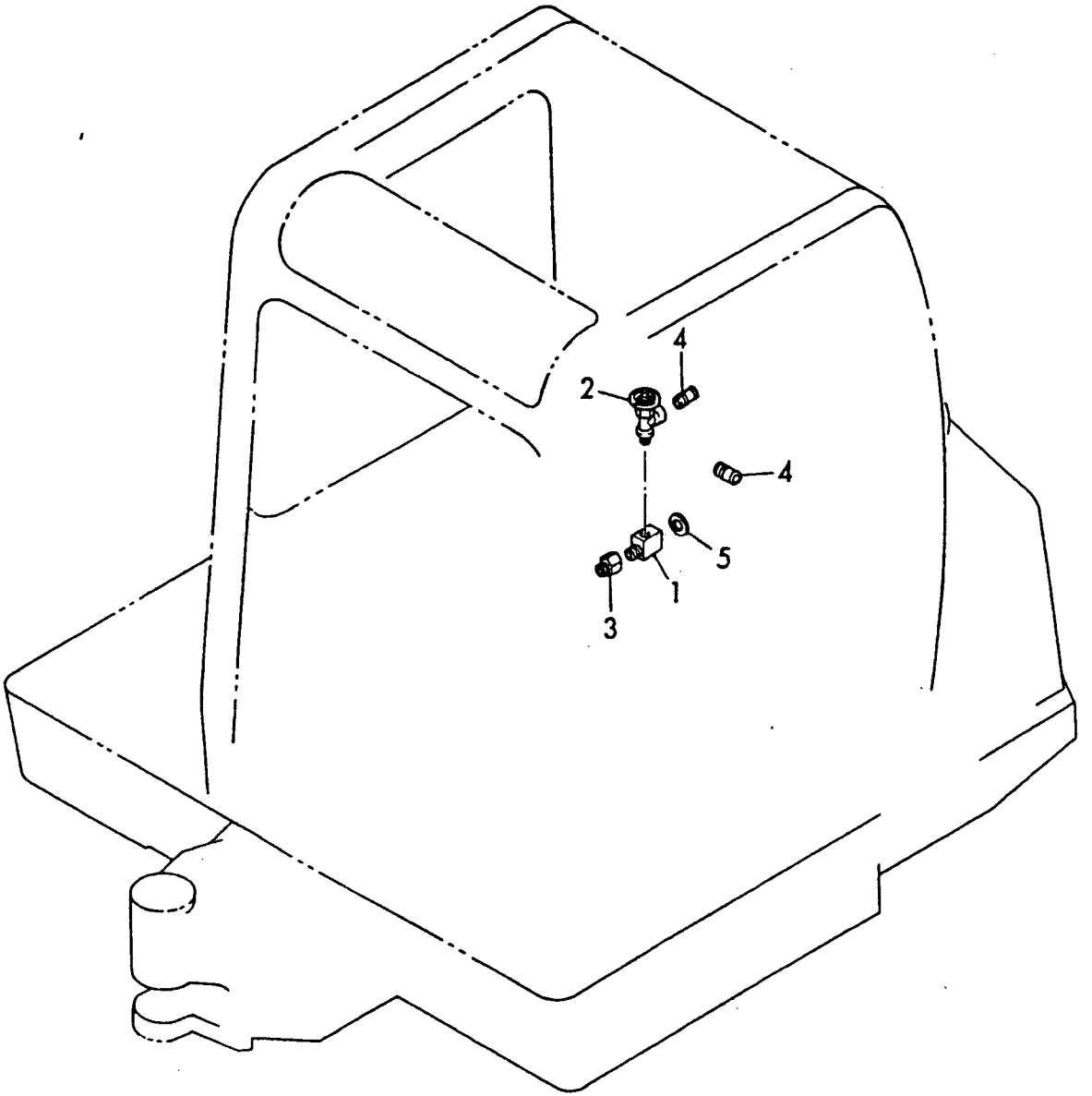

https://truckmanualshub.com/

```
1,1,,172137-29110,,"SPROCKET,RUBBER CRAW",2,2,,,,,,,,,,,,,,,,
2,1,,172137-29120,,SPROCKET,2,2,,,,,,,,,,,,,,,,
3,1,,26013-100252,,"BOLT W/WASHER M10X25",18,18,,,,,,,,,,,,,,,,,,
4,1,,772137-37300,,"ROLLER ASSY, TRUCK",6,6,,,,,,,,,,,,,,,,
6,2,,172137-37330,,"SHAFT, TRACK ROLLER",6,6,,,,,,,,,,,,,,,,
7,2,,172137-37360,,SEAL,12,12,,,,,,,,,,,,,,,,
8,2,,22242-000250,,"CIRCLIP 25S",12,12,,,,,,,,,,,,,,,,
9,2,,22252-000470,,"CIRCLIP   47",12,12,,,,,,,,,,,,,,,,
10,2,,24101-060054,,"BALL BEARING",12,12,,,,,,,,,,,,,,,,
11,1,,172137-99490,,"IDLER KIT, FRONT",2,2,,,,,,,,,,,,,,,,
12,2,,172137-37110,,"SHAFT, IDLER",2,2,,,,,,,,,,,,,,,,
13,2,,1A1030-48250,,"SEAL QLF30621218,OIL",4,4,,,,,,,,,,,,,,,,
14,2,,22242-000300,,"CIRCLIP   30",2,2,,,,,,,,,,,,,,,,
15,2,,22252-000620,,"CIRCLIP 62(H)",4,4,,,,,,,,,,,,,,,,
16,2,,24101-062064,,"BALL BEARING",4,4,,,,,,,,,,,,,,,,
17,2,,933168-13990,,"COLLAR(B),IDLE.SHAFT",2,2,,,,,,,,,,,,,,,,
18,1,,172137-37100,,"IDLER ASSY",2,2,,,,,,,,,,,,,,,,
19,1,,172137-37130,,"COVER (L), SEAL",2,2,,,,,,,,,,,,,,,,
20,1,,172137-37140,,"COVER (R), SEAL",2,2,,,,,,,,,,,,,,,,
21,1,,172137-37710,,"SPRING, ADJUSTING",2,2,,,,,,,,,,,,,,,,
22,1,,172137-37801,,"TUBE, ADJUSTER",2,2,,,,,,,,,,,,,,,,
23,1,,172122-37843,,"VALVE ASSY, NIPPLE",2,2,,,,,,,,,,,,,,,,
24,2,,24315-000140,,"O-RING 1B P-14.0",2,2,,,,,,,,,,,,,,,,
25,2,,24761-020000,,"NIPPLE PT1/8,GREASE",2,2,,,,,,,,,,,,,,,,
26,1,,172137-37850,,"RING, BACK UP",2,2,,,,,,,,,,,,,,,,
27,1,,24315-000300,,"O-RING 1B P-30.0",2,2,,,,,,,,,,,,,,,,
28,1,,26013-100302,,"BOLT M10X 30",8,8,,,,,,,,,,,,,,,,
29,1,,933126-38600,,"SEAL, DUST",2,2,,,,,,,,,,,,,,,,
30,1,,933171-13691,,"PLUG PT1/8",2,2,,,,,,,,,,,,,,,,
31,1,,22217-120000,,"WASHER 12,SPRING",12,12,,,,,,,,,,,,,,,,
32,1,,26116-120252,,"BOLT M12X 25 PLATED",12,12,,,,,,,,,,,,,,,,
```

Fig. 12 ローラ&アジャスト ROLLER & ADJUST

https://truckmanualshub.com/

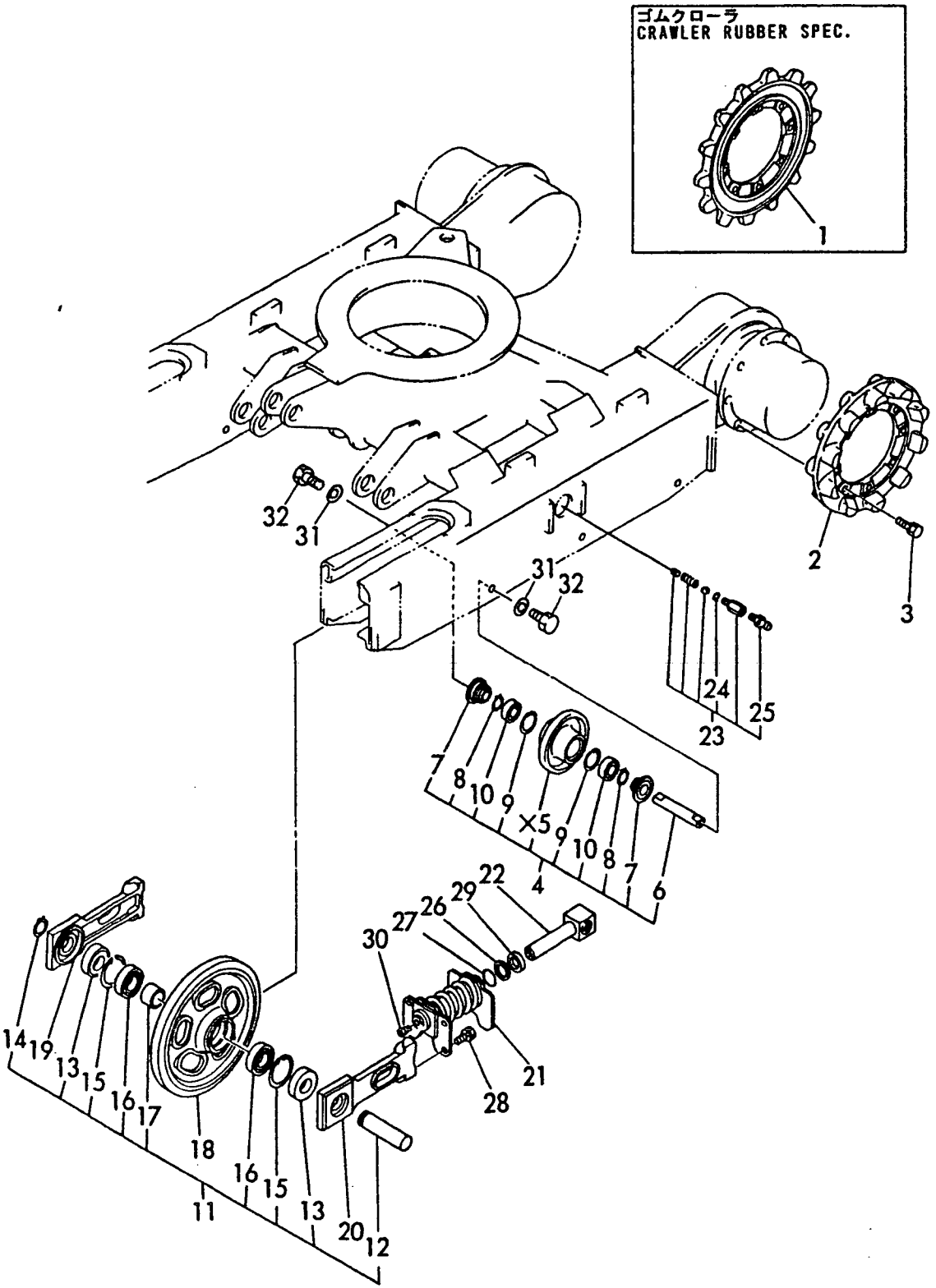

https://truckmanualshub.com/

```
1,1,,772137-38101,,"CRAWLER ASSY",2,2,,,,,,,,,,,,,,,,
2,2,,172137-38101,,"LINK ASSY, TRACK",2,2,,,,,,,,,,,,,,,,
3,3,,172137-38131,,"COLLAR, LINK",58,58,,,,,,,,,,,,,,,,
4,3,,172137-38161,,"PIN, TRACK",58,58,,,,,,,,,,,,,,,,
5,3,,22351-060020,,"SPRING PIN 6X20",58,58,,,,,,,,,,,,,,,,
6,3,,172137-38111,,"SHOW PLATE",60,60,,,,,,,,,,,,,,,,
7,2,,172137-38131,,"COLLAR, LINK",2,2,,,,,,,,,,,,,,,,
8,2,,172137-38161,,"PIN, TRACK",2,2,,,,,,,,,,,,,,,,
9,2,,22351-060020,,"SPRING PIN 6X20",2,2,,,,,,,,,,,,,,,,
10,1,,172180-38600,,"CRAWLER ASSY, RUBBER",2,2,,,,,,,,,,,,,,,,
```

Fig. 13 クローラ CRAWLER

https://truckmanualshub.com/

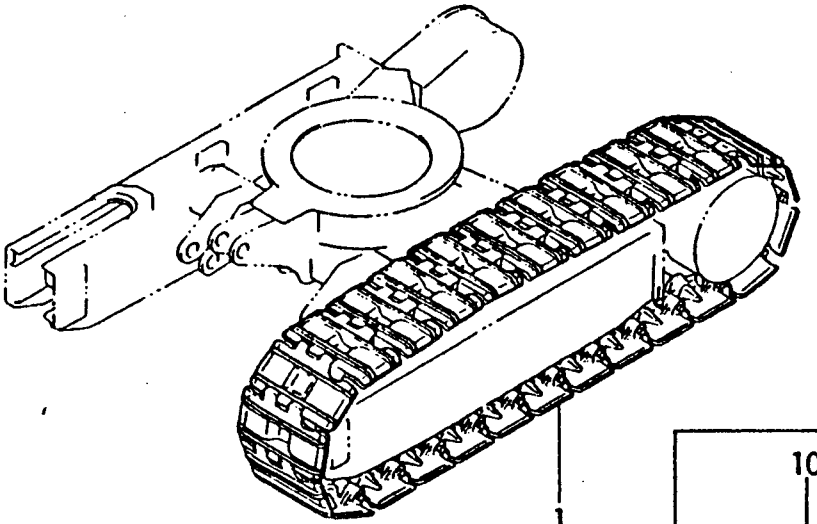

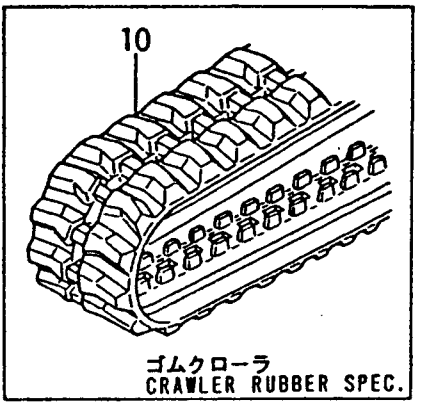

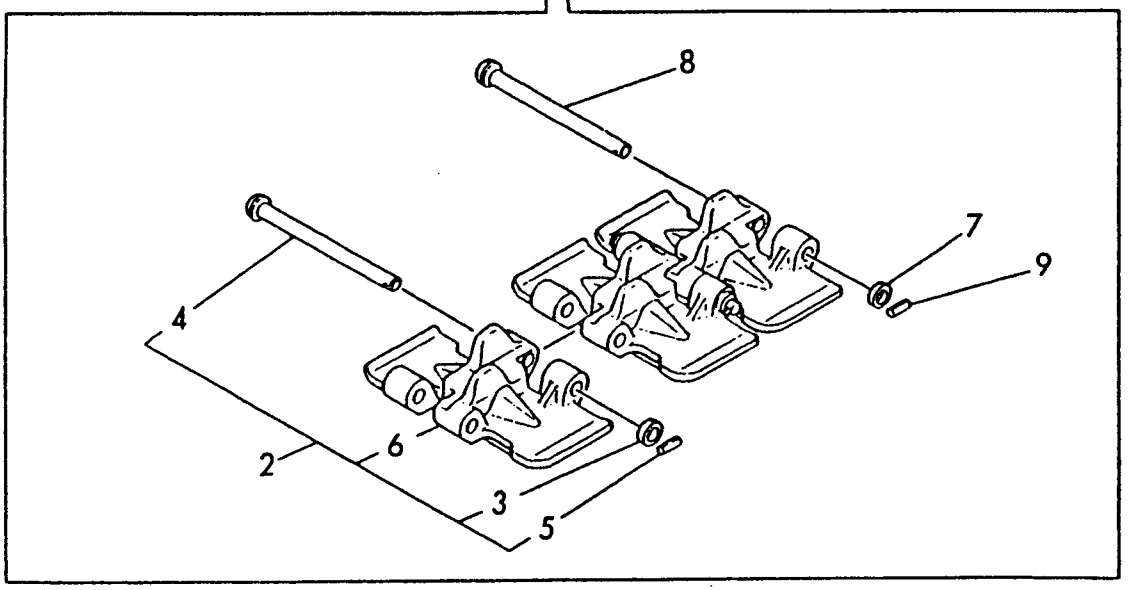

https://truckmanualshub.com/

```
1,1,,172146-41320,,GROMMET,1,1,,,,,,,,,,,,,,,,
2,1,,172159-65930,,"WASHER 10",2,2,,,,,,,,,,,,,,,,
3,1,,172174-44110,,SUPPORT,1,1,,,,,,,,,,,,,,,,
4,1,,172174-44210,,COVER,1,1,,,,,,,,,,,,,,,,
5,1,,172179-44100,,"STAND R, LEVER",1,1,,,,,,,,,,,,,,,,
6,2,,172161-41370,,"BUSH 2015",2,2,,,,,,,,,,,,,,,,
8,2,,24550-025150,,"BUSH 25X15",2,2,,,,,,,,,,,,,,,,
9,1,,172179-44170,,"STAND L, LEVER",1,1,,,,,,,,,,,,,,,,
10,2,,172161-41370,,"BUSH 2015",2,2,,,,,,,,,,,,,,,,
12,2,,24550-025150,,"BUSH 25X15",2,2,,,,,,,,,,,,,,,,
13,1,,172174-44710,,"GUIDE L, HOSE",1,1,,,,,,,,,,,,,,,,
14,1,,172174-44740,,"BRACKET, ACCEL",1,1,,,,,,,,,,,,,,,,
15,1,,172174-44770,,"BRACKET R",1,1,,,,,,,,,,,,,,,,
16,1,,172174-44790,,"BRACKET L COMP.,EP",1,1,,,,,,,,,,,,,,,,
17,1,,172174-44810,,"BOLT M 8",4,4,,,,,,,,,,,,,,,,
18,1,,172174-44820,,"SHIM 42X25.5X0.5",4,4,,,,,,,,,,,,,,,,
19,1,,172151-53430,,GROMMET,2,2,,,,,,,,,,,,,,,,
20,1,,172174-44860,,WASHER,2,2,,,,,,,,,,,,,,,,
21,1,,172174-44850,,"BOLT  8X 16",8,8,,,,,,,,,,,,,,,,
22,1,,22137-100000,,"WASHER 10,POLISHED",7,7,,,,,,,,,,,,,,,,
23,1,,22242-000250,,"CIRCLIP 25S",2,2,,,,,,,,,,,,,,,,
24,1,,24761-020000,,"NIPPLE PT1/8,GREASE",4,4,,,,,,,,,,,,,,,,
25,1,,26013-080202,,"BOLT W/WASHER M8X20",4,4,,,,,,,,,,,,,,,,
26,1,,26013-080202,,"BOLT W/WASHER M8X20",4,4,,,,,,,,,,,,,,,,
27,1,,26013-100202,,"BOLT W/WASHER M10X20",2,2,,,,,,,,,,,,,,,,
28,1,,26116-100202,,"BOLT M10X 20 PLATED",5,5,,,,,,,,,,,,,,,,
29,1,,26116-100902,,"BOLT M10X 90 PLATED",2,2,,,,,,,,,,,,,,,,
30,1,,194630-62360,,GROMMET,4,4,,,,,,,,,,,,,,,,
31,1,,26116-100504,,"BOLT M10X 50 PLATED",1,1,,,,,,,,,,,,,,,,
32,1,,26716-100002,,"NUT M10",1,1,,,,,,,,,,,,,,,,
33,1,,22217-080000,,"SPRING WASHER  8",4,4,,,,,,,,,,,,,,,,
34,1,,24311-000340,,"O-RING 1A P-34.0",4,4,,,,,,,,,,,,,,,,
35,1,,172174-44870,,"GUIDE COMP.,HOSE",1,1,,,,,,,,,,,,,,,,
```

Fig. 14 ソウジュウソウチ(レバー&スタンド) CONTROL EQUIPMENT(LEVER & STAND)

https://tractormanualshop.com/

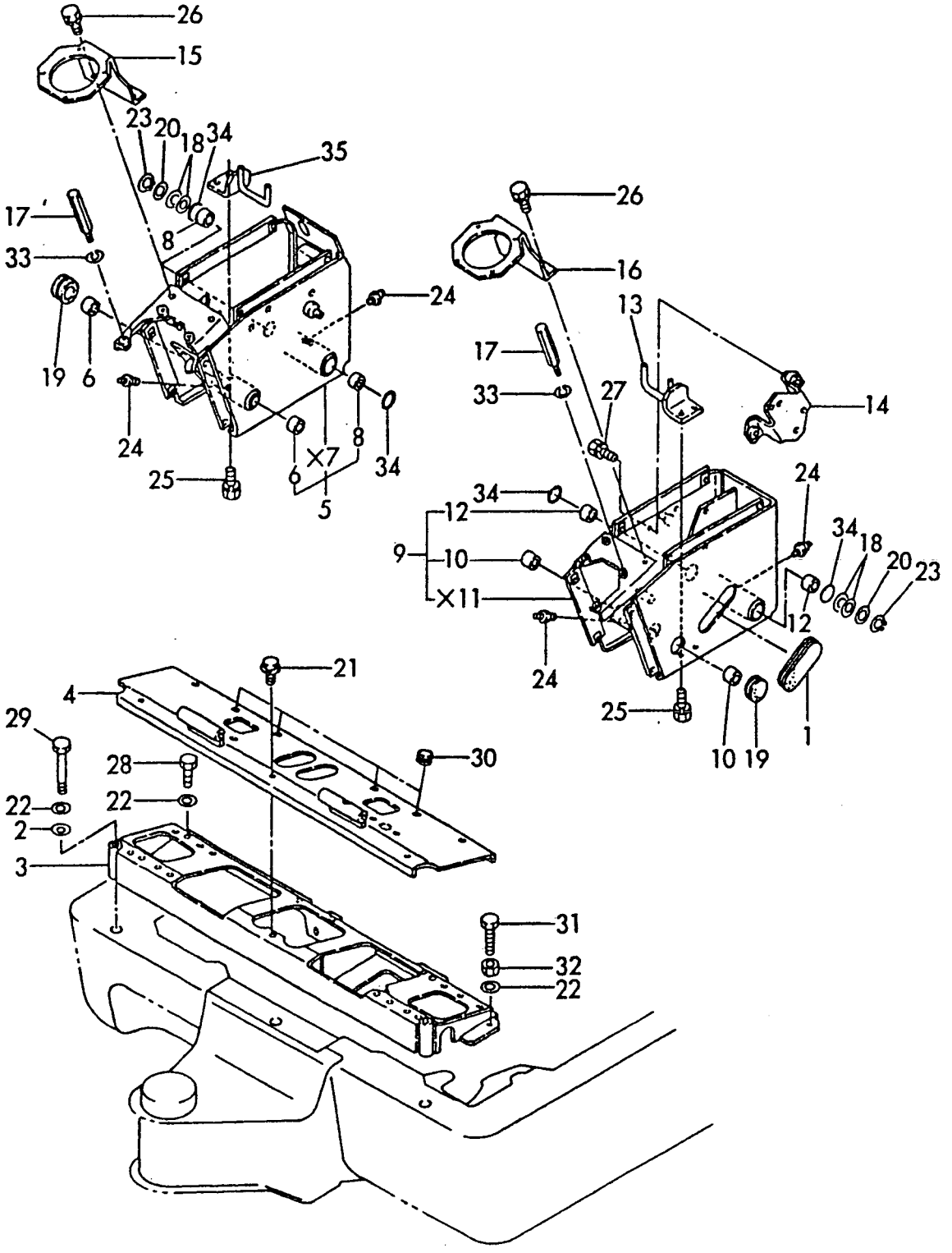

https://truckmanualshub.com/

```
1,1,,172141-41340,,BOOTS,2,2,,,,,,,,,,,,,,,,
2,1,,172122-45050,,"KNOB (L)",1,1,,,,,,,,,,,,,,,,
2-1,1,,172164-45950,,"GRIP L,
DRIV.",1,1,,,,,S,,72184009,M50691,72184009,M50691,,,,,,,,,I
3,1,,172122-45060,,"KNOB (R)",1,1,,,,,,,,,,,,,,,,
3-1,1,,172164-45960,,"GRIP R,
DRIV.",1,1,,,,,S,,72184009,M50691,72184009,M50691,,,,,,,,,I
4,1,,172179-45100,,"LEVER L COMP.,TRACK",1,1,,,,,,,,,,,,,,,,
4-1,1,,172179-
45101,,LEVER(L),1,1,,,,,S,,72184009,M50691,72184009,M50691,,,,,,,,,I
5,2,,172161-41370,,"BUSH 2015",2,2,,,,,,,,,,,,,,,,
6,1,,172179-45130,,"LEVER R COMP.,TRACK",1,1,,,,,,,,,,,,,,,,
6-1,1,,172179-45131,,"LEVER(R),
TRACK",1,1,,,,,S,,72184009,M50691,72184009,M50691,,,,,,,,,I
7,2,,172161-41370,,"BUSH 2015",2,2,,,,,,,,,,,,,,,,
8,1,,172161-46200,,"O-RING 27X5.7",3,3,,,,,,,,,,,,,,,,
9,1,,24761-020000,,"NIPPLE PT1/8,GREASE",2,2,,,,,,,,,,,,,,,,
10,1,,26116-100504,,"BOLT M10X 50 PLATED",4,4,,,,,,,,,,,,,,,,
11,1,,26716-100002,,"NUT M10",4,4,,,,,,,,,,,,,,,,
12,1,,26756-100002,,"LOCK NUT M10 PLATED",2,2,,,,,,,,,,,,,,,,
13,1,,172179-45200,,"SHAFT, TRACK",1,1,,,,,,,,,,,,,,,,
14,1,,26013-100252,,"BOLT W/WASHER M10X25",2,2,,,,,,,,,,,,,,,,
15,1,,172174-46100,,"PEDAL L ASSY",1,1,,,,,,,,,,,,,,,,
16,1,,172174-46150,,"PEDAL R COMP",1,1,,,,,,,,,,,,,,,,
17,1,,26013-060302,,"BOLT M 6X 30",4,4,,,,,,,,,,,,,,,,
18,1,,172179-45660,,"ROD 190",2,2,,,,,,,,,,,,,,,,
19,1,,172122-46590,,"ELBALL 8",2,2,,,,,,,,,,,,,,,,
20,1,,22137-080000,,"WASHER 8, POLISHED",2,2,,,,,,,,,,,,,,,,
21,1,,22417-160160,,"COTTER PIN 1.6X16",2,2,,,,,,,,,,,,,,,,
22,1,,26051-080002,,"NUT M 8",4,4,,,,,,,,,,,,,,,,
23,1,,172159-42910,,"PIN 4.75X14",2,2,,,,,,,,,,,,,,,,
24,1,,172122-45720,,"ROD-END 14",2,2,,,,,,,,,,,,,,,,
25,1,,22137-140000,,"WASHER 14,POLISHED",2,2,,,,,,,,,,,,,,,,
26,1,,22157-140000,,"WASHER 14",2,2,,,,,,,,,,,,,,,,
27,1,,22217-140000,,"SPRING WASHER 14",2,2,,,,,,,,,,,,,,,,
28,1,,26716-140002,,"NUT M14",2,2,,,,,,,,,,,,,,,,
29,1,,26756-140002,,"LOCK NUT M14 PLATED",2,2,,,,,,,,,,,,,,,,
```

Fig. 15 操縦装置（走行） CONTROL EQUIPMENT (TRAVEL)

https://truckmanualshub.com/

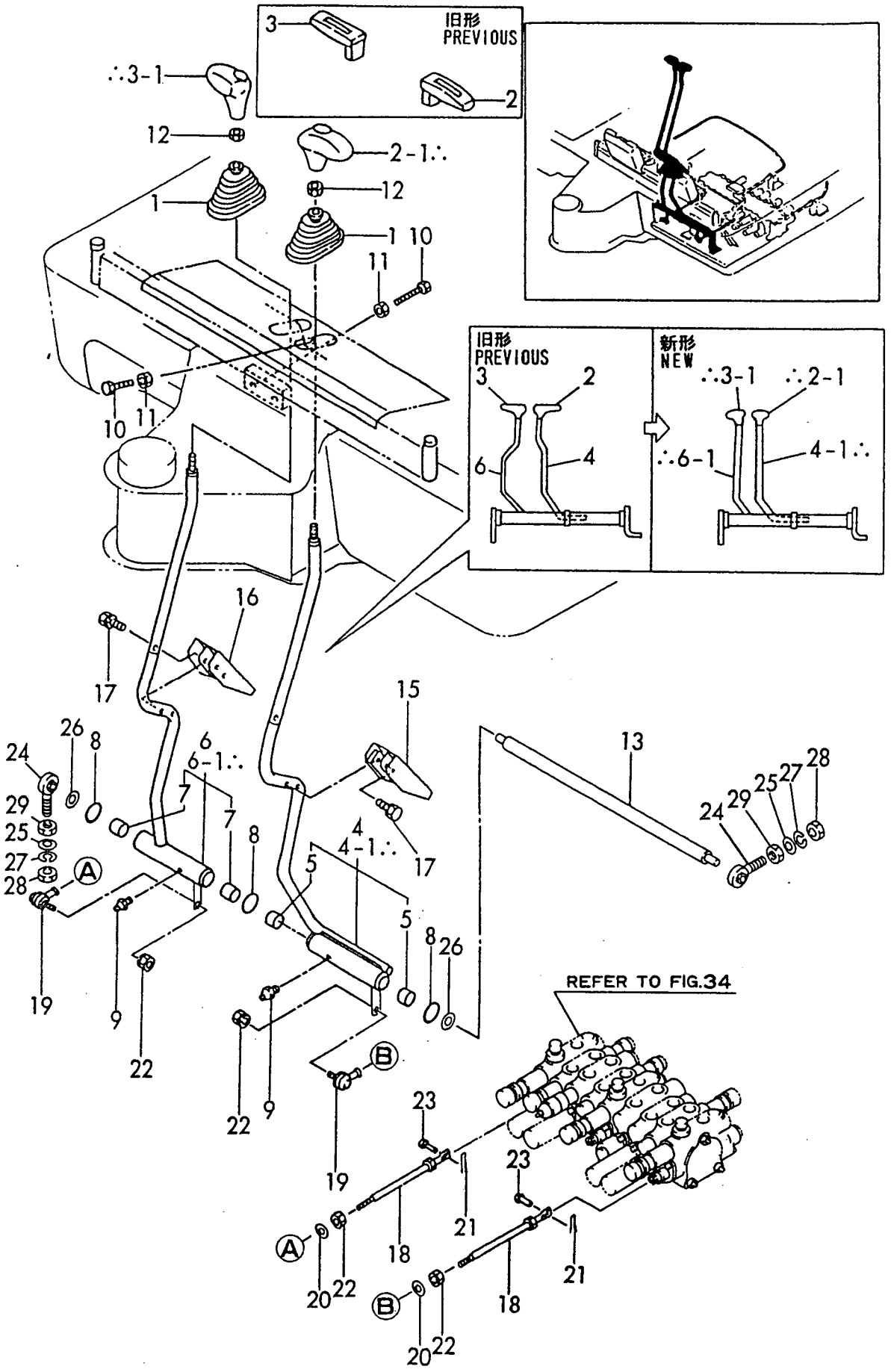

https://truckmanualshub.com/

```
1,1,,172159-41860,,"WASHER 10 36 4.5",1,1,,,,,,,,,,,,,,,,
2,1,,172161-46200,,"O-RING 27X5.7",2,2,,,,,,,,,,,,,,,,
3,1,,172174-45410,,"LINK, PEDAL",1,1,,,,,,,,,,,,,,,,
4,2,,172161-41360,,"BUSH 1415",2,2,,,,,,,,,,,,,,,,
5,1,,172174-45470,,"BRACKET, PEDAL",1,1,,,,,,,,,,,,,,,,
6,1,,172174-45510,,"PIN 14X105",1,1,,,,,,,,,,,,,,,,
7,1,,172179-45230,,"LINK W/BUSH, SWING",1,1,,,,,,,,,,,,,,,,
8,2,,172161-41370,,"BUSH 2015",2,2,,,,,,,,,,,,,,,,
9,1,,172179-45210,,SHAFT,1,1,,,,,,,,,,,,,,,,
10,1,,22217-100000,,"SPRING WASHER 10",1,1,,,,,,,,,,,,,,,,
11,1,,22351-040032,,"SPRING PIN 4X32",1,1,,,,,,,,,,,,,,,,
12,1,,24311-000210,,"O-RING 1A P-21.0",2,2,,,,,,,,,,,,,,,,
13,1,,24761-020000,,"NIPPLE PT1/8,GREASE",1,1,,,,,,,,,,,,,,,,
14,1,,24761-050000,,"NIPPLE C,GREASE",1,1,,,,,,,,,,,,,,,,
15,1,,26051-080002,,"NUT M 8",6,6,,,,,,,,,,,,,,,,
16,1,,26013-100202,,"BOLT W/WASHER M10X20",2,2,,,,,,,,,,,,,,,,
17,1,,26013-100252,,"BOLT W/WASHER M10X25",2,2,,,,,,,,,,,,,,,,
18,1,,26116-100202,,"BOLT M10X 20 PLATED",1,1,,,,,,,,,,,,,,,,
19,1,,172174-46360,,"SPRING  8",4,4,,,,,,,,,,,,,,,,
20,1,,172157-45990,,"BOOTS, PEDAL",1,1,,,,,,,,,,,,,,,,
21,1,,172174-46230,,"SHAFT, SWING",2,2,,,,,,,,,,,,,,,,
22,1,,172174-46260,,"COVER, PEDAL",2,2,,,,,,,,,,,,,,,,
23,1,,172174-46280,,"PEDAL COMP.,SWING",1,1,,,,,,,,,,,,,,,,
24,1,,172174-46350,,BOLT,2,2,,,,,,,,,,,,,,,,
25,1,,22137-080000,,"WASHER 8, POLISHED",2,2,,,,,,,,,,,,,,,,
26,1,,22351-040020,,"SPRING PIN 4X20",2,2,,,,,,,,,,,,,,,,
27,1,,26116-080254,,"BOLT M 8X 25 PLATED",2,2,,,,,,,,,,,,,,,,
28,1,,26716-080002,,"NUT M 8",2,2,,,,,,,,,,,,,,,,
29,1,,26756-080002,,"LOCK NUT M 8 PLATED",4,4,,,,,,,,,,,,,,,,
30,1,,172122-46590,,"ELBALL 8",3,3,,,,,,,,,,,,,,,,
31,1,,172179-45620,,"ROD 365",1,1,,,,,,,,,,,,,,,,
32,1,,172179-45700,,ROD,1,1,,,,,,,,,,,,,,,,
33,1,,22417-160160,,"COTTER PIN 1.6X16",1,1,,,,,,,,,,,,,,,,
34,1,,22137-080000,,"WASHER 8, POLISHED",3,3,,,,,,,,,,,,,,,,
35,1,,172159-42910,,"PIN 4.75X14",1,1,,,,,,,,,,,,,,,,
```

Fig. 16 ソウジュウソウチ(スイング) CONTROL EQUIPMENT(SWING)

https://truckmanualshub.com/

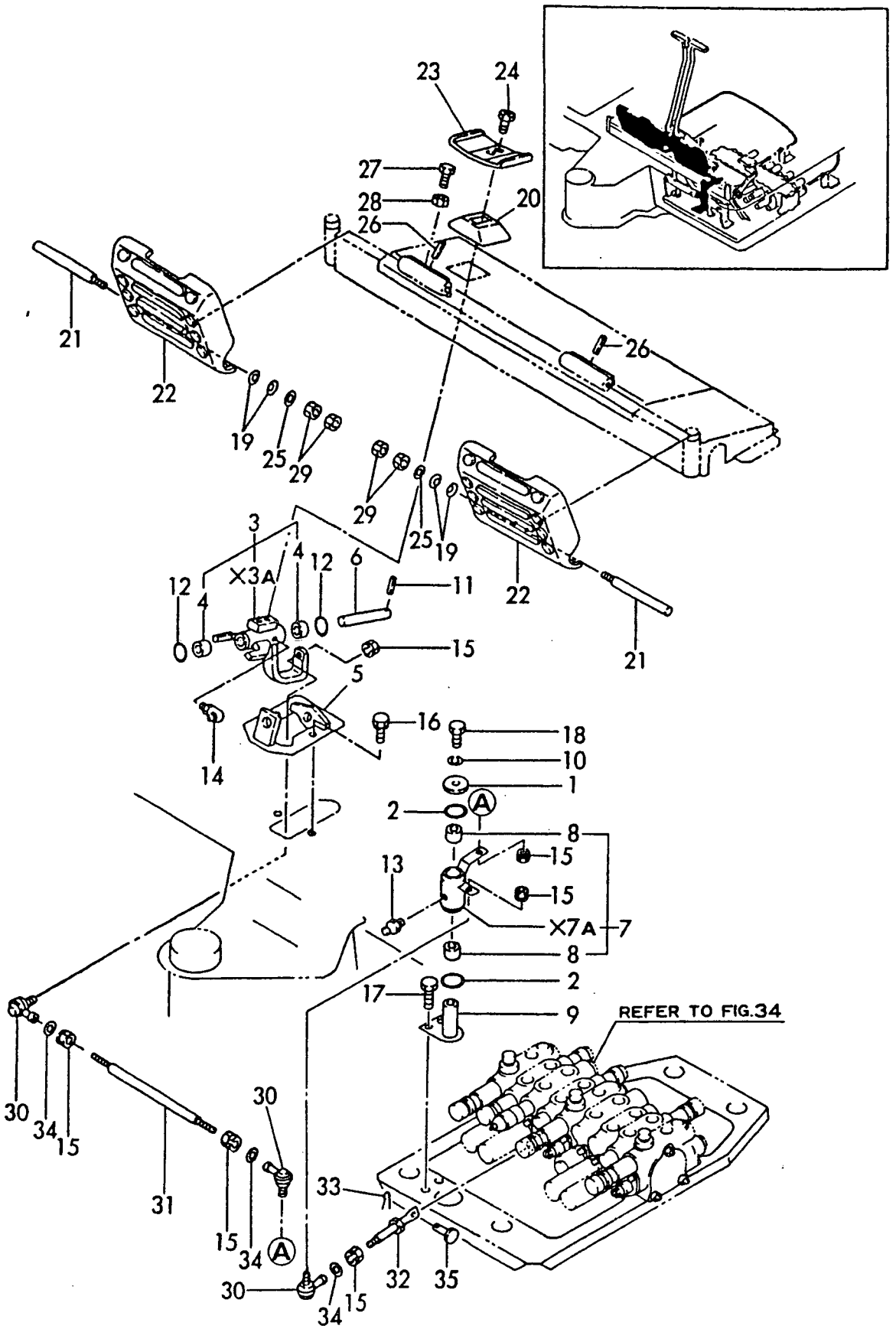

https://truckmanualshub.com/

```
1,1,,172179-45270,,"LEVER ASSY, BLADE",1,1,,,,,,,,,,,,,,,,,
1-1,1,,172179-45271,,"LEVER ASSY, BLADE
S",1,1,,,,,S,,72184009,M50691,72184009,M50691,,,,,,,,,I
2,1,,172116-45940,,"KNOB (C), LEVER",1,1,,,,,,,,,,,,,,,,,
2-1,1,,172164-45970,,"GRIP,
BLADE",1,1,,,,,S,,72184009,M50691,72184009,M50691,,,,,,,,,I
3,1,,22351-050032,,"SPRING PIN 5X32",1,1,,,,,,,,,,,,,,,,,
4,1,,172174-45300,,"LINK, BLADE",1,1,,,,,,,,,,,,,,,,,
5,1,,172174-45330,,"BRACKET ASY",1,1,,,,,,,,,,,,,,,,,
6,2,,172161-41360,,"BUSH 1415",2,2,,,,,,,,,,,,,,,,,
7,1,,24311-000210,,"O-RING 1A P-21.0",2,2,,,,,,,,,,,,,,,,,
8,1,,26013-100202,,"BOLT W/WASHER M10X20",3,3,,,,,,,,,,,,,,,,,
9,1,,26116-100354,,"BOLT M10X 35 PLATED",2,2,,,,,,,,,,,,,,,,,
10,1,,26716-100002,,"NUT M10",2,2,,,,,,,,,,,,,,,,,
11,1,,172179-45500,,"CABLE, BLADE",1,1,,,,,,,,,,,,,,,,,
12,1,,172159-42940,,"JOINT, CABLE",1,1,,,,,,,,,,,,,,,,,
13,1,,172179-45600,,"BRACKET, BLADE",1,1,,,,,,,,,,,,,,,,,
14,1,,172174-47110,,"ROD,SPOOL",1,1,,,,,,,,,,,,,,,,,
15,1,,172122-46590,,"ELBALL 8",1,1,,,,,,,,,,,,,,,,,
16,1,,22417-160160,,"COTTER PIN 1.6X16",1,1,,,,,,,,,,,,,,,,,
17,1,,26013-100202,,"BOLT W/WASHER M10X20",2,2,,,,,,,,,,,,,,,,,,
18,1,,26051-080002,,"NUT M 8",1,1,,,,,,,,,,,,,,,,,
19,1,,172159-42910,,"PIN 4.75X14",1,1,,,,,,,,,,,,,,,,,
20,1,,172174-47160,,"WASHER 20X9X3.2",1,1,,,,,,,,,,,,,,,,,
```

Fig. 17 操縦装置（ブレード） CONTROL EQUIPMENT (BLADE)

https://truckmanualshub.com/

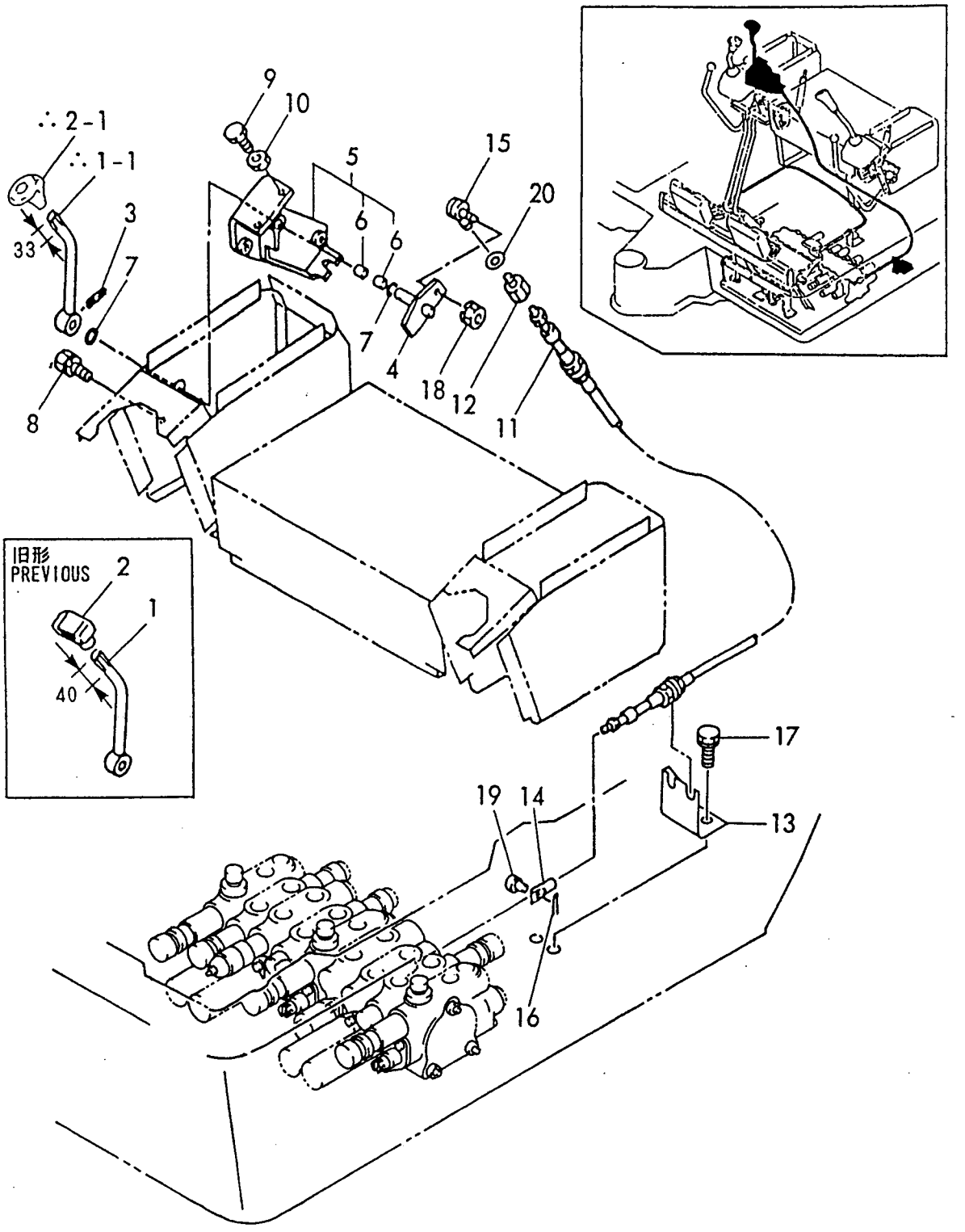

https://truckmanualshub.com/

```
1,1,,172174-45710,,"BRACKET,SAFETY SW.",1,2,,,,,,,,,,,,,,,,
1-1,1,,172174-
45711,,PLATE,1,2,,,,,S,,72174033,*1995.08,72174033,*1995.08,,,,,,,,,I
2,1,,1D4070-23580,,"GRIP,RED ROUND",1,2,,,,,,,,,,,,,,,,
3,1,,172161-46200,,"O-RING 27X5.7",2,4,,,,,,,,,,,,,,,,
4,1,,172174-45800,,"LEVER R CMP.,EP LOCK",,1,,,,,,,,,,,,,,,,
5,1,,172174-44660,,"RUBBER L CMP,EP LOCK",1,1,,,,,,,,,,,,,,,,
6,1,,172174-45720,,"ARM, LOCK",1,2,,,,,,,,,,,,,,,,
7,1,,172174-45760,,BUSH,1,2,,,,,,,,,,,,,,,,
8,1,,172174-45770,,"GUIDE R ASSY, LOCK",,1,,,,,,,,,,,,,,,,
9,1,,172174-44630,,"GUIDE L COMP.,LOCK",1,1,,,,,,,,,,,,,,,,
10,1,,172165-47801,,"SPRING,GAS",1,2,,,,,,,,,,,,,,,,
11,1,,172174-45840,,"SPRING,ROTARY RETURN",1,2,,,,,,,,,,,,,,,,
12,1,,22137-080000,,"WASHER 8, POLISHED",4,4,,,,,,,,,,,,,,,,
13,1,,22137-080000,,"WASHER 8, POLISHED",2,4,,,,,,,,,,,,,,,,
14,1,,22272-000070,,"CIRCLIP E- 7",1,2,,,,,,,,,,,,,,,,
15,1,,22351-060040,,"SPRING PIN 6X40",1,2,,,,,,,,,,,,,,,,
16,1,,22417-200200,,"COTTER PIN 2.0X20",4,4,,,,,,,,,,,,,,,,
17,1,,26013-080202,,"BOLT W/WASHER M8X20",2,4,,,,,,,,,,,,,,,,
18,1,,26013-100202,,"BOLT W/WASHER M10X20",2,4,,,,,,,,,,,,,,,,
19,1,,172174-47970,,BAR,1,,,,,,,,,,,,,,,,
20,1,,172174-45980,,"PIN,SPOOL LINK",1,1,,,,,,,,,,,,,,,,
21,1,,172174-45880,,"BRACKET COMPL.",1,1,,,,,,,,,,,,,,,,
22,1,,172122-45830,,"PAD, METAL",1,1,,,,,,,,,,,,,,,,
23,1,,172174-45910,,"PADAL ASSY, LOW-HIGH",1,1,,,,,,,,,,,,,,,,
24,1,,172174-45940,,"LINK COMP.,LOW-HIGH",1,1,,,,,,,,,,,,,,,,
25,1,,172174-45970,,ROD,1,1,,,,,,,,,,,,,,,,
26,1,,172159-42070,,"PIN 6,COME-OFF SNAP",1,1,,,,,,,,,,,,,,,,
27,1,,22137-100000,,"WASHER 10,POLISHED",1,1,,,,,,,,,,,,,,,,
28,1,,22417-160160,,"COTTER PIN 1.6X16",1,1,,,,,,,,,,,,,,,,
29,1,,24311-000210,,"O-RING 1A P-21.0",2,2,,,,,,,,,,,,,,,,
30,1,,26013-100202,,"BOLT W/WASHER M10X20",2,2,,,,,,,,,,,,,,,,
31,1,,26347-100002,,"U-NUT M10",1,1,,,,,,,,,,,,,,,,
32,1,,172159-42910,,"PIN 4.75X14",1,1,,,,,,,,,,,,,,,,
33,1,,22351-035040,,"SPRING PIN 3.5X40",1,2,,,,,,,,,,,,,,,,
```

Fig. 18 操縦装置(カットオフレバー＆ローハイペダル)
CONTROL EQUIPMENT(CUT OFF LEVER & LOW-HIGH PEDAL)

https://truckmanualclub.com/

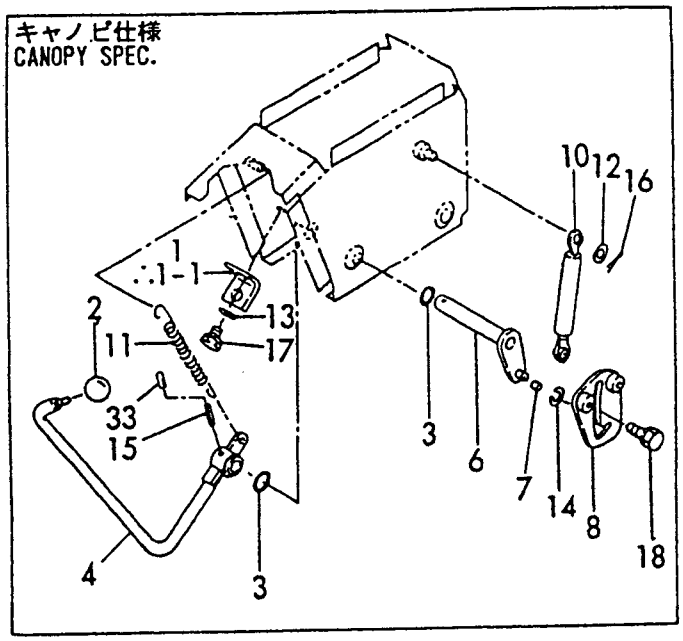

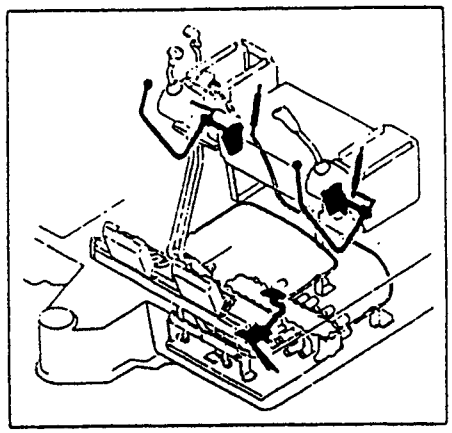

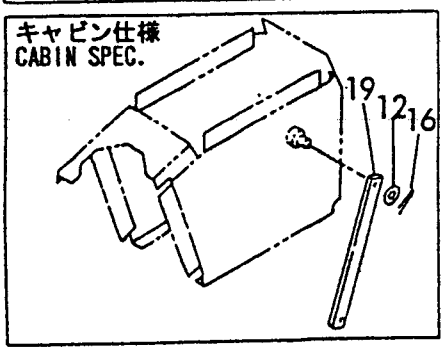

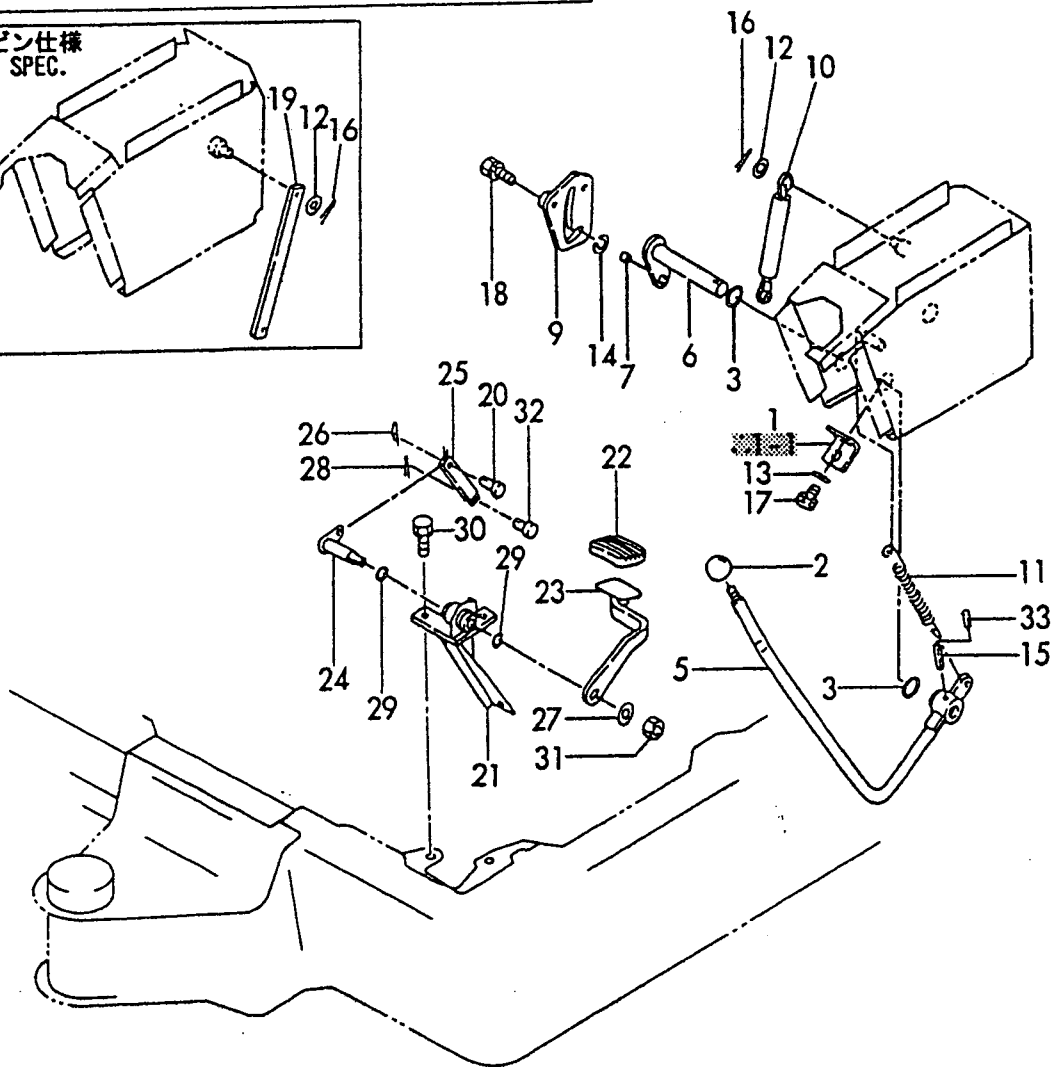

https://truckmanualshub.com/

```
1,1,,172174-47200,,"SPRING, LOCK",1,1,,,,,,,,,,,,,,,,
2,1,,172159-42940,,"JOINT, CABLE",1,1,,,,,,,,,,,,,,,,
3,1,,172165-45260,,CABLE(2300,1,1,,,,,,,,,,,,,,,,
4,1,,172174-47110,,"ROD,SPOOL",1,1,,,,,,,,,,,,,,,,
5,1,,172157-45990,,"BOOTS, PEDAL",1,1,,,,,,,,,,,,,,,,
6,1,,172174-47160,,"WASHER 20X9X3.2",1,1,,,,,,,,,,,,,,,,
7,1,,172174-46280,,"PEDAL COMP.,SWING",1,1,,,,,,,,,,,,,,,,
8,1,,172174-46350,,BOLT,2,2,,,,,,,,,,,,,,,,
9,1,,172174-47260,,"BRACKET, PEDAL",1,1,,,,,,,,,,,,,,,,
10,1,,172174-45510,,"PIN 14X105",1,1,,,,,,,,,,,,,,,,
11,1,,172174-47310,,"LOCK CMP",1,1,,,,,,,,,,,,,,,,
12,1,,172174-47340,,BOLT,1,1,,,,,,,,,,,,,,,,
13,1,,172174-47350,,SHIM,5,5,,,,,,,,,,,,,,,,
14,1,,172122-46590,,"ELBALL 8",1,1,,,,,,,,,,,,,,,,
15,1,,172174-47360,,"LINK, PEDAL",1,1,,,,,,,,,,,,,,,,
16,2,,172161-41360,,"BUSH 1415",2,2,,,,,,,,,,,,,,,,
17,1,,172179-46100,,BRACKET,1,1,,,,,,,,,,,,,,,,
18,1,,22137-080000,,"WASHER 8, POLISHED",2,2,,,,,,,,,,,,,,,,
19,1,,22351-040032,,"SPRING PIN 4X32",1,1,,,,,,,,,,,,,,,,
20,1,,22417-160160,,"COTTER PIN 1.6X16",1,1,,,,,,,,,,,,,,,,
21,1,,24311-000210,,"O-RING 1A P-21.0",2,2,,,,,,,,,,,,,,,,
22,1,,24761-050000,,"NIPPLE C,GREASE",1,1,,,,,,,,,,,,,,,,
23,1,,26013-100202,,"BOLT W/WASHER M10X20",2,2,,,,,,,,,,,,,,,,
24,1,,26013-100202,,"BOLT W/WASHER M10X20",2,2,,,,,,,,,,,,,,,,
25,1,,26051-080002,,"NUT M 8",1,1,,,,,,,,,,,,,,,,
26,1,,26116-080304,,"BOLT M 8X 30 PLATED",2,2,,,,,,,,,,,,,,,,
27,1,,26716-080002,,"NUT M 8",2,2,,,,,,,,,,,,,,,,
28,1,,26756-080002,,"LOCK NUT M 8 PLATED",2,2,,,,,,,,,,,,,,,,
29,1,,172159-42910,,"PIN 4.75X14",1,1,,,,,,,,,,,,,,,,
```

Fig. 19 ソウジュウソウチ（P．T．O．コントロール）
CONTROL EQUIPMENT (P.T.O. CONTROL)

http://mcomanualshub.com/

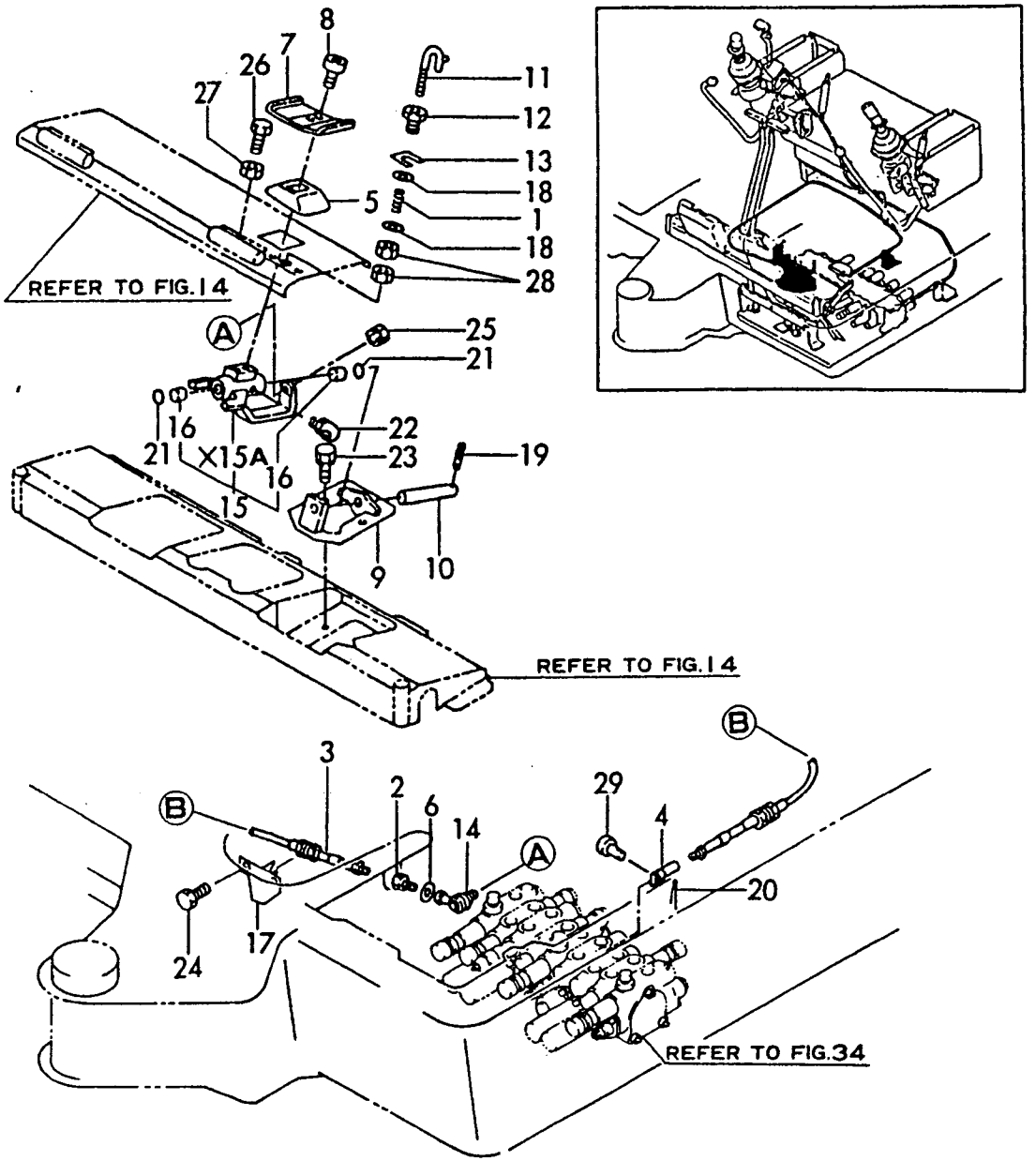

https://truckmanualshub.com/

```
1,1,,172159-51900,,PLATE,4,4,,,,,,,,,,,,,,,,
2,1,,26013-100302,,"BOLT M10X 30",8,8,,,,,,,,,,,,,,,,
3,1,,172180-50100,,"FRAME ASSY,LOWER",1,1,,,,,,,,,,,,,,,,
4,1,,172141-50890,,GROMMET,2,2,,,,,,,,,,,,,,,,
5,1,,172161-50890,,"WASHER 12",7,7,,,,,,,,,,,,,,,,
6,1,,172179-53300,,"WEIGHT ASSY,CENTER",1,1,,,,,,,,,,,,,,,,
7,1,,172179-53321,,"WEIGHT L ASSY",1,1,,,,,,,,,,,,,,,,
8,1,,172161-53350,,"GROMMET 26",4,4,,,,,,,,,,,,,,,,
9,1,,172174-53360,,"BOLT M12X 30",6,6,,,,,,,,,,,,,,,,
10,1,,172179-53381,,"WEIGHT R ASSY",1,1,,,,,,,,,,,,,,,,
11,1,,172179-53430,,"BOLT 12X50",3,3,,,,,,,,,,,,,,,,
12,1,,22217-120000,,"WASHER 12,SPRING",9,9,,,,,,,,,,,,,,,,
13,1,,172180-54100,,"FRAME ASSY,TURNING",1,1,,,,,,,,,,,,,,,,
14,2,,172174-54750,,"BUSH 50X65",2,2,,,,,,,,,,,,,,,,
15,1,,172165-81760,,"SEAL 50X60X4, DUST",2,2,,,,,,,,,,,,,,,,
16,1,,24761-040000,,"NIPPLE B,GREASE",1,1,,,,,,,,,,,,,,,,
17,1,,172180-57600,,"BEARING,SWING",1,1,,,,,,,,,,,,,,,,
18,1,,22312-100250,,"PARALLEL PIN 10X25",4,4,,,,,,,,,,,,,,,,
19,1,,26116-120302,,"BOLT M12X 30 PLATED",18,18,,,,,,,,,,,,,,,,
20,1,,26116-120452,,"BOLT M12X 45 PLATED",18,18,,,,,,,,,,,,,,,,
```

Fig. 20 フレーム&センカイベアリング FRAME & TURNING BEARING

https://truckmanuals.club.com/

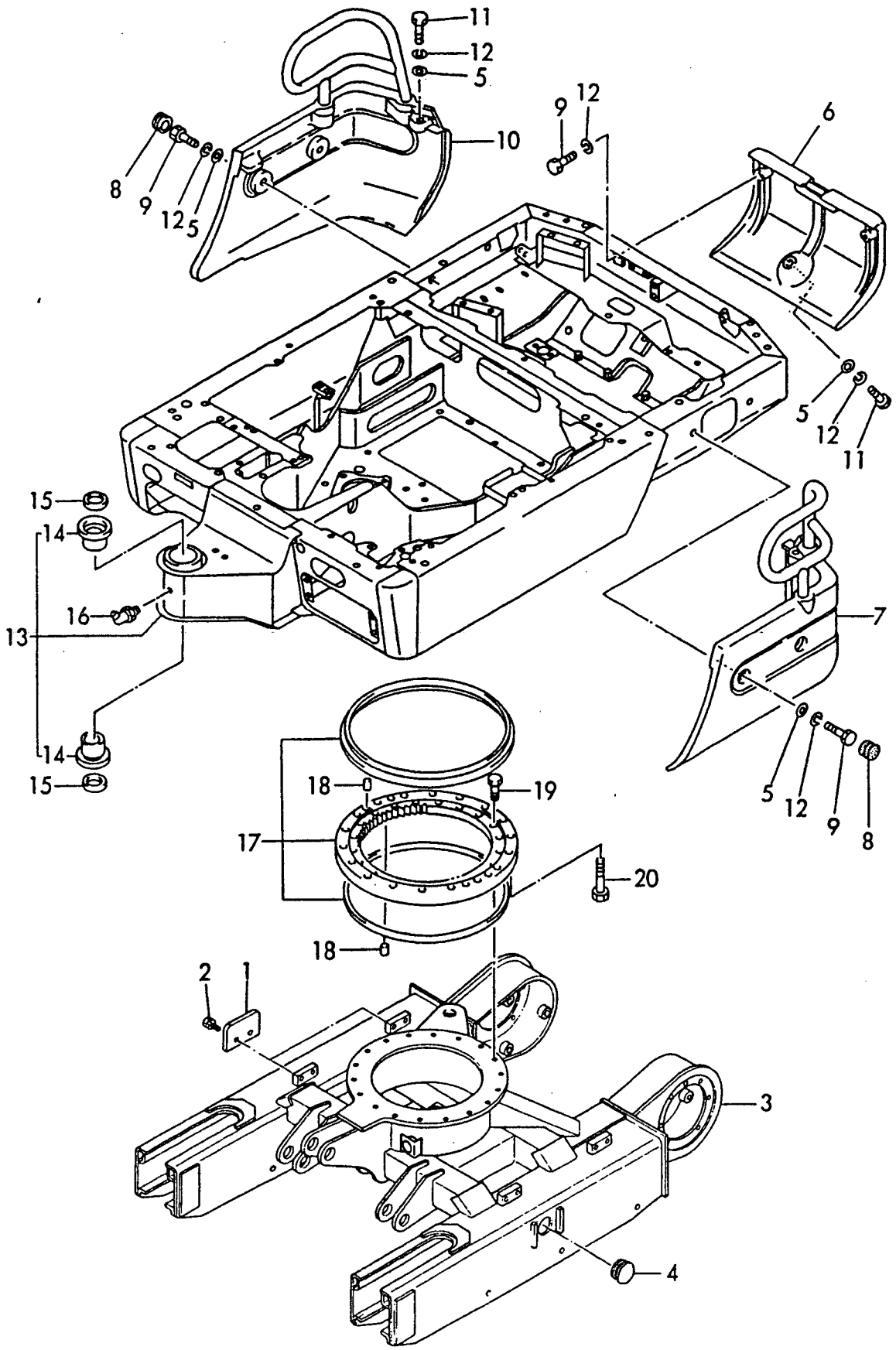

```
1,1,,172174-44850,,"BOLT  8X 16",4,4,,,,,,,,,,,,,,,
2,1,,172179-61100,,"COVER,BATTER",1,1,,,,,,,,,,,,,,,
3,1,,172180-61110,,"COVER A",1,1,,,,,,,,,,,,,,,
4,1,,172179-61120,,"COVER B",1,1,,,,,,,,,,,,,,,
5,1,,172180-61120,,"COVER G",1,1,,,,,,,,,,,,,,,
6,1,,172180-61130,,"COVER C",1,1,,,,,,,,,,,,,,,
7,1,,172180-61140,,"COVER D ASSY",1,1,,,,,,,,,,,,,,,
8,1,,172180-61160,,"COVER,TRAVEL-M",2,2,,,,,,,,,,,,,,,
9,1,,172179-61170,,"COVER E",1,1,,,,,,,,,,,,,,,
10,1,,172179-61180,,"COVER F",1,1,,,,,,,,,,,,,,,
11,1,,172179-61190,,"COVER ASSY,LUMP",1,1,,,,,,,,,,,,,,,
12,1,,172179-61350,,"COVER H ASSY",1,1,,,,,,,,,,,,,,,
13,1,,172179-61390,,"COVER,UNDER",1,1,,,,,,,,,,,,,,,
14,1,,22137-100000,,"WASHER 10,POLISHED",7,7,,,,,,,,,,,,,,,
15,1,,22217-100000,,"SPRING WASHER 10",6,6,,,,,,,,,,,,,,,
16,1,,22217-100000,,"SPRING WASHER 10",30,30,,,,,,,,,,,,,,,
17,1,,22217-100000,,"SPRING WASHER 10",4,4,,,,,,,,,,,,,,,
18,1,,26013-100252,,"BOLT W/WASHER M10X25",4,4,,,,,,,,,,,,,,,
19,1,,26116-100202,,"BOLT M10X 20 PLATED",6,6,,,,,,,,,,,,,,,
20,1,,26116-100202,,"BOLT M10X 20 PLATED",30,30,,,,,,,,,,,,,,,
21,1,,26116-100202,,"BOLT M10X 20 PLATED",4,4,,,,,,,,,,,,,,,
22,1,,26647-100152,,"WING BOLT M10X15",2,2,,,,,,,,,,,,,,,
23,1,,172179-61450,,COVER,1,1,,,,,,,,,,,,,,,
25,2,,172179-61470,,COVER,1,1,,,,,,,,,,,,,,,
26,1,,172174-61700,,"COVER COMP.,BL LINK",1,1,,,,,,,,,,,,,,,
27,1,,172174-61720,,RUBBER,1,1,,,,,,,,,,,,,,,
28,1,,172174-44850,,"BOLT  8X 16",2,2,,,,,,,,,,,,,,,
29,1,,172179-61210,,"COVER G ASSY",,1,,,,,,,,,,,,,,,
30,1,,172179-61230,,"COVER L ASSY",,1,,,,,,,,,,,,,,,
31,1,,172179-61290,,"COVER R ASSY",,1,,,,,,,,,,,,,,,
32,1,,172165-61801,,PLUG,,2,,,,,,,,,,,,,,,
33,1,,22137-100000,,"WASHER 10,POLISHED",,2,,,,,,,,,,,,,,,
34,1,,22217-100000,,"SPRING WASHER 10",,6,,,,,,,,,,,,,,,
35,1,,26116-100202,,"BOLT M10X 20 PLATED",,6,,,,,,,,,,,,,,,
36,1,,26013-100352,,"BOLT M10X 35",,2,,,,,,,,,,,,,,,
37,1,,172179-61320,,"TOOL BOX ASSY",1,,,,,,,,,,,,,,,
38,1,,172159-65930,,"WASHER 10",2,,,,,,,,,,,,,,,
39,1,,26013-100502,,"BOLT M10X 50",2,,,,,,,,,,,,,,,
40,1,,172179-65590,,LOCK,1,,,,,,,,,,,,,,,
41,1,,172179-65580,,KEY,1,,,,,,,,,,,,,,,
42,2,,26347-100002,,"U-NUT M10",1,,,,,,,,,,,,,,,
43,1,,172179-62490,,COVER,1,,,,,,,,,,,,,,,
44,2,,172179-62600,,HEATER,2,,,,,,,,,,,,,,,
45,2,,172179-62590,,HEATER,2,,,,,,,,,,,,,,,
47,1,,22217-100000,,"SPRING WASHER 10",3,,,,,,,,,,,,,,,
48,1,,26116-100202,,"BOLT M10X 20 PLATED",3,,,,,,,,,,,,,,,
49,1,,26366-100002,,"NUT M10",4,,,,,,,,,,,,,,,
50,1,,172179-62650,,,1,,,,,,,,,,,,,,,
```

Fig. 21 フレームカバー FRAME COVER

https://truckmanualshub.com/

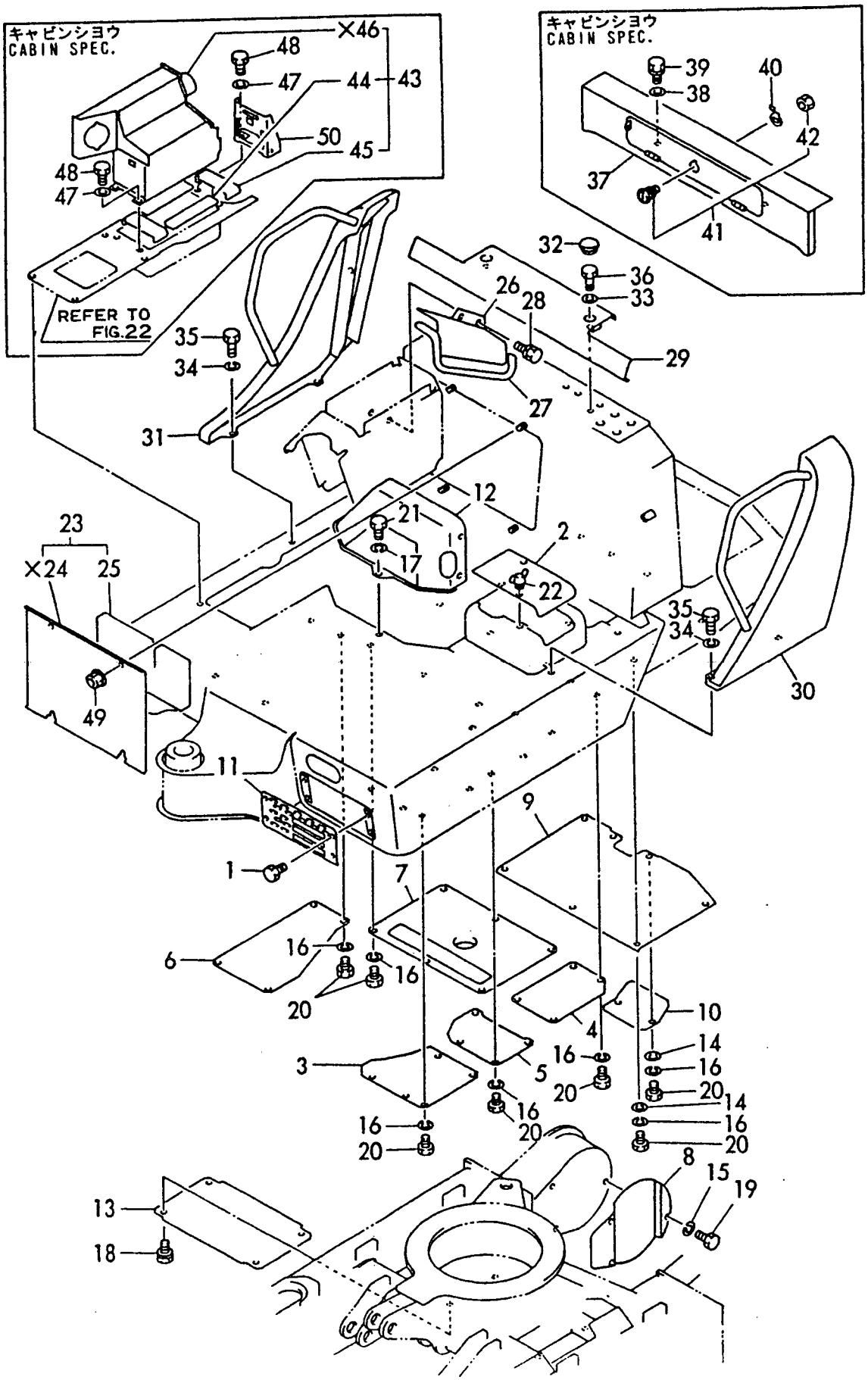

https://truckmanualshub.com/

```
1,1,,172116-46630,,"KNOB, LOCK LEVER",1,1,,,,,,,,,,,,,,,,
2,1,,172180-58800,,"PIN ASSY,LOCK",1,1,,,,,,,,,,,,,,,,
3,1,,172179-62100,,"STEP F",1,1,,,,,,,,,,,,,,,,
4,1,,172179-62110,,"STEP R ASSY",1,1,,,,,,,,,,,,,,,,
5,1,,172179-62160,,"WINDOW,BATTERY",1,1,,,,,,,,,,,,,,,,
6,1,,172179-62200,,"STEP L ASSY",,1,,,,,,,,,,,,,,,,
7,1,,172174-62451,,"WING BOLT 12X15",1,1,,,,,,,,,,,,,,,,
8,1,,172179-62450,,"MAT,FLOOR",1,1,,,,,,,,,,,,,,,,
9,1,,22217-100000,,"SPRING WASHER 10",10,10,,,,,,,,,,,,,,,,
10,1,,22217-100000,,"SPRING WASHER 10",9,9,,,,,,,,,,,,,,,,
11,1,,22417-320200,,"COTTER PIN 3.2X20",1,1,,,,,,,,,,,,,,,,
12,1,,26116-100202,,"BOLT M10X 20 PLATED",10,10,,,,,,,,,,,,,,,,
13,1,,26116-100202,,"BOLT M10X 20 PLATED",9,9,,,,,,,,,,,,,,,,
14,1,,26589-040122,,"SCREW 4X12",4,4,,,,,,,,,,,,,,,,
15,1,,26716-040002,,"NUT M 4",4,4,,,,,,,,,,,,,,,,
16,1,,172179-62510,,"STEP R ASSY",1,,,,,,,,,,,,,,,,,,
17,1,,172122-17190,,CLIP,,3,,,,,,,,,,,,,,,,
18,1,,172157-54850,,"GROMMET 18",,1,,,,,,,,,,,,,,,,
19,1,,172165-68250,,"PLUG,RUBBER",,1,,,,,,,,,,,,,,,,,,
20,1,,194300-21460,,CAP,,1,,,,,,,,,,,,,,,,
21,1,,172174-44850,,"BOLT  8X 16",16,16,,,,,,,,,,,,,,,,
22,1,,172179-63100,,"CONSOLE L.H",1,1,,,,,,,,,,,,,,,,
23,1,,172174-63600,,"COVER R.H,CONSOLE",1,1,,,,,,,,,,,,,,,,,
24,1,,172174-63620,,"COVER L.H,CONSOLE",1,1,,,,,,,,,,,,,,,,
25,1,,172165-63650,,"PLUG 10,HOLE",1,3,,,,,,,,,,,,,,,,
26,1,,172174-63700,,"CONSOLE R.H",1,1,,,,,,,,,,,,,,,,
27,1,,172179-64200,,"MOUNT ASSY,SEAT",1,1,,,,,,,,,,,,,,,,
28,1,,26013-080162,,"BOLT W/WASHER M8X16",4,4,,,,,,,,,,,,,,,,
29,1,,26013-080502,,"BOLT M 8X 50",4,4,,,,,,,,,,,,,,,,
30,1,,26013-100202,,"BOLT W/WASHER M10X20",4,4,,,,,,,,,,,,,,,,
31,1,,172174-62440,,"RUBBER 90,EDGE",2,2,,,,,,,,,,,,,,,,
32,1,,172179-64250,,SUSPENSION,1,1,,,,,,,,,,,,,,,,
```

Fig. 22 シートマウント＆ステップ SEAT MOUNT & STEP

https://truckmanualshub.com/

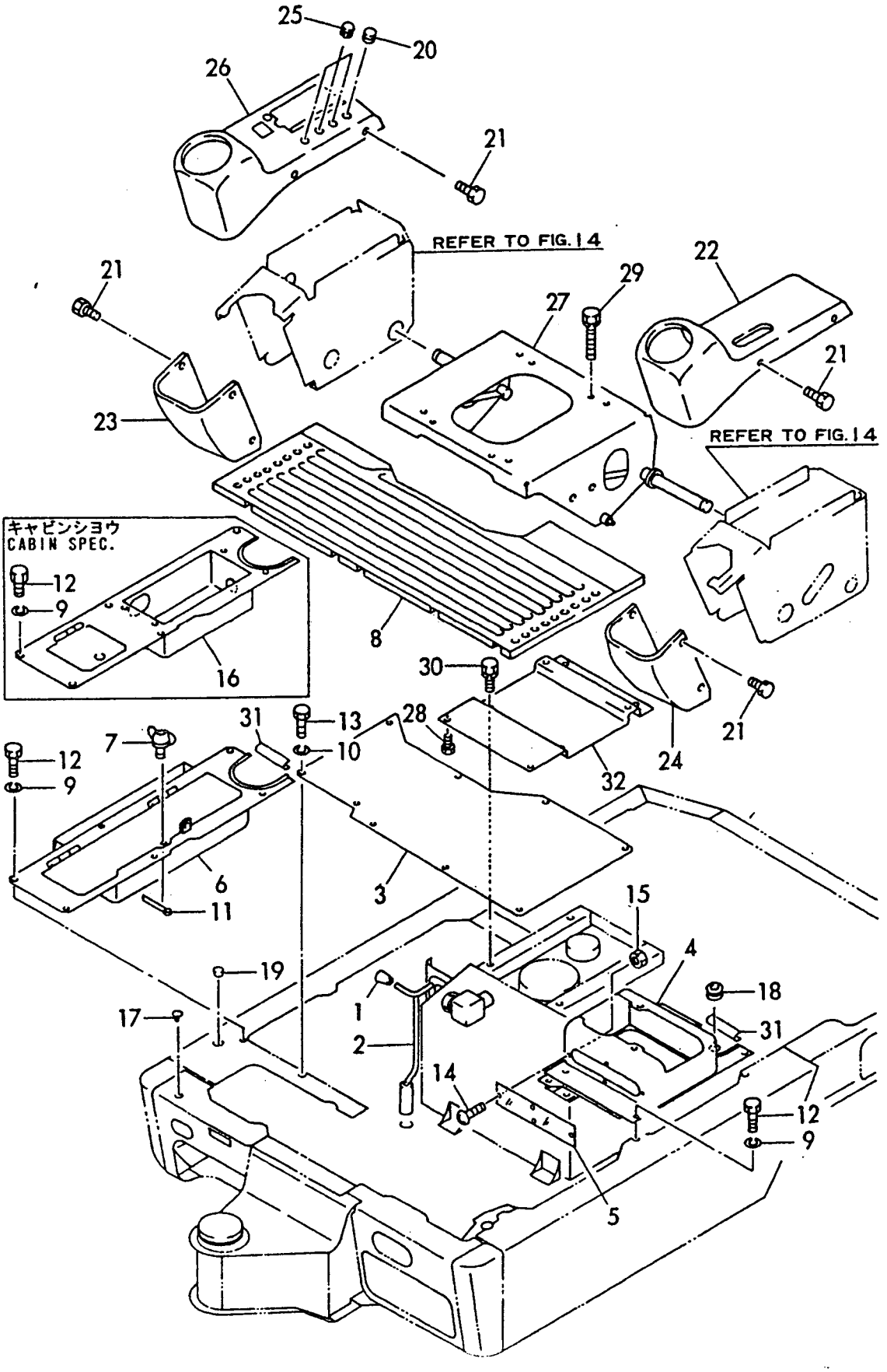

https://truckmanualshub.com/

```
1,1,,172159-65050,,"LEVER, LOCK",1,1,,,,,,,,,,,,,,,
2,1,,172161-65070,,"HOOK COMP.,KEY",1,1,,,,,,,,,,,,,,,
3,1,,172179-65100,,BONNET,1,1,,,,,,,,,,,,,,,
4,2,,172179-65230,,BONNET,1,1,,,,,,,,,,,,,,,
5,2,,172179-65240,,BONNET,1,1,,,,,,,,,,,,,,,
7,2,,172179-65780,,"SEAL, RUBBER",1,1,,,,,,,,,,,,,,,
8,1,,172179-65250,,"BONNET B ASSY, EV",1,1,,,,,,,,,,,,,,,
9,2,,172179-65360,,"NOISE ABSORBER",1,1,,,,,,,,,,,,,,,
10,2,,172179-65790,,"SEAL, RUBBER",1,1,,,,,,,,,,,,,,,
12,1,,172179-65410,,"BONNET A ASSY",1,1,,,,,,,,,,,,,,,
13,1,,172126-65500,,KEY,1,1,,,,,,,,,,,,,,,
14,2,,172126-65571,,"WASHER LOCK",1,1,,,,,,,,,,,,,,,
15,2,,26347-100002,,"U-NUT M10",1,1,,,,,,,,,,,,,,,
16,1,,172179-65610,,"DUCT A ASSY",1,1,,,,,,,,,,,,,,,
17,1,,172179-65630,,DUCT,1,1,,,,,,,,,,,,,,,
18,1,,172159-65690,,"PLATE,CATCH",1,1,,,,,,,,,,,,,,,
19,1,,172179-65700,,"STAY A",1,1,,,,,,,,,,,,,,,
20,1,,172179-65720,,"STAY B",1,1,,,,,,,,,,,,,,,
21,1,,172179-65870,,"SEAL,DUCT",1,1,,,,,,,,,,,,,,,
22,1,,172179-65750,,"RUBBER,SEAL295",2,2,,,,,,,,,,,,,,,
23,1,,172179-65760,,"RUBBER,SEAL240",1,1,,,,,,,,,,,,,,,
24,1,,172179-65770,,"RUBBER,SEAL100",1,1,,,,,,,,,,,,,,,
25,1,,172179-65800,,"RUBBER,SEAL350",1,1,,,,,,,,,,,,,,,
26,1,,172179-65820,,"GAS SPRING",1,1,,,,,,,,,,,,,,,
27,1,,172179-65850,,"PIPE ASSY,EXTHAUST",1,1,,,,,,,,,,,,,,,
28,1,,172159-65930,,"WASHER 10",4,4,,,,,,,,,,,,,,,
29,1,,172159-65930,,"WASHER 10",8,8,,,,,,,,,,,,,,,
30,1,,172159-65930,,"WASHER 10",5,5,,,,,,,,,,,,,,,
31,1,,172159-65940,,"PIN, BONNET LEVER",1,1,,,,,,,,,,,,,,,
32,1,,172159-65950,,CATCHER,1,1,,,,,,,,,,,,,,,
33,1,,172159-65960,,"SPRING CATCH",1,1,,,,,,,,,,,,,,,
34,1,,22137-080000,,"WASHER 8, POLISHED",2,2,,,,,,,,,,,,,,,
35,1,,22137-100000,,"WASHER 10,POLISHED",2,2,,,,,,,,,,,,,,,
36,1,,22157-080000,,"WASHER  8",2,2,,,,,,,,,,,,,,,
37,1,,22217-080000,,"SPRING WASHER  8",2,2,,,,,,,,,,,,,,,
38,1,,22217-080000,,"SPRING WASHER  8",3,3,,,,,,,,,,,,,,,
39,1,,22217-100000,,"SPRING WASHER 10",2,2,,,,,,,,,,,,,,,
40,1,,22217-100000,,"SPRING WASHER 10",4,4,,,,,,,,,,,,,,,
41,1,,22417-200200,,"COTTER PIN 2.0X20",2,2,,,,,,,,,,,,,,,
42,1,,22417-200200,,"COTTER PIN 2.0X20",2,2,,,,,,,,,,,,,,,
43,1,,26013-100252,,"BOLT W/WASHER M10X25",4,4,,,,,,,,,,,,,,,
44,1,,26013-100252,,"BOLT W/WASHER M10X25",4,4,,,,,,,,,,,,,,,
45,1,,26013-100252,,"BOLT W/WASHER M10X25",4,4,,,,,,,,,,,,,,,
46,1,,26013-100252,,"BOLT W/WASHER M10X25",2,2,,,,,,,,,,,,,,,
47,1,,26013-100252,,"BOLT W/WASHER M10X25",5,5,,,,,,,,,,,,,,,
48,1,,26013-120352,,"BOLT M12X 35",5,5,,,,,,,,,,,,,,,
49,1,,26116-080162,,"BOLT M 8X 16 PLATED",3,3,,,,,,,,,,,,,,,
50,1,,26116-080202,,"BOLT M 8X 20 PLATED",2,2,,,,,,,,,,,,,,,
51,1,,26116-100202,,"BOLT M10X 20 PLATED",4,4,,,,,,,,,,,,,,,
52,1,,26116-100202,,"BOLT M10X 20 PLATED",2,2,,,,,,,,,,,,,,,
53,1,,172179-65650,,"PLATE, DUCT",1,1,,,,,,,,,,,,,,,
54,1,,172179-65670,,"SEAL, DUCT",1,1,,,,,,,,,,,,,,,
55,1,,172179-65680,,"SEAL, DUCT",1,1,,,,,,,,,,,,,,,
56,1,,172179-65900,,"NOISE ABSORBER",1,1,,,,,,,,,,,,,,,
57,1,,172179-65910,,"NOISE ABSORBER",1,1,,,,,,,,,,,,,,,
58,1,,172119-68600,,BUCK,1,1,,,,,,,,,,,,,,,
59,1,,22117-080000,,"WASHER  8",2,2,,,,,,,,,,,,,,,
60,1,,26116-080202,,"BOLT M 8X 20 PLATED",2,2,,,,,,,,,,,,,,,
61,1,,26716-080002,,"NUT M 8",2,2,,,,,,,,,,,,,,,
```

Fig. 23 ボンネット BONNET

https://truckmanualshub.com/

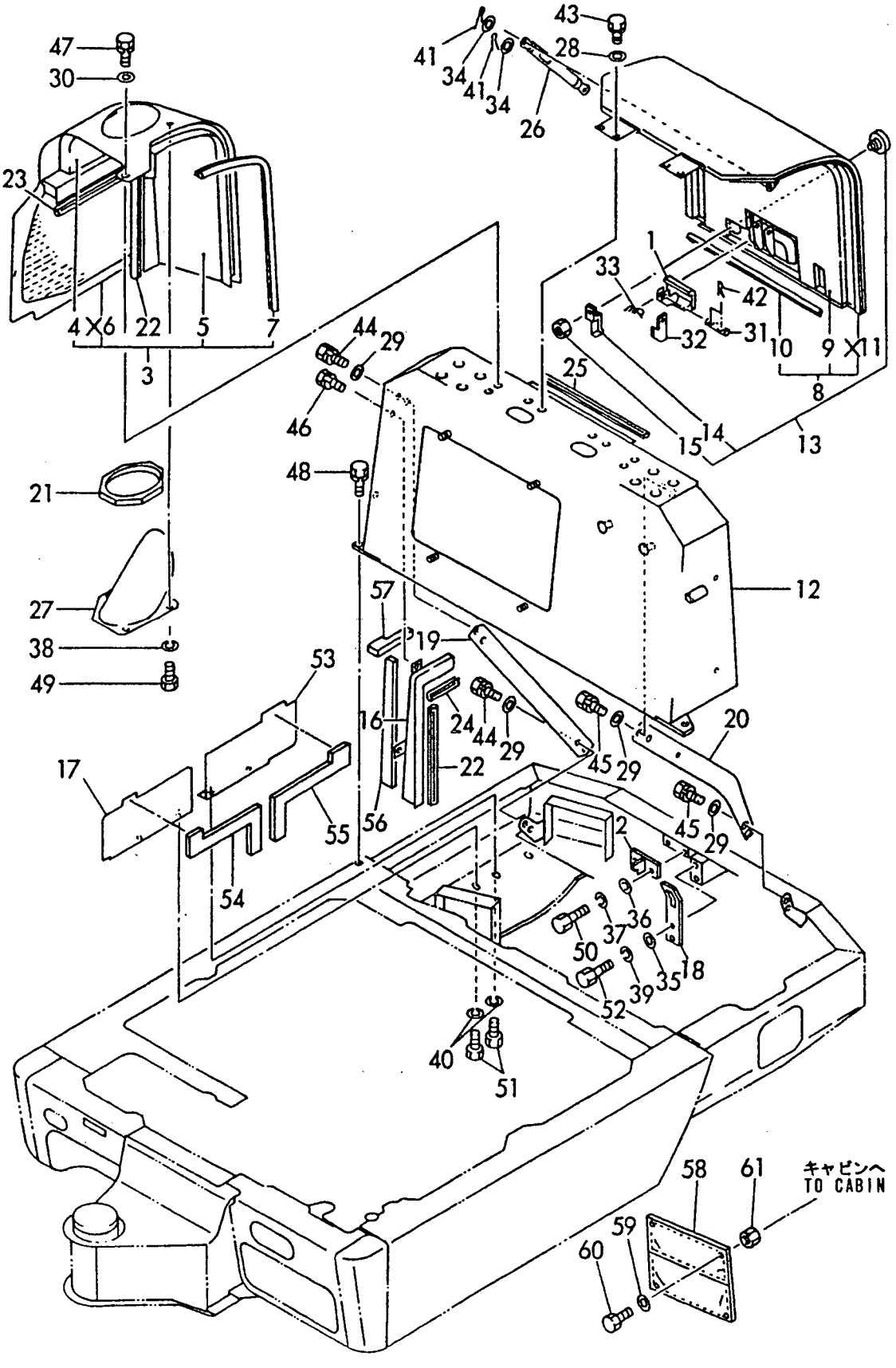

https://truckmanualshub.com/

```
1,1,,172179-68200,,"COLUMN, CANOPY",,1,,,,,,,,,,,,,,,,
2,1,,172179-68250,,"COLUMN L COMPL.",,1,,,,,,,,,,,,,,,,
3,1,,172174-68101,,"ROOF COMP.,CANOPY",,1,,,,,,,,,,,,,,,,,
4,1,,22217-160000,,"SPRING WASHER 16",,8,,,,,,,,,,,,,,,,,
5,1,,26013-120352,,"BOLT M12X 35",,6,,,,,,,,,,,,,,,,,
6,1,,172179-68300,,"BOLT M16X 40 PLATED",,8,,,,,,,,,,,,,,,,,,
7,1,,172179-68350,,"COVER COMP.,FRONT",,1,,,,,,,,,,,,,,,,,
8,1,,26013-120352,,"BOLT M12X 35",,2,,,,,,,,,,,,,,,,,
```

Fig. 24 キャノピ CANOPY

https://truckmanualshub.com/

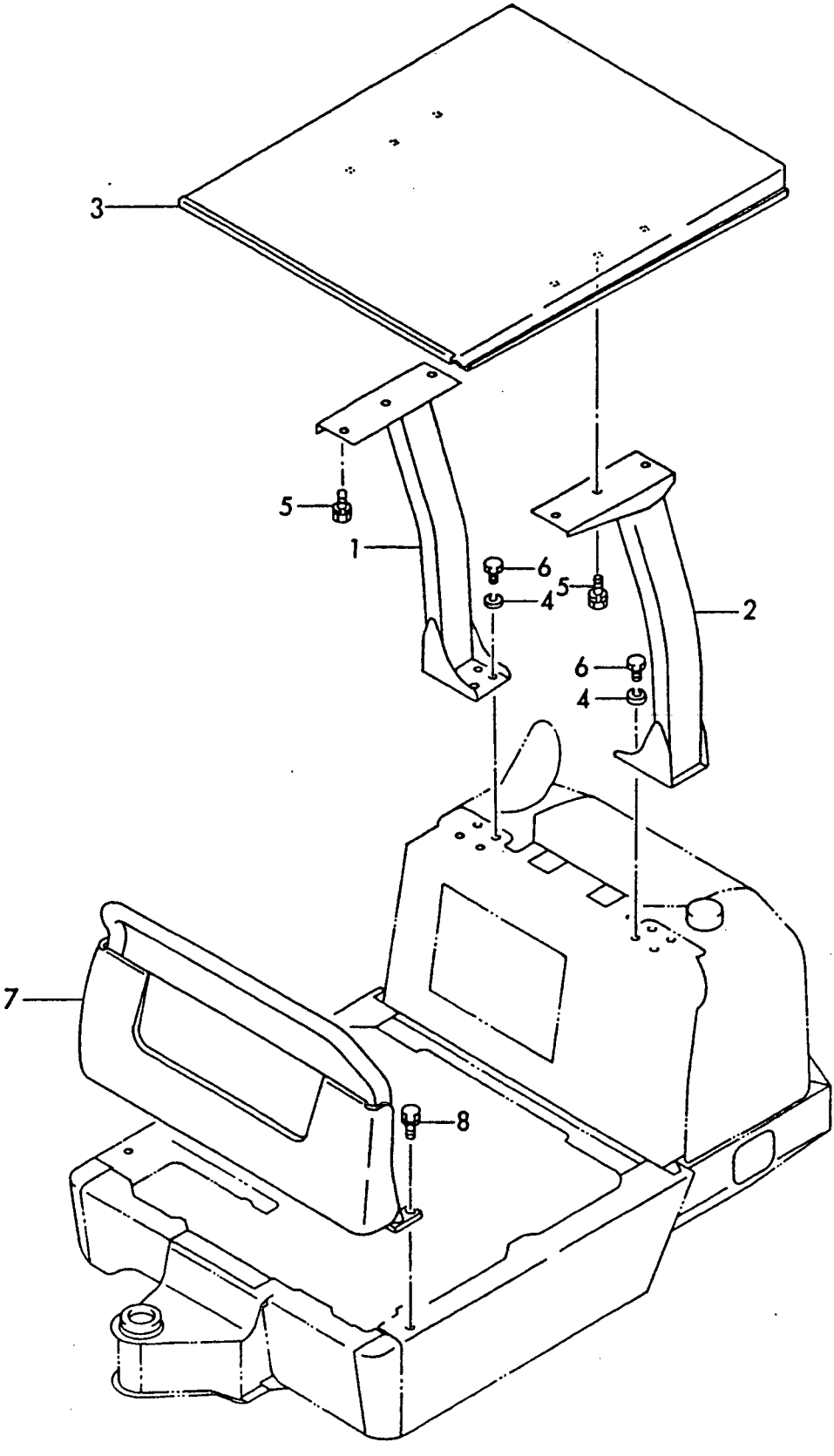

```
1,1,,172179-73100,,"HYD.PUMP ASSY",1,1,,,,,,,,,,,,,,,,
2,2,,172179-73110,,SHAFT.,1,1,,,,,,,,,,,,,,,,
6,3,,172179-73230,,"SEAL TC13 28 7, OIL",1,1,,,,,,,,,,,,,,,,
7,3,,172179-73240,,"GASKET,JOINT",1,1,,,,,,,,,,,,,,,,
10,2,,172179-73120,,"HANGER COMPL.",1,1,,,,,,,,,,,,,,,,
12,3,,24321-000450,,"O-RING 1A G-45.0",1,1,,,,,,,,,,,,,,,,
14,2,,172179-73130,,"ROTORY SET",1,1,,,,,,,,,,,,,,,,
15,2,,172179-73140,,"COVER, AIR CLEANER",1,1,,,,,,,,,,,,,,,,
19,3,,172179-73280,,GASKET,1,1,,,,,,,,,,,,,,,,
22,3,,24315-000080,,"O-RING 1B P-8.0",1,1,,,,,,,,,,,,,,,,
26,2,,172179-73150,,"SPRING COMP.,CONTROL",1,1,,,,,,,,,,,,,,,,
37,3,,24311-000260,,"O-RING 1A P-26.0",1,1,,,,,,,,,,,,,,,,
39,2,,172179-73160,,"PISTON COMP.,CONTROL",1,1,,,,,,,,,,,,,,,,
40,3,,172168-71510,,O-RING,1,1,,,,,,,,,,,,,,,,
47,3,,172179-73540,,O-RING,2,2,,,,,,,,,,,,,,,,
50,2,,172179-73170,,"PUMP ASSY, HYDL.OIL",1,1,,,,,,,,,,,,,,,,
51,3,,172141-71520,,RING,2,2,,,,,,,,,,,,,,,,
52,3,,172141-71550,,O-RING,2,2,,,,,,,,,,,,,,,,
53,3,,172141-71560,,RING,2,2,,,,,,,,,,,,,,,,
59,2,,172179-73180,,HOUSING,1,1,,,,,,,,,,,,,,,,
60,2,,172179-73190,,BUSHING,1,1,,,,,,,,,,,,,,,,
61,2,,24315-000140,,"O-RING 1B P-14.0",1,1,,,,,,,,,,,,,,,,
62,1,,172164-73110,,VALVE,1,1,,,,,,,,,,,,,,,,
63,1,,26013-120252,,"BOLT M12X 25",2,2,,,,,,,,,,,,,,,,
64,1,,172179-71100,,"MOUNT,PUMP",1,1,,,,,,,,,,,,,,,,
65,1,,26013-100252,,"BOLT W/WASHER M10X25",8,8,,,,,,,,,,,,,,,,
66,1,,172179-71200,,"COUPLING,PUMP",1,1,,,,,,,,,,,,,,,,
67,1,,26450-100352,,"BOLT M10X 35",3,3,,,,,,,,,,,,,,,,
```

Fig. 25 ポンプ＆ジクツギテ HYD. OIL PUMP & JOINT

http://truckmanualshub.com/

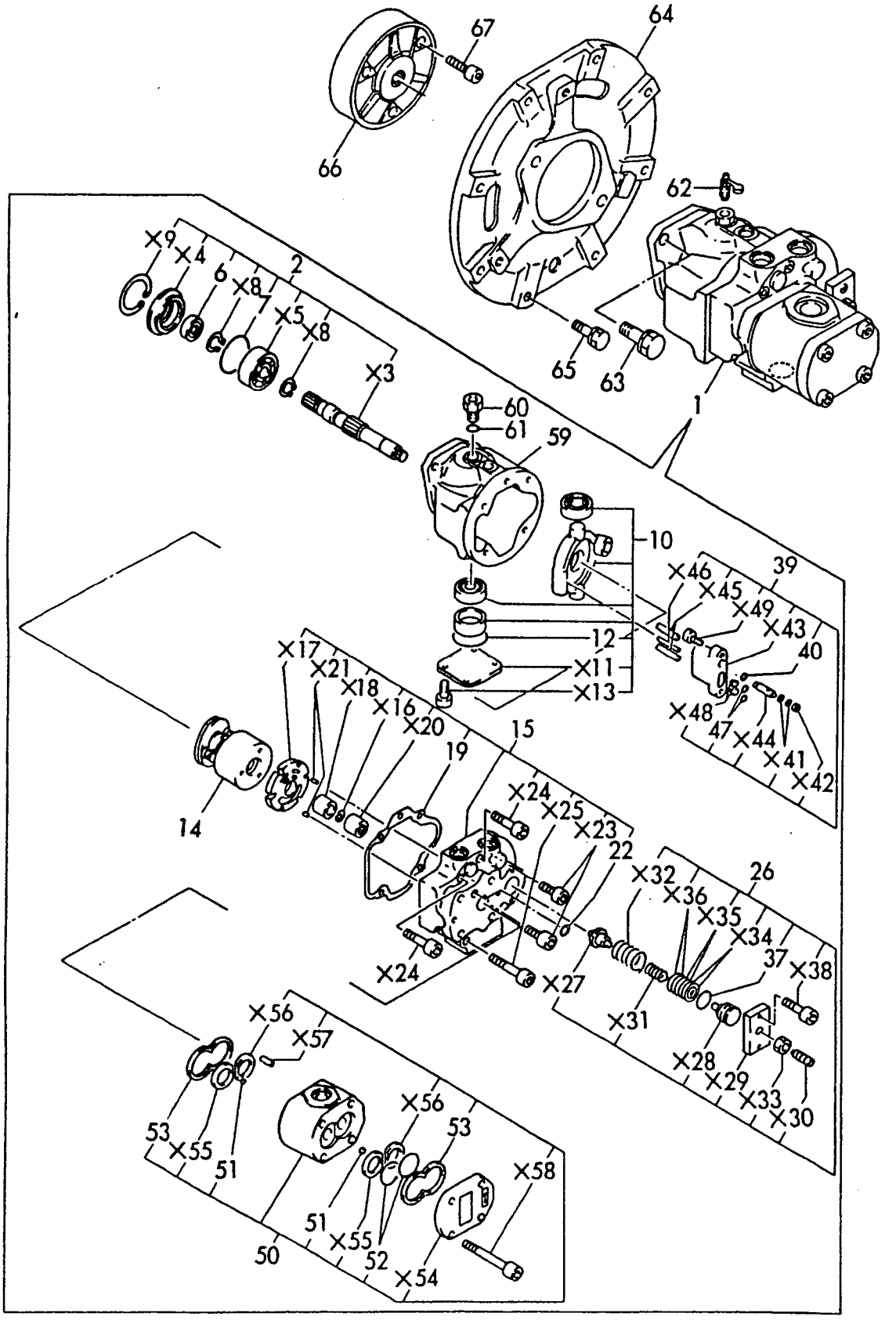

https://truckmanualshub.com/

```
1,1,,172159-72101,,"CYLINDER ASSY, BOOM",1,1,,,,,,,,,,,,,,,,
2,2,,772159-72111,,"TUBE ASSY, CYLINDER",1,1,,,,,,,,,,,,,,,,
4,3,,172174-72560,,"BUSH 35X45X30",1,1,,,,,,,,,,,,,,,,
5,3,,172171-81280,,"SEAL 35X45X4",2,2,,,,,,,,,,,,,,,,
6,2,,772159-72121,,"ROD ASSY, PISTON",1,1,,,,,,,,,,,,,,,,
8,3,,172174-72560,,"BUSH 35X45X30",1,1,,,,,,,,,,,,,,,,
9,3,,172171-81280,,"SEAL 35X45X4",2,2,,,,,,,,,,,,,,,,
10,2,,172159-72130,,"BEARING ASSY",1,1,,,,,,,,,,,,,,,,
11,2,,172159-72140,,PISTON,1,1,,,,,,,,,,,,,,,,
12,2,,172159-72150,,BEARING,1,1,,,,,,,,,,,,,,,,
13,2,,172159-72160,,"LOCK NUT",1,1,,,,,,,,,,,,,,,,
14,2,,172159-72170,,OUTERRING,1,1,,,,,,,,,,,,,,,,
26,2,,24761-040000,,"NIPPLE B,GREASE",1,1,,,,,,,,,,,,,,,,
27,1,,172180-72300,,"COVER,SLIDE",1,1,,,,,,,,,,,,,,,,
28,1,,172159-72860,,SPRING,2,2,,,,,,,,,,,,,,,,
29,1,,22157-100000,,"WASHER 10",1,1,,,,,,,,,,,,,,,,
30,1,,22217-100000,,"SPRING WASHER 10",1,1,,,,,,,,,,,,,,,,
31,1,,26116-100162,,"BOLT M10X 16 PLATED",1,1,,,,,,,,,,,,,,,,
32,1,,172162-61770,,"GUIDE,SLIDE",2,2,,,,,,,,,,,,,,,,
```

Fig. 26 ブームシリンダ BOOM CYLINDER

https://truckmanualshub.com/

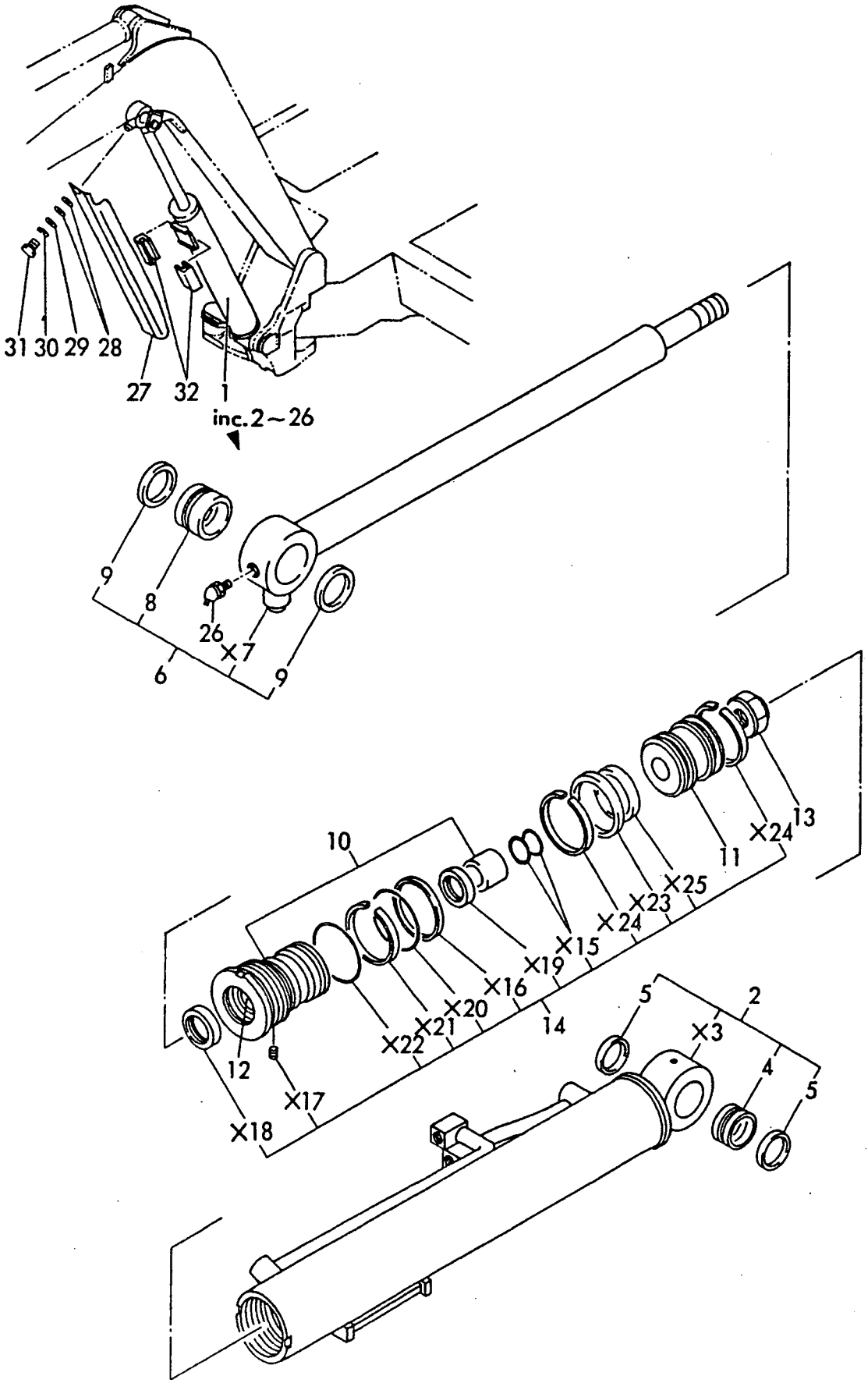

https://truckmanualshub.com/

```
1,1,,172159-72351,,"CYLINDER ASSY, ARM",1,1,,,,,,,,,,,,,,,,
2,2,,172159-72150,,BEARING,1,1,,,,,,,,,,,,,,,,
3,2,,772159-72360,,"TUBE ASSY, CYLINDER",1,1,,,,,,,,,,,,,,,,
5,3,,172180-72150,,"BUSH 30X40X30",1,1,,,,,,,,,,,,,,,,
6,3,,172183-72290,,"SEAL 38X48X 4, DUST",2,2,,,,,,,,,,,,,,,,
7,2,,772159-72370,,"ROD ASSY, PISTON",1,1,,,,,,,,,,,,,,,,
9,3,,172180-72150,,"BUSH 30X40X30",1,1,,,,,,,,,,,,,,,,
10,3,,172183-72290,,"SEAL 38X48X 4, DUST",2,2,,,,,,,,,,,,,,,,
11,2,,172159-72380,,BEARING,1,1,,,,,,,,,,,,,,,,
12,2,,172159-72390,,PISTON,1,1,,,,,,,,,,,,,,,,
13,2,,172159-72400,,"SEAL KIT, ARM",1,1,,,,,,,,,,,,,,,,
24,2,,172159-72420,,"LOCK NUT",1,1,,,,,,,,,,,,,,,,
25,2,,24761-040000,,"NIPPLE B,GREASE",2,2,,,,,,,,,,,,,,,,
```

Fig. 27 アームシリンダ ARM CYLINDER

https://truckmanualshub.com/

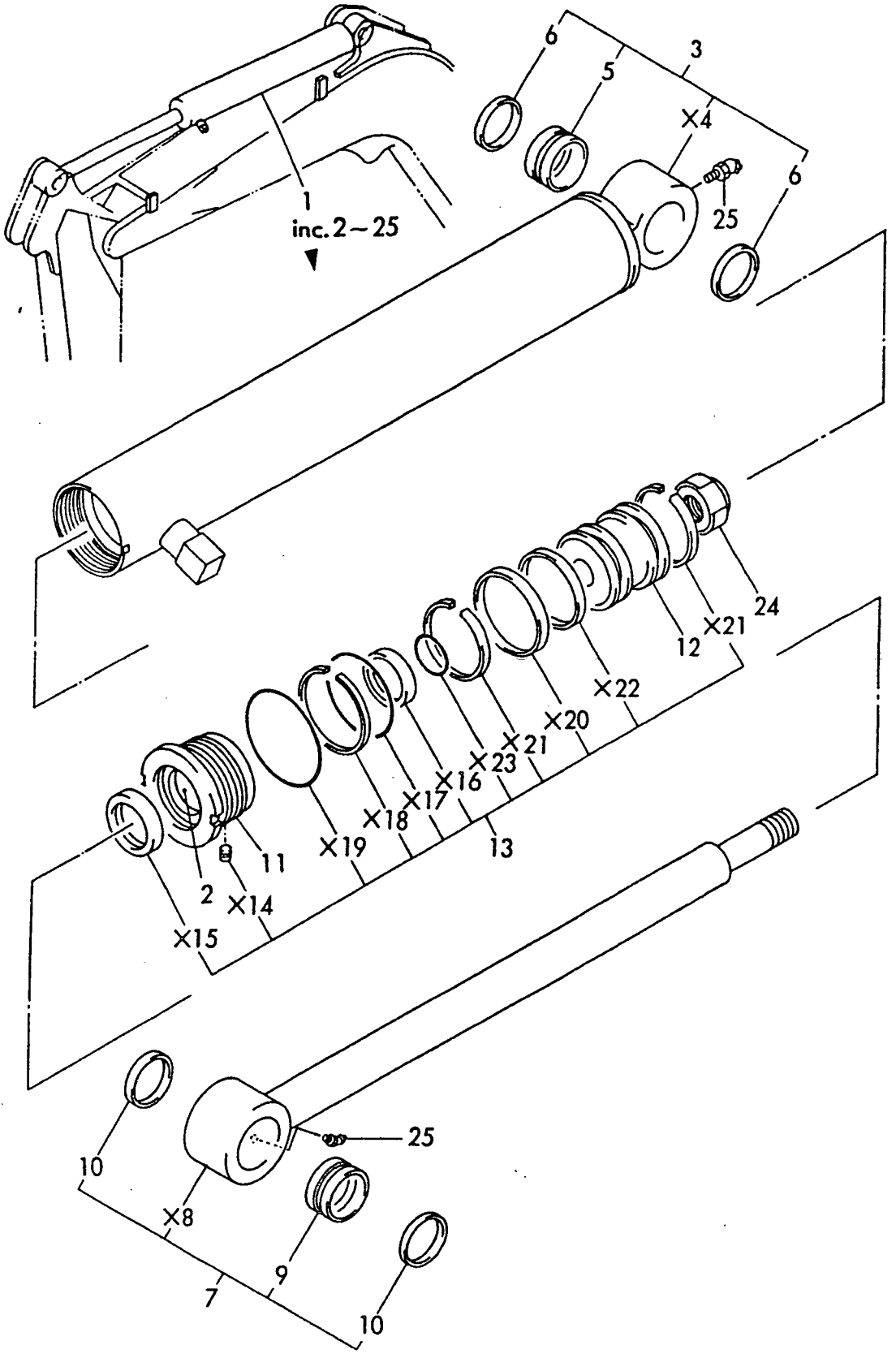

https://truckmanualshub.com/

```
1,1,,172159-72601,,"CYLINDER ASSY,BUCKET",1,1,,,,,,,,,,,,,,,,,
2,2,,172159-72150,,BEARING,1,1,,,,,,,,,,,,,,,,,
3,2,,172159-72380,,BEARING,1,1,,,,,,,,,,,,,,,,,
4,2,,172159-72390,,PISTON,1,1,,,,,,,,,,,,,,,,,
5,2,,172159-72400,,"SEAL KIT, ARM",1,1,,,,,,,,,,,,,,,,,
16,2,,172159-72420,,"LOCK NUT",1,1,,,,,,,,,,,,,,,,,
17,2,,772159-72670,,"TUBE ASSY, CYLINDER",1,1,,,,,,,,,,,,,,,,,
19,3,,172180-72150,,"BUSH 30X40X30",1,1,,,,,,,,,,,,,,,,,
20,3,,172183-72290,,"SEAL 38X48X 4, DUST",2,2,,,,,,,,,,,,,,,,,
21,2,,772159-72680,,"ROD ASSY, PISTON",1,1,,,,,,,,,,,,,,,,,
23,3,,172180-72150,,"BUSH 30X40X30",1,1,,,,,,,,,,,,,,,,,
24,3,,172183-72290,,"SEAL 38X48X 4, DUST",2,2,,,,,,,,,,,,,,,,,
25,2,,24761-040000,,"NIPPLE B,GREASE",1,1,,,,,,,,,,,,,,,,,
```

Fig. 28 バケットシリンダ BUCKET CYLINDER

https://truckmanualshub.com/

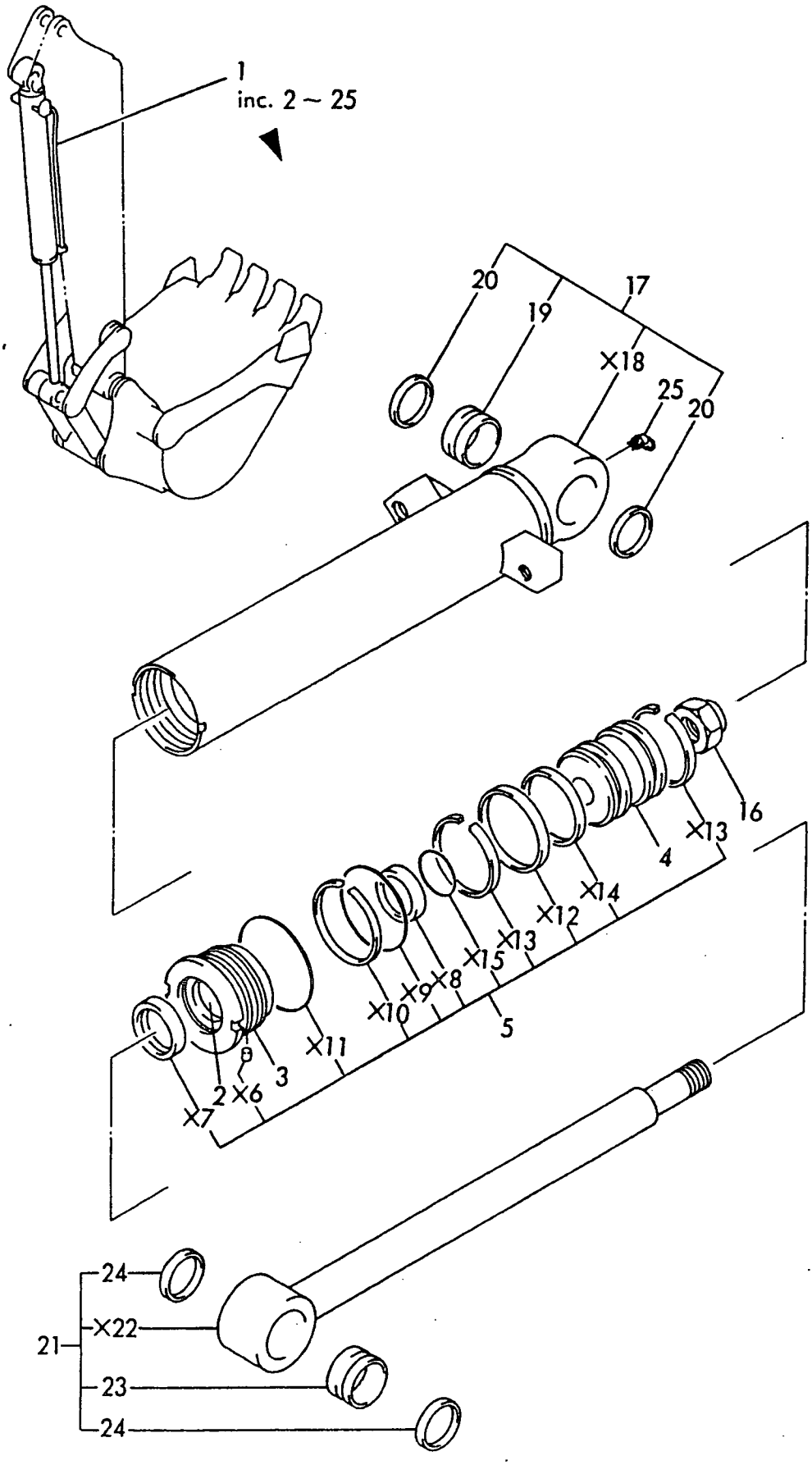

```
1,1,,172159-72451,,"CYLINDER ASSY, SWING",1,1,,,,,,,,,,,,,,,,
2,2,,772159-72460,,"TUBE ASSY, CYLINDER",1,1,,,,,,,,,,,,,,,,
4,3,,172174-72150,,"BUSH 38X48X40",1,1,,,,,,,,,,,,,,,,
5,3,,172122-82290,,"SEAL, DUST",2,2,,,,,,,,,,,,,,,,
6,2,,772159-72470,,"ROD ASSY, PISTON",1,1,,,,,,,,,,,,,,,,
8,3,,172174-72150,,"BUSH 38X48X40",1,1,,,,,,,,,,,,,,,,
9,3,,172122-82290,,"SEAL, DUST",2,2,,,,,,,,,,,,,,,,
10,2,,172159-72480,,"BEARING ASSY",1,1,,,,,,,,,,,,,,,,
11,2,,172159-72490,,PISTON,1,1,,,,,,,,,,,,,,,,
12,2,,172159-72510,,"SEAL KIT",1,1,,,,,,,,,,,,,,,,
25,2,,172159-72650,,BEARING,1,1,,,,,,,,,,,,,,,,
26,2,,24761-020000,,"NIPPLE PT1/8,GREASE",1,1,,,,,,,,,,,,,,,,
27,1,,172159-72830,,"COVER, SWING",1,1,,,,,,,,,,,,,,,,
28,1,,172159-72860,,SPRING,2,2,,,,,,,,,,,,,,,,
29,1,,22157-100000,,"WASHER 10",1,1,,,,,,,,,,,,,,,,
30,1,,22217-100000,,"SPRING WASHER 10",1,1,,,,,,,,,,,,,,,,
31,1,,26116-100162,,"BOLT M10X 16 PLATED",1,1,,,,,,,,,,,,,,,,
```

Fig. 29 スイングシリンダ SWING CYLINDER

https://truckmanualshub.com/

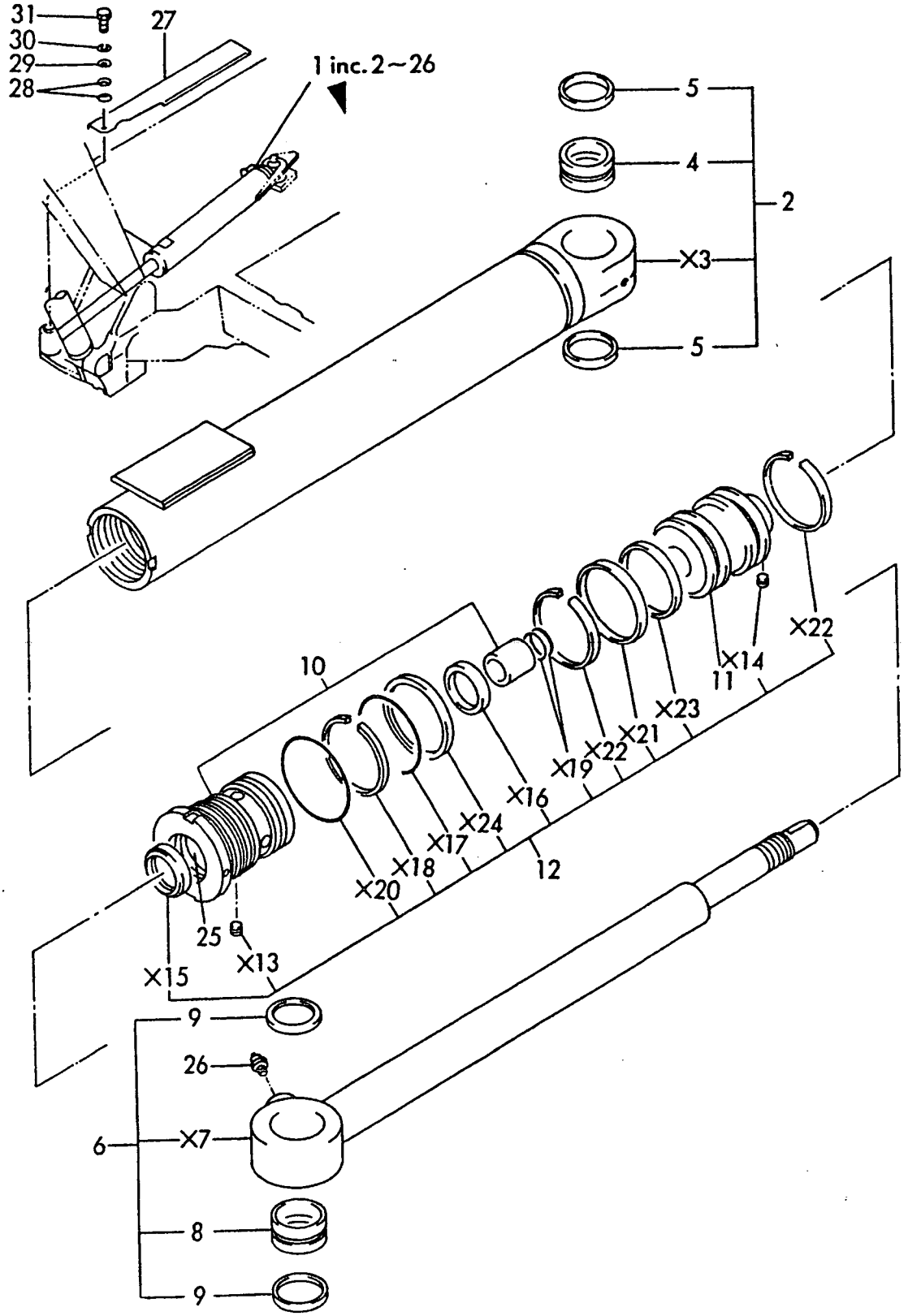

https://truckmanualshub.com/

```
1,1,,172159-72751,,"CYLINDER ASSY, BLADE",1,1,,,,,,,,,,,,,,,,
2,2,,172159-72150,,BEARING,1,1,,,,,,,,,,,,,,,,
3,2,,172159-72380,,BEARING,1,1,,,,,,,,,,,,,,,,
4,2,,172159-72390,,PISTON,1,1,,,,,,,,,,,,,,,,
5,2,,172159-72400,,"SEAL KIT, ARM",1,1,,,,,,,,,,,,,,,,
16,2,,772159-72760,,"TUBE ASSY, CYLINDER",1,1,,,,,,,,,,,,,,,,
18,3,,172180-72150,,"BUSH 30X40X30",1,1,,,,,,,,,,,,,,,,
19,3,,172183-72290,,"SEAL 38X48X 4, DUST",2,2,,,,,,,,,,,,,,,,
20,2,,772159-72770,,"ROD ASSY, PISTON",1,1,,,,,,,,,,,,,,,,
22,3,,172180-72150,,"BUSH 30X40X30",1,1,,,,,,,,,,,,,,,,
23,3,,172183-72290,,"SEAL 38X48X 4, DUST",2,2,,,,,,,,,,,,,,,,
24,2,,172159-72780,,"LOCK NUT",1,1,,,,,,,,,,,,,,,,
```

Fig. 30 ブレードシリンダ BLADE CYLINDER

https://pdfcmanualshub.com/

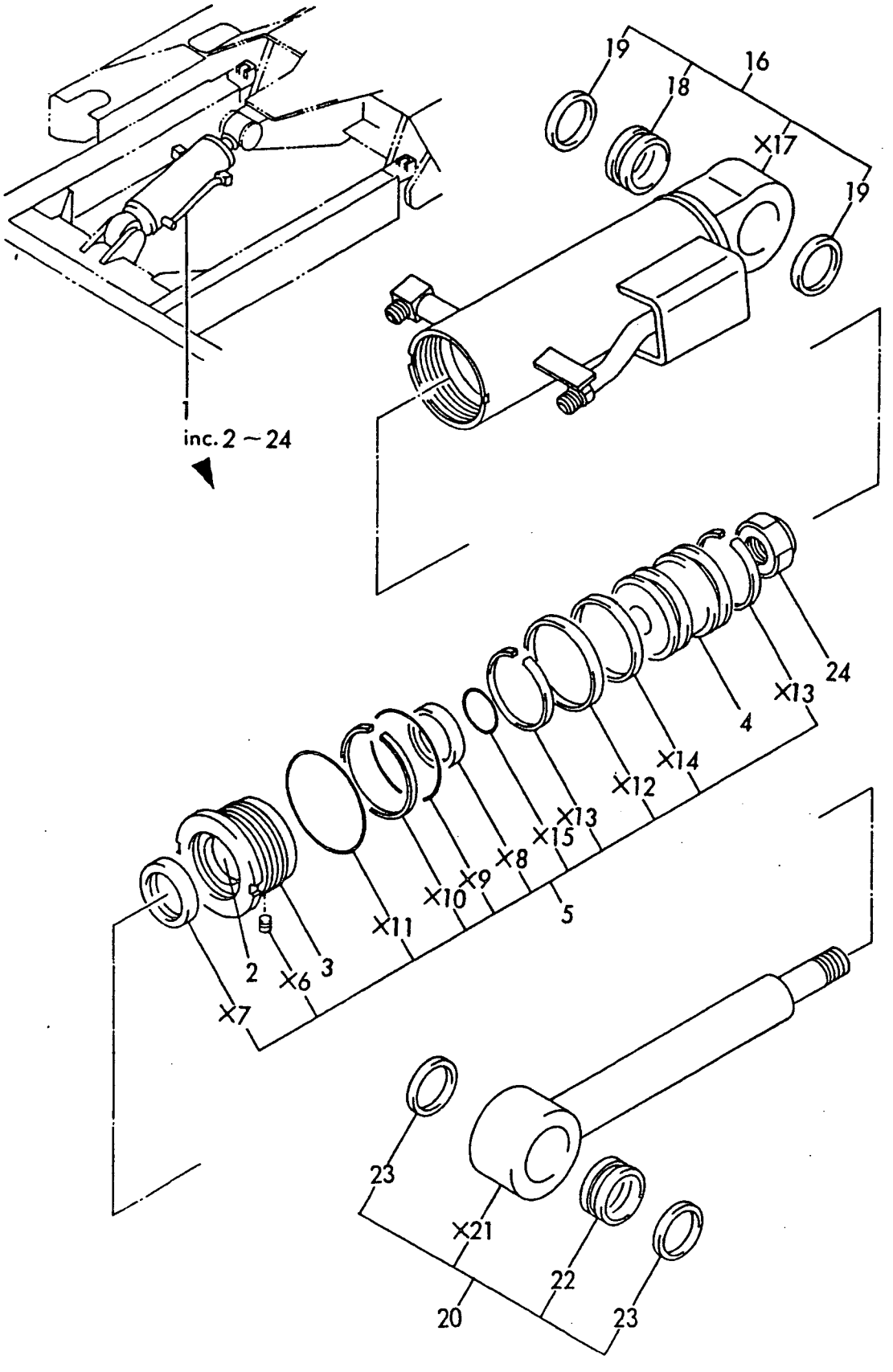

https://truckmanualshub.com/

```
1,1,,172180-73300,,"MOTOR, TRAVEL",2,2,,,,,1,,,,,,,,,,
2,1,,26013-100252,,"BOLT W/WASHER M10X25",16,16,,,,,,,,,,,,,,,,
```

Fig. 31 ソウコウモータ TRAVEL MOTOR

https://truckmanualshub.com/

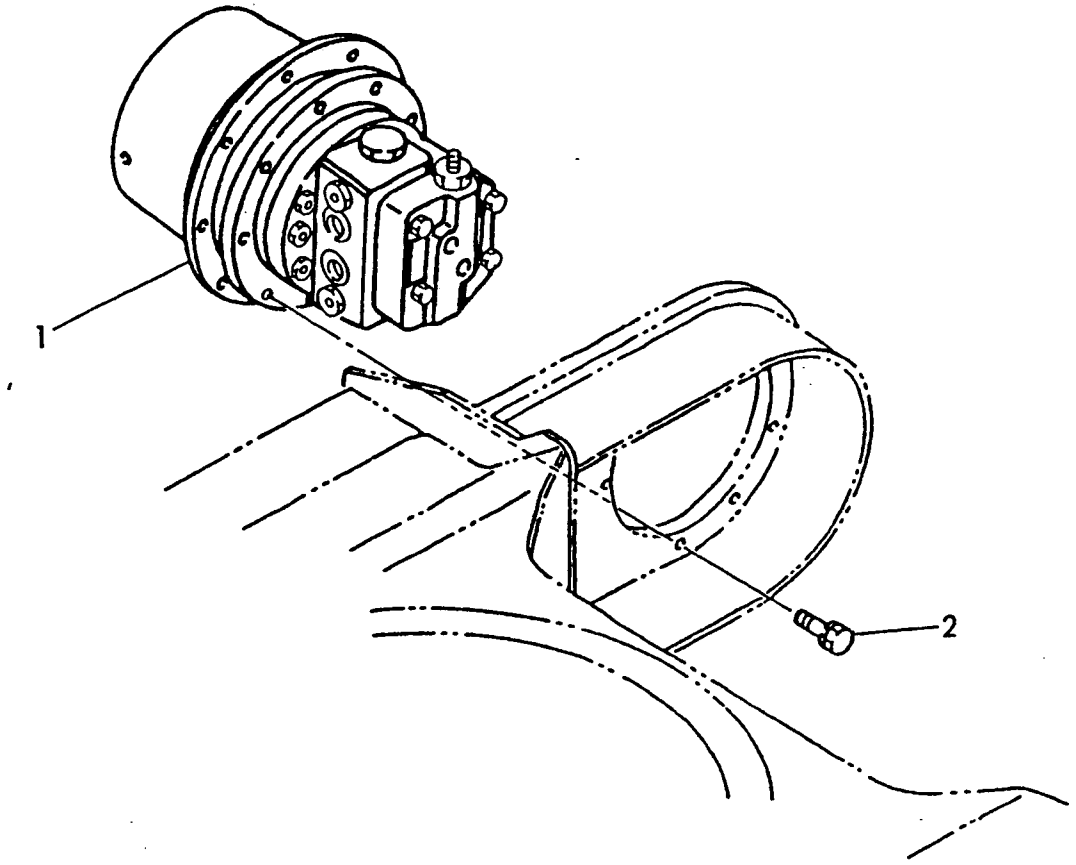

https://truckmanualshub.com/

```
1,1,,172180-73310,,"MOTOR,
SWING",1,1,,,,,1,72180054,*1996.08,72180054,*1996.08,,,,,,,,I
2,2,,172180-73320,,"MOTOR ASSY,",1,1,,,,,,,,,,,,,,,,
3,3,,172180-73330,,"GEAR ASSY, PINION",1,1,,,,,,,,,,,,,,,,
4,4,,172137-70490,,PLUG,1,1,,,,,,,,,,,,,,,,
5,4,,172180-73340,,"BEARING, HOUSING",1,1,,,,,,,,,,,,,,,,
6,4,,172180-73350,,"GEAR, PINION",1,1,,,,,,,,,,,,,,,,
7,4,,172180-73370,,"BALL BEARING",1,1,,,,,,,,,,,,,,,,
8,4,,172171-73440,,"BALL BEARING",1,1,,,,,,,,,,,,,,,,
9,4,,172171-73460,,"RETAINING RING",1,1,,,,,,,,,,,,,,,,
10,3,,172180-73360,,"MOTOR ASSY",1,1,,,,,,,,,,,,,,,,
11,4,,172137-70490,,PLUG,1,1,,,,,,,,,,,,,,,,
12,4,,172137-70570,,PIN,2,2,,,,,,,,,,,,,,,,
13,4,,172137-70580,,SPRING,2,2,,,,,,,,,,,,,,,,
14,4,,172137-70590,,PLATE,1,1,,,,,,,,,,,,,,,,
15,4,,172137-70600,,VALVE,1,1,,,,,,,,,,,,,,,,
16,4,,172148-73350,,"PLATE, VALVE",1,1,,,,,,,,,,,,,,,,
17,4,,172180-73390,,ROLLER,1,1,,,,,,,,,,,,,,,,
18,4,,172183-73440,,"2K DRIVE",1,1,,,,,,,,,,,,,,,,
19,4,,172171-73480,,PLATE,1,1,,,,,,,,,,,,,,,,
20,4,,172171-73501,,"HOUSING, VALVE",1,1,,,,,,,,,,,,,,,,
21,4,,172142-73511,,BOLT,4,4,,,,,,,,,,,,,,,,
22,4,,172168-73580,,BALL,2,2,,,,,,,,,,,,,,,,
23,4,,172168-73590,,PLAG,2,2,,,,,,,,,,,,,,,,
24,4,,172168-73600,,SPRING,2,2,,,,,,,,,,,,,,,,
25,4,,172141-77260,,"VALVE DRIVE",1,1,,,,,,,,,,,,,,,,
26,3,,172180-73400,,"SEAL KIT",1,1,,,,,,,,,,,,,,,,
27,2,,172180-73440,,,1,1,,,,,,,,,,,,,,,,
28,3,,172180-73450,,"SEAL KIT",1,1,,,,,,,,,,,,,,,,
29,1,,26013-120402,,"BOLT M12X 40",4,4,,,,,,,,,,,,,,,,
```

Fig. 32 旋回モータ TURNING MOTOR

https://truckmanualshub.com/

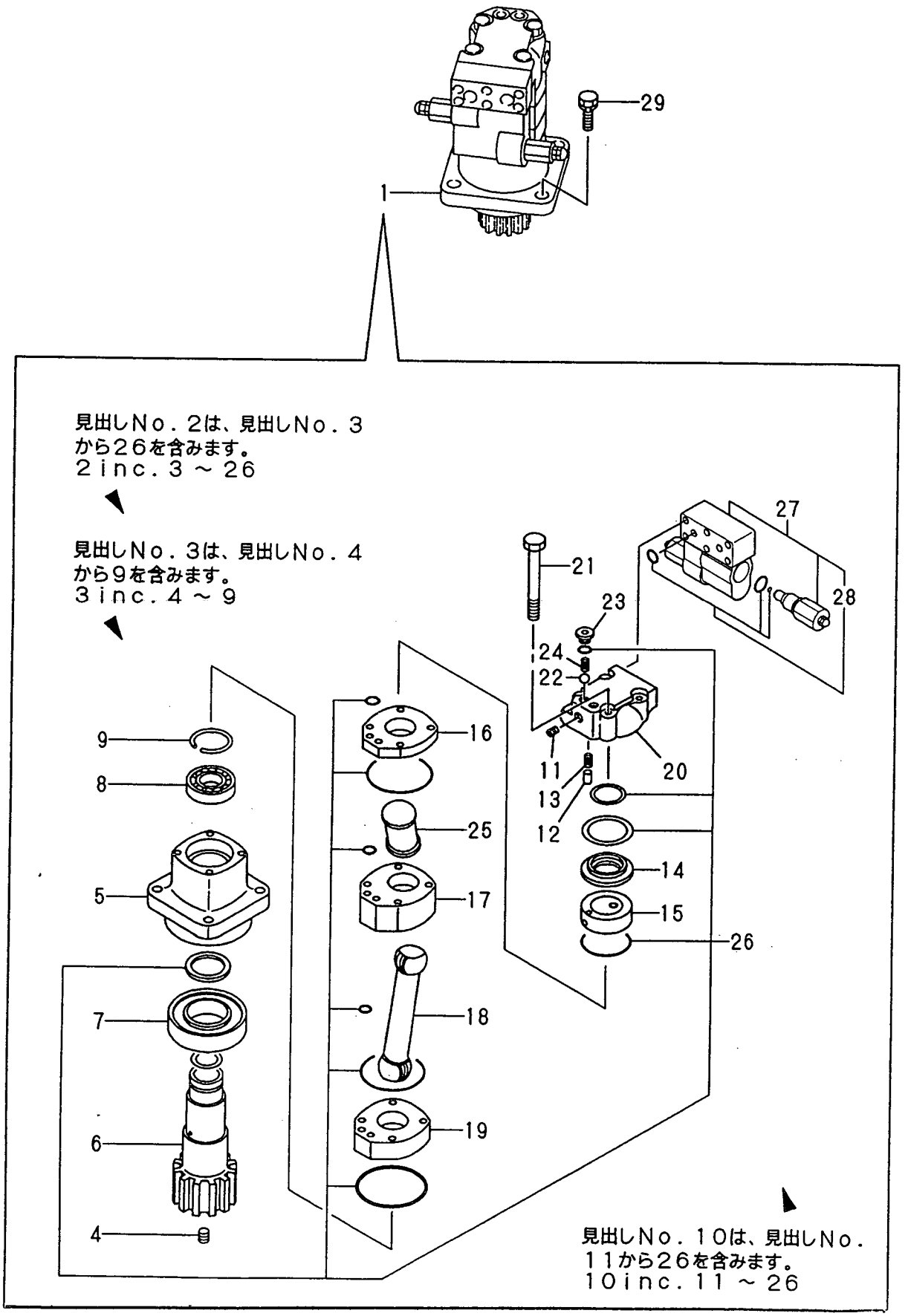

https://truckmanualshub.com/

```
1,1,,172148-73800,,"JOINT, SEIVEL",1,1,,,,,,,,,,,,,,,,,
2,2,,172148-73810,,"SHAFT, SWIVEL",1,1,,,,,,,,,,,,,,,,,
3,2,,172148-73830,,"FLANGE, SWIVEL",1,1,,,,,,,,,,,,,,,,,
4,2,,172148-73840,,"HUB, SWIVEL",1,1,,,,,,,,,,,,,,,,,
5,2,,172137-73860,,"SPACER, SWIVEL",1,1,,,,,,,,,,,,,,,,,
6,2,,172148-73880,,"SEAL KIT, SWIVEL",1,1,,,,,,,,,,,,,,,,,
7,3,,172148-73860,,"SEAL STK",7,7,,,,,,,,,,,,,,,,,
8,3,,172148-73870,,"LING EL, BUCK UP",1,1,,,,,,,,,,,,,,,,,
9,3,,24311-000750,,"O-RING 1A P-75.0",1,1,,,,,,,,,,,,,,,,,
10,3,,172142-73800,,"O-RING 55.76X5.7",1,1,,,,,,,,,,,,,,,,,
11,3,,24321-000700,,"O-RING 1A G-70.0",1,1,,,,,,,,,,,,,,,,,
12,2,,22242-000451,,"CIRCLIP   45",1,1,,,,,,,,,,,,,,,,,
13,2,,23871-020000,,"PLUG PT1/4,SCREW",7,7,,,,,,,,,,,,,,,,,
14,2,,26013-100352,,"BOLT M10X 35",3,3,,,,,,,,,,,,,,,,,
15,1,,26013-100352,,"BOLT M10X 35",4,4,,,,,,,,,,,,,,,,,
```

Fig. 33 スイベルジョイント SWIVEL JOINT

https://truckmanualshub.com/

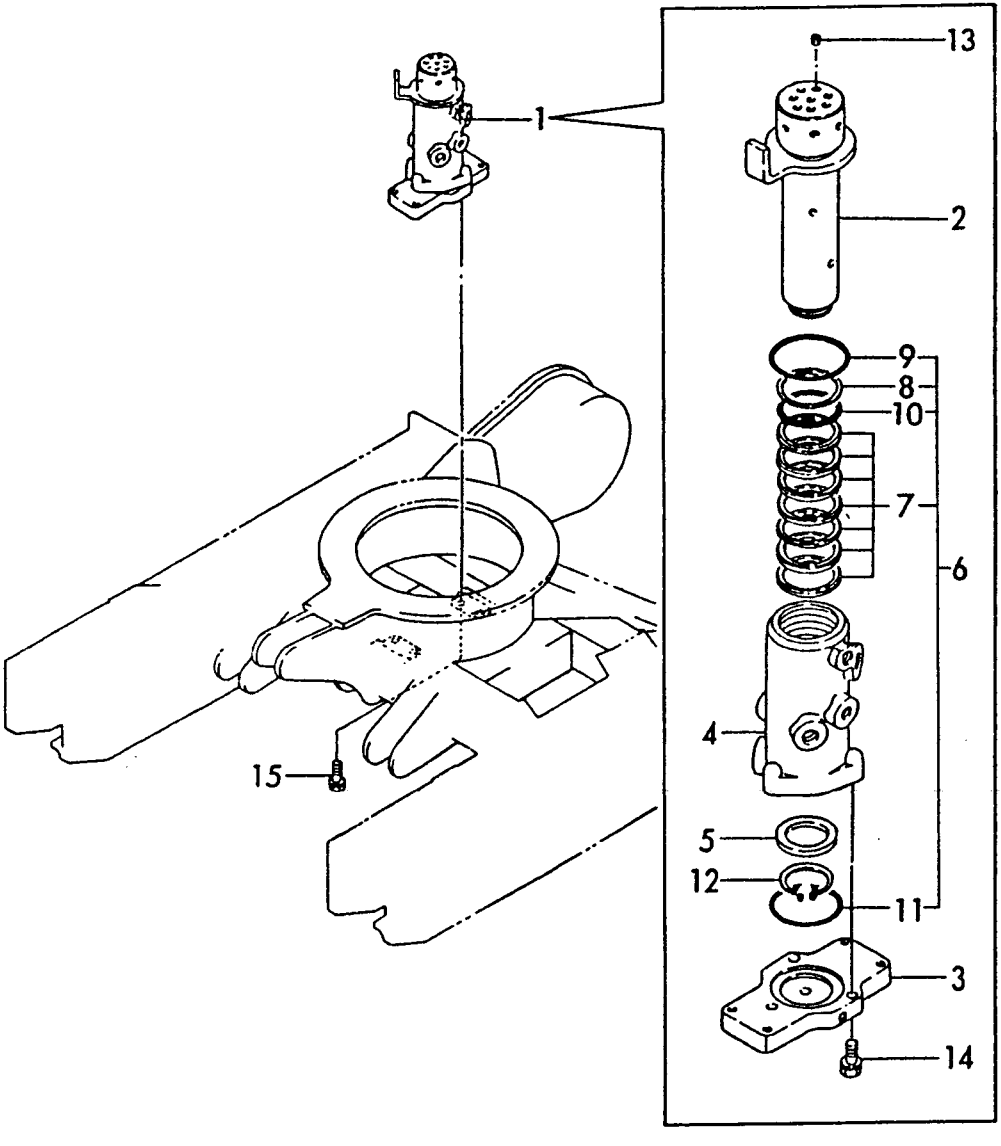

https://truckmanualshub.com/

```
1,1,,172179-45400,,"PLATE ASSY,LINK",1,1,,,,,,,,,,,,,,,,
2,1,,172165-45490,,CUSHION,4,4,,,,,,,,,,,,,,,,
3,1,,22252-000280,,"CIRCLIP   28",4,4,,,,,,,,,,,,,,,,
4,1,,26106-100352,,"BOLT M10X 35 PLATED",4,4,,,,,,,,,,,,,,,,
5,1,,26013-080162,,"BOLT W/WASHER M8X16",3,3,,,,,,,,,,,,,,,,
6,1,,172180-74100,,"VALVE ASSY,CONTROL",1,1,,,,,,1,,,,,,,,,,
7,2,,172179-74140,,"SPOOL SECTION",1,1,,,,,,2,,,,,,,,,,,,,I
8,2,,172180-74120,,"VALVE SECTION (ARM)",1,1,,,,,,3,,,,,,,,,,,,,I
9,2,,172180-74130,,"SPOOL SECTION(TURNIN",1,1,,,,,,5,,,,,,,,,,,,,I
10,2,,172180-74140,,"SPOOL SECTION(BLADE)",1,1,,,,,,5,,,,,,,,,,,,,I
11,2,,172179-74150,,"SERVICE SECTION",1,1,,,,,,2,,,,,,,,,,,,,I
12,2,,172183-74170,,"SECTION COMP.,SWING",1,1,,,,,,3,,,,,,,,,,,,,I
13,2,,172179-74160,,"VALVE SECTION(BUCKET",1,1,,,,,,4,,,,,,,,,,,,,I
14,2,,172180-74180,,"VALVE SECTION(BOOM)",1,1,,,,,,4,,,,,,,,,,,,,I
15,2,,172183-74210,,"VALVE COMP.,RELIEF",2,2,,,,,,,,,,,,,,,,
16,3,,172183-74530,,O-RING,2,2,,,,,,,,,,,,,,,,
17,2,,172183-74220,,"VALVE COMP.,RELIEF",1,1,,,,,,,,,,,,,,,,
18,3,,172183-74530,,O-RING,2,2,,,,,,,,,,,,,,,,
19,2,,172183-74230,,"VALVE CMP,P/T RELIEF",2,2,,,,,,,,,,,,,,,,
20,3,,172137-74640,,"O-RING 1B S 12.5",2,2,,,,,,,,,,,,,,,,
21,3,,24315-000150,,"O-RING 1B P-15.0",2,2,,,,,,,,,,,,,,,,
22,2,,172137-74631,,"VALVE ASSY, SUCTION",2,2,,,,,,,,,,,,,,,,
23,3,,172137-74640,,"O-RING 1B S 12.5",2,2,,,,,,,,,,,,,,,,
24,3,,24315-000150,,"O-RING 1B P-15.0",2,2,,,,,,,,,,,,,,,,
25,2,,172183-74240,,"PLUG COMPL.",2,2,,,,,,,,,,,,,,,,
26,3,,172137-74640,,"O-RING 1B S 12.5",2,2,,,,,,,,,,,,,,,,
27,3,,24315-000150,,"O-RING 1B P-15.0",2,2,,,,,,,,,,,,,,,,
28,2,,172183-74250,,"VALVE COMP.,COMBINAT",1,1,,,,,,,,,,,,,,,,
29,3,,172137-74640,,"O-RING 1B S 12.5",1,1,,,,,,,,,,,,,,,,
30,3,,24315-000150,,"O-RING 1B P-15.0",1,1,,,,,,,,,,,,,,,,
31,2,,172183-74260,,"ADAPTER PF3/8",3,3,,,,,,,,,,,,,,,,
32,2,,24315-000140,,"O-RING 1B P-14.0",3,3,,,,,,,,,,,,,,,,
33,2,,24315-000090,,"O-RING 1B P- 9.0",3,3,,,,,,,,,,,,,,,,
34,2,,172183-74280,,"ROD,TIE",3,3,,,,,,,,,,,,,,,,
35,2,,26716-080002,,"NUT M 8",6,6,,,,,,,,,,,,,,,,
36,2,,172179-74190,,"SECTION CMP,TRAVEL(R",1,1,,,,,,2,,,,,,,,,,,,,I
```

Fig. 34 コントロールバルブ CONTROL VALVE

https://truckmanualshub.com/

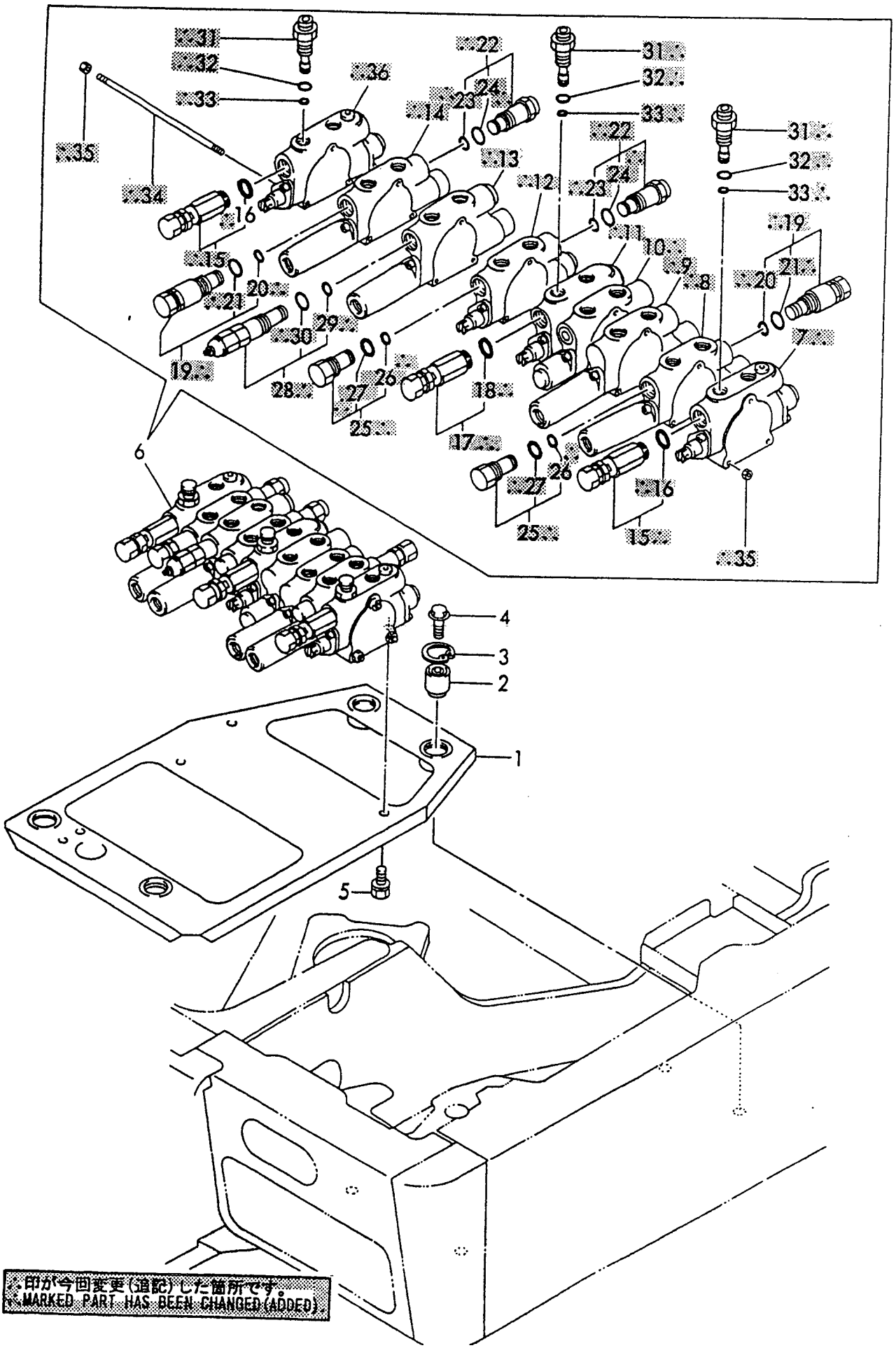

https://truckmanualshub.com/

```
1,1,,172165-74300,,"JOY-STICK L.H.",1,1,,,,,,,,,,,,,,,,
3,2,,172151-73350,,"PLATE, PORT",1,1,,,,,,,,,,,,,,,,
4,2,,172151-73370,,BUSH,1,1,,,,,,,,,,,,,,,,
5,2,,172151-73380,,PLATE,1,1,,,,,,,,,,,,,,,,
7,2,,172151-73400,,PLUG,4,4,,,,,,,,,,,,,,,,
8,2,,172165-74320,,ROD,4,4,,,,,,,,,,,,,,,,
9,2,,172151-73430,,WASHER,8,8,,,,,,,,,,,,,,,,
10,2,,172151-73440,,RETAINER,4,4,,,,,,,,,,,,,,,,
11,2,,172151-73450,,WASHER,4,4,,,,,,,,,,,,,,,,
12,2,,172151-73460,,SPRING,4,4,,,,,,,,,,,,,,,,
13,2,,172165-74330,,SPRING,4,4,,,,,,,,,,,,,,,,
14,2,,172151-73480,,JOINT,1,1,,,,,,,,,,,,,,,,
15,2,,172151-73490,,PLATE,1,1,,,,,,,,,,,,,,,,
16,2,,172165-74340,,"HANDLE, SUB",1,1,,,,,,,,,,,,,,,,
19,3,,172151-73530,,"HANDLE, CAP",1,1,,,,,,,,,,,,,,,,
27,2,,172151-73620,,BELLOWS,1,1,,,,,,,,,,,,,,,,
28,2,,172151-73630,,"SEAL KIT, SUB",1,1,,,,,,,,,,,,,,,,
29,3,,172151-73360,,"SEAL WASHER",2,2,,,,,,,,,,,,,,,,
30,3,,172151-73420,,SEAL,4,4,,,,,,,,,,,,,,,,
31,3,,24315-000200,,"O-RING 1B P-20.0",4,4,,,,,,,,,,,,,,,,
32,3,,24341-000900,,"O-RING 1A S-90.0",1,1,,,,,,,,,,,,,,,,
33,2,,172151-73650,,"NUT, ADJUST",1,1,,,,,,,,,,,,,,,,
34,2,,22351-050010,,"SPRING PIN 5X10",1,1,,,,,,,,,,,,,,,,
35,2,,26450-080302,,"BOLT M 8X 30",2,2,,,,,,,,,,,,,,,,
36,2,,26756-140002,,"LOCK NUT M14 PLATED",1,1,,,,,,,,,,,,,,,,
37,1,,26013-060252,,"BOLT M 6X 25",4,4,,,,,,,,,,,,,,,,
```

Fig. 35 リモコンバルブ(ヒダリ) REMOTE CONTROL VALVE(LEFT)

https://muckmanualshub.com/

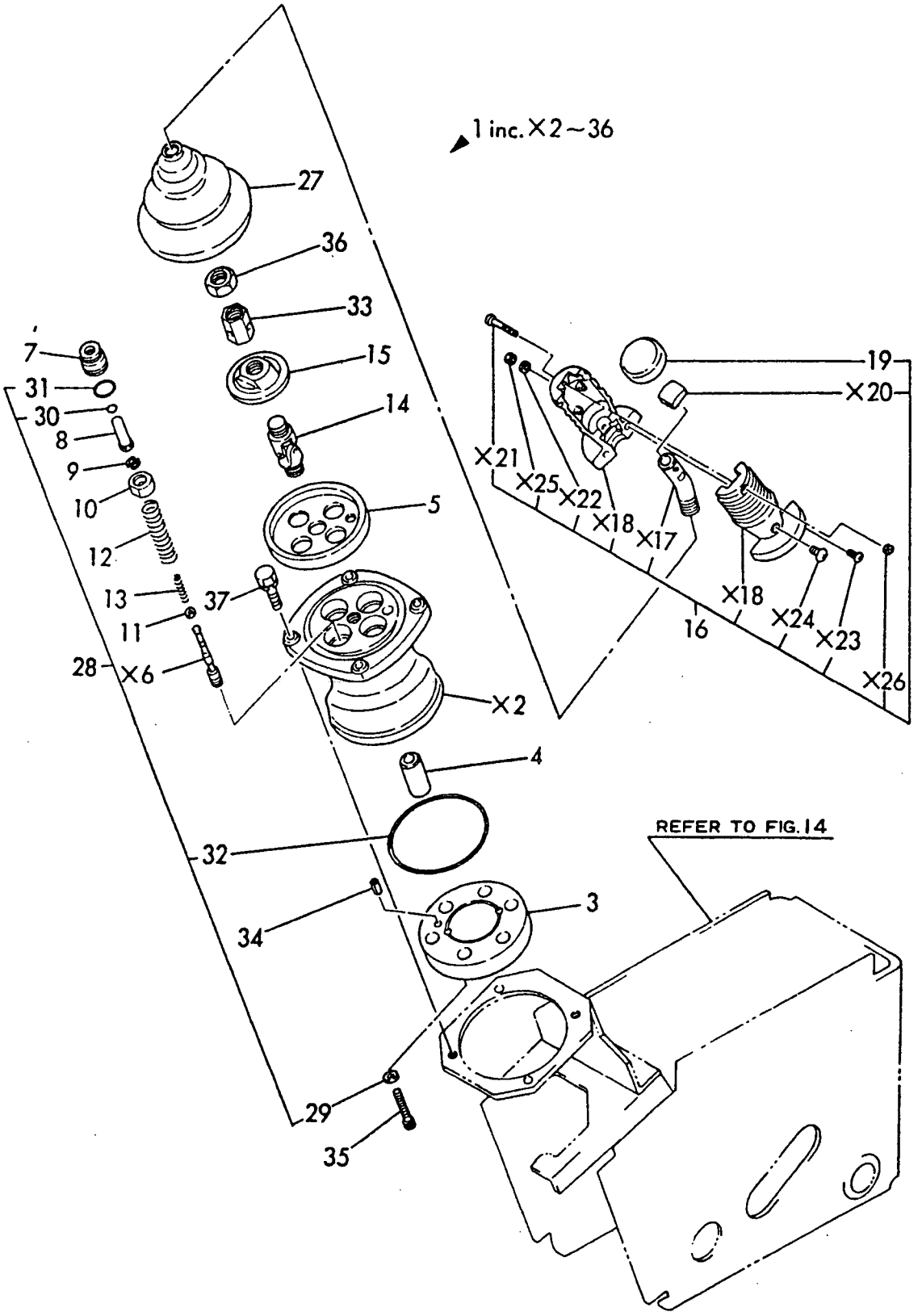

https://truckmanualshub.com/

```
1,1,,172165-74310,,"JOY-STICK R.H.",1,1,,,,,,,,,,,,,,,,
3,2,,172151-73350,,"PLATE, PORT",1,1,,,,,,,,,,,,,,,,
4,2,,172151-73370,,BUSH,1,1,,,,,,,,,,,,,,,,
5,2,,172151-73380,,PLATE,1,1,,,,,,,,,,,,,,,,
7,2,,172151-73400,,PLUG,4,4,,,,,,,,,,,,,,,,
8,2,,172165-74320,,ROD,4,4,,,,,,,,,,,,,,,,
9,2,,172151-73430,,WASHER,8,8,,,,,,,,,,,,,,,,
10,2,,172151-73440,,RETAINER,4,4,,,,,,,,,,,,,,,,
11,2,,172151-73450,,WASHER,4,4,,,,,,,,,,,,,,,,
12,2,,172151-73460,,SPRING,4,4,,,,,,,,,,,,,,,,
13,2,,172165-74330,,SPRING,4,4,,,,,,,,,,,,,,,,
14,2,,172151-73480,,JOINT,1,1,,,,,,,,,,,,,,,,
15,2,,172151-73490,,PLATE,1,1,,,,,,,,,,,,,,,,
16,2,,172151-73500,,"NUT, ADJUST",1,1,,,,,,,,,,,,,,,,
17,2,,172165-74350,,"HANDLE, SUB",1,1,,,,,,,,,,,,,,,,
20,3,,172151-73530,,"HANDLE, CAP",1,1,,,,,,,,,,,,,,,,
33,2,,172151-73590,,BUSH,1,1,,,,,,,,,,,,,,,,
34,2,,172151-73610,,TERMINAL,2,2,,,,,,,,,,,,,,,,
35,2,,172151-73620,,BELLOWS,1,1,,,,,,,,,,,,,,,,
36,2,,172151-73630,,"SEAL KIT, SUB",1,1,,,,,,,,,,,,,,,,
37,3,,172151-73360,,"SEAL WASHER",2,2,,,,,,,,,,,,,,,,
38,3,,172151-73420,,SEAL,4,4,,,,,,,,,,,,,,,,
39,3,,24315-000200,,"O-RING 1B P-20.0",4,4,,,,,,,,,,,,,,,,
40,3,,24341-000900,,"O-RING 1A S-90.0",1,1,,,,,,,,,,,,,,,,
41,2,,22351-050010,,"SPRING PIN 5X10",1,1,,,,,,,,,,,,,,,,
42,2,,26450-080302,,"BOLT M 8X 30",2,2,,,,,,,,,,,,,,,,
43,2,,26756-140002,,"LOCK NUT M14 PLATED",1,1,,,,,,,,,,,,,,,,
44,1,,26013-060252,,"BOLT M 6X 25",4,4,,,,,,,,,,,,,,,,
```

Fig. 36 リモコンバルブ(ミギ) REMOTE CONTROL VALVE (RIGHT)

https://truckmanualshub.com/

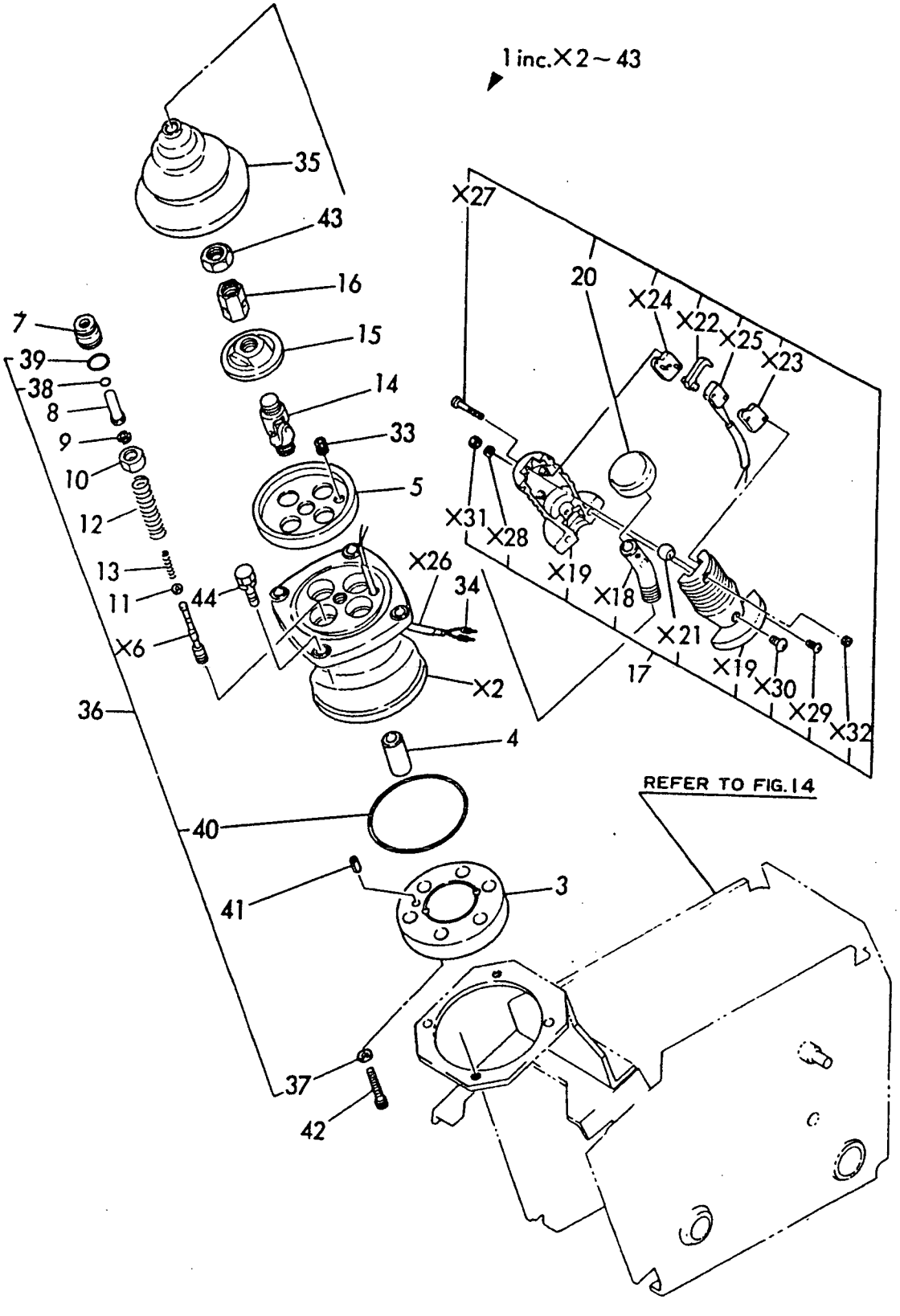

https://truckmanualshub.com/

```
1,1,,172165-74703,,"VALVE ASSY, LOW-HIGH",1,1,,,,,,,,,,,,,,,,,
1-1,1,,172165-74704,,"VALVE ASSY, LOW-
HIGH",1,1,,,,,N,,72165387,M20501,72165387,M20501,,,,,,,
1-2,1,,172165-74705,,"VALVE ASSY LOW-
HIGH",1,1,,,,,S,,72174033,*1995.08,72174033,*1995.08,,,,,,,,,I
2,2,,172151-74420,,"BOLT M 4X 10",3,3,,,,,,,,,,,,,,,,,
3,2,,172165-74710,,SOLENOID,1,1,,,,,,,,,,,,,,,,,
4,2,,172165-74720,,"BOLT M5X16,HEX.SCKT.",2,2,,,,,,,,,,,,,,,,,
5,2,,172165-74730,,"BOLT M5X8,HEX.SCKT.",2,2,,,,,,,,,,,,,,,,,
6,2,,172165-74740,,SPRING,1,1,,,,,,,,,,,,,,,,,
7,2,,172165-74760,,SPRING,1,1,,,,,,,,,,,,,,,,,
8,2,,172165-74770,,PACKING,2,2,,,,,,,,,,,,,,,,,
9,2,,172165-74780,,PLATE,2,2,,,,,,,,,,,,,,,,,
10,2,,172165-74790,,COVER,1,1,,,,,,,,,,,,,,,,,
11,2,,24311-000160,,"O-RING 1A P-16.0",1,1,,,,,,,,,,,,,,,,,
11A,2,,23871-010000,,"PLUG
PT1/8,SCREW",1,1,,,,,W,,72165387,M20501,72165387,M20501,,,,,,,
12,1,,26013-080162,,"BOLT W/WASHER M8X16",2,2,,,,,,,,,,,,,,,,,
```

Fig. 37 ローハイバルブ LOW-HIGH VALVE

https://truckmanualshub.com/

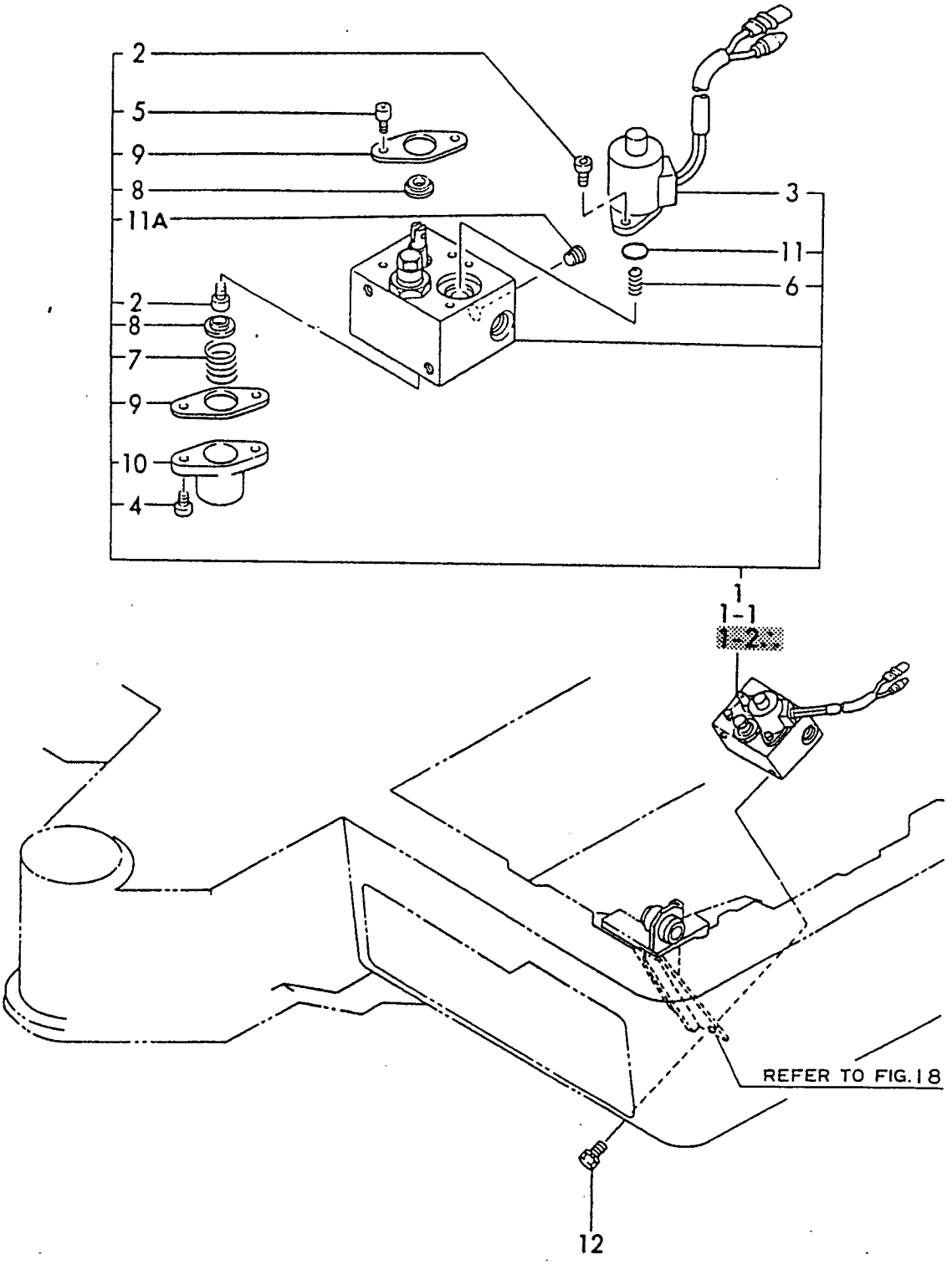

https://truckmanualshub.com/

```
1,1,,772179-75100,,"RESERVER ASSY",1,1,,,,,,,,,,,,,,,,
2,2,,172146-73730,,"FILTER, SUCTION",1,1,,,,,,,,,,,,,,,,
3,2,,124160-01751,,"CAP, LUB.OIL SUPPLY",1,1,,,,,,,,,,,,,,,,,
5,2,,172179-75410,,"TUBE ASSY,SUCTION",1,1,,,,,,,,,,,,,,,,,
6,2,,172179-75440,,COVER,1,1,,,,,,,,,,,,,,,,,
7,2,,172174-75450,,PLATE,1,1,,,,,,,,,,,,,,,,,
8,2,,172165-75460,,GASKET,1,1,,,,,,,,,,,,,,,,,
9,2,,172165-75481,,ELEMENT,1,1,,,,,,,,,,,,,,,,,
10,2,,172179-75510,,"PACKING 124X96",1,1,,,,,,,,,,,,,,,,,
11,2,,172159-75550,,MAGNET,1,1,,,,,,,,,,,,,,,,,
12,2,,172122-75600,,"GAUGE, OIL LEVEL",1,1,,,,,,,,,,,,,,,,,
13,3,,172122-75620,,BOLT,2,2,,,,,,,,,,,,,,,,,
14,3,,172122-75630,,GASKET,4,4,,,,,,,,,,,,,,,,,
15,2,,172159-75720,,"PLUG 24, DRAIN",1,1,,,,,,,,,,,,,,,,,
16,2,,22134-240000,,"WASHER 24",1,1,,,,,,,,,,,,,,,,,
17,2,,22417-200160,,"COTTER PIN 2.0X16",1,1,,,,,,,,,,,,,,,,,
18,2,,24311-000320,,"O-RING 1A P-32.0",1,1,,,,,,,,,,,,,,,,,
19,2,,24321-001050,,"O-RING 1A G-105.0",1,1,,,,,,,,,,,,,,,,,
20,2,,26013-060122,,"BOLT M 6X 12",6,6,,,,,,,,,,,,,,,,,
21,2,,26013-100202,,"BOLT W/WASHER M10X20",4,4,,,,,,,,,,,,,,,,,
22,2,,26022-050102,,"SCREW M 5X 10",3,3,,,,,,,,,,,,,,,,,
23,1,,172179-73700,,"FILTER W/COVER",1,1,,,,,,,,,,,,,,,,,
24,1,,22217-080000,,"SPRING WASHER  8",4,4,,,,,,,,,,,,,,,,,
25,1,,24311-000380,,"O-RING 1A P-38.0",1,1,,,,,,,,,,,,,,,,,
26,1,,26116-080502,,"BOLT M 8X 50 PLATED",4,4,,,,,,,,,,,,,,,,,
27,1,,172174-75490,,HOSE,1,1,,,,,,,,,,,,,,,,,
28,1,,23080-010000,,"CLAMP 10",1,1,,,,,,,,,,,,,,,,,
29,1,,26013-120302,,"BOLT W/WASHER M12X30",2,2,,,,,,,,,,,,,,,,,
30,1,,26013-120302,,"BOLT W/WASHER M12X30",2,2,,,,,,,,,,,,,,,,,
```

Fig. 38 サドウユタンク HYD. OIL TANK

https://truckmanualshub.com/

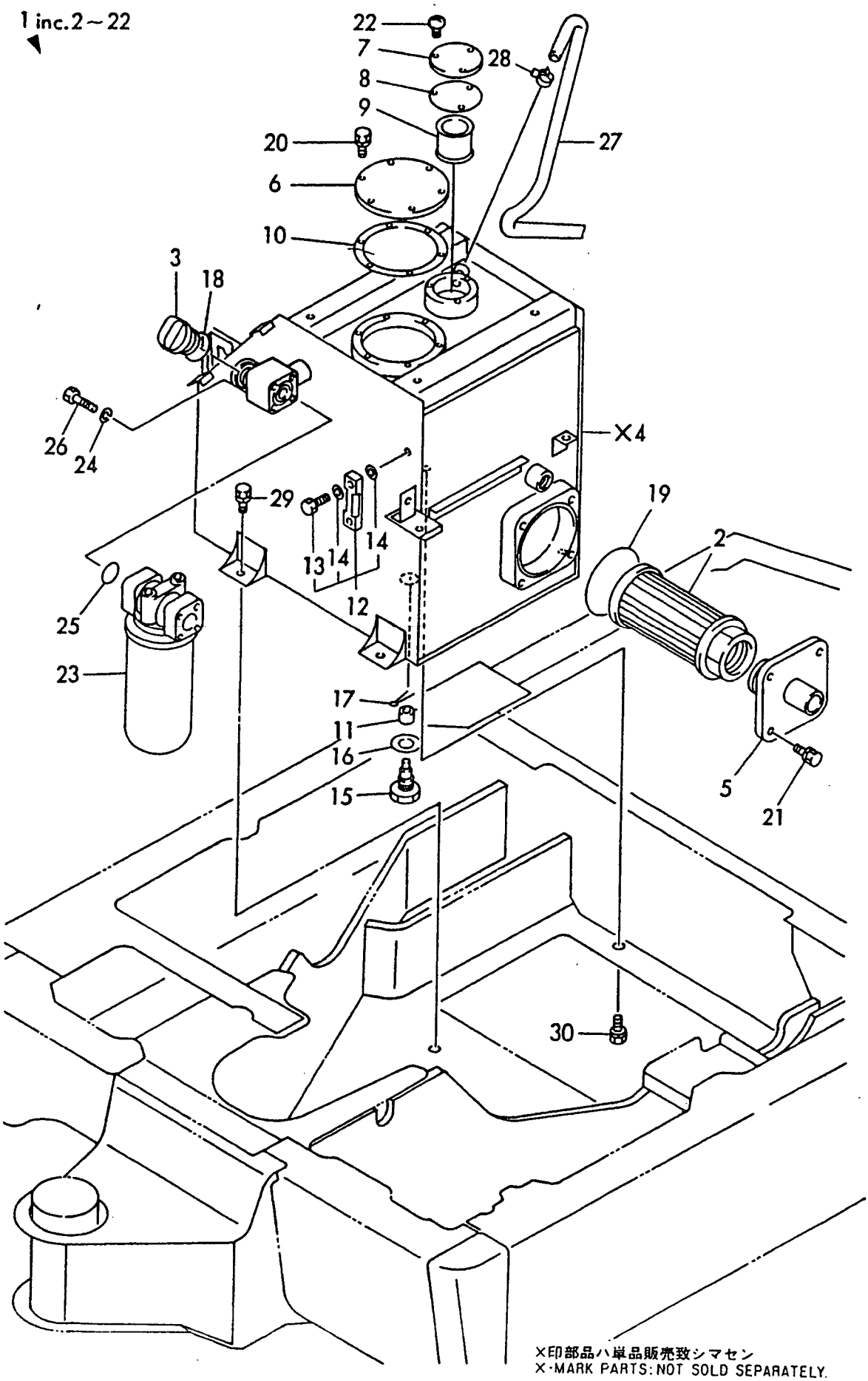

×印部品ハ単品販売致シマセン
×-MARK PARTS: NOT SOLD SEPARATELY.

https://truckmanualshub.com/

```
1,1,,172159-76060,,"CONNECTOR 3/8",2,2,,,,,,,,,,,,,,,
2,2,,24315-000140,,"O-RING 1B P-14.0",2,2,,,,,,,,,,,,,,,,
3,1,,172159-76060,,"CONNECTOR 3/8",1,1,,,,,,,,,,,,,,,,
4,2,,24315-000140,,"O-RING 1B P-14.0",1,1,,,,,,,,,,,,,,,,
5,1,,172179-76100,,"CONNECTOR ASSY,SUCT.",1,1,,,,,,,,,,,,,,,,,
6,1,,172179-76210,,"CONNECTOR3/8-1/2 ASY",1,1,,,,,,,,,,,,,,,,,
7,2,,24315-000180,,"O-RING 1B P-18.0",1,1,,,,,,,,,,,,,,,,
8,1,,172179-76250,,"JOINT PF1/2",1,1,,,,,,,,,,,,,,,,
9,1,,172179-76290,,"CONNECTOR PF3/8",1,1,,,,,,,,,,,,,,,,
10,1,,172159-76320,,ELBOW,3,3,,,,,,,,,,,,,,,,
11,2,,24315-000140,,"O-RING 1B P-14.0",3,3,,,,,,,,,,,,,,,,
12,1,,22217-100000,,"SPRING WASHER 10",4,4,,,,,,,,,,,,,,,,
13,1,,23871-010000,,"PLUG PT1/8,SCREW",3,3,,,,,,,,,,,,,,,,
14,1,,24315-000140,,"O-RING 1B P-14.0",1,1,,,,,,,,,,,,,,,,
15,1,,24315-000180,,"O-RING 1B P-18.0",1,1,,,,,,,,,,,,,,,,
16,1,,24325-000300,,"O-RING 1B G-30.0",1,1,,,,,,,,,,,,,,,,
17,1,,26116-100752,,"BOLT M10X 75 PLATED",4,4,,,,,,,,,,,,,,,,,
18,1,,172179-78100,,"HOSE,SUCTION 31.8",1,1,,,,,,,,,,,,,,,,
19,1,,172179-78110,,"HOSE,SUCTION 15.9",1,1,,,,,,,,,,,,,,,,
20,1,,172179-78150,,"HOSE G206BE085",1,1,,,,,,,,,,,,,,,,
21,1,,172179-78160,,"HOSE G206BE125",1,1,,,,,,,,,,,,,,,,
22,1,,172179-78170,,"HOSE G206BE123",1,1,,,,,,,,,,,,,,,,
23,1,,172179-78480,,"HOSE G806BC042",1,1,,,,,,,,,,,,,,,,
24,1,,23000-025000,,"CLAMP 25",4,4,,,,,,,,,,,,,,,,
25,1,,23000-048000,,"CLAMP 48",4,4,,,,,,,,,,,,,,,,
26,1,,23393-030000,,"JOINT 90RGI 3/8",1,1,,,,,,,,,,,,,,,,
```

Fig. 39 ユアツハイカン（タンクーポンプーバルブ） D7 D7
HYD. OIL PIPING (TANK-PUMP-VALVE)

http://truckmanualshop.com

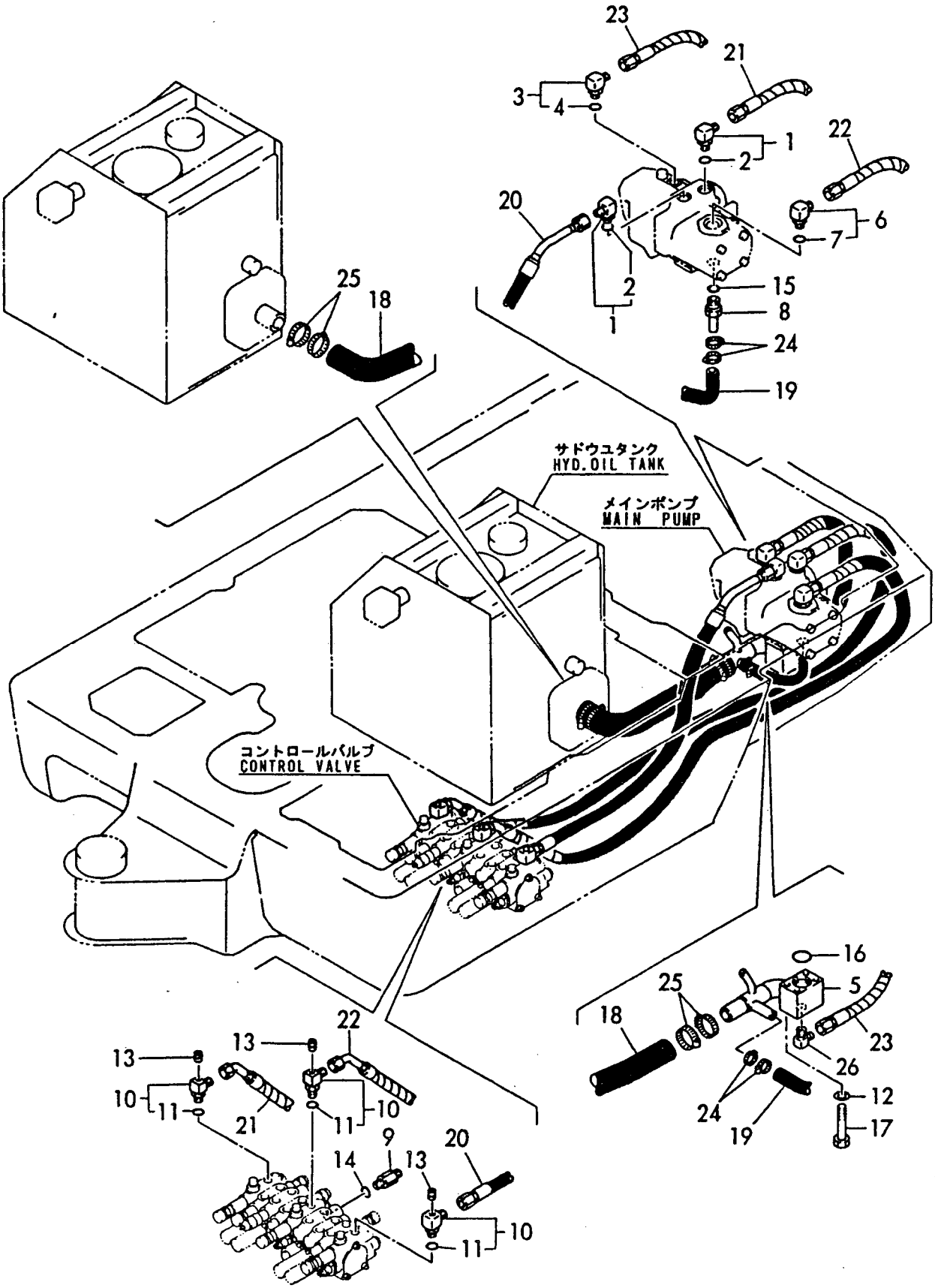

https://truckmanualshub.com/

```
1,1,,172180-76100,,"CONNECTOR PF1/4",4,4,,,,,,,,,,,,,,,,
2,1,,172159-76120,,"CONNECTOR PF1/4",4,4,,,,,,,,,,,,,,,,
3,1,,172161-76160,,"CONNECTOR 3/8-1/4",2,2,,,,,,,,,,,,,,,,,
4,1,,24315-000110,,"O-RING 1B P-11.0",4,4,,,,,,,,,,,,,,,,
5,1,,24315-000110,,"O-RING 1B P-11.0",4,4,,,,,,,,,,,,,,,,
6,1,,24315-000140,,"O-RING 1B P-14.0",2,2,,,,,,,,,,,,,,,,
7,1,,172180-78100,,"HOSE P204BC128",1,1,,,,,,,,,,,,,,,,
8,1,,172180-78110,,"HOSE P204BC125",1,1,,,,,,,,,,,,,,,,
9,1,,172180-78120,,"HOSE P204BC122",1,1,,,,,,,,,,,,,,,,
10,1,,172180-78130,,"HOSE P204BC123",1,1,,,,,,,,,,,,,,,,
11,1,,172180-78140,,"HOSE P204BC130",1,1,,,,,,,,,,,,,,,,
12,1,,172180-78150,,"HOSE P204BC129",1,1,,,,,,,,,,,,,,,,
13,1,,172180-78270,,"HOSE P204CC060",1,1,,,,,,,,,,,,,,,,
14,1,,172180-78280,,"HOSE P204CC054",1,1,,,,,,,,,,,,,,,,
15,1,,172180-78500,,"SUPPORT,HOSE",1,1,,,,,,,,,,,,,,,,
16,1,,26013-100202,,"BOLT W/WASHER M10X20",4,4,,,,,,,,,,,,,,,,,
17,1,,172180-78510,,"CLAMP, 3RD",1,1,,,,,,,,,,,,,,,,
18,1,,172149-78610,,"CLAMP, 3RD HOSE",1,1,,,,,,,,,,,,,,,,
19,1,,172159-78940,,"COVER 16-610",2,2,,,,,,,,,,,,,,,,
20,1,,172159-78970,,"COVER, HOSE",3,3,,,,,,,,,,,,,,,,
21,1,,172159-78980,,"COVER 16-590",1,1,,,,,,,,,,,,,,,,
22,1,,172165-78150,,GROMMET,1,1,,,,,,,,,,,,,,,,
23,1,,172159-78080,,CLAMP,6,6,,,,,,,,,,,,,,,,
24,1,,23000-025000,,"CLAMP 25",6,6,,,,,,,,,,,,,,,,
```

Fig. 40 ユアツハイカン（バルブーモータ，ブーム）
HYD. OIL PIPING (VALVE-MOTOR, BOOM)

https://truckmanualshub.com/

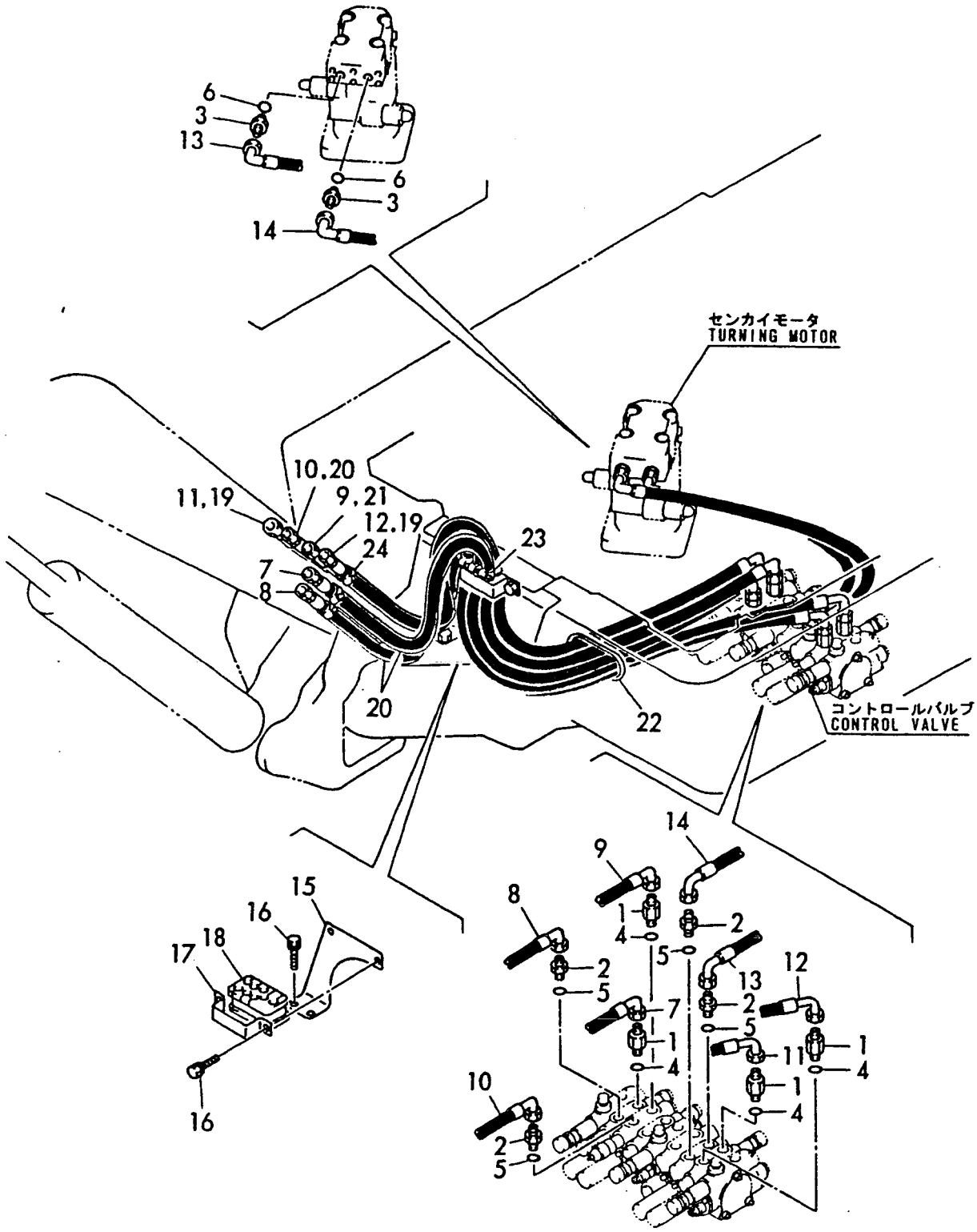

https://truckmanualshub.com/

```
1,1,,172180-76100,,"CONNECTOR PF1/4",1,1,,,,,,,,,,,,,,,,
2,1,,172159-76120,,"CONNECTOR PF1/4",3,3,,,,,,,,,,,,,,,,
3,1,,172159-76120,,"CONNECTOR PF1/4",1,1,,,,,,,,,,,,,,,,
4,1,,172179-76270,,"CONNECTOR PF1/4-3/8",1,1,,,,,,,,,,,,,,,,,,
5,1,,172179-76280,,"CONNECTOR PF1/4-3/8",1,1,,,,,,,,,,,,,,,,,,
6,1,,23393-020000,,"JOINT 90RGI1/4",3,3,,,,,,,,,,,,,,,,
7,1,,23393-020000,,"JOINT 90RGI1/4",2,2,,,,,,,,,,,,,,,,
8,1,,23393-030000,,"JOINT 90RGI 3/8",4,4,,,,,,,,,,,,,,,,
9,1,,24315-000110,,"O-RING 1B P-11.0",1,1,,,,,,,,,,,,,,,,
10,1,,24315-000110,,"O-RING 1B P-11.0",3,3,,,,,,,,,,,,,,,,
11,1,,24315-000110,,"O-RING 1B P-11.0",2,2,,,,,,,,,,,,,,,,
12,1,,24315-000110,,"O-RING 1B P-11.0",1,1,,,,,,,,,,,,,,,,
13,1,,172180-78230,,"HOSE P206BC057",1,1,,,,,,,,,,,,,,,,
14,1,,172180-78240,,"HOSE P206CE075",1,1,,,,,,,,,,,,,,,,
15,1,,172180-78250,,"HOSE P206BC042",1,1,,,,,,,,,,,,,,,,
16,1,,172180-78260,,"HOSE P206CC036",1,1,,,,,,,,,,,,,,,,
17,1,,172180-78290,,"HOSE P204CE183S",1,1,,,,,,,,,,,,,,,,
18,1,,172179-78300,,"HOSE P204BC047",1,1,,,,,,,,,,,,,,,,
19,1,,172180-78300,,"HOSE P204BE225S",1,1,,,,,,,,,,,,,,,,
20,1,,172179-78310,,"HOSE P204CC048",1,1,,,,,,,,,,,,,,,,
21,1,,172179-78400,,"HOSE P204BB060",1,1,,,,,,,,,,,,,,,,
```

Fig. 41 ユアツハイカン（バルブースイベル，スイング）
HYD. OIL PIPING (VALVE-SWIVEL, SWING)

https://truckmanualshub.com/

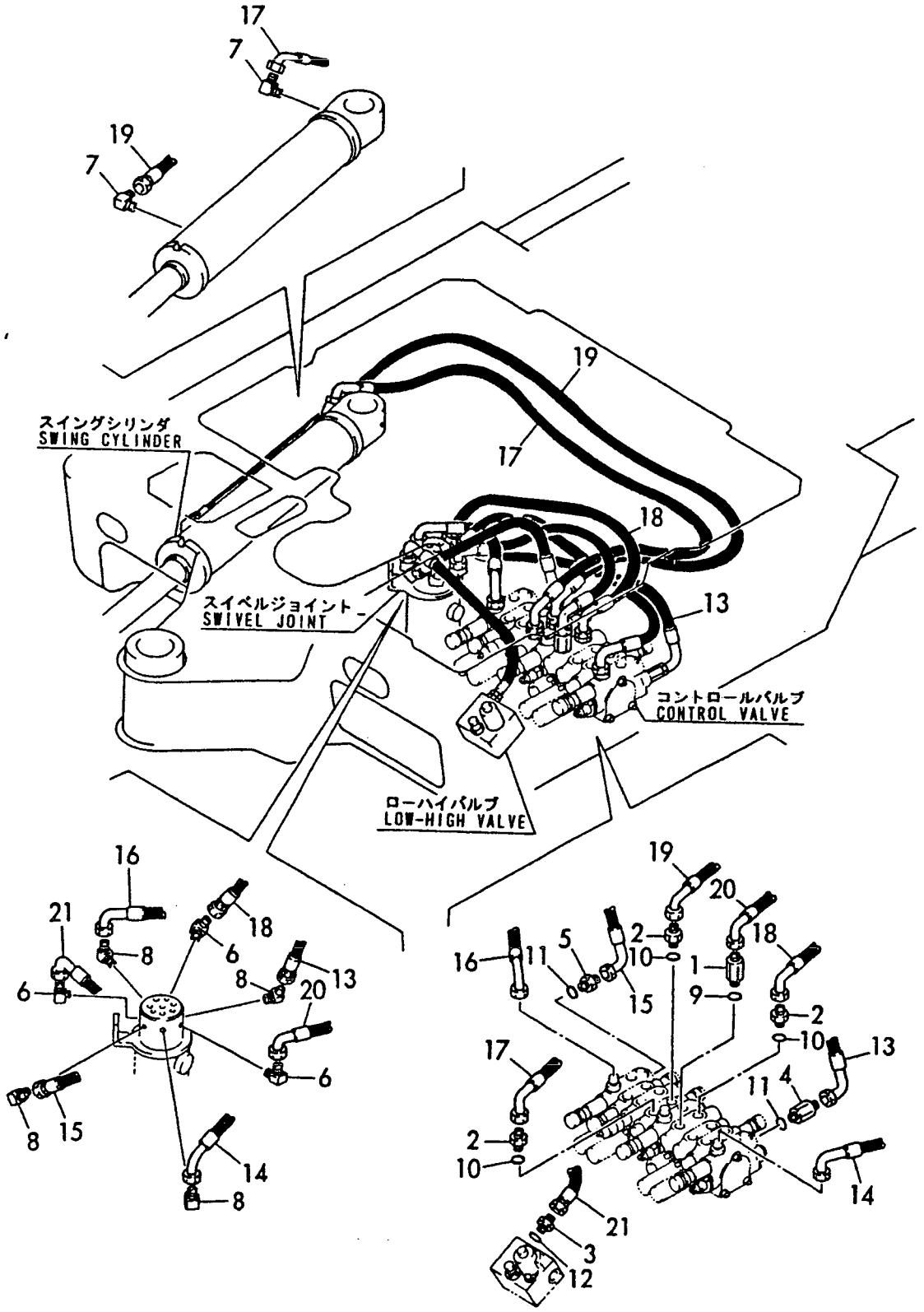

https://truckmanualshub.com/

```
1,1,,172159-76160,,ADAPTOR,1,1,,,,,,,,,,,,,,,,
2,1,,172179-76180,,"CONNECTOR ASY,RETURN",1,1,,,,,,,,,,,,,,,,
3,1,,172179-76300,,"CONNECTOR PF1/2-3/4",1,1,,,,,,,,,,,,,,,,
4,1,,172179-76220,,CONNECTOR,1,1,,,,,,,,,,,,,,,,
5,2,,24315-000140,,"O-RING 1B P-14.0",1,1,,,,,,,,,,,,,,,,
6,1,,22217-080000,,"SPRING WASHER  8",4,4,,,,,,,,,,,,,,,,
7,1,,24315-000140,,"O-RING 1B P-14.0",1,1,,,,,,,,,,,,,,,,
8,1,,24315-000180,,"O-RING 1B P-18.0",1,1,,,,,,,,,,,,,,,,
9,1,,26116-080502,,"BOLT M 8X 50 PLATED",4,4,,,,,,,,,,,,,,,,
10,1,,172179-78470,,"HOSE G612CY042",1,1,,,,,,,,,,,,,,,,
11,1,,172179-78490,,"HOSE G806BC055",1,1,,,,,,,,,,,,,,,,
12,1,,172179-78500,,"HOSE G806CC070S",1,1,,,,,,,,,,,,,,,,
13,1,,23000-035000,,"CLAMP 35",2,2,,,,,,,,,,,,,,,,
14,1,,23393-020000,,"JOINT 90RGI1/4",1,1,,,,,,,,,,,,,,,,
```

Fig. 42 ユアツハイカン（リターン） HYD. OIL PIPING (RETURN)

https://truckmanualshub.com/

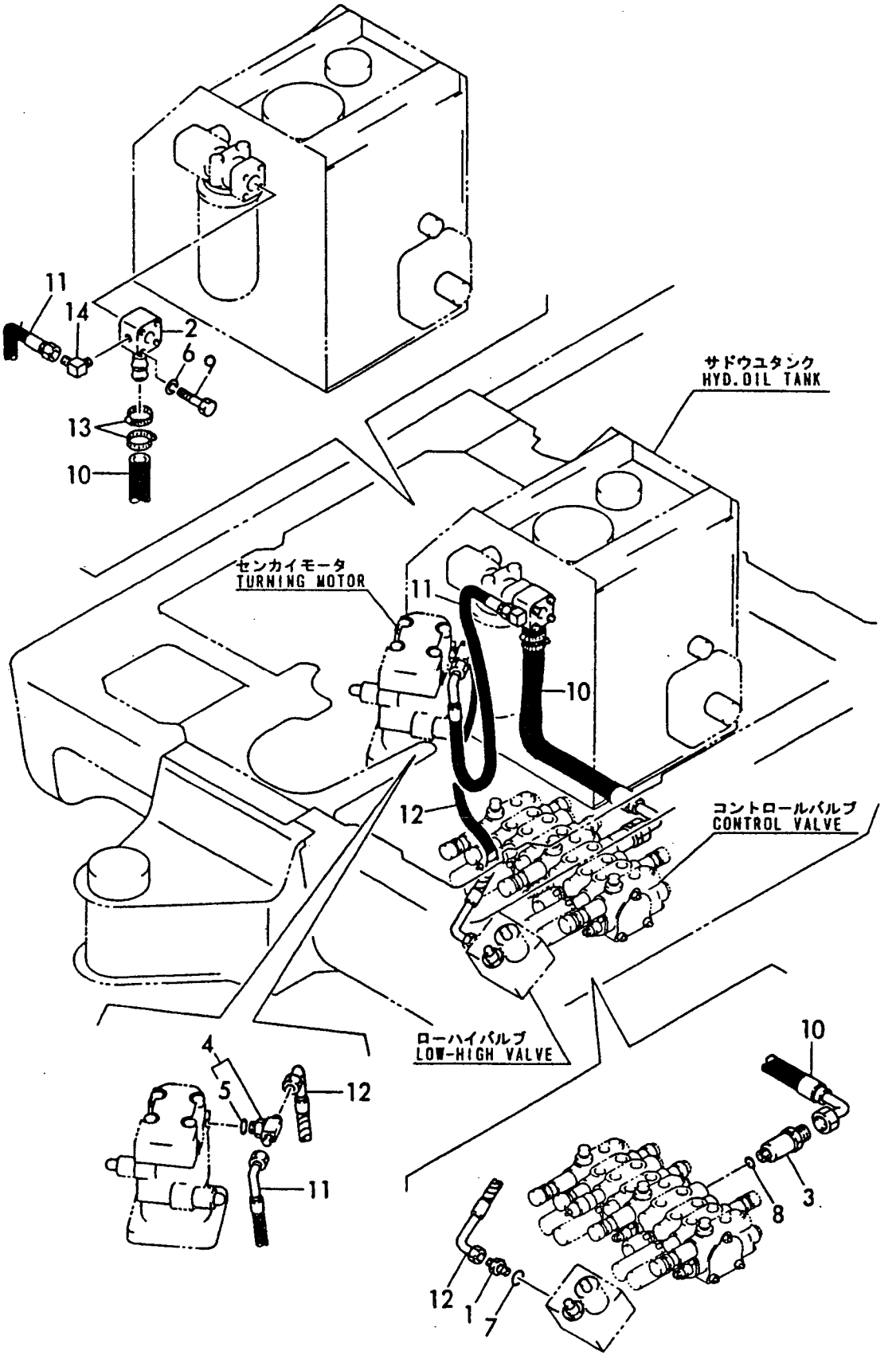

https://truckmanualshub.com/

```
1,1,,172159-76120,,"CONNECTOR PF1/4",2,2,,,,,,,,,,,,,,,,
2,1,,172159-76160,,ADAPTOR,4,4,,,,,,,,,,,,,,,,
3,1,,23391-030000,,"JOINT RGI 3/8",4,4,,,,,,,,,,,,,,,,
4,1,,23393-020000,,"JOINT 90RGI1/4",4,4,,,,,,,,,,,,,,,,
5,1,,23394-020000,,"JOINT 45RGI1/4",2,2,,,,,,,,,,,,,,,,
6,1,,24315-000110,,"O-RING 1B P-11.0",2,2,,,,,,,,,,,,,,,,,
7,1,,24315-000140,,"O-RING 1B P-14.0",4,4,,,,,,,,,,,,,,,,,
8,1,,172180-78180,,"HOSE P204AB022",2,2,,,,,,,,,,,,,,,,
9,1,,172180-78190,,"HOSE P204BB035W",2,2,,,,,,,,,,,,,,,,
10,1,,172180-78200,,"HOSE P206BC065",4,4,,,,,,,,,,,,,,,,
11,1,,172180-78210,,"HOSE G604BB060",2,2,,,,,,,,,,,,,,,,
12,1,,172180-78220,,"HOSE P204BC083",2,2,,,,,,,,,,,,,,,,
13,1,,172174-79820,,"COVER, HOSE",2,2,,,,,,,,,,,,,,,,
```

Fig. 43 ユアツハイカン（ソウコウ） HYD. OIL PIPING (TRAVEL)

https://truckmanualshub.com/

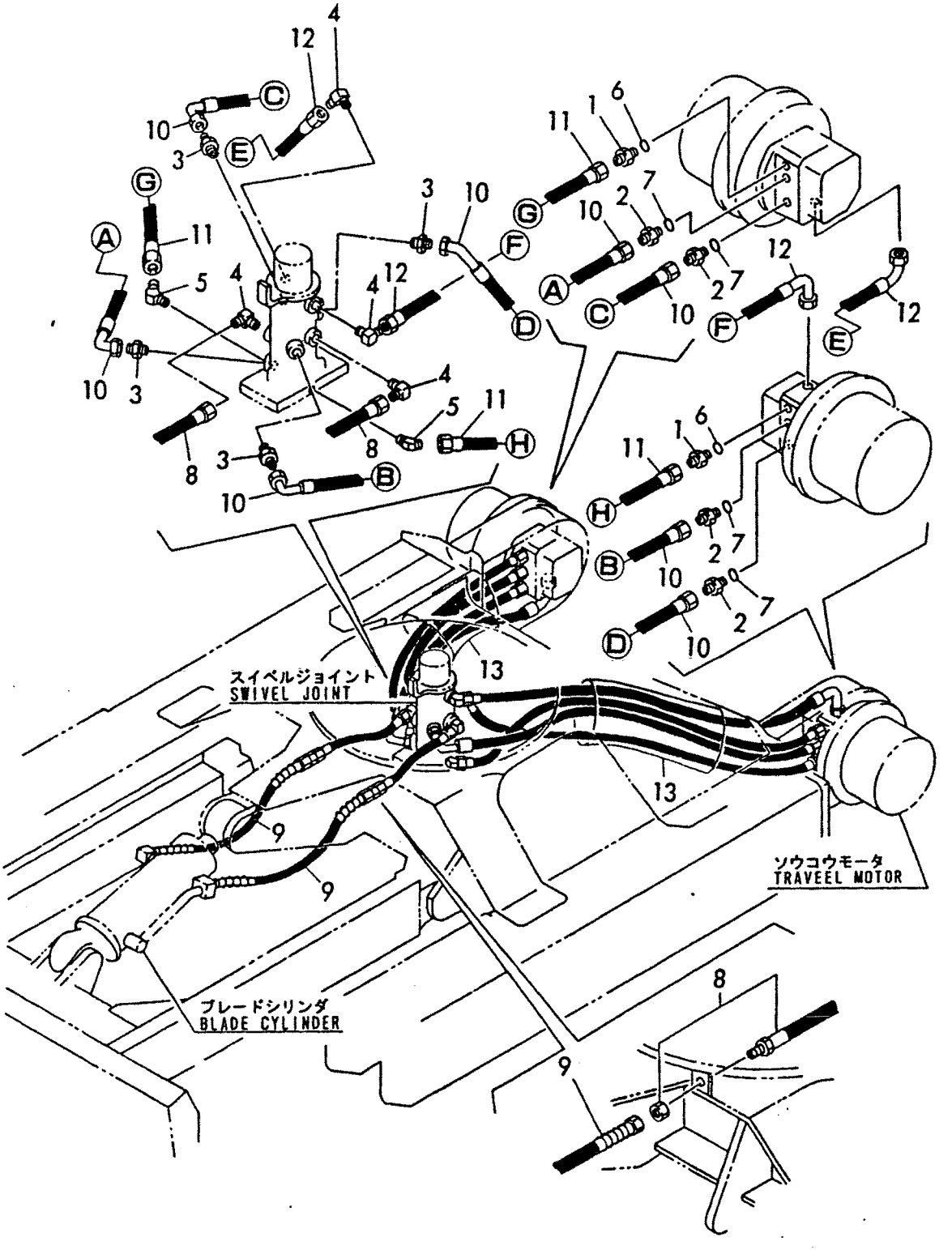

https://truckmanualshub.com/

```
1,1,,172159-76700,,PLATE,4,4,,,,,,,,,,,,,,,,
2,1,,172159-76450,,"TUBE(L),ARM",1,1,,,,,,,,,,,,,,,,
3,1,,172159-76470,,"TUBE(R),ARM",1,1,,,,,,,,,,,,,,,,
4,1,,172159-76490,,"TUBE(L),BUCKET",1,1,,,,,,,,,,,,,,,,
5,1,,172159-76520,,"TUBE(R),BUCKET",1,1,,,,,,,,,,,,,,,,
6,1,,172159-76710,,"COLLER 9X11",4,4,,,,,,,,,,,,,,,,
7,1,,172159-76580,,"JOINT,BOOM",1,1,,,,,,,,,,,,,,,,
8,1,,26013-080162,,"BOLT W/WASHER M8X16",3,3,,,,,,,,,,,,,,,,
9,1,,26013-080252,,"BOLT M 8X 25",4,4,,,,,,,,,,,,,,,,
10,1,,26013-100202,,"BOLT W/WASHER M10X20",2,2,,,,,,,,,,,,,,,,
11,1,,172159-78340,,HOSE,2,2,,,,,,,,,,,,,,,,
12,1,,23271-020501,,HOSE,1,1,,,,,,,,,,,,,,,,
13,1,,23271-020571,,HOSE,1,1,,,,,,,,,,,,,,,,
14,1,,172159-78580,,HOSE,2,2,,,,,,,,,,,,,,,,
15,1,,172159-78960,,"COVER, HOSE",1,1,,,,,,,,,,,,,,,,
16,1,,172159-78800,,"COVER 16-550",1,1,,,,,,,,,,,,,,,,
17,1,,172159-78990,,"COVER 16-320",2,2,,,,,,,,,,,,,,,,
18,1,,23000-025000,,"CLAMP 25",8,8,,,,,,,,,,,,,,,,
```

Fig. 44 ユアツハイカン（ブーム） HYD. OIL PIPING (BOOM)

https://truckmanualshub.com/

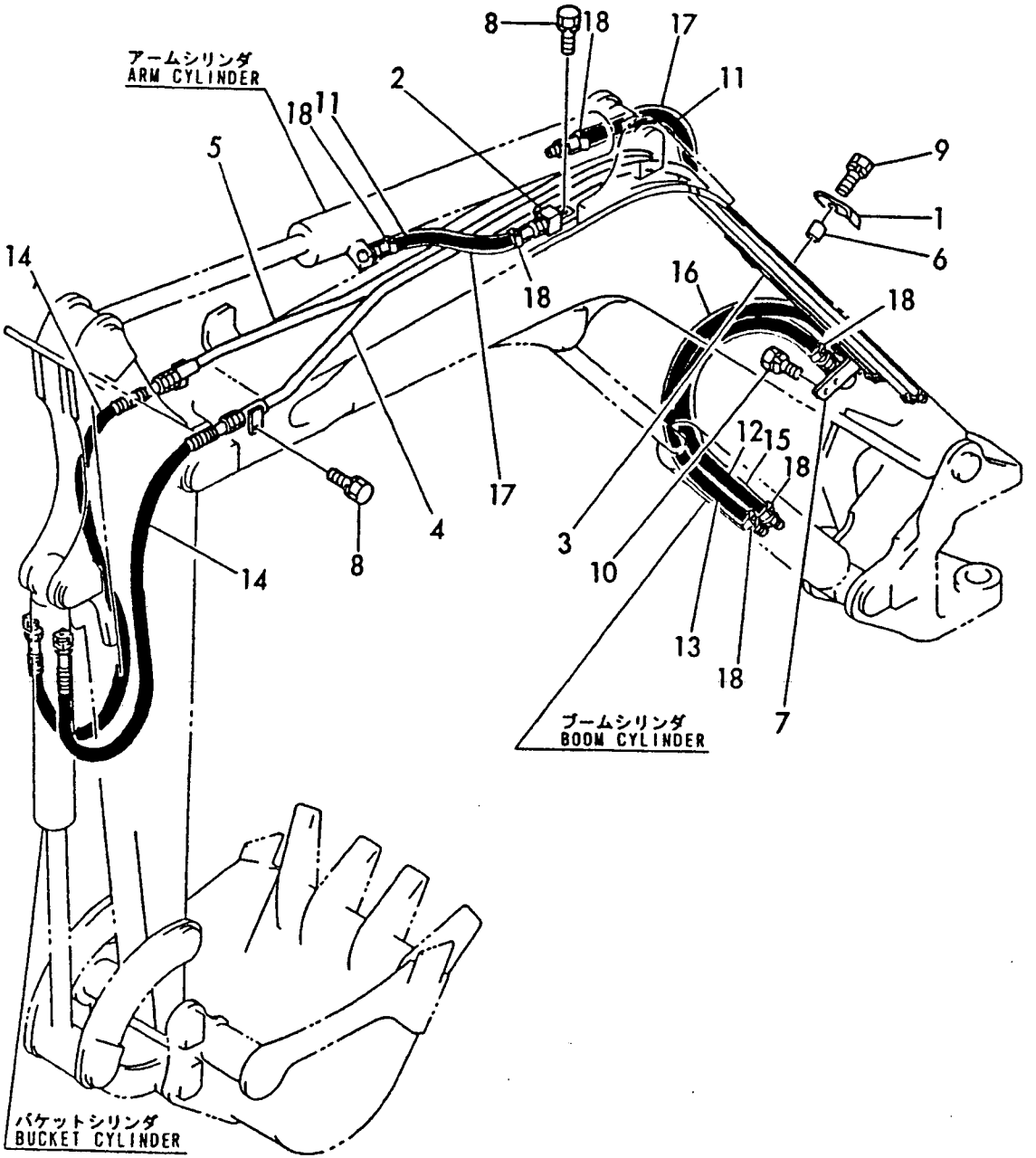

https://truckmanualshub.com/

```
1,1,,23391-030000,,"JOINT RGI 3/8",1,1,,,,,,,,,,,,,,,,,
2,1,,23391-040000,,"JOINT RGI 1/2",1,1,,,,,,,,,,,,,,,,,
3,1,,23393-040000,,"JOINT 90RGI 1/4",1,1,,,,,,,,,,,,,,,,,,
4,1,,172179-76400,,"TUBE P ASSY",1,1,,,,,,,,,,,,,,,,,
5,1,,172179-76430,,"TUBE T ASSY",1,1,,,,,,,,,,,,,,,,,
6,1,,172179-76460,,PLATE,1,1,,,,,,,,,,,,,,,,,
7,1,,172159-76730,,"CLAMP, PIPE",1,1,,,,,,,,,,,,,,,,,
8,1,,26013-100452,,"BOLT M10X 45",1,1,,,,,,,,,,,,,,,,,
9,1,,172180-78170,,"HOSE G208BC325S",1,1,,,,,,,,,,,,,,,,,
10,1,,172179-78320,,"HOSE P206CC079S",1,1,,,,,,,,,,,,,,,,,
11,1,,172179-78460,,"HOSE G608BC075S",1,1,,,,,,,,,,,,,,,,,
12,1,,172138-74351,,"VALVE ASSY",1,1,,,,,,,,,,,,,,,,,
13,2,,172138-74360,,BODY,1,1,,,,,,,,,,,,,,,,,
14,2,,172138-74370,,ROTOR,1,1,,,,,,,,,,,,,,,,,
15,2,,172138-74380,,"SEAL, OIL",2,2,,,,,,,,,,,,,,,,,
16,2,,172138-74390,,SPRING,1,1,,,,,,,,,,,,,,,,,
17,2,,172138-74400,,ROLLER,1,1,,,,,,,,,,,,,,,,,
18,2,,172138-74411,,LEVER,1,1,,,,,,,,,,,,,,,,,
19,2,,172138-74420,,"KNOB, LEVER",1,1,,,,,,,,,,,,,,,,,
20,2,,172138-74470,,"SEAL SET",1,1,,,,,,,,,,,,,,,,,
21,2,,23871-010000,,"PLUG PT1/8,SCREW",1,1,,,,,,,,,,,,,,,,,
22,2,,23871-020000,,"PLUG PT1/4,SCREW",1,1,,,,,,,,,,,,,,,,,
23,1,,172179-74700,,"CONNECTOR ASSY",1,1,,,,,,,,,,,,,,,,,
24,1,,22217-080000,,"SPRING WASHER  8",4,4,,,,,,,,,,,,,,,,,
25,1,,23871-030000,,"PLUG PT3/8,SCREW",1,1,,,,,,,,,,,,,,,,,
26,1,,26013-100202,,"BOLT W/WASHER M10X20",2,2,,,,,,,,,,,,,,,,,,
27,1,,26116-080852,,"BOLT M 8X 85 PLATED",4,4,,,,,,,,,,,,,,,,,
28,1,,172159-76730,,"CLAMP, PIPE",3,3,,,,,,,,,,,,,,,,,
29,1,,172159-76540,,"TUBE, 3RD",1,1,,,,,,,,,,,,,,,,,
30,1,,172159-76560,,"TUBE, 3RD",1,1,,,,,,,,,,,,,,,,,
31,1,,23871-030000,,"PLUG PT3/8,SCREW",1,1,,,,,,,,,,,,,,,,,
32,1,,23871-040000,,"PLUG PT1/2,SCREW",1,1,,,,,,,,,,,,,,,,,
33,1,,26013-100402,,"BOLT M10X 40",3,3,,,,,,,,,,,,,,,,,
34,1,,172180-78160,,"HOSE G206BC157",1,1,,,,,,,,,,,,,,,,,
35,1,,23393-040000,,"JOINT 90RGI 1/4",1,1,,,,,,,,,,,,,,,,,
36,1,,172159-78770,,"COVER, HOSE",1,1,,,,,,,,,,,,,,,,,
37,1,,172159-78950,,"COVER, HOSE",1,1,,,,,,,,,,,,,,,,,
38,1,,23000-025000,,"CLAMP 25",1,1,,,,,,,,,,,,,,,,,
39,1,,23000-035000,,"CLAMP 35",1,1,,,,,,,,,,,,,,,,,
40,1,,172159-78080,,CLAMP,2,2,,,,,,,,,,,,,,,,,
```

Fig. 45 ユアツハイカン（３ＲＤバルブ） HYD. OIL PIPING (3RD VALVE)

https://truckmanuals.blogspot.com/

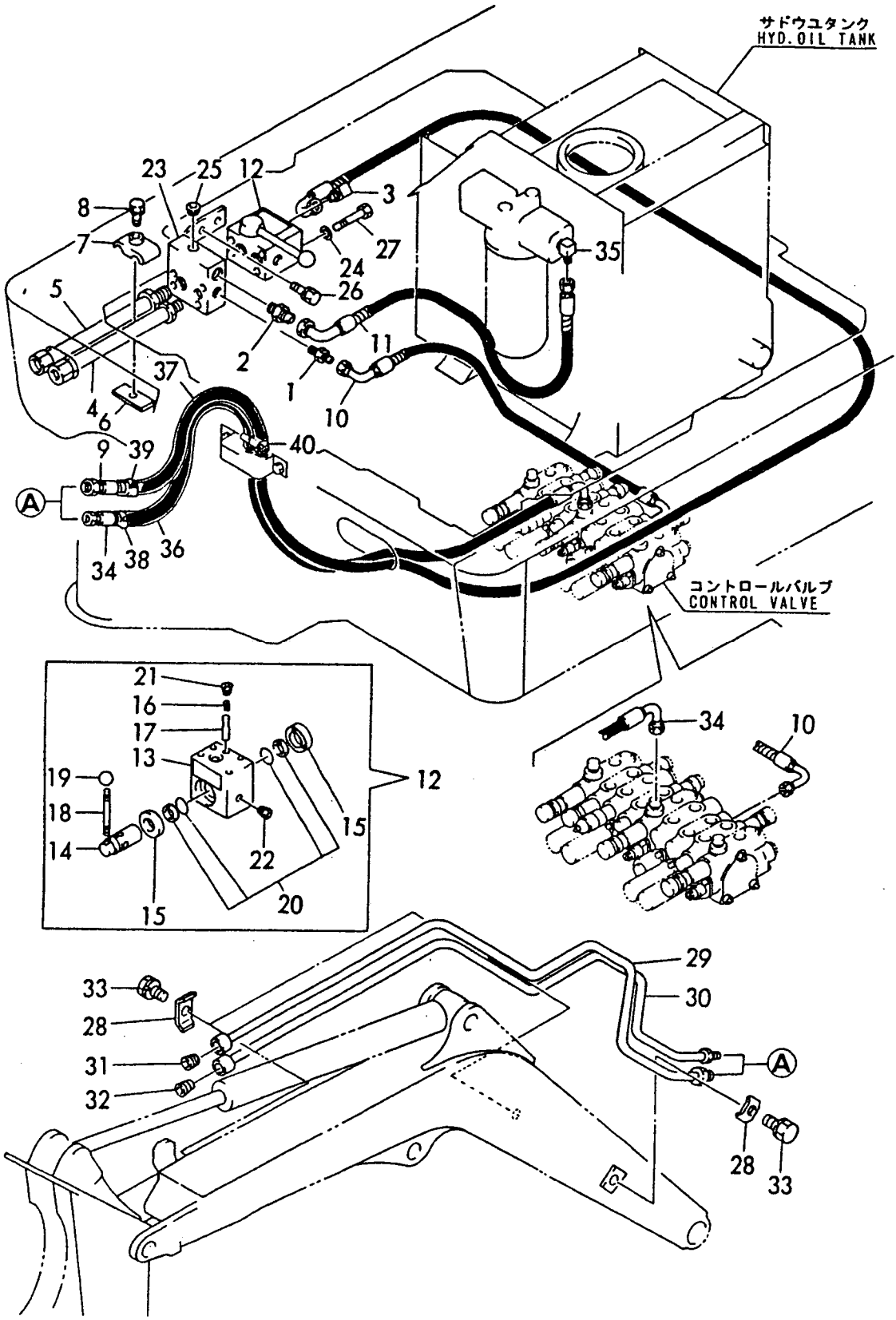

https://truckmanualshub.com/

```
1,1,,172159-76120,,"CONNECTOR PF1/4",12,12,,,,,,,,,,,,,,,,
2,1,,172159-76120,,"CONNECTOR PF1/4",6,6,,,,,,,,,,,,,,,,
3,1,,172180-76160,,"CONNECTOR PF1/4-0.7",2,2,,,,,,,,,,,,,,,,
4,1,,172174-76310,,"CONNECTOR PT3/8PF1/4",1,1,,,,,,,,,,,,,,,,
5,2,,24315-000110,,"O-RING 1B P-11.0",1,1,,,,,,,,,,,,,,,,
6,1,,172165-76560,,ADAPTOR,1,1,,,,,,,,,,,,,,,,
7,1,,172165-76570,,ELBOW,1,1,,,,,,,,,,,,,,,,
8,1,,23393-020000,,"JOINT 90RGI1/4",2,2,,,,,,,,,,,,,,,,
9,1,,24315-000110,,"O-RING 1B P-11.0",12,12,,,,,,,,,,,,,,,,
10,1,,24315-000110,,"O-RING 1B P-11.0",8,8,,,,,,,,,,,,,,,,
11,1,,172159-45160,,"CLAMP 350",4,4,,,,,,,,,,,,,,,,
12,1,,172180-78450,,"COVER,HOSE",2,2,,,,,,,,,,,,,,,,
13,1,,172180-78460,,"COVER FC425-46",1,1,,,,,,,,,,,,,,,,
14,1,,172179-78800,,"HOSE P304BB115",1,1,,,,,,,,,,,,,,,,
15,1,,172179-78810,,"HOSE P304BB118",1,1,,,,,,,,,,,,,,,,
16,1,,172179-78820,,"HOSE P304BC165S",1,1,,,,,,,,,,,,,,,,
17,1,,172179-78830,,"HOSE P304BC165S",1,1,,,,,,,,,,,,,,,,
18,1,,172179-78840,,"HOSE P304BB205S",1,1,,,,,,,,,,,,,,,,
19,1,,172179-78850,,"HOSE P304BB205S",1,1,,,,,,,,,,,,,,,,
20,1,,172179-78860,,"HOSE P304BC225S",1,1,,,,,,,,,,,,,,,,
21,1,,172179-78870,,"HOSE P304BC225S",1,1,,,,,,,,,,,,,,,,
22,1,,172179-78880,,"HOSE G604BB145S",1,1,,,,,,,,,,,,,,,,
23,1,,172179-78890,,"HOSE G604BB220S",1,1,,,,,,,,,,,,,,,,
24,1,,172179-78900,,"HOSE G604BB175S",1,1,,,,,,,,,,,,,,,,
25,1,,172179-78910,,"HOSE G604BB130S",1,1,,,,,,,,,,,,,,,,
26,1,,172174-79820,,"COVER, HOSE",1,1,,,,,,,,,,,,,,,,
```

Fig. 46 コントロールハイカン（ダイレクト） CONTROL PIPING (DIRECT)

https://truckmanualshop.com/

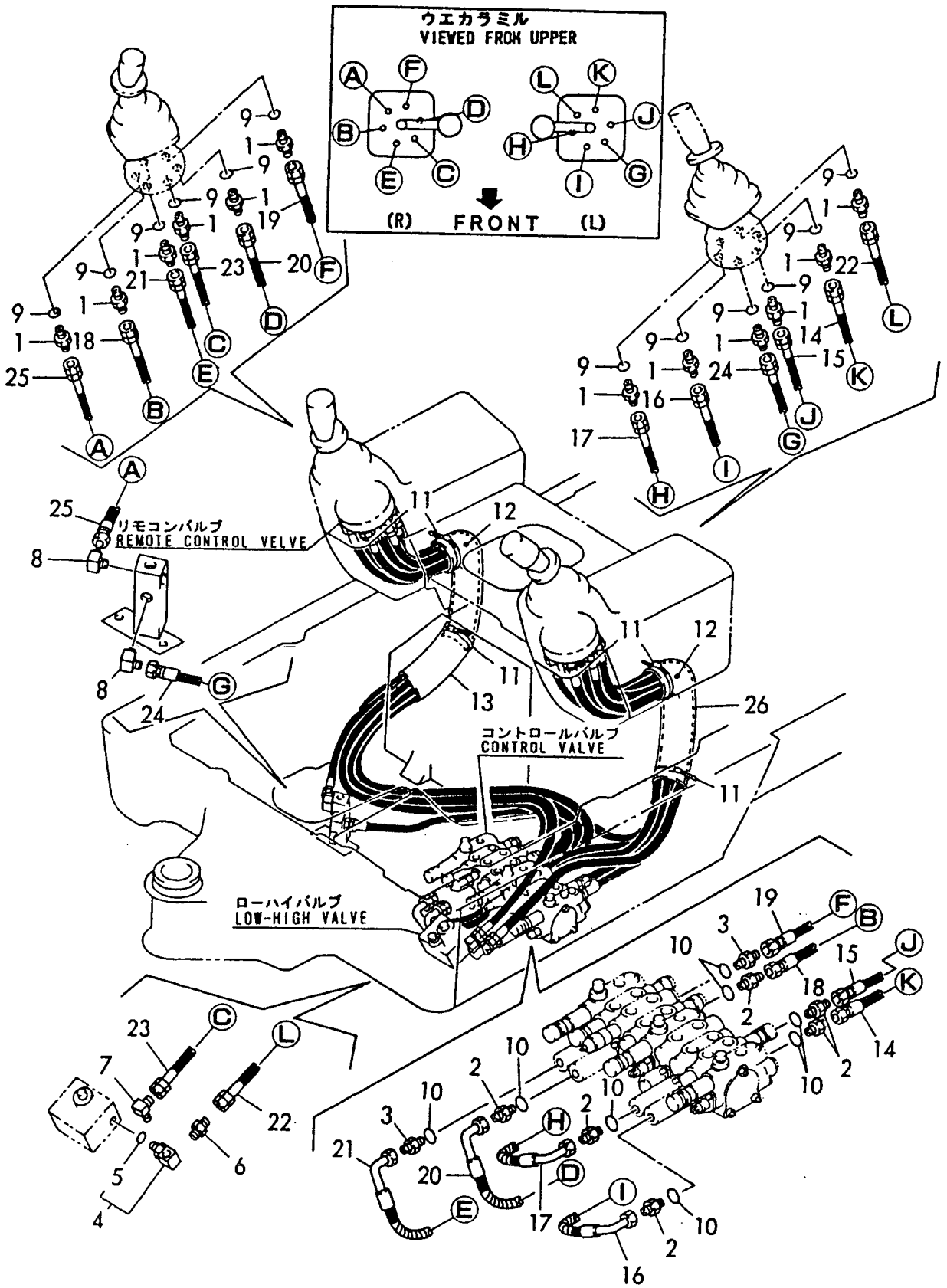

https://truckmanualshub.com/

```
1,1,,172174-76110,,"JOINT COMPL.",1,1,,,,,,,,,,,,,,,,
2,1,,172179-76160,,"FLANGE ASSY",1,1,,,,,,,,,,,,,,,,
3,1,,172174-76170,,"CONNECTOR 3/8-1/4",1,1,,,,,,,,,,,,,,,,,,
4,1,,172159-76180,,CONNECTOR,1,1,,,,,,,,,,,,,,,,
5,2,,24315-000110,,"O-RING 1B P-11.0",1,1,,,,,,,,,,,,,,,,,,
6,1,,172161-76220,,NIPPLE,1,1,,,,,,,,,,,,,,,,
7,1,,172161-76220,,NIPPLE,2,2,,,,,,,,,,,,,,,,
8,1,,172179-76230,,FLANGE,2,2,,,,,,,,,,,,,,,,
9,1,,172174-76270,,"CONNECTOR PT3/8",1,1,,,,,,,,,,,,,,,,,
10,1,,172179-76340,,"CONNECTOR 1/4-3/8",1,1,,,,,,,,,,,,,,,,,,
11,1,,24315-000210,,"O-RING 1B P 21",1,1,,,,,,,,,,,,,,,,,
12,1,,24315-000180,,"O-RING 1B P-18.0",1,1,,,,,,,,,,,,,,,,,,
13,1,,26013-060352,,"BOLT M 6X 35",3,3,,,,,,,,,,,,,,,,,
14,1,,26013-100202,,"BOLT W/WASHER M10X20",2,2,,,,,,,,,,,,,,,,,,
15,1,,26013-060352,,"BOLT M 6X 35",4,4,,,,,,,,,,,,,,,,,
16,1,,172179-78120,,"HOSE G608YY055",1,1,,,,,,,,,,,,,,,,,,
17,1,,172174-78280,,"HOSE G704YY025",1,1,,,,,,,,,,,,,,,,,,
18,1,,172179-78390,,"HOSE P604EE125S",1,1,,,,,,,,,,,,,,,,,,
19,1,,172179-78420,,"HOSE G803BY090",1,1,,,,,,,,,,,,,,,,,,
20,1,,172179-78430,,"HOSE G804EY063",1,1,,,,,,,,,,,,,,,,,,
21,1,,23000-022000,,"CLAMP 22",4,4,,,,,,,,,,,,,,,,,,
22,1,,23010-014000,,"CLAMP 14",4,4,,,,,,,,,,,,,,,,,,
23,1,,23394-030000,,"JOINT 45RGI 3/8",1,1,,,,,,,,,,,,,,,,,,
24,1,,24315-000140,,"O-RING 1B P-14.0",1,1,,,,,,,,,,,,,,,,,,
```

Fig. **47** コントロールハイカン(ポンプ,
CONTROL PIPING(PUMP,
ローハイバルブ, リターン)
LOW-HIGH VALE, RETURN)

https://truckmanualshub.com/

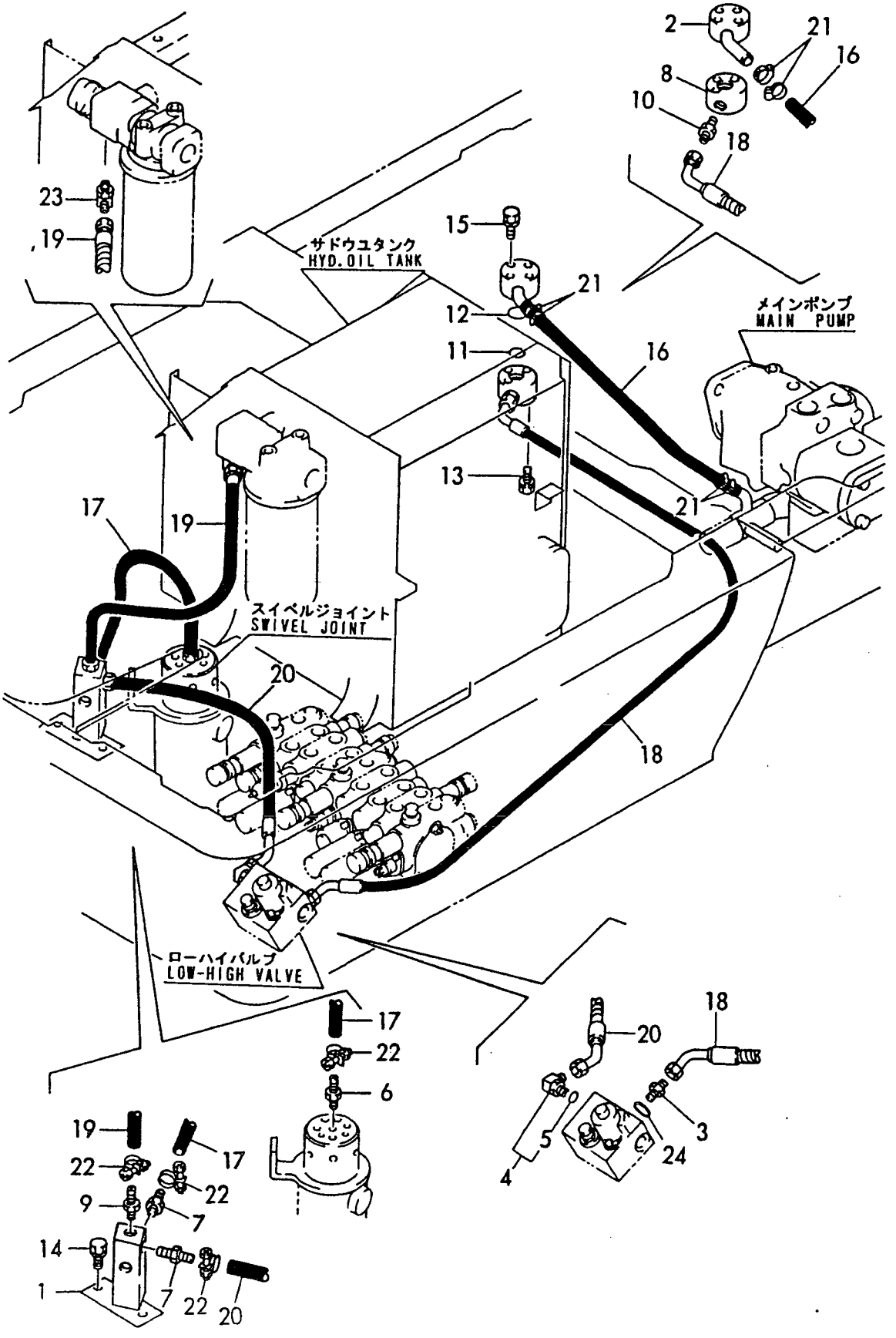

https://truckmanualshub.com/

```
1,1,,172174-77580,,"JOINT 1/8",1,1,,,,,,,,,,,,,,,,
2,1,,172159-77800,,"JOINT, GREASE",4,4,,,,,,,,,,,,,,,,
3,1,,172180-77810,,HOSE,1,1,,,,,,,,,,,,,,,,
4,1,,172159-76140,,"FITTING, GREASE",1,1,,,,,,,,,,,,,,,,
5,1,,172180-77800,,HOSE,1,1,,,,,,,,,,,,,,,,
6,1,,24761-020000,,"NIPPLE PT1/8,GREASE",3,3,,,,,,,,,,,,,,,,
7,1,,172159-76130,,"L-JOINT 1/8",1,1,,,,,,,,,,,,,,,,
8,1,,172180-77820,,HOSE,1,1,,,,,,,,,,,,,,,,
```

Fig. 48 グリーシング GREASING

https://truckmanualshub.com/

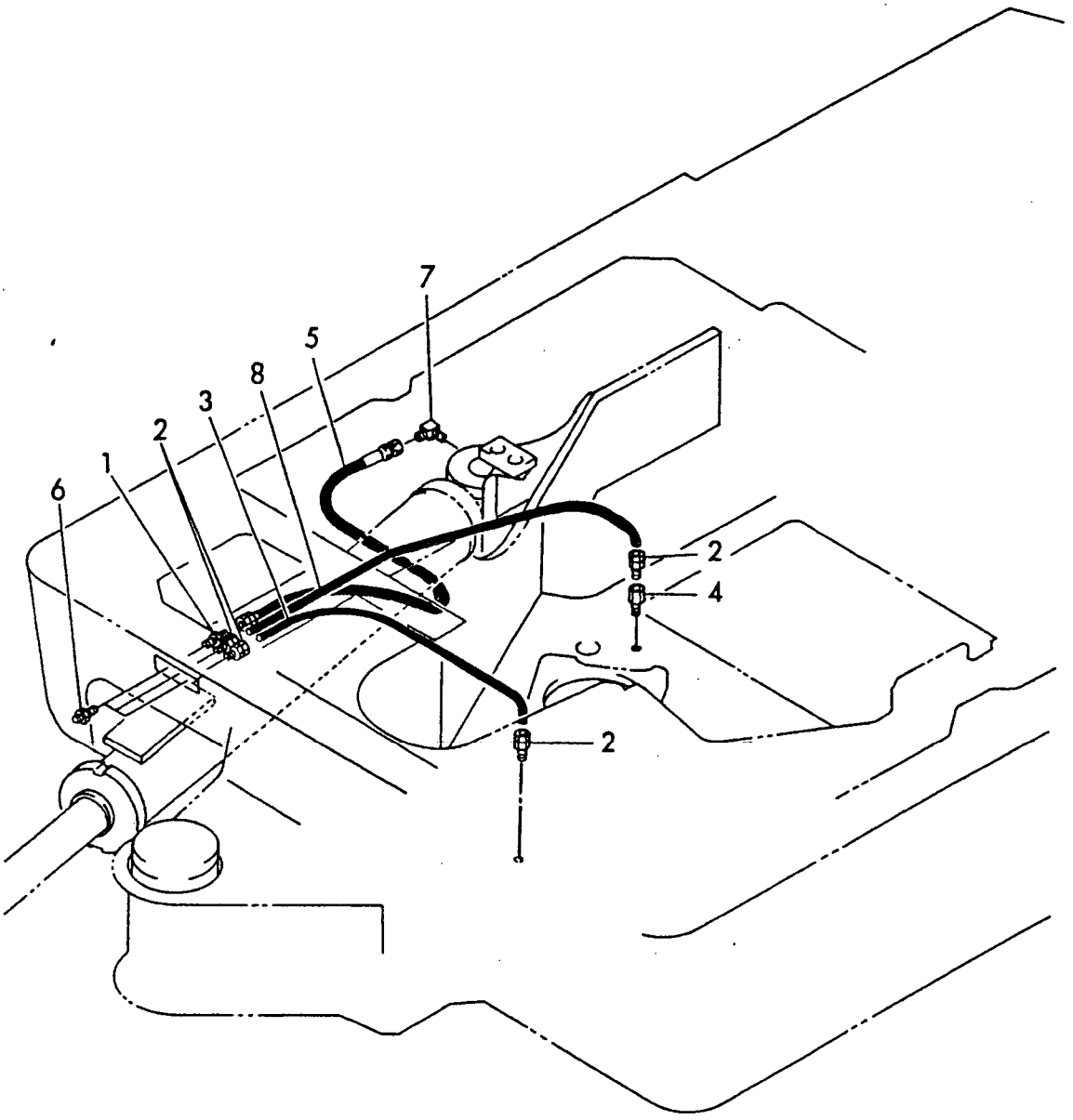

https://truckmanualshub.com/

```
1,1,,172159-81300,,PIN,1,1,,,,,,,,,,,,,,,,
2,1,,172159-81320,,PIN,1,1,,,,,,,,,,,,,,,,
3,1,,172159-81340,,"PIN 30-109, BOOM",1,1,,,,,,,,,,,,,,,,
4,1,,172159-81401,,"BOOM, 3RD",1,1,,,,,,,,,,,,,,,,
5,2,,172159-81480,,"BUSH 38 45, PIN",2,2,,,,,,,,,,,,,,,,
6,2,,172171-81280,,"SEAL 35X45X4",2,2,,,,,,,,,,,,,,,,
7,1,,172159-81500,,"SHIM 35",1,1,,,,,,,,,,,,,,,,
8,1,,22417-800450,,"COTTER PIN 8.0X45",3,3,,,,,,,,,,,,,,,,
9,1,,24761-020000,,"NIPPLE PT1/8,GREASE",2,2,,,,,,,,,,,,,,,,
10,1,,172159-81530,,"SHIM 30, PIN ADJUST",2,2,,,,,,,,,,,,,,,,
11,1,,172180-83100,,"BRACKET, BOOM",1,1,,,,,,,,,,,,,,,,
13,2,,172180-83120,,"BUSH 50X30",2,2,,,,,,,,,,,,,,,,
14,1,,172159-83110,,PIN,1,1,,,,,,,,,,,,,,,,
15,1,,172159-83130,,PIN,1,1,,,,,,,,,,,,,,,,
16,1,,172159-83150,,PIN,1,1,,,,,,,,,,,,,,,,
17,1,,172159-83170,,PIN,1,1,,,,,,,,,,,,,,,,
18,1,,172159-83180,,PIN,1,1,,,,,,,,,,,,,,,,
19,1,,172159-83190,,"PLATE, LOCK",1,1,,,,,,,,,,,,,,,,
20,1,,172159-83210,,"PLATE (C), LOCK",2,2,,,,,,,,,,,,,,,,
21,1,,172159-81500,,"SHIM 35",2,2,,,,,,,,,,,,,,,,
22,1,,22417-800450,,"COTTER PIN 8.0X45",2,2,,,,,,,,,,,,,,,,
23,1,,26013-100202,,"BOLT W/WASHER M10X20",2,2,,,,,,,,,,,,,,,,
24,1,,26013-100252,,"BOLT W/WASHER M10X25",4,4,,,,,,,,,,,,,,,,
25,1,,172159-83220,,"SHIM SET, PIN 38",2,2,,,,,,,,,,,,,,,,
```

Fig. 49 ブーム＆ブームブラケット BOOM & BOOM BRACKET

https://truckmanualshub.com/

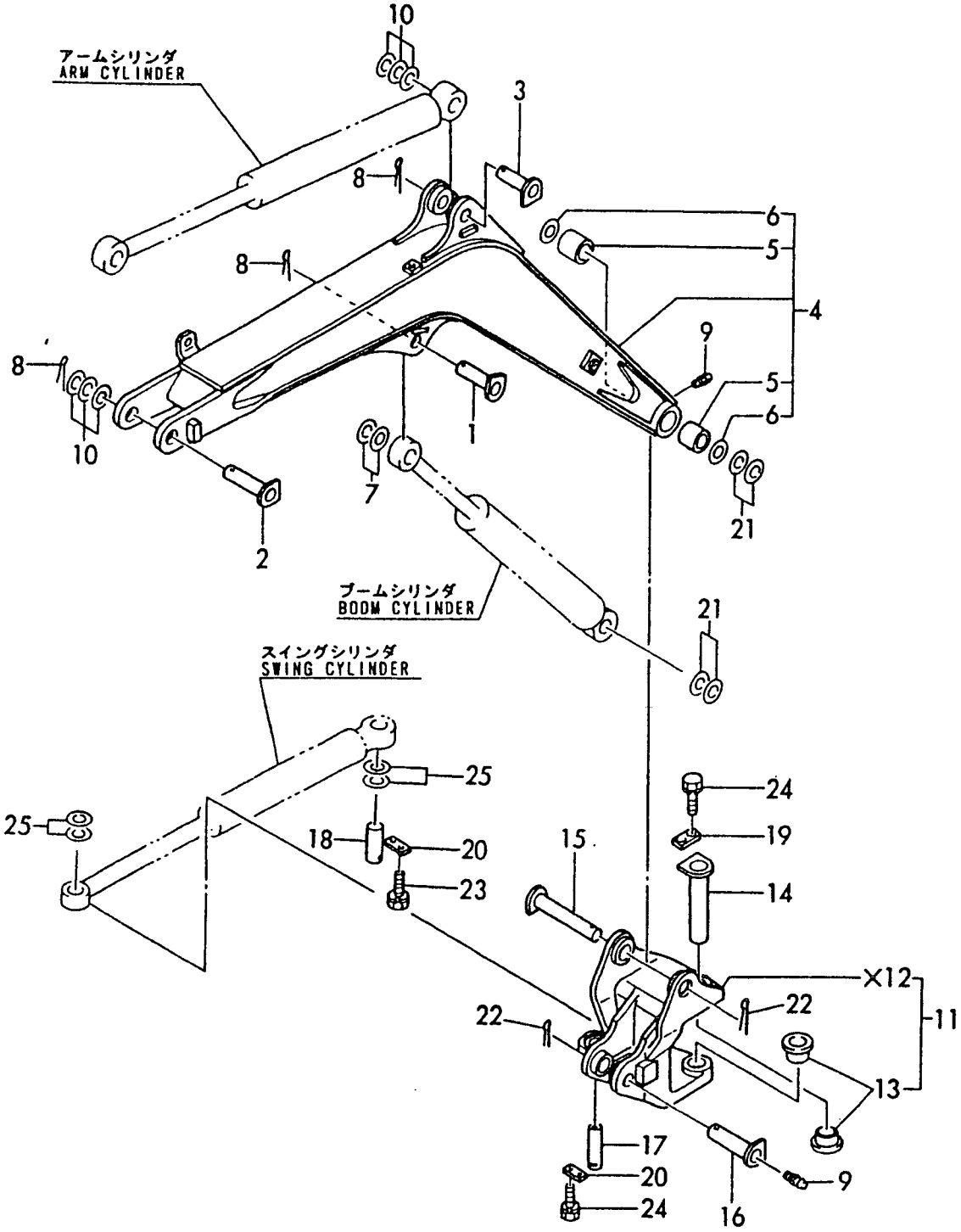

https://truckmanualshub.com/

```
1,1,,172159-82401,,"ARM 950 ASSY",1,1,,,,,,,,,,,,,,,,
2,2,,172159-82270,,"BUSH 30X45, PIN",4,4,,,,,,,,,,,,,,,,
3,2,,172183-72290,,"SEAL 38X48X 4, DUST",6,6,,,,,,,,,,,,,,,,,
4,2,,172180-82200,,"BUSH 30X45",2,2,,,,,,,,,,,,,,,,
5,1,,172159-94250,,"PIN 30-71",2,2,,,,,,,,,,,,,,,,
6,1,,22417-800450,,"COTTER PIN 8.0X45",2,2,,,,,,,,,,,,,,,,,
7,1,,24761-040000,,"NIPPLE B,GREASE",1,1,,,,,,,,,,,,,,,,
8,1,,172159-81530,,"SHIM 30, PIN ADJUST",2,2,,,,,,,,,,,,,,,,,
9,1,,172159-84401,,"LINK,BUCKET",1,1,,,,,,,,,,,,,,,,
10,2,,172159-82270,,"BUSH 30X45, PIN",2,2,,,,,,,,,,,,,,,,,
11,2,,172159-84451,,"BUSH 30-21",2,2,,,,,,,,,,,,,,,,
12,2,,172183-72290,,"SEAL 38X48X 4, DUST",6,6,,,,,,,,,,,,,,,,
13,1,,172159-84500,,"ARM(L), BUCKET",1,1,,,,,,,,,,,,,,,,
14,1,,172159-84510,,"ARM(R), BUCKET",1,1,,,,,,,,,,,,,,,,
15,1,,172159-99450,,"KIT, ARM PIN",2,2,,,,,,,,,,,,,,,,
16,2,,172159-86250,,"PIN, BUCKET",2,2,,,,,,,,,,,,,,,,
17,2,,22417-800450,,"COTTER PIN 8.0X45",2,2,,,,,,,,,,,,,,,,,
18,2,,24761-020000,,"NIPPLE PT1/8,GREASE",2,2,,,,,,,,,,,,,,,,,
19,2,,172159-81530,,"SHIM 30, PIN ADJUST",4,4,,,,,,,,,,,,,,,,,
20,2,,172149-99320,,"SHIM 30X2.3",2,2,,,,,,,,,,,,,,,,
21,2,,172149-99330,,"SHIM 30X3.2",2,2,,,,,,,,,,,,,,,,
22,1,,24761-020000,,"NIPPLE PT1/8,GREASE",2,2,,,,,,,,,,,,,,,,,
23,1,,172159-99450,,"KIT, ARM PIN",2,2,,,,,,,,,,,,,,,,
24,2,,172159-86250,,"PIN, BUCKET",2,2,,,,,,,,,,,,,,,,
25,2,,22417-800450,,"COTTER PIN 8.0X45",2,2,,,,,,,,,,,,,,,,,
26,2,,24761-020000,,"NIPPLE PT1/8,GREASE",2,2,,,,,,,,,,,,,,,,,
27,2,,172159-81530,,"SHIM 30, PIN ADJUST",2,2,,,,,,,,,,,,,,,,,
28,2,,172149-99320,,"SHIM 30X2.3",2,2,,,,,,,,,,,,,,,,
29,2,,172149-99330,,"SHIM 30X3.2",2,2,,,,,,,,,,,,,,,,
```

Fig. 50 アーム＆バケットリンク ARM & BUCKET LINK

https://truckmanualshub.com/

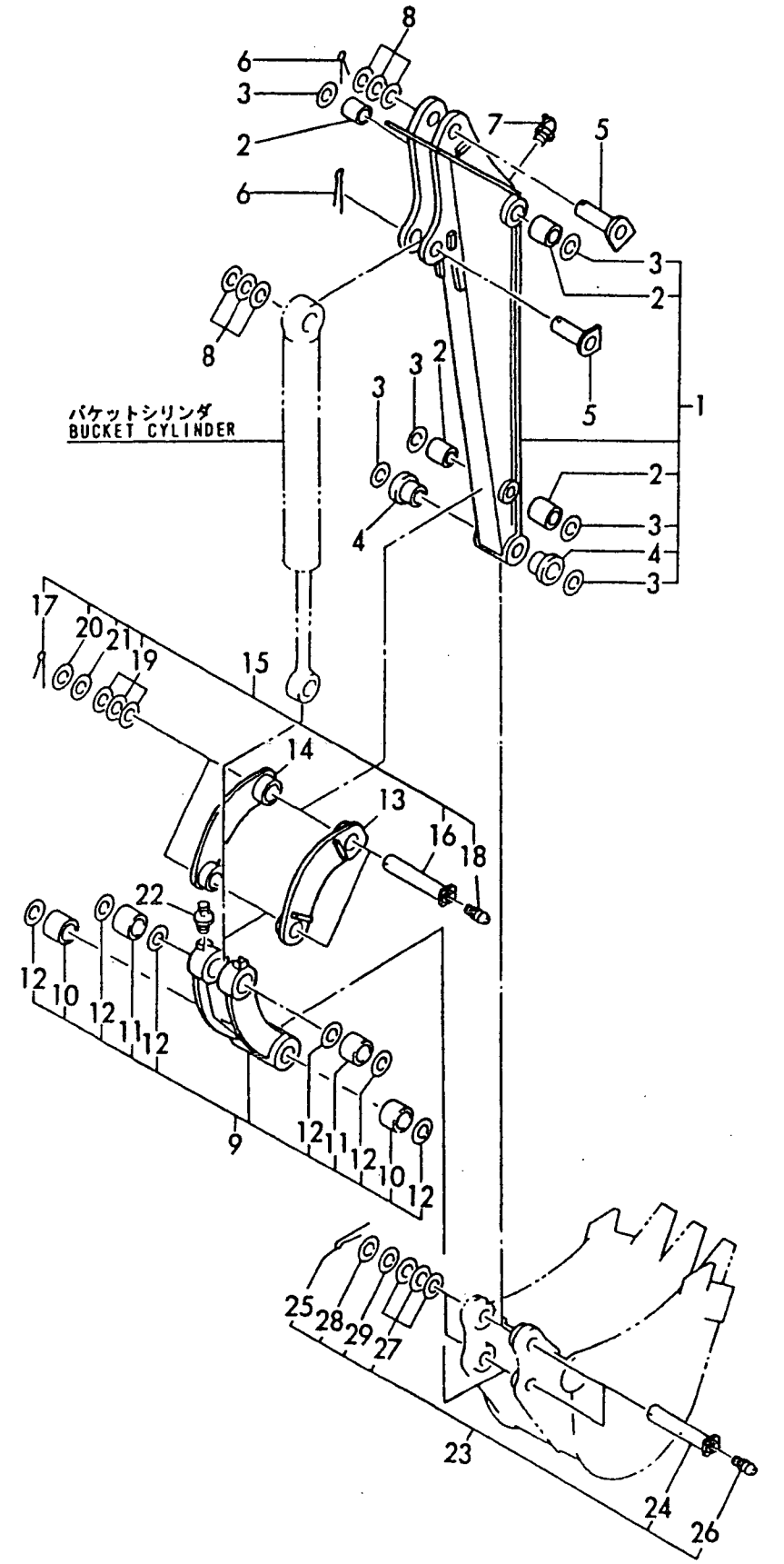

https://truckmanualshub.com/

```
1,1,,172159-81530,,"SHIM 30, PIN ADJUST",4,4,,,,,,,,,,,,,,,,
2,1,,172180-94100,,"BLADE ASSY, 1000",1,1,,,,,,,,,,,,,,,,
3,1,,172159-94250,,"PIN 30-71",2,2,,,,,,,,,,,,,,,,
4,1,,172159-94270,,"PIN 30-71B, BLADE",2,2,,,,,,,,,,,,,,,,
5,1,,22417-800450,,"COTTER PIN 8.0X45",4,4,,,,,,,,,,,,,,,,
6,1,,24761-020000,,"NIPPLE PT1/8,GREASE",2,2,,,,,,,,,,,,,,,,
7,1,,24761-040000,,"NIPPLE B,GREASE",2,2,,,,,,,,,,,,,,,,
```

Fig. 51 ブレード BLADE

https://truckmanualshub.com/

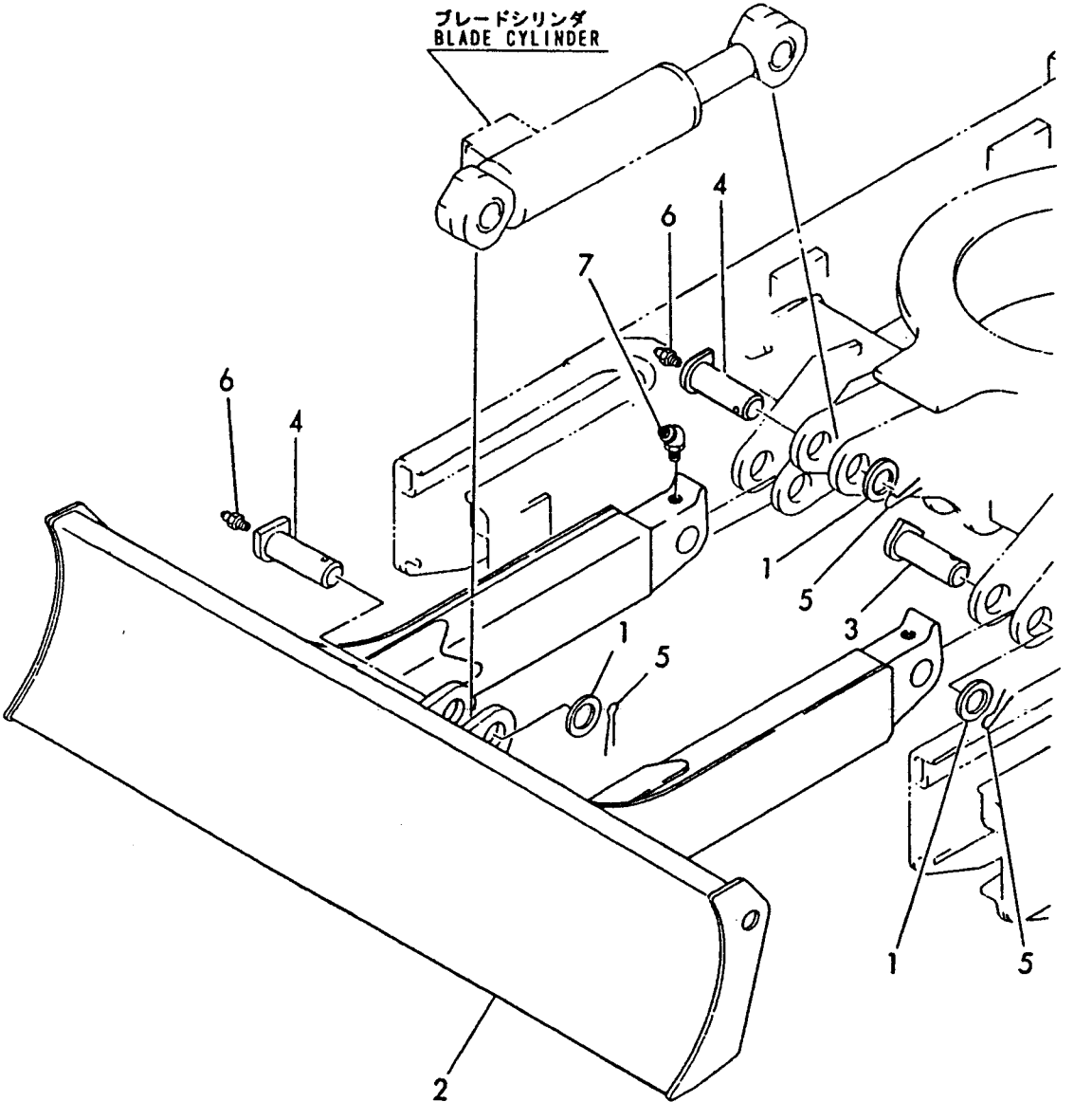

https://truckmanualshub.com/

```
1,1,,172179-74140,,"SPOOL SECTION",1,1,,,,,,,,,,,,,,,,
3,2,,172183-74300,,"O-RING P13",2,2,,,,,,,,,,,,,,,,
4,2,,172180-74320,,"WIPER,DUST",2,2,,,,,,,,,,,,,,,,
5,2,,172180-74290,,"PLATE, SEAL (L)",2,2,,,,,,,,,,,,,,,,
6,2,,172180-74280,,"BOLT M6X10",2,2,,,,,,,,,,,,,,,,
7,2,,172180-74270,,CAP(SPRING,1,1,,,,,,,,,,,,,,,,
8,2,,172180-74260,,"END, SPOOL",1,1,,,,,,,,,,,,,,,,
9,2,,172180-74250,,CATCH(SPRING,2,2,,,,,,,,,,,,,,,,
10,2,,172183-74340,,"SPRING, RETURN",1,1,,,,,,,,,,,,,,,,
11,2,,172137-74510,,"BOLT, CAP",2,2,,,,,,,,,,,,,,,,
12,2,,24315-000110,,"O-RING 1B P-11.0",1,1,,,,,,,,,,,,,,,,
13,2,,172183-74350,,"PLUG PF1/4",1,1,,,,,,,,,,,,,,,,
14,2,,23871-010000,,"PLUG PT1/8,SCREW",1,1,,,,,,,,,,,,,,,,
15,2,,24325-000550,,"O-RING 1B G-55.0",1,1,,,,,,,,,,,,,,,,
16,1,,172179-74190,,"SECTION CMP,TRAVEL(R",1,1,,,,,,,,,,,,,,,,
18,2,,172183-74300,,"O-RING P13",2,2,,,,,,,,,,,,,,,,
19,2,,172180-74320,,"WIPER,DUST",2,2,,,,,,,,,,,,,,,,
20,2,,172180-74290,,"PLATE, SEAL (L)",2,2,,,,,,,,,,,,,,,,
21,2,,172180-74280,,"BOLT M6X10",2,2,,,,,,,,,,,,,,,,
22,2,,172180-74270,,CAP(SPRING,1,1,,,,,,,,,,,,,,,,
23,2,,172180-74260,,"END, SPOOL",1,1,,,,,,,,,,,,,,,,
24,2,,172180-74250,,CATCH(SPRING,2,2,,,,,,,,,,,,,,,,
25,2,,172183-74340,,"SPRING, RETURN",1,1,,,,,,,,,,,,,,,,
26,2,,172137-74510,,"BOLT, CAP",2,2,,,,,,,,,,,,,,,,
27,2,,24315-000110,,"O-RING 1B P-11.0",1,1,,,,,,,,,,,,,,,,
28,2,,172183-74350,,"PLUG PF1/4",1,1,,,,,,,,,,,,,,,,
29,2,,23871-010000,,"PLUG PT1/8,SCREW",1,1,,,,,,,,,,,,,,,,
30,2,,24325-000550,,"O-RING 1B G-55.0",1,1,,,,,,,,,,,,,,,,
31,1,,172179-74150,,"SERVICE SECTION",1,1,,,,,,,,,,,,,,,,
33,2,,172183-74300,,"O-RING P13",2,2,,,,,,,,,,,,,,,,
34,2,,172180-74320,,"WIPER,DUST",2,2,,,,,,,,,,,,,,,,
35,2,,172180-74290,,"PLATE, SEAL (L)",2,2,,,,,,,,,,,,,,,,
36,2,,172180-74280,,"BOLT M6X10",2,2,,,,,,,,,,,,,,,,
37,2,,172180-74270,,CAP(SPRING,1,1,,,,,,,,,,,,,,,,
38,2,,172180-74260,,"END, SPOOL",1,1,,,,,,,,,,,,,,,,
39,2,,172180-74250,,CATCH(SPRING,2,2,,,,,,,,,,,,,,,,
40,2,,172137-74420,,"SPRING (A), RETURN",1,1,,,,,,,,,,,,,,,,
41,2,,172137-74510,,"BOLT, CAP",2,2,,,,,,,,,,,,,,,,
42,2,,24325-000550,,"O-RING 1B G-55.0",1,1,,,,,,,,,,,,,,,,
```

https://truckmanualshub.com/

```
1,1,,172180-74120,,"VALVE SECTION (ARM)",1,1,,,,,,,,,,,,,,,,
3,2,,24315-000220,,"O-RING 1B P-22.0",2,2,,,,,,,,,,,,,,,,
4,2,,172180-74210,,"BOLT M 6X 25",4,4,,,,,,,,,,,,,,,,
5,2,,172173-74210,,"SPOOL END",1,1,,,,,,,,,,,,,,,,
6,2,,172173-74220,,"SPRING SHEET",2,2,,,,,,,,,,,,,,,,
7,2,,172173-74230,,SPRING,1,1,,,,,,,,,,,,,,,,
8,2,,172173-74240,,CAP,1,1,,,,,,,,,,,,,,,,
9,2,,172180-74200,,CAP(PILOT,1,1,,,,,,,,,,,,,,,,
10,2,,172137-74520,,"VALVE, CHECK",1,1,,,,,,,,,,,,,,,,
11,2,,172137-74540,,"SPRING, VALVE",1,1,,,,,,,,,,,,,,,,
12,2,,172183-74370,,"GUIDE, VALVE",1,1,,,,,,,,,,,,,,,,
13,2,,172131-74080,,"O-RING 1B S9",1,1,,,,,,,,,,,,,,,,
14,1,,172183-74170,,"SECTION COMP.,SWING",1,1,,,,,,,,,,,,,,,,
16,2,,172183-74300,,"O-RING P13",2,2,,,,,,,,,,,,,,,,
17,2,,172183-74310,,"WIPER,DUST",2,2,,,,,,,,,,,,,,,,
18,2,,172183-74320,,PLATE,2,2,,,,,,,,,,,,,,,,
19,2,,172137-74500,,"BOLT, PLATE",2,2,,,,,,,,,,,,,,,,
20,2,,172137-74490,,CAP,1,1,,,,,,,,,,,,,,,,
21,2,,172131-74090,,"SHEET,SPRING",2,2,,,,,,,,,,,,,,,,
22,2,,172137-74420,,"SPRING (A), RETURN",1,1,,,,,,,,,,,,,,,,
23,2,,172137-74510,,"BOLT, CAP",2,2,,,,,,,,,,,,,,,,
24,2,,172137-74520,,"VALVE, CHECK",1,1,,,,,,,,,,,,,,,,
25,2,,172137-74540,,"SPRING, VALVE",1,1,,,,,,,,,,,,,,,,
26,2,,172137-74530,,"GUIDE, VALVE",1,1,,,,,,,,,,,,,,,,
27,2,,24325-000550,,"O-RING 1B G-55.0",1,1,,,,,,,,,,,,,,,,
```

https://truckmanualshub.com/

```
1,1,,172180-74180,,"VALVE SECTION(BOOM)",1,1,,,,,,,,,,,,,,,,
3,2,,24315-000220,,"O-RING 1B P-22.0",2,2,,,,,,,,,,,,,,,,
4,2,,172180-74210,,"BOLT M 6X 25",4,4,,,,,,,,,,,,,,,,
5,2,,172173-74210,,"SPOOL END",1,1,,,,,,,,,,,,,,,,
6,2,,172173-74220,,"SPRING SHEET",2,2,,,,,,,,,,,,,,,,
7,2,,172173-74230,,SPRING,1,1,,,,,,,,,,,,,,,,
8,2,,172173-74240,,CAP,1,1,,,,,,,,,,,,,,,,
9,2,,172180-74200,,CAP(PILOT,1,1,,,,,,,,,,,,,,,,
10,2,,172137-74520,,"VALVE, CHECK",1,1,,,,,,,,,,,,,,,,
11,2,,172137-74540,,"SPRING, VALVE",1,1,,,,,,,,,,,,,,,,
12,2,,172137-74530,,"GUIDE, VALVE",1,1,,,,,,,,,,,,,,,,
13,2,,24325-000550,,"O-RING 1B G-55.0",1,1,,,,,,,,,,,,,,,,
14,1,,172179-74160,,"VALVE SECTION(BUCKET",1,1,,,,,,,,,,,,,,,,
16,2,,24315-000220,,"O-RING 1B P-22.0",2,2,,,,,,,,,,,,,,,,
17,2,,172180-74210,,"BOLT M 6X 25",4,4,,,,,,,,,,,,,,,,
18,2,,172173-74210,,"SPOOL END",1,1,,,,,,,,,,,,,,,,
19,2,,172173-74220,,"SPRING SHEET",2,2,,,,,,,,,,,,,,,,
20,2,,172173-74230,,SPRING,1,1,,,,,,,,,,,,,,,,
21,2,,172173-74240,,CAP,1,1,,,,,,,,,,,,,,,,
22,2,,172180-74200,,CAP(PILOT,1,1,,,,,,,,,,,,,,,,
23,2,,172137-74520,,"VALVE, CHECK",1,1,,,,,,,,,,,,,,,,
24,2,,172137-74540,,"SPRING, VALVE",1,1,,,,,,,,,,,,,,,,
25,2,,172137-74530,,"GUIDE, VALVE",1,1,,,,,,,,,,,,,,,,
26,2,,24325-000550,,"O-RING 1B G-55.0",1,1,,,,,,,,,,,,,,,,
```

https://truckmanualshub.com/

```
1,1,,172180-74130,,"SPOOL SECTION(TURNIN",1,1,,,,,,,,,,,,,,,,
3,2,,24315-000220,,"O-RING 1B P-22.0",2,2,,,,,,,,,,,,,,,,
4,2,,172180-74210,,"BOLT M 6X 25",4,4,,,,,,,,,,,,,,,,
5,2,,172173-74210,,"SPOOL END",1,1,,,,,,,,,,,,,,,,
6,2,,172173-74220,,"SPRING SHEET",2,2,,,,,,,,,,,,,,,,
7,2,,172173-74230,,SPRING,1,1,,,,,,,,,,,,,,,,
8,2,,172173-74240,,CAP,1,1,,,,,,,,,,,,,,,,
9,2,,172180-74200,,CAP(PILOT,1,1,,,,,,,,,,,,,,,,
10,2,,172137-74520,,"VALVE, CHECK",1,1,,,,,,,,,,,,,,,,
11,2,,172137-74540,,"SPRING, VALVE",1,1,,,,,,,,,,,,,,,,
12,2,,172137-74530,,"GUIDE, VALVE",1,1,,,,,,,,,,,,,,,,
13,2,,24325-000550,,"O-RING 1B G-55.0",1,1,,,,,,,,,,,,,,,,
14,1,,172180-74140,,"SPOOL SECTION(BLADE)",1,1,,,,,,,,,,,,,,,,
16,2,,172183-74300,,"O-RING P13",2,2,,,,,,,,,,,,,,,,
17,2,,172180-74320,,"WIPER,DUST",2,2,,,,,,,,,,,,,,,,
18,2,,172180-74290,,"PLATE, SEAL (L)",2,2,,,,,,,,,,,,,,,,
19,2,,172180-74280,,"BOLT M6X10",2,2,,,,,,,,,,,,,,,,
20,2,,172180-74270,,CAP(SPRING,1,1,,,,,,,,,,,,,,,,
21,2,,172180-74260,,"END, SPOOL",1,1,,,,,,,,,,,,,,,,
22,2,,172180-74250,,CATCH(SPRING,2,2,,,,,,,,,,,,,,,,
23,2,,172183-74340,,"SPRING, RETURN",1,1,,,,,,,,,,,,,,,,
24,2,,172137-74510,,"BOLT, CAP",2,2,,,,,,,,,,,,,,,,
25,2,,172137-74520,,"VALVE, CHECK",1,1,,,,,,,,,,,,,,,,
26,2,,172137-74540,,"SPRING, VALVE",1,1,,,,,,,,,,,,,,,,
27,2,,172137-74530,,"GUIDE, VALVE",1,1,,,,,,,,,,,,,,,,
28,2,,24325-000550,,"O-RING 1B G-55.0",1,1,,,,,,,,,,,,,,,,
29,2,,172180-74240,,"THRUST SPACER",1,1,,,,,,,,,,,,,,,,
```

https://truckmanualshub.com/

```
Y00S3390,"Construction equipment",Excavator,B
[Info]
PcNo=Y00S3390
PcName=B17-2(AMMANN)B5020
JpnUse=0
JpnSec1=
JpnSec2=
JpnSec3=
JpnPreface=0
EngUse=1
EngSec1=CONSTRUCTION
EngSec2=EXCAVATOR (B)
EngSec3=B
EngPreface=1
```

https://truckmanualshub.com/

```
0,Y00S3390
1,001,,"VEHICLE  B17-2(EP"
2,1,,LABEL(CABIN),"B17-2 C(R)AY","B17-2 P(R)AY",,
2,2,,LABEL(CANOPY),"B17-2 C(R)AY","B17-2 P(R)AY",,
2,3,,"AIR CLEANER & SILENCER","B17-2 C(R)AY","B17-2 P(R)AY",,
2,4,,ACCELERATOR,"B17-2 C(R)AY","B17-2 P(R)AY",,
2,5,,"ENGINE MOUNT","B17-2 C(R)AY","B17-2 P(R)AY",,
2,6,,"RADIATOR & MOUNT","B17-2 C(R)AY","B17-2 P(R)AY",,
2,7,,"FUEL TANK & FUEL LINE","B17-2 C(R)AY","B17-2 P(R)AY",,
2,8,,BATTERY,"B17-2 C(R)AY","B17-2 P(R)AY",,
2,9,,"ELECTRIC PART","B17-2 C(R)AY","B17-2 P(R)AY",,
2,10,,"WORK LAMP","B17-2 C(R)AY","B17-2 P(R)AY",,
2,11,,HEATER,"B17-2 C(R)AY","B17-2 P(R)AY",,
2,12,,"ROLLER & ADJUST","B17-2 C(R)AY","B17-2 P(R)AY",,
2,13,,CRAWLER,"B17-2 C(R)AY","B17-2 P(R)AY",,
2,14,,"CONTROL EQUIPMENT(LEVER&STAND)","B17-2 C(R)AY","B17-2 P(R)AY",,
2,15,,"CONTROL EQUIPMENT(TRAVEL)","B17-2 C(R)AY","B17-2 P(R)AY",,
2,16,,"CONTROL EQUIPMENT(SWING)","B17-2 C(R)AY","B17-2 P(R)AY",,
2,17,,"CONTROL EQUIPMENT(BLADE)","B17-2 C(R)AY","B17-2 P(R)AY",,
2,18,,"CONTROL EQUIP.(CUT OFF LEVER","B17-2 C(R)AY","B17-2 P(R)AY",,
2,19,,"CONTROL EQUIP.(P.T.O.CONTROL)","B17-2 C(R)AY","B17-2 P(R)AY",,
2,20,,"FRAME & TURNING BEARING","B17-2 C(R)AY","B17-2 P(R)AY",,
2,21,,"FRAME COVER","B17-2 C(R)AY","B17-2 P(R)AY",,
2,22,,"SEAT MOUNT & STEP","B17-2 C(R)AY","B17-2 P(R)AY",,
2,23,,BONNET,"B17-2 C(R)AY","B17-2 P(R)AY",,
2,24,,CANOPY,"B17-2 C(R)AY","B17-2 P(R)AY",,
2,25,,"HYD. OIL PUMP & JOINT","B17-2 C(R)AY","B17-2 P(R)AY",,
2,26,,"BOOM CYLINDER","B17-2 C(R)AY","B17-2 P(R)AY",,
2,27,,"ARM CYLINDER","B17-2 C(R)AY","B17-2 P(R)AY",,
2,28,,"BUCKET CYLINDER","B17-2 C(R)AY","B17-2 P(R)AY",,
2,29,,"SWING CYLINDER","B17-2 C(R)AY","B17-2 P(R)AY",,
2,30,,"BLADE CYLINDER","B17-2 C(R)AY","B17-2 P(R)AY",,
2,31,,"TRAVEL MOTOR","B17-2 C(R)AY","B17-2 P(R)AY",,
2,32,,"TURNING MOTOR","B17-2 C(R)AY","B17-2 P(R)AY",,
2,33,,"SWIVEL JOINT","B17-2 C(R)AY","B17-2 P(R)AY",,
2,34,,"CONTROL VALVE","B17-2 C(R)AY","B17-2 P(R)AY",,
2,35,,"REMOTE CONTROL VALVE(LEFT)","B17-2 C(R)AY","B17-2 P(R)AY",,
2,36,,"REMOTE CONTROL VALVE(RIGHT)","B17-2 C(R)AY","B17-2 P(R)AY",,
2,37,,"LOW-HIGH VALVE","B17-2 C(R)AY","B17-2 P(R)AY",,
2,38,,"HYD. OIL TANK","B17-2 C(R)AY","B17-2 P(R)AY",,
2,39,,"HYD. OIL PIPING(TANK-PUMP-VALV","B17-2 C(R)AY","B17-2 P(R)AY",,
2,40,,"HYD. OIL PIPING(VALVE-MOTOR,BO","B17-2 C(R)AY","B17-2 P(R)AY",,
2,41,,"HYD. OIL PIPING(VALVE-SWIVEL,S","B17-2 C(R)AY","B17-2 P(R)AY",,
2,42,,"HYD. OIL PIPING(RETURN)","B17-2 C(R)AY","B17-2 P(R)AY",,
2,43,,"HYD. OIL PIPING(TRAVEL)","B17-2 C(R)AY","B17-2 P(R)AY",,
2,44,,"HYD. OIL PIPING(BOOM)","B17-2 C(R)AY","B17-2 P(R)AY",,
2,45,,"HYD. OIL PIPING(3RD VALVE)","B17-2 C(R)AY","B17-2 P(R)AY",,
2,46,,"CONTROL PIPING(DIRECT)","B17-2 C(R)AY","B17-2 P(R)AY",,
2,47,,"CONTROL PIPING(PUMP,LOW-HIGH V","B17-2 C(R)AY","B17-2 P(R)AY",,
2,48,,GREASING,"B17-2 C(R)AY","B17-2 P(R)AY",,
2,49,,"BOOM & BOOM BRACKET","B17-2 C(R)AY","B17-2 P(R)AY",,
2,50,,"ARM & BUCKET LINK","B17-2 C(R)AY","B17-2 P(R)AY",,
2,51,,BLADE,"B17-2 C(R)AY","B17-2 P(R)AY",,
2,52,,"CONTROL VALVE(TRAVEL&PTO,I/P","B17-2 C(R)AY","B17-2 P(R)AY",,
2,53,,"CONTROL VALVE(ARM&SWING,I/P","B17-2 C(R)AY","B17-2 P(R)AY",,
2,54,,"CONTROL VALVE(BOOM&BUCKET,I/P","B17-2 C(R)AY","B17-2 P(R)AY",,
2,55,,"CONTROL VALVE(TURNING&BLADE,","B17-2 C(R)AY","B17-2 P(R)AY",,
```