FERRARI

Technical Information

Empty Container Handling

CVSFERRARI
ECH08.7

Courtesy of Crane.Market

SPECIFICATIONS	**01 Manufacturer**				CVSFERRARI
	02 Model				**ECH08.7**
	03 Lifting capacity			kg	8000
	04 Load Center			mm	1225
	06 Steering				Steering wheel in the cab
	07 Tyre type	Front / Rear			Pneumatic
	08 Wheels	Number at Front/Rear (* = driven)			4* / 2
DIMENSIONS	**09 Lift, duplex mast**	Standard	H4	mm	16500
	12 Side shifter	Max + -	V1	mm	+/- 600
	13 Mast tilt angle	Forward/Backward	a/b	degrees	3/5
	14 Overall dimensions	Length	L	mm	7010
	15	Width	B	mm	4140
	16	Mast height, min.	H3	mm	10650
	17	Mast height, max	H5	mm	19050
	18	Height		mm	4120
	19	Seat height		mm	3045
	20	Min. dist. spreader from ground		mm	2300
	21 Turning radius	Inner/Outer	R 1/2	mm	340/6390
	22 Distance from front axle	center to load	L2	mm	
PERFORMANCES	**23 Stability**	ISO 1074 (Yes/No)			YES
	24 Speeds	Travelling F&R, Laden/Unladen		km/h	23,4 / 23,9
	25	Lifting Laden/Unladen		m/s	0.65/0.65
	26	Lowering Laden		m/s	0,53
	27 Drawbar pull	Max - Laden		kN	186
	28 Gradeability	Max gradeability - Laden		%	41,6
MASSES	**29 Gross vehicle weight**			kg	38500
	30 Axle load - Front	Unladen		kg	24500
	31 Axle load - Rear	Unladen		kg	14000
TYRES	**32 Tyres**	Number - Front/rear			4/2
	33	Size – Front & Rear		ins.	14.00-24
CHASSIS	**35 Wheelbase**		L3	mm.	4750
	36 Track	Between centres - driven wheels		mm.	3290
	37 Ground clearance	Under the mast		mm.	210
	38	Mid-way along the wheelbase		mm.	390
BRAKES	**39 Foot brake system**	Type/brake wheels			Multiple wet discs brakes
	40 Parking brake	Type/brake wheels			Spring brakes / Driven wheels
STEER. SYSTEM	**41 Type**				Hydraulic servo assisted
DRIVING	**42 Engine**	Manufacturer, Type			VOLVO TAD871VE
SYSTEM	**43**	Rating		kW	185
	44	Rated Speed		RPM	2200
	45	Peak Torque - at engine speed		Nm/min	1160/1200
	46	Number Cylinders / swept volume		cm3	6/7700
	48	Fuel Consumption (Average)		l/h	10 - 12
	49 Alternator	Rating		A	90
	50 Starting Batteries	Voltage / Capacity		V/Ah	2x12 / 180
	51 Drive Axle	Type			with double reduction
	52 Gear Box	Type-number of gears forward/rev.			DANA TE17 3/3
	53 Clutch	Clutch type			Torque converter
	54 Hydraulic pressure	For attachments		Bar	120
	55 Sound Level	Inside Cabine (EN12053)		dB(A)	75

Courtesy of Crane.Market

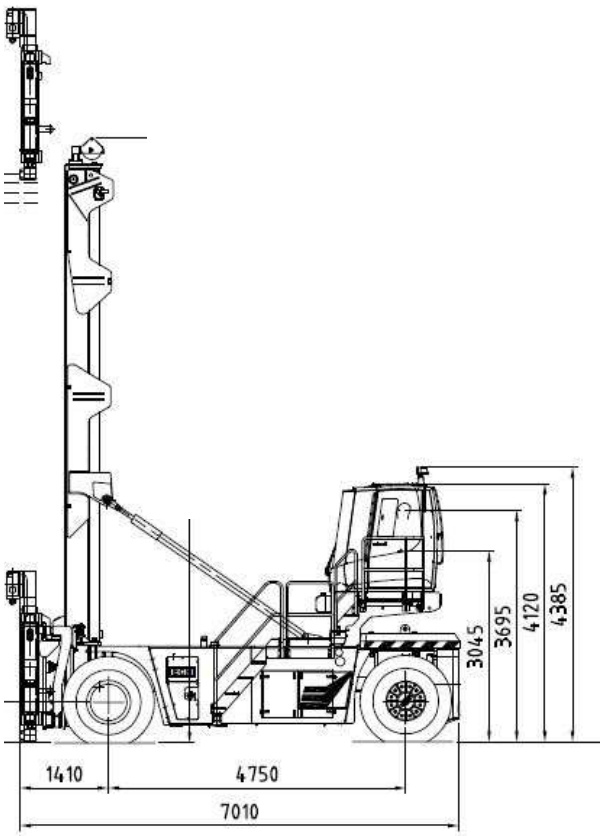

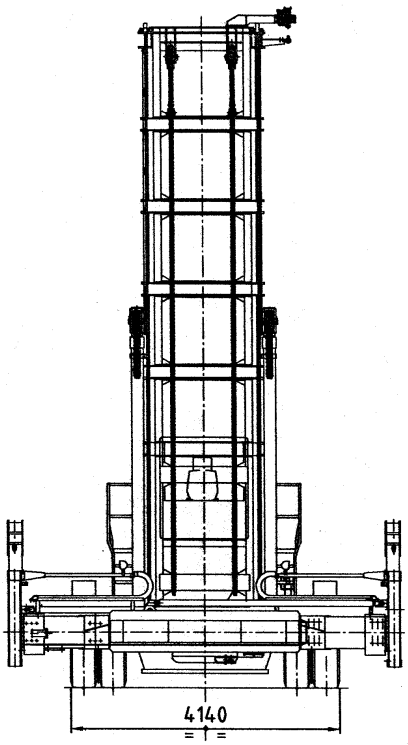

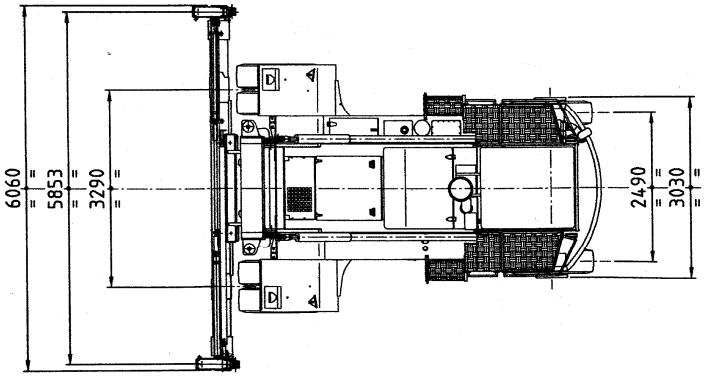

Courtesy of Crane.Market

CHASSIS
All welded box type. Torsion resistant structure. Low center of gravity.

ENGINE
VOLVO TAD871VE.
EU stage IV. Best performance and lower fuel consumption. Very low polluting level.

TRANSMISSION
DANA TE17.
Integrated torque converter and power shift - 3 Speeds forward and 3 speeds reverse. Electronic gearshift

FRONT AXLE
KESSLER extra wide front axle for maximum stability. Hub reduction. Multiple wet discs brakes. Oil cooling. Extra heavy duty type.

REAR AXLE
Maintenance free. Mounted on silent blocks. Articulating axle with double acting single cylinder. Rubber shock absorbers for lateral stability. Fully hydrostatic steering system (Danfoss).

HYDRAULIC SYSTEM
Powerful. Reliable. Variable displacement pump proportional distributors controlling lifting and tilting. Multifunctional joystick electro hydraulic type for the smoothest operation. Air / Oil cooling system with ventilating fan

ELECTRICAL SYSTEM
The most reliable and easy to service. 24V. - Two 12V. batteries of low maintenance type. High performance alternators. Modular design.

MAST EXTRA WIDE
High torsion. High quality steel. Free visibility. Heavy duty bearings. Lift cylinders hoses and chains located on the blind angles.

SIDE SPREADER
High quality steel. Compact and precise. Telescoping from 20' to 40'. All functions controlled from cab. Side mechanical tilting. Safety sensors on two corners. Double stacking side spreader as option.

The illustrations and data contained in this brochure are not binding. The manufacturer reserves the right to make changes for any reason while not altering the primary specifications

FERRARI

CVS FERRARI S.r.l. - Via Emilia - 29010 Roveleto di Cadeo (PC) ITALY
Tel. ++39.0523.503511 - Fax ++39.0523.500439
E-mail: info.mktg@cvsferrari.com

Distributed & Serviced by:

Rev. 01/10

Courtesy of Crane.Market