https://truckmanualshub.com/

WSM

WORKSHOP MANUAL
DIESEL ENGINE

03-M-E3B SERIES,
03-M-DI-E3B SERIES,
03-M-E3BG SERIES

Kubota

KiSC issued 07, 2008 A

https://truckmanualshub.com/

TO THE READER

This Workshop Manual has been prepared to provide servicing personnel with information on the mechanism, service and maintenance of 03-M-E3B, 03-M-DI-E3B and 03-M-E3BG series. It is divided into three parts, “General”, “Mechanism” and “Servicing”.

■ General

Information on the engine identification, the general precautions, maintenance check list, check and maintenance and special tools are described.

■ Mechanism

Information on the construction and function are included. This part should be understood before proceeding with troubleshooting, disassembling and servicing.

Refer to Diesel Engine Mechanism Workshop Manual (Code No. 9Y021-01875) for the one which has not been described to this workshop manual.

■ Servicing

Information on the troubleshooting, servicing specification lists, tightening torque, checking and adjusting, disassembling and assembling, and servicing which cover procedures, precautions, factory specifications and allowable limits.

All information illustrations and specifications contained in this manual are based on the latest product information available at the time of publication.

The right is reserved to make changes in all information at any time without notice.

Due to covering many models of this manual, information or picture being used, have not been specified as one model.

March 2007

© KUBOTA Corporation 2007

KiSC issued 07, 2008 A

https://truckmanualshub.com/

SAFETY FIRST

This symbol, the industry's "Safety Alert Symbol", is used throughout this manual and on labels on the machine itself to warn of the possibility of personal injury. Read these instructions carefully.

It is essential that you read the instructions and safety regulations before you attempt to repair or use this unit.

DANGER : **Indicates an imminently hazardous situation which, if not avoided, will result in death or serious injury.**

WARNING : **Indicates a potentially hazardous situation which, if not avoided, could result in death or serious injury.**

CAUTION : **Indicates a potentially hazardous situation which, if not avoided, may result in minor or moderate injury.**

■ **IMPORTANT** : **Indicates that equipment or property damage could result if instructions are not followed.**

■ **NOTE** : **Gives helpful information.**

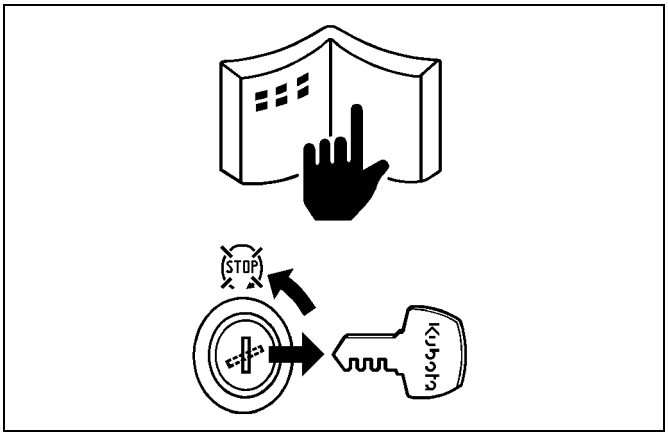

BEFORE SERVICING AND REPAIRING

- Read all instructions and safety instructions in this manual and on your engine safety decals.
- Clean the work area and engine.
- Park the machine on a firm and level ground.
- Allow the engine to cool before proceeding.
- Stop the engine, and remove the key.
- Disconnect the battery negative cable.
- Hang a "**DO NOT OPERATE**" tag in operator station.

https://truckmanualshub.com/

SAFETY STARTING

- Do not start the engine by shorting across starter terminals or bypassing the safety start switch.
- Unauthorized modifications to the engine may impair the function and / or safety and affect engine life.

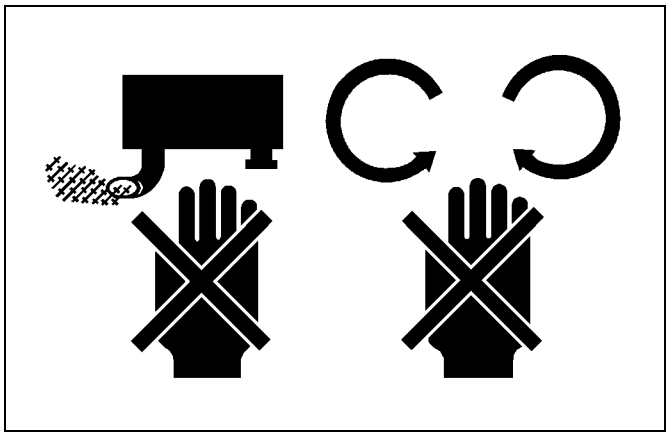

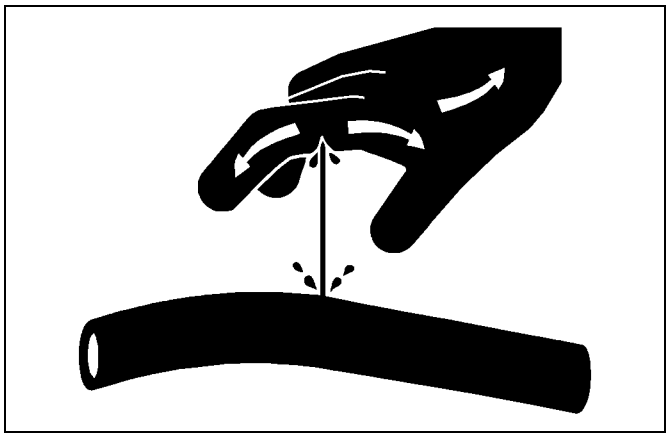

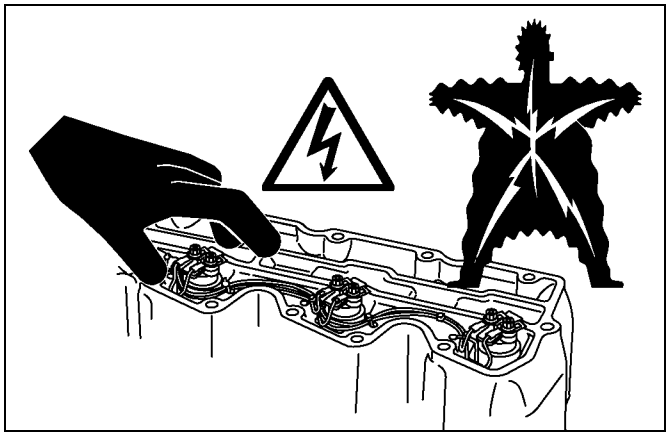

SAFETY WORKING

- Do not work on the machine while under the influence of alcohol, medication, or other substances or while fatigued.
- Wear close fitting clothing and safety equipment appropriate to the job.
- Use tools appropriate to the work. Makeshift tools, parts, and procedures are not recommended.
- When servicing is performed together by two or more persons, take care to perform all work safely.
- Do not touch the rotating or hot parts while the engine is running.
- Never remove the radiator cap while the engine is running, or immediately after stopping. Otherwise, hot water will spout out from radiator. Only remove radiator cap when cool enough to touch with bare hands. Slowly loosen the cap to first stop to relieve pressure before removing completely.
- Escaping fluid (fuel or hydraulic oil) under pressure can penetrate the skin causing serious injury. Relieve pressure before disconnecting hydraulic or fuel lines. Tighten all connections before applying pressure.
- Wear a suitable hearing protective device such as earmuffs or earplugs to protect against objectionable or uncomfortable loud noises.
- Do not open high-pressure fuel system.
  High-pressure fluid remaining in fuel lines can cause serious injury. Do not disconnect or attempt to repair fuel lines, sensors, or any other components between the high-pressure fuel pump and injectors on engines with high pressure common rail fuel system.
- High voltage exceeding 100 V is generated in the ECU, and is applied to the injector.
  Pay sufficient caution to electric shock when performing work activities.

https://truckmanualshub.com/

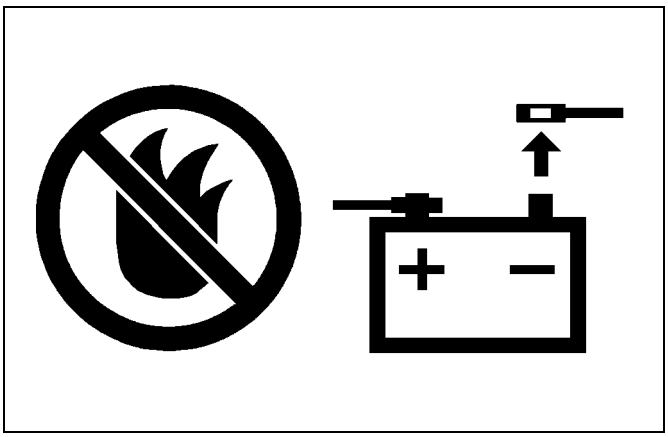

AVOID FIRES

- Fuel is extremely flammable and explosive under certain conditions. Do not smoke or allow flames or sparks in your working area.
- To avoid sparks from an accidental short circuit, always disconnect the battery negative cable first and connect it last.
- Battery gas can explode. Keep sparks and open flame away from the top of battery, especially when charging the battery.
- Make sure that no fuel has been spilled on the engine.

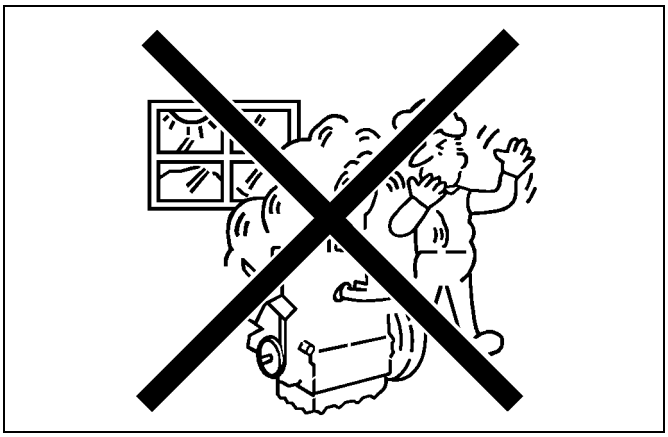

VENTILATE WORK AREA

- If the engine must be running to do some work, make sure the area is well ventilated. Never run the engine in a closed area. The exhaust gas contains poisonous carbon monoxide.

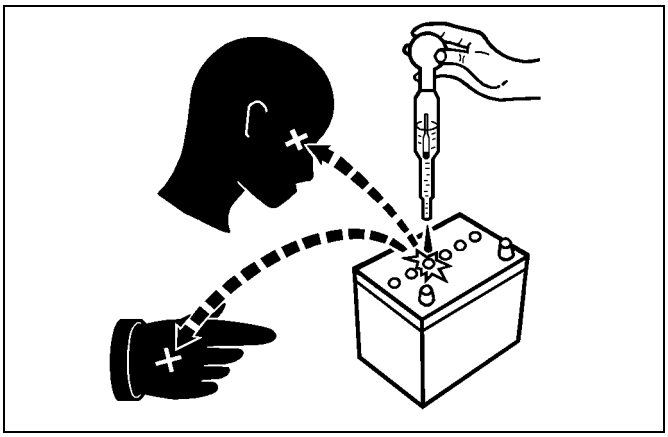

PREVENT ACID BURNS

- Sulfuric acid in battery electrolyte is poisonous. It is strong enough to burn skin, clothing and cause blindness if splashed into eyes. Keep electrolyte away from eyes, hands and clothing. If you spill electrolyte on yourself, flush with water, and get medical attention immediately.

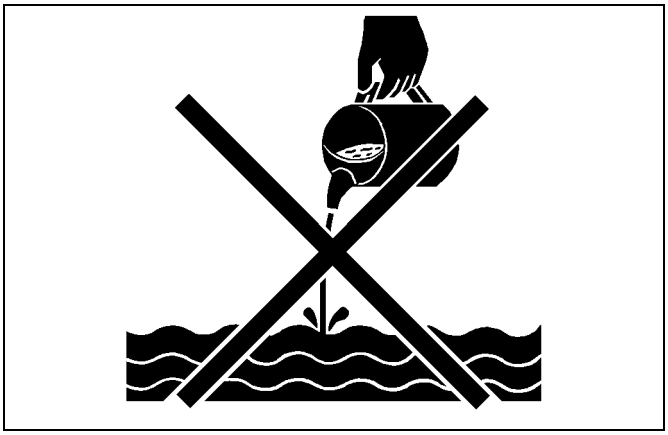

DISPOSE OF FLUIDS PROPERLY

- Do not pour fluids into the ground, down a drain, or into a stream, pond, or lake. Observe relevant environmental protection regulations when disposing of oil, fuel, coolant, electrolyte and other harmful waste.

https://truckmanualshub.com/

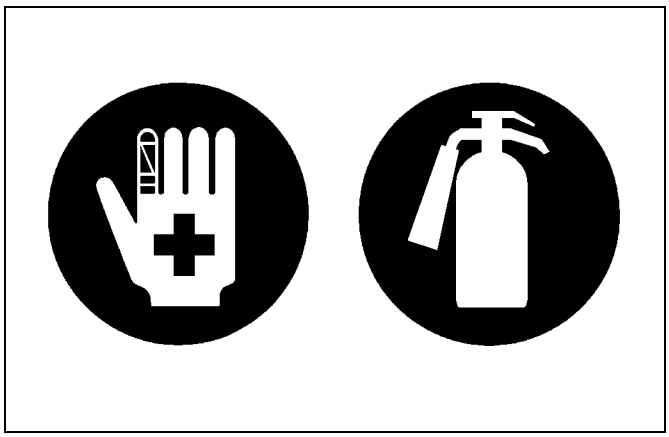

PREPARE FOR EMERGENCIES

- Keep a first aid kit and fire extinguisher handy at all times.
- Keep emergency numbers for doctors, ambulance service, hospital and fire department near your telephone.

https://truckmanualshub.com/

SPECIFICATIONS

Model		D1503-M	D1703-M
Number of Cylinders		3	
Type		Vertical, Water-cooled, 4 cycle diesel engine	
Bore × Stroke		83.0 X 92.4 mm (3.27 X 3.64 in.)	87.0 X 92.4 mm (3.43 X 3.64 in.)
Total Displacement		1499 cm^3 (91.47 cu.in.)	1647 cm^3 (100.5 cu.in.)
ISO Net Continuous		19.5 KW / 2800 min^{-1} (rpm) (26.1 HP / 2800 min^{-1} (rpm))	21.2 KW / 2800 min^{-1} (rpm) (28.4 HP / 2800 min^{-1} (rpm))
ISO/SAE Net Intermittent		22.4 KW / 2800 min^{-1} (rpm) (30.0 HP / 2800 min^{-1} (rpm))	24.4 KW / 2800 min^{-1} (rpm) (32.7 HP / 2800 min^{-1} (rpm))
SAE Gross Intermittent		23.8 KW / 2800 min^{-1} (rpm) (31.9 HP / 2800min^{-1} (rpm))	26.1 KW / 2800 min^{-1} (rpm) (35.0 HP / 2800 min^{-1} (rpm))
Maximum Bare Speed		3020 min^{-1} (rpm)	
Minimum Bare Idling Speed		750 to 850 min^{-1} (rpm)	
Combustion Chamber		Spherical Type (E-TVCS)	
Fuel Injection Pump		PFR 3M Type Mini Pump (DENSO)	
Governor		Mechanical all speed governor	
Direction of Rotation		Counter-clockwise (viewd from flywheel side)	
Injection Nozzle		OPD Mini Nozzle (DENSO)	
Injection Timing		0.2662 rad (15.25 °) before T.D.C.	0.2836 rad (16.25 °) before T.D.C.
Firing Order		1-2-3	
Injection Pressure		13.73 MPa (140.0 kgf/cm^2, 1991 psi)	
Compression Ratio		22.8 : 1	22.0 : 1
Lubricating System		Forced Lubrication by Trochoid Pump	
Oil Pressure Indicating		Electrical type switch	
Lubricating Filter		Full flow paper filter (cartridge type)	
Cooling System		Pressurized radiator, forced circulation with water pump	
Starting System		Electric Starting with Starter	
Starting Motor		12 V, 1.2 kW	
Starting Support Device		By glow plug in combustion chamber	
EGR		NONE	
Battery		12 V, 60 AH equivalent	
Charging Alternator		12 V, 360 W	
Fuel		Diesel Fuel No.2-D (ASTM D975)	
Lubricating Oil		Class CF lubricating oil as per API classification is recommended. For details on recommended lubricating oils, see page G-7, 10	
Lubricating Oil Capacity	Oil Pan Depth 90 mm (3.5 in.)	5.6 L (1.5 U.S.gals)	
	Oil Pan Depth 124 mm (4.88 in.)	7.0 L (1.8 U.S.gals)	
Weight (Dry)		148 kg (326 lbs)	

* The specification described above is of the standard engine of each model.
* Conversion Formula : HP = 0.746 kW, PS = 0.7355 kW

W10275180

https://truckmanualshub.com/

Model		**D1803-M**
Number of Cylinders		3
Type		Vertical, Water-cooled, 4 cycle diesel engine
Bore × Stroke		87.0 X 102.4 mm (3.43 X 4.031 in.)
Total Displacement		1826 cm^3 (111.4 cu.in.)
ISO Net Continuous		22.8 KW / 2700 min^{-1} (rpm) (30.6 HP / 2700 min^{-1} (rpm))
ISO/SAE Net Intermittent		26.3 KW / 2700 min^{-1} (rpm) (35.3 HP / 2700 min^{-1} (rpm))
SAE Gross Intermittent		27.9 KW / 2700 min^{-1} (rpm) (37.4 HP / 2700 min^{-1} (rpm))
Maximum Bare Speed		3020 min^{-1} (rpm)
Minimum Bare Idling Speed		750 to 850 min^{-1} (rpm)
Combustion Chamber		Spherical Type (E-TVCS)
Fuel Injection Pump		PFR 3M Type Mini Pump (DENSO)
Governor		Mechanical all speed governor
Direction of Rotation		Counter-clockwise (viewd from flywheel side)
Injection Nozzle		OPD Mini Nozzle (DENSO)
Injection Timing		0.2836 rad (16.25 °) before T.D.C.
Firing Order		1-2-3
Injection Pressure		13.73 MPa (140.0 kgf/cm^2, 1991 psi)
Compression Ratio		24.3 : 1
Lubricating System		Forced Lubrication by Trochoid Pump
Oil Pressure Indicating		Electrical type switch
Lubricating Filter		Full flow paper filter (cartridge type)
Cooling System		Pressurized radiator, forced circulation with water pump
Starting System		Electric Starting with Starter
Starting Motor		12 V, 2.0 kW
Starting Support Device		By glow plug in combustion chamber
EGR		NONE
Battery		12 V, 92 AH equivalent
Charging Alternator		12 V, 360 W
Fuel		Diesel Fuel No.2-D (ASTM D975)
Lubricating Oil		Class CF lubricating oil as per API classification is recommended. For details on recommended lubricating oils, see page G-7, 10
Lubricating Oil Capacity	Oil Pan Depth 90 mm (3.5 in.)	5.6 L (1.5 U.S.gals)
	Oil Pan Depth 124 mm (4.88 in.)	7.0 L (1.8 U.S.gals)
Weight (Dry)		151 kg (333 lbs)

* The specification described above is of the standard engine of each model.
* Conversion Formula : HP = 0.746 kW, PS = 0.7355 kW

W10316200

https://truckmanualshub.com/

Model		V2003-M	V2203-M
Number of Cylinders		4	
Type		Vertical, Water-cooled, 4 cycle diesel engine	
Bore × Stroke		83.0 X 92.4 mm (3.27 X 3.64 in.)	87.0 X 92.4 mm (3.43 X 3.64 in.)
Total Displacement		1999 cm^3 (122.0 cu.in.)	2197 cm^3 (134.1 cu.in.)
ISO Net Continuous		26.7 KW / 2800 min^{-1} (rpm) (35.8 HP / 2800 min^{-1} (rpm))	29.6 KW / 2800 min^{-1} (rpm) (39.7 HP / 2800 min^{-1} (rpm))
ISO/SAE Net Intermittent		30.8 KW / 2800 min^{-1} (rpm) (41.3 HP / 2800 min^{-1} (rpm))	34.1 KW / 2800 min^{-1} (rpm) (45.7 HP / 2800 min^{-1} (rpm))
SAE Gross Intermittent		32.6 KW / 2800 min^{-1} (rpm) (43.7 HP / 2800 min^{-1} (rpm))	35.9 KW / 2800 min^{-1} (rpm) (48.1 HP / 2800 min^{-1} (rpm))
Maximum Bare Speed		3020 min^{-1} (rpm)	
Minimum Bare Idling Speed		750 to 850 min^{-1} (rpm)	
Combustion Chamber		Spherical Type (E-TVCS)	
Fuel Injection Pump		PFR 4M Type Mini Pump (DENSO)	
Governor		Mechanical all speed governor	
Direction of Rotation		Counter-clockwise (viewd from flywheel side)	
Injection Nozzle		OPD Mini Nozzle (DENSO)	
Injection Timing		0.2836 rad (16.25 °) before T.D.C.	
Firing Order		1-3-4-2	
Injection Pressure		13.73 MPa (140.0 kgf/cm^2, 1991 psi)	
Compression Ratio		22.8 : 1	22.0 : 1
Lubricating System		Forced Lubrication by Trochoid Pump	
Oil Pressure Indicating		Electrical type switch	
Lubricating Filter		Full flow paper filter (cartridge type)	
Cooling System		Pressurized radiator, forced circulation with water pump	
Starting System		Electric Starting with Starter	
Starting Motor		12 V, 1.4 kW	
Starting Support Device		By glow plug in combustion chamber	
EGR		NONE	
Battery		12 V, 88 AH equivalent	
Charging Alternator		12 V, 480 W	
Fuel		Diesel Fuel No.2-D (ASTM D975)	
Lubricating Oil		Class CF lubricating oil as per API classification is recommended. For details on recommended lubricating oils, see page G-7, 10	
Lubricating Oil Capacity	Oil Pan Depth 90 mm (3.5 in.)	7.6 L (2.0 U.S.gals)	
	Oil Pan Depth 124 mm (4.88 in.)	9.5 L (2.5 U.S.gals)	
Weight (Dry)		180 kg (397 lbs)	

* The specification described above is of the standard engine of each model.
* Conversion Formula : HP = 0.746 kW, PS = 0.7355 kW

W10384770

https://truckmanualshub.com/

Model		**V2403-M**	**V2403-M-T**
Number of Cylinders		4	
Type		Vertical, Water-cooled, 4 cycle diesel engine	
Bore × Stroke		87.0 X 102.4 mm (3.43 X 4.031 in.)	
Total Displacement		2434 cm^3 (148.5 cu.in.)	
ISO Net Continuous		30.2 KW / 2700 min^{-1} (rpm) (40.5 HP / 2700 min^{-1} (rpm))	36.4 KW / 2700 min^{-1} (rpm) (48.8 HP / 2700 min^{-1} (rpm))
ISO/SAE Net Intermittent		34.8 KW / 2700 min^{-1} (rpm) (46.7 HP / 2700 min^{-1} (rpm))	41.9 KW / 2700 min^{-1} (rpm) (56.2 HP / 2700 min^{-1} (rpm))
SAE Gross Intermittent		36.5 KW / 2700 min^{-1} (rpm) (48.9 HP / 2700 min^{-1} (rpm))	44.0 KW / 2700 min^{-1} (rpm) (59.0 HP / 2700 min^{-1} (rpm))
Maximum Bare Speed		3020 min^{-1} (rpm)	2950 min^{-1} (rpm)
Minimum Bare Idling Speed		750 to 850 min^{-1} (rpm)	750 min^{-1} (rpm)
Combustion Chamber		Spherical Type (E-TVCS)	
Fuel Injection Pump		PFR 4M Type Mini Pump (DENSO)	
Governor		Mechanical all speed governor	
Direction of Rotation		Counter-clockwise (viewd from flywheel side)	
Injection Nozzle		OPD Mini Nozzle (DENSO)	
Injection Timing		0.2836 rad (16.25 °) before T.D.C.	0.14 rad (8.3 °) before T.D.C.
Firing Order		1-3-4-2	
Injection Pressure		13.73 MPa (140.0 kgf/cm^2, 1991 psi)	
Compression Ratio		23.2 : 1	23.0 : 1
Lubricating System		Forced Lubrication by Trochoid Pump	
Oil Pressure Indicating		Electrical type switch	
Lubricating Filter		Full flow paper filter (cartridge type)	
Cooling System		Pressurized radiator, forced circulation with water pump	
Starting System		Electric Starting with Starter	
Starting Motor		12 V, 2.0 kW	
Starting Support Device		By glow plug in combustion chamber	
EGR		NONE	
Battery		12 V, 92 AH equivalent	
Charging Alternator		12 V, 480 W	
Fuel		Diesel Fuel No.2-D (ASTM D975)	
Lubricating Oil		Class CF lubricating oil as per API classification is recommended. For details on recommended lubricating oils, see page G-7, 10	
Lubricating Oil Capacity	Oil Pan Depth 90 mm (3.5 in.)	7.6 L (2.0 U.S.gals)	–
	Oil Pan Depth 124 mm (4.88 in.)	9.5 L (2.5 U.S.gals)	
Weight (Dry)		184 kg (406 lbs)	190 kg (419 lbs)

* The specification described above is of the standard engine of each model.
* Conversion Formula : HP = 0.746 kW, PS = 0.7355 kW

W10334350

https://truckmanualshub.com/

Model		**D1803-M-DI**
Number of Cylinders		3
Type		Vertical, Water-cooled, 4 cycle diesel engine
Bore × Stroke		87.0 X 102.4 mm (3.43 X 4.031 in.)
Total Displacement		1826 cm^3 (111.4 cu.in.)
ISO Net Continuous		23.2 KW / 2700 min^{-1} (rpm) (31.1 HP / 2700 min^{-1} (rpm))
ISO/SAE Net Intermittent		26.7 KW / 2700 min^{-1} (rpm) (35.8 HP / 2700 min^{-1} (rpm))
SAE Gross Intermittent		27.9 KW / 2700 min^{-1} (rpm) (37.4 HP / 2700 min^{-1} (rpm))
Maximum Bare Speed		2920 min^{-1} (rpm)
Minimum Bare Idling Speed		850 to 950 min^{-1} (rpm)
Combustion Chamber		Reentrant Type (Direct Injection)
Fuel Injection Pump		Bosch “**K**” Type Mini Pump
Governor		Mechanical all speed governor
Direction of Rotation		Counter-clockwise (viewd from flywheel side)
Injection Nozzle		Bosch “**P**” Type Hole Nozzle
Injection Timing		0.087 rad (5.0 °) before T.D.C.
Firing Order		1-2-3
Injection Pressure	1st stage	18.63 MPa (190.0 kgf/cm^2, 2702 psi)
	2nd stage	22.56 MPa (230.0 kgf/cm^2, 3271 psi)
Compression Ratio		20.5 : 1
Lubricating System		Forced Lubrication by Trochoid Pump
Oil Pressure Indicating		Electrical type switch
Lubricating Filter		Full flow paper filter (cartridge type)
Cooling System		Pressurized radiator, forced circulation with water pump
Starting System		Electric Starting with Starter
Starting Motor		12 V, 1.4 kW
Starting Support Device		By glow plug in combustion chamber
EGR		NONE
Battery		12 V, 88 AH equivalent
Charging Alternator		12 V, 360 W
Fuel		Diesel Fuel No.2-D (ASTM D975)
Lubricating Oil		Class CF lubricating oil as per API classification is recommended. For details on recommended lubricating oils, see page G-7, 10
Lubricating Oil Capacity	Oil Pan Depth 90 mm (3.5 in.)	5.6 L (1.5 U.S.gals)
	Oil Pan Depth 124 mm (4.88 in.)	7.0 L (1.8 U.S.gals)
Weight (Dry)		151 kg (333 lbs)

* The specification described above is of the standard engine of each model.
* Conversion Formula : HP = 0.746 kW, PS = 0.7355 kW

W10343470

https://truckmanualshub.com/

Model		**V2403-M-DI**	**V2403-M-DI-T**
Number of Cylinders		4	
Type		Vertical, Water-cooled, 4 cycle diesel engine	
Bore × Stroke		87.0 X 102.4 mm (3.43 X 4.031 in.)	
Total Displacement		2434 cm^3 (148.5 cu.in.)	
ISO Net Continuous		30.5 KW / 2700 min^{-1} (rpm) (40.9 HP / 2700 min^{-1} (rpm))	30.7 KW / 2400 min^{-1} (rpm) (41.2 HP / 2400 min^{-1} (rpm))
ISO/SAE Net Intermittent		35.1 KW / 2700 min^{-1} (rpm) (47.1 HP / 2700 min^{-1} (rpm))	35.3 KW / 2400 min^{-1} (rpm) (47.3 HP / 2400 min^{-1} (rpm))
SAE Gross Intermittent		36.5 KW / 2700 min^{-1} (rpm) (48.9 HP / 2700 min^{-1} (rpm))	36.5 KW / 2400 min^{-1} (rpm) (48.9 HP / 2400 min^{-1} (rpm))
Maximum Bare Speed		2920 min^{-1} (rpm)	2450 min^{-1} (rpm)
Minimum Bare Idling Speed		850 to 950 min^{-1} (rpm)	900 min^{-1} (rpm)
Combustion Chamber		Reentrant Type (Direct Injection)	
Fuel Injection Pump		Bosch “**K**” Type Mini Pump	
Governor		Mechanical all speed governor	
Direction of Rotation		Counter-clockwise (viewd from flywheel side)	
Injection Nozzle		Bosch “**P**” Type Hole Nozzle	
Injection Timing		0.087 rad (5.0 °) before T.D.C.	0.096 rad (5.5 °) before T.D.C.
Firing Order		1-3-4-2	
Injection Pressure	1st stage	18.63 MPa (190.0 kgf/cm^2, 2702 psi)	
	2nd stage	22.56 MPa (230.0 kgf/cm^2, 3271 psi)	
Compression Ratio		20.5 : 1	20.2 : 1
Lubricating System		Forced Lubrication by Trochoid Pump	
Oil Pressure Indicating		Electrical type switch	
Lubricating Filter		Full flow paper filter (cartridge type)	
Cooling System		Pressurized radiator, forced circulation with water pump	
Starting System		Electric Starting with Starter	
Starting Motor		12 V, 2.0 kW	
Starting Support Device		By glow plug in combustion chamber	
EGR		NONE	
Battery		12 V, 92 AH equivalent	
Charging Alternator		12 V, 480 W	
Fuel		Diesel Fuel No.2-D (ASTM D975)	
Lubricating Oil		Class CF lubricating oil as per API classification is recommended. For details on recommended lubricating oils, see page G-7, 10	
Lubricating Oil Capacity	Oil Pan Depth 90 mm (3.5 in.)	7.6 L (2.0 U.S.gals)	
	Oil Pan Depth 124 mm (4.88 in.)	9.5 L (2.5 U.S.gals)	
Weight (Dry)		184 kg (406 lbs)	190 kg (416 lbs)

* The specification described above is of the standard engine of each model.
* Conversion Formula : HP = 0.746 kW, PS = 0.7355 kW

W10452650

https://truckmanualshub.com/

Model		**D1703-M-BG**	
Number of Cylinders		3	
Type		Vertical, Water-cooled, 4 cycle diesel engine	
Bore × Stroke		87.0 X 92.4 mm (3.43 X 3.64 in.)	
Total Displacement		1647 cm^3 (100.5 cu.in.)	
ISO Net Continuous		14.0 KW / 1500 min^{-1} (rpm) (18.8 HP / 1500 min^{-1} (rpm))	16.9 KW / 1800 min^{-1} (rpm) (22.7 HP / 1800 min^{-1} (rpm))
ISO/SAE Net Intermittent		16.1 KW / 1500 min^{-1} (rpm) (21.6 HP / 1500 min^{-1} (rpm))	19.5 KW / 1800 min^{-1} (rpm) (26.1 HP / 1800 min^{-1} (rpm))
SAE Gross Intermittent		16.6 KW / 1500 min^{-1} (rpm) (22.3 HP / 1500 min^{-1} (rpm))	20.2 KW / 1800 min^{-1} (rpm) (27.1 HP / 1800 min^{-1} (rpm))
Maximum Bare Speed		2120 min^{-1} (rpm)	
Minimum Bare Idling Speed		2120 min^{-1} (rpm)	
Combustion Chamber		Spherical Type (E-TVCS)	
Fuel Injection Pump		PFR 3M Type Mini Pump (DENSO)	
Governor		Mechanical all speed governor + Electronic Governor	
Direction of Rotation		Counter-clockwise (viewd from flywheel side)	
Injection Nozzle		OPD Mini Nozzle (DENSO)	
Injection Timing		0.2487 rad (14.25 °) before T.D.C.	
Firing Order		1-2-3	
Injection Pressure		13.73 MPa (140.0 kgf/cm^2, 1991 psi)	
Compression Ratio		22.0 : 1	
Lubricating System		Forced Lubrication by Trochoid Pump	
Oil Pressure Indicating		Electrical type switch	
Lubricating Filter		Full flow paper filter (cartridge type)	
Cooling System		Pressurized radiator, forced circulation with water pump	
Starting System		Electric Starting with Starter	
Starting Motor		12 V, 1.4 kW	
Starting Support Device		By glow plug in combustion chamber	
EGR		NONE	
Battery		12 V, 60 AH equivalent	
Charging Alternator		12 V, 480 W	
Fuel		Diesel Fuel No.2-D (ASTM D975)	
Lubricating Oil		Class CF lubricating oil as per API classification is recommended. For details on recommended lubricating oils, see page G-7, 10	
Lubricating Oil Capacity	Oil Pan Depth 90 mm (3.5 in.)	5.6 L (1.5 U.S.gals)	
	Oil Pan Depth 124 mm (4.88 in.)	7.0 L (1.8 U.S.gals)	
Weight (Dry)		164 kg (362 lbs)	

* The specification described above is of the standard engine of each model.
* Conversion Formula : HP = 0.746 kW, PS = 0.7355 kW

W10336120

https://truckmanualshub.com/

Model		**V2003-M-BG**	
Number of Cylinders		4	
Type		Vertical, Water-cooled, 4 cycle diesel engine	
Bore × Stroke		83.0 X 92.4 mm (3.27 X 3.64 in.)	
Total Displacement		1999 cm^3 (122.0 cu.in.)	
ISO Net Continuous		17.5 KW / 1500 min^{-1} (rpm) (23.5 HP / 1500 min^{-1} (rpm))	20.3 KW / 1800 min^{-1} (rpm) (27.2 HP / 1800 min^{-1} (rpm))
ISO/SAE Net Intermittent		20.1 KW / 1500 min^{-1} (rpm) (27.0 HP / 1500 min^{-1} (rpm))	23.4 KW / 1800 min^{-1} (rpm) (31.4 HP / 1800 min^{-1} (rpm))
SAE Gross Intermittent		20.6 KW / 1500 min^{-1} (rpm) (27.6 HP / 1500 min^{-1} (rpm))	24.3 KW / 1800 min^{-1} (rpm) (32.6 HP / 1800 min^{-1} (rpm))
Maximum Bare Speed		2120 min^{-1} (rpm)	
Minimum Bare Idling Speed		2120 min^{-1} (rpm)	
Combustion Chamber		Spherical Type (E-TVCS)	
Fuel Injection Pump		PFR 4M Type Mini Pump (DENSO)	
Governor		Mechanical all speed governor + Electronic Governor	
Direction of Rotation		Counter-clockwise (viewd from flywheel side)	
Injection Nozzle		OPD Mini Nozzle (DENSO)	
Injection Timing		0.2487 rad (14.25 °) before T.D.C.	
Firing Order		1-3-4-2	
Injection Pressure		13.73 MPa (140.0 kgf/cm^2, 1991 psi)	
Compression Ratio		22.8 : 1	
Lubricating System		Forced Lubrication by Trochoid Pump	
Oil Pressure Indicating		Electrical type switch	
Lubricating Filter		Full flow paper filter (cartridge type)	
Cooling System		Pressurized radiator, forced circulation with water pump	
Starting System		Electric Starting with Starter	
Starting Motor		12 V, 1.4 kW	
Starting Support Device		By glow plug in combustion chamber	
EGR		NONE	
Battery		12 V, 88 AH equivalent	
Charging Alternator		12 V, 480 W	
Fuel		Diesel Fuel No.2-D (ASTM D975)	
Lubricating Oil		Class CF lubricating oil as per API classification is recommended. For details on recommended lubricating oils, see page G-7, 10	
Lubricating Oil Capacity	Oil Pan Depth 90 mm (3.5 in.)	7.6 L (2.0 U.S.gals)	
	Oil Pan Depth 124 mm (4.88 in.)	9.5 L (2.5 U.S.gals)	
Weight (Dry)		195 kg (430 lbs)	

* The specification described above is of the standard engine of each model.
* Conversion Formula : HP = 0.746 kW, PS = 0.7355 kW

W10389960

https://truckmanualshub.com/

Model		**V2003-M-T-BG**	
Number of Cylinders		4	
Type		Vertical, Water-cooled, 4 cycle diesel engine	
Bore × Stroke		83.0 X 92.4 mm (3.27 X 3.64 in.)	
Total Displacement		1999 cm^3 (122.0 cu.in.)	
ISO Net Continuous		22.3 KW / 1500 min^{-1} (rpm) (29.9 HP / 1500 min^{-1} (rpm))	25.7 KW / 1800 min^{-1} (rpm) (34.5 HP / 1800 min^{-1} (rpm))
ISO/SAE Net Intermittent		25.7 KW / 1500 min^{-1} (rpm) (34.5 HP / 1500 min^{-1} (rpm))	29.6 KW / 1800 min^{-1} (rpm) (39.7 HP / 1800 min^{-1} (rpm))
SAE Gross Intermittent		26.2 KW / 1500 min^{-1} (rpm) (35.1 HP / 1500 min^{-1} (rpm))	30.6 KW / 1800 min^{-1} (rpm) (41.0 HP / 1800 min^{-1} (rpm))
Maximum Bare Speed		2120 min^{-1} (rpm)	
Minimum Bare Idling Speed		2120 min^{-1} (rpm)	
Combustion Chamber		Spherical Type (E-TVCS)	
Fuel Injection Pump		PFR 4M Type Mini Pump (DENSO)	
Governor		Mechanical all speed governor + Electronic Governor	
Direction of Rotation		Counter-clockwise (viewd from flywheel side)	
Injection Nozzle		OPD Mini Nozzle (DENSO)	
Injection Timing		0.2662 rad (15.25 °) before T.D.C.	
Firing Order		1-3-4-2	
Injection Pressure		13.73 MPa (140.0 kgf/cm^2, 1991 psi)	
Compression Ratio		21.7 : 1	
Lubricating System		Forced Lubrication by Trochoid Pump	
Oil Pressure Indicating		Electrical type switch	
Lubricating Filter		Full flow paper filter (cartridge type)	
Cooling System		Pressurized radiator, forced circulation with water pump	
Starting System		Electric Starting with Starter	
Starting Motor		12 V, 1.4 kW	
Starting Support Device		By glow plug in combustion chamber	
EGR		NONE	
Battery		12 V, 88 AH equivalent	
Charging Alternator		12 V, 480 W	
Fuel		Diesel Fuel No.2-D (ASTM D975)	
Lubricating Oil		Class CF lubricating oil as per API classification is recommended. For details on recommended lubricating oils, see page G-7, 10	
Lubricating Oil Capacity	Oil Pan Depth 90 mm (3.5 in.)	7.6 L (2.0 U.S.gals)	
	Oil Pan Depth 124 mm (4.88 in.)	9.5 L (2.5 U.S.gals)	
Weight (Dry)		208 kg (459 lbs)	

* The specification described above is of the standard engine of each model.
* Conversion Formula : HP = 0.746 kW, PS = 0.7355 kW

W10413710

https://truckmanualshub.com/

Model		**V2203-M-BG**	
Number of Cylinders		4	
Type		Vertical, Water-cooled, 4 cycle diesel engine	
Bore × Stroke		87.0 X 92.4 mm (3.43 X 3.64 in.)	
Total Displacement		2197 cm^3 (134.1 cu.in.)	
ISO Net Continuous		18.8 KW / 1500 min^{-1} (rpm) (25.2 HP / 1500 min^{-1} (rpm))	22.6 KW / 1800 min^{-1} (rpm) (30.3 HP / 1800 min^{-1} (rpm))
ISO/SAE Net Intermittent		21.7 KW / 1500 min^{-1} (rpm) (29.1 HP / 1500 min^{-1} (rpm))	26.0 KW / 1800 min^{-1} (rpm) (34.9 HP / 1800 min^{-1} (rpm))
SAE Gross Intermittent		22.2 KW / 1500 min^{-1} (rpm) (29.8 HP / 1500 min^{-1} (rpm))	26.9 KW / 1800 min^{-1} (rpm) (36.1 HP / 1800 min^{-1} (rpm))
Maximum Bare Speed		2120 min^{-1} (rpm)	
Minimum Bare Idling Speed		2120 min^{-1} (rpm)	
Combustion Chamber		Spherical Type (E-TVCS)	
Fuel Injection Pump		PFR 4M Type Mini Pump (DENSO)	
Governor		Mechanical all speed governor + Electronic Governor	
Direction of Rotation		Counter-clockwise (viewd from flywheel side)	
Injection Nozzle		OPD Mini Nozzle (DENSO)	
Injection Timing		0.2487 rad (14.25 °) before T.D.C.	
Firing Order		1-3-4-2	
Injection Pressure		13.73 MPa (140.0 kgf/cm^2, 1991 psi)	
Compression Ratio		22.0 : 1	
Lubricating System		Forced Lubrication by Trochoid Pump	
Oil Pressure Indicating		Electrical type switch	
Lubricating Filter		Full flow paper filter (cartridge type)	
Cooling System		Pressurized radiator, forced circulation with water pump	
Starting System		Electric Starting with Starter	
Starting Motor		12 V, 1.4 kW	
Starting Support Device		By glow plug in combustion chamber	
EGR		NONE	
Battery		12 V, 88 AH equivalent	
Charging Alternator		12 V, 480 W	
Fuel		Diesel Fuel No.2-D (ASTM D975)	
Lubricating Oil		Class CF lubricating oil as per API classification is recommended. For details on recommended lubricating oils, see page G-7, 10	
Lubricating Oil Capacity	Oil Pan Depth 90 mm (3.5 in.)	7.6 L (2.0 U.S.gals)	
	Oil Pan Depth 124 mm (4.88 in.)	9.5 L (2.5 U.S.gals)	
Weight (Dry)		195 kg (430 lbs)	

* The specification described above is of the standard engine of each model.
* Conversion Formula : HP = 0.746 kW, PS = 0.7355 kW

W10419300

https://truckmanualshub.com/

Model		**V2403-M-BG**	
Number of Cylinders		4	
Type		Vertical, Water-cooled, 4 cycle diesel engine	
Bore × Stroke		87.0 X 102.4 mm (3.43 X 4.031 in.)	
Total Displacement		2434 cm^3 (148.5 cu.in.)	
ISO Net Continuous		21.5 KW / 1500 min^{-1} (rpm) (28.8 HP / 1500 min^{-1} (rpm))	25.1 KW / 1800 min^{-1} (rpm) (33.7 HP / 1800 min^{-1} (rpm))
ISO/SAE Net Intermittent		24.8 KW / 1500 min^{-1} (rpm) (33.3 HP / 1500 min^{-1} (rpm))	28.9 KW / 1800 min^{-1} (rpm) (38.8 HP / 1800 min^{-1} (rpm))
SAE Gross Intermittent		25.3 KW / 1500 min^{-1} (rpm) (33.9 HP / 1500 min^{-1} (rpm))	29.8 KW / 1800 min^{-1} (rpm) (40.0 HP / 1800 min^{-1} (rpm))
Maximum Bare Speed		2120 min^{-1} (rpm)	
Minimum Bare Idling Speed		2120 min^{-1} (rpm)	
Combustion Chamber		Spherical Type (E-TVCS)	
Fuel Injection Pump		PFR 4M Type Mini Pump (DENSO)	
Governor		Mechanical all speed governor + Electronic Governor	
Direction of Rotation		Counter-clockwise (viewd from flywheel side)	
Injection Nozzle		OPD Mini Nozzle (DENSO)	
Injection Timing		0.2487 rad (14.25 °) before T.D.C.	
Firing Order		1-3-4-2	
Injection Pressure		13.73 MPa (140.0 kgf/cm^2, 1991 psi)	
Compression Ratio		23.2 : 1	
Lubricating System		Forced Lubrication by Trochoid Pump	
Oil Pressure Indicating		Electrical type switch	
Lubricating Filter		Full flow paper filter (cartridge type)	
Cooling System		Pressurized radiator, forced circulation with water pump	
Starting System		Electric Starting with Starter	
Starting Motor		12 V, 2.0 kW	
Starting Support Device		By glow plug in combustion chamber	
EGR		NONE	
Battery		12 V, 88 AH equivalent	
Charging Alternator		12 V, 480 W	
Fuel		Diesel Fuel No.2-D (ASTM D975)	
Lubricating Oil		Class CF lubricating oil as per API classification is recommended. For details on recommended lubricating oils, see page G-7, 10	
Lubricating Oil Capacity	Oil Pan Depth 90 mm (3.5 in.)	7.6 L (2.0 U.S.gals)	
	Oil Pan Depth 124 mm (4.88 in.)	9.5 L (2.5 U.S.gals)	
Weight (Dry)		190 kg (419 lbs)	

* The specification described above is of the standard engine of each model.
* Conversion Formula : HP = 0.746 kW, PS = 0.7355 kW

W10424850

https://truckmanualshub.com/

DIMENSIONS

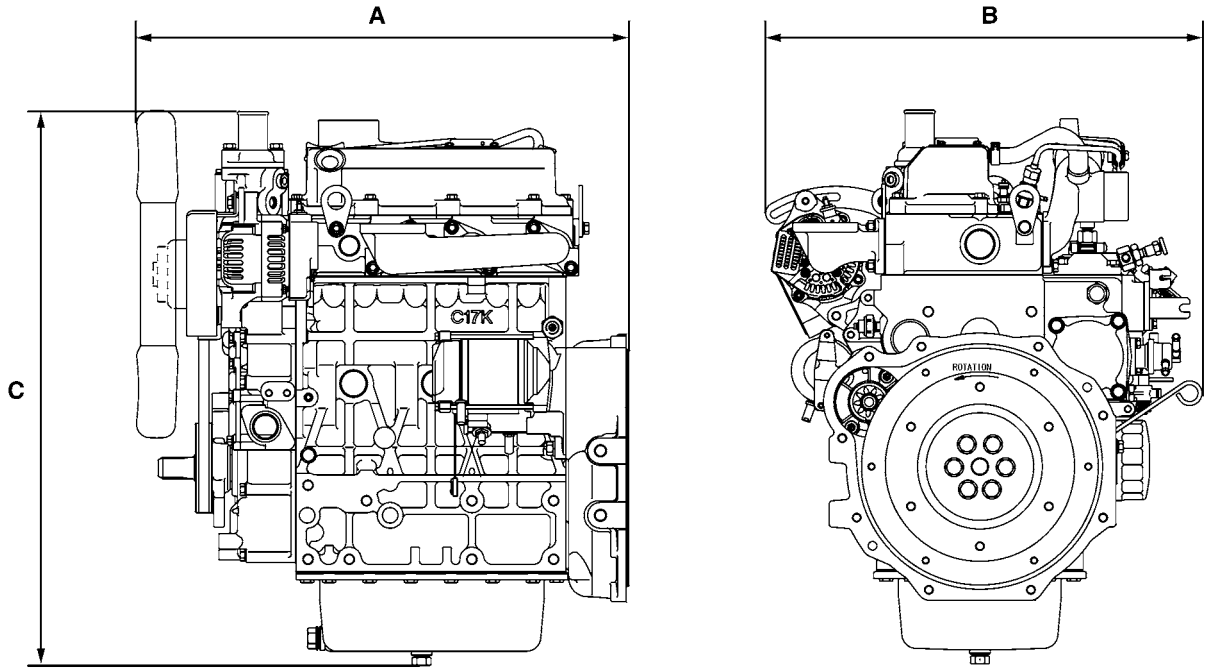

3EEADACFP001A

	D1503-M	D1703-M	D1803-M
A	567.0 mm (22.32 in.)	560.0 mm (22.05 in.)	560.0 mm (22.05 in.)
B	512.0 mm (20.16 in.)	480.0 mm (18.90 in.)	480.0 mm (18.90 in.)
C	643.0 mm (25.31 in.)	643.0 mm (25.31 in.)	648.0 mm (25.51 in.)

W1031045

https://truckmanualshub.com/

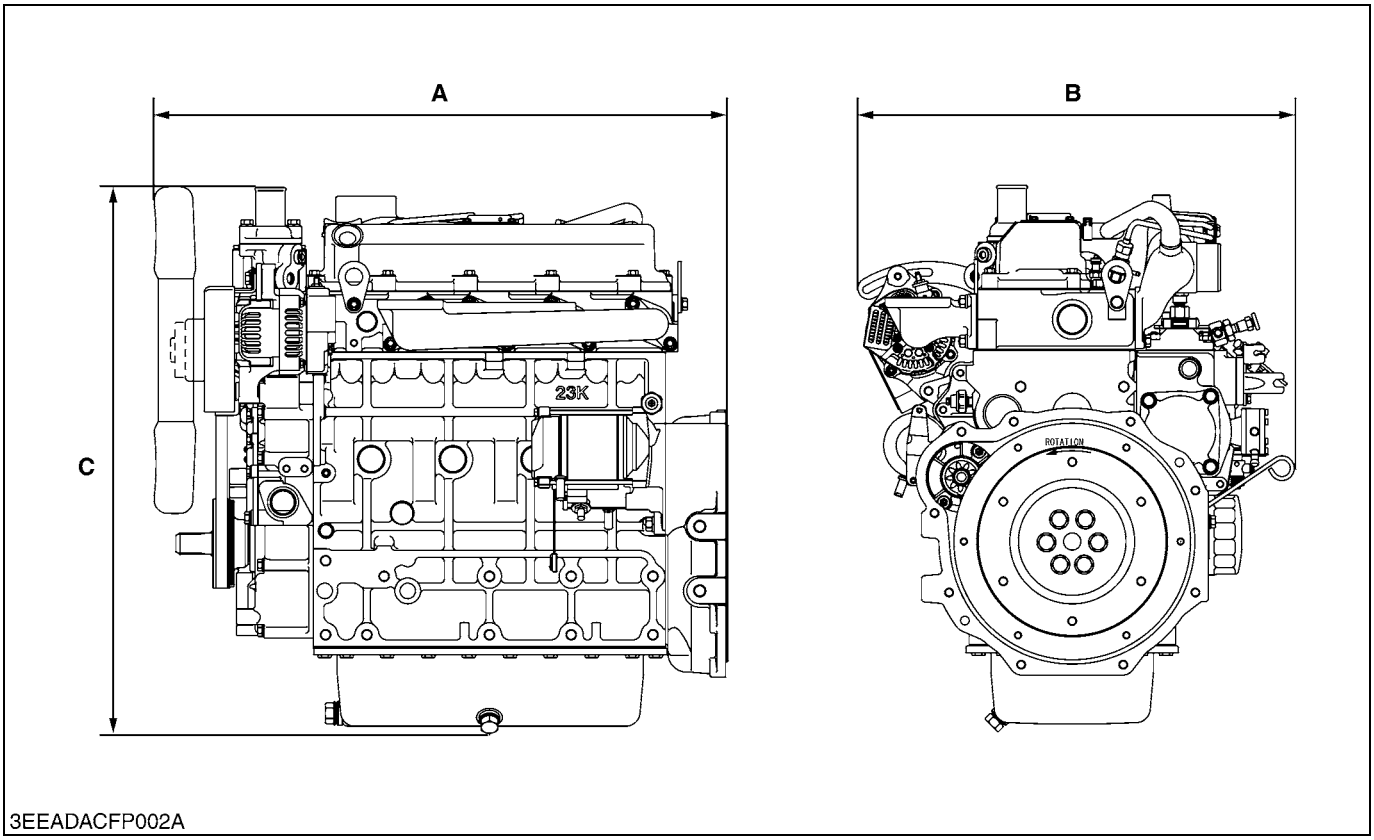

	V2003-M	V2203-M	V2403-M	V2403-M-T
A	652.0 mm (25.67 in.)	652.0 mm (25.67 in.)	652.0 mm (25.67 in.)	667.1 mm (26.26 in.)
B	480.0 mm (18.90 in.)	480.0 mm (18.90 in.)	480.0 mm (18.90 in.)	449.0 mm (17.68 in.)
C	643.0 mm (25.31 in.)	643.0 mm (25.31 in.)	648.0 mm (25.51 in.)	737.3 mm (29.03 in.)

W1028881

https://truckmanualshub.com/

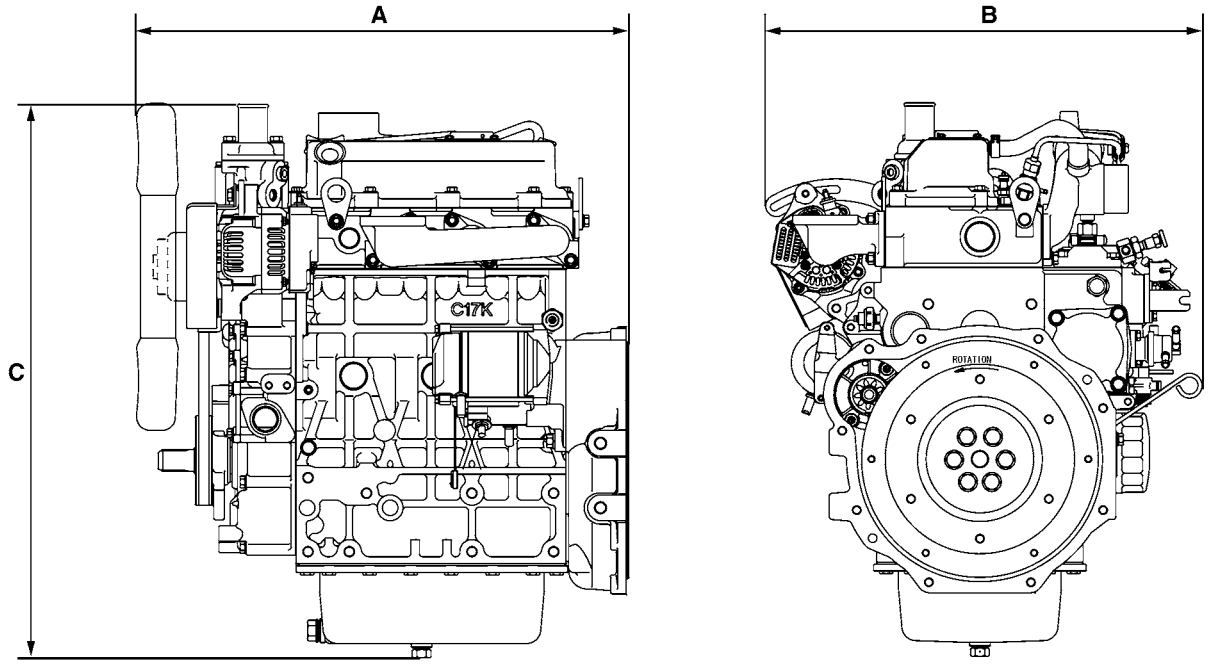

3EEADABFP001B

	D1803-M-DI
A	560.0 mm (22.05 in.)
B	492.0 mm (19.37 in.)
C	636.0 mm (25.04 in.)

W1035766

https://truckmanualshub.com/

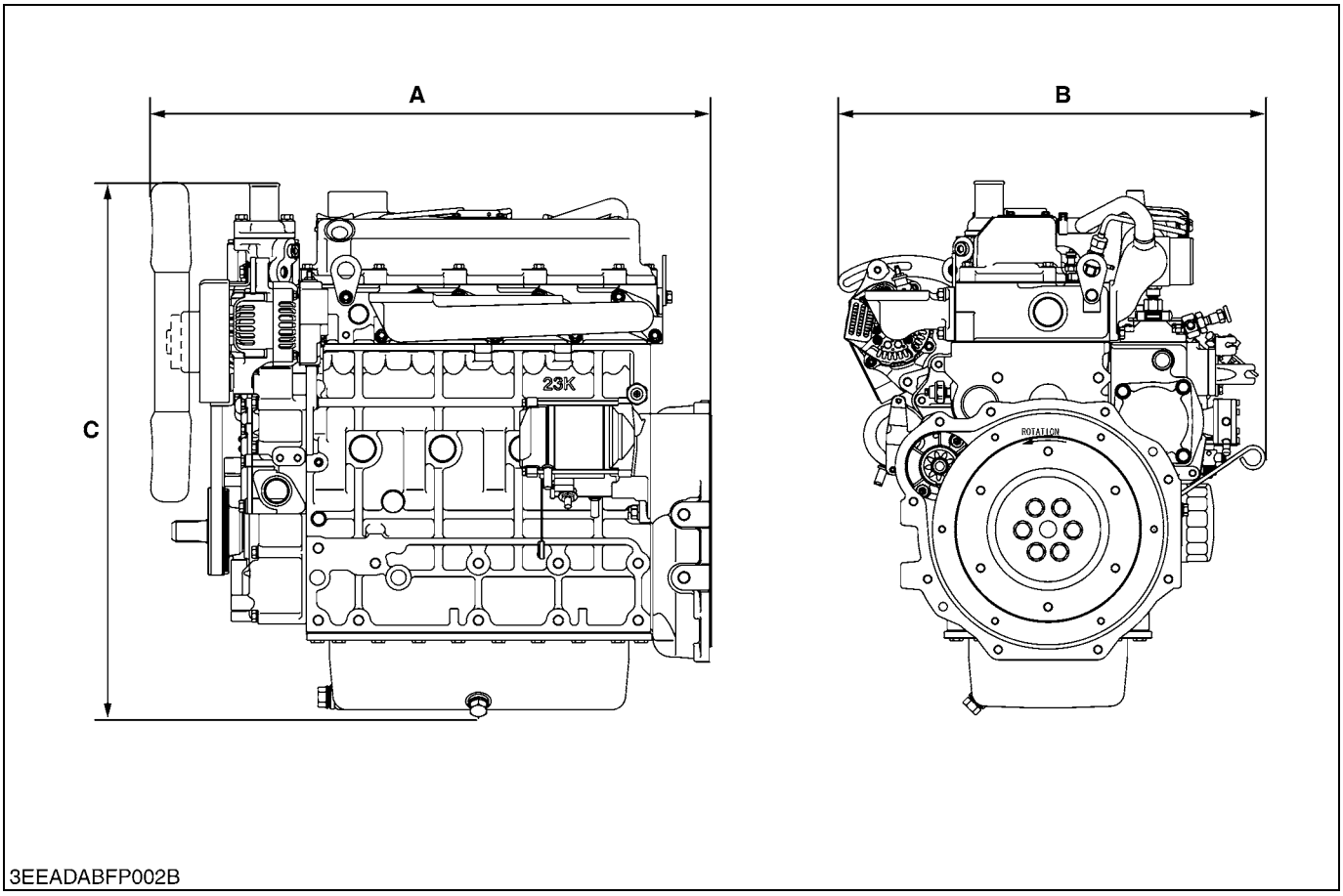

	V2403-M-DI	V2403-M-DI-T
A	655.0 mm (25.79 in.)	667.1 mm (26.26 in.)
B	492.0 mm (19.37 in.)	449.0 mm (17.68 in.)
C	636.0 mm (25.04 in.)	737.3 mm (29.03 in.)

W1035816

https://truckmanualshub.com/

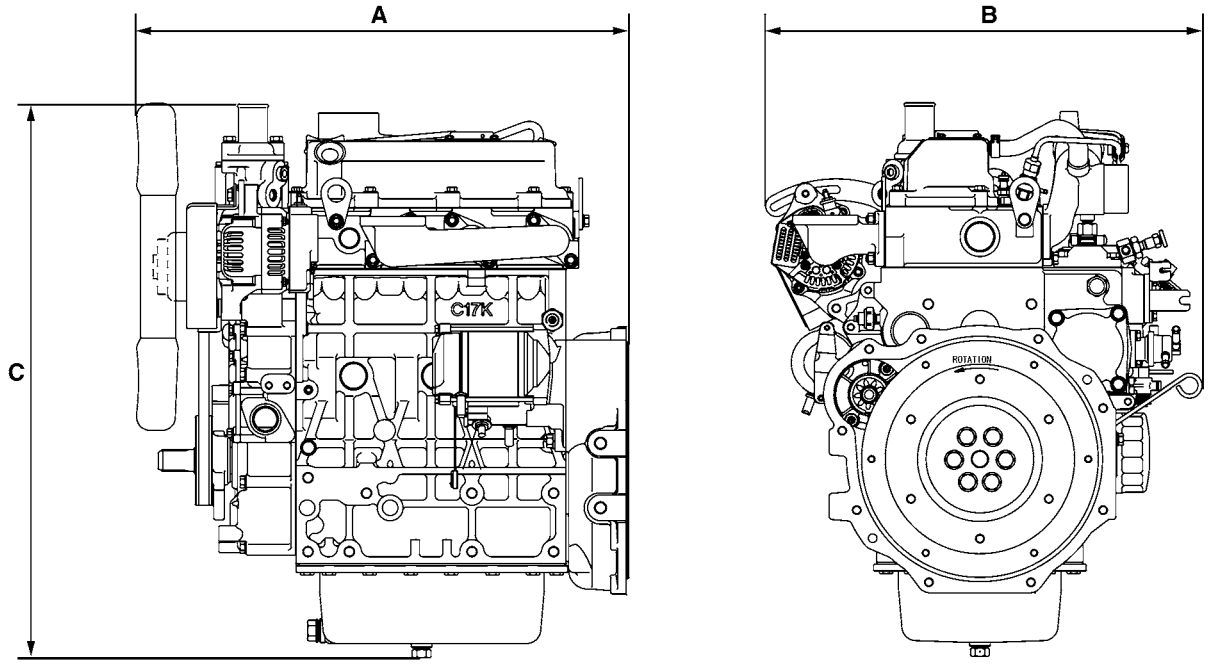

3EEADABFP001B

	D1703-M-BG
A	605.6 mm (23.84 in.)
B	505.0 mm (19.88 in.)
C	642.8 mm (25.31 in.)

W1036026

https://truckmanualshub.com/

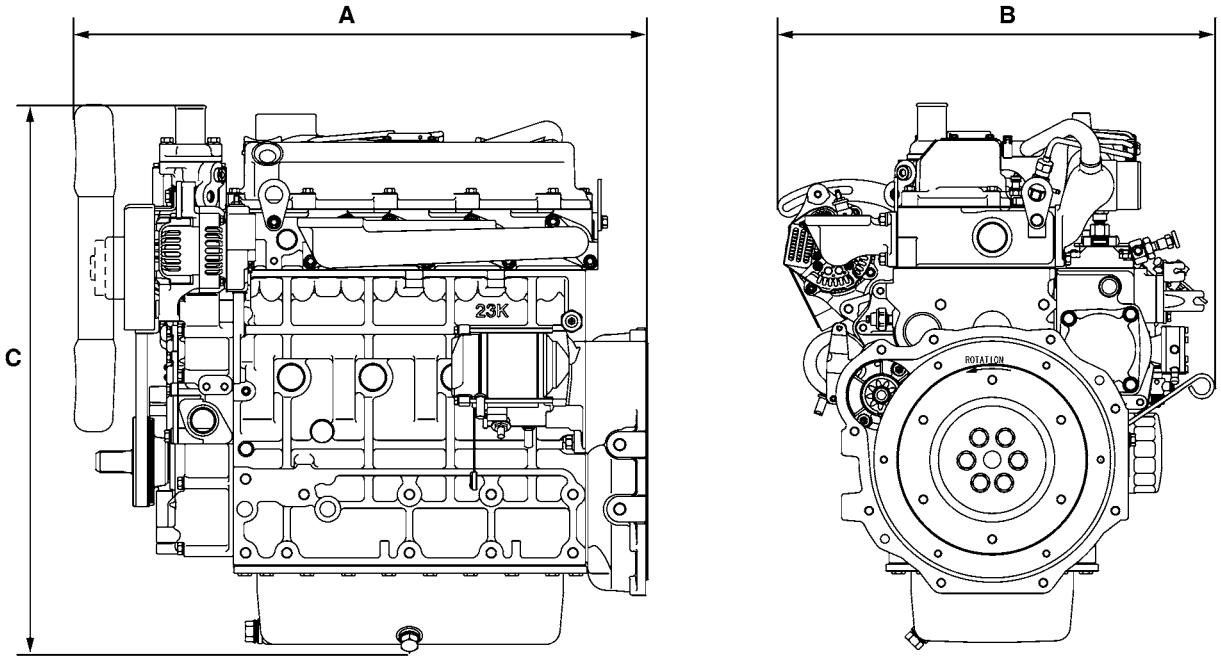

3EEADABFP002B

	V2003-M-BG	V2003-M-T-BG	V2203-M-BG	V2403-M-BG
A	700.6 mm (27.58 in.)	700.6 mm (27.58 in.)	700.6 mm (27.58 in.)	700.6 mm (27.58 in.)
B	505.0 mm (19.88 in.)	505.0 mm (19.88 in.)	505.0 mm (19.88 in.)	505.0 mm (19.88 in.)
C	633.3 mm (24.93 in.)	674.0 mm (26.54 in.)	633.3 mm (24.93 in.)	684.0 mm (26.93 in.)

W1035948

WIRING DIAGRAM

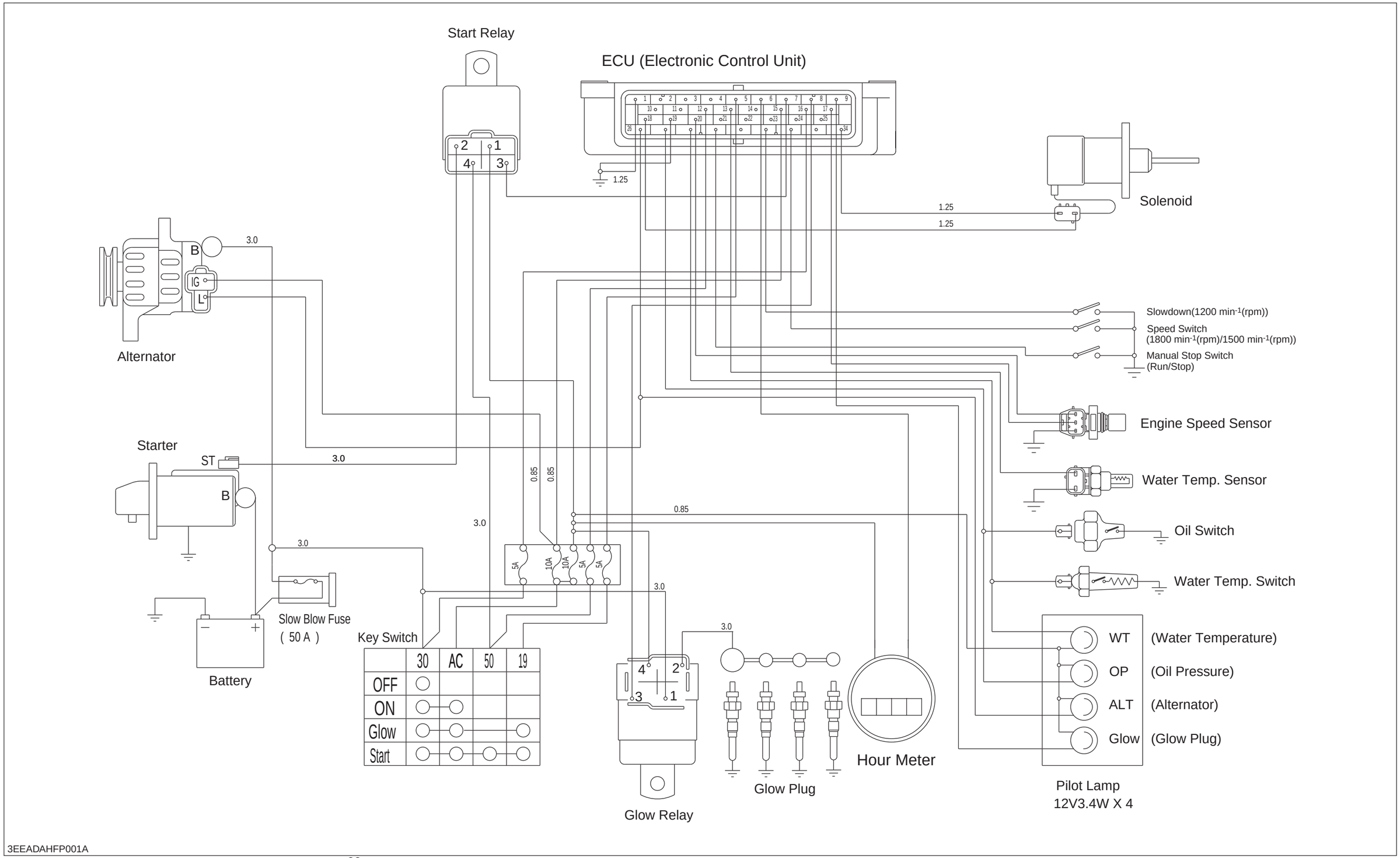

https://truckmanualshub.com/

GENERAL

CONTENTS

1. ENGINE IDENTIFICATION G-1
   [1] MODEL NAME AND ENGINE SERIAL NUMBER G-1
   [2] E3B ENGINE G-3
   [3] CYLINDER NUMBER G-3
2. GENERAL PRECAUTIONS G-4
3. MAINTENANCE CHECK LIST G-5
4. CHECK AND MAINTENANCE G-8
   [1] DAILY CHECK POINTS G-8
   [2] CHECK POINTS OF INITIAL 50 HOURS G-10
   [3] CHECK POINTS OF EVERY 50 HOURS G-12
   [4] CHECK POINTS OF EVERY 100 HOURS G-13
   [5] CHECK POINTS OF EVERY 150 HOURS G-15
   [6] CHECK POINTS OF EVERY 200 HOURS G-17
   [7] CHECK POINTS OF EVERY 400 HOURS G-21
   [8] CHECK POINTS OF EVERY 500 HOURS G-23
   [9] CHECK POINTS OF EVERY 1 OR 2 MONTHS G-25
   [10]CHECK POINTS OF EVERY YEAR G-26
   [11]CHECK POINTS OF EVERY 800 HOURS G-27
   [12]CHECK POINTS OF EVERY 1500 HOURS G-28
   [13]CHECK POINTS OF EVERY 3000 HOURS G-31
   [14]CHECK POINTS OF EVERY 2 YEARS G-34
5. SPECIAL TOOLS G-38

https://truckmanualshub.com/

1. ENGINE IDENTIFICATION

[1] MODEL NAME AND ENGINE SERIAL NUMBER

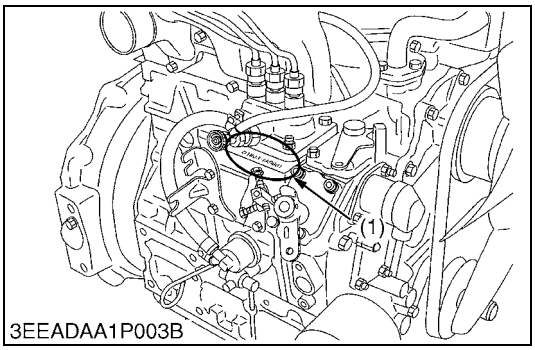

When contacting the manufacture, always specify your engine model name and serial number.

The engine model and its serial number need to be identified before the engine can be serviced or parts replaced.

■ **Engine Serial Number**

The engine serial number is an identified number for the engine. It is marked after the engine model number.

It indicates month and year of manufacture as follows.

- **Year of manufacture**

Alphabet or Number	Year	Alphabet or Number	Year
1	2001	F	2015
2	2002	G	2016
3	2003	H	2017
4	2004	J	2018
5	2005	K	2019
6	2006	L	2020
7	2007	M	2021
8	2008	N	2022
9	2009	P	2023
A	2010	R	2024
B	2011	S	2025
C	2012	T	2026
D	2013	V	2027
E	2014		

(1) Engine Model Name and Serial Number

W1010477

https://truckmanualshub.com/

- **Month of manufacture**

Month	Engine Lot Number	
January	A0001 ~ A9999	B0001 ~ BZ999
February	C0001 ~ C9999	D0001 ~ DZ999
March	E0001 ~ E9999	F0001 ~ FZ999
April	G0001 ~ G9999	H0001 ~ HZ999
May	J0001 ~ J9999	K0001 ~ KZ999
June	L0001 ~ L9999	M0001 ~ MZ999
July	N0001 ~ N9999	P0001 ~ PZ999
August	Q0001 ~ Q9999	R0001 ~ RZ999
September	S0001 ~ S9999	T0001 ~ TZ999
October	U0001 ~ U9999	V0001 ~ VZ999
November	W0001 ~ W9999	X0001 ~ XZ999
December	Y0001 ~ Y9999	Z0001 ~ ZZ999

* Alphabetical letters "**I**" and "**O**" are not used.

e.g. D1803 - 7 B A001
(a) (b)(c) (d)

(a) Engine Model Name : **D1803**
(b) Year : **7** indicates **2007**
(c) Month : **A** or **B** indicates **January**
(d) Lot number : (**0001 ~ 9999** or **A001 ~ Z999**)

W1011076

https://truckmanualshub.com/

[2] E3B ENGINE

[Example : Engine Model Name D1803-M-**E3B**-XXXX or D1803-M-DI-**E3B**-XXXX]

The emission controls previously implemented in various countries to prevent air pollution will be stepped up as Non-Road Emission Standards continue to change. The timing or applicable date of the specific Non-Road Emission regulations depends on the engine output classification.

Over the past several years, Kubota has been supplying diesel engines that comply with regulations in the respective countries affected by Non-Road Emission regulations. For Kubota Engines, E3B will be the designation that identifies engine models affected by the next emission phase (See the table below).

When servicing or repairing ###-E3B series engines, use only replacement parts for that specific E3B engine, designated by the appropriate E3B Kubota Parts List and perform all maintenance services listed in the appropriate Kubota Operator's Manual or in the appropriate E3B Kubota Workshop Manual. Use of incorrect replacement parts or replacement parts from other emission level engines (for example: E2B engines), may result in emission levels out of compliance with the original E3B design and EPA or other applicable regulations.Please refer to the emission label located on the engine head cover to identify Output classification and Emission Control Information. E3B engines are identified with "ET" at the end of the Model designation, on the US EPA label. Please note : E3B is not marked on the engine.

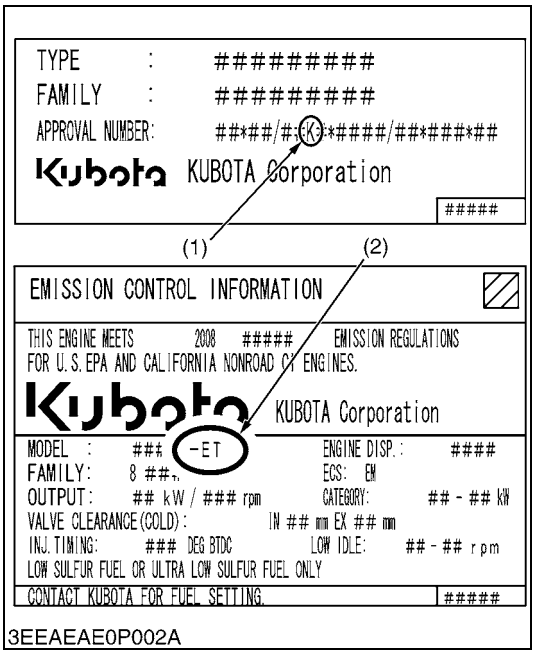

3EEAEAE0P002A

Category (1)	Engine output classification	EU regulation
K	From 19 to less than 37 kW	STAGE IIIA
J	From 37 to less than 75 kW	STAGE IIIA
I	From 75 to less than 130 kW	STAGE IIIA

Category (2)	Engine output classification	EPA regulation
ET	Less than 19kW	Tier 4
	From 19 to less than 56 kW	Interim Tier 4
	From 56 to less than 75 kW	Tier 3
	From 75 to less than 130 kW	Tier 3

(1) EU regulation engine output classification category
(2) “E3B” engines are identified with “ET” at the end of the Model designation, on the US EPA label.
“E3B” designates Tier 3 and some Interim Tier 4 / Tier 4 models, depending on engine output classification.

W1031971

[3] CYLINDER NUMBER

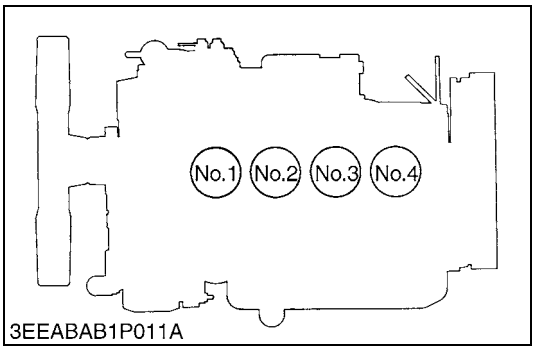

3EEABAB1P011A

The cylinder numbers of KUBOTA diesel engine are designated as shown in the figure.

The sequence of cylinder numbers is given as No.1, No.2, No.3 and No.4 starting from the gear case side.

W1011077

https://truckmanualshub.com/

2. GENERAL PRECAUTIONS

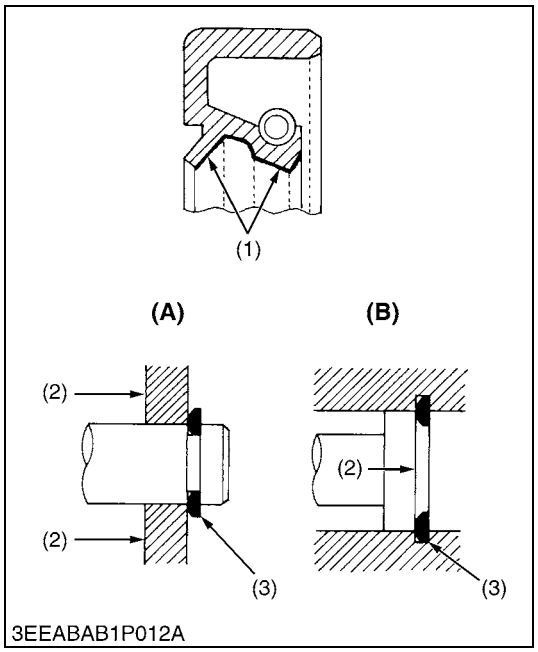

- During disassembly, carefully arrange removed parts in a clean area to prevent confusion later. Screws, bolts and nuts should be replaced in their original position to prevent reassembly errors.
- When special tools are required, use KUBOTA genuine special tools. Special tools which are not frequently used should be made according to the drawings provided.
- Before disassembling or servicing live wires, make sure to always disconnect the grounding cable from the battery first.
- Remove oil and dirt from parts before measuring.
- Use only KUBOTA genuine parts for parts replacement to maintain engine performance and to ensure safety.
- Gaskets and O-rings must be replaced during reassembly. Apply grease to new O-rings or oil seals before assembling.
- When reassembling external or internal snap rings, position them so that the sharp edge faces against the direction from which force is applied.
- Be sure to perform run-in the serviced or reassembled engine. Do not attempt to give heavy load at once, or serious damage may result to the engine.

(1) Grease
(2) Force
(3) Place the Sharp Edge against the Direction of Force

(A) External Snap Ring
(B) Internal Snap Ring

W1011734

https://truckmanualshub.com/

3. MAINTENANCE CHECK LIST

To maintain long-lasting and safe engine performance, make it a rule to carry out regular inspections by following the table below.

[D1503-M, D1703-M, D1803-M, V2003-M, V2203-M, V2403-M, V2403-M-T]
[D1703-M-BG, V2003-M-BG, V2003-M-T-BG, V2203-M-BG, V2403-M-BG]

Item		Service Interval											
		Every											
		50 hrs	100 hrs	150 hrs	200 hrs	400 hrs	500 hrs	1 or 2 months	1 year	800 hrs	1500 hrs	3000 hrs	2 years
* Checking fuel hoses and clamp bands		☆											
Changing engine oil (depending on the oil pan)	(1) Oil pan depth (90 mm, 3.5 in.)	★		☆									
	(2) Oil pan depth (124 mm, 4.88 in.)	★			☆								
*Cleaning air cleaner element (replace the element after 6-times cleanings)			☆										
*Cleaning fuel filter (Element type)			☆										
Checking battery electrolyte level			☆										
Checking fan belt tension and damage			☆										
Replacing oil filter cartridge	(1) Oil pan depth (90 mm, 3.5 in.)	★		☆									
	(2) Oil pan depth (124 mm, 4.88 in.)	★			☆								
Checking radiator hoses and clamp bands					☆								
* Checking intake air line					☆								
Replacing fuel filter cartridge						☆							
Cleaning water jacket and radiator interior							☆						
Replacing fan belt							☆						
Recharging battery								☆					
* Replacing air cleaner element									☆				
Checking valve clearance										☆			
* Checking injection nozzle condition											☆		
* Checking turbocharger												☆	
* Checking injection pump												☆	
* Replacing intake air line													☆
Replacing battery													☆
Replacing radiator hoses and clamp bands													☆
* Replacing fuel hoses and clamps													☆
Changing radiator coolant (L.L.C.)													☆

★ Change engine oil and replace oil filter cartridge after the first 50 hours of operation.

* The items listed above (* marked) are registered as emission related critical parts by KUBOTA in the U.S. EPA nonroad emission regulation. As the engine owner, you are responsible for the performance of the required maintenance on the engine according to the above instruction.

W1029462

https://truckmanualshub.com/

[D1803-M-DI, V2403-M-DI, V2403-M-DI-T]

Item		Service Interval										
		Every										
		50 hrs	100 hrs	200 hrs	400 hrs	500 hrs	1 or 2 months	1 year	800 hrs	1500 hrs	3000 hrs	2 years
* Checking fuel hoses and clamp bands		☆										
Changing engine oil (depending on the oil pan)	(1) Oil pan depth (90 mm, 3.5 in.)	★		☆								
	(2) Oil pan depth (124 mm, 4.88 in.)	★			☆							
*Cleaning air cleaner element (replace the element after 6-times cleanings)			☆									
*Cleaning fuel filter (Element type)			☆									
Checking battery electrolyte level			☆									
Checking fan belt tension and damage			☆									
Replacing oil filter cartridge	(1) Oil pan depth (90 mm, 3.5 in.)	★		☆								
	(2) Oil pan depth (124 mm, 4.88 in.)	★			☆							
Checking radiator hoses and clamp bands				☆								
* Checking intake air line				☆								
Replacing fuel filter cartridge					☆							
Cleaning water jacket and radiator interior						☆						
Replacing fan belt						☆						
Recharging battery							☆					
* Replacing air cleaner element								☆				
Checking valve clearance									☆			
* Checking injection nozzle condition										☆		
* Checking turbocharger											☆	
* Checking injection pump											☆	
* Replacing intake air line												☆
Replacing battery												☆
Replacing radiator hoses and clamp bands												☆
* Replacing fuel hoses and clamps												☆
Changing radiator coolant (L.L.C.)												☆

★ Change engine oil and replace oil filter cartridge after the first 50 hours of operation.

* The items listed above (* marked) are registered as emission related critical parts by KUBOTA in the U.S. EPA nonroad emission regulation. As the engine owner, you are responsible for the performance of the required maintenance on the engine according to the above instruction.

W1032664

https://truckmanualshub.com/

CAUTION

- **When changing or inspecting, be sure to level and stop the engine.**

■ **NOTE**

Engine Oil :

- **Refer to the following table for the suitable American Petroleum Institute (API) classification of engine oil according to the engine type (with internal EGR, external EGR or non-EGR) and the Fuel Type Used : (Low Sulfur, Ultra Low Sulfur or High Sulfur Fuels).**

Fuel Type	Engine oil classification (API classification)	
	Engines with non-EGR Engines with internal EGR	Engines with external EGR
High Sulfur Fuel [0.05 % (500 ppm) ≤ Sulfur Content < 0.50 % (5000 ppm)]	**CF** (If the "CF-4, CG-4, CH-4, or CI-4" engine oil is used with a high-sulfur fuel, change the engine oil at shorter intervals. (approximately half))	–
Low Sulfur Fuel [Sulfur Content < 0.05 % (500 ppm)] or Ultra Low Sulfur Fuel [Sulfur Content < 0.0015 % (15 ppm)]	**CF, CF-4, CG-4, CH-4** or **CI-4**	**CF** or **CI-4** (Class CF-4, CG-4 and CH-4 engine oils cannot be used on EGR type engines.)

EGR : Exhaust Gas Re-circulation

W1024941

- **CJ-4 classification oil is intended for use in engines equipped with DPF (Diesel Particulate Filter) and is Not Recommended for use in Kubota E3 specification engines.**
- **Oil used in the engine should have API classification and Proper SAE Engine Oil Viscosity according to the ambient temperatures where the engine is operated.**
- **With strict emission control regulations now in effect, the CF-4 and CG-4 engine oils have been developed for use with low sulfur fuels, for On-Highway vehicle engines. When a Non-Road engine runs on high sulfur fuel, it is advisable to use a "CF or better" classification engine oil with a high Total Base Number (a minimum TBN of 10 is recommended).**

Fuel :

- **Cetane Rating : The minimum recommended Fuel Cetane Rating is 45. A cetane rating greater than 50 is preferred, especially for ambient temperatures below –20 °C (–4 °F) or elevations above 1500 m (5000 ft).**
- **Diesel Fuel Specification Type and Sulfur Content % (ppm) used, must be compliant with all applicable emission regulations for the area in which the engine is operated.**
- **Use of diesel fuel with sulfur content less than 0.10 % (1000 ppm) is strongly recommended.**
- **If high-sulfur fuel (sulfur content 0.50 % (5000 ppm) to 1.0 % (10000 ppm)) is used as a diesel fuel, change the engine oil and oil filter at shorter intervals. (approximately half)**
- **DO NOT USE Fuels that have sulfur content greater than 1.0 % (10000 ppm).**
- **Diesel fuels specified to EN 590 or ASTM D975 are recommended.**
- **No.2-D is a distillate fuel of lower volatility for engines in industrial and heavy mobile service. (SAE J313 JUN87)**
- **Since KUBOTA diesel engines of less than 56 kW (75 hp) utilize EPA Tier 4 and Interim Tier 4 standards, the use of low sulfur fuel or ultra low sulfur fuel is mandatory for these engines, when operated in US EPA regulated areas. Therefore, please use No.2-D S500 or S15 diesel fuel as an alternative to No.2-D, and use No.1-D S500 or S15 diesel fuel as an alternative to No.1-D for ambient temperatures below –10 °C (14 °F).**

1) SAE : Society of Automotive Engineers
2) EN : European Norm
3) ASTM : American Society of Testing and Materials
4) US EPA : United States Environmental Protection Agency
5) No.1-D or No.2-D, S500 : Low Sulfur Diesel (LSD) less than 500 ppm or 0.05 wt.%
No.1-D or No.2-D, S15 : Ultra Low Sulfur Diesel (ULSD) 15 ppm or 0.0015 wt.%

https://truckmanualshub.com/

4. CHECK AND MAINTENANCE

[1] DAILY CHECK POINTS

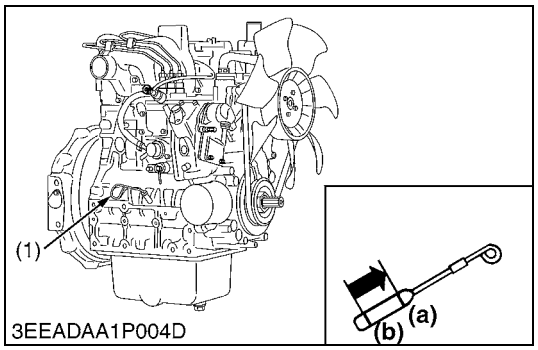

Checking Engine Oil Level

1. Level the engine.
2. To check the oil level, draw out the dipstick (1), wipe it clean, reinsert it, and draw it out again.
   Check to see that the oil level lies between the two notches.
3. If the level is too low, add new oil to the specified level.

■ **IMPORTANT**

- **When using an oil of different maker or viscosity from the previous, drain old oil. Never mix two different types of oil.**

■ **NOTE**

- **Be sure to inspect the engine, locating it on a horizontal place. If placed on gradients, accurately, oil quantity may not be measured.**
- **Be sure to keep the oil level between upper and lower limits of the dipstick. Too much oil may cause a drop in output or excessive blow-by gas. On the closed breather type engine in which mist is sucked through port, too much oil may caused oil hammer. While too little oil, may seize the engine's rotating and sliding parts.**

(1) Dipstick

(a) Maximum
(b) Minimum

W1016222

https://truckmanualshub.com/

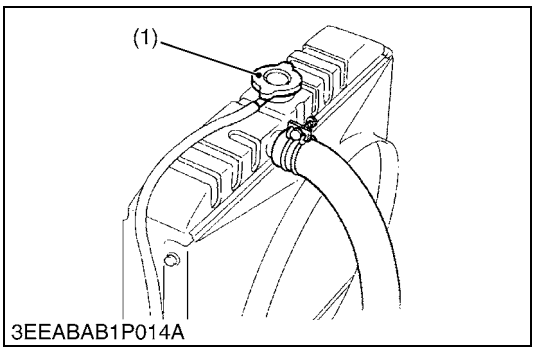

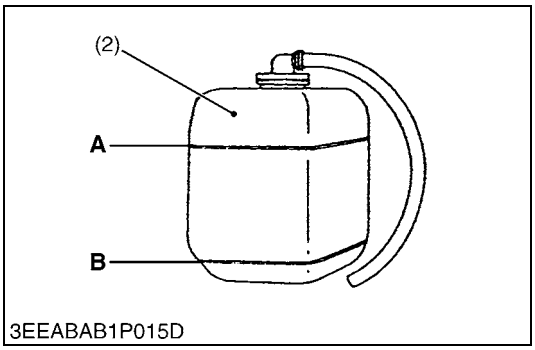

Checking and Replenish Coolant

1. Without recovery tank :
   Remove the radiator cap (1) and check to see that the coolant level is just below the port.
   With recovery tank (2) :
   Check to see that the coolant level lies between **FULL** (**A**) and **LOW** (**B**).
2. If coolant level is too low, check the reason for decreasing coolant.
   (Case 1)
   If coolant is decreasing by evaporation, replenish only fresh, soft water.
   (Case 2)
   If coolant is decreasing by leak, replenish coolant of the same manufacture and type in the specified mixture ratio (fresh, soft water and L.L.C.). If the coolant brand cannot be identified, drain out all of the remaining coolant and refill with a totally new brand of coolant mix.

CAUTION

- **Do not remove the radiator cap until coolant temperature is below its boiling point. Then loosen the cap slightly to relieve any excess pressure before removing the cap completely.**

IMPORTANT

- **During filling the coolant, air must be vented from the engine coolant passages. The air vents by jiggling the radiator upper and lower hoses.**
- **Be sure to close the radiator cap securely. If the cap is loose or improperly closed, coolant may leak out and the engine could overheat.**
- **Do not use an antifreeze and scale inhibitor at the same time.**
- **Never mix the different type or brand of L.L.C..**

(1) Radiator Cap — **A : FULL**
(2) Recovery Tank — **B : LOW**

W1035779

https://truckmanualshub.com/

[2] CHECK POINTS OF INITIAL 50 HOURS

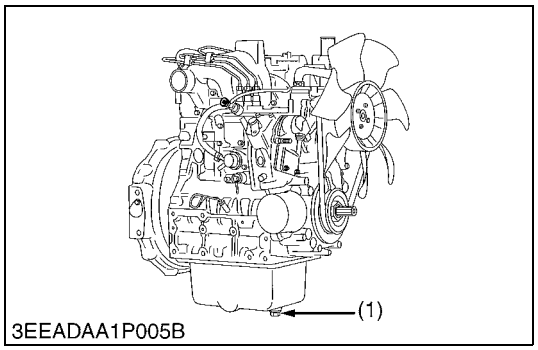

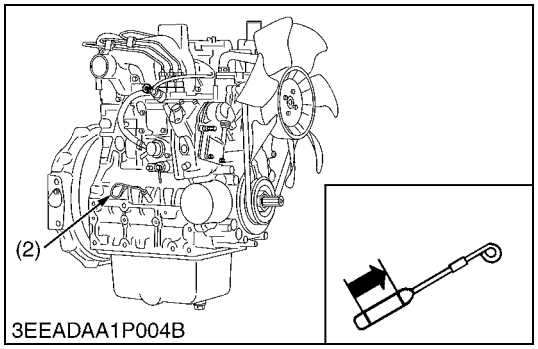

Changing Engine Oil

CAUTION

- **Be sure to stop engine before changing engine oil.**

1. Start and warm up the engine for approx. 5 minutes.
2. Place an oil pan underneath the engine.
3. To drain the used oil, remove the drain plug (1) at the bottom of the engine and drain the oil completely.
4. Screw the drain plug (1).
5. Fill new oil up to upper line on the dipstick (2).

■ **IMPORTANT**

- **When using an oil of different maker or viscosity from the previous one, remove all of the old oil.**
- **Never mix two different types of oil.**
- **Engine oil should have properties of API classification CF (See page G-7).**
- **Use the proper SAE Engine Oil according to ambient temperature.**

Above 25 °C (77 °F)	SAE 30 or SAE 10W-30 SAE 10W-40
0 °C to 25 °C (32 °F to 77 °F)	SAE 20 or SAE 10W-30 SAE 10W-40
Below 0 °C (32 °F)	SAE 10W or SAE 10W-30 SAE 10W-40

Models	Oil pan depth	
	124 mm (4.88 in.)	*90 mm (3.5 in.)
D1503-M, D1703-M D1803-M, D1803-M-DI D1703-M-BG	7.0 L 1.8 U.S.gals	5.6 L 1.5 U.S.gals
V2003-M, V2203-M V2403-M, V2403-M-DI, V2403-M-DI-T V2003-M-BG, V2003-M-T-BG V2203-M-BG, V2403-M-BG	9.5 L 2.5 U.S.gals	7.6 L 2.0 U.S.gals
V2403-M-T	9.5 L 2.5 U.S.gals	–

*90 mm (3.5 in.) oil pan depth is optional.

(1) Drain Plug (2) Dipstick

W1016604

https://truckmanualshub.com/

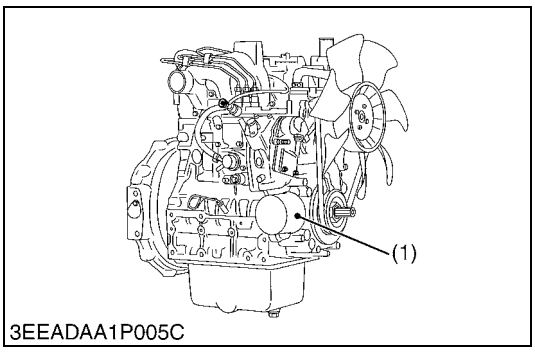

Replacing Oil Filter Cartridge

CAUTION

- **Be sure to stop the engine before replacing filter cartridge.**

1. Remove the oil filter cartridge (1) with the filter wrench.
2. Apply a slight coat of oil onto the new cartridge gasket.
3. To install the new cartridge, screw it in by hand. Over tightening may cause deformation of rubber gasket.
4. After the new cartridge has been replaced, the engine oil normally decrease a little. Thus see that the engine oil does not leak through the seal and be sure to read the oil level on the dipstick. Then, replenish the engine oil up to the specified level.

IMPORTANT

- **To prevent serious damage to the engine, replacement element must be highly efficient. Use only a KUBOTA genuine filter or its equivalent.**

(1) Engine Oil Filter Cartridge

W1013487

https://truckmanualshub.com/

[3] CHECK POINTS OF EVERY 50 HOURS

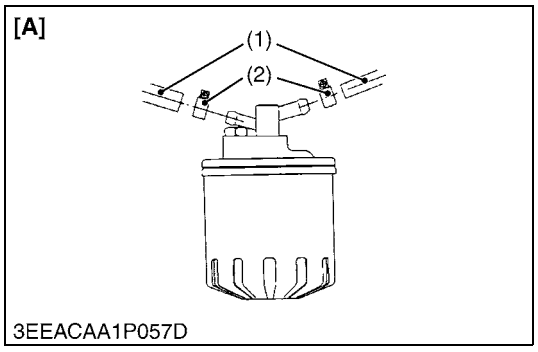

3EEACAA1P057D

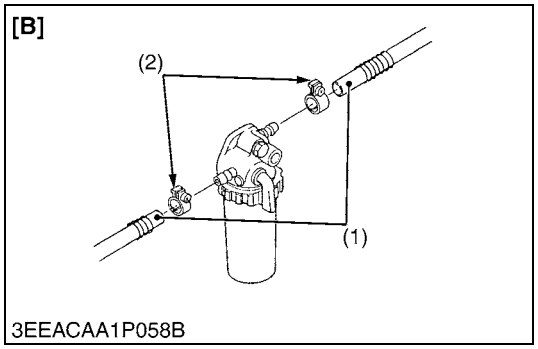

3EEACAA1P058B

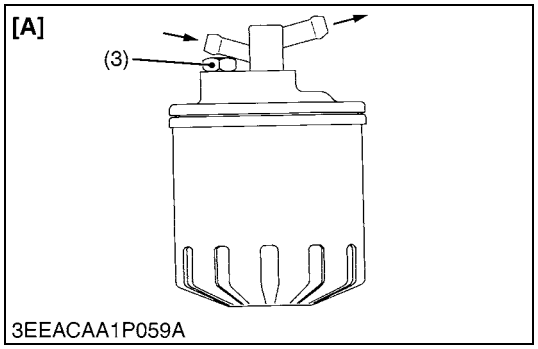

3EEACAA1P059A

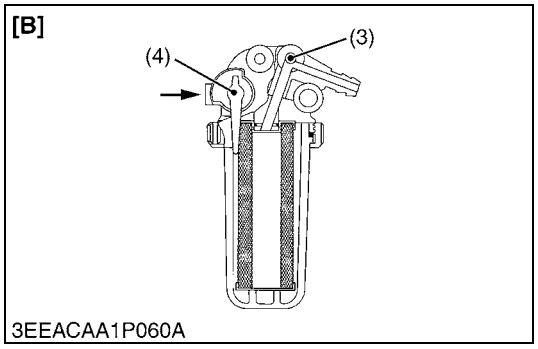

3EEACAA1P060A

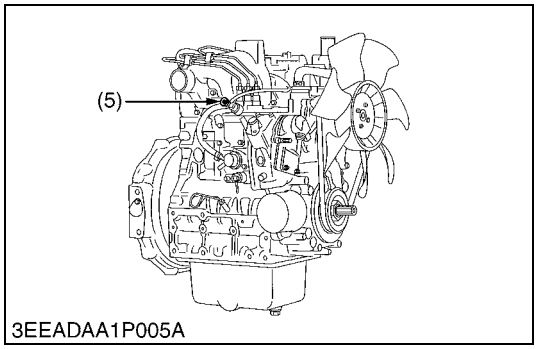

3EEADAA1P005A

Checking Fuel Hoses and Clamp Bands

1. If the clamp (2) is loose, apply oil to the threads and securely retighten it.
2. The fuel hose (1) is made of rubber and ages regardless of the period service.
   Change the fuel hose together with the clamp every two years.
3. However, if the fuel hose and clamp are found to be damaged or deteriorate earlier than two years, then change or remedy.
4. After the fuel hose and the clamp have been changed, bleed the fuel system.

CAUTION

- **Stop the engine when attempting the check and change prescribed above.**

(When bleeding fuel system)

1. Fill the tank with fuel and open the fuel cock (4). (**[B]** only.)
2. Loosen the air vent plug (3) of the fuel filter a few turns.
3. Screw back the plug when bubbles do not come up any more.
4. Open the air vent cock (5) on top of the fuel injection pump.
5. If equipped electrical fuel feed pump, turn the key to **AC** position and pump the fuel up for 10 to 15 seconds.
   If equipped mechanical fuel feed pump, set the stop lever on stop position and crank the engine for 10 to 15 seconds.
6. Close securely the air vent cock after air bleeding.

■ **NOTE**

- **Always keep the air vent cock on the fuel injection pump closed except when air is vented, or it may cause the engine to stop.**

(1) Fuel Hose
(2) Clamp
(3) Air Vent Plug
(4) Fuel Cock
(5) Air Vent Cock

[A] Cartridge Type
[B] Element Type

W1035921

https://truckmanualshub.com/

[4] CHECK POINTS OF EVERY 100 HOURS

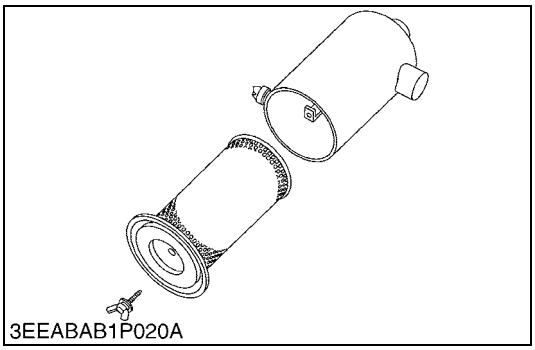
3EEABAB1P020A

Cleaning Air Cleaner Element

1. Remove the air cleaner element.
2. Use clean dry compressed air on the inside of the element. Pressure of compressed air must be under 210 kPa (2.1 kgf/cm^2, 30 psi).
   Maintain reasonable distance between the nozzle and the filter.

■ **NOTE**
- **The air cleaner uses a dry element. Never apply oil to it.**
- **Do not run the engine with filter element removed.**
- **Change the element once a year or every 6th cleaning.**

W1045746

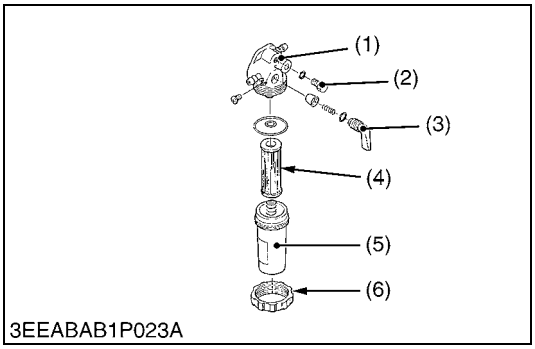

3EEABAB1P023A

Cleaning Fuel Filter (Element Type only)

1. Close the fuel cock (3).
2. Unscrew the retaining ring (6) and remove the filter cup (5), and rinse the inside with kerosene.
3. Take out the element (4) and dip it in the kerosene to rinse.
4. After cleaning, reassemble the fuel filter, keeping out dust and dirt.
5. Bleed the fuel system.

■ **IMPORTANT**
- **If dust and dirt enter the fuel, the fuel injection pump and injection nozzle will wear quickly. To prevent this, be sure to clean the fuel filter cup (5) periodically.**

(1) Cock Body
(2) Air Vent Plug
(3) Fuel Cock
(4) Filter Element
(5) Filter Cup
(6) Retaining Ring

W1046058

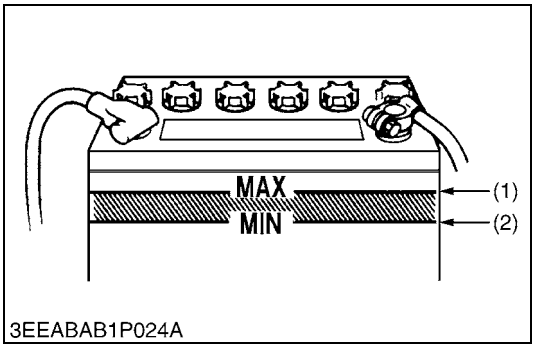

3EEABAB1P024A

Checking Battery Electrolyte Level

1. Check the battery electrolyte level.
2. If the level is below than lower level line (2), and the distilled water to pour level of each cell.

(1) Upper Level Line
(2) Lower Level Line

W1047154

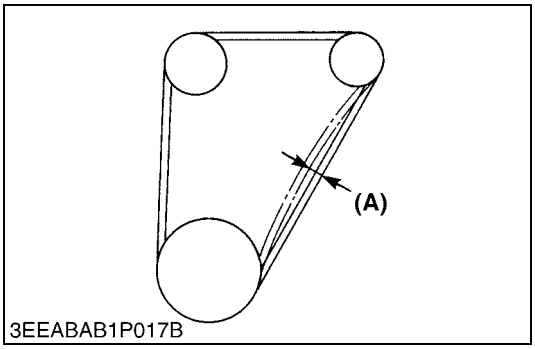

3EEABAB1P017B

Fan Belt Tension

1. Measure the deflection **(A)**, depressing the belt halfway between the fan drive pulley and alternator pulley at specified force 98 N (10 kgf, 22 lbf).
2. If the measurement is not within the factory specifications, loosen the alternator mounting screws and relocate the alternator to adjust.

Deflection **(A)**	Factory spec.	7.0 to 9.0 mm 0.28 to 0.35 in.

(A) Deflection

W1208957

https://truckmanualshub.com/

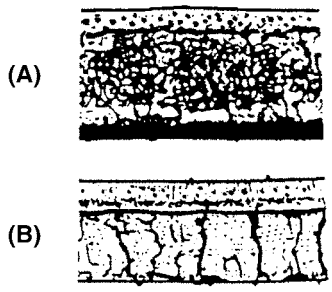

3EEABAB1P019B

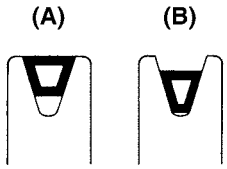

3EEABAB1P018A

Fan Belt Damage and Wear

1. Check the fan belt for damage.
2. If the fan belt is damaged, replace it.
3. Check if the fan belt is worn and sunk in the pulley groove.
4. If the fan belt is nearly worn out and deeply sunk in the pulley groove, replace it.

(A) Good **(B) Bad**

W1057475

https://truckmanualshub.com/

[5] CHECK POINTS OF EVERY 150 HOURS

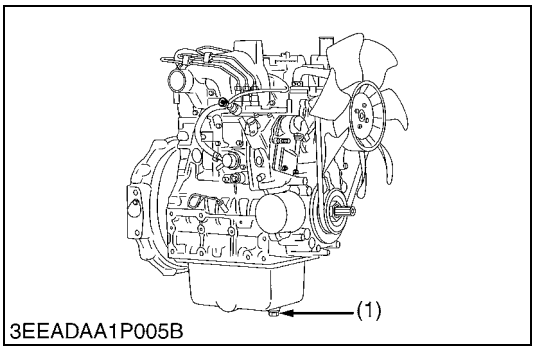

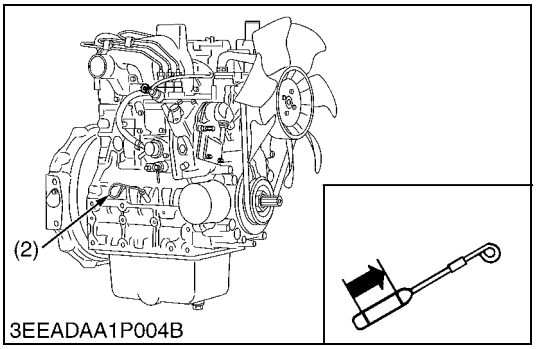

Changing Engine Oil (for 90 mm (3.5 in.) Depth Oil Pan)

[D1503-M, D1703-M, D1803-M, V2003-M, V2203-M, V2403-M] [D1703-M-BG, V2003-M-BG, V2003-M-T-BG, V2203-M-BG, V2403-M-BG]

CAUTION

- **Be sure to stop engine before changing engine oil.**

1. Start and warm up the engine for approx. 5 minutes.
2. Place an oil pan underneath the engine.
3. To drain the used oil, remove the drain plug (1) at the bottom of the engine and drain the oil completely.
4. Screw the drain plug (1).
5. Fill new oil up to upper line on the dipstick (2).

■ **IMPORTANT**

- **When using an oil of different maker or viscosity from the previous one, remove all of the old oil.**
- **Never mix two different types of oil.**
- **Engine oil should have properties of API classification CF (See page G-7).**
- **Use the proper SAE Engine Oil according to ambient temperature.**

Above 25 °C (77 °F)	SAE 30 or SAE 10W-30 SAE 10W-40
0 °C to 25 °C (32 °F to 77 °F)	SAE 20 or SAE 10W-30 SAE 10W-40
Below 0 °C (32 °F)	SAE 10W or SAE 10W-30 SAE 10W-40

Models	Oil pan depth	
	124 mm (4.88 in.)	*90 mm (3.5 in.)
D1503-M D1703-M D1803-M D1703-M-BG	7.0 L 1.8 U.S.gals	5.6 L 1.5 U.S.gals
V2003-M V2203-M V2403-M V2003-M-BG V2003-M-T-BG V2203-M-BG V2403-M-BG	9.5 L 2.5 U.S.gals	7.6 L 2.0 U.S.gals

*90 mm (3.5 in.) oil pan depth is optional.

(1) Drain Plug (2) Dipstick

W1022029

https://truckmanualshub.com/

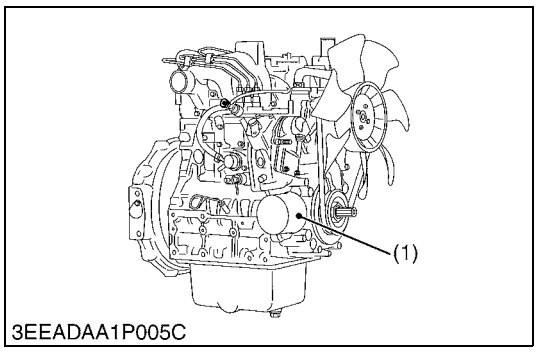

Replacing Oil Filter Cartridge (for 90 mm (3.5 in.) Depth Oil Pan)

[D1503-M, D1703-M, D1803-M, V2003-M, V2203-M, V2403-M]
[D1703-M-BG, V2003-M-BG, V2003-M-T-BG, V2203-M-BG, V2403-M-BG]

CAUTION

- **Be sure to stop the engine before replacing filter cartridge.**

1. Remove the oil filter cartridge (1) with the filter wrench.
2. Apply a slight coat of oil onto the new cartridge gasket.
3. To install the new cartridge, screw it in by hand. Over tightening may cause deformation of rubber gasket.
4. After the new cartridge has been replaced, the engine oil normally decrease a little. Thus see that the engine oil does not leak through the seal and be sure to read the oil level on the dipstick. Then, replenish the engine oil up to the specified level.

IMPORTANT

- **To prevent serious damage to the engine, replacement element must be highly efficient. Use only a KUBOTA genuine filter or its equivalent.**

(1) Engine Oil Filter Cartridge

W1022423

https://truckmanualshub.com/

[6] CHECK POINTS OF EVERY 200 HOURS

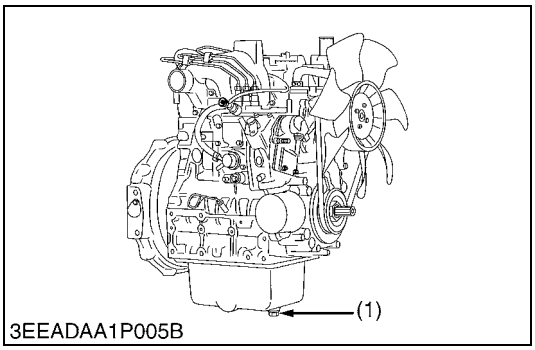

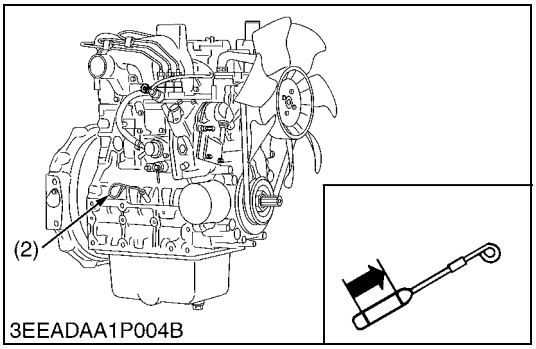

Changing Engine Oil (for 124 mm (4.88 in.) Depth Oil Pan)

[D1503-M, D1703-M, D1803-M, V2003-M, V2203-M, V2403-M, V2403-M-T]
[D1703-M-BG, V2003-M-BG, V2003-M-T-BG, V2203-M-BG, V2403-M-BG]

CAUTION

- **Be sure to stop engine before changing engine oil.**

1. Start and warm up the engine for approx. 5 minutes.
2. Place an oil pan underneath the engine.
3. To drain the used oil, remove the drain plug (1) at the bottom of the engine and drain the oil completely.
4. Screw the drain plug (1).
5. Fill new oil up to upper line on the dipstick (2).

IMPORTANT

- **When using an oil of different maker or viscosity from the previous one, remove all of the old oil.**
- **Never mix two different types of oil.**
- **Engine oil should have properties of API classification CF (See page G-7).**
- **Use the proper SAE Engine Oil according to ambient temperature.**

Above 25 °C (77 °F)	SAE 30 or SAE 10W-30 SAE 10W-40
0 °C to 25 °C (32 °F to 77 °F)	SAE 20 or SAE 10W-30 SAE 10W-40
Below 0 °C (32 °F)	SAE 10W or SAE 10W-30 SAE 10W-40

Models	Oil pan depth	
	124 mm (4.88 in.)	*90 mm (3.5 in.)
D1503-M D1703-M D1803-M D1703-M-BG	7.0 L 1.8 U.S.gals	5.6 L 1.5 U.S.gals
V2003-M V2203-M V2403-M V2003-M-BG V2003-M-T-BG V2203-M-BG V2403-M-BG	9.5 L 2.5 U.S.gals	7.6 L 2.0 U.S.gals
V2403-M-T	9.5 L 2.5 U.S.gals	–

*90 mm (3.5 in.) oil pan depth is optional.

(1) Drain Plug (2) Dipstick

W1022765

https://truckmanualshub.com/

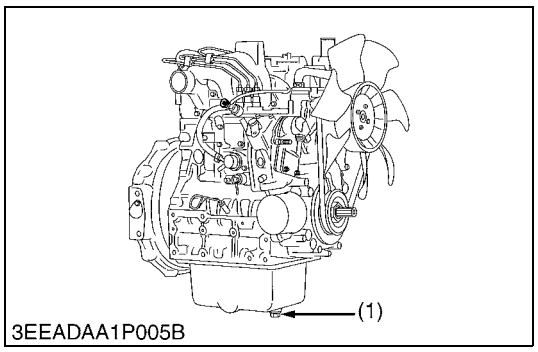

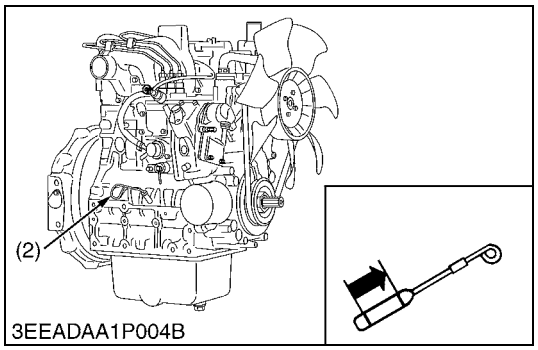

Changing Engine Oil (for 90 mm (3.5 in.) Depth Oil Pan) [D1803-M-DI, V2403-M-DI, V2403-M-DI-T]

CAUTION

- **Be sure to stop engine before changing engine oil.**

1. Start and warm up the engine for approx. 5 minutes.
2. Place an oil pan underneath the engine.
3. To drain the used oil, remove the drain plug (1) at the bottom of the engine and drain the oil completely.
4. Screw the drain plug (1).
5. Fill new oil up to upper line on the dipstick (2).

IMPORTANT

- **When using an oil of different maker or viscosity from the previous one, remove all of the old oil.**
- **Never mix two different types of oil.**
- **Engine oil should have properties of API classification CF (See page G-7).**
- **Use the proper SAE Engine Oil according to ambient temperature.**

Above 25 °C (77 °F)	SAE 30 or SAE 10W-30 SAE 10W-40
0 °C to 25 °C (32 °F to 77 °F)	SAE 20 or SAE 10W-30 SAE 10W-40
Below 0 °C (32 °F)	SAE 10W or SAE 10W-30 SAE 10W-40

Models	Oil pan depth	
	124 mm (4.88 in.)	*90 mm (3.5 in.)
D1803-M-DI	7.0 L 1.8 U.S.gals	5.6 L 1.5 U.S.gals
V2403-M-DI V2403-M-DI-T	9.5 L 2.5 U.S.gals	7.6 L 2.0 U.S.gals

*90 mm (3.5 in.) oil pan depth is optional.

(1) Drain Plug (2) Dipstick

W1034539

https://truckmanualshub.com/

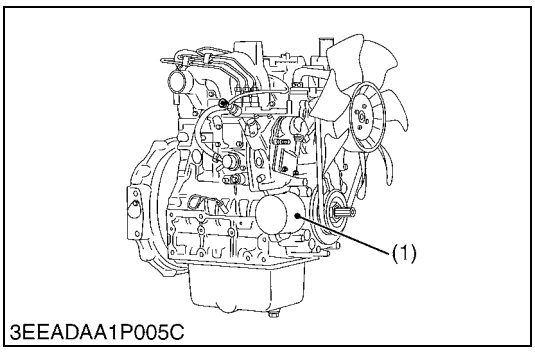

Replacing Oil Filter Cartridge (for 124 mm (4.88 in.) Depth Oil Pan)

[D1503-M, D1703-M, D1803-M, V2003-M, V2203-M, V2403-M, V2403-M-T]
[D1703-M-BG, V2003-M-BG, V2003-M-T-BG, V2203-M-BG, V2403-M-BG]

CAUTION

- **Be sure to stop the engine before replacing filter cartridge.**

1. Remove the oil filter cartridge (1) with the filter wrench.
2. Apply a slight coat of oil onto the new cartridge gasket.
3. To install the new cartridge, screw it in by hand. Over tightening may cause deformation of rubber gasket.
4. After the new cartridge has been replaced, the engine oil normally decrease a little. Thus see that the engine oil does not leak through the seal and be sure to read the oil level on the dipstick. Then, replenish the engine oil up to the specified level.

IMPORTANT

- **To prevent serious damage to the engine, replacement element must be highly efficient. Use only a KUBOTA genuine filter or its equivalent.**

(1) Engine Oil Filter Cartridge

W1023046

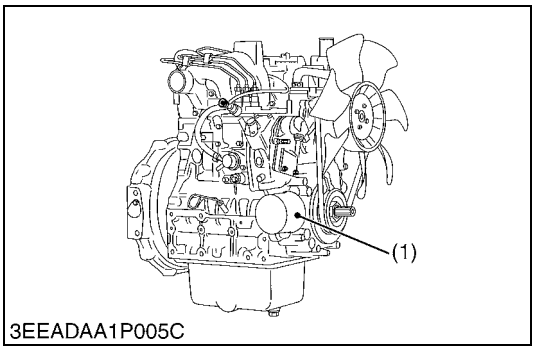

Replacing Oil Filter Cartridge (for 90 mm (3.5 in.) Depth Oil Pan)

[D1803-M-DI, V2403-M-DI, V2403-M-DI-T]

CAUTION

- **Be sure to stop the engine before replacing filter cartridge.**

1. Remove the oil filter cartridge (1) with the filter wrench.
2. Apply a slight coat of oil onto the new cartridge gasket.
3. To install the new cartridge, screw it in by hand. Over tightening may cause deformation of rubber gasket.
4. After the new cartridge has been replaced, the engine oil normally decrease a little. Thus see that the engine oil does not leak through the seal and be sure to read the oil level on the dipstick. Then, replenish the engine oil up to the specified level.

IMPORTANT

- **To prevent serious damage to the engine, replacement element must be highly efficient. Use only a KUBOTA genuine filter or its equivalent.**

(1) Engine Oil Filter Cartridge

W1035283

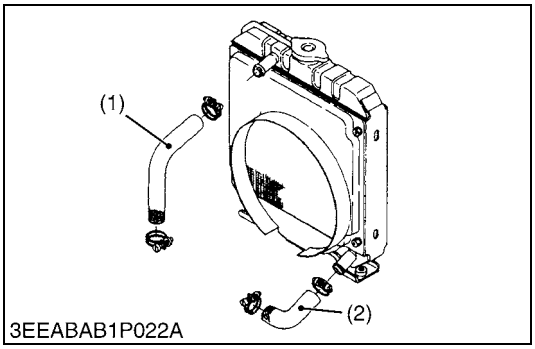

Checking Radiator Hoses and Clamp Bands

1. Check to see if the radiator hoses are properly fixed every 200 hours of operation or every six months, whichever comes first.
2. If the clamp is loose, apply oil to the threads and retighten it securely.
3. The water hose is made of rubber and tends to age. It must be replaced every two years. Also replace the clamp and tighten it securely.

(1) Upper Hose (2) Lower Hose

W1029518

https://truckmanualshub.com/

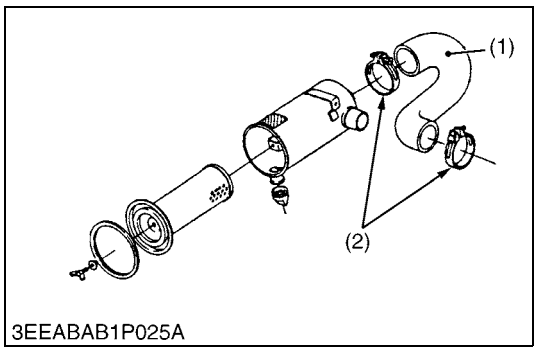

Checking Intake Air Line

1. Check to see if the intake air hose(s) are properly fixed every 200 hours of operation.
2. If the clamp is loose, apply oil to the threads and retighten it securely.
3. The intake air hose(s) is made of rubber and tends to age. It must be changed every two years. Also change the clamp and tighten it securely.

■ **IMPORTANT**

- **To prevent serious damage to the engine, keep out any dust inside the intake air line.**

(1) Intake Air Hose (2) Clamp

W1029631

https://truckmanualshub.com/

[7] CHECK POINTS OF EVERY 400 HOURS

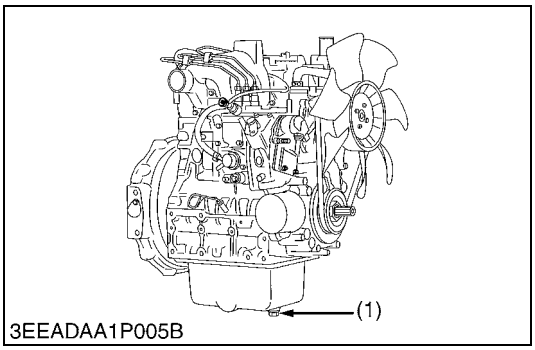

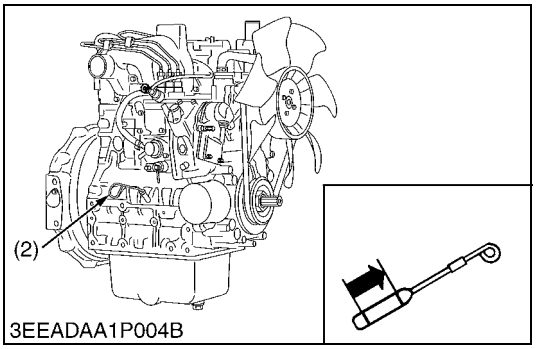

Changing Engine Oil (for 124 mm (4.88 in.) Depth Oil Pan) [D1803-M-DI, V2403-M-DI, V2403-M-DI-T]

CAUTION

- **Be sure to stop engine before changing engine oil.**

1. Start and warm up the engine for approx. 5 minutes.
2. Place an oil pan underneath the engine.
3. To drain the used oil, remove the drain plug (1) at the bottom of the engine and drain the oil completely.
4. Screw the drain plug (1).
5. Fill new oil up to upper line on the dipstick (2).

IMPORTANT

- **When using an oil of different maker or viscosity from the previous one, remove all of the old oil.**
- **Never mix two different types of oil.**
- **Engine oil should have properties of API classification CF (See page G-7).**
- **Use the proper SAE Engine Oil according to ambient temperature.**

Above 25 °C (77 °F)	SAE 30 or SAE 10W-30 SAE 10W-40
0 °C to 25 °C (32 °F to 77 °F)	SAE 20 or SAE 10W-30 SAE 10W-40
Below 0 °C (32 °F)	SAE 10W or SAE 10W-30 SAE 10W-40

Models	Oil pan depth	
	124 mm (4.88 in.)	*90 mm (3.5 in.)
D1803-M-DI	7.0 L 1.8 U.S.gals	5.6 L 1.5 U.S.gals
V2403-M-DI V2403-M-DI-T	9.5 L 2.5 U.S.gals	7.6 L 2.0 U.S.gals

*90 mm (3.5 in.) oil pan depth is optional.

(1) Drain Plug (2) Dipstick

W1035850

https://truckmanualshub.com/

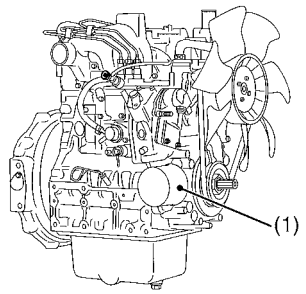

3EEADAA1P005C

Replacing Oil Filter Cartridge (for 124 mm (4.88 in.) Depth Oil Pan)

[D1803-M-DI, V2403-M-DI, V2403-M-DI-T]

CAUTION

- **Be sure to stop the engine before replacing filter cartridge.**

1. Remove the oil filter cartridge (1) with the filter wrench.
2. Apply a slight coat of oil onto the new cartridge gasket.
3. To install the new cartridge, screw it in by hand. Over tightening may cause deformation of rubber gasket.
4. After the new cartridge has been replaced, the engine oil normally decrease a little. Thus see that the engine oil does not leak through the seal and be sure to read the oil level on the dipstick. Then, replenish the engine oil up to the specified level.

■ **IMPORTANT**

- **To prevent serious damage to the engine, replacement element must be highly efficient. Use only a KUBOTA genuine filter or its equivalent.**

(1) Engine Oil Filter Cartridge

W1036519

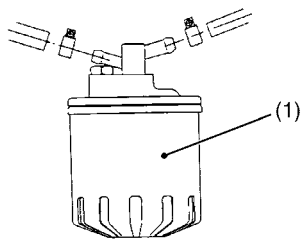

3EEACAA1P057B

Replacing Fuel Filter Cartridge (Cartridge Type)

Water and dust in fuel are collected in the filter cartridge. So, change the filter cartridge every 400 hours service.

1. Remove the used filter cartridge with filter wrench.
2. Apply a thin film of fuel to the surface of new filter cartridge gasket before screwing on.
3. Then tighten enough by hand.
4. Loosen the air vent plug to let the air out.
5. Start engine and check for fuel leakage.

(1) Fuel Filter Cartridge

W1050548

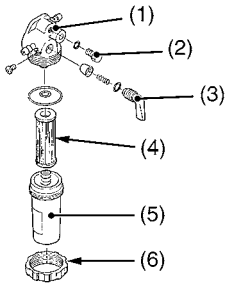

3EEABAB1P023A

Replacing Fuel Filter Element (Element Type)

1. Close the fuel cock (3).
2. Unscrew the retaining ring (6) and remove the filter cup (5), and rinse the inside with kerosene.
3. Replace the filter element (4).
4. Reassemble the fuel filter, keeping out dust and dirt.
5. Bleed the fuel system.

(1) Cock Body
(2) Air Vent Plug
(3) Fuel Cock
(4) Filter Element
(5) Filter Cup
(6) Retaining Ring

W1050583

https://truckmanualshub.com/

[8] CHECK POINTS OF EVERY 500 HOURS

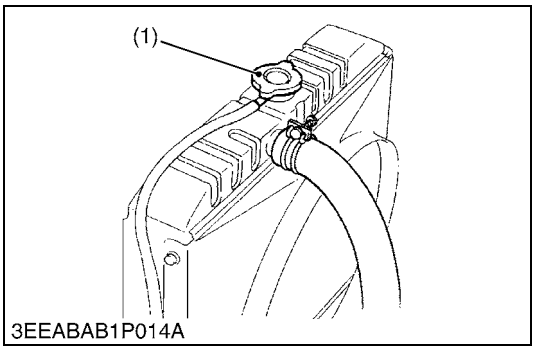

3EEABAB1P014A

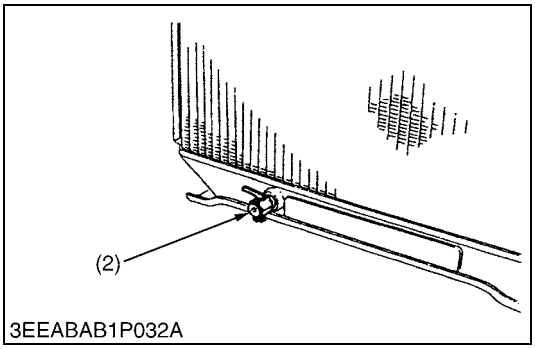

3EEABAB1P032A

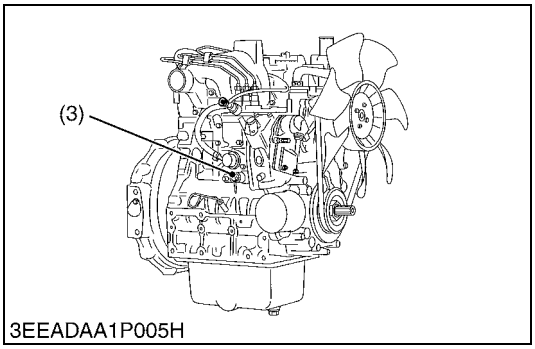

3EEADAA1P005H

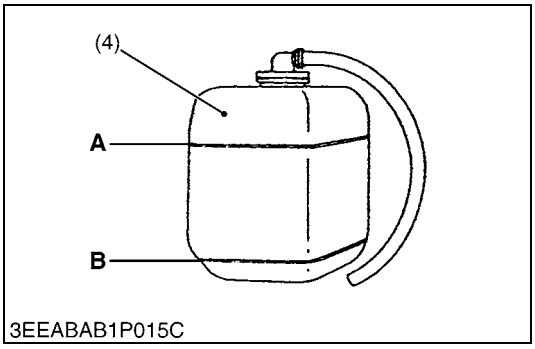

3EEABAB1P015C

Cleaning Water Jacket and Radiator Interior

CAUTION

- **Do not remove the radiator cap when the engine is hot. Then loosen cap slightly to the stop to relieve any excess pressure before removing cap completely.**

1. Stop the engine and let cool down.
2. To drain the coolant, open the radiator drain plug (2) and remove the radiator cap (1). Then radiator cap (1) must be removed to completely drain the coolant. And open the drain cock (3).
3. After all coolant is drained, close the drain plug.
4. Fill with clean water and cooling system cleaner.
5. Follow directions of the cleaner instruction.
6. After flushing, fill with clean water and anti-freeze until the coolant level is just below the port. Install the radiator cap (1) securely.
7. Fill with coolant up to “FULL” (**A**) mark on the recovery tank (4).
8. Start and operate the engine for few minutes.
9. Stop the engine and let cool. Check coolant level of radiator and recovery tank (4) and add coolant if necessary.

IMPORTANT

- **Do not start engine without coolant.**
- **Use clean, fresh, soft water and anti-freeze to fill the radiator and recovery tank.**
- **When the anti-freeze is mixed with fresh, soft water, the anti-freeze mixing ratio must be less than 50 %.**
- **Securely tighten radiator cap. If the cap is loose or improperly fitted, water may leak out and the engine could overheat.**

(1) Radiator Cap
(2) Drain Plug
(3) Drain Cock
(4) Recovery Tank

A : Full
B : Low

W1038102

https://truckmanualshub.com/

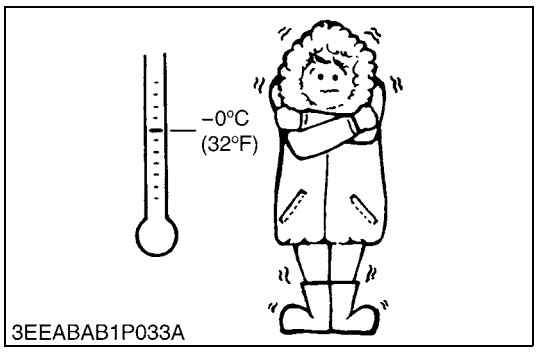

Anti-Freeze

- There are two types of anti-freeze available: use the permanent type (PT) for this engine.
- Before adding anti-freeze for the first time, clean the radiator interior by pouring fresh, soft water and draining it a few times.
- The procedure for mixing water and anti-freeze differs according to the make of the anti-freeze and the ambient temperature. Basically, it should be referred to SAE J1034 standard, more specifically also to SAE J814c.
- Mix the anti-freeze with fresh, soft water, and then fill into the radiator.

■ **IMPORTANT**

- **When the anti-freeze is mixed with fresh, soft water, the anti-freeze mixing ratio must be less than 50 %.**

Vol % anti-freeze	Freezing point		Boiling point*	
	°C	°F	°C	°F
40	–24	–11	106	223
50	–37	–35	108	226

* At 1.01 × 100000 Pa (760 mmHg) pressure (atmospheric). A higher boiling point is obtained by using a radiator pressure cap which permits the development of pressure within the cooling system.

■ **NOTE**

- **The above data represents industrial standards that necessitate a minimum glycol content in the concentrated anti-freeze.**
- **When the coolant level drops due to evaporation, add fresh, soft water only to keep the anti-freeze mixing ratio less than 50 %. In case of leakage, add anti-freeze and fresh, soft water in the specified mixing ratio.**
- **Anti-freeze absorbs moisture. Keep unused anti-freeze in a tightly sealed container.**
- **Do not use radiator cleaning agents when anti-freeze has been added to the coolant.**
  (Anti-freeze contains an anti-corrosive agent, which will react with the radiator cleaning agent forming sludge which will affect the engine parts.)

W1039218

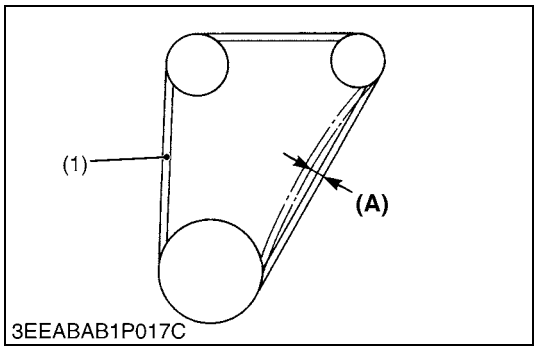

Replacing Fan Belt

1. Remove the alternator.
2. Remove the fan belt (1).
3. Replace new fan belt.
4. Install the alternator.
5. Check the fan belt tension.

Deflection **(A)**	Factory spec.	7.0 to 9.0 mm / 98 N 0.28 to 0.35 in. / 98 N (10 kgf, 22 lbf)

(1) Fan Belt **(A) Deflection**

W1052220

https://truckmanualshub.com/

[9] CHECK POINTS OF EVERY 1 OR 2 MONTHS

Recharging

CAUTION

- **When the battery is being activated, hydrogen and oxygen gases in the battery are extremely explosive. Keep open sparks and flames away from the battery at all times, especially when charging the battery.**
- **When charging battery, remove battery vent plugs.**
- **When disconnecting the cable from the battery, start with the negative terminal first. When connecting the cable to the battery, start with the positive terminal first.**
- **Never check battery charge by placing a metal object across the posts.**
  Use a voltmeter or hydrometer.

1) Slow Charging

1. Add distilled water if the electrolyte level is low. When charging, the amount of electrolyte should be slightly lower than the specified level to prevent overflow.
2. Connect the battery to the charging unit, following the manufacture's instructions.
3. As the electrolyte generates gas while charging, remove all port caps.
4. The electrolyte temperature must not exceed 40 °C (104 °F) during charging.
   If it exceed 40 °C (104 °F), decrease the charging amperage or stop charging for a while.
5. When charging several batteries in series, charge at the rate of the smallest battery in the line.

2) Quick Charging

1. Determine the proper charging current and charging time with the tester attached to the quick charger.
2. Determine the proper charging current as 1/1 of the battery capacity. If the battery capacity exceeds 50 Ah, consider 50 A as the maximum.

■ Precaution for Operating a Quick Charger

- Operate with a quick charger differs according to the type.
  Consult the instruction manual and use accordingly.

W1052658

https://truckmanualshub.com/

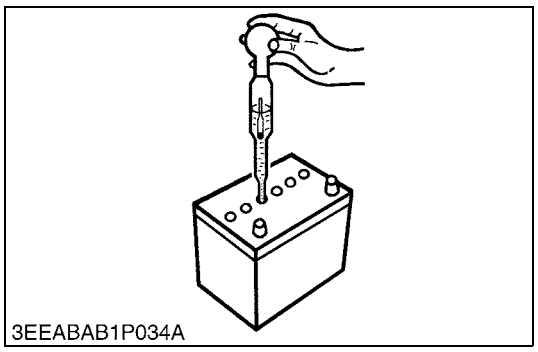
3EEABAB1P034A

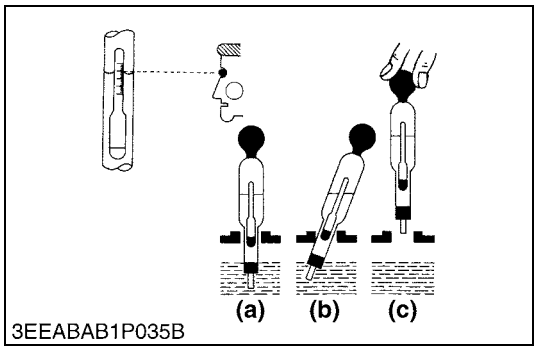

3EEABAB1P035B

Battery Specific Gravity

1. Check the specific gravity of the electrolyte in each cell with a hydrometer.
2. When the electrolyte temperature differs from that at which the hydrometer was calibrated, correct the specific gravity reading following the formula mentioned in **(Reference)**.
3. If the specific gravity is less than 1.215 (after it is corrected for temperature), charge or replace the battery.
4. If the specific gravity differs between any two cells by more than 0.05, replace the battery.

■ **NOTE**

- **Hold the hydrometer tube vertical without removing it from the electrolyte.**
- **Do not suck too much electrolyte into the tube.**
- **Allow the float to move freely and hold the hydrometer at eye level.**
- **The hydrometer reading must be taken at the highest electrolyte level.**

(Reference)

- Specific gravity slightly varies with temperature. To be exact, the specific gravity decreases by 0.0007 with an increase of 1 °C (0.0004 with an increase of 1 °F) in temperature, and increases by 0.0007 with a decreases of 1 °C (0.0004 with a decrease of 1 °F).
  Therefore, using 20 °C (68 °F) as a reference, the specific gravity reading must be corrected by the following formula :
  - Specific gravity at 20 °C = Measured value + 0.0007 × (electrolyte temperature : 20 °C)
  - Specific gravity at 68 °F = Measured value + 0.0004 × (electrolyte temperature : 68 °F)

Specific Gravity	State of Charge
1.260 Sp. Gr.	100 % Charged
1.230 Sp. Gr.	75 % Charged
1.200 Sp. Gr.	50 % Charged
1.170 Sp. Gr.	25 % Charged
1.140 Sp. Gr.	Very Little Useful Capacity
1.110 Sp. Gr.	Discharged

At an electrolyte temperature of 20 °C (68 °F)

(a) Good
(b) Bad
(c) Bad

W1012763

[10] CHECK POINTS OF EVERY YEAR

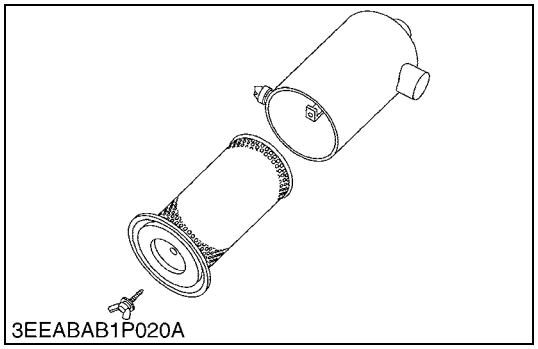
3EEABAB1P020A

Replacing Air Cleaner Element

1. Remove used air cleaner element.
2. Replace new air cleaner element.

■ **NOTE**

- **The air cleaner uses a dry element. Never apply oil to it.**
- **Do not run the engine with filter element removed.**

W1020554

https://truckmanualshub.com/

[11] CHECK POINTS OF EVERY 800 HOURS

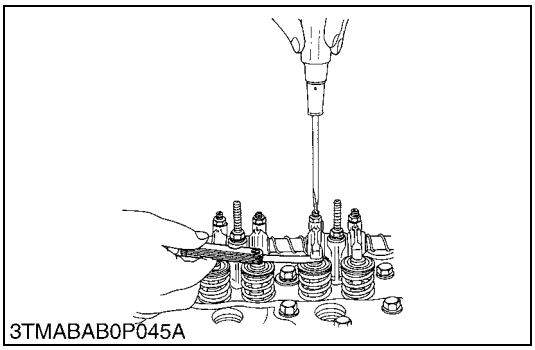
3TMABAB0P045A

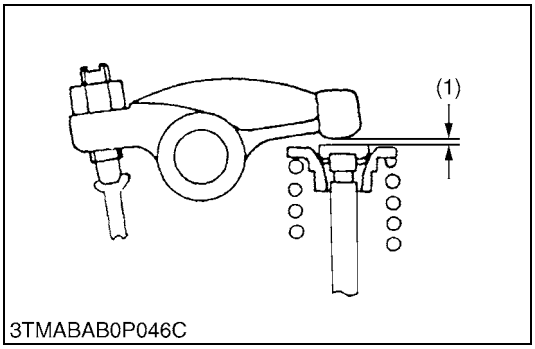

3TMABAB0P046C

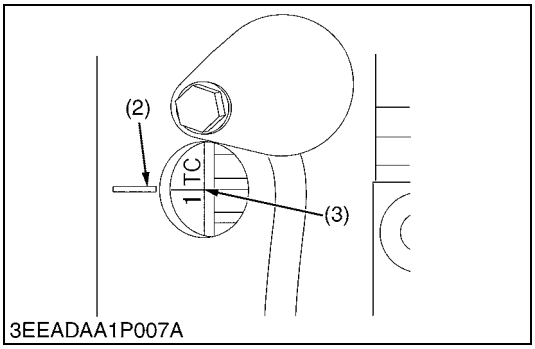

3EEADAA1P007A

Valve Clearance

■ **IMPORTANT**

- **Valve clearance must be checked and adjusted when engine is cold.**

1. Remove the head cover.
2. Align the **"1TC"** mark line (3) on the flywheel and projection (2) on the housing so that the No.1 piston comes to the compression or overlap top dead center.
3. Check the following valve clearance (1) marked with "☆" using a feeler gauge.
4. If the clearance is not within the factory specifications, adjust with the adjusting screw.

Valve clearance	Factory spec.	0.18 to 0.22 mm 0.0071 to 0.0086 in.

■ **NOTE**

- **The "1TC" mark line on the flywheel is just for No. 1 cylinder. There is no "TC" marking for the other cylinders.**
- **No. 1 piston comes to the top dead center position when the "TC" marking is aligned with the projection (2) in the window on flywheel-housing. Turn the flywheel 0.26 rad (15 °) clockwise and counterclockwise to see if the piston is at the compression top dead center or the overlap position. Now referring to the table below, readjust the valve clearance (1). (The piston is at the top dead center when both the IN. and EX. valves do not move; it is at the overlap position when both the valves move.)**
- **Finally turn the flywheel 6.28 rad (360 °) and align the "1TC" mark line and the projection (2) perfectly. Adjust all the other valve clearance as required.**
- **After turning the flywheel counterclockwise twice or three times, recheck the valve clearance (1).**
- **After adjusting the valve clearance (1), firmly tighten the lock nut of the adjusting screw.**

Valve arrangement / Adjustable cylinder location of piston		3 Cylinder		4 Cylinder	
		IN.	EX.	IN.	EX.
When No. 1 piston is at compression top dead center	No. 1	☆	☆	☆	☆
	No. 2		☆	☆	
	No. 3	☆			☆
	No. 4	–	–		
When No. 1 piston is at overlap position	No. 1				
	No. 2	☆			☆
	No. 3		☆	☆	
	No. 4	–	–	☆	☆

(1) Valve Clearance
(2) Projection
(3) 1TC Mark Line

W10113200

https://truckmanualshub.com/

[12] CHECK POINTS OF EVERY 1500 HOURS

CAUTION

- **Check the injection pressure and condition after confirming that there is nobody standing in the direction the fume goes.**
- **If the fume from the nozzle directly contacts the human body, cells may be destroyed and blood poisoning may be caused.**

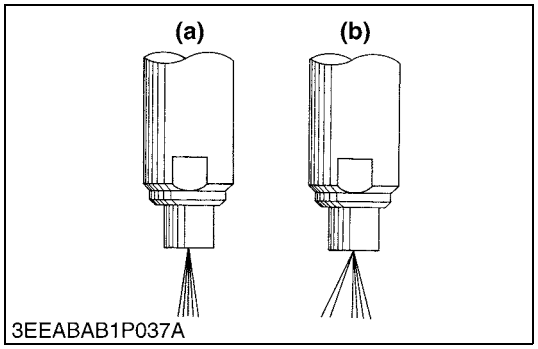

3EEABAB1P037A

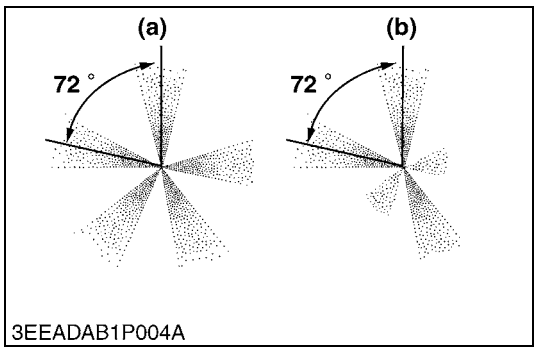

3EEADAB1P004A

Nozzle Spraying Condition

[D1503-M, D1703-M, D1803-M, V2003-M, V2203-M, V2403-M, V2403-M-T]
[D1703-M-BG, V2003-M-BG, V2003-M-T-BG, V2203-M-BG, V2403-M-BG]

1. Set the injection nozzle to a nozzle tester, and check the nozzle spraying condition.
2. If the spraying condition is defective, replace the nozzle piece.

(a) Good **(b) Bad**

W10411400

[D1803-M-DI, V2403-M-DI, V2403-M-DI-T]

1. Set the injection nozzle to a nozzle tester, and check the nozzle spraying condition.
2. If the spraying condition is defective, replace the injection nozzle assembly.

(a) Good **(b) Bad**

W1037040

https://truckmanualshub.com/

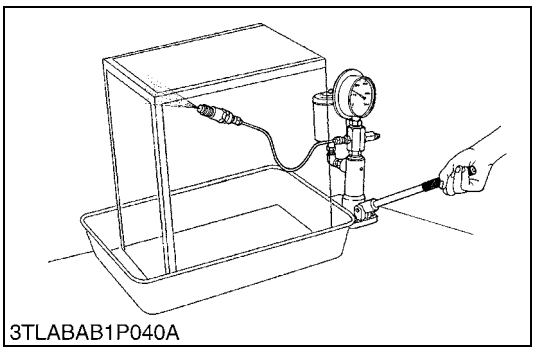
3TLABAB1P040A

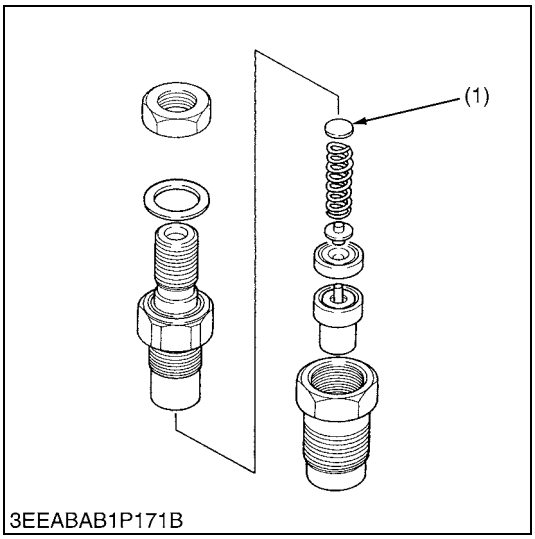

3EEABAB1P171B

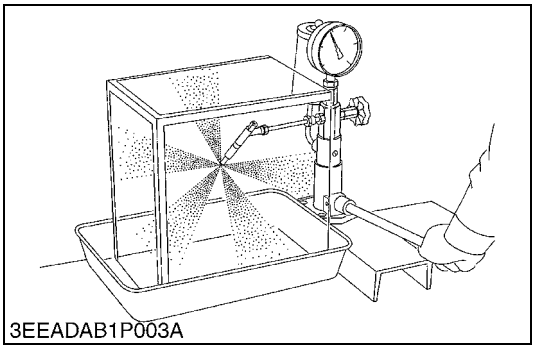
3EEADAB1P003A

Fuel Injection Pressure

[D1503-M, D1703-M, D1803-M, V2003-M, V2203-M, V2403-M, V2403-M-T]
[D1703-M-BG, V2003-M-BG, V2003-M-T-BG, V2203-M-BG, V2403-M-BG]

1. Set the injection nozzle to a nozzle tester.
2. Slowly move the tester handle to measure the pressure at which fuel begins jetting out from the nozzle.
3. If the measurement is not within the factory specifications, replace the adjusting washer (1) in the nozzle holder to adjust it.

(Reference)

- Pressure variation with 0.025 mm (0.00098 in.) difference of adjusting washer thickness.
  Approx. 590 kPa (6.0 kgf/cm^2, 85 psi)

Fuel injection pressure	Factory spec.	13.73 to 14.70 MPa 140.0 to 150.0 kgf/cm^2 1992 to 2133 psi

(1) Adjusting Washer

W10182100

[D1803-M-DI, V2403-M-DI, V2403-M-DI-T]

1. Set the injection nozzle to a nozzle tester.
2. Slowly move the tester handle to measure the pressure at which fuel begins jetting out from the nozzle.
3. If the measurement is not within the factory specifications, replace the injection nozzle assembly.

Fuel injection pressure (1st stage)	Factory spec.	18.64 to 20.10 MPa 190.0 to 205.0 kgf/cm^2 2703 to 2915 psi

W10408820

https://truckmanualshub.com/

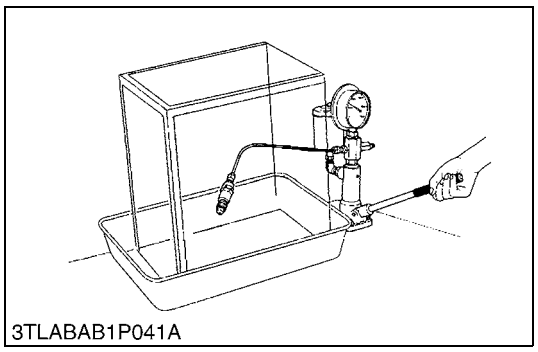
3TLABAB1P041A

Valve Seat Tightness

[D1503-M, D1703-M, D1803-M, V2003-M, V2203-M, V2403-M, V2403-M-T]
[D1703-M-BG, V2003-M-BG, V2003-M-T-BG, V2203-M-BG, V2403-M-BG]

1. Set the injection nozzle to a nozzle tester.
2. Raise the fuel pressure, and keep at 12.75 MPa (130.0 kgf/cm^2, 1849 psi) for 10 seconds.
3. If any fuel leak is found, replace the nozzle piece.

Valve seat tightness	Factory spec.	No fuel leak at 12.75 MPa 130.0 kgf/cm^2 1849 psi

W10412730

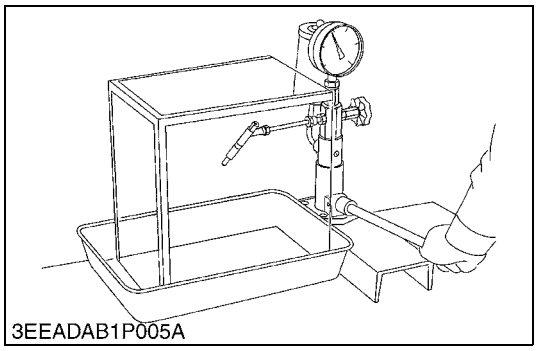
3EEADAB1P005A

[D1803-M-DI, V2403-M-DI, V2403-M-DI-T]

1. Set the injection nozzle to a nozzle tester.
2. Raise the fuel pressure, and keep at 16.67 MPa (170.0 kgf/cm^2, 2418 psi) for 10 seconds.
3. If any fuel leak is found, replace the injection nozzle assembly.

Valve seat tightness	Factory spec.	No fuel leak at 16.67 MPa 170.0 kgf/cm^2 2418 psi

W1037135

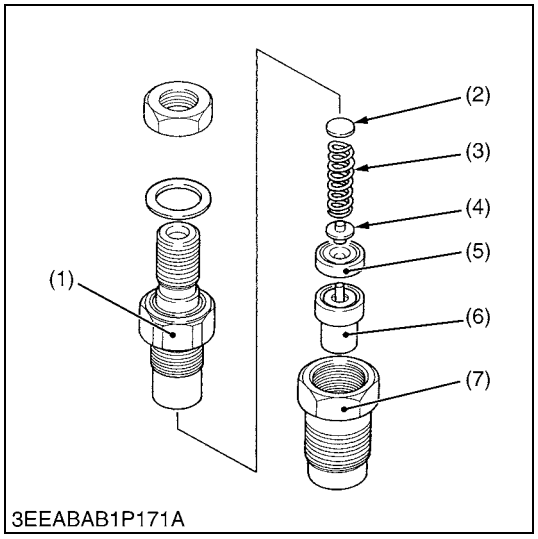

3EEABAB1P171A

Nozzle Holder

[D1503-M, D1703-M, D1803-M, V2003-M, V2203-M, V2403-M, V2403-M-T]
[D1703-M-BG, V2003-M-BG, V2003-M-T-BG, V2203-M-BG, V2403-M-BG]

1. Secure the nozzle retaining nut (7) with a vise.
2. Remove the nozzle holder (1), and take out parts inside.

(When reassembling)

- Assemble the nozzle in clean fuel oil.
- Install the push rod (4), noting its direction.
- After assembling the nozzle, be sure to adjust the fuel injection pressure.

Tightening torque	Nozzle holder	35 to 39 N·m 3.5 to 4.0 kgf·m 26 to 28 lbf·ft
	Overflow pipe retaining nut	20 to 24 N·m 2.0 to 2.5 kgf·m 15 to 18 lbf·ft
	Nozzle holder assembly	49 to 68 N·m 5.0 to 7.0 kgf·m 37 to 50 lbf·ft

(1) Nozzle Holder
(2) Adjusting Washer
(3) Nozzle Spring
(4) Push Rod
(5) Distance Piece
(6) Nozzle Piece
(7) Nozzle Retaining Nut

W1018491

https://truckmanualshub.com/

[13] CHECK POINTS OF EVERY 3000 HOURS

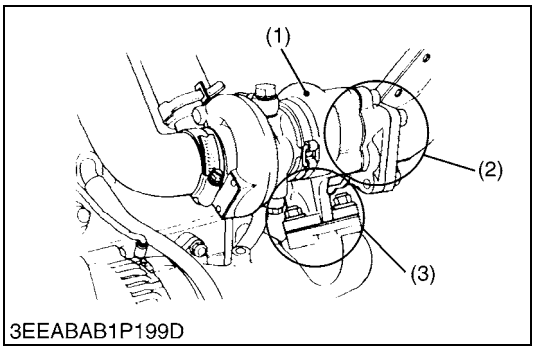

3EEABAB1P199D

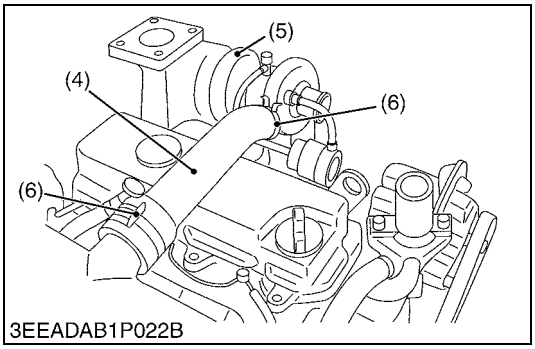

3EEADAB1P022B

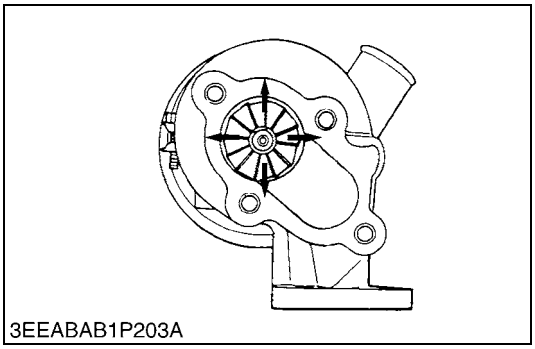
3EEABAB1P203A

Checking Turbocharger

(Turbine Side)

1. Check the exhaust port (2) and inlet port (3) side of turbine housing (1) to see if there is no exhaust gas leak.
2. If any gas leak is found, retighten the bolts and nuts or replace the gasket with new one.

(Compressor Side)

1. Check the inlet hose (4) of the compressor cover (5) to see if there is no air leak.
2. Check for loose connections or cracks in the suction side of the intake hose.
3. If any air leak is found, change the clamp (6) and / or inlet hoses.

(Radial Clearance)

1. If the wheel contact to the housing, replace the turbocharger assembly with new one.

(1) Turbine Housing
(2) Exhaust Port
(3) Inlet Port
(4) Inlet Hose
(5) Compressor Cover
(6) Clamp

W1022082

https://truckmanualshub.com/

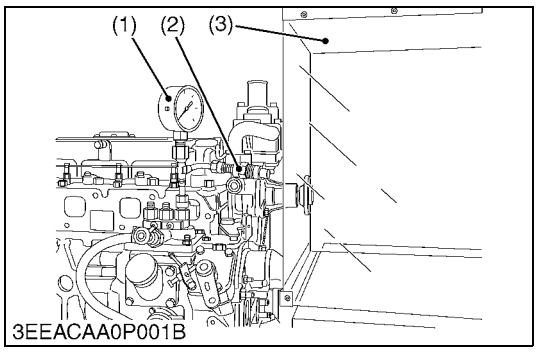

Checking Injection Pump

[D1503-M, D1703-M, D1803-M, V2003-M, V2203-M, V2403-M, V2403-M-T]
[D1703-M-BG, V2003-M-BG, V2003-M-T-BG, V2203-M-BG, V2403-M-BG]

(Fuel Tightness of Pump Element)

1. Remove the solenoid.
2. Remove the injection pipes and glow plugs.
3. Install the injection pump pressure tester to the injection pump.
4. Install the injection nozzle (2) jetted with the proper injection pressure to the injection pump pressure tester (1). (Refer to the figure.)
5. Set the speed control lever to the maximum speed position.
6. Run the starter to increase the pressure.
7. If the pressure can not reach the allowable limit, replace the pump with new one or repair with a Kubota-authorized pump service shop.

(Fuel Tightness of Delivery Valve)

1. Remove the solenoid.
2. Remove the injection pipes and glow plugs.
3. Set a pressure tester to the fuel injection pump.
4. Install the injection nozzle (2) jetted with the proper injection pressure to the injection pump pressure tester (1).
5. Run the starter to increase the pressure.
6. Stop the starter when the fuel jets from the injection nozzle. After that, turn the flywheel by the hand and raise the pressure to approx. 13.73 MPa (140.0 kgf/cm^2, 1991 psi).
7. Now turn the flywheel back about half a turn (to keep the plunger free). Maintain the flywheel at this position and clock the time taken for the pressure to drop from 13.73 to 12.75 MPa (from 140.0 to 130.0 kgf/cm^2, from 1991 to 1849 psi).
8. Measure the time needed to decrease the pressure from 13.73 to 12.75 MPa (from 140.0 to 130.0 kgf/cm^2, from 1991 to 1849 psi).
9. If the measurement is less than allowable limit, replace the pump with new one or repair with a Kubota-authorized pump service shop.

Fuel tightness of pump element	Allowable limit	13.73 MPa 140.0 kgf/cm^2 1991 psi
Fuel tightness of delivery valve	Factory spec.	10 seconds 13.73 → 12.75 MPa 140.0 → 130.0 kgf/cm^2 1991 → 1849 psi
	Allowable limit	5 seconds 13.73 → 12.75 MPa 140.0 → 130.0 kgf/cm^2 1991 → 1849 psi

■ **NOTE**

- **Never try to disassemble the injection pump assembly. For repairs, you are strongly requested to contact a Kubota-authorized pump service shop.**

(1) Injection Pump Pressure Tester
(2) Injection Nozzle
(3) Protection Cover for Jetted Fuel

W1022357

https://truckmanualshub.com/

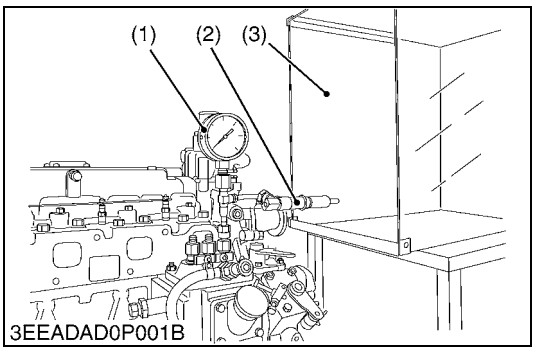

Checking Injection Pump

[D1803-M-DI, V2403-M-DI, V2403-M-DI-T]

(Fuel Tightness of Pump Element)

1. Remove the solenoid.
2. Remove the injection pipes and glow plugs.
3. Install the injection pump pressure tester to the injection pump.
4. Install the injection nozzle (2) jetted with the proper injection pressure to the injection pump pressure tester (1). (Refer to the figure.)
5. Set the speed control lever to the maximum speed position.
6. Run the starter to increase the pressure.
7. If the pressure can not reach the allowable limit, replace the pump with new one or repair with a Kubota-authorized pump service shop.

(Fuel Tightness of Delivery Valve)

1. Remove the solenoid.
2. Remove the injection pipes and glow plugs.
3. Set a pressure tester to the fuel injection pump.
4. Install the injection nozzle (2) jetted with the proper injection pressure to the injection pump pressure tester (1).
5. Run the starter to increase the pressure.
6. Stop the starter when the fuel jets from the injection nozzle. After that, turn the flywheel by the hand and raise the pressure to approx. 18.63 MPa (190.0 kgf/cm^2, 2702 psi).
7. Now turn the flywheel back about half a turn (to keep the plunger free). Maintain the flywheel at this position and clock the time taken for the pressure to drop from 18.63 to 17.65 MPa (from 190.0 to 180.0 kgf/cm^2, from 2702 to 2560 psi).
8. Measure the time needed to decrease the pressure from 18.63 to 17.65 MPa (from 190.0 to 180.0 kgf/cm^2, from 2702 to 2560 psi).
9. If the measurement is less than allowable limit, replace the pump with new one or repair with a Kubota-authorized pump service shop.

Fuel tightness of pump element	Allowable limit	18.63 MPa 190.0 kgf/cm^2 2702 psi
Fuel tightness of delivery valve	Factory spec.	10 seconds 18.63 → 17.65 MPa 190.0 → 180.0 kgf/cm^2 2702 → 2560 psi
	Allowable limit	5 seconds 18.63 → 17.65 MPa 190.0 → 180.0 kgf/cm^2 2702 → 2560 psi

■ **NOTE**

- **Never try to disassemble the injection pump assembly. For repairs, you are strongly requested to contact a Kubota-authorized pump service shop.**

(1) Injection Pump Pressure Tester
(2) Injection Nozzle
(3) Protection Cover for Jetted Fuel

W1037269

https://truckmanualshub.com/

[14] CHECK POINTS OF EVERY 2 YEARS

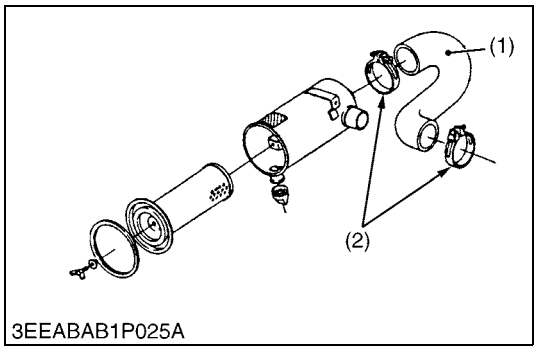

Replacing Intake Air Line

1. Loosen the clamp (2).
2. Remove the intake air hose (1) and clamp (2).
3. Replace new intake air hose (1) and new clamp (2).
4. Tighten the clamp (2).

■ **NOTE**

- **To prevent serious damage to the engine, keep out any dust inside the intake air line.**

(1) Intake Air Hose (2) Clamp

W1023867

Replacing Battery

CAUTION

- **When the battery is being activated, hydrogen and oxygen gases in the battery are extremely explosive. Keep open sparks and flames away from the battery at all times, especially when charging the battery.**
- **When charging battery, remove battery vent plugs.**
- **When disconnecting the cable from the battery, start with the negative terminal first. When connecting the cable to the battery, start with the positive terminal first.**
- **Never check battery charge by placing a metal object across the posts.**

1. Disconnect the negative terminal and positive terminal.
2. Remove the battery holder.
3. Remove the used battery.
4. Replace the new battery.
5. Tighten the battery holder.
6. Connect the positive terminal.
7. Connect the negative terminal.

W1023996

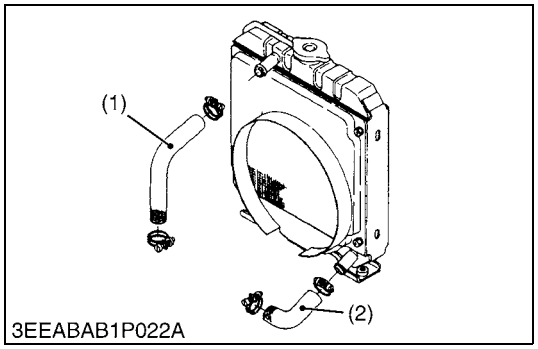

Replacing Radiator Hoses and Clamp Bands

CAUTION

- **Do not remove the radiator cap when the engine is hot. Then loosen cap slightly to the stop to relieve any excess pressure before removing cap completely.**

1. Drain the coolant.
2. Loosen the clamp bands.
3. Remove the upper hose (1) and lower hose (2).
4. Replace new upper / lower hose (1), (2) and clamp bands.
5. Tighten the clamp bands.
6. Fill with clean water and anti-freeze until the coolant level is just below the port. Install the radiator cap securely.

(1) Upper Hose (2) Lower Hose

W1024178

https://truckmanualshub.com/

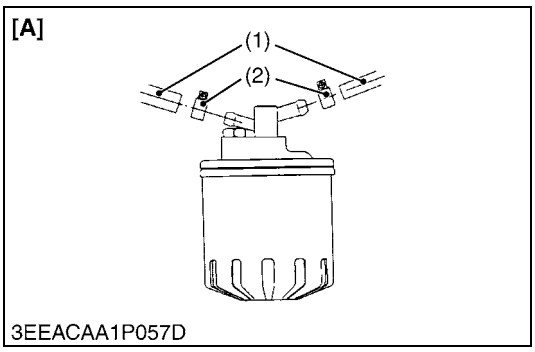

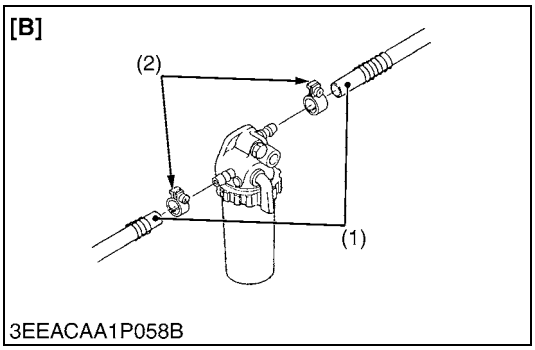

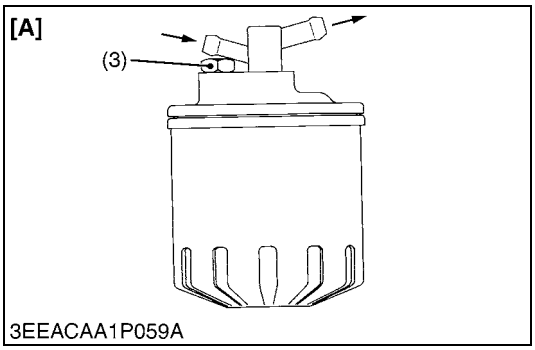

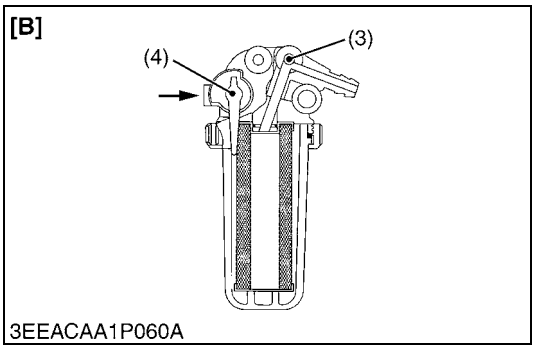

Replacing Fuel Hoses and Clamp Bands

1. Loosen the clamp (2) and remove the fuel hose (1).
2. Replace new fuel hose (1) and new clamp (2).
3. Tighten the clamp (2).

CAUTION

- **Stop the engine when attempting the check and change prescribed above.**

(When bleeding fuel system)

1. Fill the tank with fuel and open the cock (4). (**[B]** only.)
2. Loosen the air vent plug (3) of the fuel filter a few turns.
3. Screw back the plug when bubbles do not come up any more.
4. Open the air vent cock on top of the fuel injection pump.
5. If equipped electrical fuel feed pump, turn the key to **AC** position and pump the fuel up for 10 to 15 seconds.
   If equipped mechanical fuel feed pump, set the stop lever on stop position and crank the engine for 10 to 15 seconds.
6. Close securely the air vent cock after air bleeding.

■ **NOTE**

- **Always keep the air vent cock on the fuel injection pump closed except when air is vented, or it may cause the engine to stop.**

(1) Fuel Hose
(2) Clamp
(3) Air Vent Plug
(4) Fuel Cock

[A] Cartridge Type
[B] Element Type

W1024305

https://truckmanualshub.com/

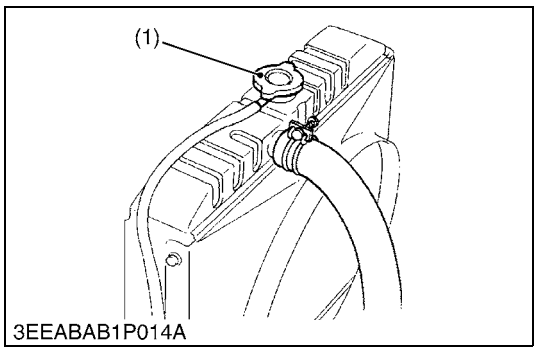

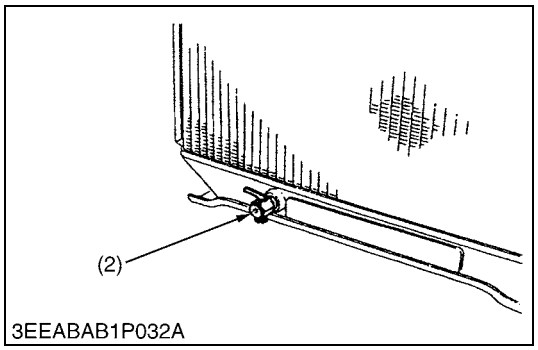

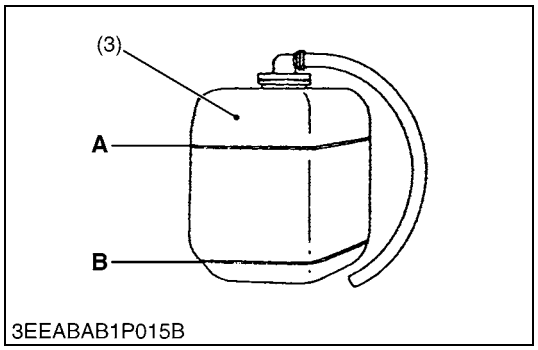

Changing Radiator Coolant (L.L.C.)

CAUTION

- **Do not remove the radiator cap when the engine is hot. Then loosen cap slightly to the stop to relieve any excess pressure before removing cap completely.**

1. Stop the engine and let cool down.
2. To drain the coolant, open the radiator drain plug (2) and remove the radiator cap (1). Then radiator cap (1) must be removed to completely drain the coolant. And open the drain cock of engine body.
3. After all coolant is drained, close the drain plug.
4. Fill with clean water and cooling system cleaner.
5. Follow directions of the cleaner instruction.
6. After flushing, fill with clean water and anti-freeze until the coolant level is just below the port. Install the radiator cap (1) securely.
7. Fill with coolant up to “FULL” (**A**) mark on the recovery tank (3).
8. Start and operate the engine for few minutes.
9. Stop the engine and let cool. Check coolant level of radiator and recovery tank (3) and add coolant if necessary.

■ **IMPORTANT**

- **Do not start engine without coolant.**
- **Use clean, fresh, soft water and anti-freeze to fill the radiator and recovery tank.**
- **When the anti-freeze is mixed with fresh, soft water, the anti-freeze mixing ratio must be less than 50 %.**
- **Securely tighten radiator cap. If the cap is loose or improperly fitted, water may leak out and the engine could overheat.**

(1) Radiator Cap
(2) Drain Plug
(3) Recovery Tank

A : Full
B : Low

W1024599

https://truckmanualshub.com/

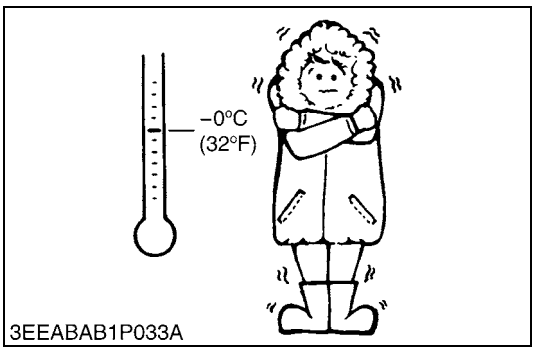

Changing Radiator Coolant (L.L.C.) (Continued)

(Anti-freeze)

- There are two types of anti-freeze available: use the permanent type (PT) for this engine.
- Before adding anti-freeze for the first time, clean the radiator interior by pouring fresh, soft water and draining it a few times.
- The procedure for mixing water and anti-freeze differs according to the make of the anti-freeze and the ambient temperature. Basically, it should be referred to SAE J1034 standard, more specifically also to SAE J814c.
- Mix the anti-freeze with fresh, soft water, and then fill into the radiator.

■ **IMPORTANT**

- **When the anti-freeze is mixed with fresh, soft water, the anti-freeze mixing ratio must be less than 50 %.**

Vol % anti-freeze	Freezing point		Boiling point*	
	°C	°F	°C	°F
40	–24	–11	106	223
50	–37	–35	108	226

* At 1.01 × 100000 Pa (760 mmHg) pressure (atmospheric). A higher boiling point is obtained by using a radiator pressure cap which permits the development of pressure within the cooling system.

■ **NOTE**

- **The above data represents industrial standards that necessitate a minimum glycol content in the concentrated anti-freeze.**
- **When the coolant level drops due to evaporation, add fresh, soft water only to keep the anti-freeze mixing ratio less than 50 %. In case of leakage, add anti-freeze and fresh, soft water in the specified mixing ratio.**
- **Anti-freeze absorbs moisture. Keep unused anti-freeze in a tightly sealed container.**
- **Do not use radiator cleaning agents when anti-freeze has been added to the coolant.**
  (Anti-freeze contains an anti-corrosive agent, which will react with the radiator cleaning agent forming sludge which will affect the engine parts.)

W1024852

https://truckmanualshub.com/

5. SPECIAL TOOLS

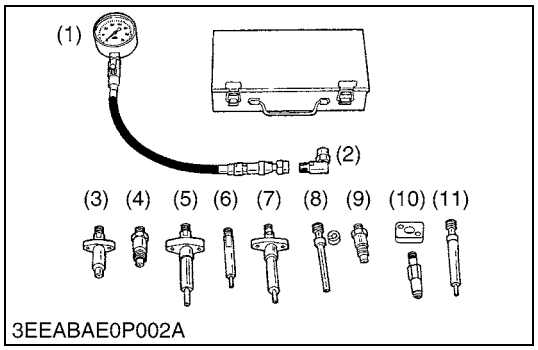

Diesel Engine Compression Tester

[D1503-M, D1703-M, D1803-M, V2003-M, V2203-M, V2403-M, V2403-M-T]
[D1703-M-BG, V2003-M-BG, V2003-M-T-BG, V2203-M-BG, V2403-M-BG]

Code No: 07909-30208 (Assembly) 07909-31251 (G)
07909-30934 (A to F) 07909-31271 (I)
07909-31211 (E and F) 07909-31281 (J)
07909-31231 (H)

Application: Use to measure diesel engine compression and diagnosis of need for major overhaul.

(1) Gauge
(2) **L** Joint
(3) Adaptor **A**
(4) Adaptor **B**
(5) Adaptor **C**
(6) Adaptor **E**
(7) Adaptor **F**
(8) Adaptor **G**
(9) Adaptor **H**
(10) Adaptor **I**
(11) Adaptor **J**

W1024200

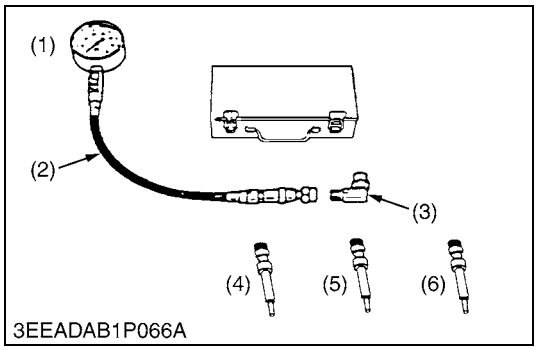

Diesel Engine Compression Tester (for Glow Plug)

[D1803-M-DI, V2403-M-DI, V2403-M-DI-T]

Code No.: 07909-39081 (Assembly)
07909-31291 (**K**)
07909-31301 (**L**)
07909-31311 (**M**)

Application: Use to measure diesel engine compression and diagnosis of need for major overhaul.

Adaptor: The adaptor **K** is required for 03-M-DI.

(1) Gauge
(2) Hose Assembly
(3) L Joint
(4) Adaptor **K**
(5) Adaptor **L**
(6) Adaptor **M**

W1206183

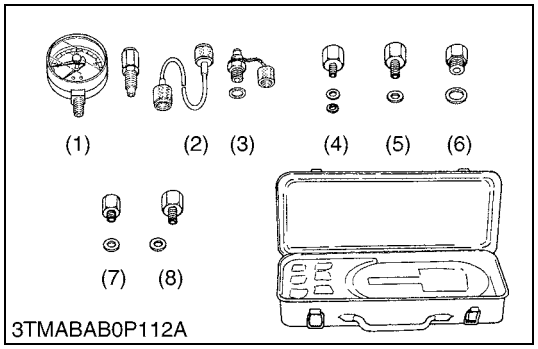

Oil Pressure Tester

Code No: 07916-32032

Application: Use to measure lubricating oil pressure.

(1) Gauge
(2) Cable
(3) Threaded Joint
(4) Adaptor **1**
(5) Adaptor **2**
(6) Adaptor **3**
(7) Adaptor **4**
(8) Adaptor **5**

W1024318

https://truckmanualshub.com/

■ **NOTE**

- **The following special tools are not provided, so make them referring to the figure.**

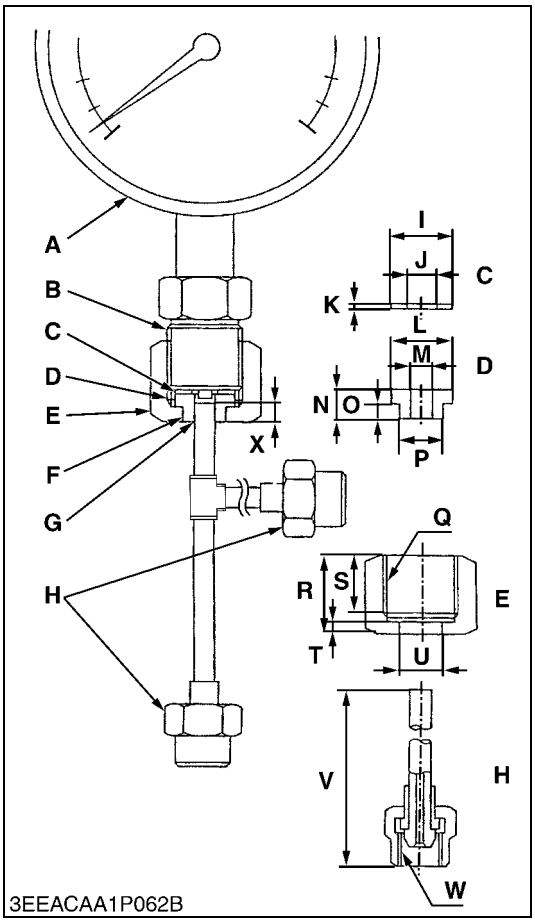

Injection Pump Pressure Tester

Application: Use to check fuel tightness of injection pumps.

A	Pressure gauge full scale : More than 29.4 MPa (300 kgf/cm^2, 4267 psi)
B	PF 1/2
C	Copper gasket
D	Flange (Material : Steel)
E	Hex. nut 27 mm (1.1 in.) across the plat
F	Adhesive application
G	Fillet welding on the enter circumference
H	Retaining nut
I	17 mm dia. (0.67 in. dia.)
J	8 mm dia. (0.3 in. dia.)
K	1.0 mm (0.039 in.)
L	17 mm dia. (0.67 in. dia.)
M	6.10 to 6.20 mm dia. (0.241 to 0.244 in. dia.)
N	8 mm (0.3 in.)
O	4 mm (0.2 in.)
P	11.97 to 11.99 mm dia. (0.4713 to 0.4720 in. dia.)
Q	PF 1/2
R	23 mm (0.91 in.)
S	17 mm (0.67 in.)
T	4 mm (0.2 in.)
U	12.00 to 12.02 mm dia. (0.4725 to 0.4732 in. dia.)
V	100 mm (3.94 in.)
W	M12 × P1.5
X	5 mm (0.2 in.)

W10252400

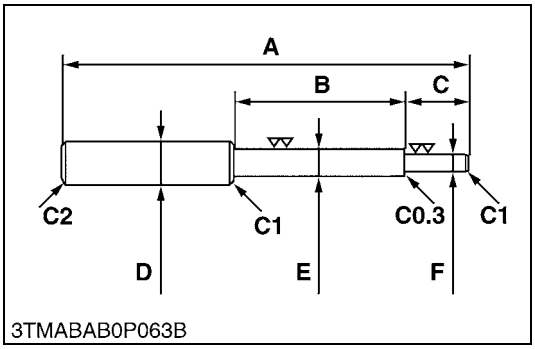

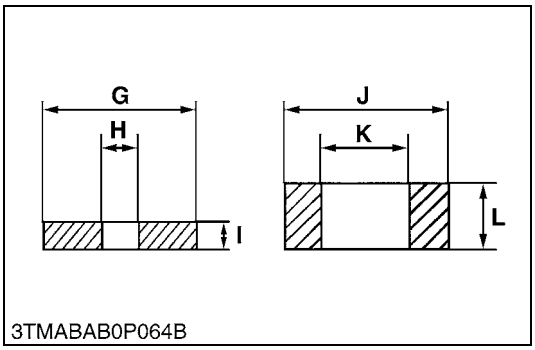

Valve Guide Replacing Tool

Application: Use to press out and press fit the valve guide.

A	225 mm (8.86 in.)
B	70 mm (2.8 in.)
C	45 mm (1.8 in.)
D	20 mm dia. (0.79 in. dia.)
E	12.7 to 12.9 mm dia. (0.500 to 0.507 in. dia.)
F	7.50 to 7.60 mm dia. (0.296 to 0.299 in. dia.)
G	25 mm dia. (0.98 in. dia.)
H	7.70 to 8.00 mm dia. (0.304 to 0.314 in. dia.)
I	5 mm (0.2 in.)
J	20 mm dia. (0.79 in. dia.)
K	13.5 to 13.8 mm dia. (0.532 to 0.543 in. dia.)
L	8.90 to 9.10 mm (0.351 to 0.358 in.)
C1	Chamfer 1.0 mm (0.039 in.)
C2	Chamfer 2.0 mm (0.079 in.)
C0.3	Chamfer 0.3 mm (0.01 in.)

W1025017

https://truckmanualshub.com/

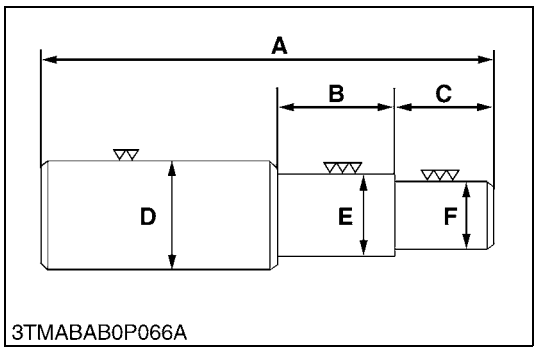

Bushing Replacing Tools

Application: Use to press out and to press fit the bushing.

1. For small end bushing

A	162 mm (6.38 in.)
B	35 mm (1.4 in.)
C	27 mm (1.1 in.)
D	35 mm dia. (1.4 in. dia.)
E	27.90 to 27.95 mm dia. (1.099 to 1.100 in. dia.)
F	25.00 to 25.01 mm dia. (0.9843 to 0.9846 in. dia.)

2. For idle gear bushing

A	175 mm (6.89 in.)
B	40 mm (1.6 in.)
C	38 mm (1.5 in.)
D	45 mm dia. (1.8 in. dia.)
E	41.90 to 41.95 mm dia. (1.650 to 1.651 in. dia.)
F	37.950 to 37.970 mm dia. (1.4941 to 1.4948 in. dia.)

W1025500

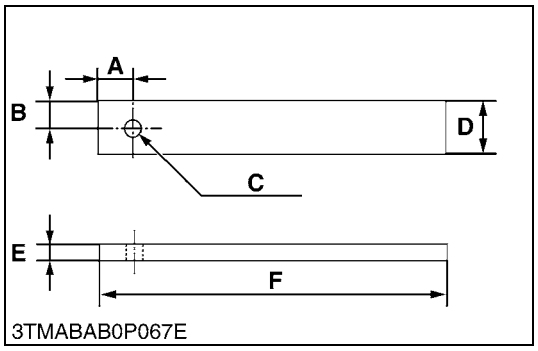

Flywheel Stopper

Application: Use to loosen and tighten the flywheel screw.

A	20 mm (0.79 in.)
B	15 mm (0.59 in.)
C	10 mm dia. (0.39 in. dia.)
D	30 mm (1.2 in.)
E	8 mm (0.3 in.)
F	200 mm (7.87 in.)

W10259480

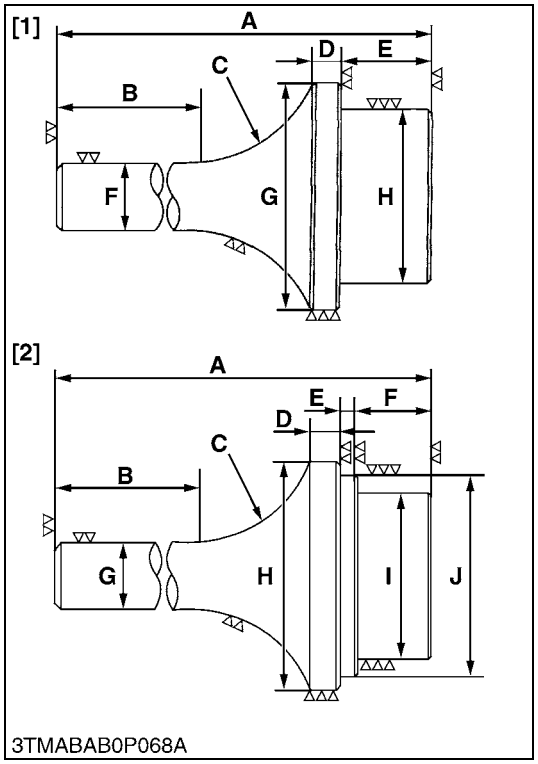

Crankshaft Bearing 1 Replacing Tool

Application: Use to press out and press fit the crankshaft bearing 1.

1. Extracting tool

A	135 mm (5.31 in.)
B	72 mm (2.8 in.)
C	40 mm radius (1.6 in. radius)
D	10 mm (0.39 in.)
E	20 mm (0.79 in.)
F	20 mm dia. (0.79 in. dia.)
G	64.80 to 64.90 mm dia. (2.552 to 2.555 in. dia.)
H	59.80 to 59.90 mm dia. (2.355 to 2.358 in. dia.)

2. Inserting tool

A	130 mm (5.12 in.)
B	72 mm (2.8 in.)
C	40 mm radius (1.6 in. radius)
D	9 mm (0.4 in.)
E	4 mm (0.2 in.)
F	20 mm (0.79 in.)
G	20 mm dia. (0.79 in. dia.)
H	68 mm dia. (2.7 in. dia.)
I	59.80 to 59.90 mm dia. (2.355 to 2.358 in. dia.)
J	64.80 to 64.90 mm dia. (2.552 to 2.555 in. dia.)

W1026139

https://truckmanualshub.com/

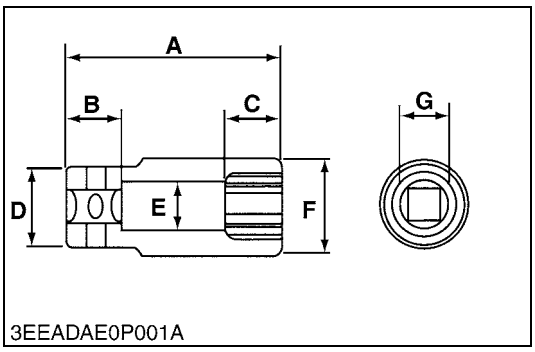

Socket Wrench for Crank Pulley Nut (46 mm Deep Socket Wrench)

Application: Use to loosen and tighten the fan drive pulley mounting nut.

A	100 mm (3.94 in.)
B	25.0 mm (0.984 in.)
C	27.0 mm (1.06 in.)
D	45.0 mm dia. (1.77 in. dia.)
E	35.0 mm dia. (1.38 in. dia.)
F	62.5 mm dia. (2.46 in. dia.)
G	46.0 mm (1.81 in.)

W1044361

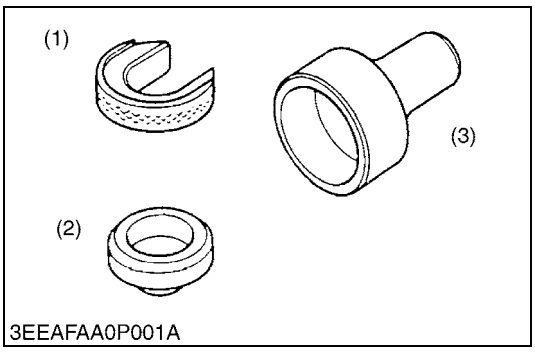

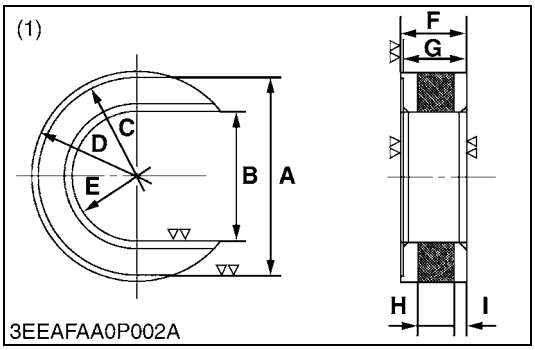

Auxiliary Socket for Fixing Crankshaft Sleeve

Application: Use to fix the crankshaft sleeve of the diesel engine.

A	80.0 mm (3.15 in.)
B	60.10 to 60.30 mm (2.367 to 2.374 in.)
C	80.0 mm dia. (3.15 in. dia.)
D	85.0 mm dia. (3.35 in. dia.)
E	60.10 to 60.30 mm dia. (2.367 to 2.374 in. dia.)
F	26.30 to 26.40 mm (1.036 to 1.039 in.)
G	25.85 to 25.90 mm (1.018 to 1.019 in.)
H	15.0 mm (0.591 in.)
I	5.0 mm (0.20 in.)

(1) Stopper
(2) Sleeve Guide
(3) Auxiliary Socket for Pushing

W1027695

https://truckmanualshub.com/

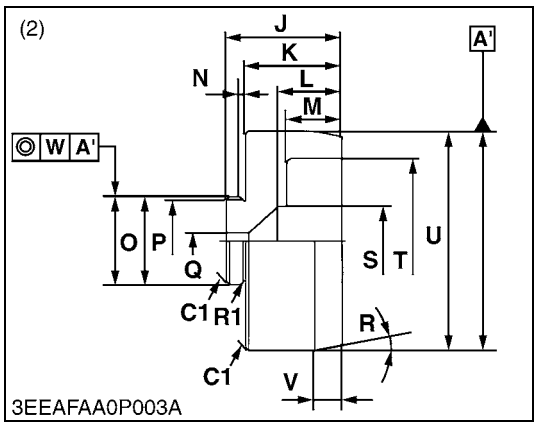

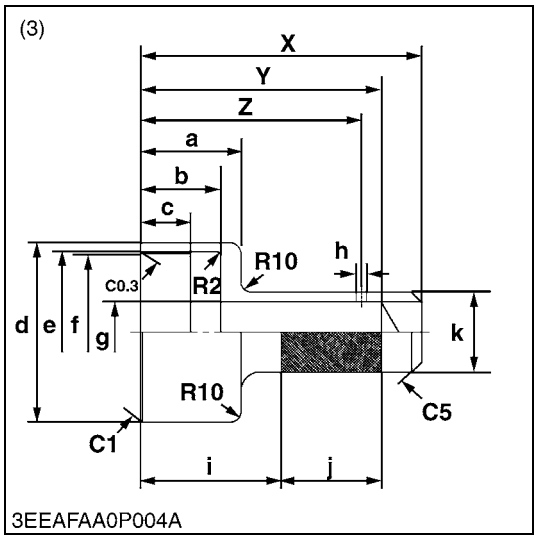

Auxiliary Socket for Fixing Crankshaft Sleeve (Continued)

Application: Use to fix the crankshaft sleeve of the diesel engine.

J	42.0 mm (1.65 in.)
K	30.50 to 30.60 mm (1.201 to 1.204 in.)
L	23.0 mm (0.906 in.)
M	20.0 mm (0.787 in.)
N	2.0 mm (0.079 in.)
O	31.911 to 31.950 mm dia. (1.2564 to 1.2578 in. dia.)
P	30.0 mm dia. (1.18 in. dia.)
Q	5.0 mm dia. (0.20 in. dia.)
R	0.09 rad (5 °)
S	25.0 mm dia. (0.984 in. dia.)
T	60.0 mm dia. (2.36 in. dia.)
U	79.80 to 79.85 mm dia. (3.142 to 3.143 in. dia.)
V	10.0 mm (0.394 in.)
W	0.04 mm dia. (0.002 in. dia.)
X	140 mm (5.51 in.)
Y	120 mm (4.72 in.)
Z	110 mm (4.33 in.)
a	50.0 mm (1.97 in.)
b	39.90 to 40.00 mm (1.571 to 1.574 in.)
c	25.0 mm (0.984 in.)
d	90.0 mm dia. (3.54 in. dia.)
e	81.0 mm dia. (3.19 in. dia.)
f	80.10 to 80.15 mm dia. (3.154 to 3.155 in. dia.)
g	30.0 mm dia. (1.18 in. dia.)
h	5.0 mm dia. (0.20 in. dia.)
i	70.0 mm (2.76 in.)
j	50.0 mm (1.97 in.)
k	40.0 mm dia. (1.57 in. dia.)
C1	Chamfer 1.0 mm (0.039 in.)
C5	Chamfer 5.0 mm (0.20 in.)
C0.3	Chamfer 0.3 mm (0.01 in.)
R1	1.0 mm radius (0.039 in. radius)
R2	2.0 mm radius (0.079 in. radius)
R10	10.0 mm radius (0.394 in. radius)

(2) Sleeve Guide (3) Auxiliary Socket for Pushing

W1027898

https://truckmanualshub.com/

Balancer Metal Replacing Tool (for Removing)

Application: Use to remove the metal bearing.

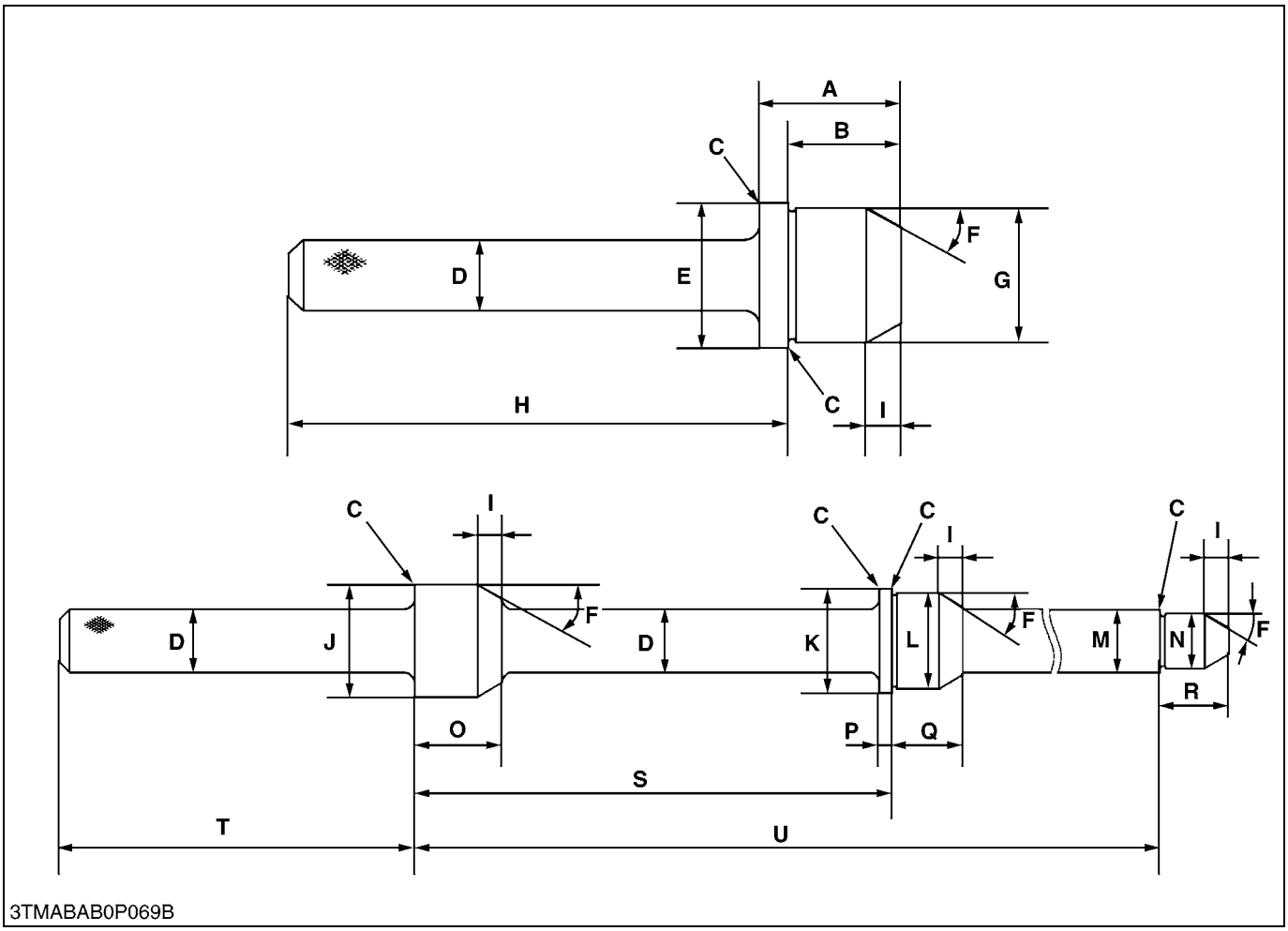

A	41 mm (1.6 in.)	L	41.934 to 41.950 mm dia. (1.6510 to 1.6515 in. dia.)
B	32.5 mm (1.28 in.)	M	24.959 to 24.980 mm dia. (0.98264 to 0.98346 in. dia.)
C	Chamfer 0.3 mm (0.01 in.)	N	21.947 to 21.960 mm dia. (0.86406 to 0.86456 in. dia.)
D	25 mm dia. (0.98 in. dia.)	O	36 mm (1.4 in.)
E	46.950 to 46.975 mm dia. (1.8485 to 1.8494 in. dia.)	P	5 mm (0.2 in.)
F	0.52 rad (30 °)	Q	29.0 mm (1.14 in.)
G	43.934 to 43.950 mm dia. (1.7297 to 1.7303 in. dia.)	R	28.0 mm (1.10 in.)
H	148.5 mm (5.846 in.)	S	195.25 to 195.75 mm (7.6870 to 7.7066 in.)
I	10 mm (0.39 in.)	T	145 mm (5.71 in.)
J	46.50 to 46.75 mm dia. (1.831 to 1.840 in. dia.)	U	384.75 to 385.25 mm (15.148 to 15.167 in.)
K	44.950 to 44.975 mm dia. (1.7697 to 1.7706 in. dia.)		

https://truckmanualshub.com/

Balancer Metal Replacing Tool (for Fitting)

Application: Use to press fit the metal bearing.

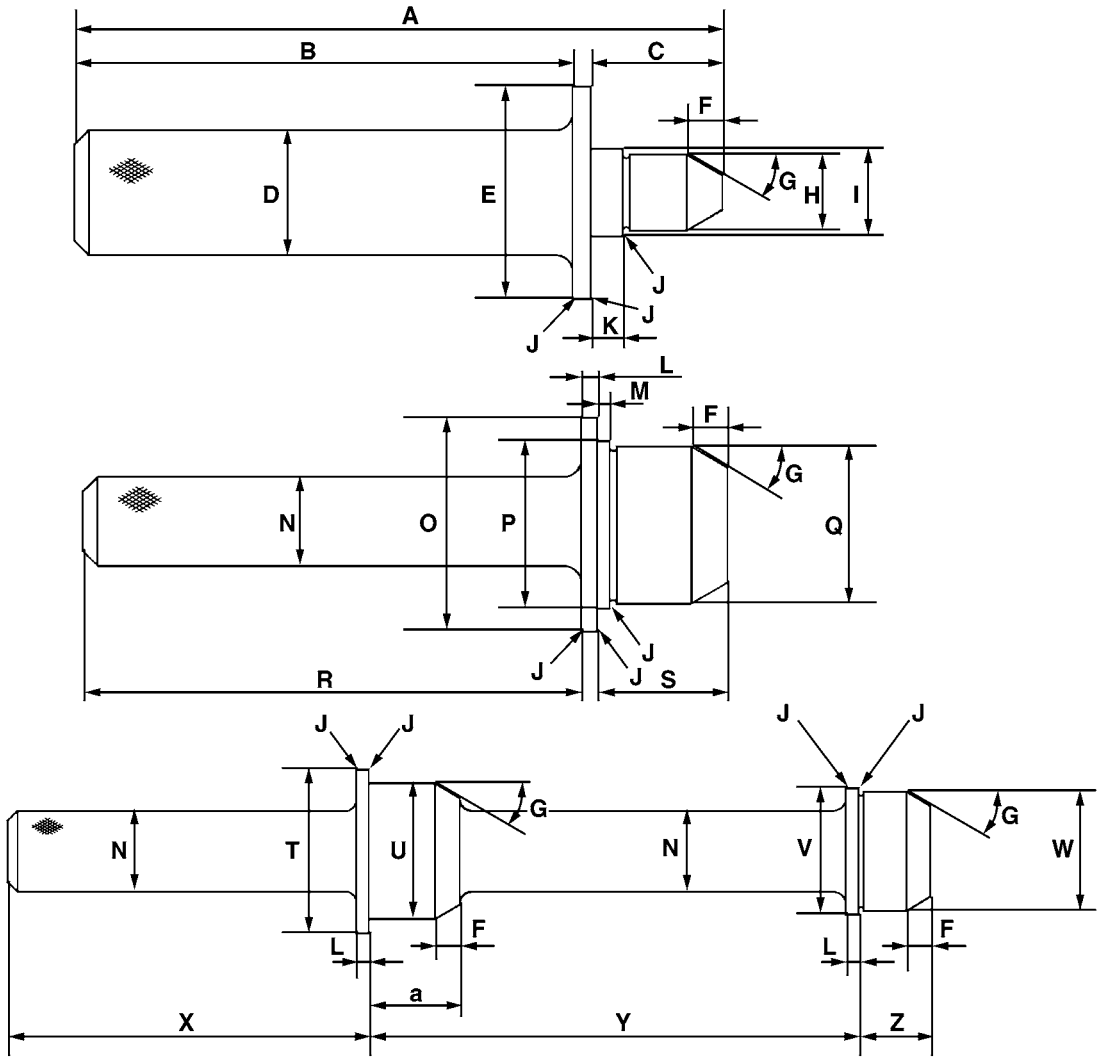

3TMABAB0P070B

A	182 mm (7.17 in.)	O	60 mm dia. (2.4 in. dia.)
B	140 mm (5.51 in.)	P	46.950 to 46.975 mm dia. (1.8485 to 1.8494 in. dia.)
C	37 mm (1.5 in.)	Q	43.934 to 43.950 mm dia. (1.7297 to 1.7303 in. dia.)
D	35 mm dia. (1.4 in. dia.)	R	140 mm (5.51 in.)
E	60 mm dia. (2.4 in. dia.)	S	36 mm (1.4 in.)
F	10 mm (0.39 in.)	T	60 mm dia. (2.4 in. dia.)
G	0.52 rad (30 °)	U	46.950 to 46.975 mm dia. (1.8485 to 1.8494 in. dia.)
H	21.947 to 21.960 mm dia. (0.86406 to 0.86456 in. dia.)	V	44.950 to 44.975 mm dia. (1.7697 to 1.7706 in. dia.)
I	24.959 to 24.980 mm dia. (0.98264 to 0.98346 in. dia.)	W	41.934 to 41.950 mm dia. (1.6510 to 1.6515 in. dia.)
J	Chamfer 0.3 mm (0.01 in.)	X	145 mm (5.71 in.)
K	8.8 to 9.2 mm (0.35 to 0.36 in.)	Y	195.25 to 195.75 mm (7.6870 to 7.7066 in.)
L	5 mm (0.2 in.)	Z	29 mm (1.1 in.)
M	3.3 to 3.7 mm (0.13 to 0.14 in.)	a	36 mm (1.4 in.)
N	25 mm dia. (0.98 in. dia.)		

https://truckmanualshub.com/

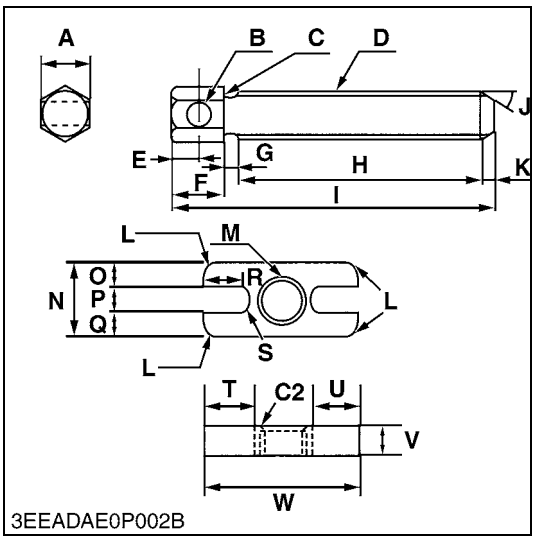

Idle Gear 2 Puller

Application: Use for remove the idle gear 2 from the shaft.

A	24 mm (0.94 in.)
B	10 mm dia. (0.39 in. dia.)
C	0.5 mm radius (0.02 in. radius)
D	M20 x Pitch 2.0
E	10 mm (0.39 in.)
F	20 mm (0.79 in.)
G	5 mm (0.2 in.)
H	95 mm (3.7 in.)
I	125 mm (4.92 in.)
J	0.87 rad (50 °)
K	5 mm (0.2 in.)
L	60 mm radius (2.4 in. radius)
M	M20 x Pitch 2.0
N	30 mm (1.2 in.)
O	10 mm (0.39 in.)
P	10 mm (0.39 in.)
Q	10 mm (0.39 in.)
R	35.5 mm (1.40 in.)
S	4.5 mm radius (0.18 in. radius)
T	40 mm (1.6 in.)
U	40 mm (1.6 in.)
V	12 mm (0.47 in.)
W	120 mm (4.72 in.)
C2	Chamfer 2.0 mm (0.079 in.)

W1028521

https://truckmanualshub.com/

MECHANISM

CONTENTS

1. ENGINE BODY M-1
   [1] PISTON M-1
   [2] BUILT-IN DYNAMIC BALANCER (BALANCER MODEL ONLY) M-2
   [3] HALF-FLOATING HEAD COVER M-3
2. COOLING SYSTEM M-4
   [1] BOTTOM BYPASS SYSTEM M-4
3. FUEL SYSTEM M-5
   [1] GOVERNOR M-5
4. TURBOCHARGER SYSTEM M-6
   [1] BOOST COMPENSATOR M-6

https://truckmanualshub.com/

1. ENGINE BODY

[1] PISTON

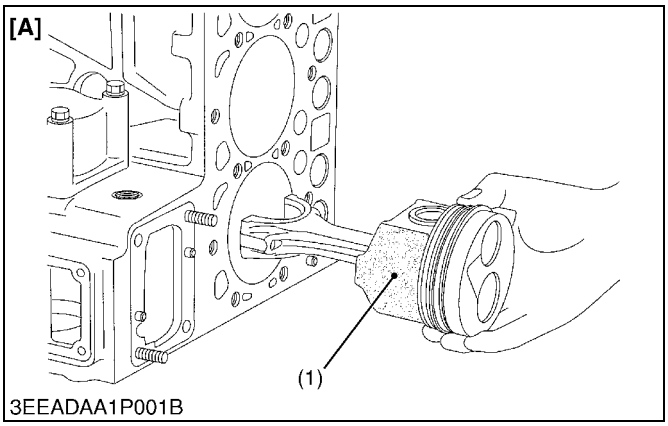

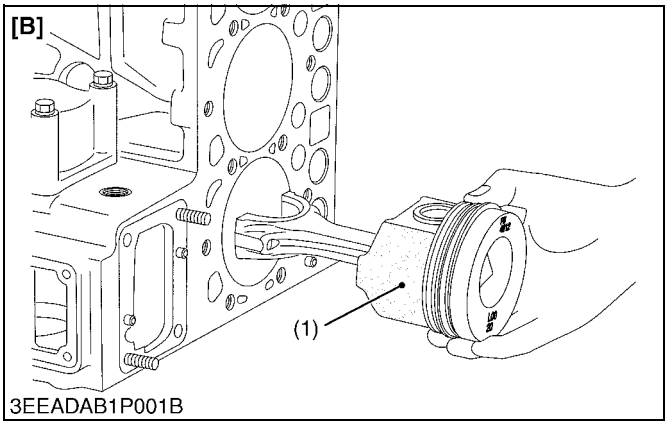

Piston's skirt is coated with **molybdenum disulfide★**, which reduces the piston slap noise and thus the entire operating noise.

★Molybdenum disulfide (MoS_2)

The molybdenum disulfide (1) serves as a solid lubricant, like a Graphite or Teflon. This material helps resist metal wears even with little lube oil.

(1) Molybdenum Disulfide

[A] D1503-M, D1703-M
D1803-M, V2003-M
V2203-M, V2403-M
V2403-M-T
D1703-M-BG, V2003-M-BG
V2003-M-T-BG, V2203-M-BG
V2403-M-BG
[B] D1803-M-DI, V2403-M-DI
V2403-M-DI-T

W1013114

https://truckmanualshub.com/

[2] BUILT-IN DYNAMIC BALANCER (BALANCER MODEL ONLY)

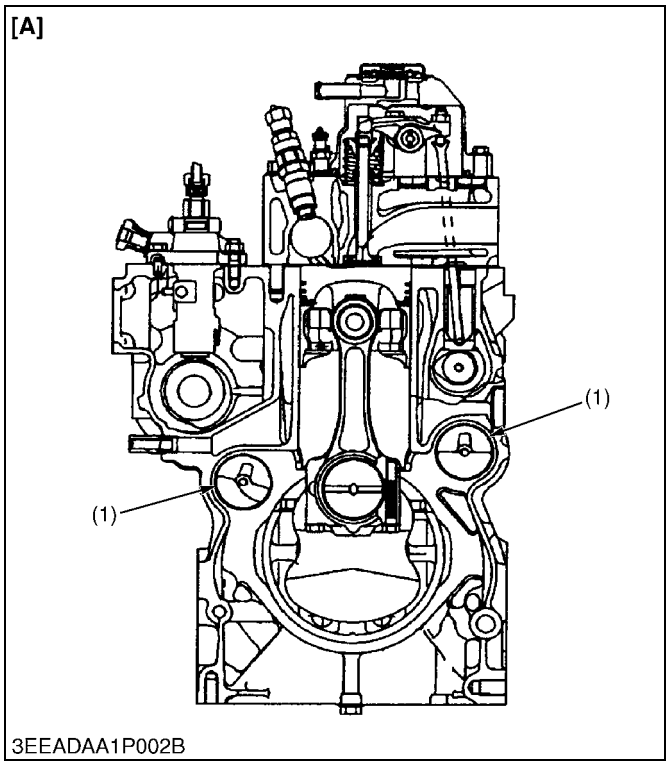

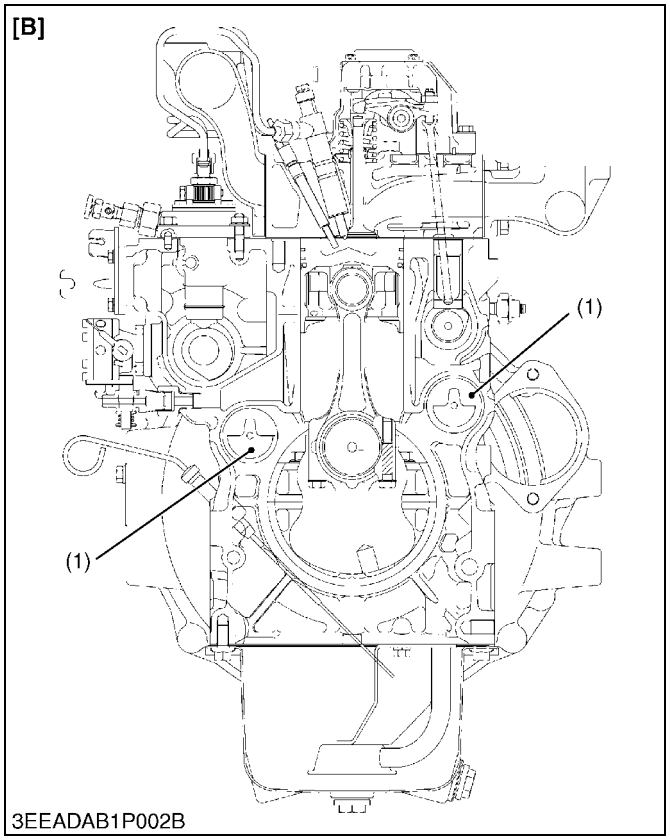

Engine are sure to vibrate by piston's reciprocation. Theoretically, three-cylinder engines are much less prone to cause vibration than four-cylinder ones (second inertia, etc.). However, any engine has many moving parts in addition to its pistons and cannot be completely free from vibration.

The four cylinders engine can be fitted with balance weight on crankcase to absorb the second inertia mentioned above and reduce vibration.

This engine is internally provide with two balancers (1), one at the suction side and the other at the exhaust side.

(1) Balancer

[A] D1503-M, D1703-M
D1803-M, V2003-M
V2203-M, V2403-M
V2403-M-T
[B] D1803-M-DI, V2403-M-DI
V2403-M-DI-T

W1013221

https://truckmanualshub.com/

[3] HALF-FLOATING HEAD COVER

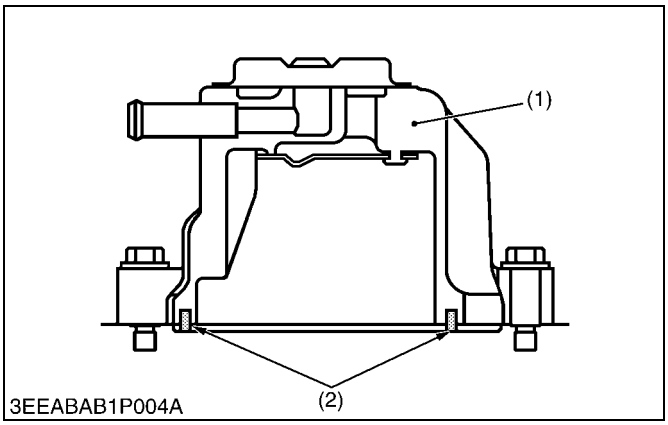

The rubber packing is fitted in to maintain the cylinder head cover 0.5 mm (0.02 in.) or so off the cylinder head. This arrangement helps reduce noise coming from the cylinder head.

(1) Cylinder Head Cover (2) Rubber Packing

W1013327

https://truckmanualshub.com/

2. COOLING SYSTEM

[1] BOTTOM BYPASS SYSTEM

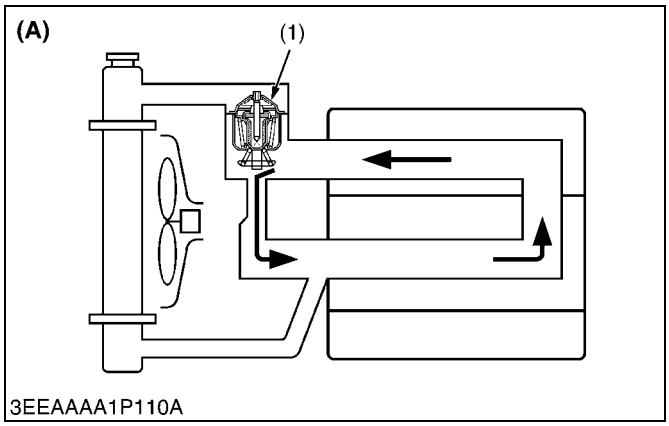

3EEAAAA1P110A

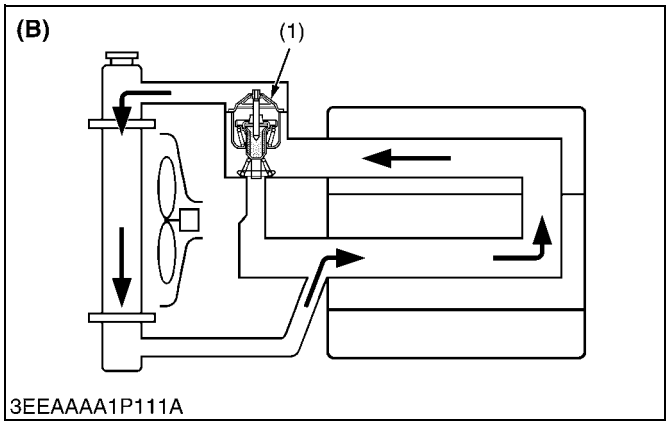

3EEAAAA1P111A

Bottom bypass system is introduced in 03-M Series for improving the cooling performance of the radiator.

While the temperature of coolant in the engine is low, the thermostat (1) is held closed and the coolant is allowed to flow through the bypass pipe and to circulate in the engine.

When the temperature exceeds the thermostat valve opening level, the thermostat (1) fully opens itself to prevent the hot coolant from flowing through the bypass into the engine.

In this way, the radiator can increase its cooling performance.

(1) Thermostat

(A) Bypass Opened
(B) Bypass Closed

W1013406

https://truckmanualshub.com/

3. FUEL SYSTEM

[1] GOVERNOR

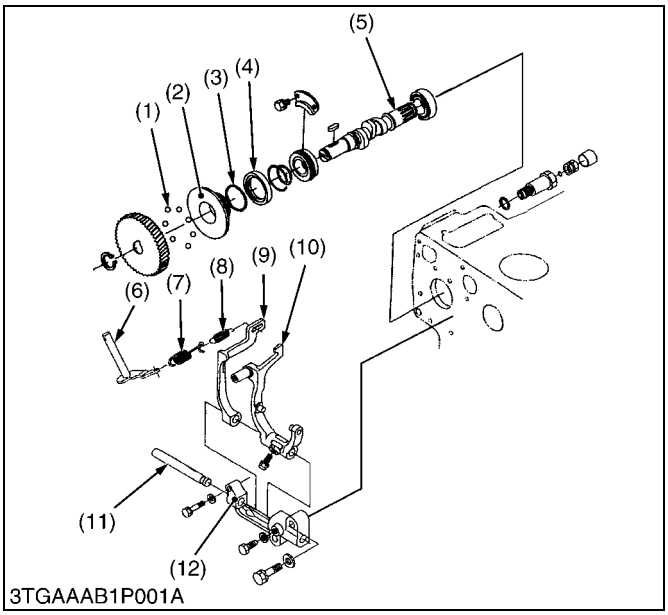

The governor serves to keep engine speed constant by automatically adjusting the amount of fuel supplied to the engine according to changes in the load. This engine employs an all-speed governor which controls the centrifugal force of the steel ball (1) weight, produced by rotation of the fuel camshaft (5), and the tension of the governor spring 1 (7) and 2 (8) are balanced.

(1) Steel Ball	(7) Governor Spring 1
(2) Governor Sleeve	(8) Governor Spring 2
(3) Steel Ball	(9) Fork Lever 2
(4) Governor Ball Case	(10) Fork Lever 1
(5) Fuel Camshaft	(11) Fork Lever Shaft
(6) Governor Lever	(12) Fork Lever Holder

W1017186

https://truckmanualshub.com/

4. TURBOCHARGER SYSTEM

[1] BOOST COMPENSATOR

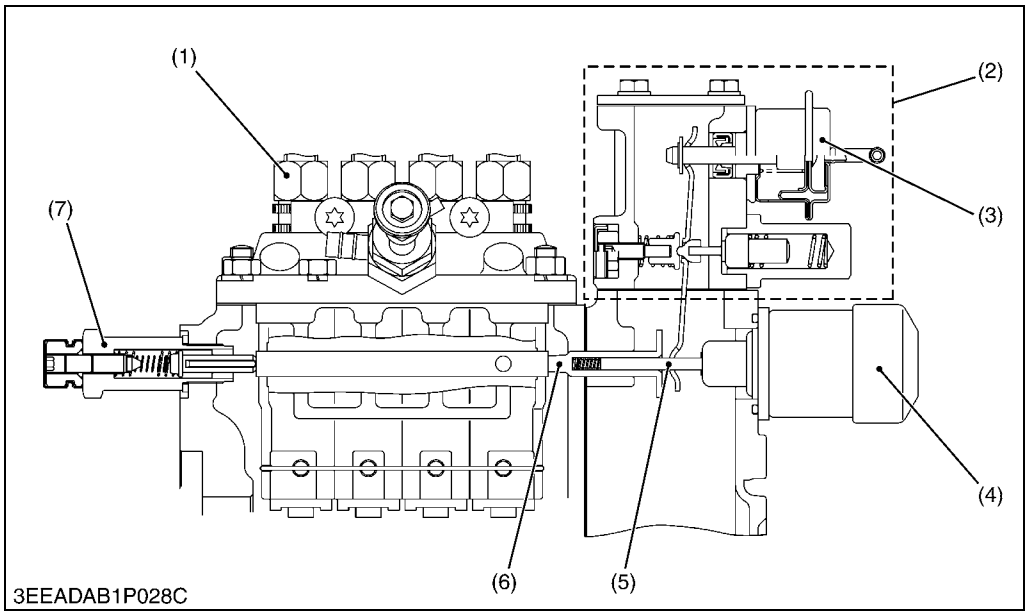

(1) Injection Pump Assembly
(2) Boost Compensator Assembly
(3) Actuator
(4) Solenoid
(5) Plunger
(6) Solenoid Guide
(7) Hi-Idling Body

W1014318

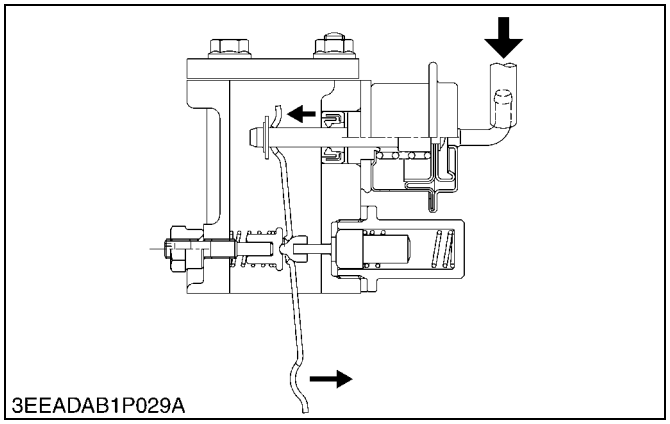

The higher the boost pressure rises, the more fuel is fed. In this way, the turbocharger proves itself for high-power performance.

W1014402

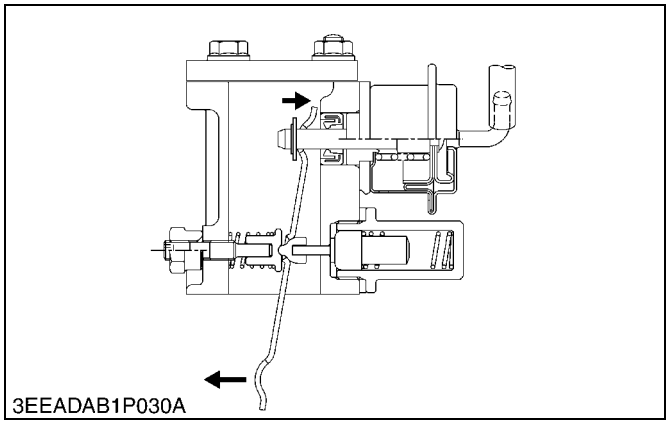

When the boost pressure drops, excess fuel is cut down, allowing much less black emission.

The system is tremendously efficient in cutting down on the emission; under low boost pressures at quick speed-up or start-up, in particular.

W1014432

https://truckmanualshub.com/

SERVICING

CONTENTS

1. TROUBLESHOOTING S-1
   [1] ENGINE BODY S-1
   [2] ELECTRONIC GOVERNOR S-5
2. SERVICING SPECIFICATIONS S-7
3. TIGHTENING TORQUES S-19
   [1] TIGHTENING TORQUES FOR GENERAL USE SCREWS, BOLTS AND NUTS S-19
   [2] TIGHTENING TORQUES FOR SPECIAL USE SCREWS, BOLTS AND NUTS S-20
4. CHECKING, DISASSEMBLING AND SERVICING S-21
   [1] CHECKING AND ADJUSTING S-21
      (1) Engine Body S-21
      (2) Lubricating System S-24
      (3) Cooling System S-24
      (4) Fuel System S-27
      (5) Electrical System S-36
      (6) Turbocharger S-40
      (7) Electronic Governor S-41
   [2] DISASSEMBLING AND ASSEMBLING S-46
      (1) Draining Oil and Coolant S-46
      (2) External Components S-46
      (3) Cylinder Head and Valves S-48
      (4) Gear Case and Timing Gears S-54
      (5) Piston and Connecting Rod S-63
      (6) Flywheel and Crankshaft S-68
      (7) Starter S-71
      (8) Alternator S-72
   [3] SERVICING S-73
      (1) Cylinder Head and Valves S-73
      (2) Timing Gears S-81
      (3) Piston and Connecting Rod S-86
      (4) Crankshaft S-90
      (5) Cylinder S-95
      (6) Oil Pump S-97
      (7) Starter S-97
      (8) Alternator S-101

https://truckmanualshub.com/

1. TROUBLESHOOTING

[1] ENGINE BODY

Symptom	Probable Cause	Solution	Reference Page
Engine Does Not Start	No fuel	Replenish fuel	G-12
	Air in the fuel system	Vent air	G-12
	Water in the fuel system	Change fuel and repair or replace fuel system	–
	Fuel hose clogged	Clean or replace	G-12
	Fuel filter clogged	Replace	G-22
	Excessively high viscosity of fuel or engine oil at low temperature	Use specified fuel or engine oil	5 to 15, G-10
	Fuel with low cetane number	Use specified fuel	5 to 15
	Fuel leak due to loose injection pipe retaining nut	Tighten retaining nut	S-48
	Incorrect injection timing	Adjust	S-27, 28
	Fuel camshaft worn	Replace	S-62
	Injection nozzle clogged	Clean or replace (IDI) Repair or replace (DI)	S-33, 34, 35, 49 S-33, 34, 35, 49
	Injection pump malfunctioning	Repair or replace	S-29, 30, 31, 32, 54, 55
	Seizure of crankshaft, camshaft, piston, cylinder or bearing	Repair or replace	S-61 to 67 S-90 to 96
	Compression leak from cylinder	Replace head gasket, tighten cylinder head screw, glow plug and nozzle holder	S-49, 50, 51, 52
	Improper valve timing	Correct or replace timing gear	S-60, 61
	Piston ring and cylinder worn	Replace	S-21, 22, 64 to 67, 88, 89, 95
	Excessive valve clearance	Adjust	S-23
	Solenoid malfunctioning	Replace	S-40, 54, 55
Starter Does Not Run	Battery discharged	Charge	G-25, 26
	Starter malfunctioning	Repair or replace	S-38, 46, 71, 97
	Key switch malfunctioning	Replace	–
	Wiring disconnected	Connect	–

W1114419

https://truckmanualshub.com/

Symptom	Probable Cause	Solution	Reference Page
Engine Revolution Is Not Smooth	Fuel filter clogged or dirty	Replace	G-22
	Air cleaner clogged	Clean or replace	G-13, 20, 26
	Fuel leak due to loose injection pipe retaining nut	Tighten retaining nut	S-48
	Injection pump malfunctioning	Repair or replace	S-29, 30, 31, 32, 54, 55
	Incorrect nozzle opening pressure	Adjust (IDI) Repair or replace (DI)	S-34, 49 S-34, 49
	Injection nozzle stuck or clogged	Repair or replace	S-34, 49
	Governor malfunctioning	Repair	S-56, 57, 62
	Turbocharger bearing worn out	Replace the turbocharger assembly	S-47
	Turbocharger shaft bent	Replace the turbocharger assembly	S-47
	Turbocharger fin or other part damaged due to foreign matters	Replace the turbocharger assembly	S-47
Either White or Blue Exhaust Gas Is Observed	Excessive engine oil	Reduce to specified level	G-8
	Piston ring and cylinder worn or stuck	Repair or replace	S-21, 22, 64 to 67, 88, 89, 95
	Incorrect injection timing	Adjust	S-27, 28
Oil Leak into Exhaust Pipe or Suction Pipe	Oil pipe clogged or deformed	Repair or replace	S-47
	Turbocharger's piston ring seal faulty	Replace the turbocharger assembly	S-47
Either Black or Dark Gray Exhaust Gas Is Observed	Overload	Reduce the load	–
	Low grade fuel used	Use specified fuel	5 to 15
	Fuel filter clogged	Replace	G-22
	Air cleaner clogged	Clean or replace	G-13, 20, 26
	Deficient nozzle injection	Repair or replace nozzle	S-33, 34, 35, 49

W1011567

https://truckmanualshub.com/

Symptom	Probable Cause	Solution	Reference Page
Deficient Output	Incorrect injection timing	Adjust	S-27, 28
	Engine's moving parts seem to be seizing	Repair or replace	–
	Injection pump malfunctioning	Repair or replace	S-29, 30, 31, 32, 54, 55
	Deficient nozzle injection	Repair or replace nozzle	S-33, 34, 35, 49
	Compression leak	Check the compression pressure and repair	S-21, 22
	Gas leak from exhaust system	Repair or replace	S-40, 47
	Air leak from compressor discharge side	Repair or replace	S-40, 47
	Air cleaner dirty or clogged	Clean or replace	G-13, 20, 26
	Turbocharger compressor wheel turning heavily	Replace the turbocharger assembly	S-47
Excessive Lubricant Oil Consumption	Piston ring's gap facing the same direction	Shift ring gap direction	S-64, 65
	Oil ring worn or stuck	Replace	S-66, 67, 88, 89
	Piston ring groove worn	Replace piston	S-66, 67, 89
	Valve stem and valve guide worn	Replace	S-53, 76
	Crankshaft bearing, and crank pin bearing worn	Replace	S-64, 65, 70, 91, 92, 93
	Oil leaking due to defective seals or packing	Replace	–
Fuel Mixed into Lubricant Oil	Injection pump's plunger worn	Repair or replace	S-29, 30, 31, 32, 54, 55
	Deficient nozzle injection	Repair or replace nozzle	S-33, 34, 35, 49
	Injection pump broken	Replace	S-54, 55
Water Mixed into Lubricant Oil	Head gasket defective	Replace	S-51, 52
	Cylinder block or cylinder head flawed	Replace	S-51, 74

W1012032

https://truckmanualshub.com/

Symptom	Probable Cause	Solution	Reference Page
Low Oil Pressure	Engine oil insufficient	Replenish	G-8
	Oil strainer clogged	Clean	S-63
	Relief valve stuck with dirt	Clean	–
	Relief valve spring weaken or broken	Replace	–
	Excessive oil clearance of crankshaft bearing	Replace	S-70, 92, 93
	Excessive oil clearance of crankpin bearing	Replace	S-64, 65, 91
	Excessive oil clearance of rocker arm	Replace	S-50, 80
	Oil passage clogged	Clean	–
	Different type of oil	Use specified type of oil	5 to 15, G-10
	Oil pump defective	Replace	S-24, 62, 97
High Oil Pressure	Different type of oil	Use specified type of oil	5 to 15, G-10
	Relief valve defective	Replace	–
Engine overheated	Engine oil insufficient	Replenish	G-10
	Fan belt broken or elongated	Replace or adjust	G-14, 24
	Coolant insufficient	Replenish	G-9
	Radiator net and radiator fin clogged with dust	Clean	–
	Inside of radiator corroded	Clean or replace	G-23
	Coolant flow route corroded	Clean or replace	G-23, 24
	Radiator cap defective	Replace	S-25
	Overload running	Reduce the load	–
	Head gasket defective	Replace	S-51, 52
	Incorrect injection timing	Adjust	S-27, 28
	Unsuitable fuel used	Use specified fuel	5 to 15
Battery Quickly Discharged	Battery electrolyte insufficient	Replenish distilled water and charge	G-13, 25
	Fan belt slips	Adjust belt tension or replace	G-13, 14, 24
	Wiring disconnected	Connect	–
	Rectifier defective	Replace	S-72, 102
	Alternator defective	Replace	S-72, 101
	Battery defective	Replace	–

W1012501

https://truckmanualshub.com/

[2] ELECTRONIC GOVERNOR

■ **IMPORTANT**

- **The engine trouble divides into an electronic governor, the main body of the engine, and the operating constancy.**
  This manual describes it concerning the check of an electronic governor.
  Refer to WSM of engine and operator's manual if you cannot find trouble related to an electronic governor by checking an electronic governor.

Engine will not start.

Cause	Corrections	Refer to Checking
Starter Operating but Not Cranking the Engine	Check operation of the solenoid	Solenoid
	Check harness of the solenoid	Solenoid
	Check harness of the glow plug	Glow plug
Starter Does Not Operate	Check emergency stop switch	Emergency stop switch

W1039573

Engine stopped automatically. Engine can be started again and stops again 10 seconds later.

Cause	Corrections	Refer to Checking
Trouble in the electronic governor composition parts	Check blinking pattern of the glow lamp (1)	Signal pattern sheet (1) Glow Lamp

W1041393

Engine speed cannot be controlled.

Cause	Corrections	Refer to Checking
Engine speed does not increase/ decrease	Check slow down switch	Slow down switch
	Check speed switch	Speed switch
	Check operation of the solenoid	Solenoid
	Check harness of speed sensor	Harness
Engine runs rough	Check operation of the solenoid	Solenoid
	Check harness of speed sensor	Harness

W1041483

https://truckmanualshub.com/

Blinking Pattern of Glow Lamp	Cause	Refer to Checking
(1-Long and 1-Short) 3EEAAAB1P005A	Overrunning (more than 115 %)	Solenoid
(1-Long and 2-Short) 3EEAAAB1P006A	Low oil pressure	Oil sensor
(1-Long and 3-Short) 3EEAAAB1P007A	Defect of alternator	Alternator
(1-Long and 4-Short) 3EEAAAB1P008A	Coolant temperature is abnormal	Water temperature sensor
(1-Long and 5-Short) 3EEAAAB1P009A	Emergency stop switch operated	Emergency stop switch
(2-Long and 1-Short) 3EEAAAB1P010A	Abnormality of speed sensor	Speed sensor
(2-Long and 2-Short) 3EEAAAB1P011A	Solenoid malfunction	Solenoid
(2-Long and 4-Short) 3EEAAAB1P012A	Disconnection of water temperature sensor	Water temperature sensor
(2-Long and 5-Short) 3EEAAAB1P013A	Short circuit of water temperature sensor	Water temperature sensor
(2-Long and 6-Short) 3EEAAAB1P014A	Disconnection of alternator **L** Terminal	Alternator **L** Terminal

W1042224

https://truckmanualshub.com/

2. SERVICING SPECIFICATIONS

ENGINE BODY

Item		Factory Specification	Allowable Limit
Valve Clearance (When Cold)		0.18 to 0.22 mm 0.0071 to 0.0086 in.	–
Compression Pressure (When Cranking with Starting Motor) **[D1503-M], [D1703-M]** **[D1803-M], [V2003-M]** **[V2203-M], [V2403-M]** **[V2403-M-T]** **[D1703-M-BG], [V2003-M-BG]** **[V2003-M-T-BG], [V2203-M-BG]** **[V2403-M-BG]**		3.24 to 3.72 MPa / 290 min^{-1} (rpm) 33.0 to 38.0 kgf/cm^2 / 290 min^{-1} (rpm) 470 to 540 psi / 290 min^{-1} (rpm)	2.55 MPa / 290 min^{-1} (rpm) 26.0 kgf/cm^2 / 290 min^{-1} (rpm) 370 psi / 290 min^{-1} (rpm)
Compression Pressure (When Cranking with Starting Motor) **[D1803-M-DI], [V2403-M-DI]** **[V2403-M-DI-T]** Difference among Cylinders		2.95 to 3.23 MPa / 290 min^{-1} (rpm) 30.0 to 33.0 kgf/cm^2 / 290 min^{-1} (rpm) 427 to 469 psi / 290 min^{-1} (rpm) –	2.35 MPa / 290 min^{-1} (rpm) 24.0 kgf/cm^2 / 290 min^{-1} (rpm) 341 psi / 290 min^{-1} (rpm) 10 % or less
Top Clearance **[D1503-M], [D1703-M]** **[D1803-M], [V2003-M]** **[V2203-M], [V2403-M]** **[V2403-M-T]** **[D1703-M-BG], [V2003-M-BG]** **[V2003-M-T-BG], [V2203-M-BG]** **[V2403-M-BG]**		0.575 to 0.675 mm 0.0227 to 0.0265 in.	–
Top Clearance **[D1803-M-DI], [V2403-M-DI]** **[V2403-M-DI-T]**		0.60 to 0.70 mm 0.024 to 0.027 in.	–
Cylinder Head Surface	Flatness	–	0.05 mm / 500 mm 0.002 in. / 19.7 in.
Valve Recessing (Protrusion to Recessing) **[D1503-M], [D1703-M]** **[D1803-M], [V2003-M]** **[V2203-M], [V2403-M]** **[V2403-M-T]** **[D1703-M-BG], [V2003-M-BG]** **[V2003-M-T-BG], [V2203-M-BG]** **[V2403-M-BG]**	Protrusion Recessing	0.05 mm 0.002 in. 0.15 mm 0.0059 in.	– 0.40 mm 0.016 in.
Valve Recessing **[D1803-M-DI], [V2403-M-DI]** **[V2403-M-DI-T]**	Recessing	0.65 to 0.85 mm 0.026 to 0.033 in.	–

W1116131

https://truckmanualshub.com/

ENGINE BODY (Continued)

Item		Factory Specification	Allowable Limit
Valve Stem to Valve Guide	Clearance	0.040 to 0.070 mm 0.0016 to 0.0027 in.	0.10 mm 0.0039 in.
Valve Stem	O.D.	7.960 to 7.975 mm 0.3134 to 0.3139 in.	–
Valve Guide	I.D.	8.015 to 8.030 mm 0.3156 to 0.3161 in.	–
Valve Face **[D1503-M], [D1703-M]** **[D1803-M], [V2003-M]** **[V2203-M], [V2403-M]** **[V2403-M-T]** **[D1703-M-BG], [V2003-M-BG]** **[V2003-M-T-BG], [V2203-M-BG]** **[V2403-M-BG]**	Angle (Intake)	1.0 rad 60 °	–
	Angle (Exhaust)	0.79 rad 45 °	–
Valve Face **[D1803-M-DI], [V2403-M-DI]** **[V2403-M-DI-T]**	Angle (Intake)	0.79 rad 45 °	–
	Angle (Exhaust)	0.79 rad 45 °	–
Valve Seat	Width (Intake)	2.12 mm 0.0835 in.	–
	Width (Exhaust)	2.12 mm 0.0835 in.	–
Valve Seat **[D1503-M], [D1703-M]** **[D1803-M], [V2003-M]** **[V2203-M], [V2403-M]** **[V2403-M-T]** **[D1703-M-BG], [V2003-M-BG]** **[V2003-M-T-BG], [V2203-M-BG]** **[V2403-M-BG]**	Angle (Intake)	1.0 rad 60 °	–
	Angle (Exhaust)	0.79 rad 45 °	–
Valve Seat **[D1803-M-DI], [V2403-M-DI]** **[V2403-M-DI-T]**	Angle (Intake)	0.79 rad 45 °	–
	Angle (Exhaust)	0.79 rad 45 °	–
Valve Timing (Intake Valve) **[D1503-M]** **[D1703-M-BG]**	Open	0.1 rad (8 °) before T.D.C.	–
	Close	0.35 rad (20 °) after B.D.C.	–
Valve Timing (Intake Valve) **[D1703-M], [D1803-M]** **[V2003-M], [V2203-M]** **[V2403-M], [V2403-M-DI-T]** **[V2003-M-BG], [V2203-M-BG]** **[V2403-M-BG]**	Open	0.21 rad (12 °) before T.D.C.	–
	Close	0.63 rad (36 °) after B.D.C.	–

W1014004

https://truckmanualshub.com/

ENGINE BODY (Continued)

Item		Factory Specification	Allowable Limit
Valve Timing (Intake Valve) **[V2403-M-T]** **[V2003-M-T-BG]**	Open Close	0.35 rad (20 °) before T.D.C. 0.79 rad (45 °) after B.D.C.	– –
Valve Timing (Intake Valve) **[D1803-M-DI]** **[V2403-M-DI]**	Open Close	0.2 rad (9 °) before T.D.C. 0.68 rad (39 °) after B.D.C.	– –
Valve Timing (Exhaust Valve) **[D1503-M]** **[V2003-M]**	Open Close	1.0 rad (60 °) before B.D.C. 0.21 rad (12 °) after T.D.C.	– –
Valve Timing (Exhaust Valve) **[D1703-M], [D1803-M]** **[V2203-M], [V2403-M]** **[V2403-M-BG]**	Open Close	0.99 rad (57 °) before B.D.C. 0.21 rad (12 °) after T.D.C.	– –
Valve Timing (Exhaust Valve) **[V2403-M-T]** **[V2403-M-DI-T]** **[D1703-M-BG]** **[V2003-M-BG]** **[V2203-M-BG]**	Open Close	0.87 rad (50 °) before B.D.C. 0 rad (0 °) after T.D.C.	– –
Valve Timing (Exhaust Valve) **[D1803-M-DI]** **[V2403-M-DI]**	Open Close	0.72 rad (41 °) before B.D.C. 0.2 rad (9 °) after T.D.C.	– –
Valve Timing (Exhaust Valve) **[V2003-M-T-BG]**	Open Close	0.96 rad (55 °) before B.D.C. 0.24 rad (14 °) after T.D.C.	– –
Valve Spring	Free Length Setting Load / Setting Length Tilt	41.7 to 42.2 mm 1.65 to 1.66 in. 118 N / 35.0 mm 12.0 kgf / 35.0 mm 26.5 lbf / 1.38 in. –	41.2 mm 1.62 in. 100 N / 35.0 mm 10.2 kgf / 35.0 mm 22.5 lbf /1.38 in. 1.0 mm 0.039 in.

W1014959

https://truckmanualshub.com/

ENGINE BODY (Continued)

Item		Factory Specification	Allowable Limit
Rocker Arm Shaft to Rocker Arm	Oil Clearance	0.016 to 0.045 mm 0.00063 to 0.0017 in.	0.10 mm 0.0039 in.
Rocker Arm Shaft	O.D.	13.973 to 13.984 mm 0.55012 to 0.55055 in.	–
Rocker Arm	I.D.	14.000 to 14.018 mm 0.55119 to 0.55188 in.	–
Push Rod	Alignment	–	0.25 mm 0.0098 in.
Tappet to Tappet Guide	Oil Clearance	0.020 to 0.062 mm 0.00079 to 0.0024 in.	0.07 mm 0.003 in.
Tappet	O.D.	23.959 to 23.980 mm 0.94327 to 0.94409 in.	–
Tappet Guide	I.D.	24.000 to 24.021 mm 0.94489 to 0.94570 in.	–
Timing Gear Crank Gear to Idle Gear	Backlash	0.04150 to 0.1122 mm 0.001634 to 0.004417 in.	0.15 mm 0.0059 in.
Idle Gear to Cam Gear	Backlash	0.04150 to 0.1154 mm 0.001634 to 0.004543 in.	0.15 mm 0.0059 in.
Idle Gear to Injection Pump Gear	Backlash	0.04150 to 0.1154 mm 0.001634 to 0.004543 in.	0.15 mm 0.0059 in.
Crank Gear to Oil Pump Gear	Backlash	0.04150 to 0.1090 mm 0.001634 to 0.004291 in.	0.15 mm 0.0059 in.
Idle Gear to Balancer Gear (Balancer Model Only)	Backlash	0.03500 to 0.1160 mm 0.001378 to 0.004566 in.	0.15 mm 0.0059 in.
Cam Gear to Balancer Gear (Balancer Model Only)	Backlash	0.03500 to 0.1160 mm 0.001378 to 0.004566 in.	0.15 mm 0.0059 in.
Crank Gear to Idle Gear 2 (Side PTO Model Only)	Backlash	0.04150 to 0.1154 mm 0.001634 to 0.004543 in.	0.15 mm 0.0059 in.
Idle Gear 2 to Hydraulic Pump Drive Gear (Side PTO Model Only)	Backlash	0.03080 to 0.1062 mm 0.001213 to 0.004181 in.	0.15 mm 0.0059 in.
Idle Gear	Side Clearance	0.12 to 0.48 mm 0.0048 to 0.018 in.	0.9 mm 0.04 in.
Idle Gear Shaft to Idle Gear Bushing	Oil Clearance	0.025 to 0.066 mm 0.00099 to 0.0025 in.	0.10 mm 0.0039 in.
Idle Gear Shaft	O.D.	37.959 to 37.975 mm 1.4945 to 1.4950 in.	–
Idle Gear Bushing	I.D.	38.000 to 38.025 mm 1.4961 to 1.4970 in.	–

W1015276

https://truckmanualshub.com/

ENGINE BODY (Continued)

Item		Factory Specification	Allowable Limit
Camshaft	Side Clearance	0.070 to 0.22 mm 0.0028 to 0.0086 in.	0.30 mm 0.012 in.
Camshaft	Alignment	–	0.01 mm 0.0004 in.
Cam (Intake) **[D1503-M]** **[D1703-M-BG]** **[V2003-M]** **[V2403-M-DI-T]** **[V2003-M-BG]** **[V2203-M-BG]** **[D1703-M], [D1803-M]** **[V2203-M], [V2403-M]** **[V2403-M-T]** **[D1803-M-DI], [V2403-M-DI]** **[V2003-M-T-BG]** **[V2403-M-BG]**	Height	 33.27 mm 1.310 in. 33.47 mm 1.318 in. 33.90 mm 1.335 in.	 33.22 mm 1.308 in. 33.42 mm 1.316 in. 33.85 mm 1.333 in.
Cam (Exhaust) **[V2403-M-DI-T]** **[V2403-M-T]** **[D1703-M-BG], [V2003-M-BG]** **[V2203-M-BG]** **[D1503-M], [D2003-M]** **[V2003-M-T-BG]** **[D1703-M], [D1803-M]** **[V2203-M], [V2403-M]** **[V1803-M-DI], [V2403-M-DI]** **[V2403-M-BG]**	Height	 33.00 mm 1.299 in. 33.27 mm 1.310 in. 33.47 mm 1.318 in. 33.90 mm 1.335 in.	 33.95 mm 1.297 in. 33.22 mm 1.308 in. 33.42 mm 1.316 in. 33.85 mm 1.333 in.
Camshaft Journal to Cylinder Block Bore Camshaft Journal Cylinder Block Bore	Oil Clearance O.D. I.D.	0.050 to 0.091 mm 0.0020 to 0.0035 in. 39.934 to 39.950 mm 1.5722 to 1.5728 in. 40.000 to 40.025 mm 1.5748 to 1.5757 in.	0.15 mm 0.0059 in. – –
Balancer Shaft (Balancer Model Only)	Side Clearance	0.070 to 0.22 mm 0.0028 to 0.0086 in.	0.30 mm 0.012 in.
Balancer Shaft (Balancer Model Only)	Alignment	–	0.02 mm 0.0008 in.

W1117772

https://truckmanualshub.com/

ENGINE BODY (Continued)

Item		Factory Specification	Allowable Limit
Balancer Shaft Journal 1 to Balancer Shaft Bearing 1 (Balancer Model Only)	Oil Clearance	0.0300 to 0.111 mm 0.00119 to 0.00437 in.	0.20 mm 0.0079 in.
Balancer Shaft Journal 1	O.D.	43.934 to 43.950 mm 1.7297 to 1.7303 in.	–
Balancer Shaft Bearing 1	I.D.	43.980 to 44.045 mm 1.7315 to 1.7340 in.	–
Balancer Shaft Journal 2 to Balancer Shaft Bearing 2 (Balancer Model Only)	Oil Clearance	0.0300 to 0.111 mm 0.00119 to 0.00437 in.	0.20 mm 0.0079 in.
Balancer Shaft Journal 2	O.D.	41.934 to 41.950 mm 1.6509 to 1.6515 in.	–
Balancer Shaft Bearing 2	I.D.	41.980 to 42.045 mm 1.6528 to 1.6553 in.	–
Balancer Shaft Journal 3 to Balancer Shaft Bearing 3 (Balancer Model Only)	Oil Clearance	0.020 to 0.094 mm 0.00079 to 0.0037 in.	0.20 mm 0.0079 in.
Balancer Shaft Journal 3	O.D.	21.947 to 21.960 mm 0.86406 to 0.86456 in.	–
Balancer Shaft Bearing 3	I.D.	21.980 to 22.041 mm 0.86536 to 0.86775 in.	–
Piston Pin Bore	I.D.	25.000 to 25.013 mm 0.98426 to 0.98476 in.	25.05 mm 0.9862 in.
Top Ring to Ring Groove **[D1803-M-DI]** **[V2403-M-DI]**	Clearance	0.050 to 0.090 mm 0.0020 to 0.0035 in.	0.20 mm 0.0079 in.
Second Ring to Ring Groove **[D1503-M], [D1703-M]** **[D1803-M], [V2003-M]** **[V2203-M], [V2403-M]** **[V2403-M-T], [V2403-M-DI-T]** **[D1703-M-BG], [V2003-M-BG]** **[V2003-M-T-BG], [V2203-M-BG]** **[V2403-M-BG]**	Clearance	0.0930 to 0.128 mm 0.00367 to 0.00503 in.	0.20 mm 0.0079 in.
Second Ring to Ring Groove **[D1803-M-DI], [V2403-M-DI]**	Clearance	0.0780 to 0.110 mm 0.00307 to 0.00433 in.	0.20 mm 0.0079 in.
Oil Ring to Ring Groove **[D1503-M], [D1703-M]** **[D1803-M], [V2003-M]** **[V2203-M], [V2403-M]** **[V2403-M-T], [V2403-M-DI-T]** **[D1703-M-BG], [V2003-M-BG]** **[V2003-M-T-BG], [V2203-M-BG]** **[V2403-M-BG]**	Clearance	0.020 to 0.060 mm 0.00079 to 0.0023 in.	0.15 mm 0.0059 in.
Oil Ring to Ring Groove **[D1803-M-DI], [V2403-M-DI]**	Clearance	0.030 to 0.070 mm 0.0012 to 0.0027 in.	0.15 mm 0.0059 in.

W1119370

https://truckmanualshub.com/

ENGINE BODY (Continued)

Item		Factory Specification	Allowable Limit
Top Ring **[D1503-M], [V2003-M], [V2403-M-T]** **[D1803-M-DI], [V2403-M-DI]** **[V2403-M-DI-T]** **[V2003-M-BG], [V2003-M-T-BG],**	Ring Gap	0.20 to 0.35 mm 0.0079 to 0.013 in.	1.25 mm 0.0492 in.
Top Ring **[D1703-M], [D1803-M]** **[V2203-M], [V2403-M]** **[D1703-M-BG], [V2203-M-BG]** **[V2403-M-BG]**	Ring Gap	0.25 to 0.40 mm 0.0099 to 0.015 in.	1.25 mm 0.0492 in.
Second Ring **[D1503-M], [D1703-M]** **[D1803-M], [V2203-M]** **[V2403-M]** **[D1803-M-DI], [V2403-M-DI]** **[D1703-M-BG], [V2003-M-BG]** **[V2203-M-BG], [V2403-M-BG]**	Ring Gap	0.30 to 0.45 mm 0.012 to 0.017 in.	1.25 mm 0.0492 in.
Second Ring **[V2003-M], [V2403-M-T]**, **[V2403-M-DI-T]** **[V2003-M-T-BG]**	Ring Gap	0.40 to 0.55 mm 0.016 to 0.021 in.	1.25 mm 0.0492 in.
Oil Ring **[D1503-M], [D1703-M]** **[D1803-M], [V2003-M]** **[V2203-M], [V2403-M], [V2403-M-T]** **[V2403-M-DI-T]** **[D1703-M-BG], [V2003-M-BG]** **[V2003-M-T-BG], [V2203-M-BG]** **[V2403-M-BG]**	Ring Gap	0.25 to 0.45 mm 0.0099 to 0.017 in.	1.25 mm 0.0492 in.
Oil Ring **[D1803-M-DI], [V2403-M-DI]**	Ring Gap	0.20 to 0.40 mm 0.0079 to 0.015 in.	1.25 mm 0.0492 in.
Connecting Rod	Alignment	–	0.05 mm 0.002 in.
Piston Pin to Small End Bushing	Oil Clearance	0.014 to 0.036 mm 0.00056 to 0.0014 in.	0.15 mm 0.0059 in.
Piston Pin	O.D.	25.004 to 25.011 mm 0.98441 to 0.98468 in.	–
Small End Bushing	I.D.	25.025 to 25.040 mm 0.98524 to 0.98582 in.	–
Crankshaft	Alignment	–	0.02 mm 0.0008 in.
Crankshaft Journal to Crankshaft Bearing 1	Oil Clearance	0.0400 to 0.118 mm 0.00158 to 0.00464 in.	0.20 mm 0.0079 in.
Crankshaft Journal	O.D.	59.921 to 59.940 mm 2.3591 to 2.3598 in.	–
Crankshaft Bearing 1	I.D.	59.980 to 60.039 mm 2.3615 to 2.3637 in.	–

W1086708

https://truckmanualshub.com/

ENGINE BODY (Continued)

Item		Factory Specification	Allowable Limit
Crankshaft Journal to Crankshaft Bearing 2	Oil Clearance	0.0400 to 0.104 mm 0.00158 to 0.00409 in.	0.20 mm 0.0079 in.
Crankshaft Journal	O.D.	59.921 to 59.940 mm 2.3591 to 2.3598 in.	–
Crankshaft Bearing 2	I.D.	59.980 to 60.025 mm 2.3615 to 2.3631 in.	–
Crankpin to Crankpin Bearing	Oil Clearance	0.025 to 0.087 mm 0.00099 to 0.0034 in.	0.20 mm 0.0079 in.
Crankpin	O.D.	46.959 to 46.975 mm 1.8488 to 1.8494 in.	–
Crankpin Bearing	I.D.	47.000 to 47.046 mm 1.8504 to 1.8522 in.	–
Crankshaft	Side Clearance	0.15 to 0.31 mm 0.0059 to 0.012 in.	0.5 mm 0.02 in.
Cylinder Bore (Standard) **[D1503-M], [V2003-M]** **[V2003-M-BG], [V2003-M-T-BG]**	I.D.	83.000 to 83.022 mm 3.2678 to 3.2685 in.	83.170 mm 3.2744 in.
Cylinder Bore (Standard) **[D1703-M], [D1803-M]** **[V2203-M], [V2403-M], [V2403-M-T]** **[D1803-M-DI], [V2403-M-DI]** **[V2403-M-DI-T]** **[D1703-M-BG], [V2203-M-BG]** **[V2403-M-BG]**	I.D.	87.000 to 87.022 mm 3.4252 to 3.4260 in.	87.170 mm 3.4319 in.
Cylinder Bore (Oversize) **[D1503-M], [V2003-M]** **[V2003-M-BG], [V2003-M-T-BG]**	I.D.	83.250 to 83.272 mm 3.2776 to 3.2784 in.	83.420 mm 3.2843 in.
Cylinder Bore (Oversize) **[D1703-M], [D1803-M]** **[V2203-M], [V2403-M], [V2403-M-T]** **[D1803-M-DI], [V2403-M-DI]** **[V2403-M-DI-T]** **[D1703-M-BG], [V2203-M-BG]** **[V2403-M-BG]**	I.D.	87.250 to 87.272 mm 3.4351 to 3.4359 in.	87.420 mm 3.4417 in.
Difference among Minimum Wear to Maximum Wear		–	0.15 mm 0.0059 in.

W1054843

https://truckmanualshub.com/

LUBRICATING SYSTEM

Item		Factory Specification	Allowable Limit
Engine Oil Pressure	At Idle Speed	More than 98 kPa 1.0 kgf/cm^2 14 psi	50 kPa 0.5 kgf/cm^2 7 psi
	At Rated Speed	300 to 440 kPa 3.0 to 4.5 kgf/cm^2 43 to 64 psi	250 kPa 2.5 kgf/cm^2 36 psi
Engine Oil Pressure Switch	Working Pressure	50 kPa 0.5 kgf/cm^2 7 psi	–
Inner Rotor to Outer Rotor	Clearance	0.030 to 0.14 mm 0.0012 to 0.0055 in.	0.2 mm 0.008 in.
Outer Rotor to Pump Body	Clearance	0.11 to 0.19 mm 0.0044 to 0.0074 in.	0.25 mm 0.0098 in.
Inner Rotor to Cover	Clearance	0.105 to 0.150 mm 0.00414 to 0.00590 in.	0.20 mm 0.008 in.

W1120963

COOLING SYSTEM

Fan Belt	Tension	7.0 to 9.0 mm (0.28 to 0.35 in.) deflection at 98 N (10 kgf, 22 lbf) of force	–
Thermostat **[D1503-M], [D1703-M]** **[D1803-M], [V2003-M]** **[V2203-M], [V2403-M]** **[V2403-M-T]** **[D1703-M-BG], [V2003-M-BG]** **[V2003-M-T-BG], [V2203-M-BG]** **[V2403-M-BG]**	Valve Opening Temperature (At Beginning)	69.5 to 72.5 °C 157.1 to 162.5 °F	–
	Valve Opening Temperature (Opened Completely)	85 °C 185 °F	–
Thermostat **[D1803-M-DI], [V2403-M-DI]** **[V2403-M-DI-T]**	Valve Opening Temperature (At Beginning)	80.5 to 83.5 °C 176.9 to 182.3 °F	–
	Valve Opening Temperature (Opened Completely)	95 °C 203 °F	–
Radiator	Water Tightness	No leak at specified pressure	–
Radiator Cap	Pressure Falling Time	More than 10 seconds for pressure fall from 90 to 60 kPa from 0.9 to 0.6 kgf/cm^2 from 10 to 9 psi	–

W1122456

https://truckmanualshub.com/

FUEL SYSTEM

Item		Factory Specification	Allowable Limit
Injection Pump **[D1503-M], [V2003-M-T-BG]**	Injection Timing	0.253 to 0.279 rad (14.5 to 16.0 °) before T.D.C.	–
Injection Pump **[D1703-M], [D1803-M]** **[V2003-M], [V2203-M]** **[V2403-M]**	Injection Timing	0.271 to 0.296 rad (15.5 to 17.0 °) before T.D.C.	–
Injection Pump **[V2403-M-T]**	Injection Timing	0.132 to 0.157 rad (7.55 to 9.05 °) before T.D.C.	–
Injection Pump **[D1803-M-DI], [V2403-M-DI]**	Injection Timing	0.0742 to 0.100 rad (4.25 to 5.75 °) before T.D.C.	–
Injection Pump **[V2403-M-DI-T]**	Injection Timing	0.0829 to 0.109 rad (4.75 to 6.25 °) before T.D.C.	–
Injection Pump **[D1703-M-BG], [V2003-M-BG]** **[V2203-M-BG], [V2403-M-BG]**	Injection Timing	0.236 to 0.261 rad (13.5 to 15.0 °) before T.D.C.	–
Pump Element **[D1503-M], [D1703-M]** **[D1803-M], [V2003-M]** **[V2203-M], [V2403-M]** **[V2403-M-T]** **[D1703-M-BG], [V2003-M-BG]** **[V2003-M-T-BG], [V2203-M-BG]** **[V2403-M-BG]**	Fuel Tightness	–	13.73 MPa 140.0 kgf/cm^2 1991 psi
Pump Element **[D1803-M-DI], [V2403-M-DI]** **[V2403-M-DI-T]**	Fuel Tightness	–	18.63 MPa 190.0 kgf/cm^2 2702 psi
Delivery Valve **[D1503-M], [D1703-M]** **[D1803-M], [V2003-M]** **[V2203-M], [V2403-M]** **[V2403-M-T]** **[D1703-M-BG], [V2003-M-BG]** **[V2003-M-T-BG], [V2203-M-BG]** **[V2403-M-BG]**	Fuel Tightness	10 seconds 13.73 → 12.75 MPa 140.0 → 130.0 kgf/cm^2 1991 → 1849 psi	5 seconds 13.73 → 12.75 MPa 140.0 → 130.0 kgf/cm^2 1991 → 1849 psi
Delivery Valve **[D1803-M-DI], [V2403-M-DI]** **[V2403-M-DI-T]**	Fuel Tightness	10 seconds 18.63 → 17.65 MPa 190.0 → 180.0 kgf/cm^2 2702 → 2560 psi	5 seconds 18.63 → 17.65 MPa 190.0 → 180.0 kgf/cm^2 2702 → 2560 psi

W1123952

https://truckmanualshub.com/

FUEL SYSTEM (Continued)

Item		Factory Specification	Allowable Limit
Injection Nozzle **[D1503-M], [D1703-M]** **[D1803-M], [V2003-M]** **[V2203-M], [V2403-M]** **[V2403-M-T]** **[D1703-M-BG], [V2003-M-BG]** **[V2003-M-T-BG], [V2203-M-BG]** **[V2403-M-BG]**	Injection Pressure	13.73 to 14.70 MPa 140.0 to 150.0 kgf/cm^2 1992 to 2133 psi	–
Injection Nozzle **[D1803-M-DI], [V2403-M-DI]** **[V2403-M-DI-T]**	Injection Pressure (1st stage)	18.64 to 20.10 MPa 190.0 to 205.0 kgf/cm^2 2703 to 2915 psi	–
Injection Nozzle Valve Seat **[D1503-M], [D1703-M]** **[D1803-M], [V2003-M]** **[V2203-M], [V2403-M]** **[V2403-M-T]** **[D1703-M-BG], [V2003-M-BG]** **[V2003-M-T-BG], [V2203-M-BG]** **[V2403-M-BG]**	Valve Seat Tightness	When the pressure is 12.75 MPa (130.0 kgf/cm^2, 1849 psi), the valve seat must be fuel tightness.	–
Injection Nozzle Valve Seat **[D1803-M-DI], [V2403-M-DI]** **[V2403-M-DI-T]**	Valve Seat Tightness	When the pressure is 16.67 MPa (170.0 kgf/cm^2, 2418 psi), the valve seat must be fuel tightness.	–

W1041294

https://truckmanualshub.com/

ELECTRICAL SYSTEM

Item		Factory Specification	Allowable Limit
Starter			
Commutator **[D1503-M], [D1703-M]** **[V2003-M], [V2203-M]** **[D1803-M-DI]** **[D1703-M-BG], [V2003-M-BG]** **[V2003-M-T-BG], [V2203-M-BG]**	O.D.	30.0 mm 1.18 in.	29.0 mm 1.14 in.
Commutator **[D1803-M], [V2403-M]** **[V2403-M-DI], [V2403-M-T]** **[V2403-M-DI-T]** **[V2403-M-BG]**	O.D.	35.0 mm 1.38 in.	34.0 mm 1.34 in.
Mica **[D1503-M], [D1703-M]** **[D1803-M], [V2003-M]** **[V2203-M], [V2403-M]** **[V2403-M-T]** **[D1803-M-DI], [V2403-M-DI]** **[V2403-M-DI-T]** **[D1703-M-BG], [V2003-M-BG]** **[V2003-M-T-BG], [V2203-M-BG]**	Under Cut	0.45 to 0.75 mm 0.018 to 0.029 in.	0.20 mm 0.0079 in.
Mica **[V2403-M-BG]**	Under Cut	0.55 to 0.85 mm 0.022 to 0.033 in.	0.20 mm 0.0079 in.
Brush **[D1503-M], [D1703-M]** **[V2003-M], [V2203-M]** **[D1803-M-DI]** **[D1703-M-BG], [V2003-M-BG]** **[V2003-M-T-BG], [V2203-M-BG]**	Length	15.0 mm 0.591 in.	11.0 mm 0.433 in.
Brush **[D1803-M], [V2403-M]** **[V2403-M-DI], [V2403-M-T]** **[V2403-M-DI-T]**	Length	15.0 mm 0.591 in.	9.0 mm 0.35 in.
Brush **[V2403-M-BG]**	Length	15.0 mm 0.591 in.	12.0 mm 0.472 in.
Brush Holder and Holder Support	Resistance	Infinity	–
Alternator	No-load voltage	More than 13.5 V	–
Stator	Resistance	Less than 1.0 Ω	–
Rotor	Resistance	2.9 Ω	–
Slip Ring	O.D.	14.4 mm 0.567 in.	14.0 mm 0.551 in.
Brush	Length	10.5 mm 0.413 in.	8.4 mm 0.33 in.
Glow Plug	Resistance	Approx. 0.9 Ω	–

W1125417

https://truckmanualshub.com/

3. TIGHTENING TORQUES

Screws, bolts and nuts must be tightened to the specified torque using a torque wrench, several screws, bolts and nuts such as those used on the cylinder head must be tightened in proper sequence and the proper torque.

[1] TIGHTENING TORQUES FOR GENERAL USE SCREWS, BOLTS AND NUTS

When the tightening torques are not specified, tighten the screws, bolts and nuts according to the table below.

Grade / Nominal Diameter / Unit	Standard Screw and Bolt 4			Special Screw and Bolt 7		
	N·m	kgf·m	lbf·ft	N·m	kgf·m	lbf·ft
M6	7.9 to 9.3	0.80 to 0.95	5.8 to 6.8	9.81 to 11.2	1.00 to 1.15	7.24 to 8.31
M8	18 to 20	1.8 to 2.1	13 to 15	24 to 27	2.4 to 2.8	18 to 20
M10	40 to 45	4.0 to 4.6	29 to 33	49 to 55	5.0 to 5.7	37 to 41
M12	63 to 72	6.4 to 7.4	47 to 53	78 to 90	7.9 to 9.2	58 to 66

W10371750

Screw and bolt material grades are shown by numbers punched on the screw and bolt heads. Prior to tightening, be sure to check out the numbers as shown below.

Punched number	Screw and bolt material grade
None or 4	Standard screw and bolt SS41, S20C
7	Special screw and bolt S43C, S48C (Refined)

W1012705

https://truckmanualshub.com/

[2] TIGHTENING TORQUES FOR SPECIAL USE SCREWS, BOLTS AND NUTS

■ **NOTE**

- **For "*" marked screws, bolts and nuts on the table, apply engine oil to their threads and seats before tightening.**
- **The letter "M" in Size x Pitch means that the screw, bolt or nut dimension stands for metric. The size is the nominal outside diameter in mm of the threads. The pitch is the nominal distance in mm between two threads.**

Item	Size x Pitch	N·m	kgf·m	lbf·ft
Cylinder head cover screw	M6 x 1.0	9.81 to 11.2	1.00 to 1.15	7.24 to 8.31
*Cylinder head screw	M11 x 1.25	93.2 to 98.0	9.50 to 10.0	68.8 to 72.3
*Main bearing case screw 1	M9 x 1.25	46 to 50	4.7 to 5.2	34 to 37
*Main bearing case screw 2	M10 x 1.25	69 to 73	7.0 to 7.5	51 to 54
*Flywheel screw	M12 x 1.25	98.1 to 107	10.0 to 11.0	72.4 to 79.5
*Connecting rod screw	M8 x 1.0	45 to 49	4.5 to 5.0	33 to 36
*Rocker arm bracket screw	M8 x 1.25	24 to 27	2.4 to 2.8	18 to 20
*Idle gear shaft screw	M8 x 1.25	24 to 27	2.4 to 2.8	18 to 20
Fan drive pulley mounting nut	M30 x 1.5	138 to 156	14.0 to 16.0	102 to 115
*Bearing case cover mounting screw	M8 x 1.25	24 to 27	2.4 to 2.8	18 to 20
Glow plug	M10 x 1.25	20 to 24	2.0 to 2.5	15 to 18
Nozzle holder assembly (IDI)	M20 x 1.5	49 to 68	5.0 to 7.0	37 to 50
Nozzle holder (IDI)	–	35 to 39	3.5 to 4.0	26 to 28
Nozzle holder clamp screw (DI)	M10 x 1.25	26 to 29	2.6 to 3.0	19 to 21
Oil pressure switch	R 1/8	15 to 19	1.5 to 2.0	11 to 14
Injection pipe retaining nut (IDI)	M12 x 1.5	25 to 34	2.5 to 3.5	18 to 25
Injection pipe retaining nut (DI)	M12 x 1.5	15 to 24	1.5 to 2.5	11 to 18
Overflow pipe assembly retaining nut (IDI)	M12 x 1.5	20 to 24	2.0 to 2.5	15 to 18
Overflow pipe assembly retaining screw (DI)	M6 x 1.0	9.81 to 11.2	1.00 to 1.15	7.24 to 8.31
Camshaft set screw	M8 x 1.25	24 to 27	2.4 to 2.8	18 to 20
Hi-idling body	M14 x 1.0	45 to 49	4.5 to 5.0	33 to 36
Balancer shaft set bolt (Balancer model only)	M8 x 1.25	24 to 27	2.4 to 2.8	18 to 20
Alternator's pulley nut	–	58.4 to 78.9	5.95 to 8.05	43.1 to 58.2
Idle gear 2 stopper set screw (Side PTO model only)	–	49 to 55	5.0 to 5.7	37 to 41
Idle gear 2 shaft set screw (Side PTO model only)	–	24 to 27	2.4 to 2.8	18 to 20
Starter's terminal **B** mounting nut	M8	5.9 to 11	0.60 to 1.2	4.4 to 8.6

IDI : D1503-M, D1703-M, D1803-M, V2003-M, V2203-M, V2403-M, V2403-M-T
D1703-M-BG, V2003-M-BG, V2003-M-T-BG, V2203-M-BG, V2403-M-BG
DI : D1803-M-DI, V2403-M-DI, V2403-M-DI-T

W1013236

https://truckmanualshub.com/

4. CHECKING, DISASSEMBLING AND SERVICING

[1] CHECKING AND ADJUSTING

(1) Engine Body

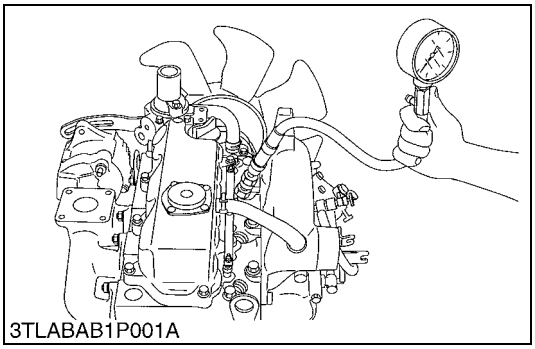
3TLABAB1P001A

Compression Pressure

[D1503-M, D1703-M, D1803-M, V2003-M, V2203-M, V2403-M, V2403-M-T]
[D1703-M-BG, V2003-M-BG, V2003-M-T-BG, V2203-M-BG, V2403-M-BG]

1. Run the engine until it is warmed up.
2. Stop the engine and disconnect the **2P** connector from the stop solenoid in order not to inject fuel.
3. Remove the air cleaner, the muffler and all injection nozzles.
4. Set a compression tester with the adaptor to the nozzle hole.
5. After making sure that the stop lever is set at the stop position (non-injection).
6. While cranking the engine with the starter, measure the compression pressure.
7. Repeat steps 4 through 6 for each cylinder.
8. If the measurement is below the allowable limit, apply a small amount of oil to the cylinder wall through the nozzle hole and measure the compression pressure again.
9. If the compression pressure is still less than the allowable limit, check the top clearance, valve and cylinder head.
10. If the compression pressure increases after applying oil, check the cylinder wall and piston rings.

■ **NOTE**

- **Check the compression pressure with the specified valve clearance.**
- **Always use a fully charged battery for performing this test.**
- **Variances in cylinder compression values should be under 10 %.**

Compression pressure	Factory spec.	3.24 to 3.72 MPa 33.0 to 38.0 kgf/cm^2 470 to 540 psi
	Allowable limit	2.55 MPa 26.0 kgf/cm^2 370 psi

W1018639

https://truckmanualshub.com/

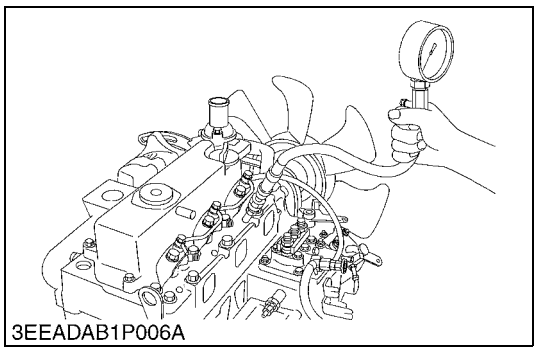
3EEADAB1P006A

Compression Pressure

[D1803-M-DI, V2403-M-DI, V2403-M-DI-T]

1. Run the engine until it is warmed up.
2. Stop the engine and disconnect the **2P** connector from the stop solenoid in order not to inject fuel.
3. Remove the air cleaner, the muffler and all glow plugs.
4. Set a compression tester (07909-39081) with the adaptor **K** (07909-31291) to the glow plug hole.
5. While cranking the engine with the starter, measure the compression pressure.
6. Repeat steps 4 through 5 for each cylinder.

■ **NOTE**

- **Check the compression pressure with the specified valve clearance.**
- **Always use a fully charged battery for performing this test.**
- **Variances in cylinder compression values should be under 10 %.**

Compression pressure	Factory spec.	2.95 to 3.23 MPa 30.0 to 33.0 kgf/cm^2 427 to 469 psi
	Allowable limit	2.35 MPa 24.0 kgf/cm^2 341 psi

W1111297

https://truckmanualshub.com/

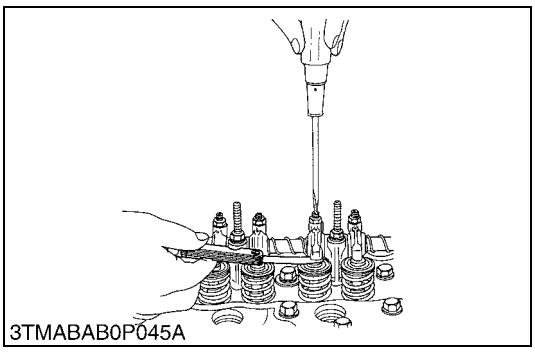
3TMABAB0P045A

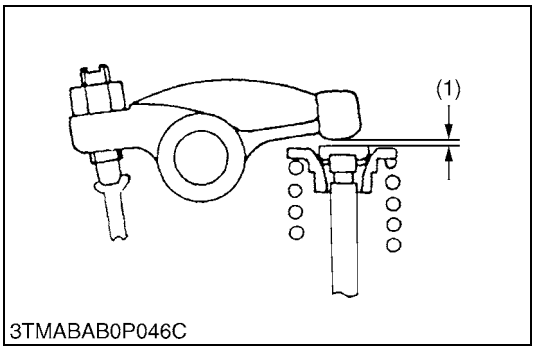

3TMABAB0P046C

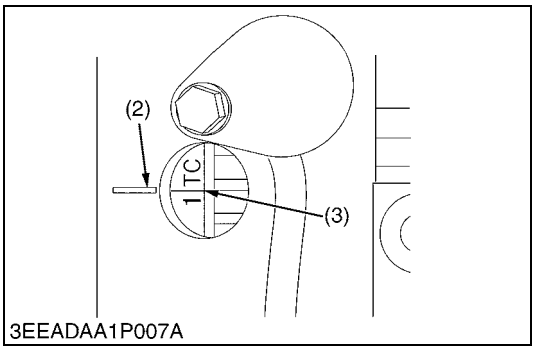

3EEADAA1P007A

Valve Clearance

■ **IMPORTANT**

- **Valve clearance must be checked and adjusted when engine is cold.**

1. Remove the head cover.
2. Align the **"1TC"** mark line (3) on the flywheel and projection (2) on the housing so that the No.1 piston comes to the compression or overlap top dead center.
3. Check the following valve clearance (1) marked with "☆" using a feeler gauge.
4. If the clearance is not within the factory specifications, adjust with the adjusting screw.

Valve clearance	Factory spec.	0.18 to 0.22 mm 0.0071 to 0.0086 in.

■ **NOTE**

- **The "1TC" mark line on the flywheel is just for No. 1 cylinder. There is no "TC" marking for the other cylinders.**
- **No. 1 piston comes to the top dead center position when the "TC" marking is aligned with the projection (2) in the window on flywheel-housing. Turn the flywheel 0.26 rad (15 °) clockwise and counterclockwise to see if the piston is at the compression top dead center or the overlap position. Now referring to the table below, readjust the valve clearance (1). (The piston is at the top dead center when both the IN. and EX. valves do not move; it is at the overlap position when both the valves move.)**
- **Finally turn the flywheel 6.28 rad (360 °) and align the "1TC" mark line and the projection (2) perfectly. Adjust all the other valve clearance as required.**
- **After turning the flywheel counterclockwise twice or three times, recheck the valve clearance (1).**
- **After adjusting the valve clearance (1), firmly tighten the lock nut of the adjusting screw.**

Valve arrangement / Adjustable cylinder location of piston		3 Cylinder		4 Cylinder	
		IN.	EX.	IN.	EX.
When No. 1 piston is at compression top dead center	No. 1	☆	☆	☆	☆
	No. 2		☆	☆	
	No. 3	☆			☆
	No. 4	–	–		
When No. 1 piston is at overlap position	No. 1				
	No. 2	☆			☆
	No. 3		☆	☆	
	No. 4	–	–	☆	☆

(1) Valve Clearance
(2) Projection
(3) 1TC Mark Line

W10379490

https://truckmanualshub.com/

(2) Lubricating System

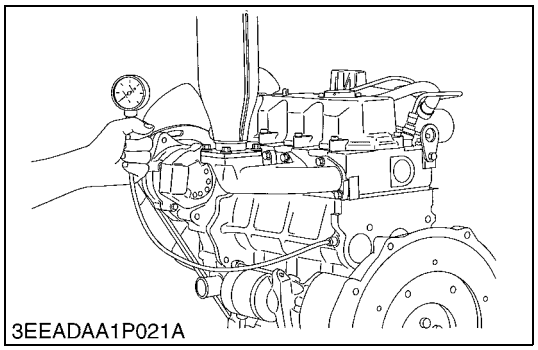
3EEADAA1P021A

Engine Oil Pressure

1. Remove the engine oil pressure switch, and set an oil pressure tester (Code No.: 07916-32032). (Adaptor screw size : PT 1/8)
2. Start the engine. After warming up, measure the oil pressure of both idling and rated speeds.
3. If the oil pressure is less than the allowable limit, check the following.

- Engine oil insufficient.
- Oil pump defective
- Oil strainer clogged
- Oil filter cartridge clogged
- Oil gallery clogged
- Excessive oil clearance
- Foreign matter in the relief valve

Engine oil pressure	At idle speed	Factory spec.	More than 98 kPa 1.0 kgf/cm^2 14 psi
		Allowable limit	50 kPa 0.5 kgf/cm^2 7 psi
	At rated speed	Factory spec.	300 to 440 kPa 3.0 to 4.5 kgf/cm^2 43 to 64 psi
		Allowable limit	250 kPa 2.5 kgf/cm^2 36 psi

(When reassembling)

- After checking the engine oil pressure, tighten the engine oil pressure switch to the specified torque.

Tightening torque	Oil pressure switch	15 to 19 N·m 1.5 to 2.0 kgf·m 11 to 14 lbf·ft

W1034952

(3) Cooling System

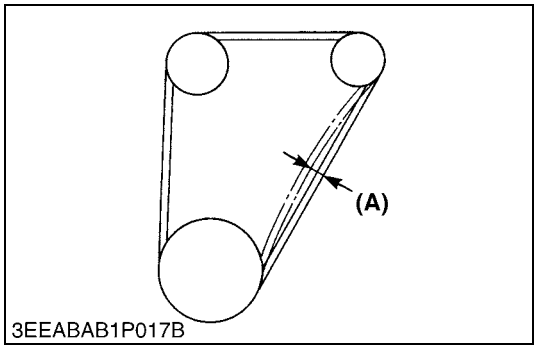

3EEABAB1P017B

Fan Belt Tension

1. Measure the deflection **(A)**, depressing the belt halfway between the fan drive pulley and alternator pulley at specified force 98 N (10 kgf, 22 lbf).
2. If the measurement is not within the factory specifications, loosen the alternator mounting screws and relocate the alternator to adjust.

Deflection **(A)**	Factory spec.	7.0 to 9.0 mm 0.28 to 0.35 in.

(A) Deflection

W10356670

https://truckmanualshub.com/

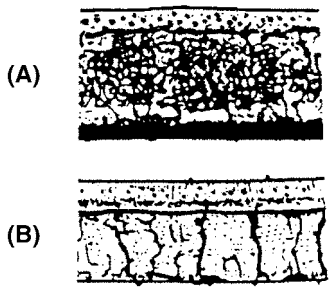

3EEABAB1P019B

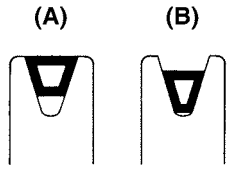

3EEABAB1P018A

Fan Belt Damage and Wear

1. Check the fan belt for damage.
2. If the fan belt is damaged, replace it.
3. Check if the fan belt is worn and sunk in the pulley groove.
4. If the fan belt is nearly worn out and deeply sunk in the pulley groove, replace it.

(A) Good **(B) Bad**

W1020602

CAUTION

- **When removing the radiator cap, wait at least ten minutes after the engine has stopped and cooled down. Otherwise, hot water may gush out, scalding nearby people.**

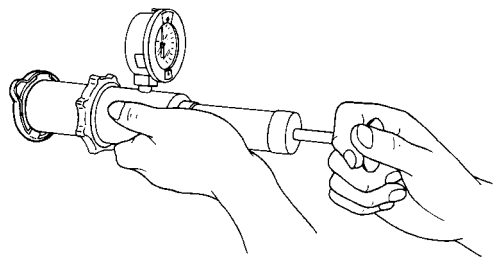
3EEABAB1P162A

Radiator Cap Air Leakage

1. Set a radiator tester and an adaptor on the radiator cap.
2. Apply the specified pressure 90 kPa (0.9 kgf/cm^2, 10 psi), and measure the time for the pressure to fall to 60 kPa (0.6 kgf/cm^2, 9 psi).
3. If the measurement is less than the factory specification, replace the radiator cap.

Pressure falling time	Factory spec.	More than 10 seconds for pressure fall from 90 to 60 kPa (from 0.9 to 0.6 kgf/cm^2, from 10 to 9 psi)

W10387530

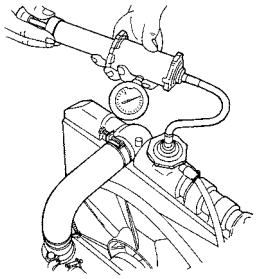
3EEABAB1P161A

Radiator Water Leakage

1. Pour a specified amount of water into the radiator.
2. Set a radiator tester and an adaptor and raise the water pressure to the specified pressure.
3. Check the radiator for water leaks.
4. For water leak from the pinhole, replace the radiator or repair with the radiator cement. When water leak is excessive, replace the radiator.

Radiator water leakage test pressure	Factory spec.	No leak at specified pressure

■ **NOTE**

- **The pressure of the leak test is different from each radiator specification.**
  Thus, do the leak test, refer to the test pressure of each radiator specification.

W10389070

https://truckmanualshub.com/

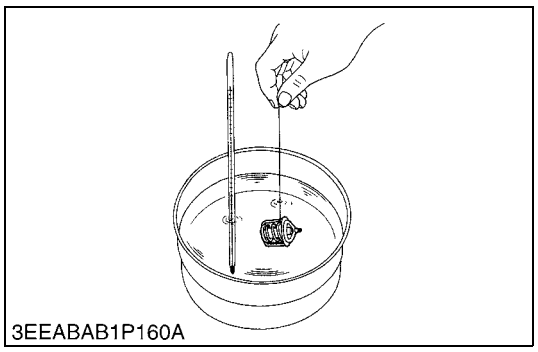
3EEABAB1P160A

Thermostat Valve Opening Temperature

1. Suspend the thermostat in the water by a string with its end inserted between the valve and seat.
2. Heating the water gradually, read the temperature when the valve opens and leaves the string.
3. Continue heating and read the temperature when the valve opens approx. 6 mm (0.2 in.).
4. If the measurement is not within the factory specifications, replace the thermostat.

Thermostat's valve opening temperature	Factory spec.	D1503-M D1703-M D1803-M V2003-M V2203-M V2403-M V2403-M-T D1703-M-BG V2003-M-BG V2003-M-T-BG V2203-M-BG V2403-M-BG	69.5 to 72.5 °C 157.1 to 162.5 °F
		D1803-M-DI V2403-M-DI V2403-M-DI-T	80.5 to 83.5 °C 176.9 to 182.3 °F
Temperature at which thermostat completely opens	Factory spec.	D1503-M D1703-M D1803-M V2003-M V2203-M V2403-M V2403-M-T D1703-M-BG V2003-M-BG V2003-M-T-BG V2203-M-BG V2403-M-BG	85 °C 185 °F
		D1803-M-DI V2403-M-DI V2403-M-DI-T	95 °C 203 °F

W1035849

https://truckmanualshub.com/

(4) Fuel System

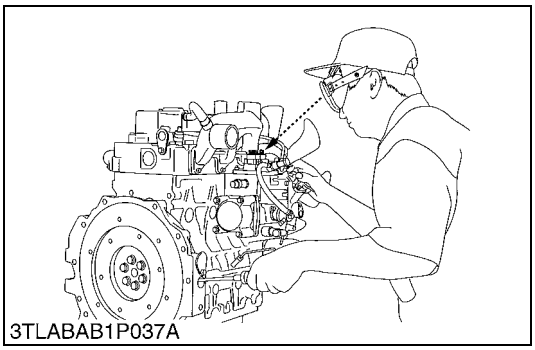
3TLABAB1P037A

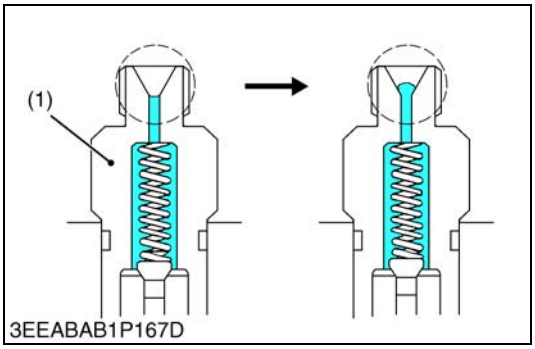

3EEABAB1P167D

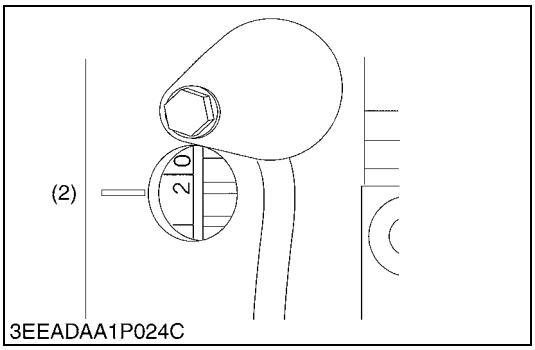

3EEADAA1P024C

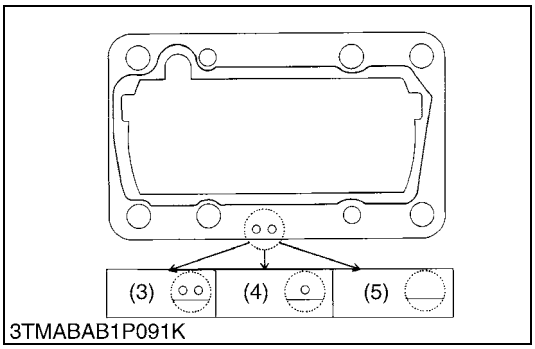

3TMABAB1P091K

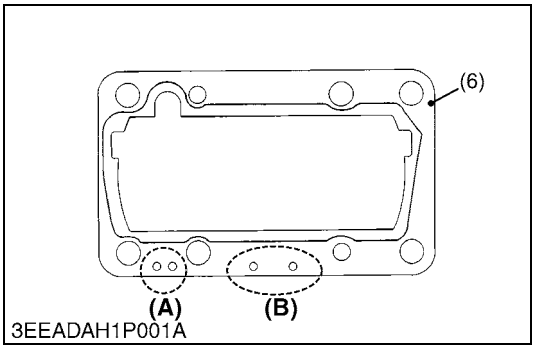

3EEADAH1P001A

Injection Timing

[D1503-M, D1703-M, D1803-M, V2003-M, V2203-M, V2403-M, V2403-M-T]
[D1703-M-BG, V2003-M-BG, V2003-M-T-BG, V2203-M-BG, V2403-M-BG]

1. Remove the stop solenoid.
2. Remove the injection pipes and nozzle.
3. Set the speed control lever to maximum fuel discharge position.

(Reference)

- Turn the flywheel with screwdriver.

4. Turn the flywheel counterclockwise (facing the flywheel) until the fuel fills up to the hole of the delivery valve holder for 1st cylinder.
5. Turn the flywheel further and stop turning when the fuel begins to flow over, to get the present injection timing.
6. (The flywheel has mark 1TC and four lines indicating every 0.09 rad (5 °) of crank angle from 0.17 rad (10 °) to 0.44 rad (25 °) before mark 1TC) Calculate the angle which the center of the window points out. If the calculation differs from specified injection timing, add or remove the shim to adjust.

(Injection Timing)

Model	Injection timing
D1503-M V2003-M-T-BG	0.253 to 0.279 rad (14.5 to 16.0 °) before T.D.C.
D1703-M, D1803-M V2003-M, V2203-M V2403-M	0.271 to 0.296 rad (15.5 to 17.0 °) before T.D.C.
V2403-M-T	0.132 to 0.157 rad (7.55 to 9.05 °) before T.D.C.
D1703-M-BG V2003-M-BG V2203-M-BG V2403-M-BG	0.236 to 0.261 rad (13.5 to 15.0 °) before T.D.C.

■ **NOTE**

- **The sealant is applied to both sides of the soft metal gasket shim. The liquid gasket is not required for assembling.**
- **Shims are available in thickness of 0.175 mm (6), 0.20 mm (3), 0.25 mm (4) and 0.30 mm (5). Combine these shims for adjustments.**
- **The 0.175 mm thick shim is coated only on the lower face. Therefore, do not use the 0.175 mm thick shim as the top shim of the combination (injection pump side), because this cause oil leakage.**
- **Addition or reduction of shim (0.05 mm, 0.002 in.) delays or advances the injection timing by approx. 0.009 rad (0.5 °).**
- **In disassembling and replacing, be sure to use the same number of new gasket shims with the same thickness.**

(1) Delivery Valve Holder
(2) Timing Mark
(3) 2-Holes: 0.20 mm (Shim)
(4) 1-hole: 0.25 mm (Shim)
(5) Without hole: 0.30 mm (Shim)
(6) 2-Holes: 0.175 mm (Shim)

(A) 3 Cylinder
(B) 4 Cylinder

W1036402

https://truckmanualshub.com/

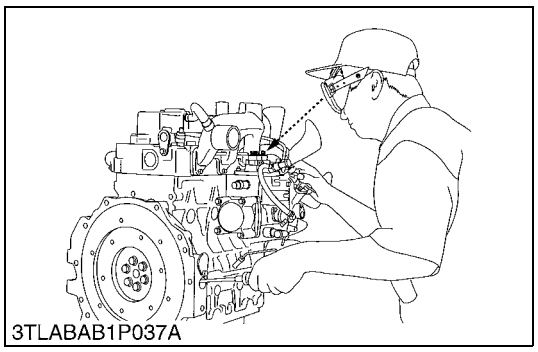
3TLABAB1P037A

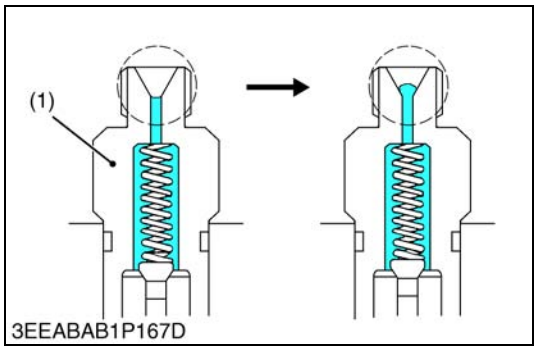

3EEABAB1P167D

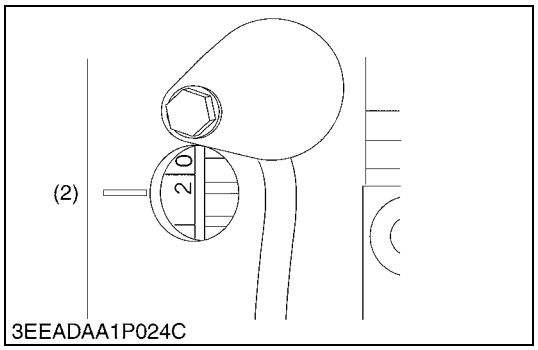

3EEADAA1P024C

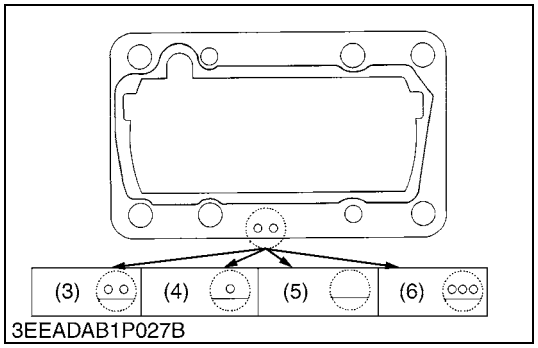

3EEADAB1P027B

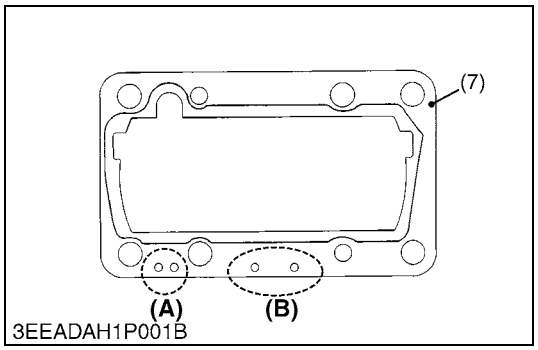

3EEADAH1P001B

Injection Timing

[D1803-M-DI, V2403-M-DI, V2403-M-DI-T]

1. Remove the stop solenoid.
2. Remove the injection pipes and nozzle.
3. Set the speed control lever to maximum fuel discharge position.

(Reference)

- Turn the flywheel with screwdriver.

4. Turn the flywheel counterclockwise (facing the flywheel) until the fuel fills up to the hole of the delivery valve holder for 1st cylinder.
5. Turn the flywheel further and stop turning when the fuel begins to flow over, to get the present injection timing.
6. (The flywheel has mark 1TC and four lines indicating every 0.09 rad (5 °) of crank angle from 0.17 rad (10 °) to 0.44 rad (25 °) before mark 1TC) Calculate the angle which the center of the window points out. If the calculation differs from specified injection timing, add or remove the shim to adjust.

(Injection Timing)

Model	Injection Timing
D1803-M-DI V2403-M-DI	0.0742 to 0.100 rad (4.25 ° to 5.75 °) before T.D.C.
V2403-M-DI-T	0.0829 to 0.109 rad (4.75 ° to 6.25 °) before T.D.C.

■ **NOTE**

- **The sealant is applied to both sides of the soft metal gasket shim. The liquid gasket is not required for assembling.**
- **Shims are available in thickness of 0.175 mm (7), 0.20 mm (3), 0.25 mm (4), 0.30 mm (5) and 0.35 mm (6). Combine these shims for adjustments.**
- **The 0.175 mm thick shim is coated only on the lower face. Therefore, do not use the 0.175 mm thick shim as the top shim of the combination (injection pump side), because this cause oil leakage.**
- **Addition or reduction of shim (0.05 mm, 0.002 in.) delays or advances the injection timing by approx. 0.009rad (0.5 °).**
- **In disassembling and replacing, be sure to use the same number of new gasket shims with the same thickness.**

(1) Delivery Valve Holder
(2) Timing Mark
(3) 2-Holes: 0.20 mm (Shim)
(4) 1-hole: 0.25 mm (Shim)
(5) Without hole: 0.30 mm (Shim)
(6) 3-Holes: 0.35 mm (Shim)
(7) 2-Holes: 0.175 mm (Shim)

(A) 3 Cylinder
(B) 4 Cylinder

W1047775

https://truckmanualshub.com/

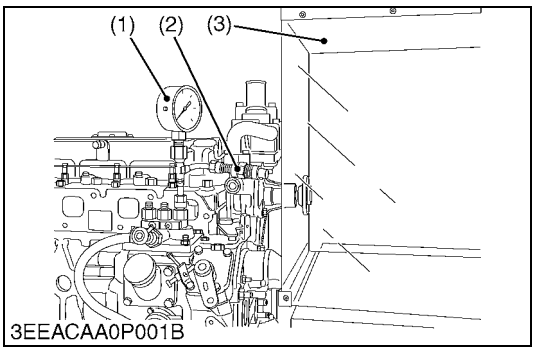

Fuel Tightness of Pump Element

[D1503-M, D1703-M, D1803-M, V2003-M, V2203-M, V2403-M, V2403-M-T]
[D1703-M-BG, V2003-M-BG, V2003-M-T-BG, V2203-M-BG, V2403-M-BG]

1. Remove the solenoid.
2. Remove the injection pipes and glow plugs.
3. Install the injection pump pressure tester to the injection pump.
4. Install the injection nozzle (2) jetted with the proper injection pressure to the injection pump pressure tester (1). (Refer to the figure.)
5. Set the speed control lever to the maximum speed position.
6. Run the starter to increase the pressure.
7. If the pressure can not reach the allowable limit, replace the pump with new one or repair with a Kubota-authorized pump service shop.

Fuel tightness of pump element	Allowable limit	13.73 MPa 140.0 kgf/cm^2 1991 psi

■ **NOTE**

- **Never try to disassemble the injection pump assembly. For repairs, you are strongly requested to contact a Kubota-authorized pump service shop.**

(1) Injection Pump Pressure Tester
(2) Injection Nozzle
(3) Protection Cover for Jetted Fuel

W1017430

https://truckmanualshub.com/

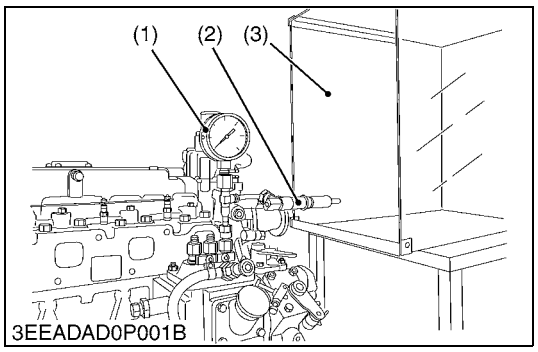

Fuel Tightness of Pump Element

[D1803-M-DI, V2403-M-DI, V2403-M-DI-T]

1. Remove the solenoid.
2. Remove the injection pipes and glow plugs.
3. Install the injection pump pressure tester to the injection pump.
4. Install the injection nozzle (2) jetted with the proper injection pressure to the injection pump pressure tester (1). (Refer to the figure.)
5. Set the speed control lever to the maximum speed position.
6. Run the starter to increase the pressure.
7. If the pressure can not reach the allowable limit, replace the pump with new one or repair with a Kubota-authorized pump service shop.

Fuel tightness of pump element	Allowable limit	18.63 MPa 190.0 kgf/cm^2 2702 psi

■ **NOTE**

- **Never try to disassemble the injection pump assembly. For repairs, you are strongly requested to contact a Kubota-authorized pump service shop.**

(1) Injection Pump Pressure Tester
(2) Injection Nozzle
(3) Protection Cover for Jetted Fuel

W1104546

https://truckmanualshub.com/

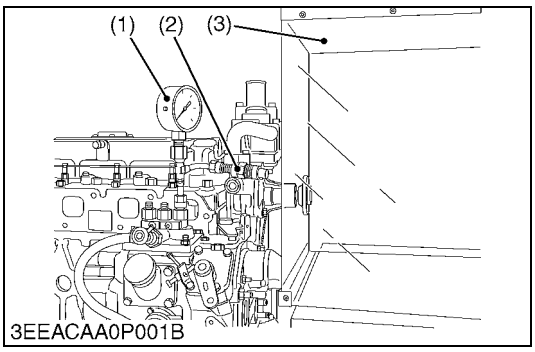

Fuel Tightness of Delivery Valve

[D1503-M, D1703-M, D1803-M, V2003-M, V2203-M, V2403-M, V2403-M-T]
[D1703-M-BG, V2003-M-BG, V2003-M-T-BG, V2203-M-BG, V2403-M-BG]

1. Remove the solenoid.
2. Remove the injection pipes and glow plugs.
3. Set a pressure tester to the fuel injection pump.
4. Install the injection nozzle (2) jetted with the proper injection pressure to the injection pump pressure tester (1).
5. Run the starter to increase the pressure.
6. Stop the starter when the fuel jets from the injection nozzle. After that, turn the flywheel by the hand and raise the pressure to approx. 13.73 MPa (140.0 kgf/cm^2, 1991 psi).
7. Now turn the flywheel back about half a turn (to keep the plunger free). Maintain the flywheel at this position and clock the time taken for the pressure to drop from 13.73 to 12.75 MPa (140.0 to 130.0 kgf/cm^2, 1991 to 1849 psi).
8. Measure the time needed to decrease the pressure from 13.73 to 12.75 MPa (140.0 to 130.0 kgf/cm^2, 1991 to 1849 psi).
9. If the measurement is less than allowable limit, replace the pump with new one or repair with a Kubota-authorized pump service shop.

Fuel tightness of delivery valve	Factory spec.	10 seconds 13.73 → 12.75 MPa 140.0 → 130.0 kgf/cm^2 1991 → 1849 psi
	Allowable limit	5 seconds 13.73 → 12.75 MPa 140.0 → 130.0 kgf/cm^2 1991 → 1849 psi

■ **NOTE**

- **Never try to disassemble the injection pump assembly. For repairs, you are strongly requested to contact a Kubota-authorized pump service shop.**

(1) Injection Pump Pressure Tester
(2) Injection Nozzle
(3) Protection Cover for Jetted Fuel

W1017786

https://truckmanualshub.com/

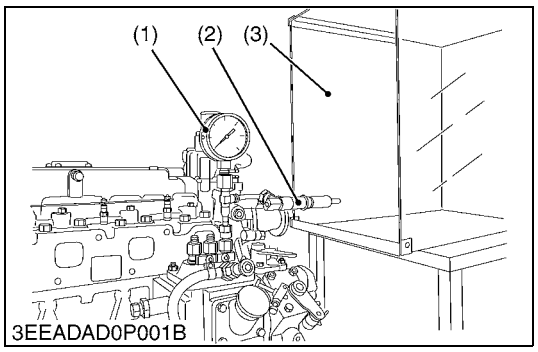

Fuel Tightness of Delivery Valve

[D1803-M-DI, V2403-M-DI, V2403-M-DI-T]

1. Remove the solenoid.
2. Remove the injection pipes and glow plugs.
3. Set a pressure tester to the fuel injection pump.
4. Install the injection nozzle (2) jetted with the proper injection pressure to the injection pump pressure tester (1).
5. Run the starter to increase the pressure.
6. Stop the starter when the fuel jets from the injection nozzle. After that, turn the flywheel by the hand and raise the pressure to approx. 18.63 MPa (190.0 kgf/cm^2, 2702 psi).
7. Now turn the flywheel back about half a turn (to keep the plunger free). Maintain the flywheel at this position and clock the time taken for the pressure to drop from 18.63 to 17.65 MPa (190.0 to 180.0 kgf/cm^2, 2702 to 2560 psi).
8. Measure the time needed to decrease the pressure from 18.63 to 17.65 MPa (190.0 to 180.0 kgf/cm^2, 2702 to 2560 psi).
9. If the measurement is less than allowable limit, replace the pump with new one or repair with a Kubota-authorized pump service shop.

Fuel tightness of delivery valve	Factory spec.	10 seconds 18.63 → 17.65 MPa 190.0 → 180.0 kgf/cm^2 2702 → 2560 psi
	Allowable limit	5 seconds 18.63 → 17.65 MPa 190.0 → 180.0 kgf/cm^2 2702 → 2560 psi

■ **NOTE**

- **Never try to disassemble the injection pump assembly. For repairs, you are strongly requested to contact a Kubota-authorized pump service shop.**

(1) Injection Pump Pressure Tester
(2) Injection Nozzle
(3) Protection Cover for Jetted Fuel

W1108296

https://truckmanualshub.com/

CAUTION

- **Check the injection pressure and condition after confirming that there is nobody standing in the direction the fume goes.**
- **If the fume from the nozzle directly contacts the human body, cells may be destroyed and blood poisoning may be caused.**

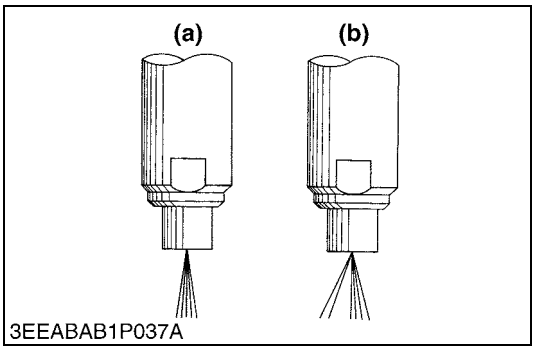

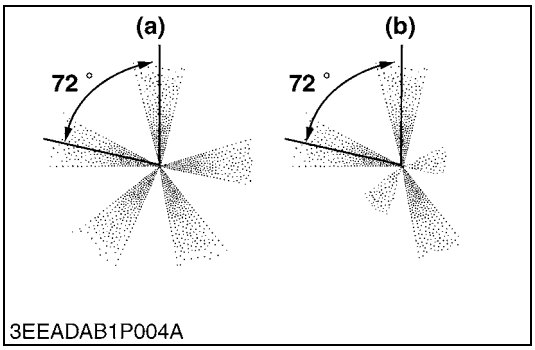

Nozzle Spraying Condition

[D1503-M, D1703-M, D1803-M, V2003-M, V2203-M, V2403-M, V2403-M-T]
[D1703-M-BG, V2003-M-BG, V2003-M-T-BG, V2203-M-BG, V2403-M-BG]

1. Set the injection nozzle to a nozzle tester, and check the nozzle spraying condition.
2. If the spraying condition is defective, replace the nozzle piece.

(a) Good **(b) Bad**

W10181310

[D1803-M-DI, V2403-M-DI, V2403-M-DI-T]

1. Set the injection nozzle to a nozzle tester, and check the nozzle spraying condition.
2. If the spraying condition is defective, replace the injection nozzle assembly.

(a) Good **(b) Bad**

W10226470

https://truckmanualshub.com/

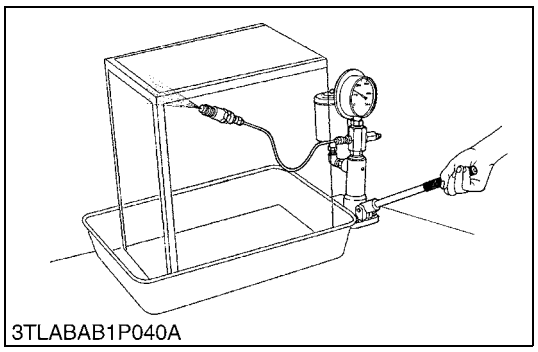
3TLABAB1P040A

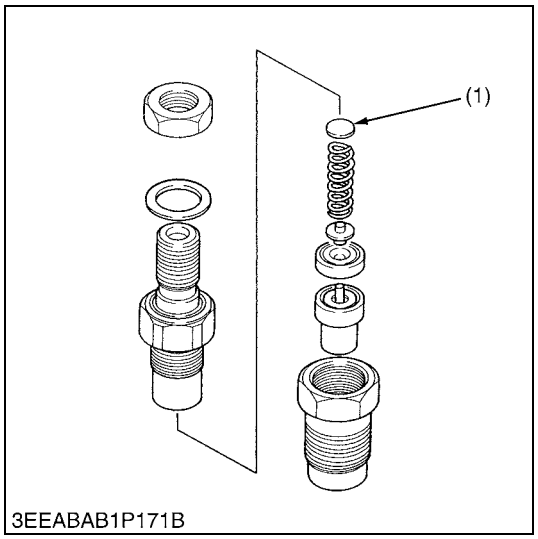

3EEABAB1P171B

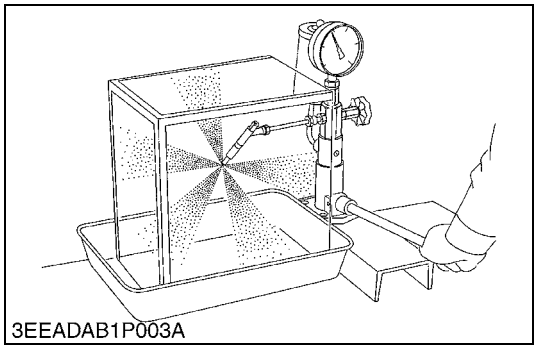
3EEADAB1P003A

Fuel Injection Pressure

[D1503-M, D1703-M, D1803-M, V2003-M, V2203-M, V2403-M, V2403-M-T]
[D1703-M-BG, V2003-M-BG, V2003-M-T-BG, V2203-M-BG, V2403-M-BG]

1. Set the injection nozzle to a nozzle tester.
2. Slowly move the tester handle to measure the pressure at which fuel begins jetting out from the nozzle.
3. If the measurement is not within the factory specifications, replace the adjusting washer (1) in the nozzle holder to adjust it.

(Reference)

- Pressure variation with 0.025 mm (0.00098 in.) difference of adjusting washer thickness.
  Approx. 590 kPa (6.0 kgf/cm^2, 85 psi)

Fuel injection pressure	Factory spec.	13.73 to 14.70 MPa 140.0 to 150.0 kgf/cm^2 1992 to 2133 psi

(1) Adjusting Washer

W10476390

[D1803-M-DI, V2403-M-DI, V2403-M-DI-T]

1. Set the injection nozzle to a nozzle tester.
2. Slowly move the tester handle to measure the pressure at which fuel begins jetting out from the nozzle.
3. If the measurement is not within the factory specifications, replace the injection nozzle assembly.

Fuel injection pressure (1st stage)	Factory spec.	18.64 to 20.10 MPa 190.0 to 205.0 kgf/cm^2 2703 to 2915 psi

W10227280

https://truckmanualshub.com/

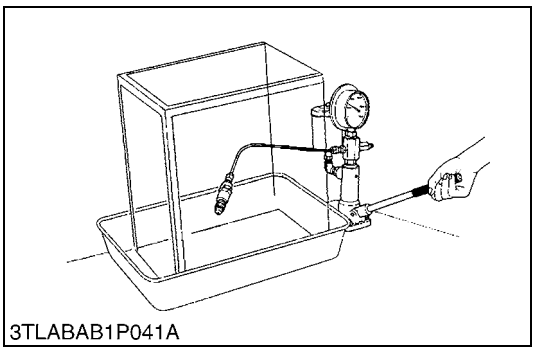
3TLABAB1P041A

Valve Seat Tightness

[D1503-M, D1703-M, D1803-M, V2003-M, V2203-M, V2403-M, V2403-M-T]
[D1703-M-BG, V2003-M-BG, V2003-M-T-BG, V2203-M-BG, V2403-M-BG]

1. Set the injection nozzle to a nozzle tester.
2. Raise the fuel pressure, and keep at 12.75 MPa (130.0 kgf/cm^2, 1849 psi) for 10 seconds.
3. If any fuel leak is found, replace the nozzle piece.

Valve seat tightness	Factory spec.	No fuel leak at 12.75 MPa 130.0 kgf/cm^2 1849 psi

W10183690

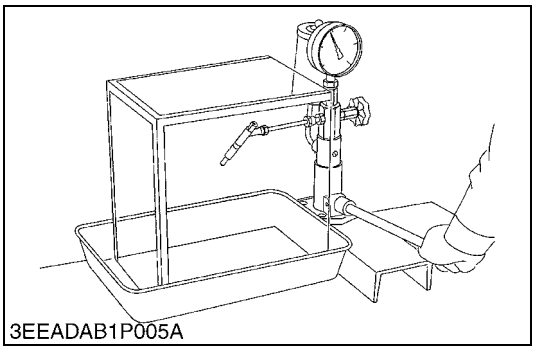
3EEADAB1P005A

[D1803-M-DI, V2403-M-DI, V2403-M-DI-T]

1. Set the injection nozzle to a nozzle tester.
2. Raise the fuel pressure, and keep at 16.67 MPa (170.0 kgf/cm^2, 2418 psi) for 10 seconds.
3. If any fuel leak is found, replace the injection nozzle assembly.

Valve seat tightness	Factory spec.	No fuel leak at 16.67 MPa 170.0 kgf/cm^2 2418 psi

W10228300

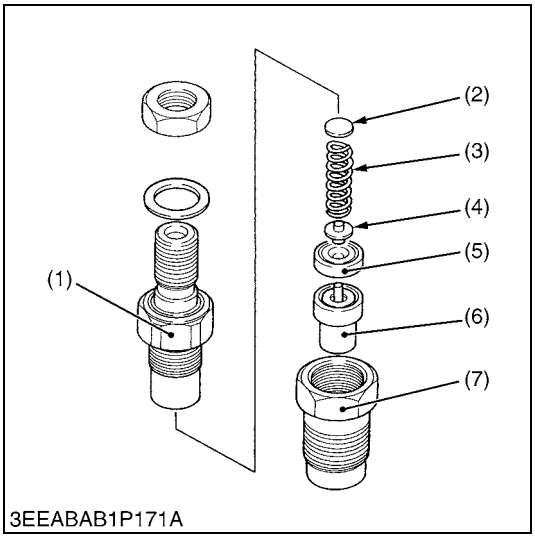

3EEABAB1P171A

Nozzle Holder

[D1503-M, D1703-M, D1803-M, V2003-M, V2203-M, V2403-M, V2403-M-T]
[D1703-M-BG, V2003-M-BG, V2003-M-T-BG, V2203-M-BG, V2403-M-BG]

1. Secure the nozzle retaining nut (7) with a vise.
2. Remove the nozzle holder (1), and take out parts inside.

(When reassembling)

- Assemble the nozzle in clean fuel oil.
- Install the push rod (4), noting its direction.
- After assembling the nozzle, be sure to adjust the fuel injection pressure.

Tightening torque	Nozzle holder	35 to 39 N·m 3.5 to 4.0 kgf·m 26 to 28 lbf·ft
	Overflow pipe retaining nut	20 to 24 N·m 2.0 to 2.5 kgf·m 15 to 18 lbf·ft
	Nozzle holder assembly	49 to 68 N·m 5.0 to 7.0 kgf·m 37 to 50 lbf·ft

(1) Nozzle Holder
(2) Adjusting Washer
(3) Nozzle Spring
(4) Push Rod
(5) Distance Piece
(6) Nozzle Piece
(7) Nozzle Retaining Nut

W1018491

https://truckmanualshub.com/

(5) Electrical System

CAUTION

- **To avoid accidental short circuit, be sure to attach the positive cable to the positive terminal before the negative cable is attached to the negative terminal.**
- **Never remove the battery cap while the engine is running.**
- **Keep electrolyte away from eyes, hands and clothes. If you are spattered with it, wash it away completely with water immediately.**
- **Keep open sparks and flames away from the battery at all times. Hydrogen gas mixed with oxygen becomes very explosive.**

■ **IMPORTANT**

- **If the machine is to be operated for a short time without battery (using a slave battery for starting), use additional current (lights) while engine is running and insulate terminal of battery. If this advice is disregarded, damage to alternator and regulator may result.**

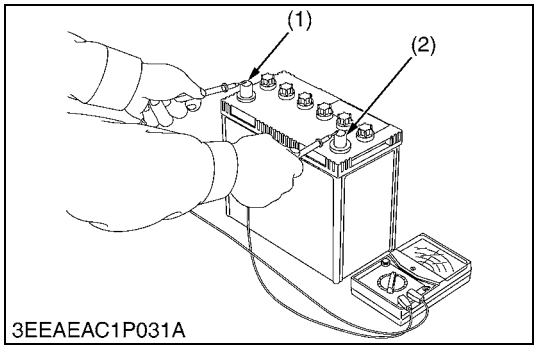

Battery Voltage

1. Stop the engine.
2. Measure the voltage with a circuit tester between the battery terminals.
3. If the battery voltage is less than the factory specification, check the battery specific gravity and recharge the battery.

Battery voltage	Factory spec.	More than 12 V

(1) Positive Terminal (2) Negative Terminal

W10125620

https://truckmanualshub.com/

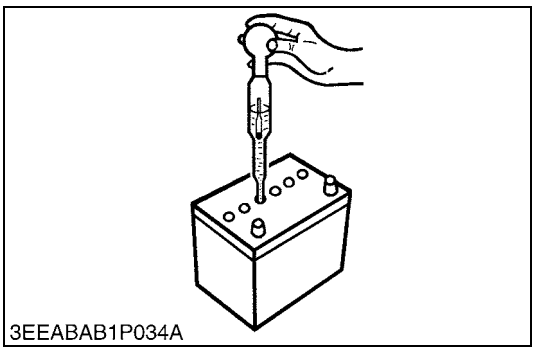
3EEABAB1P034A

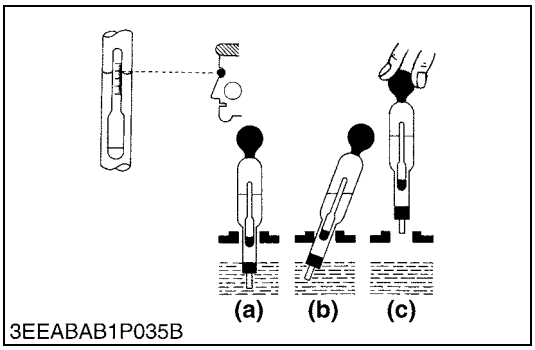

3EEABAB1P035B

Battery Specific Gravity

1. Check the specific gravity of the electrolyte in each cell with a hydrometer.
2. When the electrolyte temperature differs from that at which the hydrometer was calibrated, correct the specific gravity reading following the formula mentioned in **(Reference)**.
3. If the specific gravity is less than 1.215 (after it is corrected for temperature), charge or replace the battery.
4. If the specific gravity differs between any two cells by more than 0.05, replace the battery.

■ **NOTE**

- **Hold the hydrometer tube vertical without removing it from the electrolyte.**
- **Do not suck too much electrolyte into the tube.**
- **Allow the float to move freely and hold the hydrometer at eye level.**
- **The hydrometer reading must be taken at the highest electrolyte level.**

(Reference)

- Specific gravity slightly varies with temperature. To be exact, the specific gravity decreases by 0.0007 with an increase of 1 °C (0.0004 with an increase of 1 °F) in temperature, and increases by 0.0007 with a decreases of 1 °C (0.0004 with a decrease of 1 °F).
  Therefore, using 20 °C (68 °F) as a reference, the specific gravity reading must be corrected by the following formula :
  - Specific gravity at 20 °C = Measured value + 0.0007 × (electrolyte temperature : 20 °C)
  - Specific gravity at 68 °F = Measured value + 0.0004 × (electrolyte temperature : 68 °F)

Specific Gravity	State of Charge
1.260 Sp. Gr.	100 % Charged
1.230 Sp. Gr.	75 % Charged
1.200 Sp. Gr.	50 % Charged
1.170 Sp. Gr.	25 % Charged
1.140 Sp. Gr.	Very Little Useful Capacity
1.110 Sp. Gr.	Discharged

At an electrolyte temperature of 20 °C (68 °F)

(a) Good
(b) Bad
(c) Bad

W1019017

https://truckmanualshub.com/

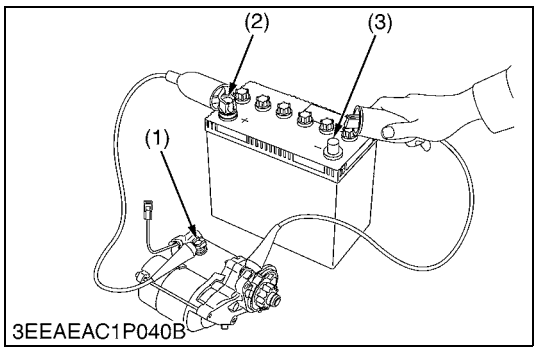

Motor Test

CAUTION

- **Secure the starter to prevent it from jumping up and down while testing the motor.**

1. Disconnect the battery negative cable from the battery.
2. Disconnect the battery positive cable from the battery.
3. Disconnect the leads from the starter **B** terminal.
4. Remove the starter from the engine.
5. Connect a jumper lead from the starter **C** terminal (1) to the battery positive terminal (2).
6. Connect a jumper lead momentarily between the starter's body and the battery negative terminal (3).
7. If the motor does not run, starter is failure.
   Repair or replace the starter.

NOTE

- **B terminal : It is the terminal which connects the cable from the battery to the starter.**
- **C terminal : It is the terminal which connects the cable from the motor to the magnet switch.**

(1) **C** Terminal
(2) Positive Terminal
(3) Negative Terminal

W1019297

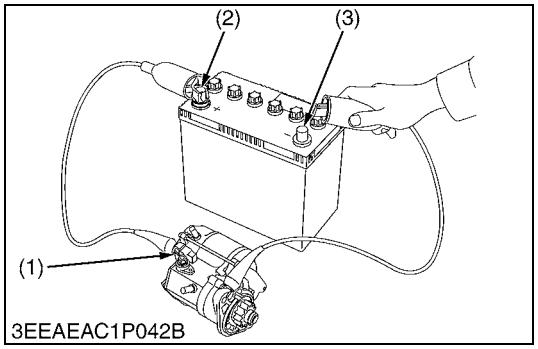

Magnetic Switch Test

1. Disconnect the battery negative cable from the battery.
2. Disconnect the battery positive cable from the battery.
3. Disconnect the leads from the starter **B** terminal.
4. Remove the starter from the engine.
5. Connect a jumper lead from the starter **S** terminal (1) to the battery positive terminal (2).
6. Connect a jumper lead momentarily between the starter's body and the battery negative terminal (3).
7. If the pinion gear does not pop out, the magnetic switch is failure.
   Repair or replace the starter.

NOTE

- **B terminal : It is the terminal which connects the cable from the battery to the starter.**
- **S terminal : It is the terminal which connects the cable from the starter switch to the magnet switch.**

(1) **S** Terminal
(2) Positive Terminal
(3) Negative Terminal

0000010743E

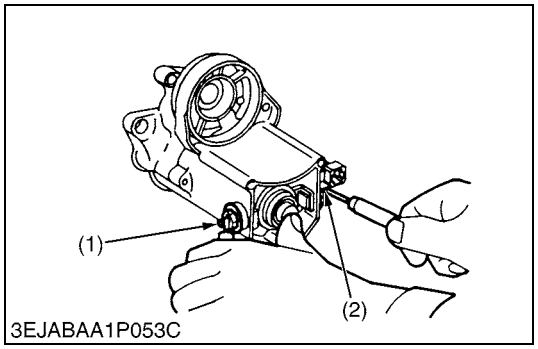

Magnet Switch Continuity Test

1. Check the continuity across the **C** terminal (1) and the **B** terminal (2) with a circuit tester, pushing in the plunger.
2. If not continuous or if a certain value is indicated, replace the magnet switch.

(1) **C** Terminal
(2) **B** Terminal

0000010771E

https://truckmanualshub.com/

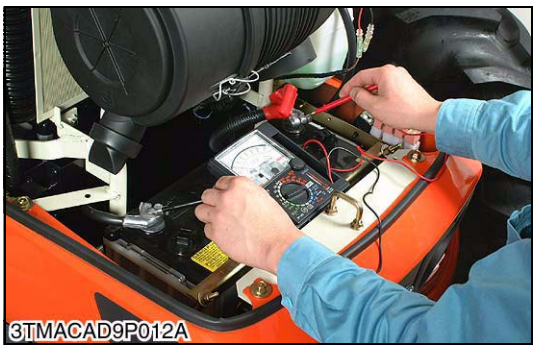

Alternator on Unit Test

(Before testing)

- Before alternator on unit test, check the battery terminal connections, circuit connection, fan belt tension, charging indicator lamp, fuses on the circuit, and abnormal noise from the alternator.
- Prepare full charged battery for the test.

■ **NOTE**

- **Be careful not to touch the rotating engine parts while engine is running.**
  Keep safety distance from the engine rotating parts.

1. Start the engine.
2. When the engine is operating measure the voltage between two battery terminals. If the voltage is between 13.8 V and 14.8 V, the alternator is operating normally.
3. If the results of alternator on unit test are not within the specifications, disassemble the alternator and check the each component part for finding out the failure. See the "DISASSEMBLING AND ASSEMBLING" and "SERVICING" for alternator.

Regulating voltage at no load	Factory spec.	13.8 to 14.8 V at 25 °C (77 °F)

0000010745E

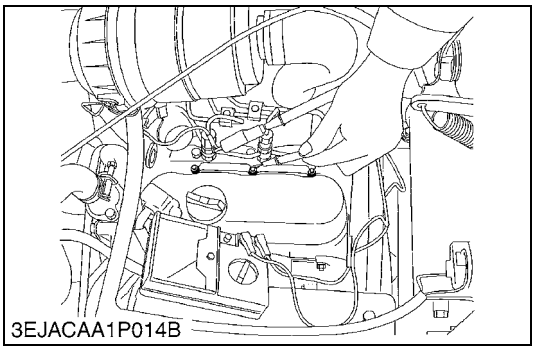

Glow Plug Lead Terminal Voltage

1. Turn the key switch to the "**GLOW** (or **PREHEAT**)" position, and measure the voltage with a circuit tester between the lead terminal and the engine body.
2. If the voltage differs from the battery voltage, the wiring harness or main switch is faulty.

Voltage	Main switch key at **GLOW** (or **PREHEAT**)	Approx. battery voltage

0000010725E

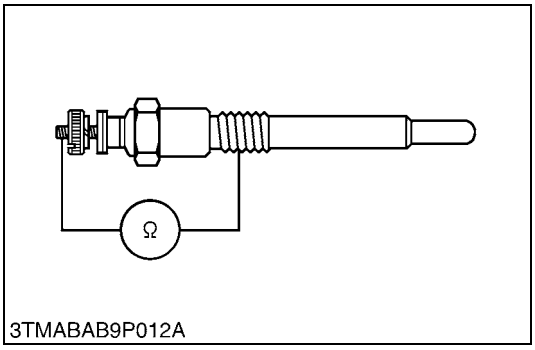

Glow Plug Continuity

1. Remove the glow plug.
2. Measure the resistance with a circuit tester between the glow plug terminal and the glow plug housing.
3. If the factory specification is not indicated, glow plug is faulty.

Resistance	Factory spec.	Approx. 0.9 Ω

0000010726E

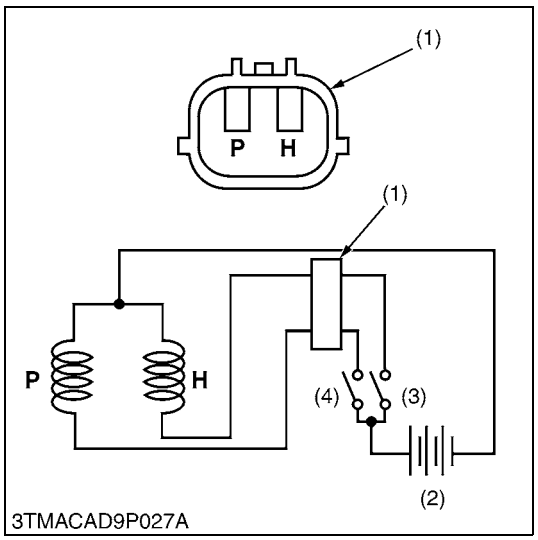

Engine Stop Solenoid

1. Remove the engine stop solenoid from the engine.
2. Connect the jumper leads from the pulling coil **P** terminal to the switch (3), and from switch (3) to the battery positive terminal.
3. Connect the jumper leads from the holding coil **H** terminal to the switch (4), and from switch (4) to the battery positive terminal.
4. Connect the jumper leads from the engine stop solenoid body to the battery negative terminal.
5. When switch (4) is turn on, the plunger pull into the solenoid body and then turn off the switch (4), the plunger comes out.
6. Turn on the switch (3) then turn on the switch (4), the plunger pull into the solenoid body and it keep in holding position after turn off the switch (4).
7. If the plunger is not attracted, the engine stop solenoid is faulty.

■ **IMPORTANT**

- **Never apply the current for pulling coil more than two seconds when inspecting.**

(1) Connector
(2) Battery
(3) Switch for Holding Coil
(4) Switch for Pulling Coil

P : Terminal for Pulling Coil
H : Terminal for Holding Coil

W1020600

(6) Turbocharger

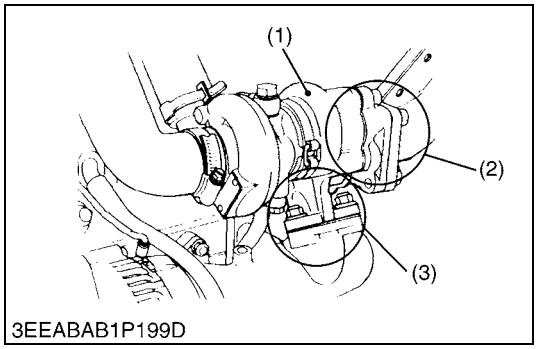

Turbine Side

1. Check the exhaust port (2) and inlet port (3) side of the turbine housing (1) to see if there is no exhaust gas leak.
2. If any gas leak is found, retighten the bolts and nuts or replace the gasket with new one.

(1) Turbine Housing
(2) Exhaust Port
(3) Inlet Port

W1069824

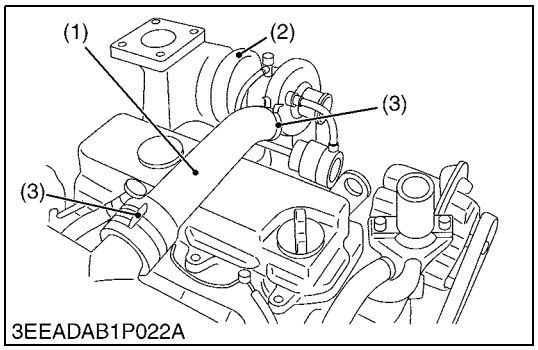

Compressor Side

1. Check the inlet hose (1) of the compressor cover (2) to see if there is no air leak.
2. Check for loose connections or cracks in the suction side of the intake hose.
3. If any air leak is found, change the clamp (3) and / or inlet hoses.

(1) Inlet Hose
(2) Compressor Cover
(3) Clamp

W1069939

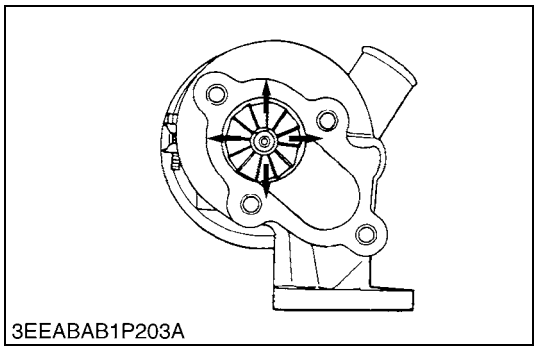

Radial Clearance

1. If the wheel contact to the housing, replace the turbocharger assembly with new one.

W1077353

https://truckmanualshub.com/

(7) Electronic Governor

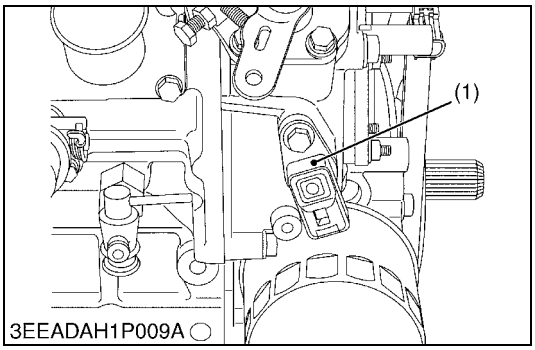

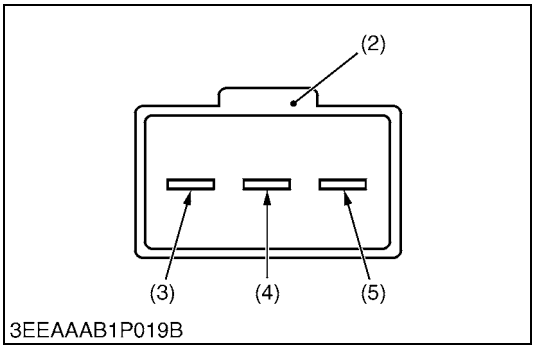

Speed Sensor

1. Disconnect the speed sensor connector (2) (3P).
2. Check the state of the harness and if it is abnormal, please replace it.
3. Turn the key switch to the ACC position.
4. Measure the voltage between the terminals of the connector (2) (harness side).
5. When the measurements are the below table value.
   The ECU is normal. The speed sensor (1) is failure, then please replace it.
6. When the measurements are out of the below table value.
   The ECU is failure, then please replace it.

Voltage	Terminal **1** - Terminal **3**	12 V
	Terminal **1** - Terminal **2**	5 V

(1) Speed Sensor
(2) Speed Sensor Connector (Harness Side)
(3) Terminal **3** (+)
(4) Terminal **2** (Signal)
(5) Terminal **1** (GND)

W1058552

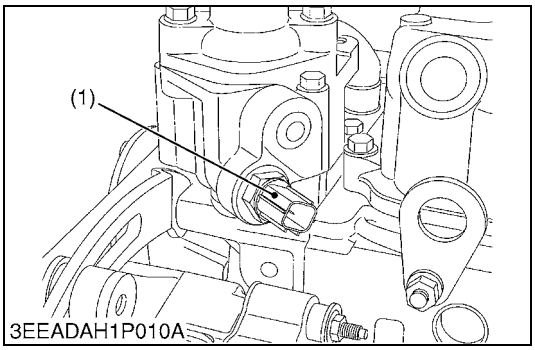

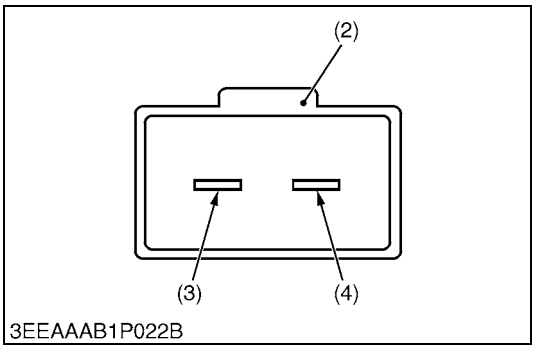

Water Temperature Sensor

1. Disconnect the water temperature sensor connector (2) (2P).
2. Check the state of the harness and if it is abnormal, please replace it.
3. Turn the key switch to the ACC position.
4. Measure the voltage between the terminals of the connector (2) (harness side).
5. When the measurements are the below table value.
   The ECU is normal. The water temperature sensor (1) is failure, then please replace it.
6. When the measurements are out of the below table value.
   The ECU is failure, then please replace it.

Voltage	Terminal **1** - Terminal **2**	5 V

(1) Water Temperature Sensor
(2) Water Temperature Sensor Connector (Harness Side)
(3) Terminal **2** (–)
(4) Terminal **1** (+)

W1059499

https://truckmanualshub.com/

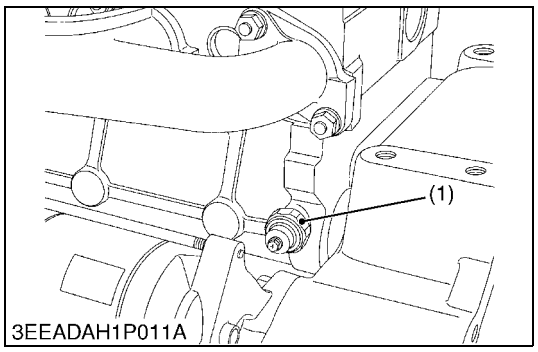

Oil Pressure Switch

1. Disconnect the connector of the oil pressure switch connector (1P).
2. Check the state of the harness and if it is abnormal, please replace it.
3. Measure the resistance between the terminal of the connector (harness side) and chassis.
4. When the measurements are the below table value.
   The ECU is normal. The oil pressure switch (1) is failure, then please replace it.
5. When the measurements are out of the below table value.
   The ECU is failure, then please replace it.

Resistance	Terminal **1** - Chassis	Infinity

(1) Oil Pressure Switch

W1059711

https://truckmanualshub.com/

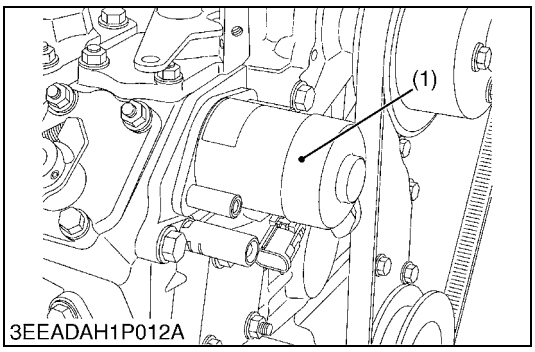

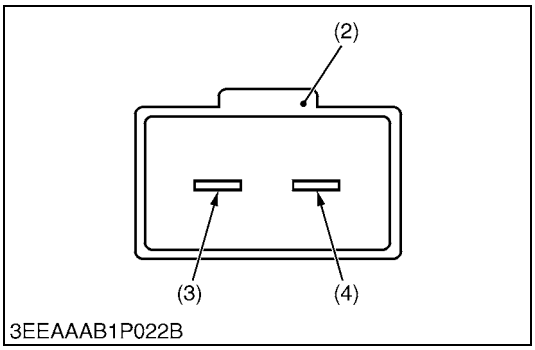

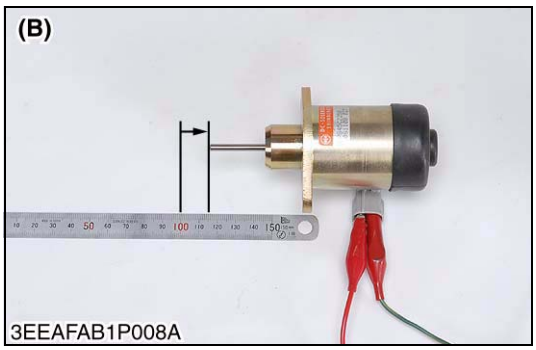

Solenoid

1. Disconnect the connector of solenoid (2) (2P).
2. Check the state of the harness and if it is abnormal, please replace it.
3. Turn the key switch to the ACC position.
4. Measure the voltage between the connector of solenoid (2) (harness side).
5. When the measurements are the below table value.
   The ECU is normal. Check the solenoid (1) according to the procedure of confirming the solenoid's movement.
6. When the measurements are out of the below table value.
   The ECU is failure, then please replace it.

Voltage	Terminal **1** - Terminal **2**	12 V

(Reference)

- The procedure of confirming the solenoid's movement

1. Measure the resistance between the connector of solenoid (2).
2. When the measurements are the below table value.
   The solenoid (1) is normal electrically. Check the solenoid's movement.
3. When the measurements are out of the below table value.
   The solenoid (1) is failure, then please replace it.
4. Remove the solenoid (1) from the engine.
5. Supply the voltage (12 V) to the solenoid (1).
6. When the rod of the solenoid (1) moves smoothly.
   The solenoid (1) is normal.
7. When the rod of the solenoid (1) does not move smoothly.
   The solenoid (1) is failure, then please replace it.

CAUTION

- Please note handling, the solenoid (1) becomes a high temperature.

Resistance	Terminal **1** - Terminal **2**	2 to 4 Ω

(1) Solenoid
(2) Connector of Solenoid
(3) Terminal **2** (–)
(4) Terminal **1** (+)

(A) Key Switch OFF Position
(B) Key Switch ON Position

W1060938

https://truckmanualshub.com/

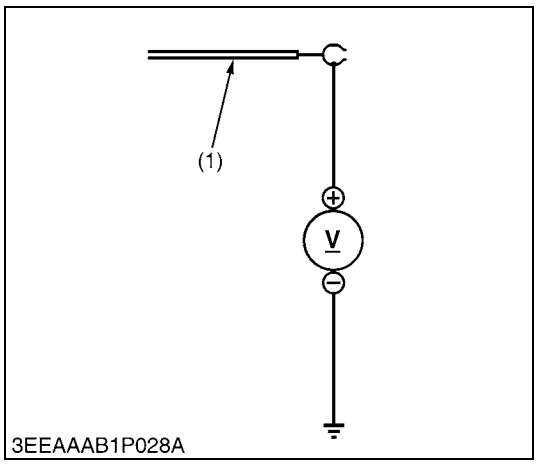

Glow Plug Harness

1. Disconnect the glow plug terminal (1).
2. Check the state of the harness and if it is abnormal, please replace it.
3. Turn the key switch to the ACC position.
4. Measure the voltage between the glow pulg terminal (1) of the connector (harness side) and chassis.
5. When the measurements are the below table value.
   The ECU is normal. Some of the glow plugs are failure, then please replace them.
6. When the measurements are out of the below table value.
   The ECU is failure, then please replace it.

Voltage	Terminal - Chassis	12 V

(1) Glow Plug Terminal

W1061770

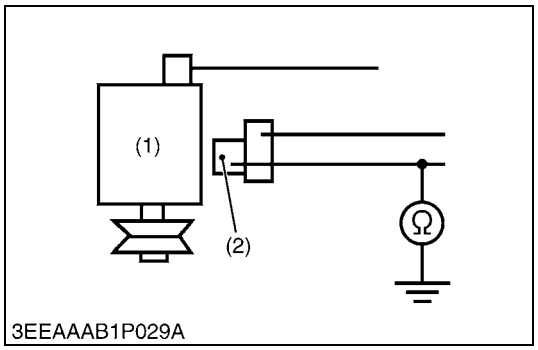

Alternator

1. Disconnect the terminal **L** (2) of the alternator (2P).
2. Check the state of the harness and if it is abnormal, please replace it.
3. Measure the resistance between the terminal **L** (2) of the connector (harness side) and chassis.
4. When the measurements are the below table value.
   The ECU is normal. The alternator is failure, then please replace it.
5. When the measurements are out of the below table value.
   The ECU is failure, then please replace it.

Resistance	Terminal **L** - Chassis	Infinity

(1) Alternator (2) Terminal **L** (Harness Side)

W1063000

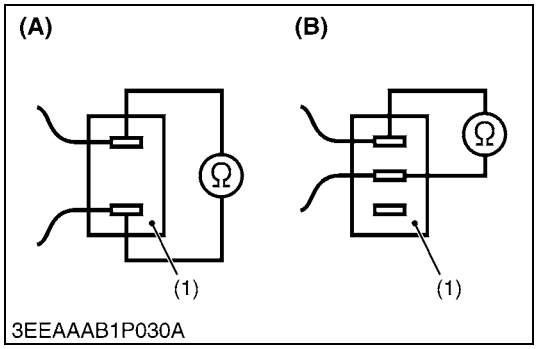

Speed Switch

1. Check the state of the harness and if it is abnormal, please replace it.
2. When the speed switch is turned **ON** and **OFF**, measure the resistance between the speed switch (terminal side) (1) of it each time.
3. When the measurements are the below table value.
   The speed switch is normal. The ECU is failure, then please replace it.
4. When the measurements are out of the below table value.
   The speed switch is failure, then please replace it.

Resistance	**ON**	0 Ω
	OFF	Infinity

(1) Speed Switch (Terminal Side)
(A) Single Pole, Single Throw
(B) Single Pole, Double Throw

W1063856

https://truckmanualshub.com/

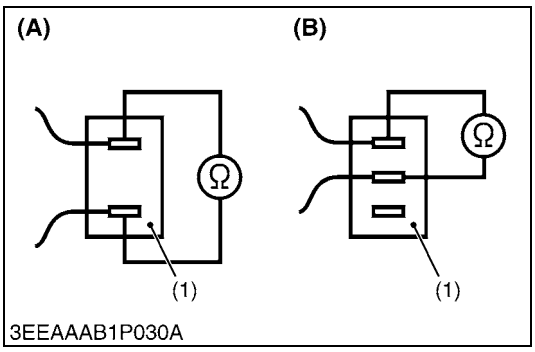

Emergency Stop Switch

1. Check the state of the harness and if it is abnormal, please replace it.
2. When the emergency stop switch is turned **ON** and **OFF**, measure the resistance between the emergency stop switch (terminal side) (1) of it each time.
3. When the measurements are the below table value.
   The emergency stop switch is normal. The ECU is failure, then please replace it.
4. When the measurements are out of the below table value.
   The emergency stop switch is failure, then please replace it.

Resistance	**ON**	0 Ω
	OFF	Infinity

(1) Emergency Stop Switch (Terminal Side)
(A) Single Pole, Single Throw
(B) Single Pole, Double Throw

W1066629

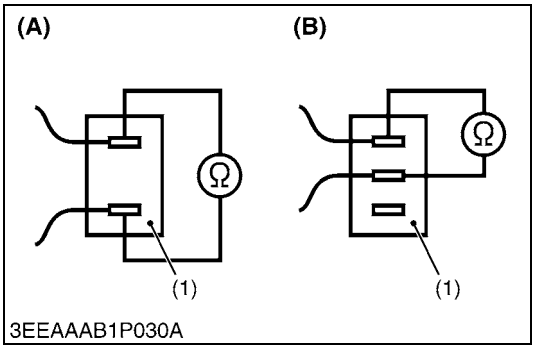

Slow Down Switch

1. Check the state of the harness and if it is abnormal, please replace it.
2. When the slow down switch is turned **ON** and **OFF**, measure the resistance between the slow down switch (terminal side) (1) of it each time.
3. When the measurements are the below table value.
   The slow down switch is normal. The ECU is failure, then please replace it.
4. When the measurements are out of the below table value.
   The slow down switch is failure, then please replace it.

Resistance	**ON**	0 Ω
	OFF	Infinity

(1) Slow Down Switch (Terminal Side)
(A) Single Pole, Single Throw
(B) Single Pole, Double Throw

W1067200

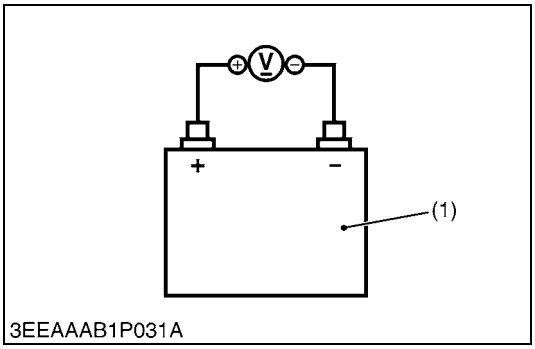

Battery

1. Measure the voltage of the battery (1) with the engine stopped.
2. When the measurements are the below table value.
   The battery is normal. The ECU is failure, then please replace it.
3. When the measurements are out of the below table value.
   The battery is failure, then please replace it.

Voltage	**+** terminal - – terminal	12 V

(1) Battery

W1067456

https://truckmanualshub.com/

[2] DISASSEMBLING AND ASSEMBLING

(1) Draining Oil and Coolant

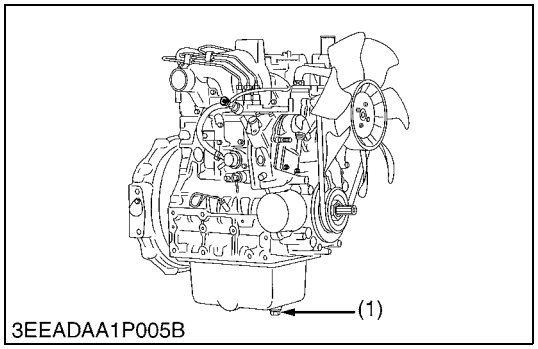

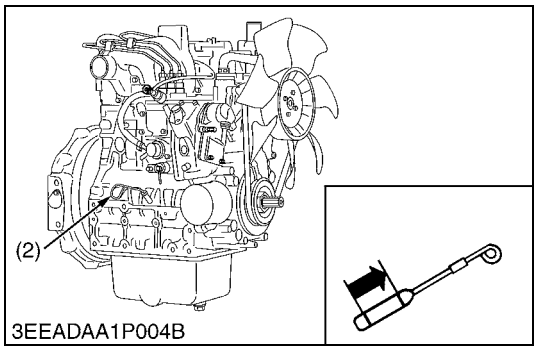

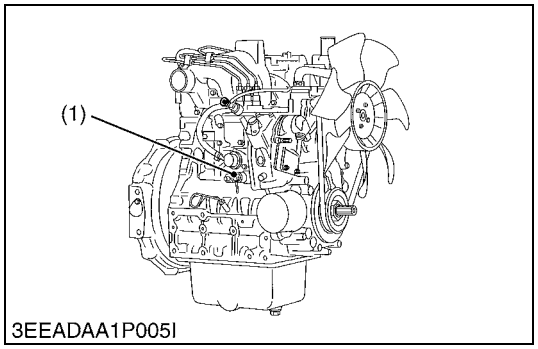

Draining Engine Oil

1. Start and warm up the engine for approx. 5 minutes.
2. Place an oil pan underneath the engine.
3. Remove the drain plug (1) to drain oil.
4. After draining, screw in the drain plug.

(When refilling)

- Fill the engine oil up to the upper line on the dipstick (2).

■ **IMPORTANT**

- **Never mix two different types of oil.**
- **Use the proper SAE Engine Oil according to ambient temperature.**

(1) Drain Plug (2) Dipstick

W1028998

Draining Coolant

CAUTION

- **Never remove radiator cap while operating or immediately after stopping. Otherwise, hot water will spout out from the radiator. Wait for more than ten minutes to cool the radiator, before opening the cap.**

1. Prepare a bucket. Open the coolant drain cock.

(1) Coolant Drain Cock

W1029172

(2) External Components

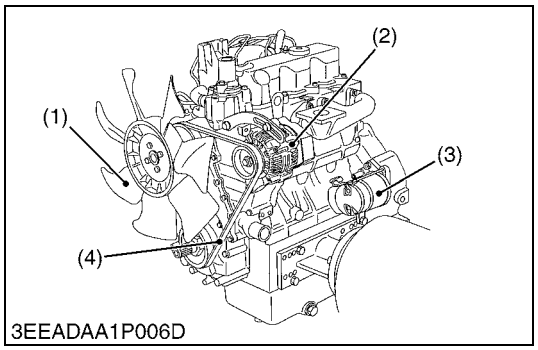

Air Cleaner, Muffler and Others

1. Remove the air cleaner and muffler.
2. Remove the fan (1), fan belt (4), alternator (2) and starter (3).

(When reassembling)

- Check to see that there are no cracks on the belt surface.

■ **IMPORTANT**

- **After reassembling the fan belt, be sure to adjust the fan belt tension.**
- **Do not confuse the direction of the fan.**

(1) Fan (3) Starter
(2) Alternator (4) Fan Belt

W1060302

https://truckmanualshub.com/

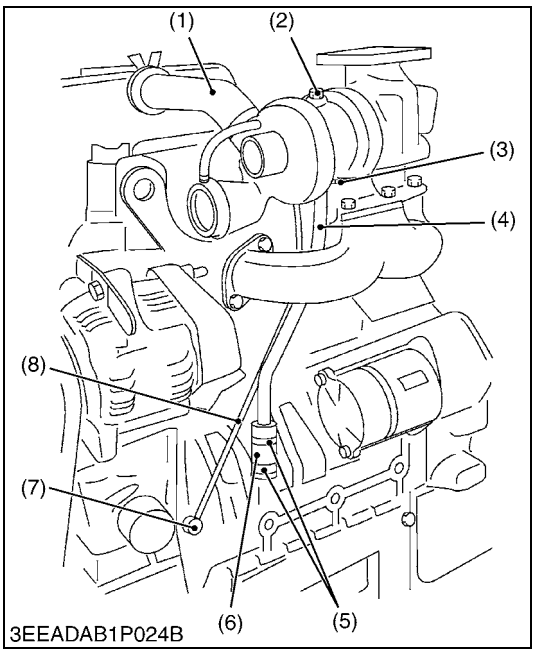

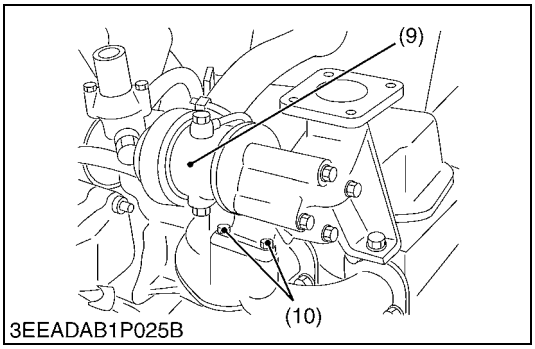

Turbocharger (equipped with Turbocharger Model)

CAUTION

- **While the engine is running and or just after it stops, the turbocharger is hot, be careful not to touch the turbocharger.**

NOTE

- **When detaching and attaching the turbocharger assembly, be very careful not to allow dust, dirt and other foreign matters in the oil pipes.**
- **When the turbocharger assembly has been replaced, pour fresh engine oil through the oil filter port of the turbocharger.**
- **Before starting the engine, make sure that the air cleaner is in position.**

1. Disconnect the inlet hose (1).
2. Remove the joint bolt (2), (7) and take off the oil pipe 1 (8).
3. Remove the bolts 1 (3) and release the clamp (5).
4. Disconnect the oil pipe 2 (4) and pipe 3 (6).
5. Remove the bolts 2 (10).
6. Take off the turbocharger assembly (9).

(When reassembling)

- Pour fresh engine oil through the oil filter port of the turbocharger.
- Replace the gaskets with new one.
- Be careful not to allow dust, dirt and other foreign matters in the oil pipes.

NOTE

- **Tape or plug all opening to prevent foreign matters from damaging the oil cavities in the turbocharger.**

(1) Inlet Hose
(2) Joint Bolt
(3) Bolt 1
(4) Oil Pipe 2
(5) Clamp
(6) Oil Pipe 3
(7) Joint Bolt
(8) Oil Pipe 1
(9) Turbocharger Assembly
(10) Bolt 2

W1021474

https://truckmanualshub.com/

(3) Cylinder Head and Valves

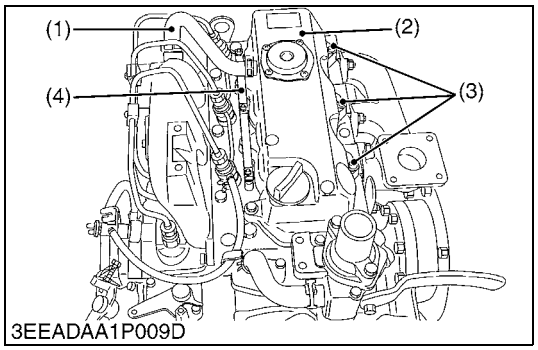

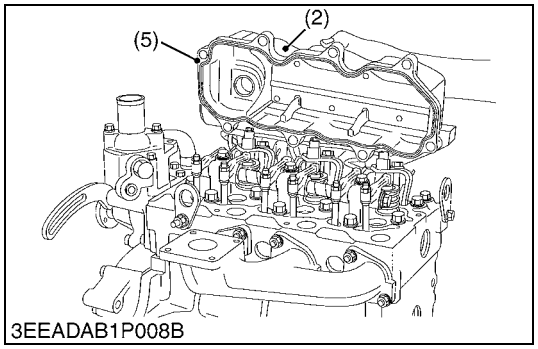

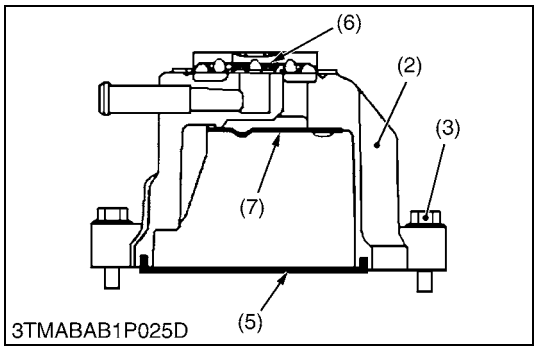

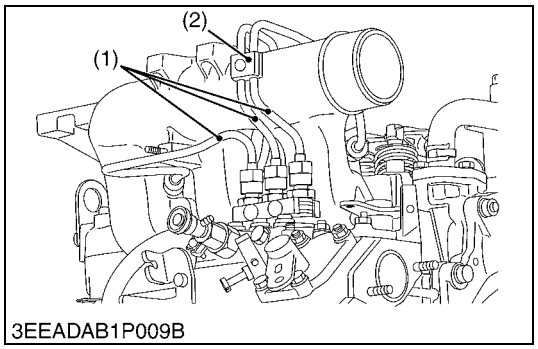

Cylinder Head Cover

1. Remove the lead (4).
2. Remove the breather hose (1).
3. Remove the head cover screws (3).
4. Remove the cylinder head cover (2).

(When reassembling)

- Check to see if the cylinder head cover gasket (5) is not defective.

Tightening torque	Cylinder head cover screw	9.81 to 11.2 N·m 1.00 to 1.15 kgf·m 7.24 to 8.31 lbf·ft

(1) Breather Hose
(2) Cylinder Head Cover
(3) Head Cover Screw
(4) Lead
(5) Cylinder Head Cover Gasket
(6) Breather Valve
(7) Plate

W1060460

Injection Pipes

1. Loosen the screws on the pipe clamps (2).
2. Detach the injection pipes (1).

(When reassembling)

- Blow out dust inside the pipes.

Tightening torque	Injection pipe retaining nut	D1503-M D1703-M D1803-M V2003-M V2203-M V2403-M V2403-M-T D1703-M-BG V2003-M-BG V2003-M-T-BG V2203-M-BG V2403-M-BG	25 to 34 N·m 2.5 to 3.5 kgf·m 18 to 25 lbf·ft
		D1803-M-DI V2403-M-DI V2403-M-DI-T	15 to 24 N·m 1.5 to 2.5 kgf·m 11 to 18 lbf·ft

(1) Injection Pipe
(2) Pipe Clamp

W1060970

https://truckmanualshub.com/

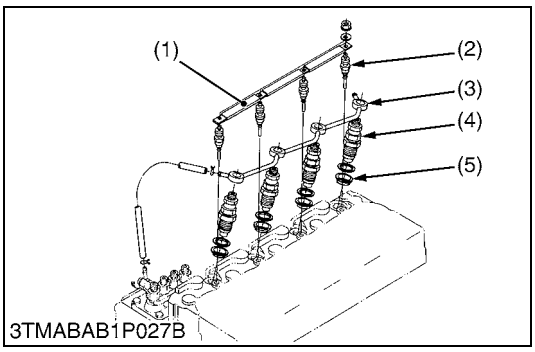

Nozzle Holder Assembly and Glow Plug

[D1503-M, D1703-M, D1803-M, V2003-M, V2203-M, V2403-M, V2403-M-T]
[D1703-M-BG, V2003-M-BG, V2003-M-T-BG, V2203-M-BG, V2403-M-BG]

1. Remove the overflow pipe assembly (3).
2. Remove the nozzle holder assemblies (4) using a 21 mm deep socket wrench.
3. Remove the copper gasket and heat seal (5).
4. Remove the glow plugs (2).

(When reassembling)

- Replace the copper gasket and heat seal with new one.

Tightening torque	Nozzle holder assembly	D1503-M D1703-M D1803-M V2003-M V2203-M V2403-M V2403-M-T D1703-M-BG V2003-M-BG V2003-M-T-BG V2203-M-BG V2403-M-BG	49 to 68 N·m 5.0 to 7.0 kgf·m 37 to 50 lbf·ft
	Overflow pipe assembly retaining nut		20 to 24 N·m 2.0 to 2.5 kgf·m 15 to 18 lbf·ft
	Glow plug		20 to 24 N·m 2.0 to 2.5 kgf·m 15 to 18 lbf·ft

(1) Lead
(2) Glow Plug
(3) Overflow Pipe Assembly
(4) Nozzle Holder Assembly
(5) Heat Seal

W1020917

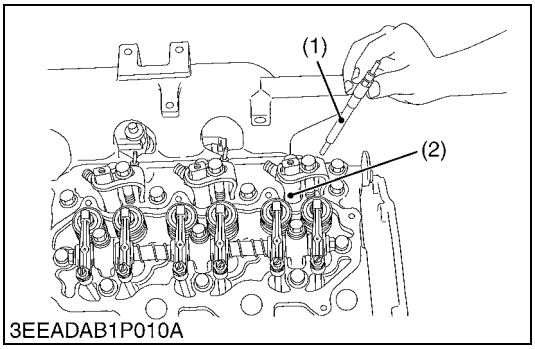

[D1803-M-DI, V2403-M-DI, V2403-M-DI-T]

1. Remove the overflow pipe assembly.
2. Remove the nozzle holder assemblies (2).
3. Remove the glow plugs (1).

(When reassembling)

- Replace the copper gasket with new one.

Tightening torque	Nozzle holder clamp screw	D1803-M-DI V2403-M-DI V2403-M-DI-T	26 to 29 N·m 2.6 to 3.0 kgf·m 19 to 21 lbf·ft
	Overflow pipe assembly retaining screw		9.81 to 11.2 N·m 1.00 to 1.15 kgf·m 7.24 to 8.31 lbf·ft
	Glow plug		20 to 24 N·m 2.0 to 2.5 kgf·m 15 to 18 lbf·ft

(1) Glow Plug
(2) Nozzle Holder Assembly

W1111628

https://truckmanualshub.com/

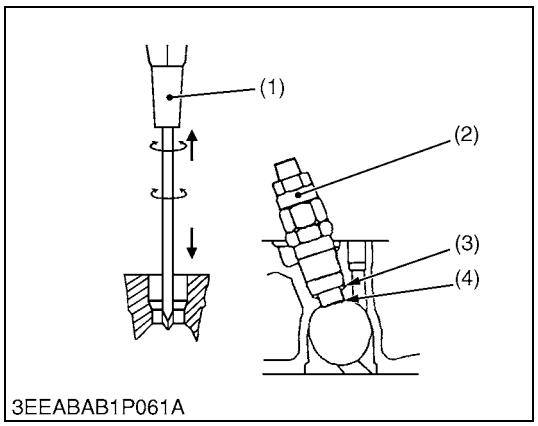

Nozzle Heat Seal Service Removal Procedure

[D1503-M, D1703-M, D1803-M, V2003-M, V2203-M, V2403-M, V2403-M-T]
[D1703-M-BG, V2003-M-BG, V2003-M-T-BG, V2203-M-BG, V2403-M-BG]

■ **IMPORTANT**
- **Use a plus (phillips head) screw driver (1) that has a diameter which is bigger than the heat seal hole (Approx. 6 mm (1/4 in.)).**

1. Drive screw driver (1) lightly into the heat seal hole.
2. Turn screw driver three or four times each way.
3. While turning the screw driver, slowly pull the heat seal (4) out together with the injection nozzle gasket (3).
4. If the heat seal drops, repeat the above procedure.

(When reassembling)
- Heat seal and injection nozzle gasket must be changed when the injection nozzle is removed for cleaning or for service.

(1) Plus Screw Driver
(2) Injection Nozzle
(3) Injection Nozzle Gasket
(4) Heat Seal

W1021255

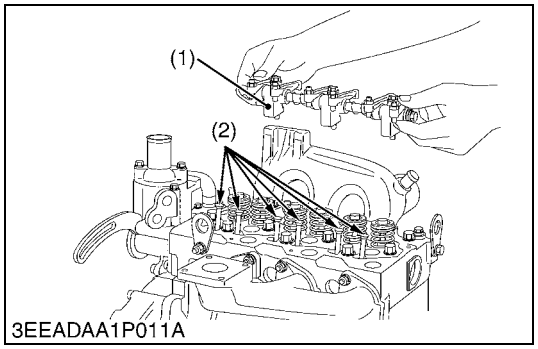

Rocker Arm and Push Rod

1. Remove the rocker arm bracket screws.
2. Detach the rocker arm assembly (1).
3. Remove the push rods (2).

(When reassembling)
- When putting the push rods (2) onto the tappets (3), check to see if their ends are properly engaged with the grooves.

■ **IMPORTANT**
- **After installing the rocker arm, be sure to adjust the valve clearance.**

Tightening torque	Rocker arm bracket screw	24 to 27 N·m 2.4 to 2.8 kgf·m 18 to 20 lbf·ft

(1) Rocker Arm Assembly
(2) Push Rod
(3) Tappet

W1021437

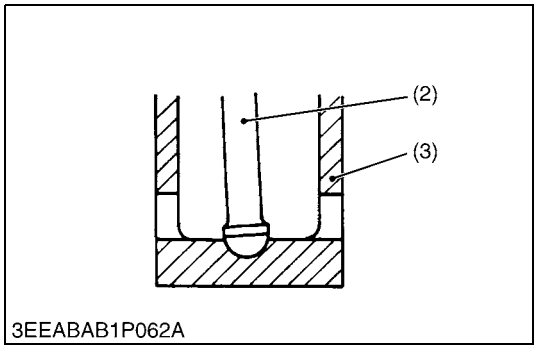

https://truckmanualshub.com/

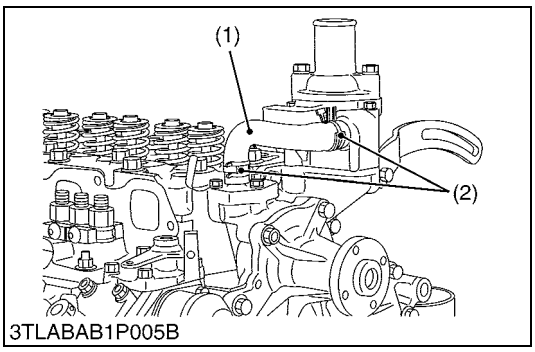

3TLABAB1P005B

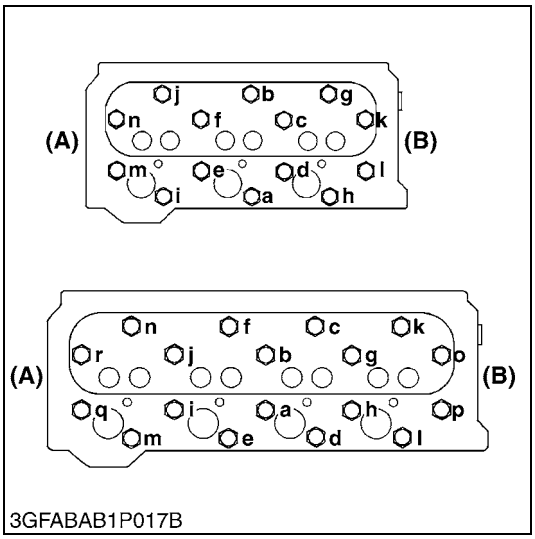

3GFABAB1P017B

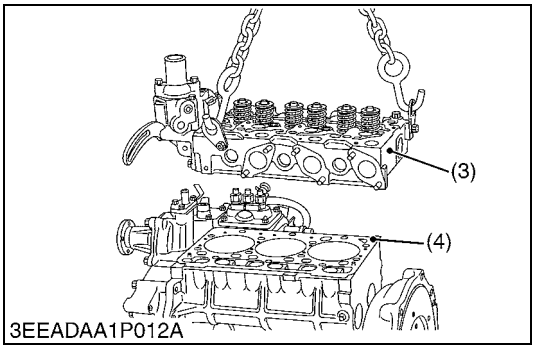

3EEADAA1P012A

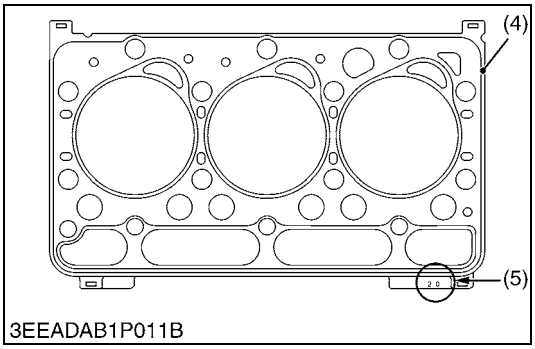

3EEADAB1P011B

Cylinder Head

1. Loosen the pipe clamp (2), and remove the water return pipe (1).
2. Remove the cylinder head screw in the order of **(n or r)** to **(a)**.
3. Lift up the cylinder head (3) to detach.
4. Remove the cylinder head gasket (4).

(When reassembling)

- Replace the cylinder head gasket (4) with a new one.
- Tighten the cylinder head screws after applying sufficient oil.
- Tighten the cylinder head screws in diagonal sequence starting from the center in the order of **(a)** to **(n or r)**.
- Tighten them uniformly, or the head may deform in the long run.

Tightening torque	Cylinder head screw	93.2 to 98.0 N·m 9.50 to 10.0 kgf·m 68.8 to 72.3 lbf·ft

■ **IMPORTANT**

- **To replace the cylinder head gasket (4), in advance make sure the marking (5) of cylinder head gasket in the original engine, and replace the same marking as the original cylinder head gasket.**

Gasket Marking & Code Number	Model			
	D1503-M	D1703-M D1803-M D1803-M-DI	V2003-M	V2203-M V2403-M V2403-M-T V2403-M-DI V2403-M-DI-T
15	1G720-03600	1G750-03600	1G464-03600	1G790-03600
20	1G720-03310	1G750-03310	1G464-03310	1G790-03310
25	1G720-03610	1G750-03610	1G464-03610	1G790-03610
30	1G720-03620	1G750-03620	1G464-03620	1G790-03620
35	1G720-03630	1G750-03630	1G464-03630	1G790-03630

Gasket Marking & Code Number	Model			
	D1703-M-BG	V2003-M-BG	V2003-M-T-BG	V2203-M-BG V2403-M-BG
15	1G750-03600	1G464-03600	1G770-03600	1G790-03600
20	1G750-03310	1G464-03310	1G770-03310	1G790-03310
25	1G750-03610	1G464-03610	1G770-03610	1G790-03610
30	1G750-03620	1G464-03620	1G770-03620	1G790-03620
35	1G750-03630	1G464-03630	1G770-03630	1G790-03630

(1) Return Pipe
(2) Pipe Clamp
(3) Cylinder Head
(4) Cylinder Head Gasket
(5) Marking

(n or r) to (a) : To Loosen
(a) to (n or r) : To Tighten
(A) Gear Case Side
(B) Flywheel Side

W1112015

https://truckmanualshub.com/

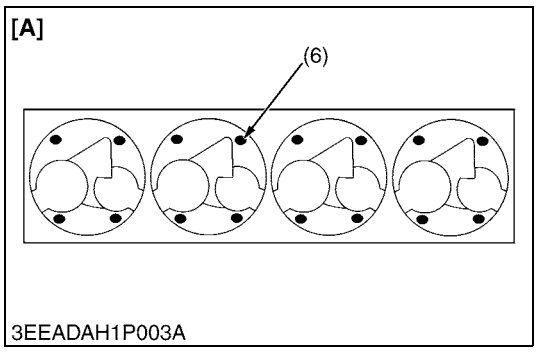

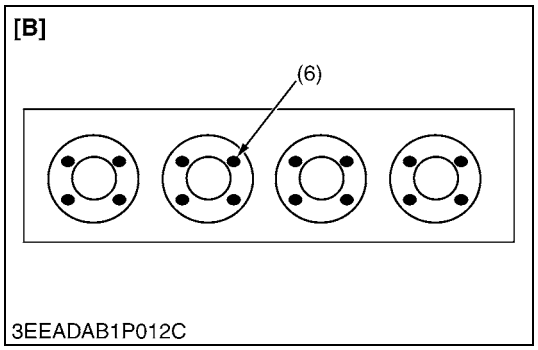

Cylinder Head (Continued)

■ **IMPORTANT**

- **When replacing piston, piston pin, small end bushing, connecting rod, or crankpin bearings, measure piston head's protrusion or recessing from the level of crankcase cylinder face (average of all pistons) after installing the pistons, and select the cylinder head gasket following the below table.**

Selecting the cylinder head gasket

1. Measure the piston head's protrusion or recessing from the crankcase cylinder face 4 spots per each piston (average of all pistons) using the dial gauge.
2. Select the suitable cylinder need gasket refer to the table below.

Gasket Size (Number)	Piston Protrusion	
	D1503-M, D1703-M D1803-M, V2003-M V2203-M, V2403-M V2403-M-T D1703-M-BG V2003-M-BG V2003-M-T-BG V2203-M-BG V2403-M-BG	D1803-M-DI V2403-M-DI V2403-M-DI-T
15	0.500 to 0.540 mm 0.0197 to 0.0212 in.	0.475 to 0.525 mm 0.0187 to 0.0206 in.
20	0.550 to 0.590 mm 0.0217 to 0.0232 in.	0.525 to 0.575 mm 0.0206 to 0.0227 in.
25	0.600 to 0.640 mm 0.0237 to 0.0251 in.	0.575 to 0.625 mm 0.0227 to 0.0246 in.
30	0.650 to 0.690 mm 0.0256 to 0.0271 in.	0.625 to 0.675 mm 0.0246 to 0.0266 in.
35	0.700 to 0.740 mm 0.0276 to 0.0291 in.	0.675 to 0.725 mm 0.0266 to 0.0285 in.

(6) Measuring Points

[A] D1503-M, D1703-M, D1803-M
V2003-M, V2203-M, V2403-M
V2403-M-T
D1703-M-BG, V2003-M-BG
V2003-M-T-BG, V2203-M-BG
V2403-M-BG
[B] D1803-M-DI, V2403-M-DI
V2403-M-DI-T

W1085632

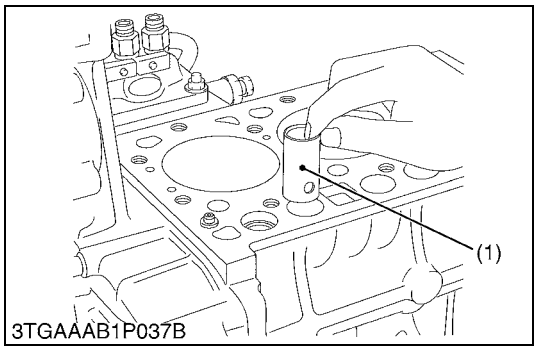

Tappets

1. Remove the tappets (1) from the crankcase.

(When reassembling)

- Visually check the contact between tappets and cams for proper rotation. If defect is found, replace tappets.
- Before installing the tappets, apply engine oil thinly around them.

■ **IMPORTANT**

- **Do not change the combination of tappet and tappet guide.**

(1) Tappet

W1022001

https://truckmanualshub.com/

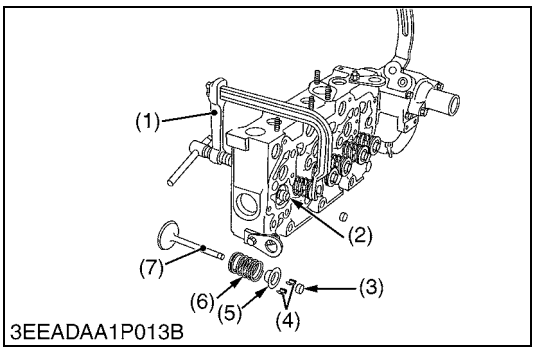

Valves

1. Remove the valve caps (3).
2. Remove the valve spring collet (4), pushing the valve spring retainer (5) by valve spring replacer (1).
3. Remove the valve spring retainer (5), valve spring (6) and valve stem seal (2).
4. Remove the valve (7).

(When reassembling)

- Wash the valve stem and valve guide hole, and apply engine oil sufficiently.
- After installing the valve spring collets (4), lightly tap the stem to assure proper fit with a plastic hammer.

■ **IMPORTANT**

- **Do not change the combination of valve and valve guide.**

(1) Valve Spring Replacer
(2) Valve Stem Seal
(3) Valve Cap
(4) Valve Spring Collet
(5) Valve Spring Retainer
(6) Valve Spring
(7) Valve

W1022102

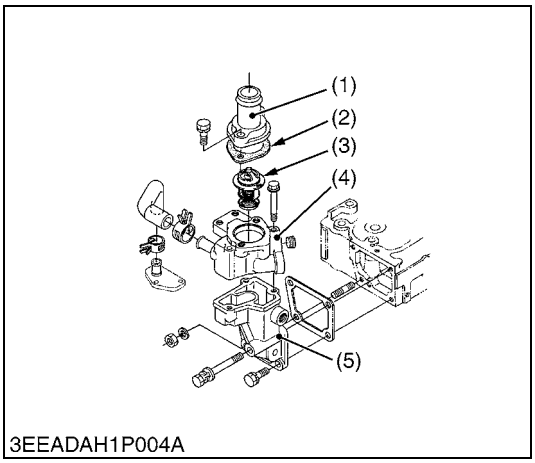

Thermostat Assembly

1. Remove the thermostat cover mounting screws, and remove the thermostat cover (1).
2. Remove the thermostat assembly (3).

(When reassembling)

- Replace the thermostat cover gasket (2) with new one.
- Apply a liquid gasket (Three Bond 1215 or equivalent) to the water flange 1 (4) and flange 2 (5)

(1) Thermostat Cover
(2) Thermostat Cover Gasket
(3) Thermostat Assembly
(4) Water Flange 1
(5) Water Flange 2

W1105115

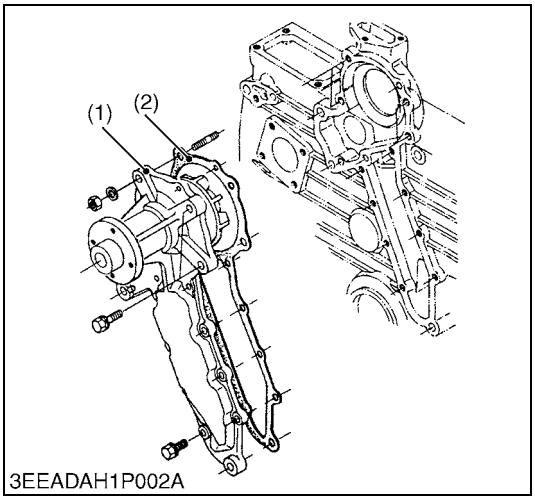

Water Pump Assembly (If necessary)

1. Remove the water pump assembly (1) from the gear case.

(When reassembling)

- Replace the gasket (2) with new one.

(1) Water Pump Assembly
(2) Gasket

W1051957

https://truckmanualshub.com/

(4) Gear Case and Timing Gears

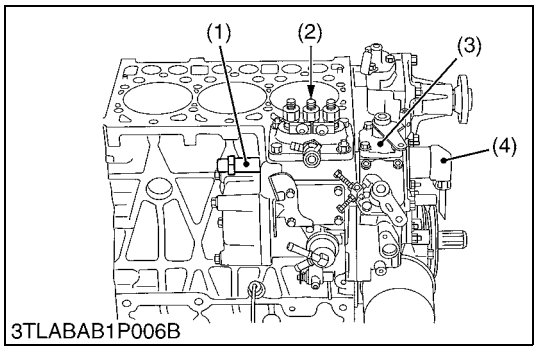

3TLABAB1P006B

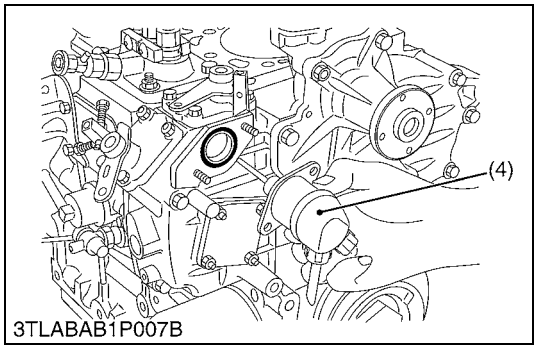

3TLABAB1P007B

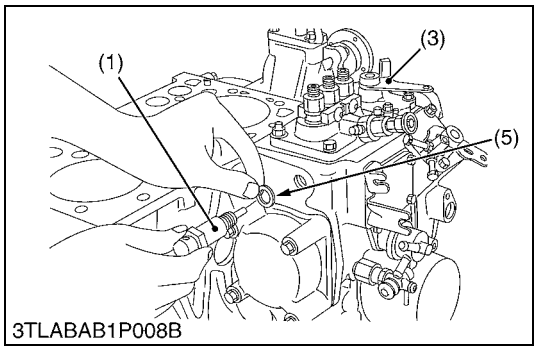

3TLABAB1P008B

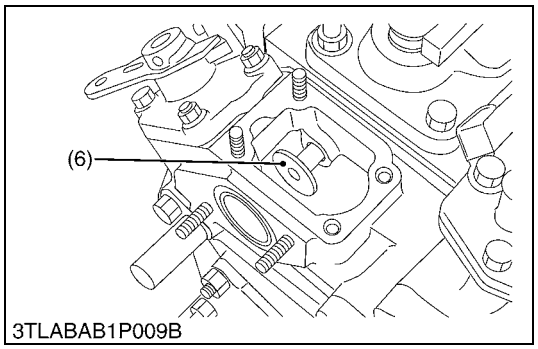

3TLABAB1P009B

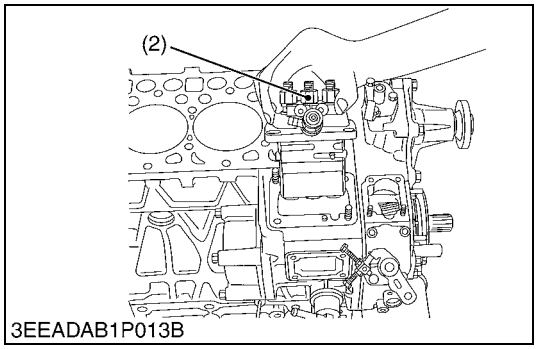

3EEADAB1P013B

Injection Pump (for Non Turbocharger Model)

1. Remove the solenoid (4) and hi-idling body (1).
2. Remove the engine stop lever (3) and solenoid guide (6).
3. Remove the fuel injection pump assembly (2).

■ **IMPORTANT**

- **Before removing the injection pump assembly (2), be sure to remove the solenoid (4), hi-idling body (1), engine stop lever (3) and solenoid guide (6).**

(When reassembling)

- Before attaching the solenoid (4), hi-idling body (1) and solenoid guide (6), install the injection pump first into position.
- Replace the hi-idling body gasket (5) with a new one.
- Before fitting the stop lever (3) to the gear case, install the solenoid guide (6) first into position. Then attach the stop lever and use it to see if it functions well.
- When installing the solenoid (4), be careful to keep the O-ring in place.
- Be sure to insert the push rod of the solenoid into the hole at the center of the solenoid guide (6).

Tightening torque	Hi-idling body	45 to 49 N·m 4.5 to 5.0 kgf·m 33 to 36 lbf·ft

(1) Hi-idling Body
(2) Injection Pump Assemply
(3) Stop Lever
(4) Slenoid
(5) Hi-idling Body Gasket
(6) Solenoid Guide

W1023686

https://truckmanualshub.com/

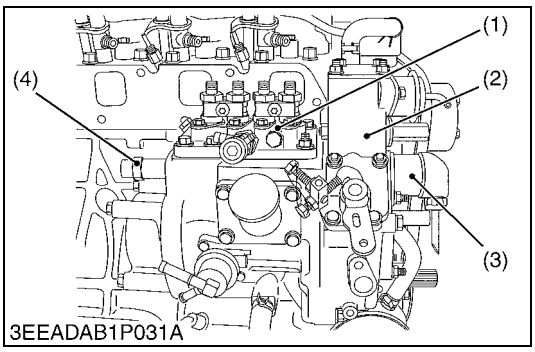

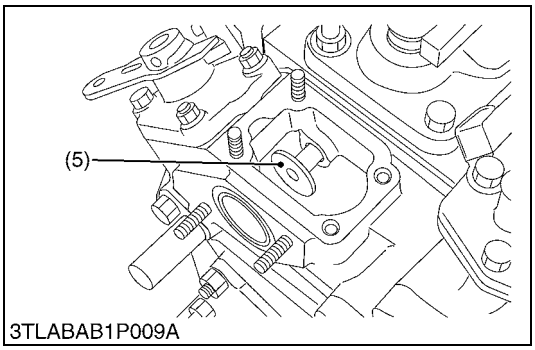

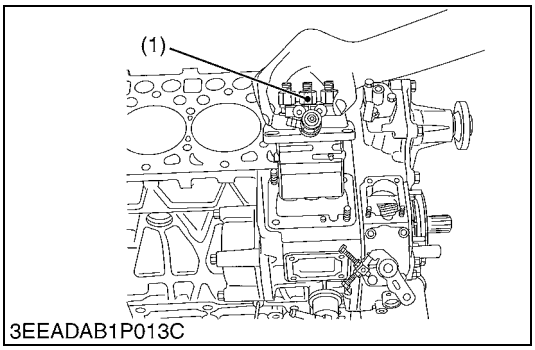

Injection Pump (for Turbocharger Model)

1. Remove the boost compensator assembly (2).
2. Remove the hi-idling body (4).
3. Remove the solenoid (3).
4. Remove the solenoid guide (5).
5. Remove the injection pump assembly (1).

■ **IMPORTANT**

- **Before removing the injection pump assembly (1), be sure to remove the boost compensator assembly (2), hi-idling body (4), solenoid (3) and solenoid guide (5).**

(When reassembling)

- Before attaching the boost compensator assembly (2), hi-idling body (4), solenoid (3) and solenoid guide (5), install the injection pump first into position.
- Replace the hi-idling body gasket with a new one.
- Before fitting the boost compensator assembly (2) to the gear case, make sure that the solenoid guide (5) is at the initial position.
- When installing the solenoid (3), be careful to keep the O-ring in place.
- Be sure to insert the push rod of the solenoid into the hole at the center of the solenoid guide (5).

■ **IMPORTANT**

- **If you replace new boost compensator, it is necessary to adjust it.**
  Get the adjustment procedure from KUBOTA.

Tightening torque	Hi-idling body	45 to 49 N·m 4.5 to 5.0 kgf·m 33 to 36 lbf·ft

(1) Injection Pump Assembly
(2) Boost Compensator Assembly
(3) Solenoid
(4) Hi-idling Body
(5) Solenoid Guide

W1032355

https://truckmanualshub.com/

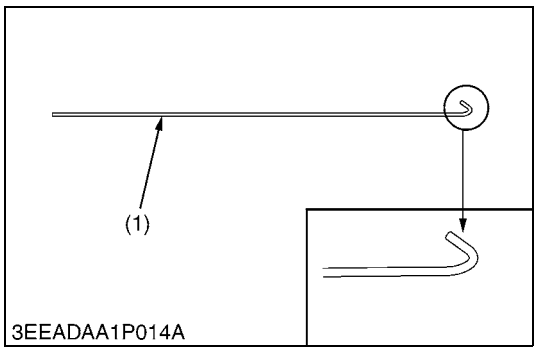

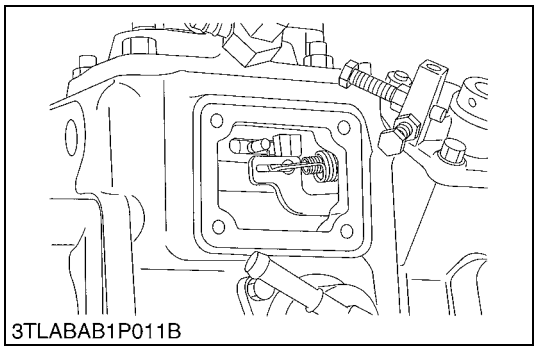

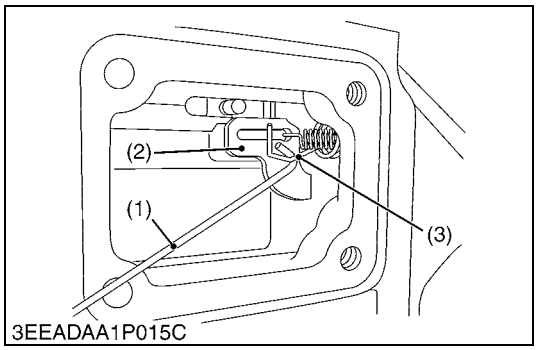

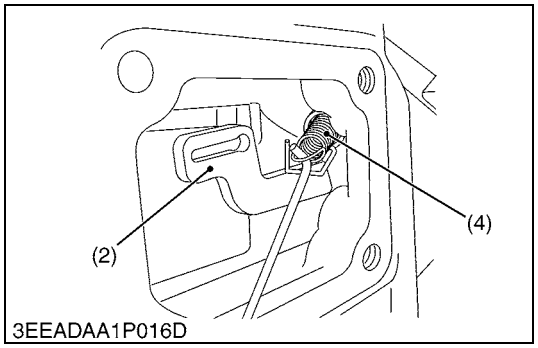

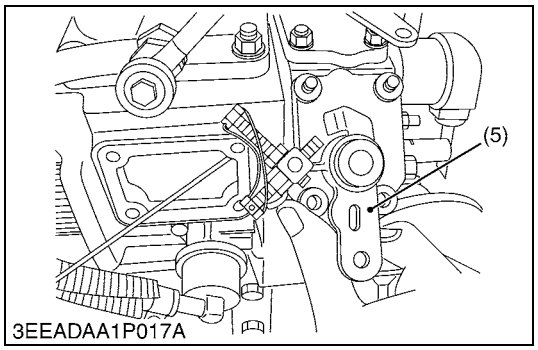

Governor Springs and Speed Control Plate

■ **NOTE**

- **Specific tool (1) :**
  1.2 mm diameter hard wire with its end hooked, overall length 200 mm (7.87 in.).
  The tip of wire is bent like the hook to hang governor springs.

1. Remove the injection pump cover.
2. Remove the speed control plate (6) mounting nuts and bolts.
3. Using the specific tool (1), undo the large governor spring (3) from the fork lever (2).
4. Using the specific tool (1), undo the small governor spring (4) from the fork lever (2).
5. Set the speed control lever (5) as shown in the figure.
6. Take out the speed control plate (6) with care not to let the large (3) and small (4) governor springs come off this plate and fall in to the gear case.

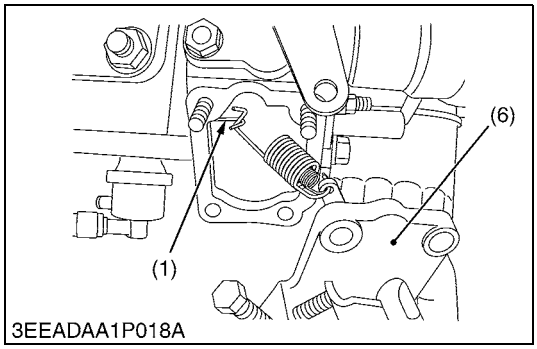

(1) Specific Tool
(2) Fork Lever
(3) Large Governor Spring
(4) Small Governor Spring
(5) Speed Control Lever
(6) Speed Control Plate

W1148604

https://truckmanualshub.com/

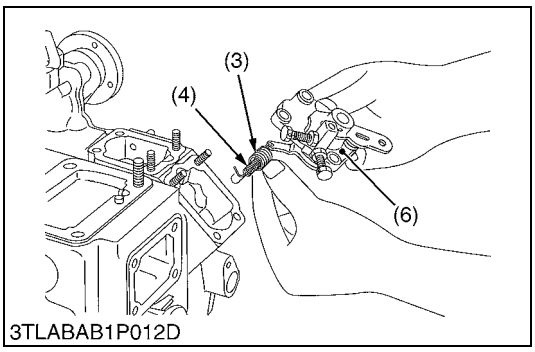

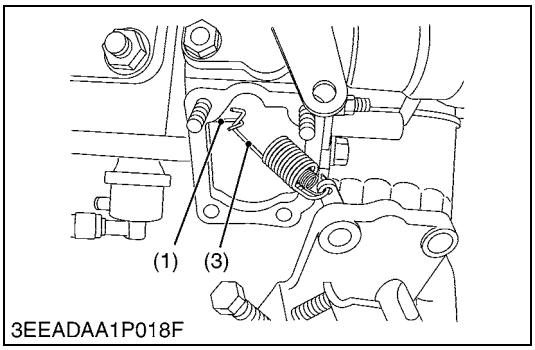

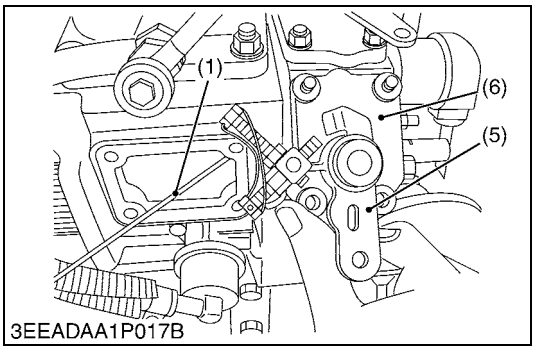

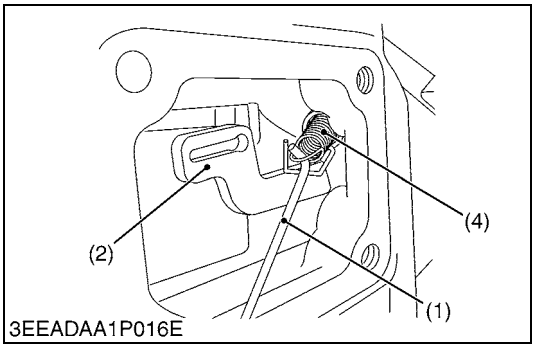

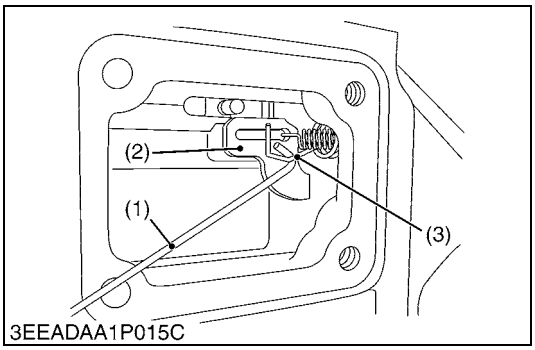

Governor Springs and Speed Control Plate (Continued)

(When reassembling)

- Hook the small spring (4) first and then the large governor spring (3) on the speed control plate (6).
- Put the specific tool (1) from the injection pump side to catch the large governor spring (3). Keep this spring slightly extended and place the speed control plate (6) in its specified position.
- Using the specific tool (1), hook the small governor spring (4) onto the fork lever (2).

■ **NOTE**

- **Be careful not to stretch the small governor spring (4) too long because otherwise it may get deformed permanently.**
- **Using the specific tool (1), hook the large governor spring (3) onto the fork lever (2).**
- **Make sure both the governor springs (3), (4) are tight on the fork lever (2).**
- **Apply and tighten up the two bolts and two nuts on the speed control plate (6).**
- **Check that the speed control lever (5) positions low idle, after assembling governor springs.**
- **Check that the speed control lever (5) returns to the high idle position rather than the low idle position, after moving the lever to the maximum speed position.**
- **Finally attach the injection pump cover in position.**

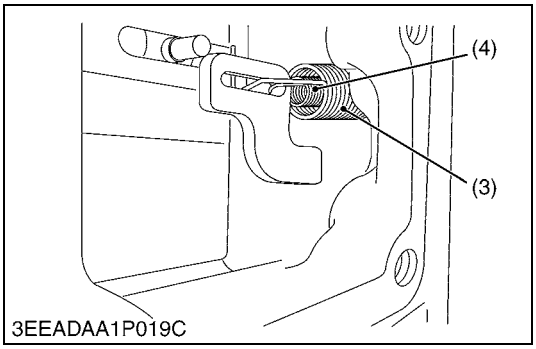

(1) Specific Tool
(2) Fork Lever
(3) Large Governor Spring
(4) Small Governor Spring
(5) Speed Control Lever
(6) Speed Control Plate

W1152334

https://truckmanualshub.com/

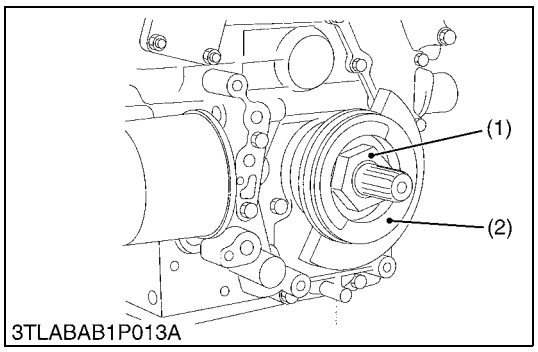

3TLABAB1P013A

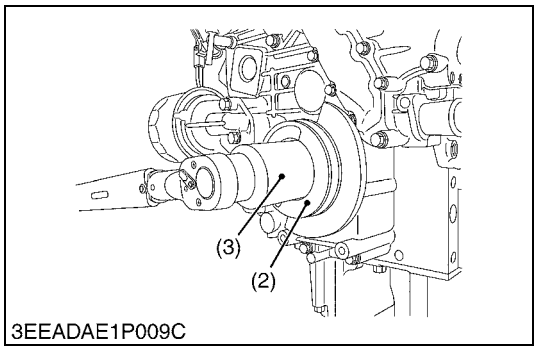

3EEADAE1P009C

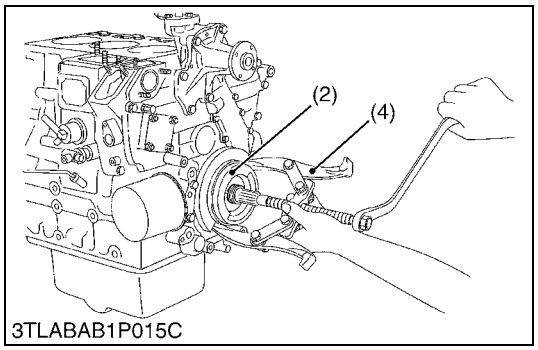

3TLABAB1P015C

Fan Drive Pulley

1. Lock the flywheel not to turn using the flywheel stopper.
2. Remove the fan drive pulley mounting nut (1) using 46 mm deep socket wrench (3).
3. Remove the fan drive pulley (2) with gear puller (4).
4. Remove the feather key.

(When reassembling)

- Apply grease to the splines of coupling.

Tightening torque	Fan drive pulley mounting nut	138 to 156 N·m 14.0 to 16.0 kgf·m 102 to 115 lbf·ft

(1) Nut
(2) Fan Drive Pulley
(3) 46 mm Deep Socket Wrench
(4) Gear Puller

W1024348

https://truckmanualshub.com/

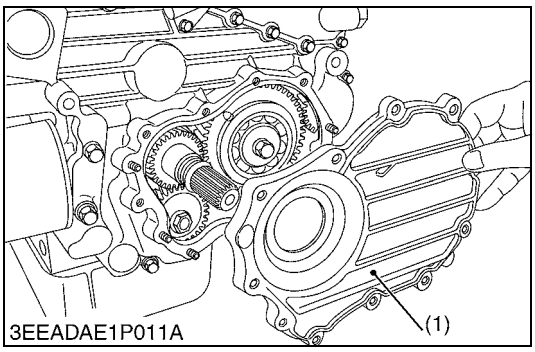

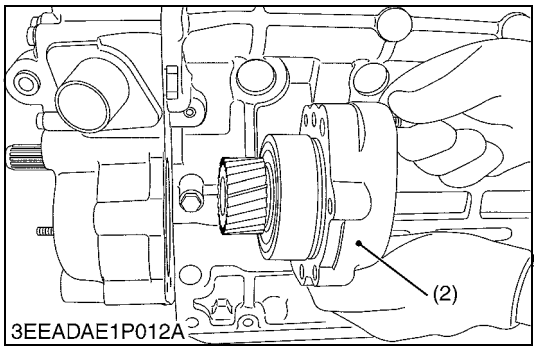

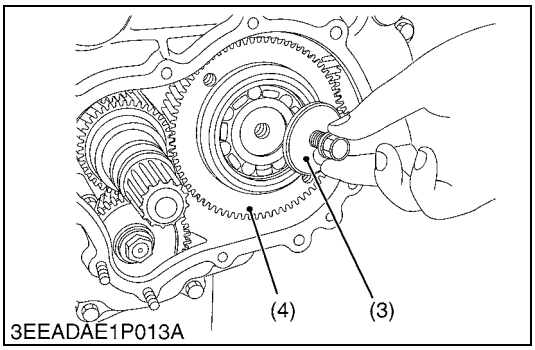

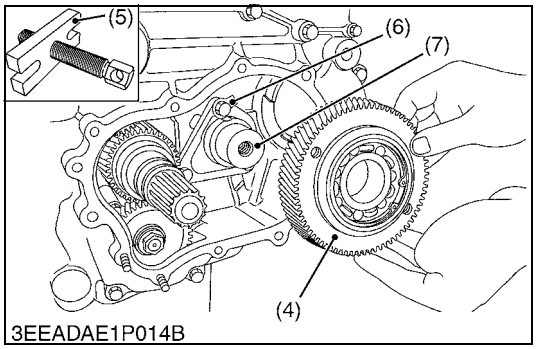

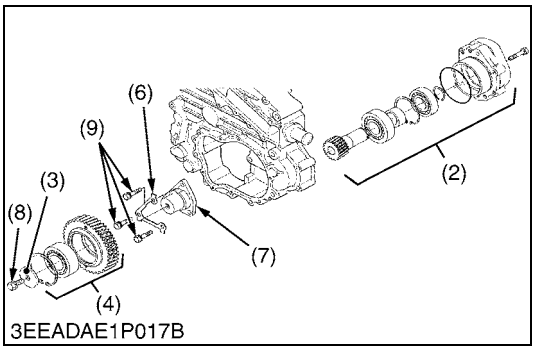

Idle Gear 2 and Hydraulic Pump Base Assembly (for Side PTO Model)

1. Remove the hour meter gear case (if equipped).
2. Remove the gear case cover (1).
3. Remove the hydraulic pump base assembly (2).
4. Remove the idle gear 2 stopper (3).
5. Remove the idle gear 2 (4) using the puller (5).
6. Remove the idle gear 2 shaft (7).

(When reassembling)

- Replace the washer (6) and gear case cover gasket.
- Replace the gear case cover gasket with new one.

Tightening torque	Idle gear 2 shaft set screw	24 to 27 N·m 2.4 to 2.8 kgf·m 18 to 20 lbf·ft
	Idle gear 2 stopper set screw	49 to 55 N·m 5.0 to 5.7 kgf·m 37 to 41 lbf·ft

(1) Gear Case Cover
(2) Hydraulic Pump Base Assembly
(3) Idle Gear 2 Stopper
(4) Idle Gear 2
(5) Puller
(6) Washer
(7) Idle Gear 2 Shaft
(8) Idle Gear 2 Stopper Set Screw
(9) Idle Gear 2 Shaft Set Screw

W1034122

https://truckmanualshub.com/

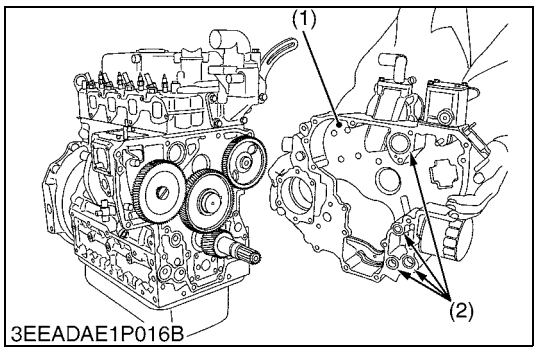

Gear Case (for Side PTO Model)

1. Remove the gear case (1).
2. Remove the O-rings (2).

(When reassembling)

- Replace the gear case gasket and O-rings.
- Check to see if there are four O-rings (2) inside the gear case (1).
- Apply a thin film of engine oil to the oil seal, and install it, noting the lip come off.
- Before installing the gear case gasket, apply a non-drying adhesive.

(1) Gear Case
(2) O-rings

W1034671

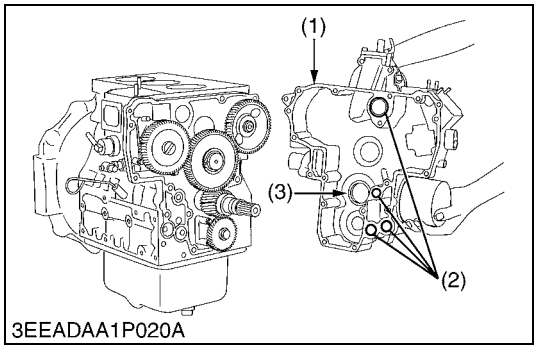

Gear Case

1. Remove the hour meter gear case (if equipped).
2. Remove the gear case (1).
3. Remove the O-rings (2).

(When reassembling)

- Replace the gear case gasket and O-rings (2).
- Replace the hour meter gear case gasket with new one.
- Check to see if there are four O-rings (2) inside the gear case (1).
- Apply a thin film of engine oil to the oil seal (3), and install it, noting the lip come off.
- Before installing the gear case gasket, apply a non-drying adhesive.

(1) Gear Case
(2) O-ring
(3) Oil Seal

W1024531

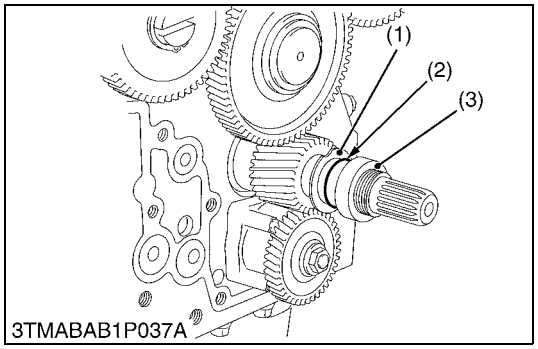

Crankshaft Oil Slinger

1. Remove the crankshaft collar (3).
2. Remove the O-ring (2).
3. Detach the crankshaft oil slinger (1).

(When reassembling)

- Insert the crankshaft collar (3) after install the gear case to cylinder body.

(1) Crankshaft Oil Slinger
(2) O-ring
(3) Crankshaft Collar

W1024731

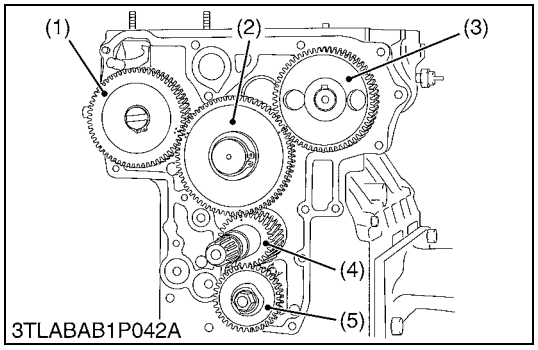

Idle Gear

1. Remove the external snap ring.
2. Detach the idle gear collar.
3. Detach the idle gear (2).

(When reassembling)

- Check to see each gear is aligned with its aligning mark
  - Idle gear (2) and crank gear (4)
  - Idle gear (2) and cam gear (3)
  - Idle gear (2) and injection pump gear (1)

(1) Injection Pump Gear
(2) Idle Gear
(3) Cam Gear
(4) Crank Gear
(5) Oil Pump Drive Gear

W1024941

https://truckmanualshub.com/

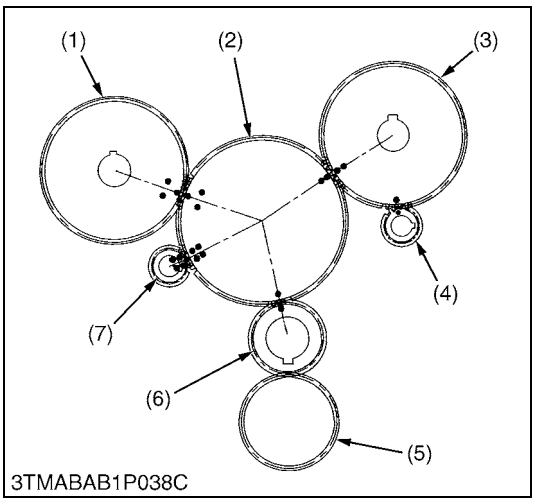

Idle Gear (For Balancer Model)

1. Remove the external snap ring.
2. Detach the idle gear collar.
3. Detach the idle gear (2).

(When reassembling)

- Check to see each gear is aligned with its aligning mark:
  - Idle gear (2) and crank gear (6), cam gear (3) and balancer gear (4)
  - Cam gear (3) and idle gear (2)
  - Idle gear (2) and injection pump gear (1)
  - Idle gear (2) and balancer gear (7)

(1) Injection Pump Gear
(2) Idle Gear
(3) Cam Gear
(4) Balancer Gear
(5) Oil Pump Drive Gear
(6) Crank Gear
(7) Balancer Gear

W1097988

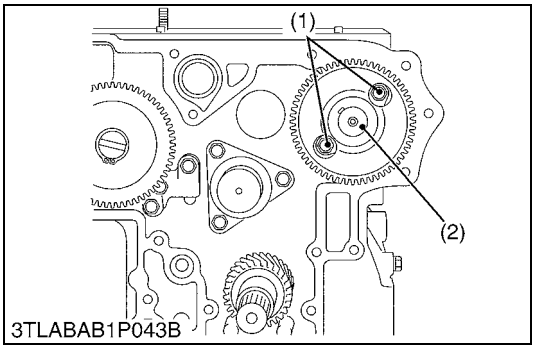

Camshaft

1. Remove the camshaft set screws (1) and draw out the camshaft (2).

(When reassembling)

- When installing the idle gear, be sure to align the alignment marks on gears.

Tightening torque	Camshaft set screw	24 to 27 N·m 2.4 to 2.8 kgf·m 18 to 20 lbf·ft

(1) Camshaft Set Screw
(2) Camshaft

W1025098

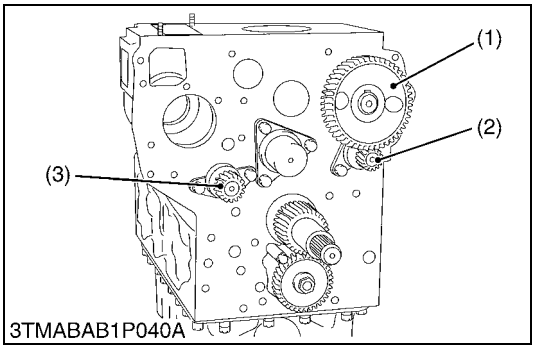

Camshaft and Balancer Shaft (For Balancer Model)

1. Remove the camshaft set screws and draw out the camshaft (1).
2. Remove the balancer shaft 1 (2) set bolts and draw out the balancer shaft 1 (2).
3. Remove the balancer shaft 2 (3) set bolts and draw out the balancer shaft 2 (3).

(When reassembling)

- When install the balancer shaft 1 (2) and 2 (3), be sure to place the 1st. and 4th. cylinders piston at the top dead center in compression then, align all mating marks on each gear to assemble the timing gears, set the idle gear last.

Tightening torque	Camshaft set screw	24 to 27 N·m 2.4 to 2.8 kgf·m 18 to 20 lbf·ft
	Balancer shaft set bolt	24 to 27 N·m 2.4 to 2.8 kgf·m 18 to 20 lbf·ft

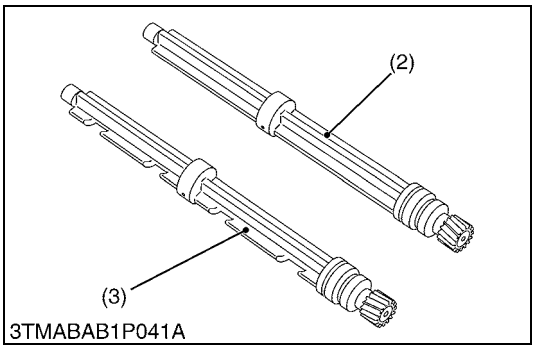

(1) Camshaft
(2) Balancer Shaft 1
(3) Balancer Shaft 2

W1099079

https://truckmanualshub.com/

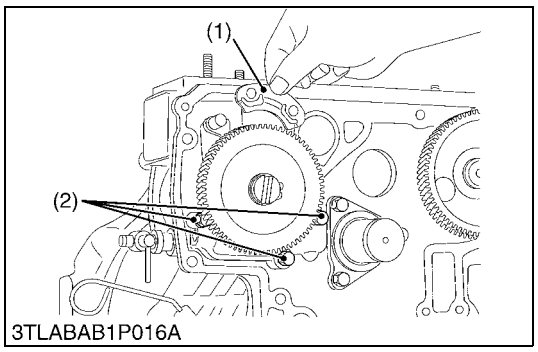

3TLABAB1P016A

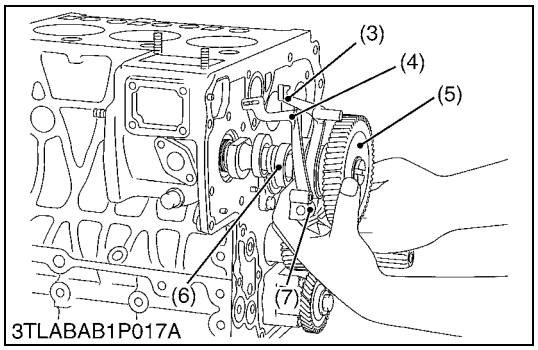

3TLABAB1P017A

Fuel Camshaft and Fork Lever Assembly

1. Remove the fuel feed pump.
2. Detach the fuel camshaft stopper (1).
3. Remove the three fork lever holder mounting screws (2).
4. Draw out the fuel camshaft assembly (5), (6) and fork lever assembly (3), (4), (7) at the same time.

(When reassembling)

- After installation, check to see that the fork lever 1 (3) and lever 2 (4) are fixed to the fork lever shaft, and that they can turn smoothly in the holder (7).

(1) Fuel Camshaft Stopper
(2) Fork Lever Holder Mounting Screws
(3) Fork Lever 1
(4) Fork Lever 2
(5) Injection Pump Gear
(6) Fuel Camshaft
(7) Fork Lever Holder

W1025309

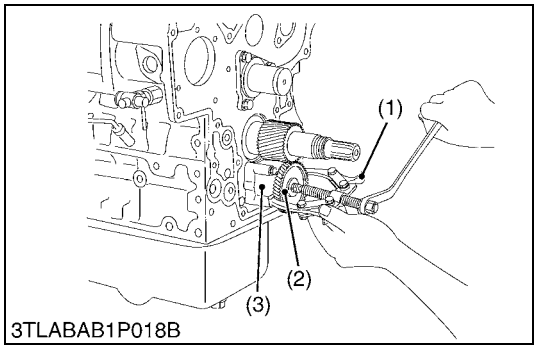

3TLABAB1P018B

Oil Pump

1. Remove the nut.
2. Draw out the oil pump drive gear (2) with gear puller (1).
3. Remove the four oil pump mounting screws. Detach the oil pump (3).

(1) Gear Puller
(2) Oil Pump Drive Gear
(3) Oil Pump

W1025581

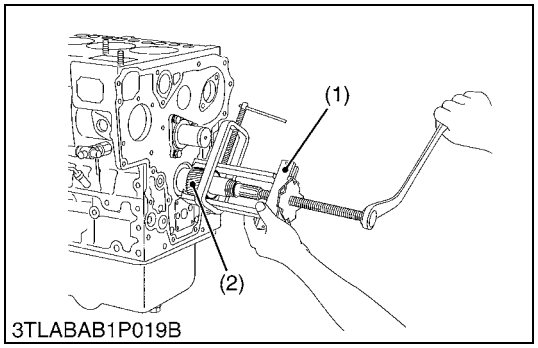

3TLABAB1P019B

Crank Gear

1. Draw out the crank gear (2) with a puller (1).
2. Remove the feather key.

(1) Crank Puller
(2) Crank Gear

W1025476

https://truckmanualshub.com/

(5) Piston and Connecting Rod

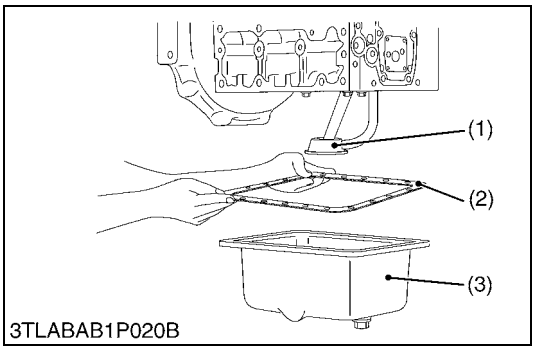

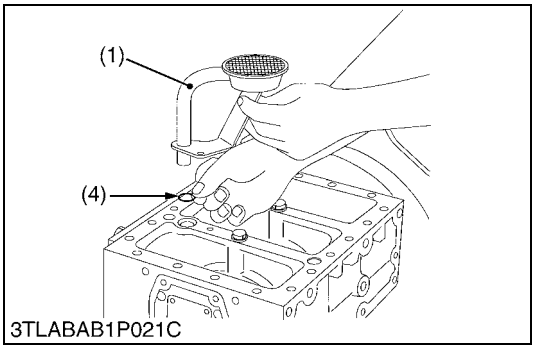

Oil Pan and Oil Strainer

1. Remove the oil pan mounting screws.
2. Remove the oil pan (3) by lightly tapping the rim of the pan with a wooden hammer.
3. Remove the oil pan gasket (2).
4. Remove the oil strainer (1) and O-ring (4).

(When reassembling)

- After cleaning the oil strainer (1), check to see that the filter mesh in clean, and install it.
- Visually check the O-ring (4), apply engine oil, and install it.
- Securely fit the O-ring (4) to the oil strainer (1).
- Replace the oil pan gasket (2) with new one.
- To avoid uneven tightening, tighten oil pan mounting screws in diagonal order from the center.

(1) Oil Strainer
(2) Oil Pan Gasket
(3) Oil Pan
(4) O-ring

W1025687

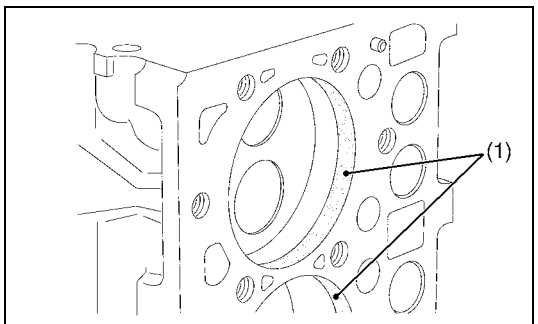

3TLABAB1P022A

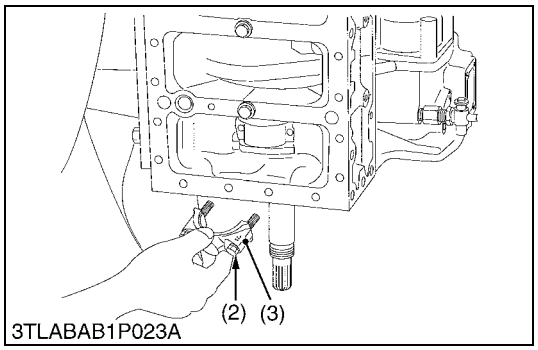

3TLABAB1P023A

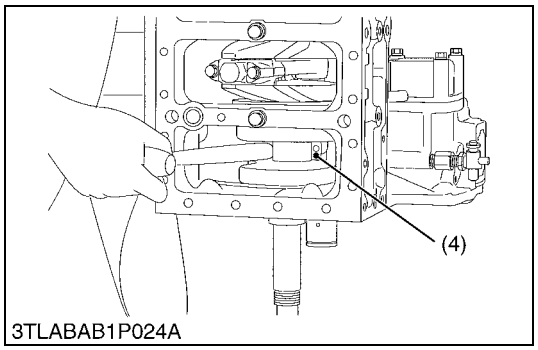

3TLABAB1P024A

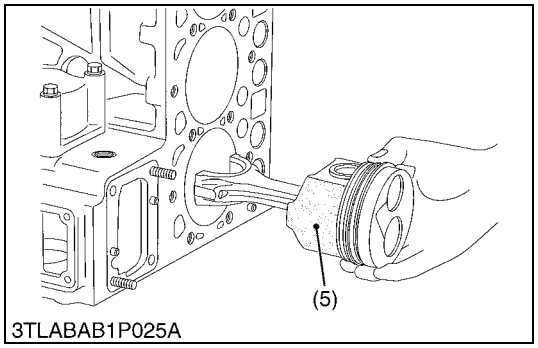

3TLABAB1P025A

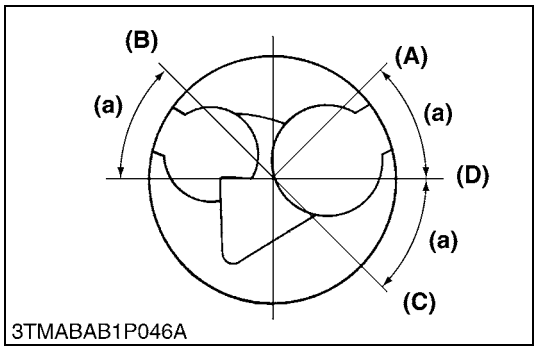

3TMABAB1P046A

Pistons

[D1503-M, D1703-M, D1803-M, V2003-M, V2203-M, V2403-M, V2403-M-T]
[D1703-M-BG, V2003-M-BG, V2003-M-T-BG, V2203-M-BG, V2403-M-BG]

1. Completely clean carbon (1) in the cylinders.
2. Remove the connecting rod cap (3).
3. Turn the flywheel and bring the piston to top dead center.
4. Draw out the piston upward by lightly tapping it from the bottom of the crankcase with the grip of a hammer.
5. Draw out the other piston in the same method as above.

(When reassembling)

- Before inserting piston into the cylinder, apply enough engine oil to the piston.
- When inserting the piston into the cylinder, face the mark on the connecting rod to the injection pump.

■ **IMPORTANT**

- **Do not change the combination of cylinder and piston. Make sure of the position of each piston by marking. For example, mark "1" on the No. 1 piston.**
- **Place the piston rings with their gaps at 0.79 rad (45 °) from the piston pin's direction as shown in the figure.**
- **Carefully insert the pistons using a piston ring compressor (6).**
- **When inserting the piston in place, be careful not to get the molybdenum disulfide coating torn off its skirt. This coating is useful in minimizing the clearance with the cylinder liner. Just after the piston pin has been press-fitted, in particular, the piston is still hot and the coating is easy to peel off. Wait until the piston cools down.**

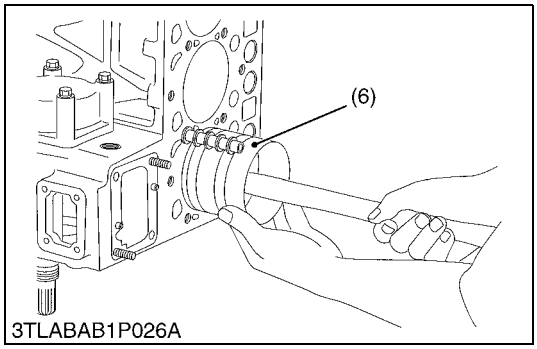

3TLABAB1P026A

Tightening torque	Connecting rod screw	45 to 49 N·m 4.5 to 5.0 kgf·m 33 to 36 lbf·ft

(1) Carbon
(2) Connecting Rod Screw
(3) Connecting Rod Cap
(4) Connecting Rod
(5) Molybdenum Disulfide Coating in Piston Skirt
(6) Piston Ring Compressor

(A) Top Ring Gap
(B) Second Ring Gap
(C) Oil Ring Gap
(D) Piston Pin Hole

(a) 0.79 rad (45 °)

W1026141

https://truckmanualshub.com/

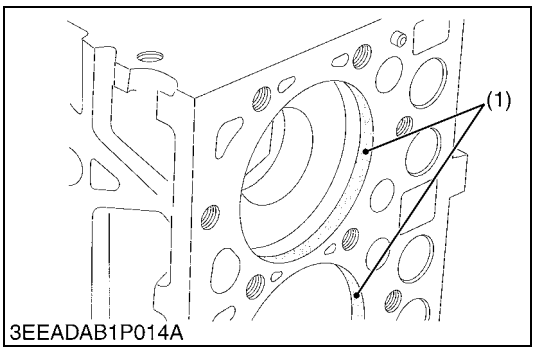

3EEADAB1P014A

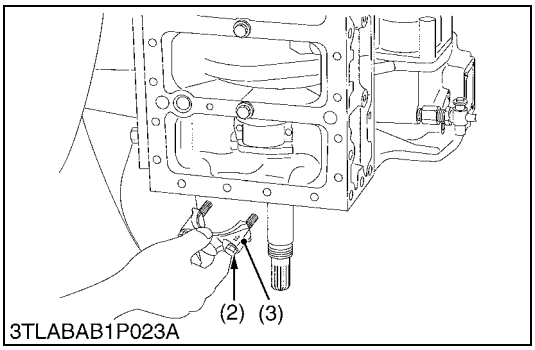

3TLABAB1P023A

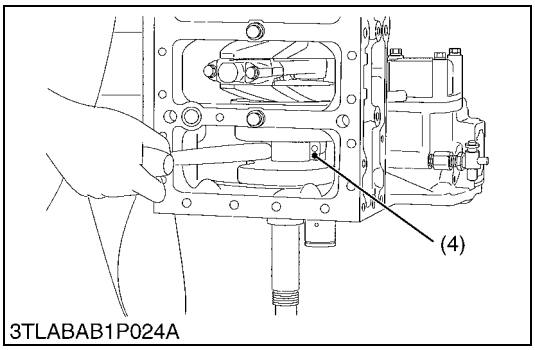

3TLABAB1P024A

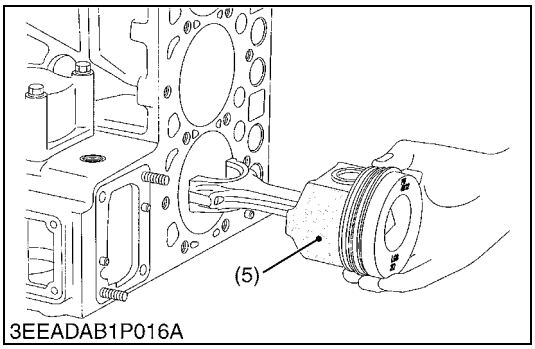

3EEADAB1P016A

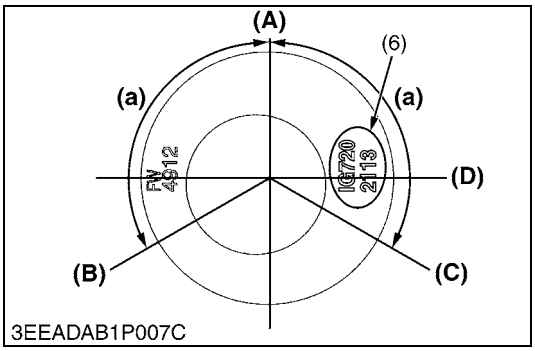

3EEADAB1P007C

Pistons

[D1803-M-DI, V2403-M-DI, V2403-M-DI-T]

1. Completely clean carbon (1) in the cylinders.
2. Remove the connecting rod cap (3).
3. Turn the flywheel and bring the piston to top dead center.
4. Draw out the piston upward by lightly tapping it from the bottom of the crankcase with the grip of a hammer.
5. Draw out the other piston in the same method as above.

(When reassembling)

- Before inserting piston into the cylinder, apply enough engine oil to the piston.
- When inserting the piston into the cylinder, face the mark on the connecting rod to the injection pump.

■ **IMPORTANT**

- **Do not change the combination of cylinder and piston. Make sure of the position of each piston by marking. For example, mark "1" on the No. 1 piston.**
- **Place the piston rings with their gaps at 2.09 rad (120 °) from the piston pin's direction as shown in the figure.**
- **Carefully insert the pistons using a piston ring compressor (7).**
- **When inserting the piston in place, be careful not to get the molybdenum disulfide coating torn off its skirt. This coating is useful in minimizing the clearance with the cylinder liner. Just after the piston pin has been press-fitted, in particular, the piston is still hot and the coating is easy to peel off. Wait until the piston cools down.**
- **When replacing the piston, look at the code number (6) marked on top of the piston. Use a replacement piston with the same code number.**

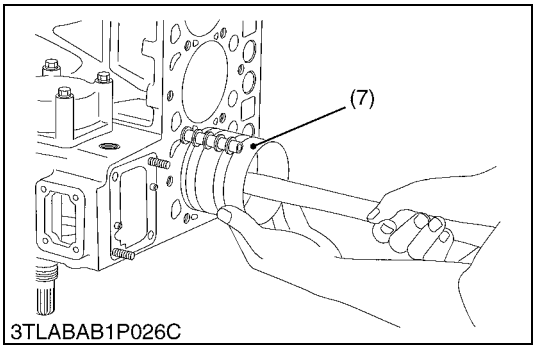

3TLABAB1P026C

Tightening torque	Connecting rod screw	45 to 49 N·m 4.5 to 5.0 kgf·m 33 to 36 lbf·ft

(1) Carbon
(2) Connecting Rod Screw
(3) Connecting Rod Cap
(4) Connecting Rod
(5) Molybdenum Disulfide Coating in Piston Skirt
(6) Code Number
(7) Piston Ring Compressor

(A) Top Ring Gap
(B) Second Ring Gap
(C) Oil Ring Gap
(D) Piston Pin Hole

(a) 2.09 rad (120 °)

W1126904

https://truckmanualshub.com/

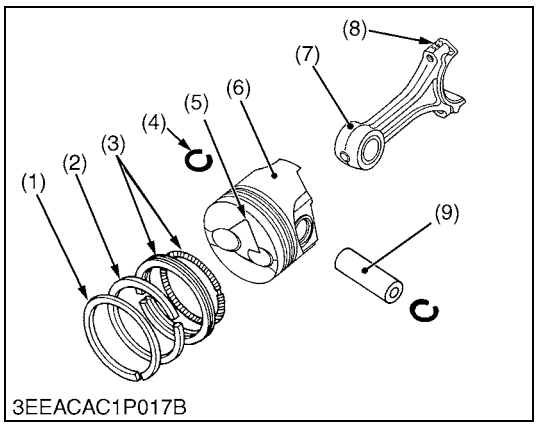

3EEACAC1P017B

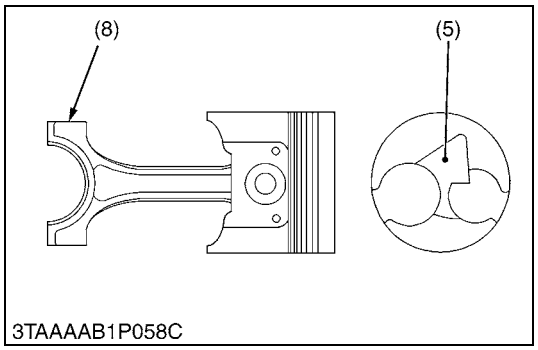

3TAAAAB1P058C

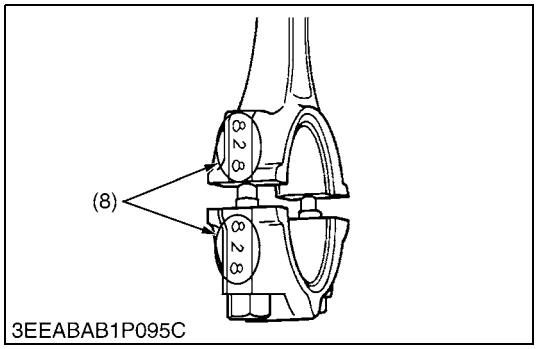

3EEABAB1P095C

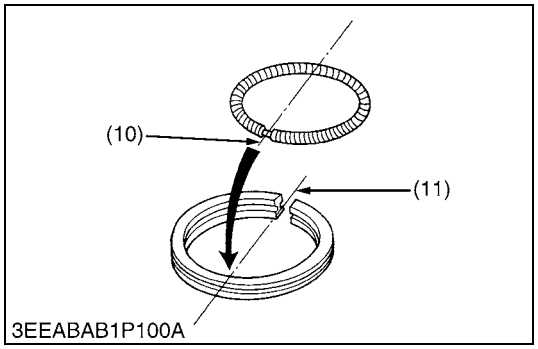

3EEABAB1P100A

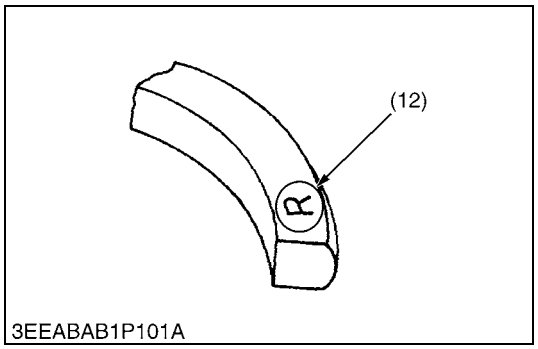

3EEABAB1P101A

Piston Ring and Connecting Rod

[D1503-M, D1703-M, D1803-M, V2003-M, V2203-M, V2403-M, V2403-M-T]
[D1703-M-BG, V2003-M-BG, V2003-M-T-BG, V2203-M-BG, V2403-M-BG]

1. Remove the piston rings (1), (2), (3) using a piston ring tool.
2. Remove the piston pin (9), and separate the connecting rod (7) from the piston (6).

(When reassembling)

- When installing the rings, assemble the rings so that the manufacturer's mark (12) near the gap faces the top of the piston (6).
- When installing the oil ring (3) onto the piston (6), place the expander joint (10) on the opposite side of the oil ring gap (11).
- Apply engine oil to the piston pin (9).
- When installing the connecting rod (7) to the piston (6), immerse the piston (6) in 80 °C (176 °F) oil for 10 to 15 minutes and insert the piston pin (9) to the piston (6).
- When installing the connecting rod (7) to the piston (6), align the mark (8) on the connecting rod (7) to the fan-shaped concave (5).

■ **NOTE**

- **Mark the same number on the connecting rod (7) and the piston (6) so as not to change the combination.**

(1) Top Ring
(2) Second Ring
(3) Oil Ring
(4) Piston Pin Snap Ring
(5) Fan-Shaped Concave
(6) Piston
(7) Connecting Rod
(8) Mark
(9) Piston Pin
(10) Expander Joint
(11) Oil Ring Gap
(12) Manufacturer's Mark

W1026376

https://truckmanualshub.com/

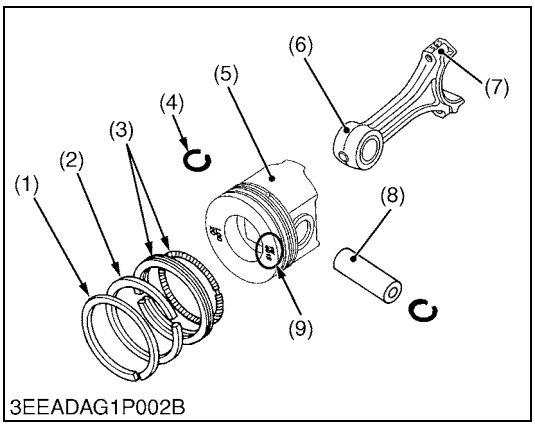

3EEADAG1P002B

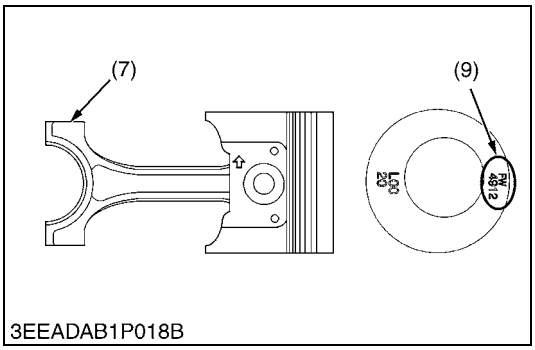

3EEADAB1P018B

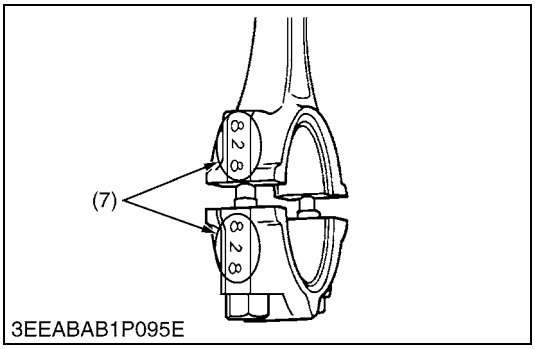

3EEABAB1P095E

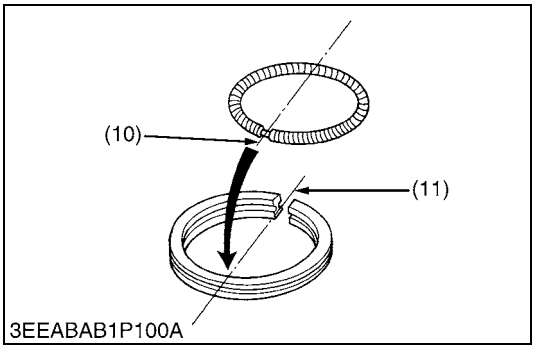

3EEABAB1P100A

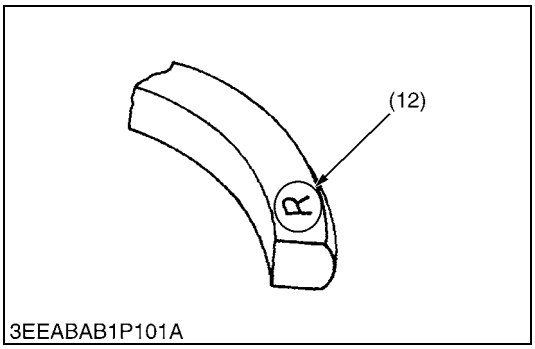

3EEABAB1P101A

Piston Ring and Connecting Rod

[D1803-M-DI, V2403-M-DI, V2403-M-DI-T]

1. Remove the piston rings (1), (2), (3) using a piston ring tool.
2. Remove the piston pin (8), and separate the connecting rod (6) from the piston (5).

(When reassembling)

- When installing the ring, assemble the rings so that the manufacturer's mark (12) near the gap faces the top of the piston (5).
- When installing the oil ring (3) onto the piston (5), place the expander joint (10) on the opposite side of the oil ring gap (11).
- Apply engine oil to the piston pin (8).
- When installing the connecting rod (6) to the piston (5), immerse the piston (5) in 80 °C (176 °F) oil for 10 to 15 minutes and insert the piston pin (8) to the piston (5).
- Assemble the piston (5) to the connecting rod (6) with the FW mark (9) facing the flywheel side and the connecting rod mark (7) facing the injection pump side.

■ **NOTE**

- **Mark the same number on the connecting rod (6) and the piston (5) so as not to change the combination.**

(1) Top Ring
(2) Second Ring
(3) Oil Ring
(4) Piston Pin Snap Ring
(5) Piston
(6) Connecting Rod
(7) Mark
(8) Piston Pin
(9) FW Mark
(10) Expander Joint
(11) Oil Ring Gap
(12) Manufacturer's Mark

W1127943

https://truckmanualshub.com/

(6) Flywheel and Crankshaft

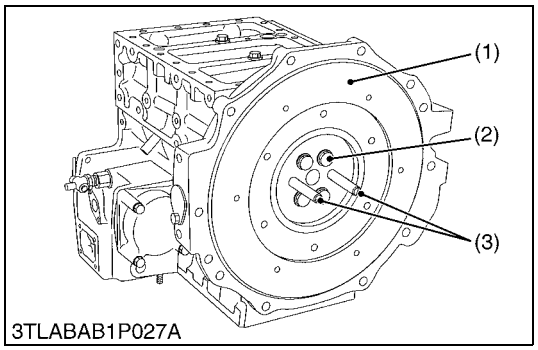

Flywheel

1. Fit the stopper to the flywheel (1).
2. At first, remove two pieces of the flywheel screws (2).
3. Insert two pieces of the flywheel guide screws (3) in the holes.
4. Remove the all flywheel screws (2).
5. Remove the flywheel (1) slowly along the flywheel guide screws (3).

(When reassembling)

- Insert two pieces of the flywheel guide screws (3).
- Check to see that there are no metal particles left on the flywheel mounting surfaces.
- Apply engine oil to the threads and the undercut surface of the flywheel bolt and fit the bolt.

Tightening torque	Flywheel screw	98.1 to 107 N·m 10.0 to 11.0 kgf·m 72.4 to 79.5 lbf·ft

(1) Flywheel
(2) Flywheel Screw
(3) Flywheel Guide Screws

W1026863

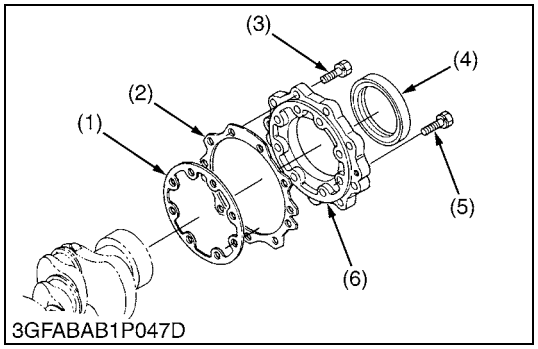

Bearing Case Cover

1. Remove the bearing case cover mounting screws. First, remove inside screws (5) and then outside screws (3).
2. Screw two removed screws into the screw hole of bearing case cover (6) to remove it.

■ **IMPORTANT**

- **The length of inside screws (5) and outside screws (3) are different. Do not take a mistake using inside screws and outside screws.**

(When reassembling)

- Fit the bearing case gasket (1) and the bearing case cover gasket (2) with correct directions.
- Install the bearing case cover (6) to position the casting mark **"UP"** on it upward.
- Apply engine oil to the oil seal lip and take care that it is not rolled when installing.
- Tighten the bearing case cover mounting screws with even force on the diagonal line.

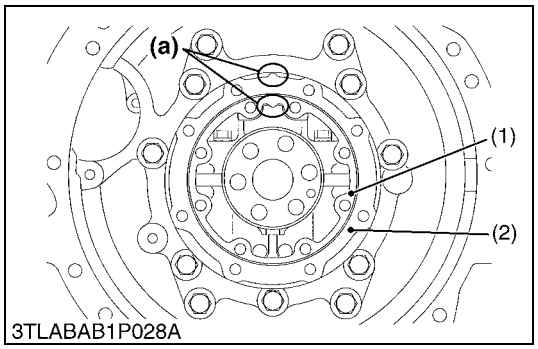

Tightening torque	Bearing case cover mounting screw	24 to 27 N·m 2.4 to 2.8 kgf·m 18 to 20 lbf·ft

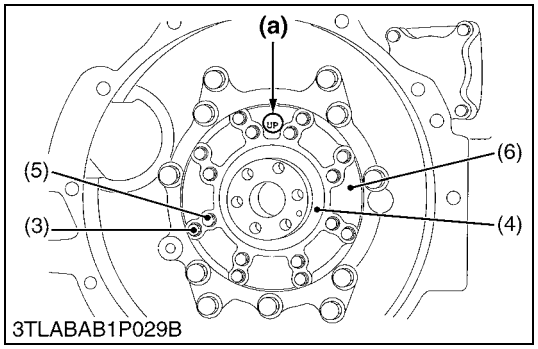

(1) Bearing Case Gasket
(2) Bearing Case Cover Gasket
(3) Bearing Case Cover Mounting Screw
(4) Oil Seal
(5) Bearing Case Cover Mounting Screw
(6) Bearing Case Cover
(a) Upside

W10292140

https://truckmanualshub.com/

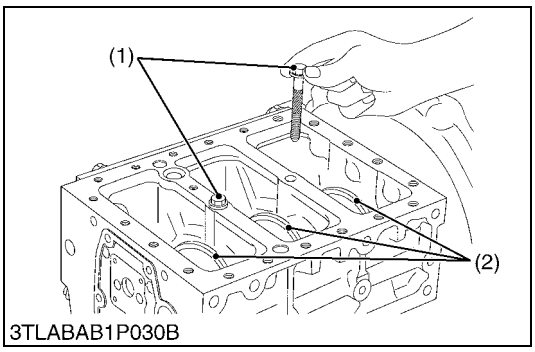

3TLABAB1P030B

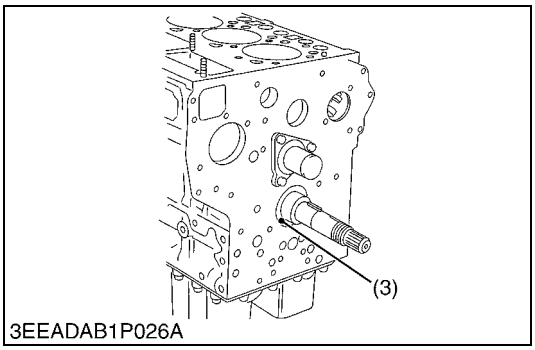

3EEADAB1P026A

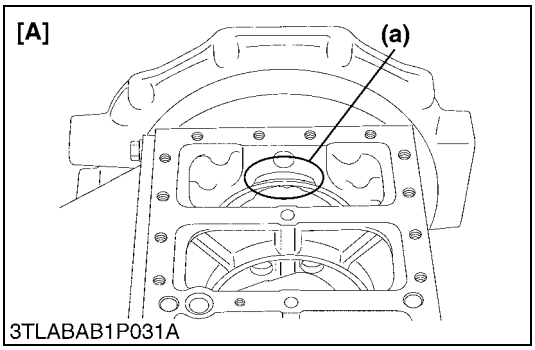

3TLABAB1P031A

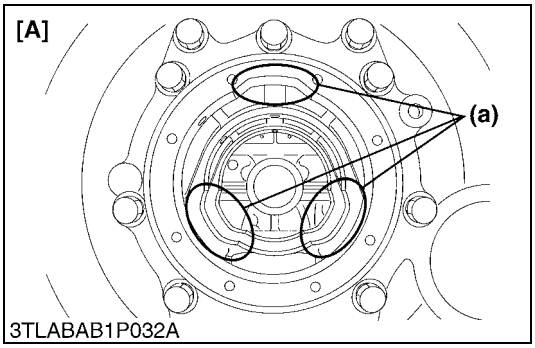

3TLABAB1P032A

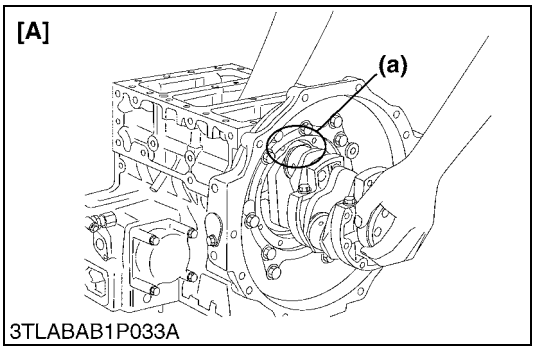

3TLABAB1P033A

Crankshaft

■ **NOTE**

- **Before disassembling, check the side clearance of crankshaft. Also check it during reassembling.**

For D1503-M, D1703-M, V2003-M, V2203-M, D1703-M-BG, V2003-M-BG, V2003-M-T-BG and V2203-M-BG

1. Remove the main bearing case screw 2 (1).
2. Pull out the crankshaft assembly, taking care not to damage the crankshaft bearing 1 (3).

For D1803-M and D1803-M-DI

1. Remove the main bearing case screw 2 (1).
2. Turn the crankshaft to set the crank pin of the third cylinder to the bottom dead center. Then draw out the crankshaft until the crank pin of the second cylinder comes to the center of the third cylinder.
3. Turn the crankshaft by 2.09 rad (120 °) counterclockwise to set the crank pin of the second cylinder to the bottom dead center. Draw out the crankshaft until the crank pin of the first cylinder comes to the center of the third cylinder
4. Repeat the above steps to draw out all the crankshaft.

For V2403-M, V2403-M-DI, V2403-M-T, V2403-M-DI-T and V2403-M-BG

1. Remove the main bearing case screw 2 (1).
2. Turn the crankshaft to set the crank pin of the 4th cylinder to the horizontal directions (Right or Left). Then draw out all the crankshaft, holding the crank pins to the horizontal directions (Right or Left).

(When reassembling)

■ **IMPORTANT**

- **Install the crankshaft sub assembly, aligning the screw hole of main bearing case 2 (2) with the screw hole of cylinder block.**
- **When tightening the main bearing case screw 2 (1), apply oil to the screw and screw by hand before tightening the specific torque.**
  If not smooth to screw by hand, align the screw holes between the cylinder block and the main bearing case.

Tightening torque	Main bearing case screw 2	69 to 73 N·m 7.0 to 7.5 kgf·m 51 to 54 lbf·ft

(1) Main Bearing Case Screw 2
(2) Main Bearing Case 2
(3) Crankshaft Bearing 1
(a) Cut place for removing and installing the crankshaft
[A] D1803-M, D1803-M-DI

W1066311

https://truckmanualshub.com/

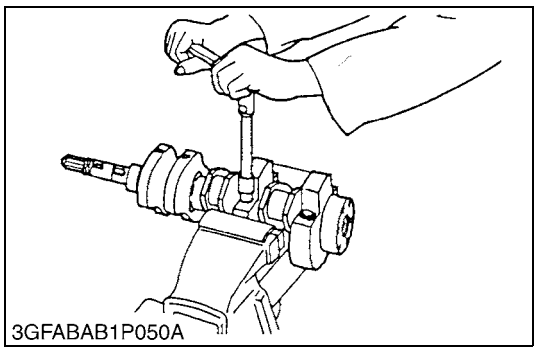
3GFABAB1P050A

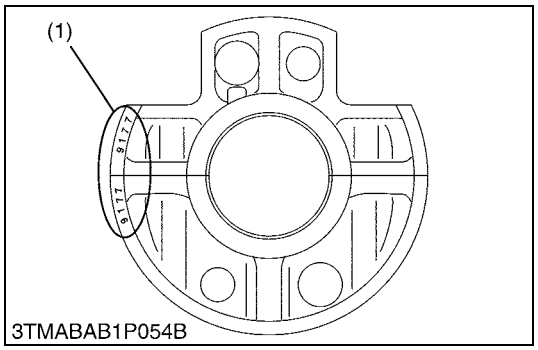

3TMABAB1P054B

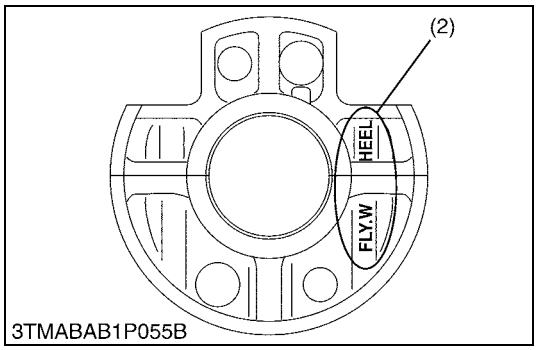

3TMABAB1P055B

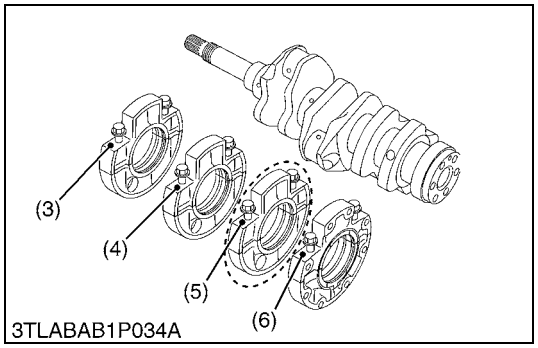

3TLABAB1P034A

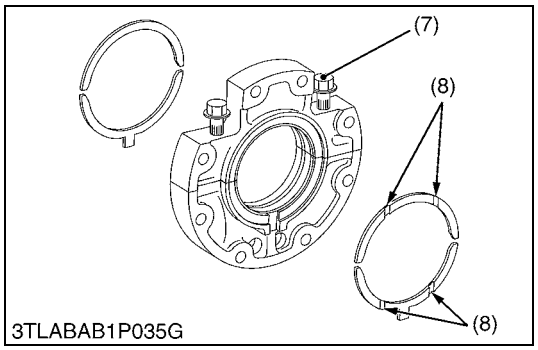

3TLABAB1P035G

Main Bearing Case Assembly

1. Remove the two main bearing case screws 1 (7), and remove the main bearing case assembly being careful with thrust bearing and crankshaft bearing.
2. Remove the main bearing case 1, 2 as above.

(When reassembling)

- Clean the oil passage in the main bearing case.
- Apply clean engine oil on the bearings.
- Install the main bearing case assemblies in the original positions. Since diameters of main bearing cases vary, install them in order of makings (A, B for 3 cylinders and A, B, C for 4 cylinders) from the gear case side.
- Match the alignment numbers (1) and mark (2) on the main bearing case.
- When installing the main bearing case 1 and 2, face the mark **"FLYWHEEL"** to the flywheel.
- Install the thrust bearing with its oil groove (8) facing outward.
- Confirm that the main bearing case moves smoothly after tightening the main bearing case screw 1 (7) to the specified torque.

Tightening torque	Main bearing case screw 1	46 to 50 N·m 4.7 to 5.2 kgf·m 34 to 37 lbf·ft

(1) Alignment Number
(2) Alignment Mark
(3) A
(4) B
(5) C
(6) No Mark
(7) Main Bearing Case Screw 1
(8) Oil Groove

W1027366

https://truckmanualshub.com/

(7) Starter

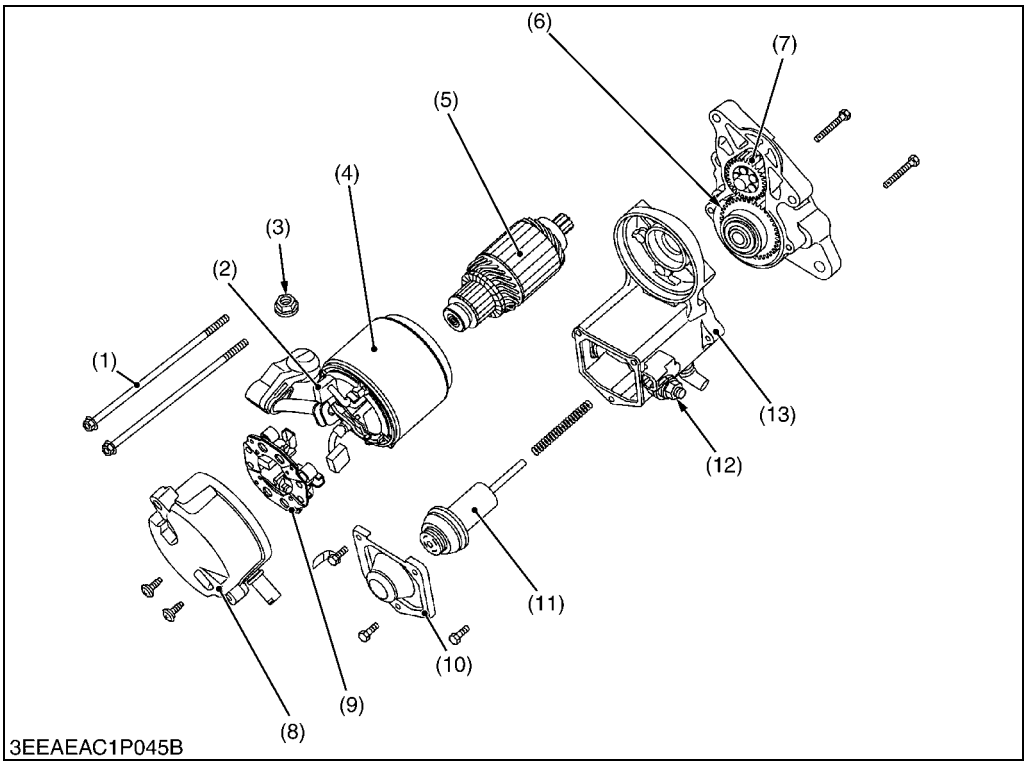

(1) Through Bolt
(2) Brush
(3) **C** Terminal Nut
(4) Yoke
(5) Armature
(6) Overrunning Clutch
(7) Idle Gear
(8) End Frame
(9) Brush Holder
(10) Magnet Switch Cover
(11) Plunger
(12) **B** Terminal Nut
(13) Housing

W1222714

1. Unscrew the **C** terminal nut (3), and disconnect the connecting lead.
2. Remove the two through bolts (1).
3. Detach the motor.
4. Remove the end frame (8).
5. Remove the brush from the brush holder while holding the spring up.
6. Remove the brush holder (9).
7. Draw out the armature (5) from the yoke (4).
8. Remove the housing (13).
9. Remove the idle gear (7) and the overrunning clutch (6).
10. Remove the magnet switch cover (10).
11. Remove the plunger (11).

■ **NOTE**

- **Do not damage to the brush and commutator.**

(When reassembling)

- Apply grease (DENSO No. 50 or equivalent) to the idle gear and overrunning clutch portions.

Tightening torque	**B** terminal nut	5.9 to 11 N·m 0.60 to 1.2 kgf·m 4.4 to 8.6 lbf·ft

W1131675

https://truckmanualshub.com/

(8) Alternator

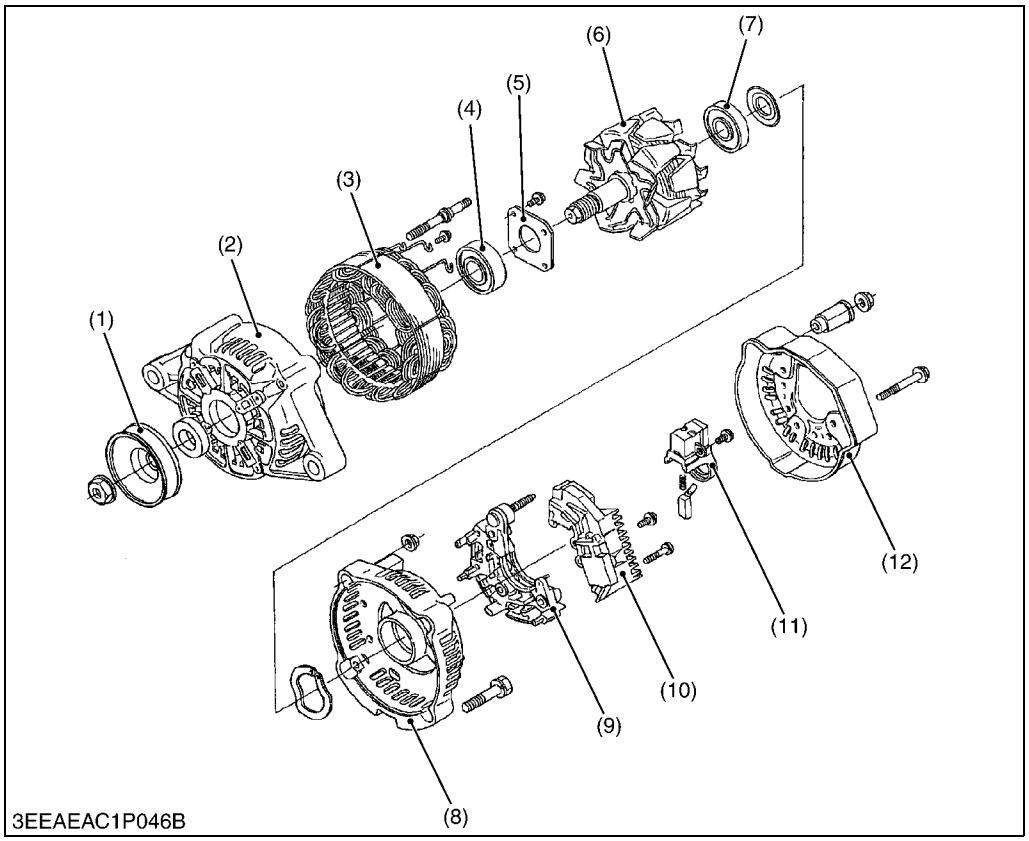

(1) Pulley
(2) Drive End Frame
(3) Stator
(4) Bearing
(5) Retainer Plate
(6) Rotor
(7) Bearing
(8) Rear End Frame
(9) Rectifier
(10) IC Regulator
(11) Brush Holder
(12) Rear End Cover

W1224079

1. Remove the pulley (1).
2. Remove the rear end cover (12).
3. Remove the brush holder (11).
4. Remove the IC regulator (10).
5. Remove the four screws holding the stator lead wires.
6. Remove the rectifier (9).
7. Remove the rear end frame (8).
8. Press out the rotor (6) from drive end frame (2).
9. Remove the retainer plate (5).
10. Press out the bearing (4) from drive end frame (2) with a press and jig.
11. Lightly secure the rotor with a vise to prevent damage, and remove the bearing (7) with a puller.

(When reassembling)

Tightening torque	Pulley nut	58.4 to 78.9 N·m 5.95 to 8.05 kgf·m 43.1 to 58.2 lbf·ft

W1224556

https://truckmanualshub.com/

[3] SERVICING

(1) Cylinder Head and Valves

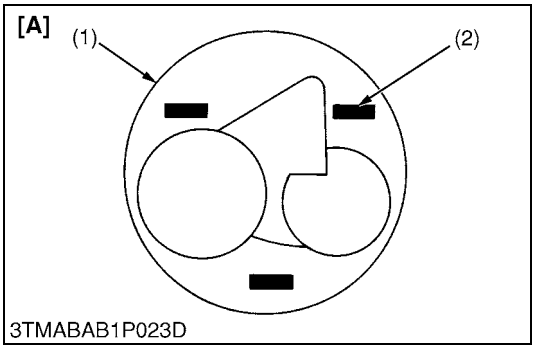

3TMABAB1P023D

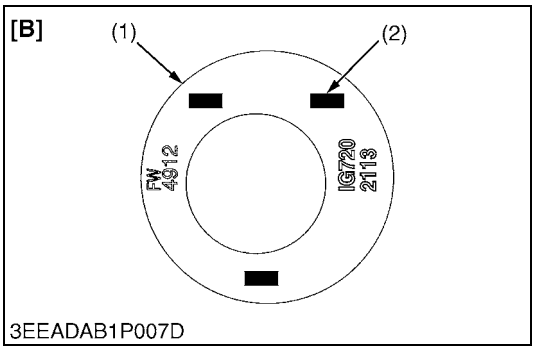

3EEADAB1P007D

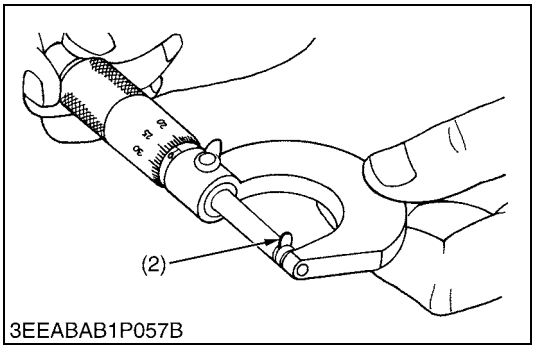

3EEABAB1P057B

Top Clearance

1. Remove the cylinder head.
2. Move the piston up and stick a strip of fuse on the piston head at three position with grease.
3. Lower the piston and install the cylinder head. (Use a new cylinder head gasket and tighten with a specified tightening torque.)
4. Turn the flywheel until the piston exceeds top dead center.
5. Remove the cylinder head and measure the thickness of the fuses.
6. If the measurement is not within the factory specifications, check the oil clearances between the crankpin and bearing and between the piston pin and bushing.

■ **NOTE**

- **After checking the top clearance, be sure to assemble the cylinder head with a new cylinder head gasket.**

Top clearance	Factory spec.	D1503-M D1703-M D1803-M V2003-M V2203-M V2403-M V2403-M-T D1703-M-BG V2003-M-BG V2003-M-T-BG V2203-M-BG V2403-M-BG	0.575 to 0.675 mm 0.0227 to 0.0265 in.
		D1803-M-DI V2403-M-DI V2403-M-DI-T	0.60 to 0.70 mm 0.024 to 0.027 in.

Tightening torque	Cylinder head screws	93.2 to 98.0 N·m 9.50 to 10.0 kgf·m 68.8 to 72.3 lbf·ft

(1) Piston
(2) Fuse

[A] D1503-M, D1703-M, D1803-M V2003-M, V2203-M, V2403-M V2403-M-T D1703-M-BG, V2003-M-BG V2003-M-T-BG, V2203-M-BG V2403-M-BG
[B] D1803-M-DI, V2403-M-DI V2403-M-DI-T

W1020190

https://truckmanualshub.com/

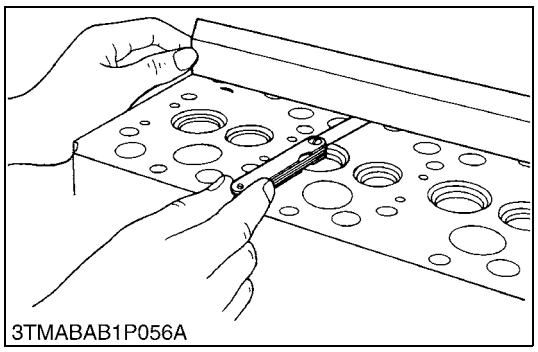
3TMABAB1P056A

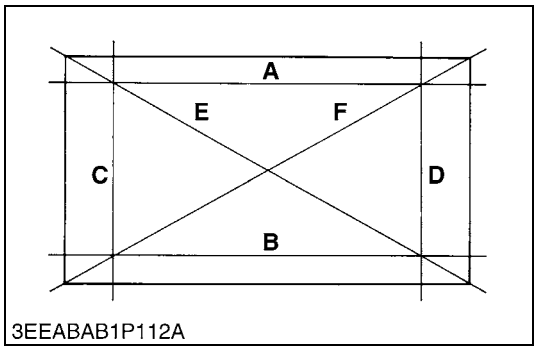

3EEABAB1P112A

Cylinder Head Surface Flatness

1. Clean the cylinder head surface.
2. Place a straightedge on the cylinder head's four sides (**A**), (**B**), (**C**) and (**D**) and two diagonal (**E**) and (**F**) as shown in the figure.
3. Measure the clearance with a feeler gauge.
4. If the measurement exceeds the allowable limit, correct it with a surface grinder.

■ **IMPORTANT**
- **Do not place the straightedge on the combustion chamber.**
- **Be sure to check the valve recessing after correcting.**

Cylinder head surface flatness	Allowable limit	0.05 mm 0.002 in.

W1027737

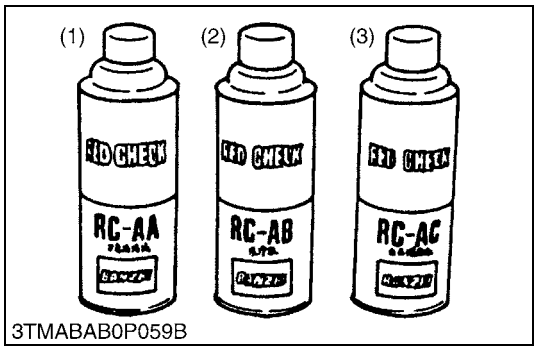

3TMABAB0P059B

Cylinder Head Flaw

1. Prepare an air spray red check.
2. Clean the surface of the cylinder head with the detergent (2).
3. Spray the cylinder head surface with the red permeative liquid (1). Leave it five to ten minutes after spraying.
4. Wash away the red permeative liquid on the cylinder head surface with the detergent (2).
5. Spray the cylinder head surface with the white developer (3).
6. If flawed, it can be identified as red marks.

(1) Red Permeative Liquid
(2) Detergent
(3) White Developer

W1076542

https://truckmanualshub.com/

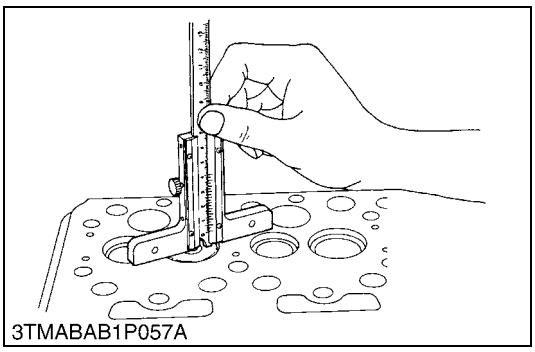
3TMABAB1P057A

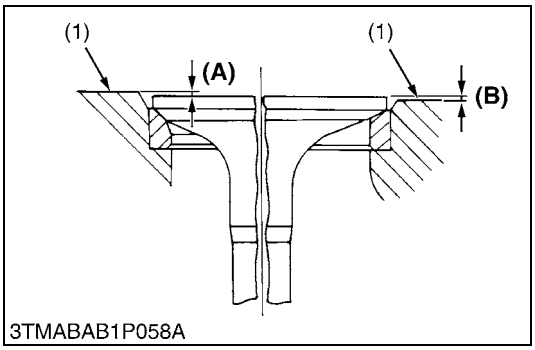

3TMABAB1P058A

Valve Recessing

1. Clean the cylinder head surface, valve face and valve seat.
2. Insert the valve into the valve guide.
3. Measure the valve recessing with a depth gauge.
4. If the measurement exceeds the allowable limit, replace the valve.
5. If it still exceeds the allowable limit after replacing the valve, replace the cylinder head.

Valve recessing	Factory spec.	D1503-M D1703-M D1803-M V2003-M V2203-M V2403-M V2403-M-T D1703-M-BG V2003-M-BG V2003-M-T-BG V2203-M-BG V2403-M-BG	0.05 (protrusion) to 0.15 (recessing) mm 0.002 (protrusion) to 0.0059 (recessing) in.
		D1803-M-DI V2403-M-DI V2403-M-DI-T	0.65 to 0.85 mm 0.026 to 0.033 in.
	Allowable limit	D1503-M D1703-M D1803-M V2003-M V2203-M V2403-M V2403-M-T D1703-M-BG V2003-M-BG V2003-M-T-BG V2203-M-BG V2403-M-BG	0.40 (recessing) mm 0.016 (recessing) in.
		D1803-M-DI V2403-M-DI V2403-M-DI-T	–

(1) Cylinder Head Surface

(A) Recessing
(B) Protrusion

W10768800

https://truckmanualshub.com/

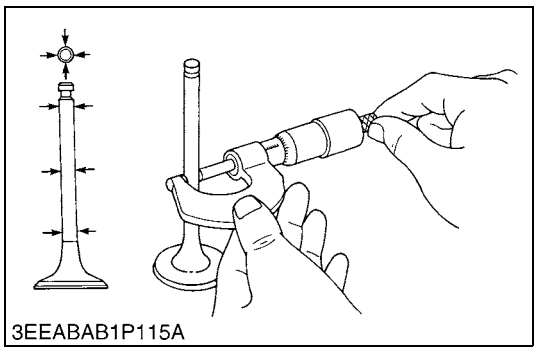
3EEABAB1P115A

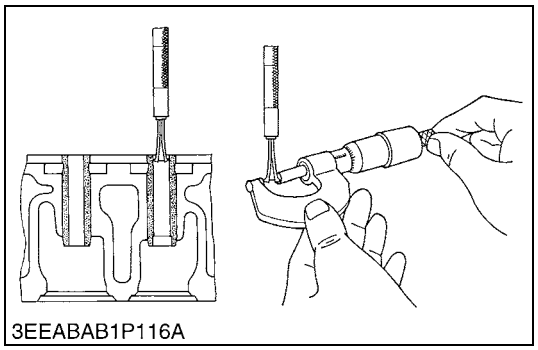
3EEABAB1P116A

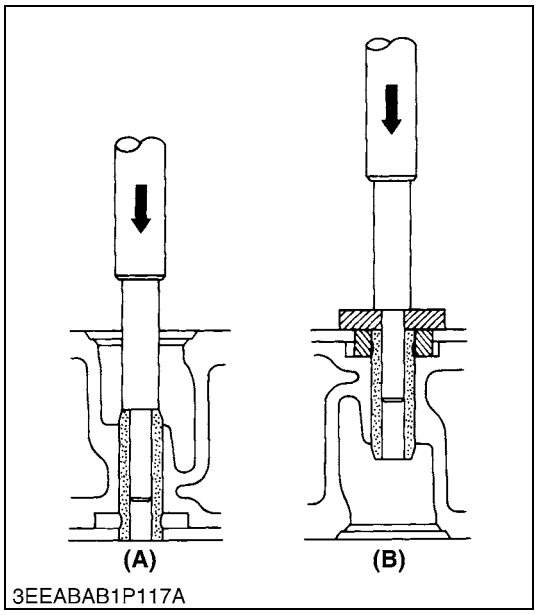

3EEABAB1P117A

Clearance between Valve Stem and Valve Guide

1. Remove carbon from the valve guide section.
2. Measure the valve stem O.D. with an outside micrometer.
3. Measure the valve guide I.D. with a small hole gauge, and calculate the clearance.
4. If the clearance exceeds the allowable limit, replace the valves. If it still exceeds the allowable limit, replace the valve guide.

Clearance between valve stem and valve guide	Factory spec.	0.040 to 0.070 mm 0.0016 to 0.0027 in.
	Allowable limit	0.10 mm 0.0039 in.

Valve stem O.D.	Factory spec.	7.960 to 7.975 mm 0.3134 to 0.3139 in.
Valve guide I.D.	Factory spec.	8.015 to 8.030 mm 0.3156 to 0.3161 in.

W10774950

Replacing Valve Guide

(When removing)

1. Press out the used valve guide using a valve guide replacing tool. (See page **"SPECIAL TOOLS"**.)

(When installing)

1. Clean a new valve guide and valve guide bore, and apply engine oil to them.
2. Press in a new valve guide using a valve guide replacing tool.
3. Ream precisely the I.D. of the valve guide to the specified dimension.

Valve guide I.D. (Intake and exhaust)	Factory spec.	8.015 to 8.030 mm 0.3156 to 0.3161 in.

■ **IMPORTANT**

- **Do not hit the valve guide with a hammer during replacement.**

(A) When Removing **(B) When Installing**

W10278890

https://truckmanualshub.com/

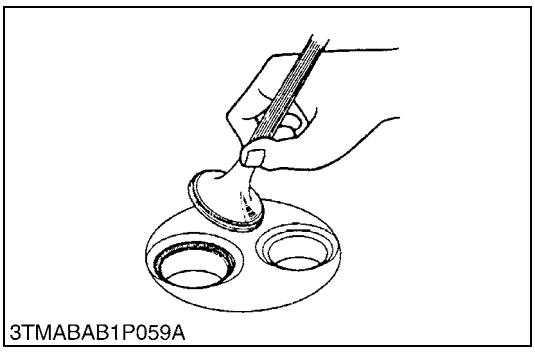
3TMABAB1P059A

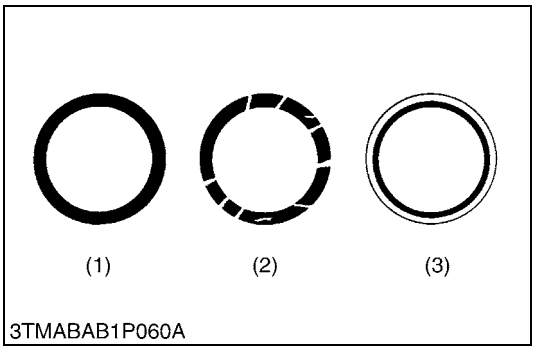

3TMABAB1P060A

Valve Seating

1. Coat the valve face lightly with prussian blue and put the valve on its seat to check the contact.
2. If the valve does not seat all the way around the valve seat or the valve contact is less than 70 %, correct the valve seating as follows.
3. If the valve contact does not comply with the reference value, replace the valve or correct the contact of valve seating.

Valve seat width	Factory spec.	2.12 mm 0.0835 in.

(1) Correct
(2) Incorrect
(3) Incorrect

W10282190

https://truckmanualshub.com/

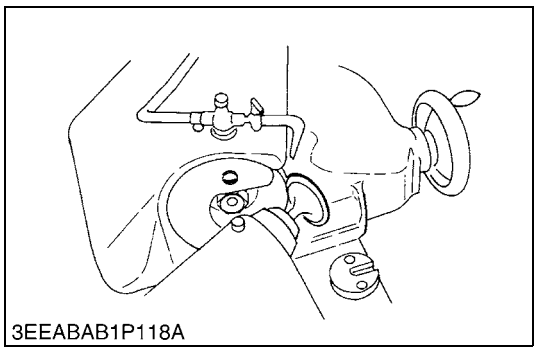
3EEABAB1P118A

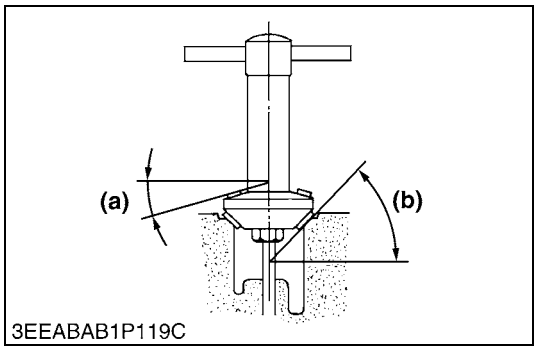

3EEABAB1P119C

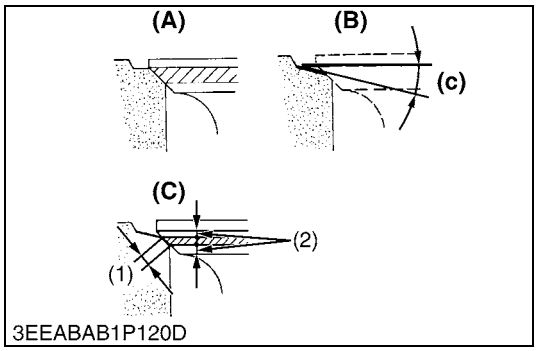

3EEABAB1P120D

Correcting Valve and Valve Seat

■ **NOTE**

- **Before correcting the valve and seat, check the valve stem and the I.D. of valve guide section, and repair them if necessary.**
- **After correcting the valve seat, be sure to check the valve recessing.**

1) Correcting Valve

1. Correct the valve with a valve refacer.

[D1503-M, D1703-M, D1803-M, V2003-M, V2203-M, V2403-M, V2403-M-T]
[D1703-M-BG, V2003-M-BG, V2003-M-T-BG, V2203-M-BG, V2403-M-BG]

Valve face angle	Factory spec.	IN.	1.0 rad 60 °
		EX.	0.79 rad 45 °

[D1803-M-DI, V2403-M-DI, V2403-M-DI-T]

Valve face angle	Factory spec.	IN.	0.79 rad 45 °
		EX.	0.79 rad 45 °

2) Correcting Valve Seat

1. Slightly correct the seat surface with a 1.0 rad (60 °) or 0.79 rad (45 °) valve seat cutter.
2. Resurface the seat surface with a 0.52 rad (30 °) valve seat cutter or 0.26 rad (15 °) valve seat cutter to valve seat so that the width is close to specified valve seat width (2.12 mm, 0.0835 in.).
3. After resurfacing the seat, inspect for even valve seating, apply a thin film of compound between the valve face and valve seat, and fit them with valve lapping tool.
4. Check the valve seating with prussian blue. The valve seating surface should show good contact all the way around.

[D1503-M, D1703-M, D1803-M, V2003-M, V2203-M, V2403-M, V2403-M-T]
[D1703-M-BG, V2003-M-BG, V2003-M-T-BG, V2203-M-BG, V2403-M-BG]

Valve seat angle	Factory spec.	IN.	1.0 rad 60 °
		EX.	0.79 rad 45 °

[D1803-M-DI, V2403-M-DI, V2403-M-DI-T]

Valve seat angle	Factory spec.	IN.	0.79 rad 45 °
		EX.	0.79 rad 45 °

(1) Valve Seat Width
(2) Identical Dimensions

(A) Check Contact
(B) Correct Seat Width
(C) Check Contact
(a) 0.26 rad (15 °) or 0.52 rad (30 °)
(b) 0.79 rad (45 °) or 1.0 rad (60 °)
(c) 0.52 rad (30 °) or 0.26 rad (15 °)

W10283500

https://truckmanualshub.com/

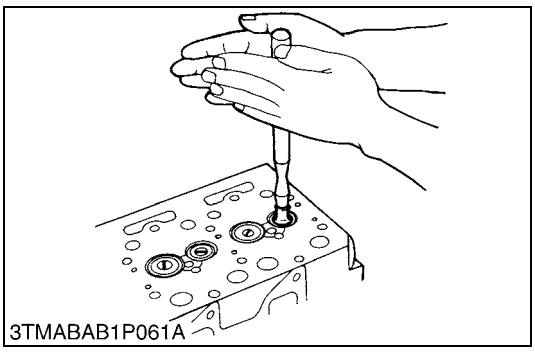
3TMABAB1P061A

Valve Lapping

1. Apply compound evenly to the valve lapping surface.
2. Insert the valve into the valve guide. Lap the valve onto its seat with a valve flapper or screwdriver.
3. After lapping the valve, wash the compound away and apply oil, then repeat valve lapping with oil.
4. Apply prussian blue to the contact surface to check the seated rate. If it is less than 70 %, repeat valve lapping again.

■ **IMPORTANT**

- **When valve lapping is performed, be sure to check the valve recessing and adjust the valve clearance after assembling the valve.**

W10288140

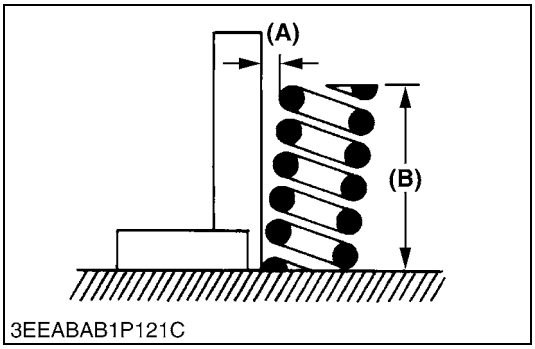

3EEABAB1P121C

Free Length and Tilt of Valve Spring

1. Measure the free length **(B)** of valve spring with vernier calipers. If the measurement is less than the allowable limit, replace it.
2. Put the valve spring on a surface plate, place a square on the side of the valve spring.
3. Check to see if the entire side is in contact with the square. Rotate the valve spring and measure the maximum tilt **(A)**. If the measurement exceeds the allowable limit, replace it.
4. Check the entire surface of the valve spring for scratches. If there is any defect, replace it.

Tilt **(A)**	Allowable limit	1.0 mm 0.039 in.

Free length **(B)**	Factory spec.	41.7 to 42.2 mm 1.65 to 1.66 in.
	Allowable limit	41.2 mm 1.62 in.

(A) Tilt **(B) Free Length**

W10289350

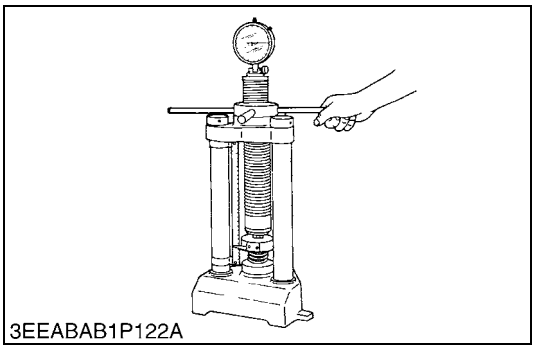
3EEABAB1P122A

Valve Spring Setting Load

1. Place the valve spring on a tester and compress it to the same length it is actually compressed in the engine.
2. Read the compression load on the gauge.
3. If the measurement is less than the allowable limit, replace it.

Setting load / Setting length	Factory spec.	118 N / 35.0 mm 12.0 kgf / 35.0 mm 26.5 lbf / 1.38 in.
	Allowable limit	100 N / 35.0 mm 10.2 kgf / 35.0 mm 22.5 lbf / 1.38 in.

W10784360

https://truckmanualshub.com/

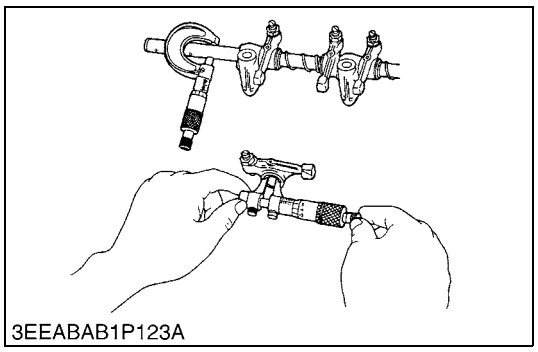
3EEABAB1P123A

Oil Clearance between Rocker Arm and Rocker Arm Shaft

1. Measure the rocker arm shaft O.D. with an outside micrometer.
2. Measure the rocker arm I.D. with an inside micrometer, and then calculate the oil clearance.
3. If the oil clearance exceeds the allowable limit, replace the rocker arm and measure the oil clearance again. If it still exceeds the allowable limit, replace also the rocker arm shaft.

Oil clearance between rocker arm and rocker arm shaft	Factory spec.	0.016 to 0.045 mm 0.00063 to 0.0017 in.
	Allowable limit	0.10 mm 0.0039 in.

Rocker arm shaft O.D.	Factory spec.	13.973 to 13.984 mm 0.55012 to 0.55055 in.
Rocker arm I.D.	Factory spec.	14.000 to 14.018 mm 0.55119 to 0.55188 in.

W1029150

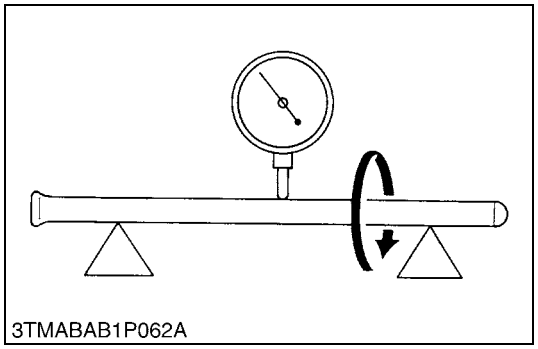
3TMABAB1P062A

Push Rod Alignment

1. Place the push rod on V blocks.
2. Measure the push rod alignment.
3. If the measurement exceeds the allowable limit, replace the push rod.

Push rod alignment	Allowable limit	0.25 mm 0.0098 in.

W10292900

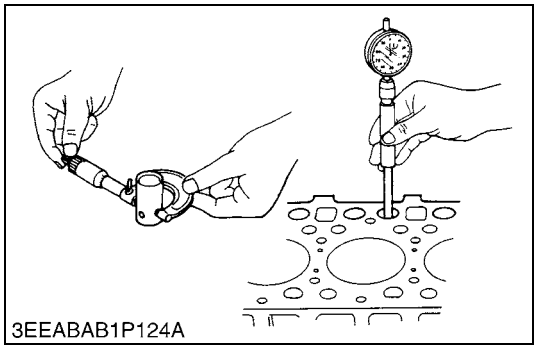
3EEABAB1P124A

Oil Clearance between Tappet and Tappet Guide Bore

1. Measure the tappet O.D. with an outside micrometer.
2. Measure the I.D. of the tappet guide bore with a cylinder gauge, and calculate the oil clearance.
3. If the oil clearance exceeds the allowable limit or the tappet is damaged, replace the tappet.

Oil Clearance between tappet and tappet guide bore	Factory spec.	0.020 to 0.062 mm 0.00079 to 0.0024 in.
	Allowable limit	0.07 mm 0.003 in.

Tappet O.D.	Factory spec.	23.959 to 23.980 mm 0.94327 to 0.94409 in.
Tappet guide bore I.D.	Factory spec.	24.000 to 24.021 mm 0.94489 to 0.94570 in.

W1029366

https://truckmanualshub.com/

(2) Timing Gears

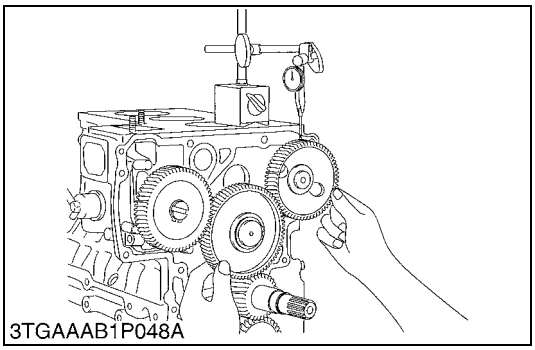
3TGAAAB1P048A

Timing Gear Backlash

1. Set a dial indicator (lever type) with its tip on the gear tooth.
2. Move the gear to measure the backlash, holding its mating gear.
3. If the backlash exceeds the allowable limit, check the oil clearance of the shafts and the gear.
4. If the oil clearance is proper, replace the gear.

Backlash between idle gear and crank gear	Factory spec.	0.04150 to 0.1122 mm 0.001634 to 0.004417 in.
	Allowable limit	0.15 mm 0.0059 in.

Backlash between idle gear and cam gear	Factory spec.	0.04150 to 0.1154 mm 0.001634 to 0.004543 in.
	Allowable limit	0.15 mm 0.0059 in.

Backlash between idle gear and injection pump gear	Factory spec.	0.04150 to 0.1154 mm 0.001634 to 0.004543 in.
	Allowable limit	0.15 mm 0.0059 in.

Backlash between crank gear and oil pump gear	Factory spec.	0.04150 to 0.1090 mm 0.001634 to 0.004291 in.
	Allowable limit	0.15 mm 0.0059 in.

For Balancer Model Only

Backlash between idle gear and balancer gear (Intake side)	Factory spec.	0.03500 to 0.1160 mm 0.001378 to 0.004566 in.
	Allowable limit	0.15 mm 0.0059 in.

Backlash between cam gear and balancer gear (Exhaust side)	Factory spec.	0.03500 to 0.1160 mm 0.001378 to 0.004566 in.
	Allowable limit	0.15 mm 0.0059 in.

For Side PTO Model Only

Backlash between crank gear and idle gear 2	Factory spec.	0.04150 to 0.1154 mm 0.001634 to 0.004543 in.
	Allowable limit	0.15 mm 0.0059 in.

Backlash between idle gear 2 and hydraulic pump drive gear	Factory spec.	0.03080 to 0.1062 mm 0.001213 to 0.004181 in.
	Allowable limit	0.15 mm 0.0059 in.

W1029564

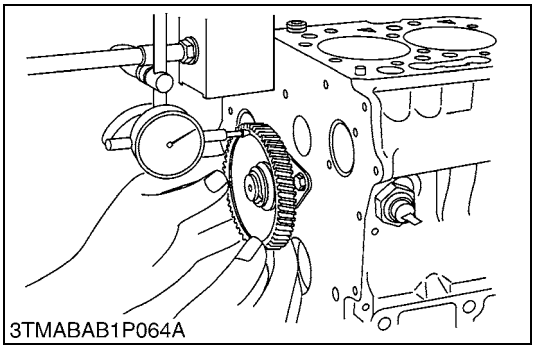
3TMABAB1P064A

Idle Gear Side Clearance

1. Set a dial indicator with its tip on the idle gear.
2. Measure the side clearance by moving the idle gear to the front and rear.
3. If the measurement exceeds the allowable limit, replace the idle gear collar.

Idle gear side clearance	Factory spec.	0.12 to 0.48 mm 0.0048 to 0.018 in.
	Allowable limit	0.9 mm 0.04 in.

W1029843

https://truckmanualshub.com/

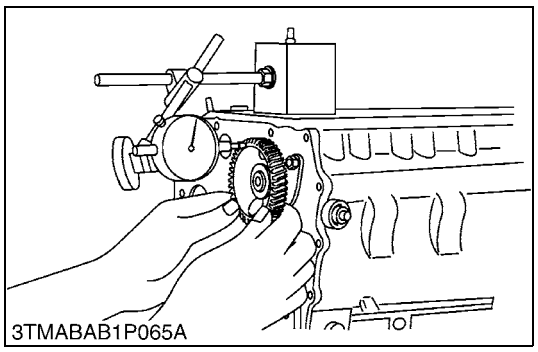
3TMABAB1P065A

Camshaft Side Clearance

1. Set a dial indicator with its tip on the camshaft.
2. Measure the side clearance by moving the cam gear to the front to rear.
3. If the measurement exceeds the allowable limit, replace the camshaft stopper.

Camshaft side clearance	Factory spec.	0.070 to 0.22 mm 0.0028 to 0.0086 in.
	Allowable limit	0.30 mm 0.012 in.

W1030012

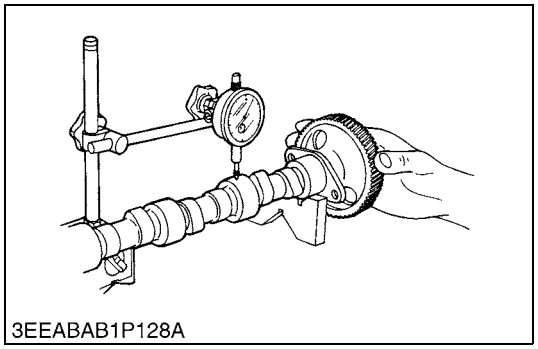
3EEABAB1P128A

Camshaft Alignment

1. Support the camshaft with V blocks on the surface plate at both end journals.
2. Set a dial indicator with its tip on the intermediate journal.
3. Measure the camshaft alignment.
4. If the measurement exceeds the allowable limit, replace the camshaft.

Camshaft alignment	Allowable limit	0.01 mm 0.0004 in.

W1031413

https://truckmanualshub.com/

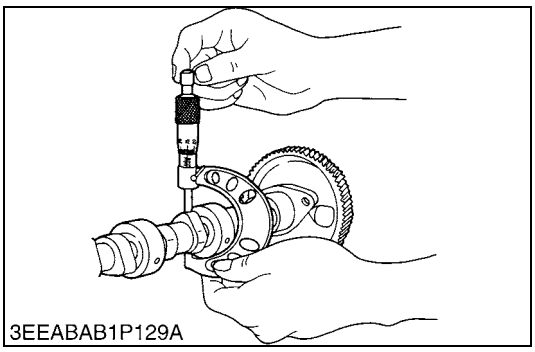

Cam Height

1. Measure the height of the cam at its highest point with an outside micrometer.
2. If the measurement is less than the allowable limit, replace the camshaft.

Cam height of intake	Factory spec.	D1503-M D1703-M-BG	33.27 mm 1.310 in.
		V2003-M V2403-M-DI-T V2003-M-BG V2203-M-BG	33.47 mm 1.318 in.
		D1703-M D1803-M V2203-M V2403-M V2403-M-T D1803-M-DI V2403-M-DI V2003-M-T-BG V2403-M-BG	33.90 mm 1.335 in.
	Allowable limit	D1503-M D1703-M-BG	33.22 mm 1.308 in.
		V2003-M V2403-M-DI-T V2003-M-BG V2203-M-BG	33.42 mm 1.316 in.
		D1703-M D1803-M V2203-M V2403-M V2403-M-T D1803-M-DI V2403-M-DI V2003-M-T-BG V2403-M-BG	33.85 mm 1.333 in.

W1031532

https://truckmanualshub.com/

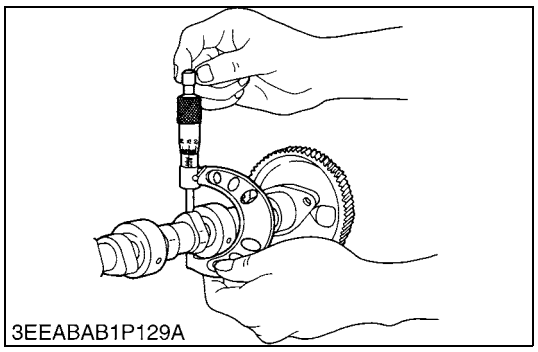
3EEABAB1P129A

Cam Height (Continued)

1. Measure the height of the cam at its highest point with an outside micrometer.
2. If the measurement is less than the allowable limit, replace the camshaft.

Cam height of exhaust	Factory spec.	V2403-M-DI-T	33.00 mm 1.299 in.
		V2403-M-T D1703-M-BG V2003-M-BG V2203-M-BG	33.27 mm 1.310 in.
		D1503-M V2003-M V2003-M-T-BG	33.47 mm 1.318 in.
		D1703-M D1803-M V2203-M V2403-M D1803-M-DI V2403-M-DI V2403-M-BG	33.90 mm 1.335 in.
	Allowable limit	V2403-M-DI-T	32.95 mm 1.297 in.
		V2403-M-T D1703-M-BG V2003-M-BG V2203-M-BG	33.22 mm 1.308 in.
		D1503-M V2003-M V2003-M-T-BG	33.42 mm 1.316 in.
		D1703-M D1803-M V2203-M V2403-M D1803-M-DI V2403-M-DI V2403-M-BG	33.85 mm 1.333 in.

W1111109

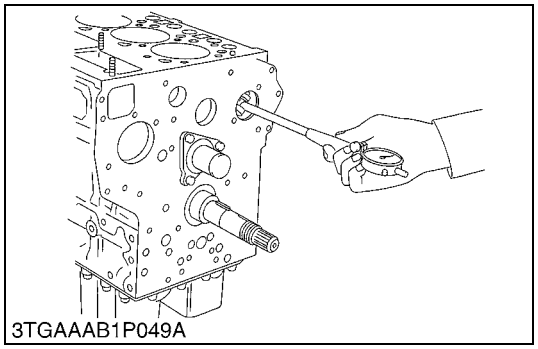
3TGAAAB1P049A

Oil Clearance of Camshaft Journal

1. Measure the camshaft journal O.D. with an outside micrometer.
2. Measure the cylinder block bore I.D. for camshaft with a cylinder gauge, and calculate the oil clearance.
3. If the oil clearance exceeds the allowable limit, replace the camshaft.

Oil clearance of camshaft journal	Factory spec.	0.050 to 0.091 mm 0.0020 to 0.0035 in.
	Allowable limit	0.15 mm 0.0059 in.

Camshaft journal O.D.	Factory spec.	39.934 to 39.950 mm 1.5722 to 1.5728 in.
Cylinder block bore I.D.	Factory spec.	40.000 to 40.025 mm 1.5748 to 1.5757 in.

W1031662

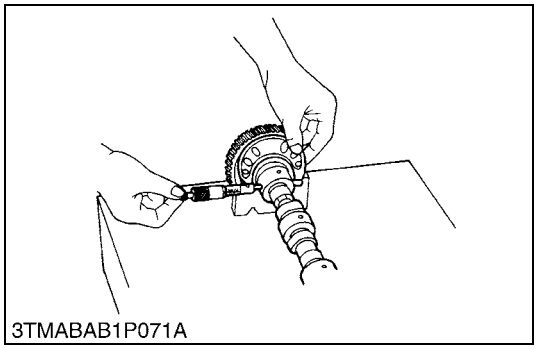
3TMABAB1P071A

https://truckmanualshub.com/

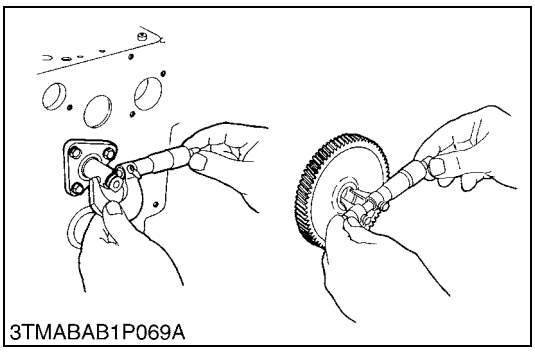
3TMABAB1P069A

Oil Clearance between Idle Gear Shaft and Idle Gear Bushing

1. Measure the idle gear shaft O.D. with an outside micrometer.
2. Measure the idle gear bushing I.D. with an inside micrometer, and calculate the oil clearance.
3. If the oil clearance exceeds the allowable limit, replace the bushing.
   If it still exceeds the allowable limit, replace the idle gear shaft.

Oil clearance between idle gear shaft and idle gear bushing	Factory spec.	0.025 to 0.066 mm 0.00099 to 0.0025 in.
	Allowable limit	0.10 mm 0.0039 in.

Idle gear shaft O.D.	Factory spec.	37.959 to 37.975 mm 1.4945 to 1.4950 in.
Idle gear bushing I.D.	Factory spec.	38.000 to 38.025 mm 1.4961 to 1.4970 in.

W1030933

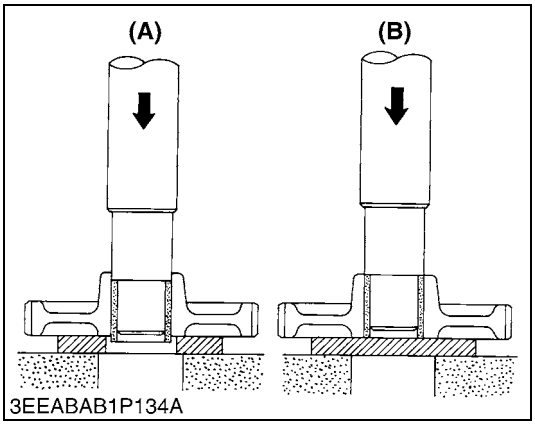

3EEABAB1P134A

Replacing Idle Gear Bushing

(When removing)

1. Press out the used idle gear bushing using an idle gear bushing replacing tool. (See page **"SPECIAL TOOLS"**.)

(When installing)

1. Clean a new idle gear bushing and idle gear bore, and apply engine oil to them.
2. Press in a new bushing using an idle gear bushing replacing tool, until it is flush with the end of the idle gear.

(A) When Removing **(B) When Installing**

W1031083

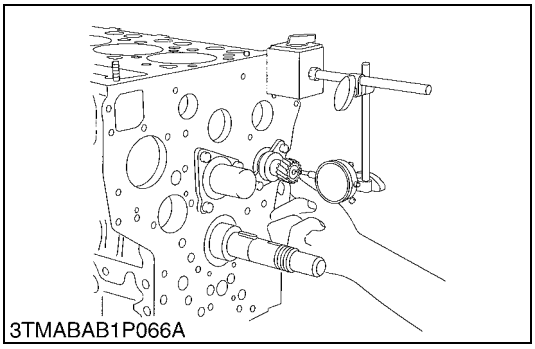
3TMABAB1P066A

Balancer Shaft Side Clearance (for Balancer Model Only)

1. Set a dial indicator with tip on the balancer shaft.
2. Measure the side clearance by moving the balancer shaft to the front and rear.
3. If the measurement exceeds the allowable limit, replace the balancer shaft.

Balancer shaft side clearance	Factory spec.	0.070 to 0.22 mm 0.0028 to 0.0086 in.
	Allowable limit	0.30 mm 0.012 in.

W1030111

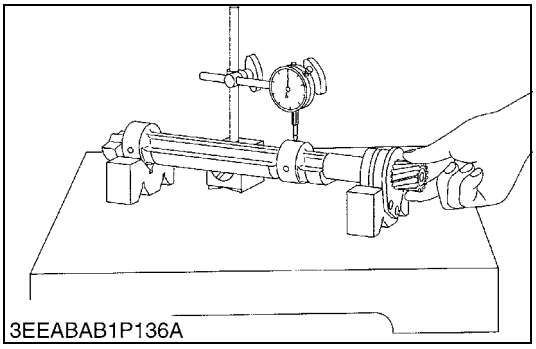
3EEABAB1P136A

Balancer Shaft Alignment (for Balancer Model Only)

1. Support the balancer shaft with V blocks on the surface plate and set a dial indicator with its tip on the intermediate journal at high angle.
2. Rotate the balancer shaft on the V block and get the misalignment (half of the measurement).
3. If the misalignment exceeds the allowable limit, replace the balancer shaft.

Balancer shaft alignment	Allowable limit	0.02 mm 0.0008 in.

W1042630

https://truckmanualshub.com/

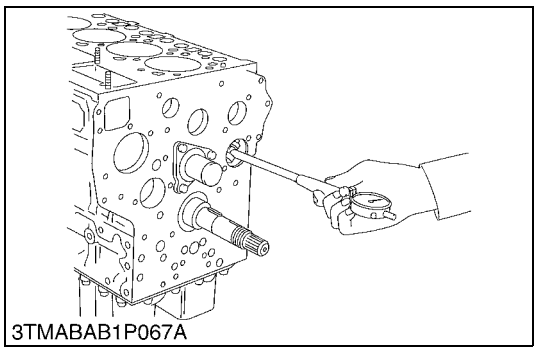
3TMABAB1P067A

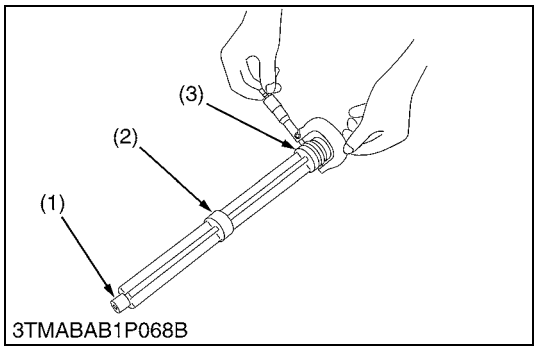

3TMABAB1P068B

Oil Clearance of Balancer Shaft Journal (for Balancer Model Only)

1. Measure the balancer shaft journal O.D. with an outside micrometer.
2. Measure the cylinder block bore I.D. for balancer shaft with an inside micrometer or cylinder gauge.
3. If the clearance exceeds the allowable limit, replace the balancer shaft.

Oil clearance of balancer shaft journal 1	Factory spec.	0.0300 to 0.111 mm 0.00119 to 0.00437 in.
	Allowable limit	0.20 mm 0.0079 in.

Balancer shaft journal 1 O.D.	Factory spec.	43.934 to 43.950 mm 1.7297 to 1.7303 in.
Balancer shaft bearing 1 I.D.	Factory spec.	43.980 to 44.045 mm 1.7315 to 1.7340 in.

Oil clearance of balancer shaft journal 2	Factory spec.	0.0300 to 0.111 mm 0.00119 to 0.00437 in.
	Allowable limit	0.20 mm 0.0079 in.

Balancer shaft journal 2 O.D.	Factory spec.	41.934 to 41.950 mm 1.6509 to 1.6515 in.
Balancer shaft bearing 2 I.D.	Factory spec.	41.980 to 42.045 mm 1.6528 to 1.6553 in.

Oil clearance of balancer shaft journal 3	Factory spec.	0.020 to 0.094 mm 0.00079 to 0.0037 in.
	Allowable limit	0.20 mm 0.0079 in.

Balancer shaft journal 3 O.D.	Factory spec.	21.947 to 21.960 mm 0.86406 to 0.86456 in.
Balancer shaft bearing 3 I.D.	Factory spec.	21.980 to 22.041 mm 0.86536 to 0.86775 in.

(1) Balancer Shaft Journal 3
(2) Balancer Shaft Journal 2
(3) Balancer Shaft Journal 1

W1030206

(3) Piston and Connecting Rod

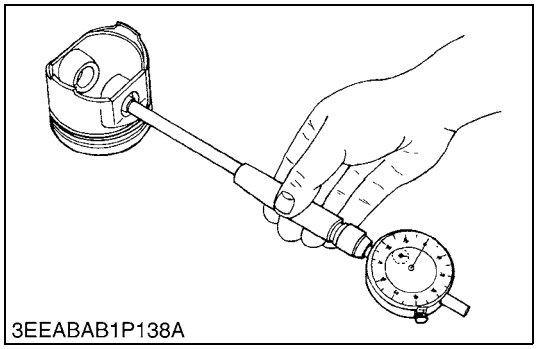
3EEABAB1P138A

Piston Pin Bore I.D.

1. Measure the piston pin bore I.D. in both the horizontal and vertical directions with a cylinder gauge.
2. If the measurement exceeds the allowable limit, replace the piston.

Piston pin bore I.D.	Factory spec.	25.000 to 25.013 mm 0.98426 to 0.98476 in.
	Allowable limit	25.05 mm 0.9862 in.

W1031817

https://truckmanualshub.com/

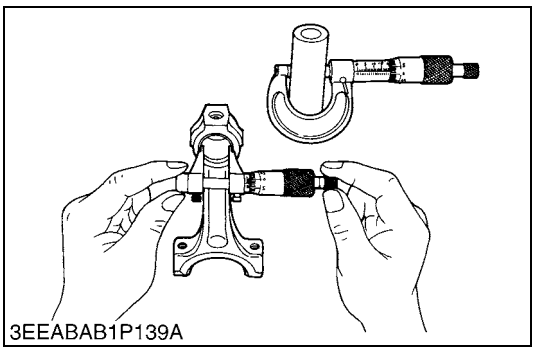
3EEABAB1P139A

Oil Clearance between Piston Pin and Small End Bushing

1. Measure the piston pin O.D. where it contacts the bushing with an outside micrometer.
2. Measure the small end bushing I.D. with an inside micrometer, and calculate the oil clearance.
3. If the oil clearance exceeds the allowable limit, replace the bushing. If it still exceeds the allowable limit, replace the piston pin.

Oil clearance between piston pin and small end bushing	Factory spec.	0.014 to 0.036 mm 0.00056 to 0.0014 in.
	Allowable limit	0.15 mm 0.0059 in.

Piston pin O.D.	Factory spec.	25.004 to 25.011 mm 0.98441 to 0.98468 in.
Small end bushing I.D.	Factory spec.	25.025 to 25.040 mm 0.98524 to 0.98582 in.

W1031982

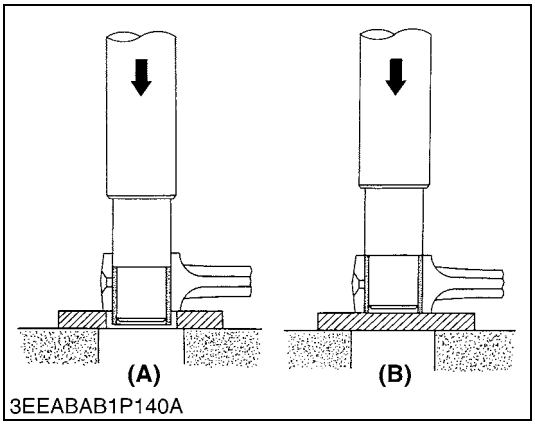

3EEABAB1P140A

Replacing Connecting Rod Small End Bushing

(When removing)

1. Press out the used small end bushing using a small end bushing replacing tool. (See page **"SPECIAL TOOLS"**.)

(When installing)

1. Clean a new small end bushing and bore, and apply engine oil to them.
2. Using a small end bushing replacing tool, press in a new bushing taking due care to see that the connecting rod oil hole matches the bushing hole.

(A) When removing **(B) When installing**

W1032140

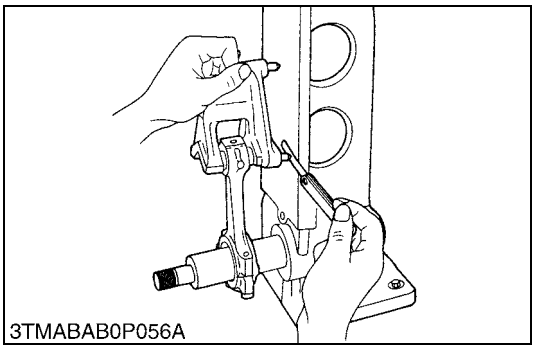
3TMABAB0P056A

Connecting Rod Alignment

■ **NOTE**

- **Since the I.D. of the connecting rod small end bushing is the basis of this check, check bushing for wear beforehand.**

1. Install the piston pin into the connecting rod.
2. Install the connecting rod on the connecting rod alignment tool.
3. Put a gauge over the piston pin, and move it against the face plate.
4. If the gauge does not fit squarely against the face plate, measure the space between the pin of the gauge and the face plate.
5. If the measurement exceeds the allowable limit, replace the connecting rod.

Connecting rod alignment	Allowable limit	0.05 mm 0.002 in.

W10314620

https://truckmanualshub.com/

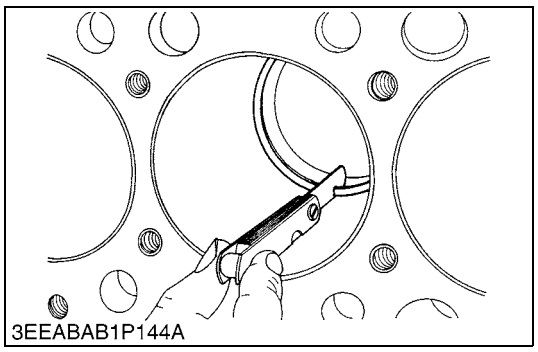

Piston Ring Gap

1. Insert the piston ring into the lower part of the liner (the least worn out part) with the piston.
2. Measure the ring gap with a feeler gauge.
3. If the gap exceeds the allowable limit, replace the ring.

Top ring	Factory spec.	D1503-M V2003-M V2403-M-T D1803-M-DI V2403-M-DI V2403-M-DI-T V2003-M-BG V2003-M-T-BG	0.20 to 0.35 mm 0.0079 to 0.013 in.
		D1703-M D1803-M V2203-M V2403-M D1703-M-BG V2203-M-BG V2403-M-BG	0.25 to 0.40 mm 0.0099 to 0.015 in.
	Allowable limit		1.25 mm 0.0492 in.

Second ring	Factory spec.	D1503-M D1703-M D1803-M V2203-M V2403-M D1803-M-DI V2403-M-DI D1703-M-BG V2003-M-BG V2203-M-BG V2403-M-BG	0.30 to 0.45 mm 0.012 to 0.017 in.
		V2003-M V2403-M-T V2403-M-DI-T V2003-M-T-BG	0.40 to 0.55 mm 0.016 to 0.021 in.
	Allowable limit		1.25 mm 0.0492 in.

Oil ring	Factory spec.	D1503-M D1703-M D1803-M V2003-M V2203-M V2403-M V2403-M-T V2403-M-DI-T D1703-M-BG V2003-M-BG V2003-M-T-BG V2203-M-BG V2403-M-BG	0.25 to 0.45 mm 0.0099 to 0.017 in.
		D1803-M-DI V2403-M-DI	0.20 to 0.40 mm 0.0079 to 0.015 in.
	Allowable limit		1.25 mm 0.0492 in.

W1032246

https://truckmanualshub.com/

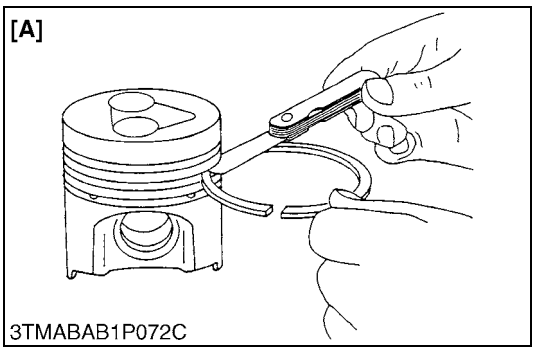

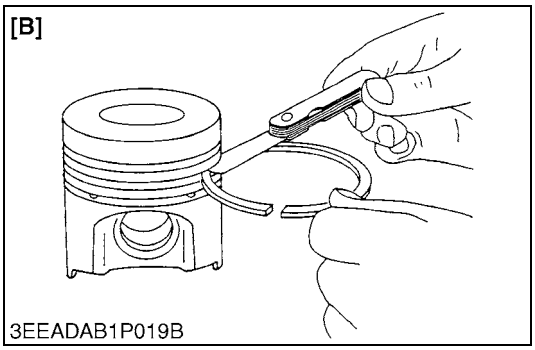

Clearance between Piston Ring and Groove

1. Clean the rings and the ring grooves, and install each ring in its groove.
2. Measure the clearance between the ring and the groove with a feeler gauge or depth gauge.
3. If the clearance exceeds the allowable limit, replace the piston ring.
4. If the clearance still exceeds the allowable limit with new ring, replace the piston.

Top Ring	Factory spec.	D1803-M-DI V2403-M-DI	0.050 to 0.090 mm 0.0020 to 0.0035 in.
	Allowable limit		0.20 mm 0.0079 in.
Second ring	Factory spec.	D1503-M D1703-M D1803-M V2003-M V2203-M V2403-M V2403-M-T V2403-M-ID-T D1703-M-BG V2003-M-BG V2003-M-T-BG V2203-M-BG V2403-M-BG	0.0930 to 0.128 mm 0.00367 to 0.00503 in.
		D1803-M-DI V2403-M-DI	0.0780 to 0.110 mm 0.00307 to 0.00433 in.
	Allowable limit		0.20 mm 0.0079 in.
Oil ring	Factory spec.	D1503-M D1703-M D1803-M V2003-M V2203-M V2403-M V2403-M-T V2403-M-DI-T D1703-M-BG V2003-M-BG V2003-M-T-BG V2203-M-BG V2403-M-BG	0.020 to 0.060 mm 0.00079 to 0.0023 in.
		D1803-M-DI V2403-M-DI	0.030 to 0.070 mm 0.0012 to 0.0027 in.
	Allowable limit		0.15 mm 0.0059 in.

(A) D1503-M, D1703-M, D1803-M
V2003-M, V2203-M, V2403-M
V2403-M-T
D1703-M-BG, V2003-M-BG
V2003-M-T-BG, V2203-M-BG
V2403-M-BG

(B) D1803-M-DI, V2403-M-DI
V2403-M-DI-T

W1032489

https://truckmanualshub.com/

(4) Crankshaft

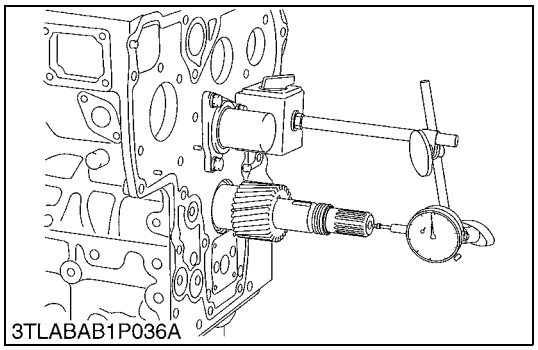
3TLABAB1P036A

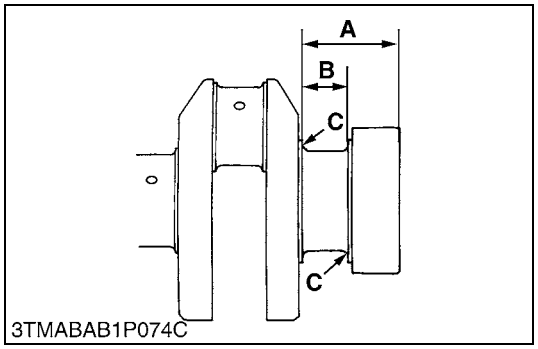

3TMABAB1P074C

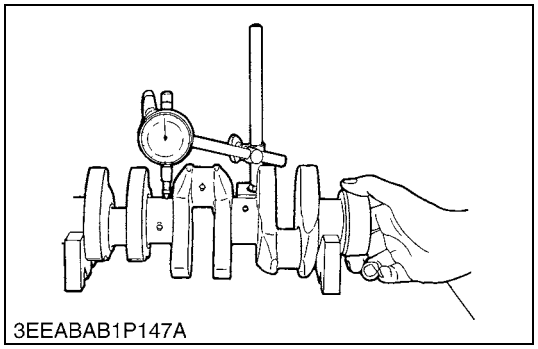
3EEABAB1P147A

Side Clearance of Crankshaft

1. Set a dial indicator with its tip on the end of the crankshaft.
2. Measure the side clearance by moving the crankshaft to the front and rear.
3. If the measurement exceeds the allowable limit, replace the thrust bearings.
4. If the same size bearing is useless because of the crankshaft journal wear, replace it with an oversize one referring to the table and figure.

Crankshaft side clearance	Factory spec.	0.15 to 0.31 mm 0.0059 to 0.012 in.
	Allowable limit	0.5 mm 0.02 in.

(Reference)

- Oversize dimensions of crankshaft journal

Oversize	0.2 mm 0.008 in.	0.4 mm 0.02 in.
Dimension **A**	54.50 to 54.70 mm 2.146 to 2.153 in.	54.60 to 54.80 mm 2.150 to 2.157 in.
Dimension **B**	26.20 to 26.25 mm 1.032 to 1.033 in.	26.40 to 26.45 mm 1.040 to 1.041 in.
Dimension **C**	2.8 to 3.2 mm radius 0.11 to 0.12 in. radius	2.8 to 3.2 mm radius 0.11 to 0.12 in. radius
The crankshaft journal must be fine-finished to higher than ∇∇∇∇ (0.4S)		

W1032880

Crankshaft Alignment

1. Support the crankshaft with V blocks on the surface plate at both end journals.
2. Set a dial indicator with its tip on the intermediate journal.
3. Measure the crankshaft alignment.
4. If the measurement exceeds the allowable limit, replace the crankshaft.

Crankshaft alignment	Allowable limit	0.02 mm 0.0008 in.

W1033001

https://truckmanualshub.com/

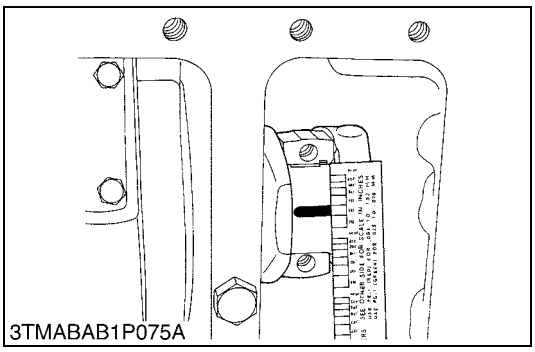
3TMABAB1P075A

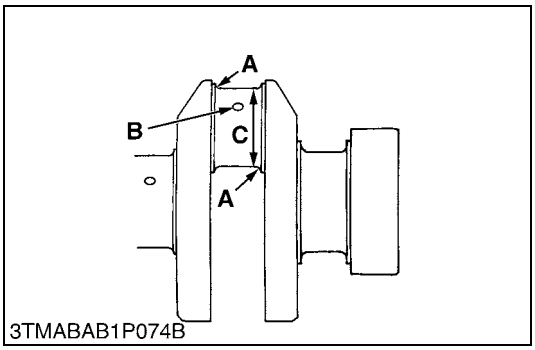

3TMABAB1P074B

Oil Clearance between Crankpin and Crankpin Bearing

1. Clean the crankpin and crankpin bearing.
2. Put a strip of plastigage on the center of the crankpin.
3. Install the connecting rod cap and tighten the connecting rod screws to the specified torque, and remove the cap again.
4. Measure the amount of the flattening with the scale, and get the oil clearance.
5. If the oil clearance exceeds the allowable limit, replace the crankpin bearing.
6. If the same size bearing is useless because of the crankpin wear, replace it with an undersize one referring to the table and figure.

■ **NOTE**

- **Never insert the plastigage into the crankpin oil hole.**
- **Be sure not to move the crankshaft while the connecting rod screws are tightened.**

Oil clearance between crankpin and crankpin bearing	Factory spec.	0.025 to 0.087 mm 0.00099 to 0.0034 in.
	Allowable limit	0.20 mm 0.0079 in.

Crankpin O.D.	Factory spec.	46.959 to 46.975 mm 1.8488 to 1.8494 in.
Crankpin bearing I.D.	Factory spec.	47.000 to 47.046 mm 1.8504 to 1.8522 in.

(Reference)

- Undersize dimensions of crankpin

Undersize	0.2 mm 0.008 in.	0.4 mm 0.02 in.
Dimension **A**	3.3 to 3.7 mm radius 0.13 to 0.14 in. radius	3.3 to 3.7 mm radius 0.13 to 0.14 in. radius
*Dimension **B**	1.0 to 1.5 mm relief 0.040 to 0.059 in. relief	1.0 to 1.5 mm relief 0.040 to 0.059 in. relief
Dimension **C**	46.759 to 46.775 mm dia. 1.8409 to 1.8415 in. dia.	46.559 to 46.575 mm dia. 1.8331 to 1.8336 in. dia.
The crankpin must be fine-finished to higher than ∇∇∇∇ (0.4S) *Holes to be de-burred and edges rounded with 1.0 to 1.5 mm (0.040 to 0.059 in.) relief.		

W1033106

https://truckmanualshub.com/

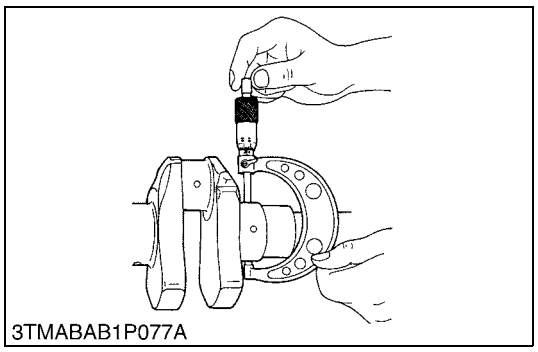
3TMABAB1P077A

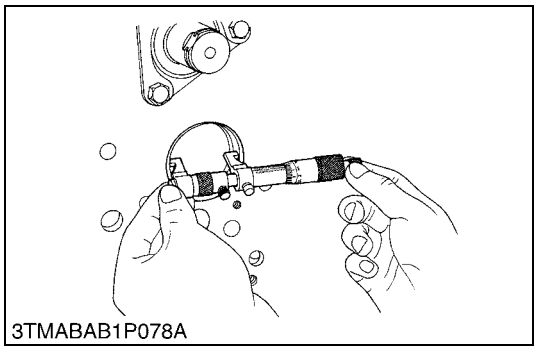
3TMABAB1P078A

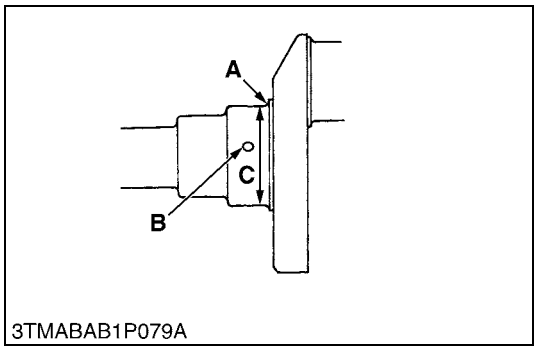

3TMABAB1P079A

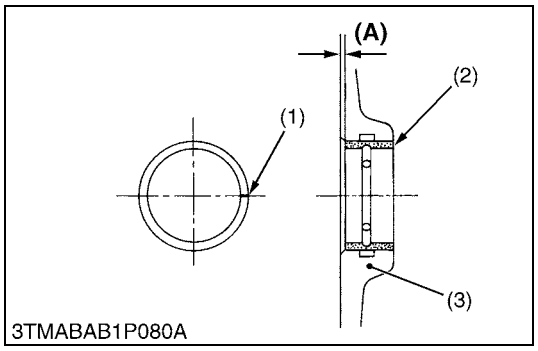

3TMABAB1P080A

Oil Clearance between Crankshaft Journal and Crankshaft Bearing 1

1. Measure the O.D. of the crankshaft journal with an outside micrometer.
2. Measure the I.D. of the crankshaft bearing 1 with an inside micrometer, and calculate oil clearance.
3. If the clearance exceeds the allowable limit, replace the crankshaft bearing 1.
4. If the same size bearing is useless because of the crankshaft journal wear, replace it with an undersize one referring to the table and figure.

Oil clearance between crankshaft journal and crankshaft bearing 1	Factory spec.	0.0400 to 0.118 mm 0.00158 to 0.00464 in.
	Allowable limit	0.20 mm 0.0079 in.

Crankshaft journal O.D.	Factory spec.	59.921 to 59.940 mm 2.3591 to 2.3598 in.
Crankshaft bearing 1 I.D.	Factory spec.	59.980 to 60.039 mm 2.3615 to 2.3637 in.

(Reference)

- Undersize dimensions of crankshaft journal

Undersize	0.2 mm 0.008 in.	0.4 mm 0.02 in.
Dimension **A**	2.8 to 3.2 mm radius 0.11 to 0.12 in. radius	2.8 to 3.2 mm radius 0.11 to 0.12 in. radius
*Dimension **B**	1.0 to 1.5 mm relief 0.040 to 0.059 in. relief	1.0 to 1.5 mm relief 0.040 to 0.059 in. relief
Dimension **C**	59.721 to 59.740 mm dia. 2.3513 to 2.3519 in. dia.	59.521 to 59.540 mm dia. 2.3434 to 2.3440 in. dia.
The crankshaft journal must be fine-finished to higher than ∇∇∇∇ (0.4S) *Holes to be de-burred and edges rounded with 1.0 to 1.5 mm (0.040 to 0.059 in.) relief.		

W1033717

Replacing Crankshaft Bearing 1

(When removing)

1. Press out the used crankshaft bearing 1 using a crankshaft bearing 1 replacing tool. (See page **"SPECIAL TOOLS"**.)

(When installing)

1. Clean a new crankshaft bearing 1 and crankshaft journal bore, and apply engine oil to them.
2. Using a crankshaft bearing 1 replacing tool, press in a new bearing 1 (2) so that its seam (1) directs toward the exhaust manifold side. (See figure.)

Dimension **(A)**	Factory spec.	4.20 to 4.50 mm 0.166 to 0.177 in.

(1) Seam
(2) Crankshaft Bearing 1
(3) Cylinder Block
(A) Dimension

W1033946

https://truckmanualshub.com/

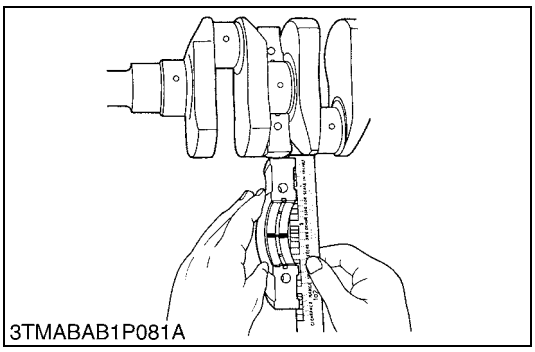
3TMABAB1P081A

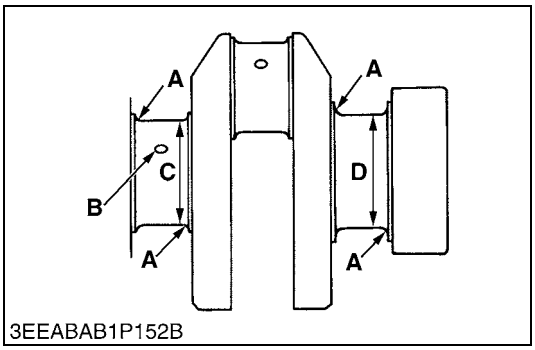

3EEABAB1P152B

Oil Clearance between Crankshaft Journal and Crankshaft Bearing 2

1. Put a strip of plastigage on the center of the journal.
2. Install the bearing case and tighten the baring case screws 1 to the specified torque, and remove the bearing case again.
3. Measure the amount of the flattening with the scale and get the oil clearance.
4. If the clearance exceeds the allowable limit, replace the crankshaft bearing 2.
5. If the same size bearing is useless because of the crankshaft journal wear, replace it with an undersize one referring to the table and figure.

■ **NOTE**

- **Be sure not to move the crankshaft while the bearing case screws are tightened.**

Oil clearance between crankshaft and crankshaft bearing 2	Factory spec.	0.0400 to 0.104 mm 0.00158 to 0.00409 in.
	Allowable limit	0.20 mm 0.0079 in.

Crankshaft journal O.D.	Factory spec.	59.921 to 59.940 mm 2.3591 to 2.3598 in.
Crankshaft bearing 2 I.D.	Factory spec.	59.980 to 60.025 mm 2.3615 to 2.3631 in.

(Reference)

- Undersize dimensions of crankshaft journal

Undersize	0.2 mm 0.008 in.	0.4 mm 0.02 in.
Dimension **A**	2.8 to 3.2 mm radius 0.11 to 0.12 in. radius	2.8 to 3.2 mm radius 0.11 to 0.12 in. radius
*Dimension **B**	1.0 to 1.5 mm relief 0.040 to 0.059 in. relief	1.0 to 1.5 mm relief 0.040 to 0.059 in. relief
Dimension **C, D**	59.721 to 59.740 mm dia. 2.3513 to 2.3519 in. dia.	59.521 to 59.540 mm dia. 2.3434 to 2.3440 in. dia.
The crankshaft journal must be fine-finished to higher than ∇∇∇∇ (0.4S) *Holes to be de-burred and edges rounded with 1.0 to 1.5 mm (0.040 to 0.059 in.) relief.		

W1083821

https://truckmanualshub.com/

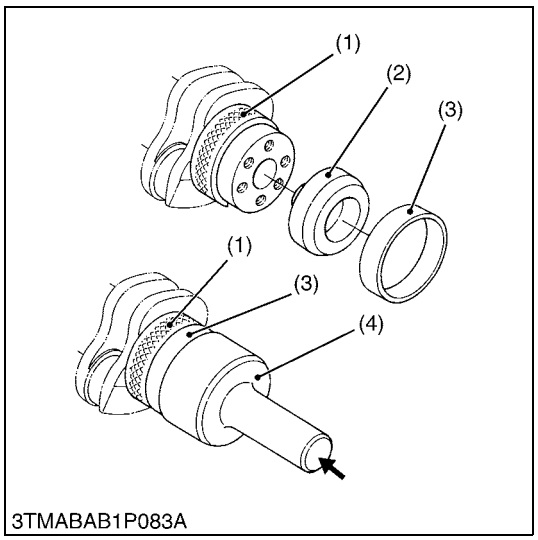

3TMABAB1P083A

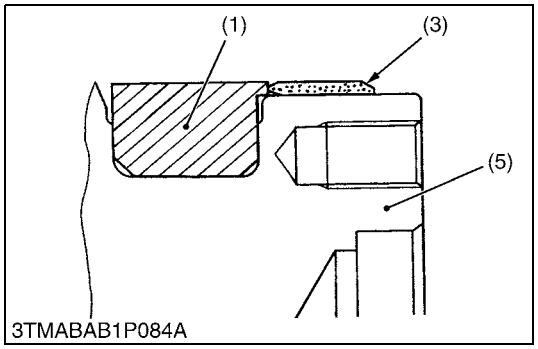

3TMABAB1P084A

Replacing Crankshaft Sleeve

1. Remove the used crankshaft sleeve (3).
2. Set the sleeve guide (2) to the crankshaft (5).
3. Set the stopper (1) to the crankshaft (5) as shown in figure.
4. Heat a new sleeve to a temperature between 150 and 200 °C (302 and 392 °F), and fix the sleeve to the crankshaft (5) as shown in figure.
5. Press fit the sleeve using the auxiliary socket for pushing (4). (Refer to **"SPECIAL TOOLS"**.)

■ **NOTE**

- **Mount the sleeve with its largely chamfered surface facing outward.**
- **Should heating is not enough, a sleeve might stop halfway, so careful.**

(1) Stopper
(2) Sleeve Guide
(3) Crankshaft Sleeve
(4) Auxiliary Socket for Pushing
(5) Crankshaft

W1033503

https://truckmanualshub.com/

(5) Cylinder

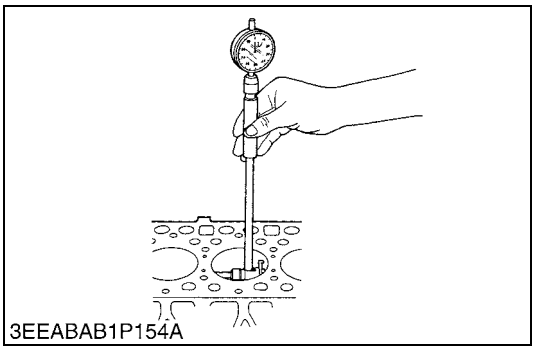
3EEABAB1P154A

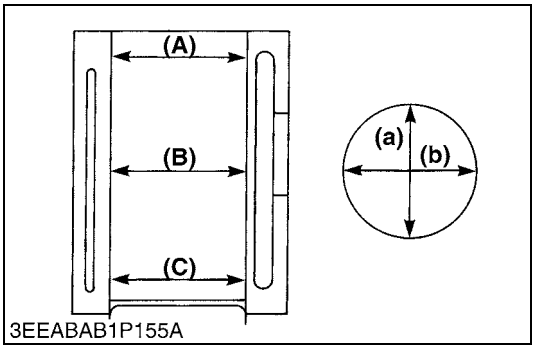

3EEABAB1P155A

Cylinder Wear

1. Measure the I.D. of the cylinder at the six positions (see figure) with a cylinder gauge to find the maximum and minimum I.D.'s.
2. Get the difference (Maximum wear) between the maximum and the minimum I.D.'s.
3. If the wear exceeds the allowable limit, bore and hone to the oversize dimension. (Refer to **"Correcting Cylinder"**.)
4. Visually check the cylinder wall for scratches. If deep scratches are found, the cylinder should be bored. (Refer to **"Correcting Cylinder"**.)

Cylinder I.D.	Factory spec.	D1503-M V2003-M V2003-M-BG V2003-M-T-BG	83.000 to 83.022 mm 3.2678 to 3.2685 in.
		D1703-M D1803-M V2203-M V2403-M V2403-M-T D1803-M-DI V2403-M-DI V2403-M-DI-T D1703-M-BG V2203-M-BG V2403-M-BG	87.000 to 87.022 mm 3.4252 to 3.4260 in.
	Allowable limit	D1503-M V2003-M V2003-M-BG V2003-M-T-BG	83.170 mm 3.2744 in.
		D1703-M D1803-M V2203-M V2403-M V2403-M-T D1803-M-DI V2403-M-DI V2403-M-DI-T D1703-M-BG V2203-M-BG V2403-M-BG	87.170 mm 3.4319 in.

A : Top
B : Middle
C : Bottom (Skirt)

(a) Right-angled to Piston Pin
(b) Piston Pin Direction

W1034389

https://truckmanualshub.com/

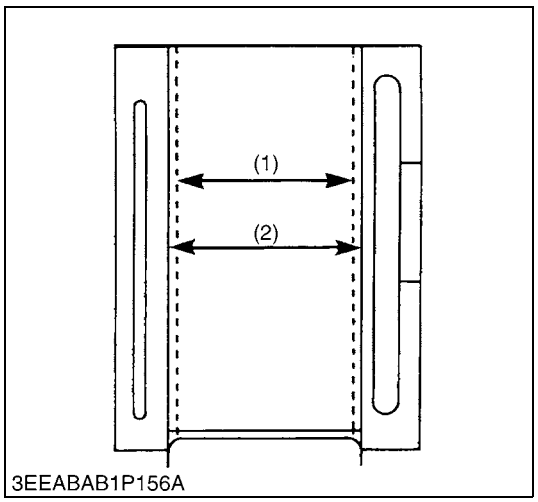

Correcting Cylinder (Oversize)

1. When the cylinder is worn beyond the allowable limit, bore and hone it to the specified dimension.

Oversize cylinder I.D.	Factory spec.	D1503-M V2003-M V2003-M-BG V2003-M-T-BG	83.250 to 83.272 mm 3.2776 to 3.2784 in.
		D1703-M D1803-M V2203-M V2403-M V2403-M-T D1803-M-DI V2403-M-DI V2403-M-DI-T D1703-M-BG V2203-M-BG V2403-M-BG	87.250 to 87.272 mm 3.4351 to 3.4359 in.
	Allowable limit	D1503-M V2003-M V2003-M-BG V2003-M-T-BG	83.420 mm 3.2843 in.
		D1703-M D1803-M V2203-M V2403-M V2403-M-T D1803-M-DI V2403-M-DI V2403-M-DI-T D1703-M-BG V2203-M-BG V2403-M-BG	87.420 mm 3.4417 in.
Finishing	Hone to 2.2 to 3.0 μmRz (0.000087 to 0.000118 in.Rz) ∇∇∇.		

2. Replace the piston and piston rings with oversize ones.
   Oversize : 0.25 mm (0.0098 in.)

■ **NOTE**

- **When the oversize cylinder is worn beyond the allowable limit, replace the cylinder block with a new one.**

(1) Cylinder I.D. (Before Correction) (2) Cylinder I.D. (Oversize)

W1034448

https://truckmanualshub.com/

(6) Oil Pump

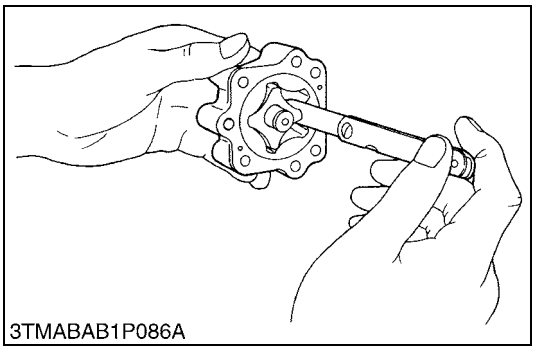
3TMABAB1P086A

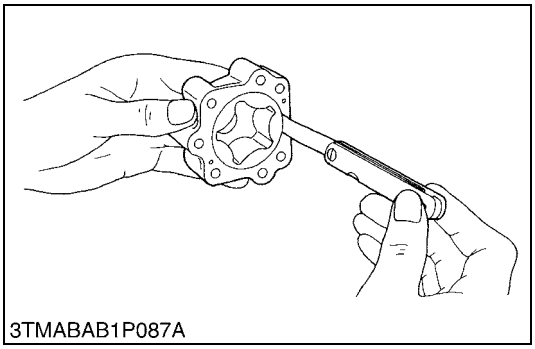
3TMABAB1P087A

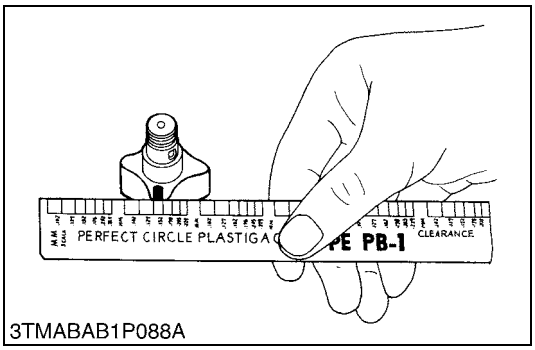

3TMABAB1P088A

Rotor Lobe Clearance

1. Measure the clearance between lobes of the inner rotor and the outer rotor with a feeler gauge.
2. Measure the clearance between the outer rotor and the pump body with a feeler gauge.
3. If the clearance exceeds the factory specifications, replace the oil pump rotor assembly.

Clearance between inner rotor and outer rotor	Factory spec.	0.030 to 0.14 mm 0.0012 to 0.0055 in.
	Allowable limit	0.2 mm 0.008 in.

Clearance between outer rotor and pump body	Factory spec.	0.11 to 0.19 mm 0.0044 to 0.0074 in.
	Allowable limit	0.25 mm 0.0098 in.

W1035296

Clearance between Rotor and Cover

1. Put a strip of plastigage onto the rotor face with grease.
2. Install the cover and tighten the screws.
3. Remove the cover carefully, and measure the width of the press gauge with a sheet of gauge.
4. If the clearance exceeds the factory specifications, replace oil pump rotor assembly.

Clearance between inner rotor and cover	Factory spec.	0.105 to 0.150 mm 0.00414 to 0.00590 in.
	Allowable limit	0.20 mm 0.008 in.

W1035444

(7) Starter

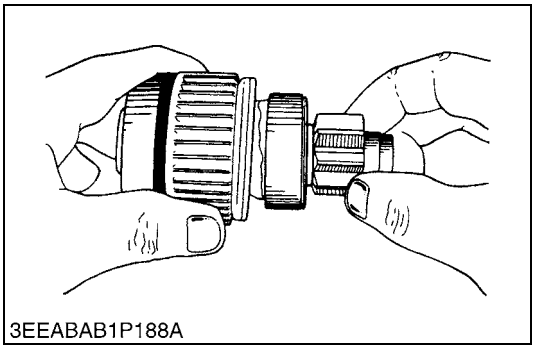
3EEABAB1P188A

Overrunning Clutch

1. Check the pinion and if worn or damage, replace the clutch assembly.
2. Check that the pinion turns freely and smoothly in the overrunning direction and does not slip in the cranking direction.
3. If the pinion slips or does not turn in both directions, replace the overrunning clutch assembly.

■ **NOTE**

- **Do not wash off the grease in the overrunning clutch with the chemicals or oils.**

W1156799

https://truckmanualshub.com/

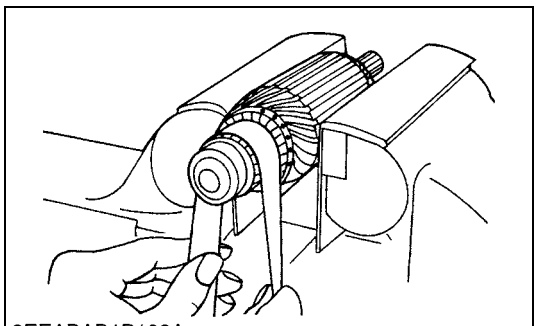
3EEABAB1P182A

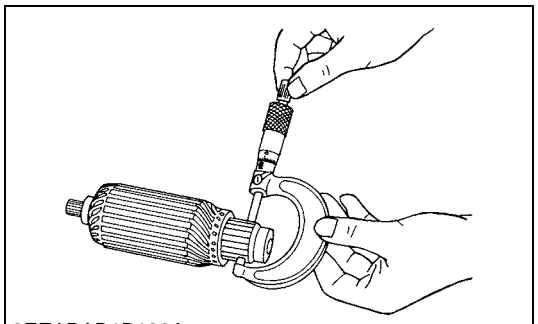
3EEABAB1P183A

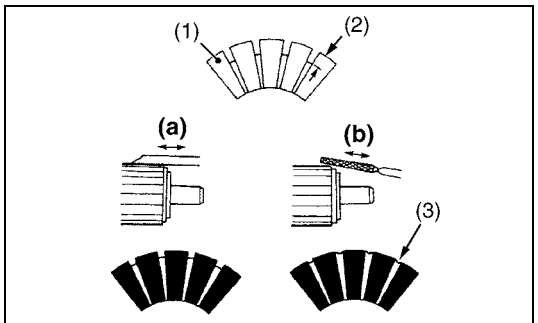

3EEABAB1P184A

Commutator and Mica

1. Check the contact of the commutator for wear, and grind the commutator with emery paper if it is slightly worn.
2. Measure the commutator O.D. with an outside micrometer at several points.
3. If the minimum O.D. is less than the allowable limit, replace the armature.
4. If the difference of the O.D.'s exceeds the allowable limit, correct the commutator on a lathe to the factory specification.
5. Measure the mica undercut.
6. If the undercut is less than the allowable limit, correct it with a saw blade and chamfer the segment edges.

Commutator O.D.	Factory spec.	D1503-M D1703-M V2003-M V2203-M D1803-M-DI D1703-M-BG V2003-M-BG V2003-M-T-BG V2203-M-BG	30.0 mm 1.18 in.
		D1803-M V2403-M V2403-M-T V2403-M-DI V2403-M-DI-T V2403-M-BG	35.0 mm 1.38 in.
	Allowable limit	D1503-M D1703-M V2003-M V2203-M D1803-M-DI D1703-M-BG V2003-M-BG V2003-M-T-BG V2203-M-BG	29.0 mm 1.14 in.
		D1803-M V2403-M V2403-M-T V2403-M-DI V2403-M-DI-T V2403-M-BG	34.0 mm 1.34 in.

Difference of O.D.'s	Factory spec.	Less than 0.02 mm 0.0008 in.
	Allowable limit	0.05 mm 0.002 in.

(1) Segment
(2) Depth of Mica
(3) Mica

(a) Correct
(b) Incorrect

W1112444

https://truckmanualshub.com/

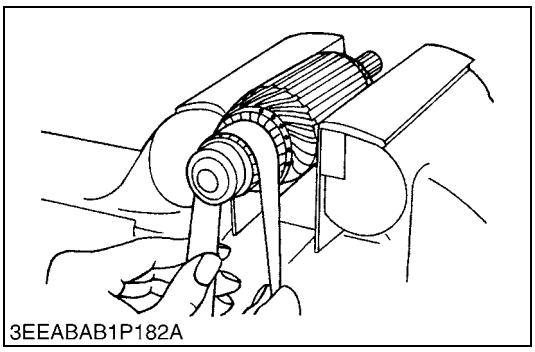
3EEABAB1P182A

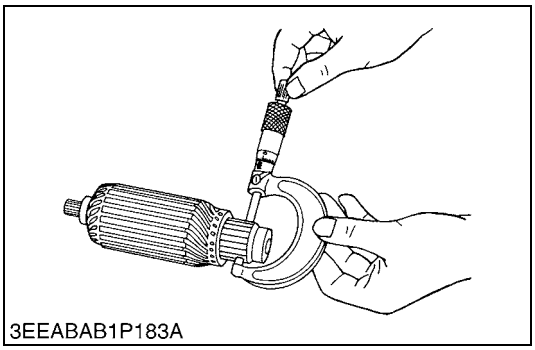
3EEABAB1P183A

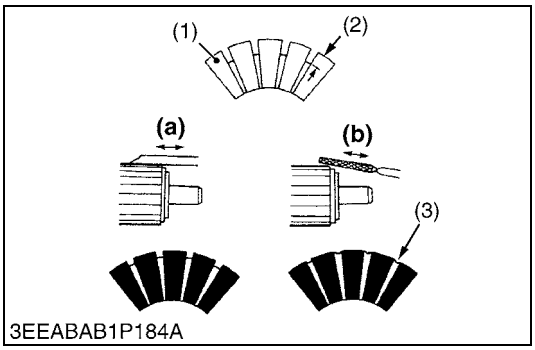

3EEABAB1P184A

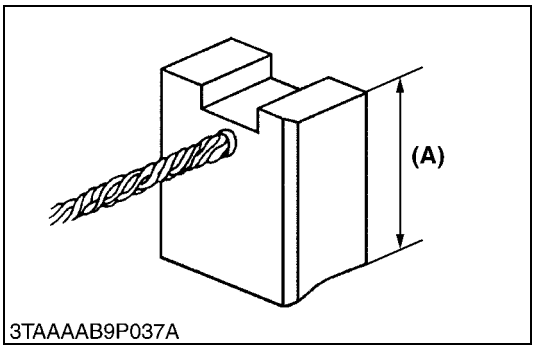

3TAAAAB9P037A

Commutator and Mica (Continued)

1. Check the contact of the commutator for wear, and grind the commutator with emery paper if it is slightly worn.
2. Measure the commutator O.D. with an outside micrometer at several points.
3. If the minimum O.D. is less than the allowable limit, replace the armature.
4. If the difference of the O.D.'s exceeds the allowable limit, correct the commutator on a lathe to the factory specification.
5. Measure the mica undercut.
6. If the undercut is less than the allowable limit, correct it with a saw blade and chamfer the segment edges.

Mica under cut	Factory spec.	D1503-M D1703-M D1803-M V2003-M V2203-M V2403-M V2403-M-T D1803-M-DI V2403-M-DI V2403-M-DI-T D1703-M-BG V2003-M-BG V2003-M-T-BG V2203-M-BG	0.45 to 0.75 mm 0.018 to 0.029 in.
		V2403-M-BG	0.55 to 0.85 mm 0.022 to 0.033 in.
	Allowable limit		0.20 mm 0.0079 in.

(1) Segment
(2) Depth of Mica
(3) Mica

(a) Correct
(b) Incorrect

W1155802

Brush Wear

1. If the contact face of the brush is dirty or dusty, clean it with emery paper.
2. Measure the brush length **(A)** with vernier caliper.
3. If the length is less than the allowable limit, replace the yoke assembly and brush holder.

Brush length **(A)**	Factory spec.		15.0 mm 0.591 in.
	Allowable limit	D1503-M D1703-M V2003-M V2203-M D1803-M-DI D1703-M-BG V2003-M-BG V2003-M-T-BG V2203-M-BG	11.0 mm 0.433 in.
		D1803-M V2403-M V2403-M-T V2403-M-DI V2403-M-DI-T	9.0 mm 0.35 in.
		V2403-M-BG	12.0 mm 0.472 in.

W1156360

https://truckmanualshub.com/

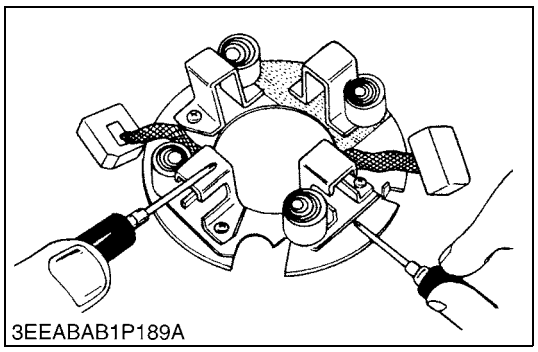
3EEABAB1P189A

Brush Holder

1. Check the continuity across the brush holder and the holder support with a circuit tester.
2. If it conducts, replace the brush holder.

W1156895

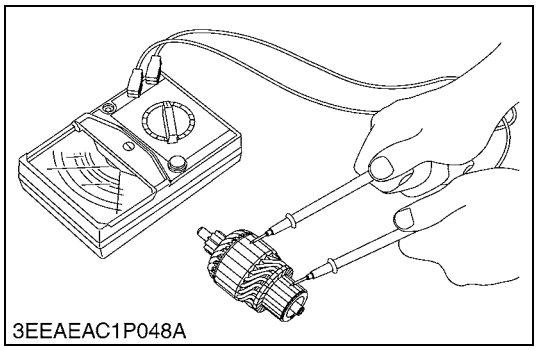
3EEAEAC1P048A

Armature Coil

1. Check the continuity across the commutator and armature coil core with resistance range of circuit tester.
2. If it conducts, replace the armature.
3. Check the continuity across the segments of the commutator with resistance range of circuit tester.
4. If it does not conduct, replace the armature.

W1156507

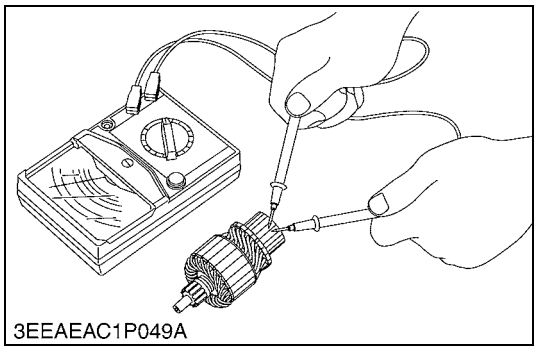
3EEAEAC1P049A

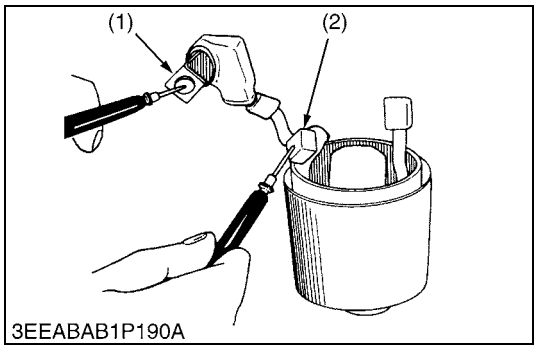

3EEABAB1P190A

Field Coil

1. Check the continuity across the lead (1) and brush (2) with a circuit tester.
2. If it does not conduct, replace the yoke assembly.
3. Check the continuity across the brush (2) and yoke (3) with a circuit tester.
4. If it conducts, replace the yoke assembly.

(1) Lead
(2) Bush
(3) Yoke

W1156968

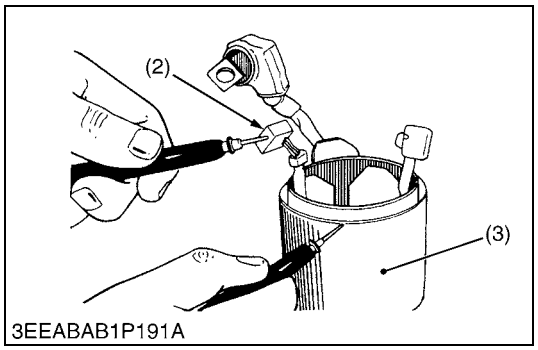

3EEABAB1P191A

https://truckmanualshub.com/

(8) Alternator

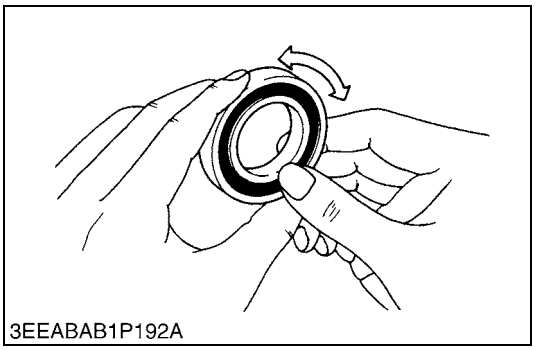
3EEABAB1P192A

Bearing

1. Check the bearing for smooth rotation.
2. If it does not rotate smoothly, replace it.

W1019790

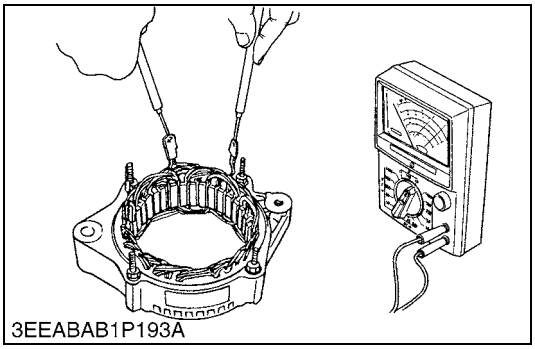
3EEABAB1P193A

Stator

1. Measure the resistance across each lead of the stator coil with resistance range of circuit tester.
2. If the measurement is not within factory specification, replace it.
3. Check the continuity across each stator coil lead and core with resistance range of circuit tester.
4. If infinity is not indicated, replace it.

Resistance	Factory spec.	Less than 1.0 Ω

W1019964

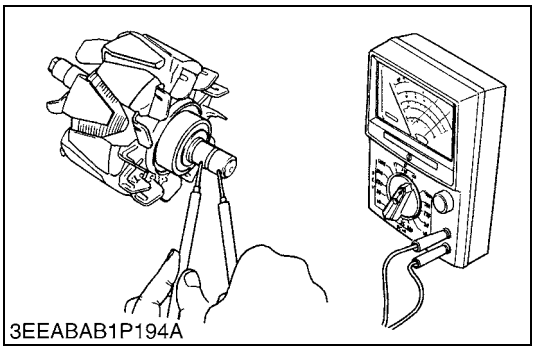
3EEABAB1P194A

Rotor

1. Measure the resistance across the slip rings.
2. If the resistance is not the factory specification, replace it.
3. Check the continuity across the slip ring and core with resistance range of circuit tester.
4. If infinity is not indicated, replace it.

Resistance	Factory spec.	2.9 Ω

W1020094

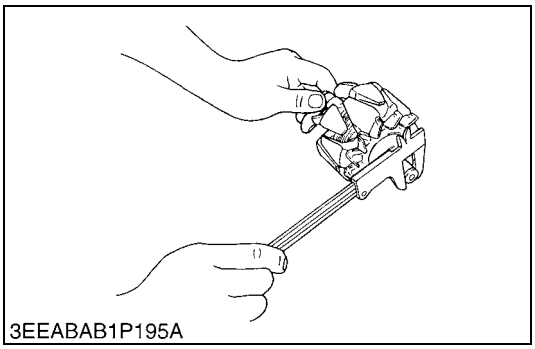
3EEABAB1P195A

Slip Ring

1. Check the slip ring for score.
2. If scored, correct with an emery paper or on a lathe.
3. Measure the O.D. of slip ring with vernier calipers.
4. If the measurement is less than the allowable limit, replace it.

Slip ring O.D.	Factory spec.	14.4 mm 0.567 in.
	Allowable limit	14.0 mm 0.551 in.

W1020208

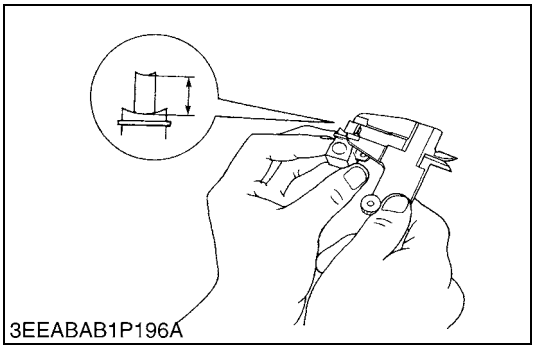
3EEABAB1P196A

Brush Wear

1. Measure the brush length with vernier calipers.
2. If the measurement is less than allowable limit, replace it.
3. Make sure that the brush moves smoothly.
4. If the brush is defective, replace it.

Brush length	Factory spec.	10.5 mm 0.413 in.
	Allowable limit	8.4 mm 0.33 in.

W1020329

https://truckmanualshub.com/

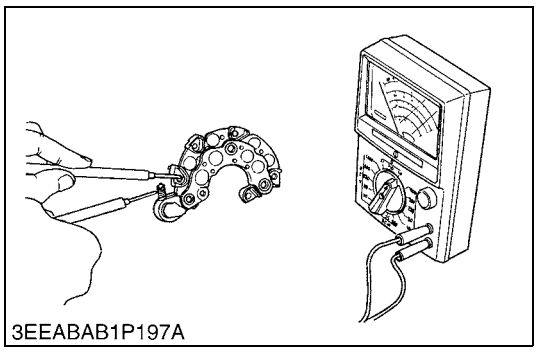
3EEABAB1P197A

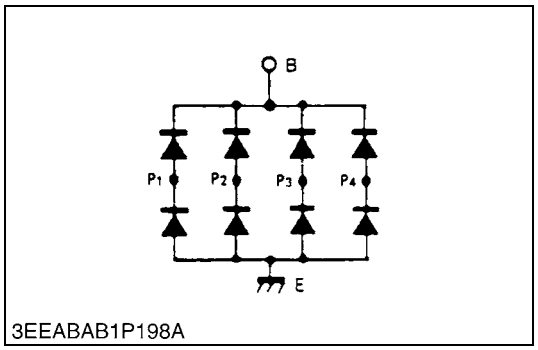

3EEABAB1P198A

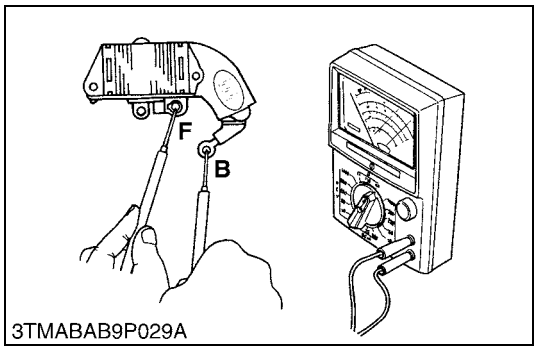

3TMABAB9P029A

Rectifier

1. Check the continuity across each diode of rectifier with resistance range of circuit tester.
2. The rectifier is normal if the diode in the rectifier conducts in one direction and does not conduct in the reverse direction.

W1020452

IC Regulator

1. Check the continuity across the **B** terminal (2) and the **F** terminal (1) of IC regulator with resistance range of circuit tester.
2. The IC regulator is normal if the conducts in one direction and does not conduct in the reverse direction.

(1) **F** Terminal (2) **B** Terminal

W1020645

https://truckmanualshub.com/

EDITOR:
KUBOTA FARM & INDUSTRIAL MACHINERY SERVICE, LTD.
64, ISHIZU-KITAMACHI, SAKAI-KU, SAKAI-CITY, OSAKA, 590-0823, JAPAN
PHONE : (81)72-241-1129
FAX : (81)72-245-2484
E-mail : ksos-pub@kubota.co.jp

KUBOTA Corporation

Printed in Japan 2008. 07, S, EI, EI, e Code No.9Y111-00142
2007. 03, S, EI, EI, e