https://truckmanualshub.com/

OPERATOR'S MANUAL

ENGLISH

KUBOTA FRONT MOWER

MODELS F2690E
F2690
F3990

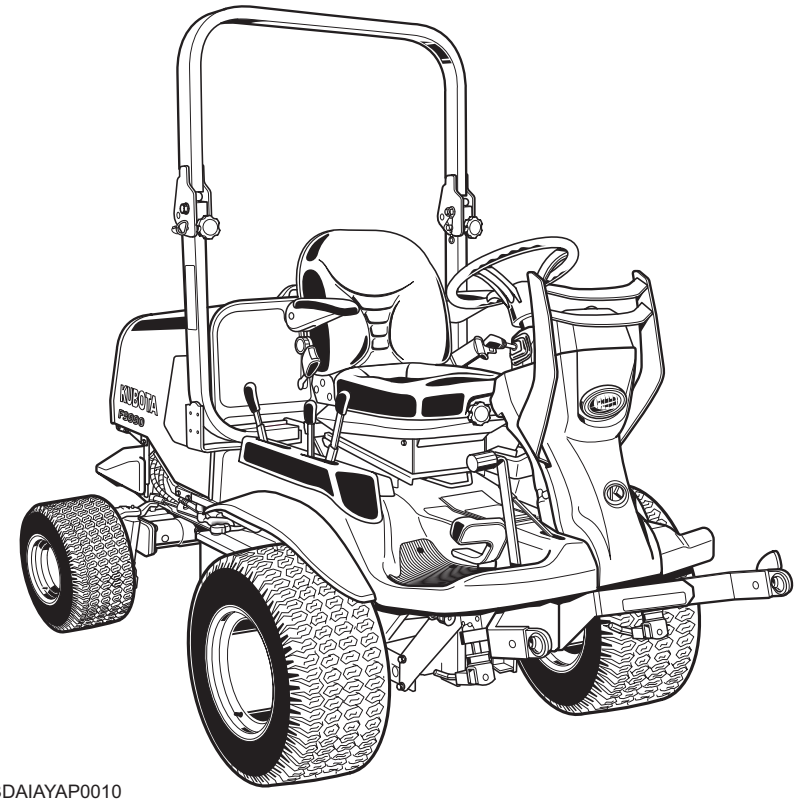

K3615-6296-2

1BDAIAYAP0010

READ AND SAVE THIS MANUAL

Kubota

https://truckmanualshub.com/

ABBREVIATION LIST

Abbreviations	Definitions
2WD	2 Wheel Drive
4WD	4 Wheel Drive
API	American Petroleum Institute
ASABE	American Society of Agricultural and Biological Engineers, USA
ASTM	American Society for Testing and Materials, USA
DIN	Deutsches Institut für Normung, GERMANY
DT	Dual Traction [4WD]
fpm	Feet Per Minute
GST	Glide Shift Transmission
T/M	Transmission
Hi-Lo	High Speed-Low Speed
HST	Hydrostatic Transmission
m/s	Meters Per Second
PTO	Power Take Off
RH/LH	Right-hand and left-hand sides are determined by facing in the direction of forward travel
F&R	Front and rear sides are determined by facing in the direction of forward travel
ROPS	Roll-Over Protective Structures
rpm	Revolutions Per Minute
r/s	Revolutions Per Second
SAE	Society of Automotive Engineers, USA
SMV	Slow Moving Vehicle
SPT	Semi-Permanent Type

California Proposition 65

⚠ WARNING ⚠

Engine exhaust, some of its constituents, certain vehicle components and fluids, contain or emit chemicals known to the State of California to cause cancer and birth defects or other reproductive harm.

IMPORTANT

The engine in this machine is not equipped by the manufacturer with a standard spark arrester.
It is a violation of California Public Resource Code Section 4442 to use or operate this engine on or near any forest-covered, brush-covered land, or grass- covered land unless the exhaust system is equipped with a working spark arrester meeting state laws. Other states or federal areas may have similar laws.

The above "IMPORTANT" text for the spark arrester is applicable to Model F2690E, F2690 alone.

https://truckmanualshub.com/

UNIVERSAL SYMBOLS

As a guide to the operation of your machine, various universal symbols have been utilized on the instruments panels and controls. The symbols are shown below with an indication of their meaning.

- Safety Alert Symbol
- Diesel Fuel
- Fuel-Level
- Engine-Rotational Speed
- Hourmeter/Elapsed Operating Hours
- Engine Coolant-Temperature
- Brake
- Parking Brake
- Battery Charging Condition
- Engine Oil-Pressure
- Turn Signal
- Engine-Stop
- Engine-Run
- Diesel Preheat/Glow Plugs (Low Temperature Start Aid)
- Starter Control
- Power Take-Off Control-Off Position (Disengaged)
- Power Take-Off Control-On Position (Engaged)
- Differential Lock
- Position Control-Raised Position
- Position Control-Lowered Position
- Engine Warning
- Remote Cylinder-Retract
- Remote Cylinder-Extend
- Steering Wheel-Tilt Control
- Head Lights OFF
- Head Lights ON
- Fast
- Slow
- Read Operator's Manual
- Machine-Forward Movement-Overhead View of Machine
- Machine-Rearward Movement-Overhead View of Machine
- Engine Speed Control
- Neutral
- Full Time 4WD
  This position provides 4WD machanically in any kind of the ground condition.
- Dual-Acting Overrunning 4WD
  This position provides 4WD autmatically only when the ground speed dictate between front and rear wheels (forward and backward).
- Regeneration
- DPF INHIBIT (Switch)
- Regeneration (Switch)
- Parked Regeneration
- Master System Warning
- Constant RPM Management

https://truckmanualshub.com/

ENGLISH

FOREWORD

You are now the proud owner of a KUBOTA FRONT MOWER. This machine is a product of KUBOTA's quality engineering and manufacturing. It is made of excellent materials and under a rigid quality control system. It will give you long, satisfactory service. To obtain the best use of your machine, please read this manual carefully. It will help you become familiar with the operation of the machine and contains many helpful hints about machine maintenance. It is KUBOTA's policy to utilize, as quickly as possible, every advance in our research. The immediate use of new techniques in the manufacturing of products may cause some small parts of this manual to become outdated. KUBOTA distributors and dealers will have the most up-to-date information. Please do not hesitate to consult them.

SAFETY FIRST

This symbol, the industry's "Safety Alert Symbol", is used throughout this manual and on labels on the machine itself to warn of the possibility of personal injury. Read these instructions carefully. It is essential that you read the instructions and safety regulations before you attempt to assemble or use this unit.

DANGER : Indicates an imminently hazardous situation which, if not avoided, will result in death or serious injury.

WARNING : Indicates a potentially hazardous situation which, if not avoided, could result in death or serious injury.

CAUTION : Indicates a potentially hazardous situation which, if not avoided, could result in minor or moderate injury.

IMPORTANT : Indicates that equipment or property damage could result if instructions are not followed.

NOTE : Gives helpful information.

https://truckmanualshub.com/

MANUAL DEL OPERADOR

KUBOTA

SEGADORA FRONTAL

MODELOS **F2690E**
F2690
F3990

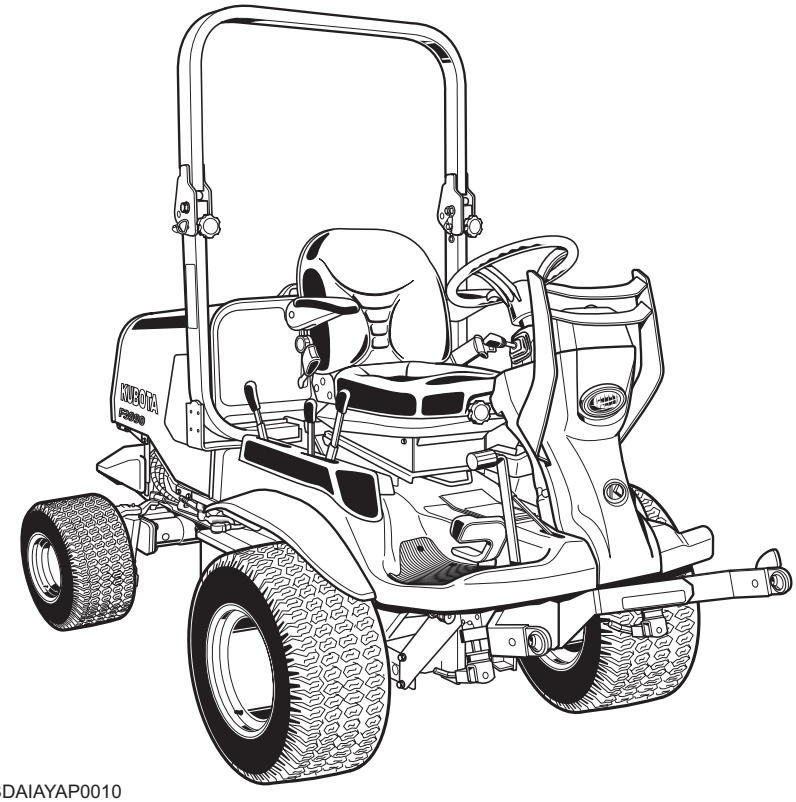

1BDAIAYAP0010

ESPAÑOL

LEA Y CONSERVE ESTE MANUAL

Kubota

https://truckmanualshub.com/

ENGLISH

CONTENTS

⚠SAFE OPERATION ..... ⚠-1

SERVICING OF MACHINE 1

SPECIFICATIONS 3

IMPLEMENT LIMITATIONS 5

INSTRUMENT PANEL AND CONTROLS 6

MOWER MOUNTING 7
- MOUNTING THE MOWER 7
- DISMOUNTING THE MOWER DECK 8
- MOWER TILT UP 8
  - How To Tilt Up 8
  - How To Mount Another Implement 8

PRE-OPERATION CHECK 9
- DAILY CHECK 9

OPERATING THE ENGINE 10
- EXHAUST AFTERTREATMENT DEVICES 10
  - Diesel Oxidation Catalyst and Diesel Particulate Filter (DPF) Muffler 10
  - Handling Points 11
  - DPF Regeneration Process 11
  - Auto Regeneration Operating Procedure 12
  - PM Warning Level and Required Procedures 13
  - Regeneration Inhibit Mode Operating Procedure 14
  - PM Warning Level and Required Procedures 15
  - Tips on DPF Regeneration 17
  - Handling at low temperature 17
- STARTING THE ENGINE 18
  - Key Switch 20
  - Cold Weather Starting 20
  - Block Heater (Option) 20
- STOPPING THE ENGINE 21
- WARMING UP 21
  - Warm-up and Transmission Oil in the Low Temperature Range 21
  - Engine Stop Lever and Fuel Valve (Inside the Hood) 21
- JUMP STARTING 22

OPERATING THE MACHINE 23
- OPERATING NEW MACHINE 23
  - Changing Lubricating Oil for New Machines 23
  - Engine Break-in 23
  - Machine Break-in 23
- OPERATING FOLDABLE ROPS 24
  - To Fold the ROPS 24
  - To Raise the ROPS to Upright Position 25
  - Adjustment of Foldable ROPS 25

https://truckmanualshub.com/

ENGLISH

STARTING 26
Operator's Seat 26
Globe Box 26
Steering Wheel Tilt Lever 27
Seat Belt 27
Head Light Switch 27
Lift Link Lowering Speed Control Knob 28
Hydraulic Lift Lever 28
High-Low Gear Shift Lever 29
4WD Lock Lever 29
PTO Lever 30
Throttle Lever 30
Parking Brake 30
Speed Control Pedal 31
Differential Lock Pedal 31
STOPPING 31
Stopping 31
CHECK DURING DRIVING 32
Immediately Stop the Engine if: 32
Easy Checker (TM) 32
LCD MONITOR 33
Fuel Gauge 33
Coolant Temperature Gauge 34
Hourmeter / Tachometer 34
Service Code Display 35
Overheat Alarm 35
ELECTRONIC ENGINE CONTROL 35
Constant RPM Management Control 35
PARKING 36
Parking 36
TRANSPORTING 36
Directions for Use of Power Steering 36

TIRES, WHEELS AND BALLAST 37
TIRES 37
Inflation Pressure 37
WHEELS 37
Front Wheels (Drive Wheels) 37
Rear Wheels (Steering Wheels) 38
BALLAST 38

MAINTENANCE 39
SERVICE INTERVALS 39
PERIODIC SERVICE CHART LABEL 42
LUBRICANTS, FUEL AND COOLANT 43

PERIODIC SERVICE 45
HOW TO OPEN THE HOOD 45
DAILY CHECK 46
Checking Seat Belt and ROPS 46
Checking Engine Oil Level 47
Checking Amount of Fuel and Refueling 48

https://truckmanualshub.com/

Checking and Cleaning Radiator Screen and Bonnet Screen to Prevent Overheating..49
Checking Tire Pressure 50
Checking Transmission Fluid Level 51
Checking Coolant Level 51
Checking DPF Muffler 52
Checking Movable Parts 52
EVERY 50 HOURS 53
Checking Engine Start System 53
Checking OPC System 54
Lubricating All Grease Fittings 54
Oiling 56
Checking Wheel Bolt Torque 57
EVERY 100 HOURS 57
Checking Battery Condition 57
Cleaning Air Cleaner Element 59
Checking Fuel Filter 60
Checking and Adjusting Brake Pedal 61
Checking Fan Drive Belt Tension 62
EVERY 200 HOURS 62
Changing Engine Oil 62
Replacing Engine Oil Filter Cartridge 63
Replacing Transmission Oil Filter Cartridge 64
EVERY 400 HOURS 64
Changing Transmission Fluid 64
Cleaning Transmission Strainer 65
Changing Rear Axle Differential Case Fluid [4WD] 66
Changing Rear Axle Gear Case Fluid [4WD] 66
Adjusting Rear Axle Pivot 67
Replacing Fuel Filter 67
EVERY 800 HOURS 67
Adjusting Engine Valve Clearance 67
EVERY 1000 HOURS or EVERY 1 YEAR 67
Replacing Air Cleaner Primary Element and Secondary Element 67
Checking Exhaust manifold 67
EVERY 1500 HOURS 67
Checking Fuel Injection Nozzle (Injection Pressure) 67
EVERY 2000 HOURS or EVERY 2 YEARS 68
Flush Cooling System and Changing Coolant 68
Anti-freeze 69
EVERY 3000 HOURS 70
Checking Turbo Charger 70
Checking Injection Pump 70
EVERY 1 YEAR 70
Checking Radiator Hose and Clamp 70
Checking Hydraulic Hose 71
Checking Fuel Lines 71
Checking Intake Air Line 72
Checking Engine Breather Hose 72
EVERY 4 YEARS 72
Replacing Hydraulic Hose 72
Replacing Fuel Lines 72
Replacing Engine Breather Hose 72

https://truckmanualshub.com/

Replacing Radiator Hose 72
Replacing Intake Air Line 72
SERVICE AS REQUIRED 73
Replacing Fuses 73
Replacing Light Bulb 74
Bleeding Fuel System 74
Adjusting Lift Springs (LH & RH) 75

STORAGE 76

TROUBLESHOOTING 77
ENGINE TROUBLESHOOTING 77
POWER TRAIN TROUBLE SHOOTING 78
BATTERY TROUBLESHOOTING 79
MACHINE TROUBLESHOOTING 80

INDEX 81

https://truckmanualshub.com/

SAFE OPERATION

Careful operation is your best insurance against an accident. Read and understand this section carefully before operation. All operators, no matter how experienced they may be, should read this and other related manuals before operation of the machine or any implement attached to it. It is the owner's obligation to instruct all operators in safe operation.
This cutting machine is capable of amputating hands and feet and throwing objects. Failure to observe the following safety instructions could result in serious injury or death.

1. BEFORE OPERATING

1. Know your equipment and its limitations. Read, understand and follow all instructions in this manual before attempting to start and operate the machine.
2. Pay special attention to the safety labels on the machine and mower.
3. KUBOTA recommends the use of a Roll Over Protective Structures (ROPS) and seat belt in almost all applications. This combination will reduce the risk of serious injury or death, should the machine be upset.
   The machine is equipped with a foldable ROPS, which may be temporarily folded down only when absolutely necessary for areas with height constraints.
   (There is no operator protection provided by the ROPS in the folded position. For operator safety the ROPS should be placed in the upright and locked position and the seat belt fastened for all other operations.)
   If the ROPS is loosened or removed for any reason, make sure that all parts are reinstalled correctly before operating the machine.
   Never modify or repair a ROPS because welding, bending, drilling, grinding, or cutting may weaken the structure.
   A damaged ROPS structure must be replaced, not repaired or revised.
   If any structural member of the ROPS is damaged, replace the entire structure at your local KUBOTA Dealer.

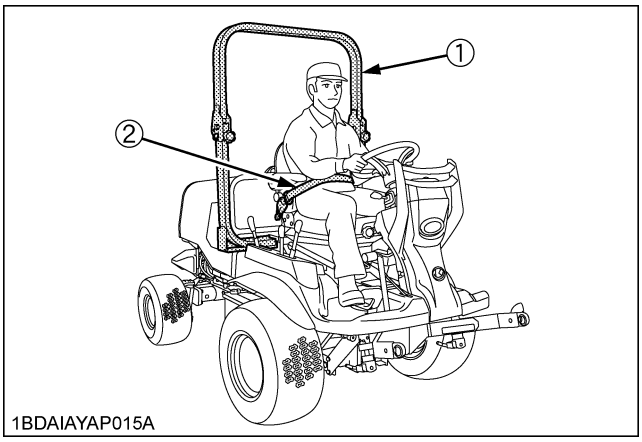

(1) ROPS
(2) Seat belt

4. Always use the seat belt when the ROPS is upright. Do not use the seat belt without a ROPS being upright. Check the seat belt regularly and replace if frayed or damaged.
5. The exhaust gas from the muffler is very hot. To prevent fire, do not expose dry grass, mowed grass, oil or any other combustible materials to exhaust gas. Use a spark arrester where required. Also keep the engine and muffler clean all the time. Replace the muffler if it has a fault.
6. Never wear loose, torn, or bulky clothing. It may catch on moving parts or controls, leading to the risk of accident. Safety boots or shoes, eye and hearing protection, gloves, dust mask, etc. are recommended.
7. Do not wear radio or music headphones while operating the machine.
   Safe operation requires your full attention.
8. Carefully check the vicinity before operating machine or any implement attached to it. Clear the work area of objects (wires, rocks, etc.) that might be picked up and thrown. Check for overhead clearance which may interfere with a ROPS.
9. Do not operate machine or any implement attached to it while under the influence of alcohol, drugs, or other substances or while fatigued.
10. Check brakes, and other mechanical parts for faulty adjustment and wear. Replace worn or damaged parts promptly. Check the tightness of all nuts and bolts regularly. (For further details, see "MAINTENANCE" section.)

https://truckmanualshub.com/

11. Keep the machine and attachments in good operating condition and keep safety devices in place and in proper working condition.
12. Do not modify the machine. Unauthorized modification may affect the function of the machine, which may result in personal injury.
13. Keep all shields and guards in place. Replace all missing or damaged items for your safety.
14. Never allow any bystanders around or near machine during operation.
    Be sure the area is clear of other people before mowing.
    Stop machine if anyone enters the area.
15. Before allowing other people to use your machine, explain proper operation to them and have them read this manual before operation.
16. Never allow passengers or non-qualified operators on the machine at any time. You must operate the machine from the seat only.
17. In addition to the design and configuration of equipment, hazard control and accident prevention are dependent on the awareness, concern, and prudence of personnel involved in the operation, transport, maintenance of facilities.
18. Keep your machine clean. Dirt, grease, and trash accumulations may contribute to fires or lead to personal injury.
19. Use only attachments recommended by KUBOTA.
    Use proper ballast to front or rear of machine to reduce the risk of upsets. Follow the "Safe Operation" procedures, specified in the Equipment's Manual.

2. OPERATING

◆ Starting

1. Never start the engine or operate levers from anywhere other than the seat.
2. Before starting the engine make sure that all levers and speed control pedal are in neutral, the parking brake is engaged, and Power Take Off (PTO) is disengaged.
   Fasten the seat belt if the ROPS is upright.
3. Do not start the engine while tilting the deck.
4. Do not start the engine by shorting across starter terminals or by bypassing the safety start switch. The machine may start and move if normal starting circuitry is bypassed.
5. Do not operate or idle engine in a poorly ventilated area. Exhaust gas contains carbon monoxide, a colorless, odorless gas they can be poisonous if not properly ventilated.

◆ Working

1. Watch where you are going at all times. Watch for and avoid obstacles. Be alert near trees and other obstructions.
2. To avoid tip over, slow down when turning on uneven terrain or before stopping.
3. Park the machine on a firm, level surface.
4. Do not drive at high speeds or turn the machine when the differential is locked.
5. Know what is behind you before backing up. Look to the rear before and while backing up. Do not mow while in reverse unless absolutely necessary and make sure the area immediately behind you is clear of obstructions or holes and small children. Use extra caution when the machine is equipped with the grass catcher. Your view to the rear is restricted.
6. When working in groups, always let others know what you are doing ahead of time.
7. Do not drive the machine on streets or highways. Watch for traffic when you cross roads or operate near roads.
8. Be aware of the mower discharge direction and do not point it at anyone.
9. When using any attachments, never direct discharge material toward bystanders. Do not allow anyone near the attachments while in operation.
   Do not mow when bystanders are present in the mowing area.
10. To reduce fire hazards, keep the engine exhaust area free of debris.
11. Be sure rotating blades and engine are stopped and the key is removed before placing hands or feet near blades and cleaning blockages or unclogging chute.
12. Shut the engine off and wait for all movement to stop before unclogging the chute of the grass catcher. [if equipped]
13. Always inspect the mower and the grass catcher [if equipped] after striking any foreign object. This will insure that all mower and grass catcher parts are safe and secure and not damaged.
    Repair or replace any damaged parts before re-starting.
14. Operate during daylight or in bright artificial light.
15. Do not operate where machine could tip or slip.
    Do not operate near ditches, holes, embankments, or other terrain which may collapse under the machine's weight. The risk of machine tip-over is increased when the ground is loose or wet.

◆ Operation on slopes

Slopes are a major factor related to loss-of-control and tip-over accidents, which can result in severe injury or death. All slopes require extra caution. If you cannot back up the slope or if you feel uneasy on it, do not mow it.

- Do not lift the grass container on a slope. [if equipped]

https://truckmanualshub.com/

DO

1. To avoid tip over, operate up and down slowly, not across. Stay off hills and slopes too steep for safe operation.
2. Remove obstacles such as rocks, tree limbs, etc.
3. Stay alert for holes in the terrain and other hidden hazards. Keep away from drop-offs. Uneven terrain could overturn the machine. Tall grass can hide obstacles.
4. Follow KUBOTA's recommendations for wheel weights or counterweights to improve stability.
5. The weight of grass in the grass container may increase the possibility of tip over. [if equipped]
6. Keep all movement on slopes slow and gradual. Do not make sudden changes in speed or direction.
7. Avoid starting or stopping on a slope. If tires lose traction, disengage the blades and proceed slowly straight down the slope.
8. Reduce speed and exercise extreme caution on slopes and in sharp turns to prevent tip-over or loss of control.
9. Use special caution when changing direction on slopes.
10. Shift "High - Low Gear Shift Lever" to the Low position when mowing or operating on slopes.

DO NOT

1. Do not turn on slopes unless necessary and then turn slowly and gradually downhill, if possible.
2. Do not mow near drop-offs, ditches, or embankments. The machine could suddenly turn over if a wheel falls over the edge of a cliff or ditch, or if an edge caves in.
3. Do not mow on wet grass. Reduced traction could cause sliding.
4. Do not try to stabilize the machine by putting your foot on the ground.
5. Do not use the grass catcher on steep slopes. [if equipped]
6. Do not stop or start suddenly when going uphill or downhill.
7. Never "freewheel". Do not let the machine travel downhill with HST pedal at neutral position.

◆ **Children**

Tragic accidents can occur if the operator is not alert to the presence of children. Children are attracted to the machine and the mowing activity. Never assume that children will remain where you last saw them.

1. Keep children out of the mowing area and under the watchful care of another responsible adult.
2. Be alert and turn the machine off if children enter the area.
3. Before and when backing, look behind and down for small children.
4. Never carry children. They may fall off and be seriously injured or interfere with safe machine operation.
5. Never allow children to operate the machine, even under adult supervision. Local regulation can restrict the age of the operator.
6. Use extra care when approaching blind corners, shrubs, trees, or other obstructions that might hide children from sight.

◆ **Operators, age 60 years and above**

Data indicates that operators, age 60 years and above, are involved in a large percentage of machine-related injuries. These operators should evaluate their ability to operate the machine safely enough to protect themselves and others from serious injury.

◆ **Stopping**

1. Make sure that the machine and all attachments have come to complete stop before dismounting.
2. Before dismounting, disengage the PTO, lower all implements, place all control levers in their neutral positions, apply parking brake, turn off the engine and remove the key.
3. Do not park the machine on a steep incline. Park on relatively flat areas.

3. USING THE PTO

1. Before installing or using PTO-driven equipment, read the manufacturer's manual and review the safety labels attached to the equipment.
2. Wait until all moving components have completely stopped before connecting, disconnecting, adjusting, cleaning, or servicing any PTO-driven equipment.
3. Use the PTO with KUBOTA approved attachments.
   The speed of the PTO:
   F2690E, F2690 2545 rpm at 3000 engine rpm
   F3990 2583 rpm at 2500 engine rpm

https://truckmanualshub.com/

4. USING THE LIFT LINK

1. Use lift link only with authorized attachments designed for lift link usage.
2. When using a lift link mounted attachment, be sure to install the adequate counter ballast weight specified in the attachment's manual.
3. When moving the machine a long distance, set the implement lowering control in the "LOCK" position to hold the implement in the raised position.
4. Do not turn the knob quickly.

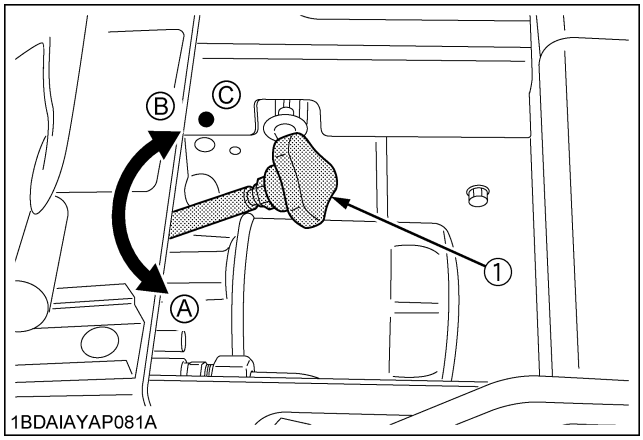

(1) Lift link lowering speed control knob
(A) "FAST": Turn counterclockwise slowly
(B) "SLOW": Turn clockwise
(C) "LOCK": Turn clockwise to the end

5. TRANSPORTING

1. Disengage power to attachment(s) when transporting or not in use.
2. Do not tow this machine. Use a suitable truck or trailer when transporting on public roads.
3. It is recommended that this machine not be used on public roads.
4. Use extra care when loading or unloading the machine into a trailer or truck.
5. Keep attachment(s) low when transporting.
6. Move very slowly when attachment is removed.

6. SERVICING

1. Before servicing the machine, park the machine on a firm, level surface, set the parking brake, stop the engine and remove the key.
2. Allow the machine to cool off before servicing the engine, muffler, etc.
3. Always stop the engine before refueling. Avoid spills and overfilling. Wipe up spilled fuel immediately.

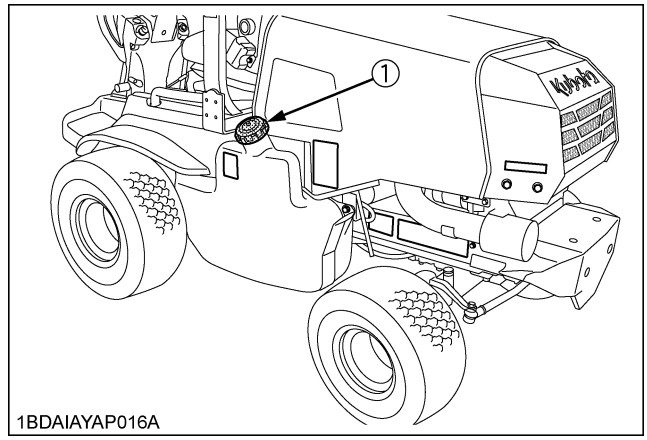

(1) Fuel tank cap

4. Use extra care in handling diesel fuel.
   (1) Use only an approved container.
   (2) Do not remove fuel cap or refuel with the engine running. Allow engine to cool before refueling. Do not smoke while refueling or when standing near fuel.
   (3) Do not refuel the machine indoors and always clean up spilled fuel or oil.
   (4) Do not store the machine or fuel container inside where there is an open flame, such as a water heater.
5. Do not smoke when working around the battery.
   Keep all sparks and flames away from battery. The battery presents an explosion hazard because it gives off hydrogen and oxygen...especially when recharging.
6. Before "JUMP STARTING" a dead battery, read and follow all of the instructions to help protect the alternator from damage due to extreme load changes. (See "JUMP STARTING" in "OPERATING THE ENGINE" section.)
   Batteries contain sulfuric acid and produce explosive gases. Follow the instructions below to prevent personal injury.
   - Wear eye and skin protection.
   - Keep sparks and flame away.
   - Always have adequate ventilation while charging or using the battery.
7. Keep first aid kit and fire extinguisher available at all times.

https://truckmanualshub.com/

8. Disconnect the battery's negative (-) cable before working on or near electric components.
9. Do not use or charge the refillable type battery if the fluid level is below the LOWER (lower limit level) mark. Otherwise, the battery component parts may prematurely deteriorate, which may shorten the battery's service life or cause an explosion. Check the fluid level regularly and add distilled water as required so that the fluid level is between the UPPER and LOWER levels.
10. To avoid sparks from an accidental short circuit, always disconnect the battery's negative (-) cable first and connect it last.

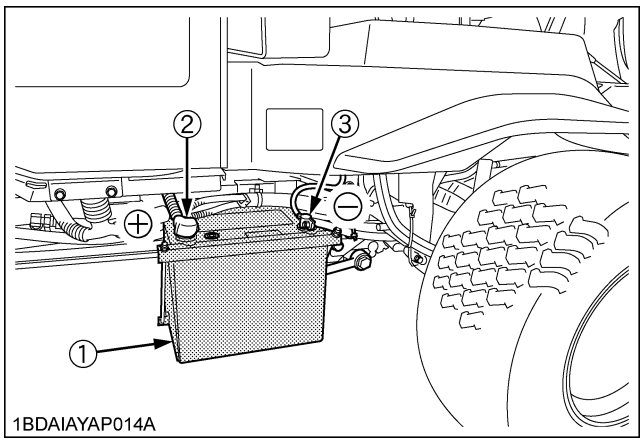

(1) Battery
(2) Positive cable (+)
(3) Negative cable (-)

11. Do not remove the radiator cap while coolant is hot. When cool, slowly rotate cap to the first stop and allow sufficient time for excess pressure to escape before removing the cap completely. If the machine has a coolant recovery tank, add coolant there instead of the radiator.
12. Provide adequate support when changing wheels or the wheel.
13. Make sure that wheel nuts have been tightened to the specified torque.
14. Do not attempt to mount a tire on a rim. This should be done by a qualified person with the proper equipment.
15. Always maintain the correct tire inflation pressure. Do not inflate tires above the recommended pressure shown in the Operator's Manual.

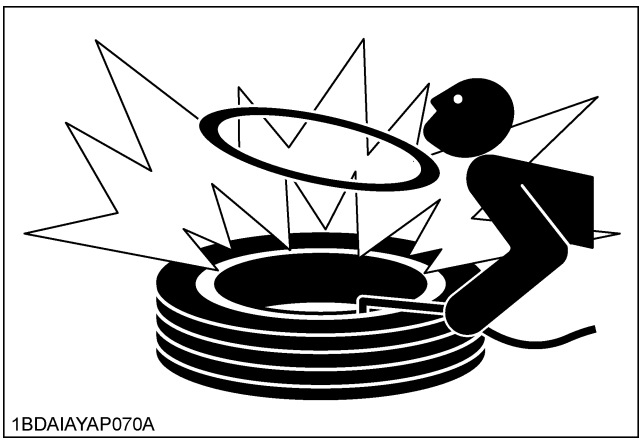

16. Securely support the machine when changing wheels.
17. Make sure that wheel bolts have been tightened to the specified torque.
18. Escaping hydraulic fluid under pressure has sufficient force to penetrate the skin causing serious personal injury. Before disconnecting lines, be sure to relieve all pressure. Before applying pressure to the system, make sure all connections are tight and that lines, pipes, and hoses are not damaged.

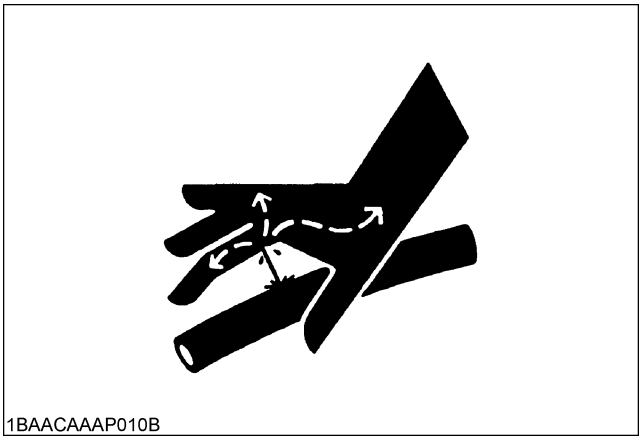

https://truckmanualshub.com/

19. Fluid escaping from pinholes may be invisible. Use a piece of cardboard or wood to search for suspected leaks: do not use hands. Use safety goggles or other eye protection.
    If injured by escaping fluid, see a medical doctor at once. Serious infection or reaction will result if proper medical treatment is not administered immediately. This fluid can produce gangrene or severe allergic reaction.

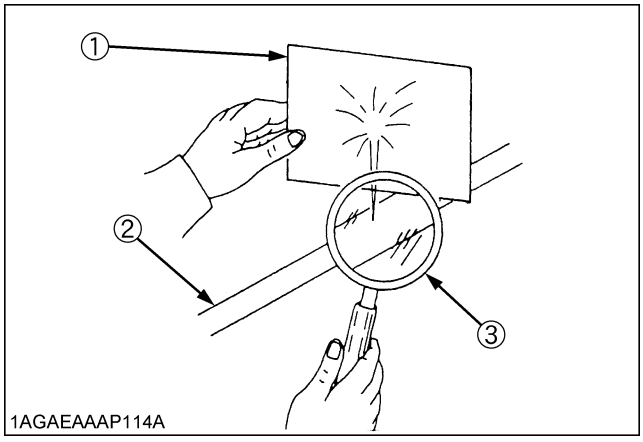

(1) Cardboard
(2) Hydraulic line
(3) Magnifying glass

20. Do not make adjustments or repairs with the engine running.
21. Keep machine free of grass, leaves, or other debris build-up.
22. Do not run a machine inside a closed area.

7. STORAGE

1. Keep the machine and fuel supply in a secure area and remove the key to prevent children or others from playing or tampering with them.
2. Do not store the machine in an area that may ignite fuel vapor. Allow the engine to cool before storing.
3. To avoid the danger of exhaust fume poisoning, do not operate the engine in a closed building without adequate ventilation.
4. To reduce fire hazards, clean the machine thoroughly before storage. Dry grass and leaves around the engine and mufflers may ignite.

https://truckmanualshub.com/

8. DANGER, WARNING AND CAUTION LABELS

[F2690E, F2690]

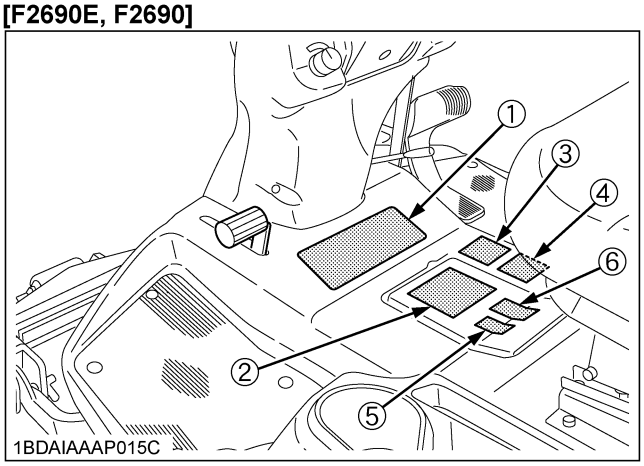

(1) Part No. K3601-4717-1

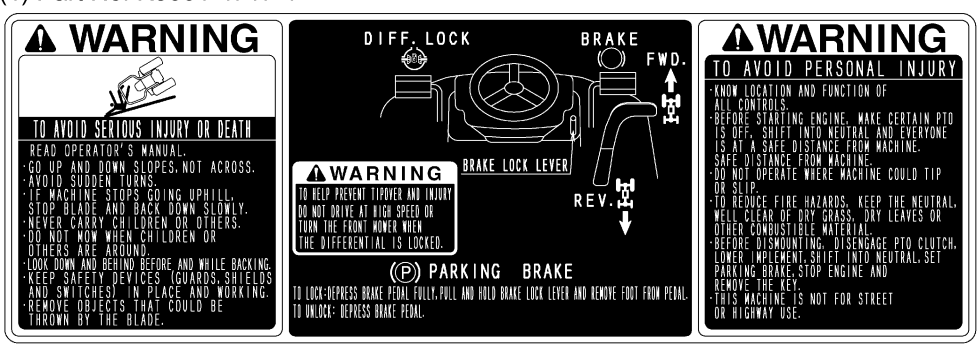

1BDAIAYAP071A

(2) Part No. K3601-4741-1

1BDAIAYAP072A

(3) Part No. K3601-4743-1

1BDAIAYAP073A

(4) Part No. K3601-4742-1

1BDAIAYAP074A

(5) Part No. 6C300-4744-1

1AGAIHFAP069A

(6) Part No. K3612-4744-1

1BDAIAAAP102A

1BDAIAYAP052A

https://truckmanualshub.com/

[F3990]

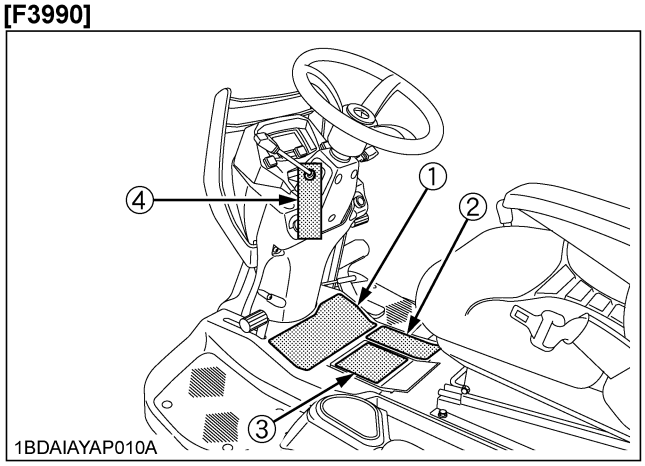

1BDAIAYAP010A

(1) Part No. K3615-4744-2

IMPORTANT: This machine is equipped with a Diesel Particulate Filter (DPF).
- If the regeneration cycle is interrupted several times, parked regeneration will be required.
- If machine is being used indoors, or combustible area, push the INHIBIT button (will light up).
- If indicators flash, follow chart below.

IMPORTANTE: Esta máquina está equipada con un filtro de partículas diesel (DPF).
- Se el ciclo de regeneración es interrumpido varias veces, la regeneración durante el estacionamiento será necesario.
- Si el máquina se usa adentro o en una zona combustible, apriete el botón INHIBIT (inhibición) (que se iluminará).
- Si los indicadores parpadean, siga la carta abajo.

	If you see/hear Cuando se vea o se oiga	Do this Haga esto	Result Resultado
1	OR / O; AND Beep / Y Bip	Push button (lights off) Apriete el botón (que se apaga)	
2	AND Beep / Y Bip	Park outside. Parking brake ON. PTO OFF. Throttle at idle. Speed control pedal in neutral. Inhibit off → Push button (lights up) Estacione fuera. Frend de estacionamiento puesto. Tdf apagada. Acelerador en marcha mínima. Pedal de control de velocidad en punto muerto. y apague el INHIBIT (inhibición). → Apriete el botón (que se ilumina).	Stays ON until REGEN is complete. La luz estará encendida hasta que se termine la regeneración.

DIFF. LOCK/ BLOQUEO DEL DIFERENCIAL
BRAKE/FRENO
FWD./ AVANCE
BRAKE LOCK LEVER
PALANCA DE BLOQUEO DEL FRENO
REV./ RETROCESO
PARKING BRAKE/FRENO DE ESTACIONAMIENTO

⚠ WARNING
TO HELP PREVENT TIPOVER AND INJURY DO NOT DRIVE AT HIGH SPEED OR TURN THE FRONT MOWER WHEN THE DIFFERENTIAL IS LOCKED.

⚠ ADVERTENCIA
PARA AYUDAR A PREVENIR LOS VUELCOS Y LAS LESIONES NO CONDUZCA A ALTA VELOCIDAD NI HAGA GIRAR LA CORTADORA DELANTERA CUANDO EL DIFERENCIAL ESTE BLOQUEADO EL.

TO LOCK: DEPRESS BRAKE PEDAL FULLY, PULL AND HOLD BRAKE LOCK LEVER AND REMOVE FOOT FROM PEDAL.
TO UNLOCK: DEPRESS BRAKE PEDAL.
PARA BLOQUEARLO: PRESIONE A FONDO EL PEDAL DEL FRENO. TIRE DE LA PALANCA DE BLOQUEO DEL FRENO Y SOSTÉNGALA, Y RETIRE EL PIE DEL PEDAL.
PARA DESBLOQUEARLO: PRESIONE EL PEDAL DEL FRENO.

1BDAIAYAP092A

(2) Part No. K3615-4743-2

⚠ WARNING

TO AVOID SERIOUS INJURY OR DEATH
- READ OPERATOR'S MANUAL.
- GO UP AND DOWN SLOPES, NOT ACROSS.
- AVOID SUDDEN TURNS.
- IF MACHINE STOPS GOING UPHILL, STOP BLADE AND BACK DOWN SLOWLY.
- NEVER CARRY CHILDREN OR OTHERS.
- DO NOT MOW WHEN CHILDREN OR OTHERS ARE AROUND.
- LOOK DOWN AND BEHIND BEFORE AND WHILE BACKING.
- KEEP SAFETY DEVICES (GUARDS, SHIELDS AND SWITCHES) IN PLACE AND WORKING.
- REMOVE OBJECTS THAT COULD BE THROWN BY THE BLADE.

⚠ ADVERTENCIA

PARA EVITAR LESIONES SERIAS, O LA MUERTE
- LEA EL MANUAL DEL OPERADOR.
- SUBA Y BAJE PENDIENTES, PERO NO LAS CRUCE.
- EVITE LOS GIROS REPENTINOS.
- SI LA MAQUINA SE PARA SUBIENDO UNA PENDIENTE, PARE LA CUCHILLA Y RETROCEDA LENTAMENTE.
- NO LLEVE NUNCA NIÑOS NI TRANSPORTE OTRAS COSAS.
- NO SIEGUE CUANDO HAYA NIÑOS U OTRAS PERSONAS ALREDEDOR.
- MIRE HACIA ABAJO Y HACIA ATRAS ANTES DE RETROCEDER Y MIENTRAS RETROCEDE.
- MANTENGA LOS DISPOSITIVOS DE SEGURIDAD (PROTECCIONES, PANTALLAS E INTERRUPTORES) EN SUS POSICIONES Y FUNCIONANDO.
- QUITE LOS OBJETOS QUE PUEDAN SALIR EXPULSADOS POR LA CUCHILLA.

1BDAIAYAP004A

(3) Part No. K3615-4742-2

⚠ WARNING

TO AVOID PERSONAL INJURY
- KNOW LOCATION AND FUNCTION OF ALL CONTROLS.
- BEFORE STARTING ENGINE, MAKE CERTAIN PTO IS OFF, SHIFT INTO NEUTRAL AND EVERYONE IS AT A SAFE DISTANCE FROM MACHINE. SAFE DISTANCE FROM MACHINE
- DO NOT OPERATE WHERE MACHINE COULD TIP OR SLIP.
- TO REDUCE FIRE HAZARDS, KEEP THE NEUTRAL WELL CLEAR OF DRY GRASS, DRY LEAVES OR OTHER COMBUSTIBLE MATERIAL.
- BEFORE DISMOUNTING, DISENGAGE PTO CLUTCH, LOWER IMPLEMENT, SHIFT INTO NEUTRAL, SET PARKING BRAKE, STOP ENGINE AND REMOVE THE KEY.
- THIS MACHINE IS NOT FOR STREET OR HIGHWAY USE.

⚠ ADVERTENCIA

PARA EVITAR LESIONES
- CONOZCA LA UBICACIÓN Y LA FUNCION DE TODOS LOS CONTROLES.
- ANTES DE ARRANCAR EL MOTOR, ASEGURESE QUE LA PTO ESTÉ APAGADA, QUE LA MAQUINA ESTÉ EN PUNTO MUERTO Y QUE LAS PERSONAS SE ENCUENTREN A UNA DISTANCIA SEGURA DE LA MAQUINA.
- NO MANEJE LA MAQUINA DONDE PUEDA VOLCAR O PATINAR.
- PARA REDUCIR PELIGROS DE INCENDIO, MANTENGA LA MAQUINA EN PUNTO MUERTO, ALEJADA DE LA HIERBA Y LAS HOJAS SECAS O DE OTROS MATERIALES COMBUSTIBLES.
- ANTES DE BAJARSE DE LA MAQUINA, DESEMBRAGUE LA PTO, BAJE EL IMPLEMENTO, CAMBIE A PUNTO MUERTO, PONGA EL FRENO DE ESTACIONAMIENTO, PARE EL MOTOR Y RETIRE LA LLAVE DE CONTACTO.
- ESTA MAQUINA NO SE DEBE USAR EN CALLES NI EN CARRETERAS.

1BDAIAYAP076A
1BDAIAYAP094A

(4) Part No. K3615-4722-1

⚠ WARNING

To avoid personal injury:
Diesel Particulate Filter(DPF) Equipped. The DPF and exhaust system during regeneration mode has hot components and exhaust gases. Read the operator manual before operation of this machine.

1BDAIAYAP006A

⚠ ADVERTENCIA

Para evitar heridas personales:
Equipado con DPF(Diesel Patriculate Filter). El DPF y el sistema de escape durante el modo de regeneración tienen componentes calientes y gases de escape. Lea el manual de operador antes de operar esta máquina.

1BDAIAYAP006B

https://truckmanualshub.com/

[F2690E, F2690]

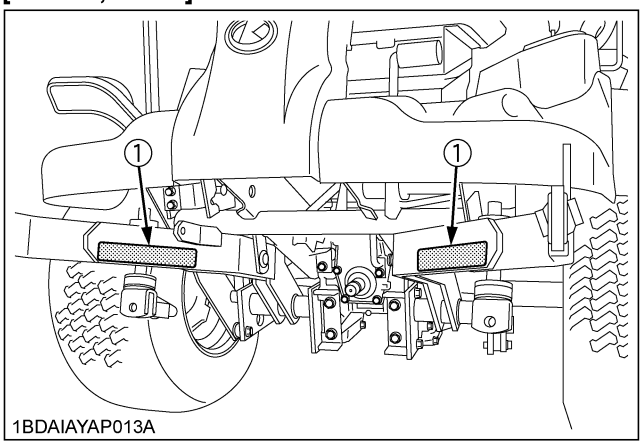

1BDAIAYAP013A

[F2690E, F2690]

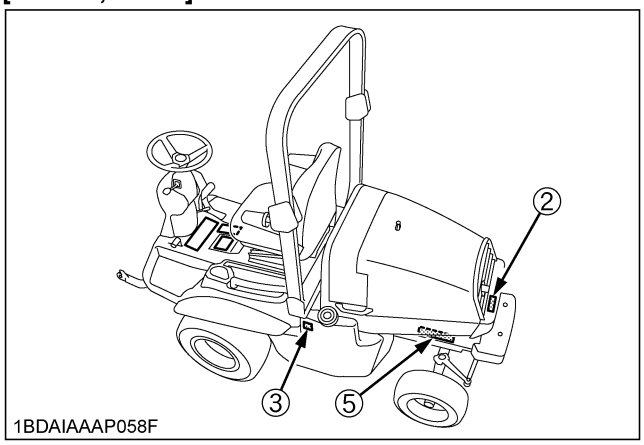

1BDAIAAAP058F

[F2690E, F2690]

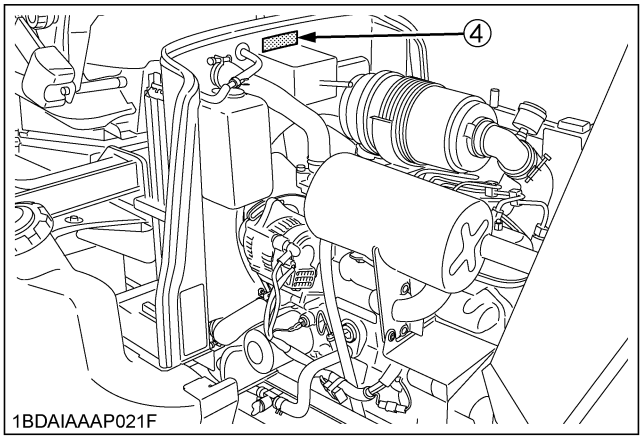

1BDAIAAAP021F

(1) Part No. K3615-4723-1

1BDAIAYAP077A

(2) Part No. K3615-4728-1

1BDAIAYAP078A

(3) Part No. K3611-4744-2

Diesel fuel only

No fire

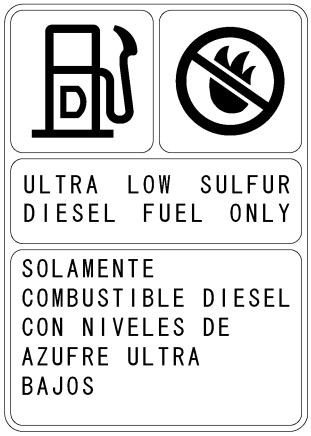

1BDAIATAP020A

(4) Part No. K2581-6543-1

Stay clear of engine fan and fan belt.

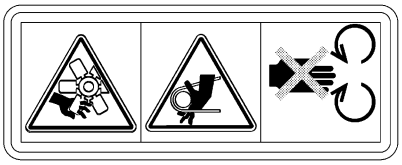

1AGAJAXAP052E

(5) Part No. K3611-4765-1

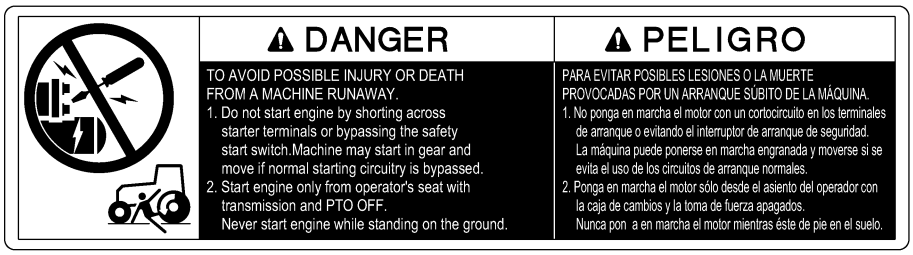

1BDAIAAAP050A
1BDAIAYAP054A

https://truckmanualshub.com/

[F3990]

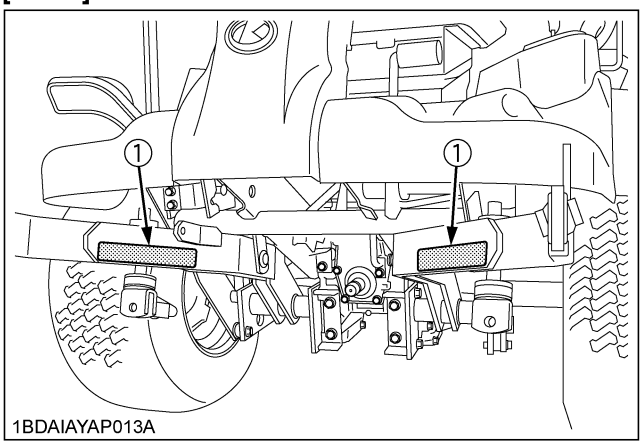

1BDAIAYAP013A

[F3990]

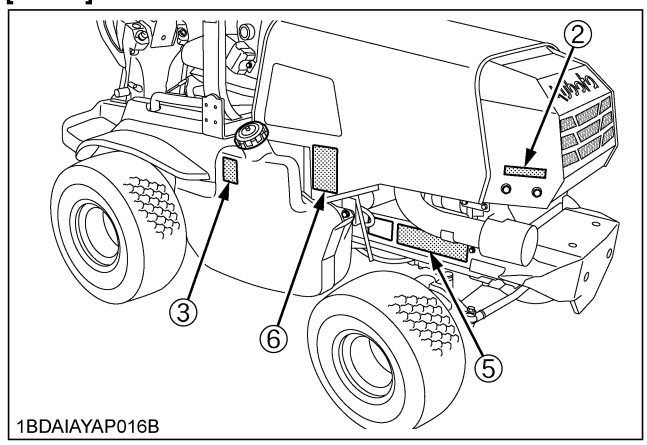

1BDAIAYAP016B

[F3990]

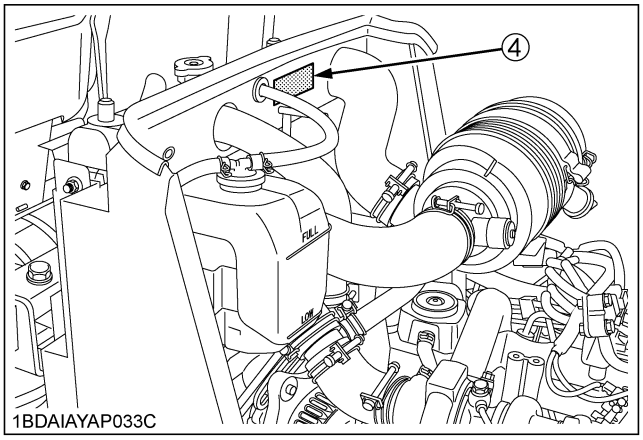

1BDAIAYAP033C

(1) Part No. K3615-4723-1

1BDAIAYAP077A

(2) Part No. K3615-4728-1

1BDAIAYAP078A

(3) Part No. K3611-4744-2

Diesel fuel only

No fire

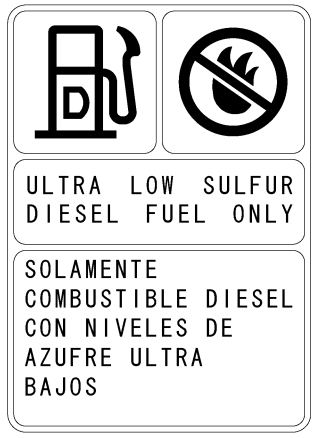

1BDAIATAP020A

(4) Part No. K2581-6543-1

Stay clear of engine fan and fan belt.

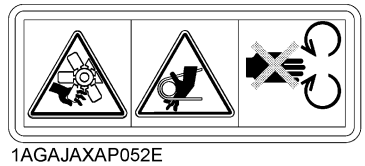

1AGAJAXAP052E

(5) Part No. K3611-4765-1

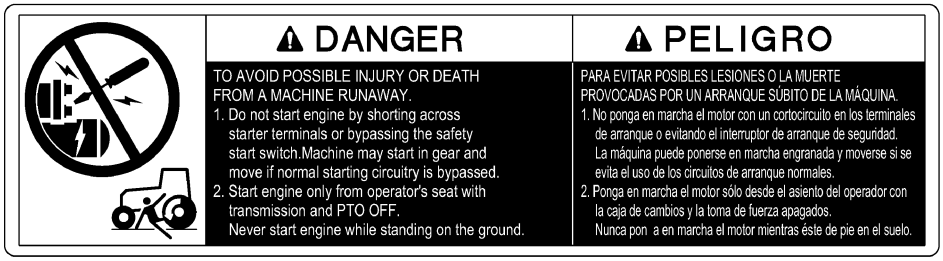

1BDAIAAAP050A
1BDAIAYAP065A

(6) Part No. K3615-4721-1
[F3990 only]

1BDAIAYAP005A

https://truckmanualshub.com/

[F2690E, F2690, F3990]

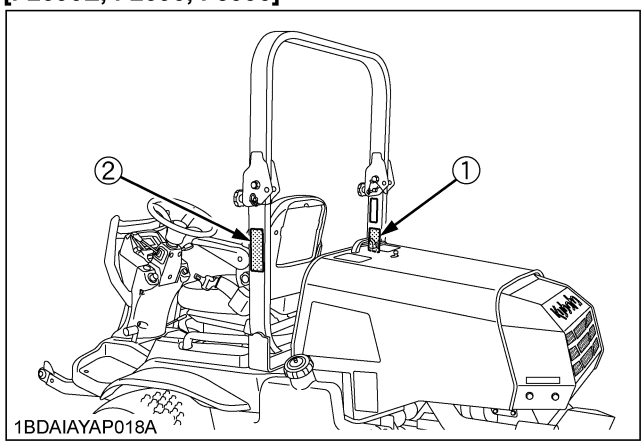

[F2690E, F2690, F3990]

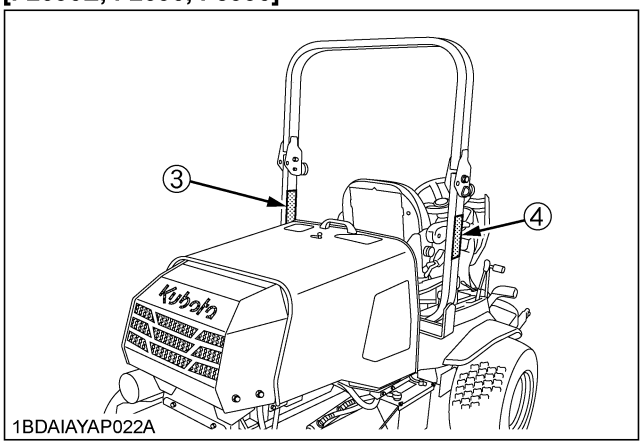

(1) Part No. K3611-8143-1

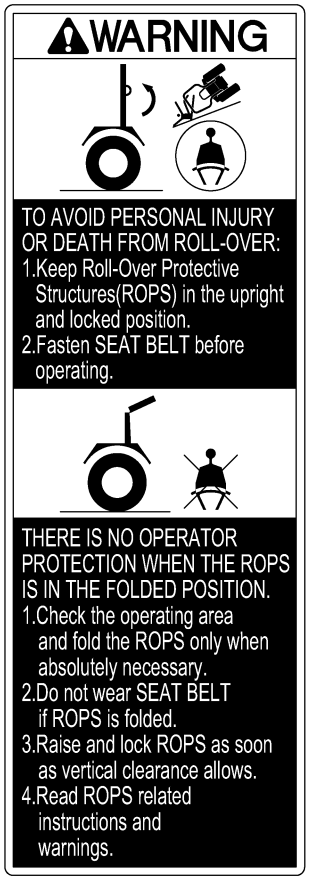

1BDAIAAAP053A
1BDAIAYAP055A

(2) Part No. K3611-8149-1

1BDAIAAAP052A

(3) Part No. K3615-8149-1

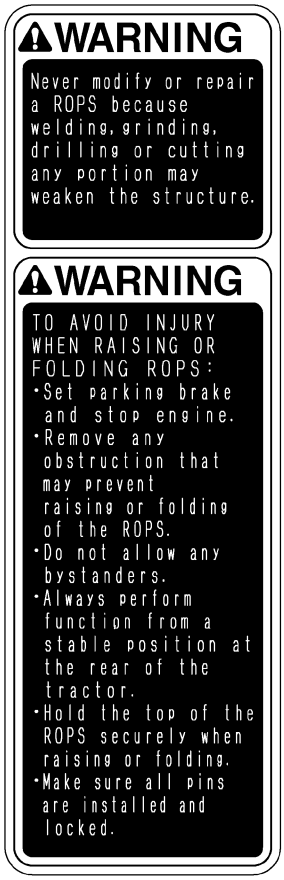

1BDAIAYAP079A

(4) Part No. K3615-8148-1

1BDAIAYAP080A

https://truckmanualshub.com/

[F2690E, F2690, F3990]

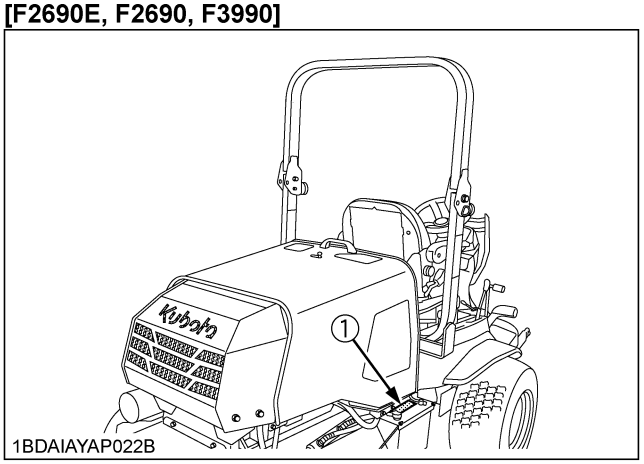

1BDAIAYAP022B

(1) Part No. TD060-3012-3

1AGASABAP108B

TO AVOID INJURY FROM BATTERY GASES AND ACIDES

- Keep away cigarettes, flames or sparks.

- Always shield eyes and face from battery.

- Keep out of reach of children.

- Poison causes severe burns.
- Contains sulfuric acid.

- Read and understand operator's manual.

- Danger explosive gases.

1BDAIAEAP0200

1BDAIAYAP056A

https://truckmanualshub.com/

9. CARE OF DANGER, WARNING AND CAUTION LABELS

1. Keep danger, warning and caution labels clean and free from obstructing material.
2. Clean danger, warning and caution labels with soap and water, dry with soft cloth.
3. Replace damaged or missing danger, warning and caution labels with new labels from your local KUBOTA Dealer.
4. If a component with danger, warning and caution label(s) affixed is replaced with new parts, make sure new label(s) is (are) attached in the same location(s) as the replaced component.
5. Mount new danger, warning and caution labels by applying on a clean dry surface and pressing any bubbles to outside edge.

https://truckmanualshub.com/

https://truckmanualshub.com/

SERVICING OF MACHINE

After reading this manual thoroughly, you will find that you can do some of the regular maintenance yourself. Your dealer is interested in helping you get the best performance from your new machine and wants to help you get the most value from it. When in need of parts or major service, be sure to see your local KUBOTA Dealer. When in need of parts, be prepared to give your dealer the serial number of the machine, ROPS and engine.
Locate the serial numbers now and record them in the space provided.

	Type	Serial No.
Machine		
Engine		
ROPS		
Date of Purchase		
Name of Dealer		
(To be filled in by purchaser)		

[F2690E, F2690]

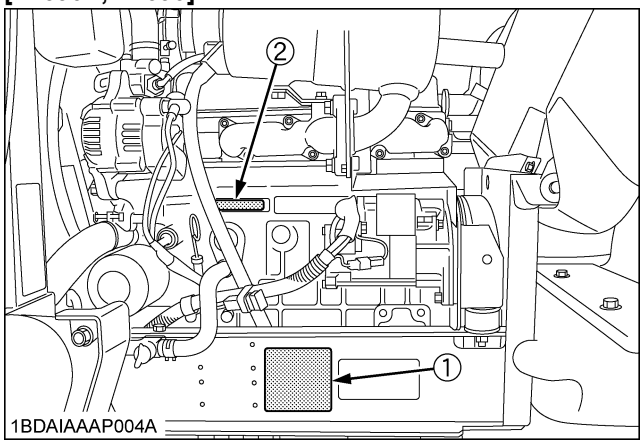

(1) Machine serial No.
(2) Engine serial No.

[F3990]

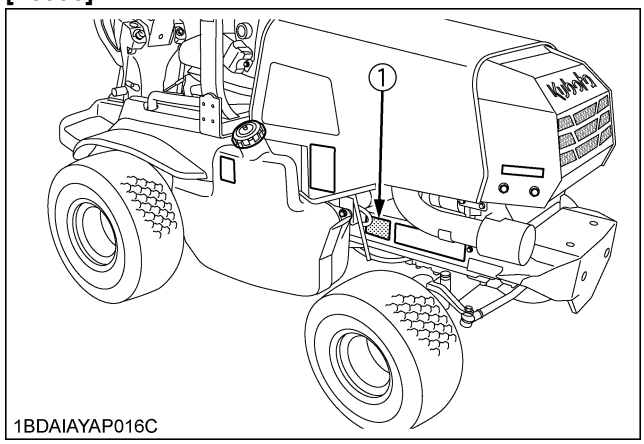

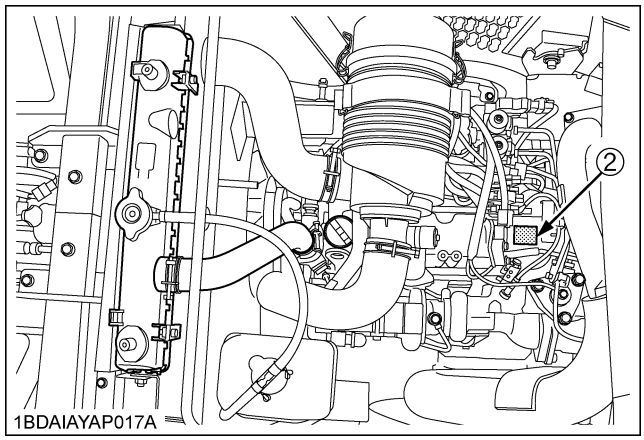

(1) Machine serial No.
(2) Engine serial No.

[F2690E, F2690, F3990]

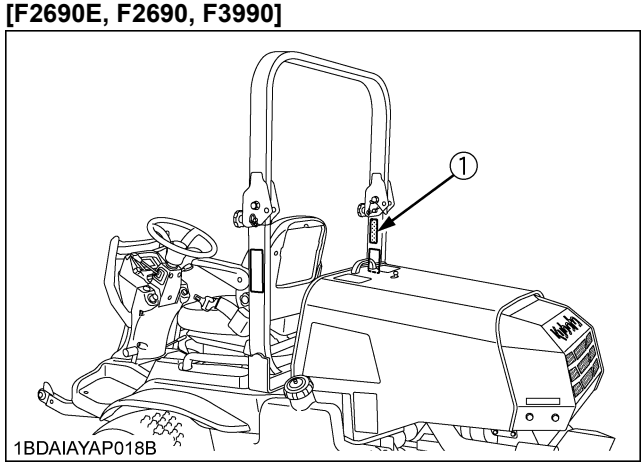

(1) ROPS serial No.

https://truckmanualshub.com/

◆ **Warranty**

This machine is warranted under the Kubota Limited Express warranty, a copy of which may be obtained from your selling dealer. No warranty shall, however, apply if the machine has not been handled according to the instruction given in the Operator's Manual even it is within the warranty period.

◆ **Scrapping the machine and its procedure**

To put the machine out of service, correctly follow the local rules and regulations of the country or territory where you scrap it. If you have questions, consult your local KUBOTA Dealer.

https://truckmanualshub.com/

SPECIFICATIONS

	Model			F2690E	F2690	F3990
Engine	Model			D1105		V1505T
	Engine gross power (SAE) *1		kW (HP)	19 (25.5)		28.9 (39)
	Type			Indirect Injection. Vertical water - cooled, 4cycle diesel		
	Number of cylinders			3		4
	Bore and stroke		mm (in.)	78 x 78.4 (3.07 x 3.09)		
	Total displacement		cm^3 (cu.in.)	1123 (68.53)		1498 (91.41)
	Rated revolution		rpm	3000		[PTO ON] 2500 [PTO OFF] 2700
	Low idling revolution		rpm	1300 to 1400		
	Fuel			Diesel fuel No.1 (S-15) [below -10℃ (14℉)] Diesel fuel No.2 (S-15)		
	Starter			Electric starter with battery, glow plug, 12 V, 1.4 kW		
	Lubrication			Forced lubrication by gear pump		
	Cooling			Liquid with pressurized radiator		
	Battery			12 V, RC: 133 min, CCA: 582 A		
Capacities	Fuel tank		L (U.S.gals.)	61 (16.1)		
	Engine crankcase (with filter) *3		L (U.S.qts.)	3.5 (3.7)		4.7 (5.0)
	Engine coolant		L (U.S.qts.)	4.6 (4.9)		3.7 (3.9)
	Recovery tank		L (U.S.qts.)	0.6 (0.6)		1.1 (1.1)
	Transmission case		L (U.S.qts.)	14 (14.8)		
	Rear axle differential case		L (U.S.qts.)	1.5 (1.6)		
	Rear axle gear case		L (U.S.qts.)	0.5 (0.5)		
Dimensions	Overall length		mm (in.)	2450 (96.5)		2510 (98.9)
	Overall width		mm (in.)	1240 (48.8)	1370 (53.9)	
	Overall height	Without ROPS	mm (in.)	1350 (53.1)		
		With ROPS	mm (in.)	1985 (78.2)		
	Wheelbase		mm (in.)	1300 (51.2)		
	Min. ground clearance		mm (in.)	185 (7.3)		
	Tread	Front	mm (in.)	975 (38.4)	1063 (41.9)	
		Rear	mm (in.)	875 (34.4)	1020 (40.1)	
Weight (W/O mower deck)			kg (lbs.)	756 (1667)	770 (1698)	855 (1885)

https://truckmanualshub.com/

	Model				F2690E	F2690	F3990
Traveling system	Tires	Front			23 x 10.5 - 12 (4PR) Turf	24 x 12 - 12 (4PR) Turf	
		Rear			16 x 6.5 - 8 (4PR) Turf	18 x 9.5 - 8 (4PR) Turf	
	Traveling speeds *2	Forward	Low	mph (km/h)	0 to 5.6 (0 to 9)		
			High	mph (km/h)	0 to 12.5 (0 to 20)		
		Reverse	Low	mph (km/h)	0 to 3.0 (0 to 4.8)		
			High	mph (km/h)	0 to 6.9 (0 to 11)		
	Steering				Power, hydrostatic		
	Transmission				Main - hydrostatic transmission. High - Low gear shift (2 forward, 2 reverse)		
	Brake				Wet disk type		
	Min. turning radius			mm (in.)	≦ 750 (29.5) (Inside of Front Tire)		
	Differential	Front			Bevel gear		
		Rear			-	Bevel gear	
	4WD system				-	Dual - Acting Overrunning 4WD	
PTO	Revolution				1 speed (2545 rpm at 3000 engine rpm)		1 speed (2583 rpm at 2500 engine rpm)
	Drive system				Shaft drive. KUBOTA 10 tooth involute spline (2545 rpm)		Shaft drive. KUBOTA 10 tooth involute spline (2583 rpm)
	Clutch type				Wet multi plates		
	PTO brake				Wet single plate		

(Specifications and design subject to change without notice)

NOTE:

*1 Manufacture's estimate

*2 F2690E, F2690: At 3000 engine rpm
F3990: [PTO ON] At 2500 engine rpm, [PTO OFF] At 2700 engine rpm

*3 Oil amount when the oil level is at the center of the oil level gauge

https://truckmanualshub.com/

IMPLEMENT LIMITATIONS

The KUBOTA Machine has been thoroughly tested for proper performance with implements sold or approved by KUBOTA. Use of implements which exceed the maximum loading weight listed below, or which are not recommended for use with the KUBOTA Machine may result in malfunctions or failures of the machine, damage to other property and injury to the operator or others. (Any malfunctions or failures of the machine resulting from use with improper implements are not covered by the warranty.)

	Maximum loading weight		Lift link end maximum loading weight Wo	Maximum total weight
	Front axle Wf	Rear axle Wr		
F2690E F2690 F3990	900 kg (1984 lbs.)	600 kg (1323 lbs.)	260 kg (573 lbs.)	1500 kg (3307 lbs.)

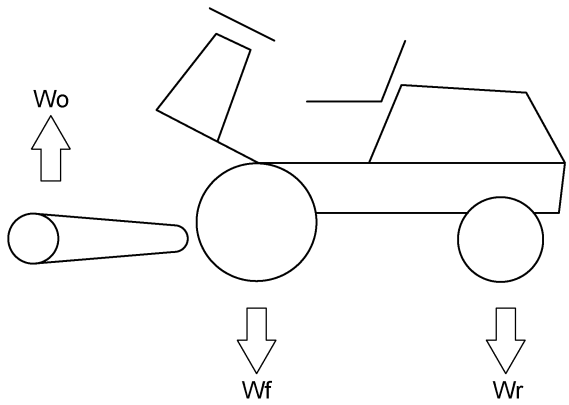

1BDAIAAAP005A

[F3990]

■ IMPORTANT

When you use outlet electric power with a cabin on, do not use with the engine revolution lower than 2000 rpm. Maximum allowance value ≦ 25(A) at engine revolution more than 2000 rpm.

https://truckmanualshub.com/

ENGLISH

INSTRUMENT PANEL AND CONTROLS

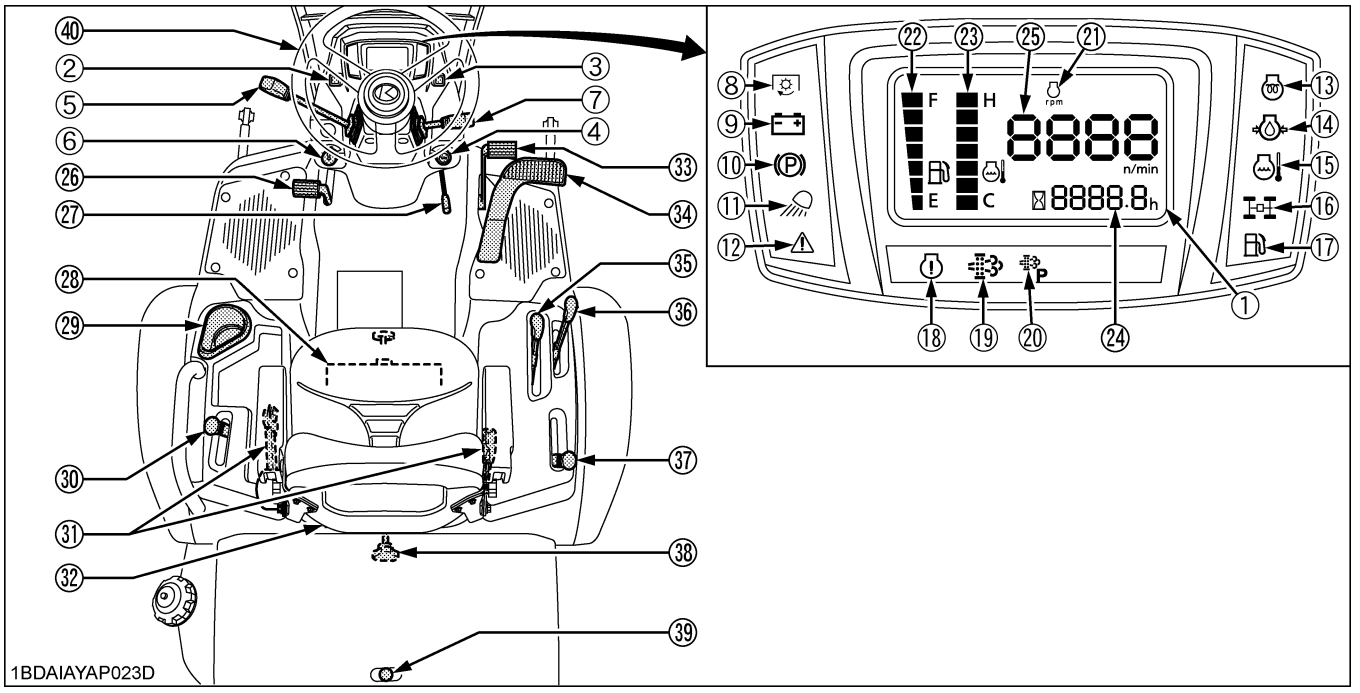

ILLUSTRATED CONTENTS

INSTRUMENT PANEL, SWITCHES and HAND CONTROLS

(1) Liquid crystal display..... 33
(2) Parked regeneration switch [F3990 only]..... 10
(3) DPF INHIBIT switch [F3990 only]..... 10
(4) Key switch..... 20
(5) Throttle lever..... 30
(6) Head light switch..... 27
(7) Steering wheel tilt lever..... 27
(8) PTO clutch indicator..... 18
(9) Electrical charge warning indicator..... 32
(10) Parking brake warning indicator..... 18
(11) Head light indicator..... 27
(12) Master system warning indicator..... 32
(13) Glow plug indicator..... 18
(14) Engine oil pressure warning indicator..... 32
(15) Engine overheat warning indicator..... 32
(16) 4WD indicator..... 29
(17) Fuel level indicator..... 18
(18) Engine warning indicator [F3990 only]..... 10
(19) Regeneration indicator [F3990 only]..... 10
(20) Parked regeneration indicator [F3990 only]..... 10
(21) Constant RPM management indicator [F3990 only].. 35
(22) Fuel gauge..... 33
(23) Coolant temperature gauge..... 34
(24) Hourmeter..... 34
(25) Tachometer..... 34

ILLUSTRATED CONTENTS

CONTROLS

(26) Differential lock pedal..... 31
(27) Parking brake lever..... 18
(28) Globe box..... 26
(29) Cup holder
(30) 4WD lock lever (4WD only)..... 29
(31) Seat belt..... 27
(32) Operator's seat..... 26
(33) Brake pedal..... 30
(34) Speed control pedal (HST pedal)..... 31
(35) High - Low gear shift lever..... 29
(36) Hydraulic lift lever..... 28
(37) PTO lever..... 30
(38) Lift link lowering speed control knob..... 28
(39) Hood lock lever..... 45
(40) Steering wheel

https://truckmanualshub.com/

MOWER MOUNTING

MOUNTING THE MOWER

WARNING

To avoid serious injury:

- **Before mounting the mower deck, read and understand the use of the lift link lowering speed control knob.**
  (See "Lift Link Lowering Speed Control Knob" in "OPERATING THE MACHINE" section in the operator's manual of the machine.)
- **Place the PTO lever in the "DISENGAGE" position.**
- **Place the High-Low gear shift lever in the "NEUTRAL" position.**
- **The mower links (left hand, right hand) are spring-loaded. Have an assistant hold the arm in position when mounting the mower deck.**

1. Move the mower deck under the mower links and place the hydraulic lift lever in the "DOWN" position.
2. Attach the front end of the mower links to the mower deck with clevis pins and set pins.

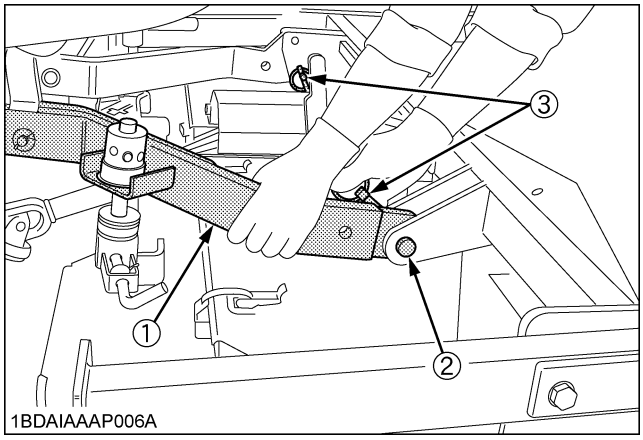

(1) Mower link
(2) Set pin
(3) Clevis pin

3. Start the engine, raise the mower deck, lock the lift link lowering speed control knob and shut off the engine.
4. Install the lift rods to the mower deck with lock pins and lower the mower deck on the ground.

[RCK72P-F39 / RCK72R-F36]

5. Attach the gas spring to the mower link with the clevis pin and the rue ring cotter.

NOTE :

- When operating the mower, make sure the tilt lever is unlocked.
- For tilting up the mower, see "MOWER TILT UP" section in the operator's manual of the mower.

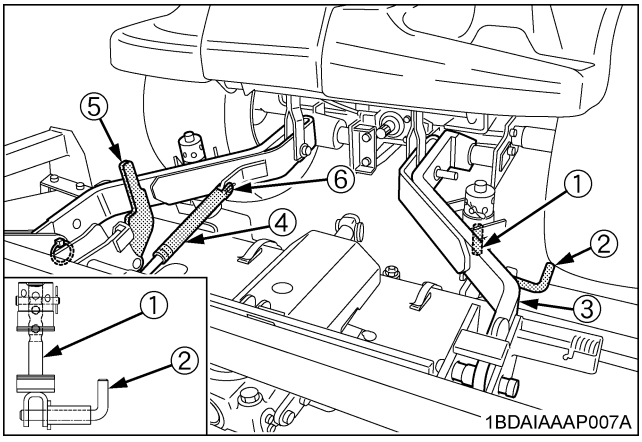

(1) Lift rod
(2) Lock pin
(3) Mower link
(4) Gas spring
(5) Tilt lever ("UNLOCKED" position)
(6) Rue ring cotter

6. Pull back the coupler of the universal joint.
   Push the universal joint onto the PTO shaft until the coupler locks.
   Slide the universal joint backward and forward to check that the universal joint is locked securely.

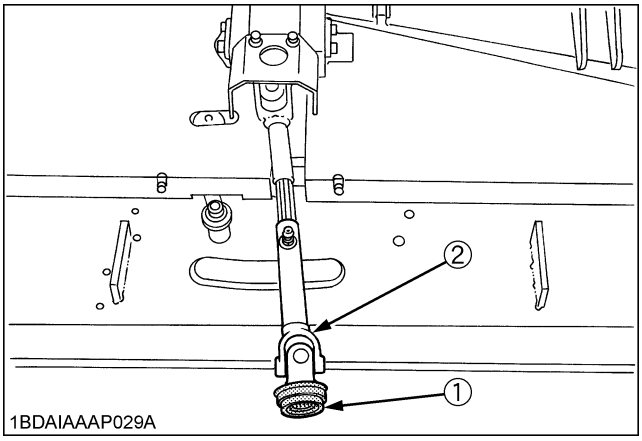

(1) Coupler
(2) Universal joint

IMPORTANT :

- Finally pull the universal joint to see if it is locked tight in position.

After mounting the mower deck, adjust the lift link lowering speed.
(See "CONTROLS" in "INSTRUMENT PANEL AND CONTROLS" section.)

https://truckmanualshub.com/

DISMOUNTING THE MOWER DECK

For dismounting the mower deck, reverse the above procedures.

WARNING

To avoid serious injury:

- **The mower links (left hand, right hand) are spring-loaded. Have an assistant hold the arm in position when mounting the mower deck.**

MOWER TILT UP

WARNING

To avoid serious injury:

- **Do not start the engine while tilting the mower deck.**

WARNING

To avoid serious injury:

- **Be sure to tilt the mower on a level surface and the parking brake ON.**
- **Place the PTO lever in the "DISENGAGE" position.**
- **Place the High-Low gear shift lever in the "NEUTRAL" position.**

■How To Tilt Up

For detailed procedure, refer to the mower operator's manual.

■How To Mount Another Implement

For detailed procedure, refer to the implement instruction manual.

https://truckmanualshub.com/

PRE-OPERATION CHECK

DAILY CHECK

To prevent trouble from occurring, it is important to know the condition of the machine well. Check it before starting.

WARNING

To avoid serious injury:

- **Be sure to check and service the machine on a level surface with the engine shut off and the parking brake "ON" and implement lowered to the ground.**

Check item

- Walk around inspection
- Check engine oil level
- Check transmission oil level
- Check coolant level
- Clean air conditioner condenser screen
- Clean grill and radiator screen
- Check DPF muffler [F3990 only]
- Check air cleaner evacuator valve
  (When used in a dusty place)
- Check brake pedal
- Check indicators, gauges and meter
- Check lights
- Check wire harness
- Check seat belt
- Check movable parts
- Refuel
  (See "DAILY CHECK" in "PERIODIC SERVICE" section.)
- Care of danger, warning and caution labels
  (See "DANGER, WARNING AND CAUTION LABELS" in "SAFE OPERATION" section.)

https://truckmanualshub.com/

OPERATING THE ENGINE

WARNING

To avoid serious injury:

- **Read and understand "SAFE OPERATION" in the front of this manual.**
- **Read and understand the danger, warning and caution labels located on the machine.**
- **To avoid danger of exhaust fume poisoning, do not operate the engine in a closed building without proper ventilation.**
- **Never start the engine while standing on the ground. Start the engine only from the operator's seat.**
- **Make it a rule to set all shift levers to the "NEUTRAL" positions and to place the PTO lever in "OFF" position before starting the engine.**

IMPORTANT :

- Do not use starting fluid or ether.
- To protect the battery and the starter, make sure that the starter is not continuously turned for more than 30 seconds.

EXHAUST AFTERTREATMENT DEVICES

[F3990 only]

WARNING

To avoid serious injury:

- **During Diesel Particulate Filter (DPF) regenerating operations, exhaust gases and exhaust filter components reach temperatures hot enough to burn people, or ignite or melt common materials.**
- **Keep machine away from people, animals or structures which may be susceptible to harm or damage from hot exhaust gases.**
- **During regeneration, white exhaust gases may be visible. Do not allow regeneration in a non ventilated garage or confined area.**
- **During regeneration, do not leave the machine.**

■Diesel Oxidation Catalyst and Diesel Particulate Filter (DPF) Muffler

The Diesel Oxidation Catalyst and Diesel Particular Filter (Hereinafter called DPF) serves to reduce hydrocarbons, carbon monoxide and other toxic gases, all of which are contained in diesel engine emissions, to harmless carbon dioxide and water. The DPF also traps Particulate Matter (PM).

To meet the emission regulations in your country, the DPF is installed on your machine.

Be sure to read this operator's manual before running in your machine.

It is imperative for the machine owner and operator to handle the DPF in a safe and environmentally responsible manner.

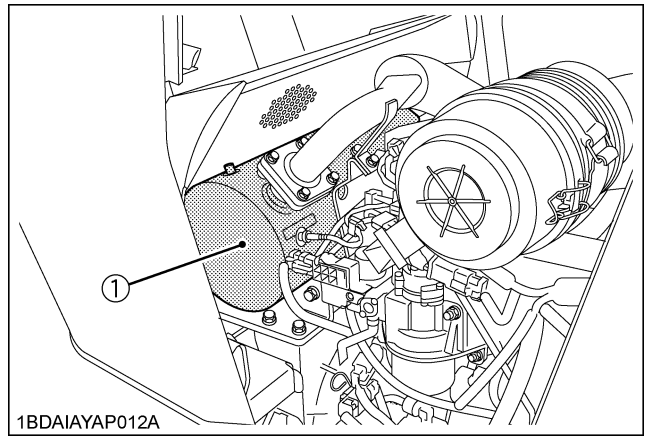

(1) Diesel Particulate Filter (DPF)

NOTE :

- When the DPF has trapped a specific amount of particulate matter (PM), the engine computer starts the process of regeneration or burning of soot collected by the filter.
  This burning process is called regeneration.

https://truckmanualshub.com/

■Handling Points

When a specific amount of PM (particulate matter) has accumulated in the DPF muffler, it is necessary to refresh the DPF muffler by burning the PM inside it. This burning off work is called "Regeneration".
To extend operating time to reach this regeneration, and to avoid DPF muffler trouble, make sure to observe the following handling matters.

◆ **Fuel**
Be sure to use Ultra Low Sulfur Fuel (S15).

IMPORTANT :
- Use of diesel fuel other than Ultra Low Sulfur Fuel may adversely affect the engine and DPF performance.
  Use of fuels other than Ultra Low Sulfur Fuel (S15) may not meet regulations for your region.

◆ **Engine oil**
Use DPF-compatible oil (CJ-4) for the engine.

IMPORTANT :
- If any engine oil other than CJ-4 is used, the DPF may become clogged earlier than expected and the fuel economy may drop.

◆ **Prohibition of unnecessary short-time operation**
At a start of the engine, much PM is generated. Avoid running the machine (turning on and off the engine) for a short period of time whenever possible. Otherwise, the PM gets easily accumulated.

◆ **Regeneration**
When there is "Regeneration" instruction sign by lamp or buzzer, immediately perform the required procedure for regeneration.

IMPORTANT :
- Interrupting the regeneration cycle or continued operation by ignoring the warning signs may cause DPF and engine damage.
- Operation with a clogged air cleaner can cause a regeneration failure and DPF damage.

■DPF Regeneration Process

DPF regeneration process can be performed by choosing from "Auto Regeneration" or "Regeneration inhibit" mode according to your job conditions. For jobs not affected by hot gases emitted during regeneration, the "Auto Regeneration" is advisable.

◆ **Auto Regeneration Mode;**
When starting the engine (switch operation is unnecessary), the "Auto Regeneration" mode is automatically activated.
With the auto regeneration mode on, when a specific amount of PM has accumulated, and the regeneration conditions are satisfied (See the "Tips on Diesel Particulate Filter [DPF] Regeneration"), the DPF will be automatically regenerated whether the machine is in motion or parked.
By this way, work efficiency is improved. For details of auto regeneration, refer to "Operating Procedure for Auto Regeneration Mode" section.

◆ **Regeneration Inhibit Mode;**
After starting the engine, if the "DPF INHIBIT switch" is pressed to turn on the switch lamp, the "Regeneration inhibit" mode will be activated.
With "Regeneration Inhibit" mode on, the PM which has accumulated inside the DPF will not be burnt, unless the operator performs the regeneration work manually.
The "Regeneration Inhibit" mode is effective for work in poorly ventilated work spaces.
For details of regeneration prohibition, refer to "Operating Procedure for Regeneration Inhibit Mode" section.

NOTE :
- If you stop the engine once, the "Auto Regeneration" mode will be activated.

https://truckmanualshub.com/

Operating Procedure for Auto Regeneration Mode

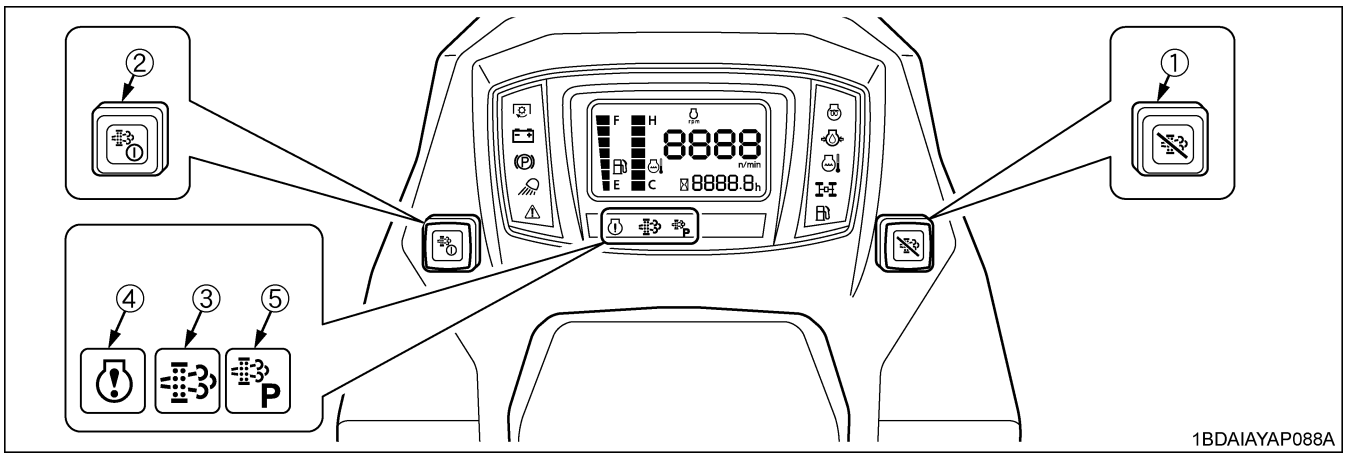

(1) DPF INHIBIT switch
(2) Parked regeneration switch
(3) Regeneration indicator
(4) Engine warning indicator
(5) Parked regeneration indicator

■Auto Regeneration Operating Procedure

1. Start the engine.
   (Make sure that the DPF INHIBIT switch lamp is "OFF".)

   Switch lamp OFF: Auto Regeneration Mode activated.
   Switch lamp ON: Regeneration Inhibit Mode activated.

   NOTE :
   - When the engine is started, the "Auto Regeneration" mode is automatically activated.
   - "Regeneration Inhibit" mode is activated, when the DPF INHIBIT switch is pushed after the engine is started.

2.
   When a specific amount of PM has built up in the DPF, the regeneration indicator turns "ON".
   Continue to operate the machine, and the regeneration process will begin automatically, make sure you are working in a safe area as DPF and exhaust temperature will rise.
   When the regeneration cycle has completed, the regeneration indicator turns "OFF".

   IMPORTANT:
   - When ambient temperature is so low or when working with such extraordinary use of electricity that the regeneration conditions are not satisfied, the regeneration indicator starts flashing.

     If the regeneration indicator turns "ON" for a while and then starts flashing, keep on working and rev up the engine to the maximum rpm so that the regeneration indicator stops flashing and remains "ON".

https://truckmanualshub.com/

■PM Warning Level and Required Procedures

During Auto Regeneration Mode when the PM level has built up in the DPF, the regeneration cycle will begin automatically. If the regeneration cycle is interrupted or the regeneration conditions are not satisfied, the buzzer starts sounding and the indicator display changes in response to the PM level in order to prompt the operator to perform the required procedure listed below.

IMPORTANT :

- Once PM warning level has been reached, immediately perform the required procedure for regeneration. Interrupting the regeneration cycle or continued operation by ignoring the warning signs may cause DPF and engine damage.
- If the regeneration cycle is interrupted several times, parked regeneration will be required.

Auto Mode		
DPF system status		Required procedure
PM warning level: 1 Buzzer: Not sounding	The regeneration indicator turns "ON".	A specific amount of PM has accumulated in the DPF muffler. Continue to work the machine to raise the DPF temperature. The regeneration cycle begins until cycle is complete then the indicator will turn "OFF".
PM warning level: 2-1 Buzzer: Sounding every 5 seconds	If the regeneration cycle was interrupted or conditions are not satisfied for regeneration then DPF system in now in level 2:	
	The regeneration indicator turns "ON".	Start the regeneration, referring to "PM warning level: 1" above. Now the parked regeneration indicator starts flashing, and the parked regeneration can also be started. If the regeneration conditions are not met, perform the parked regeneration. ● For the procedure, refer to "Operating Procedure for Parked Regeneration".
PM warning level: 2-2 Buzzer: Sounding every 3 seconds		
PM warning level: 3 Buzzer: Sounding every 1 second Engine output: 50%	If the regeneration fails in the warning level 2:	
	The Engine warning indicator starts flashing. The parked regeneration indicator starts flashing.	Immediately discontinue working the machine and begin the parked regeneration cycle process. ● For the procedure, refer to "Operating Procedure for Parked Regeneration". At this PM warning level, the Auto Regeneration Mode does not function. If the machine is operated further, the regeneration cycle will be disabled.
PM warning level: 4 Buzzer: Sounding every 1 second Engine output: 50%	If the parked regeneration is interrupted or the machine is continuously operated in the warning level 3:	
	The Engine warning indicator remains constantly "ON".	Immediately move the machine to a safe place and park it there and turn the engine "OFF". Contact your local KUBOTA Dealer. ● At this level, never continue to operate the machine, otherwise damage may result to the DPF and engine.

https://truckmanualshub.com/

IMPORTANT:

- When the regeneration interval becomes shorter, parked regeneration will be required as followed.

1. If it takes shorter than 4 hours or so for the regeneration indicator to go out and light up again.
2. Parked regeneration indicator starts flashing.
   ∗ Buzzer: Sounding every 5 seconds.
3. Immediately discontinue working the machine and begin the parked regeneration cycle process.
   ∗ For the procedure, refer to "Operating Procedure for Parked Regeneration".

Operating Procedure for Regeneration Inhibit Mode

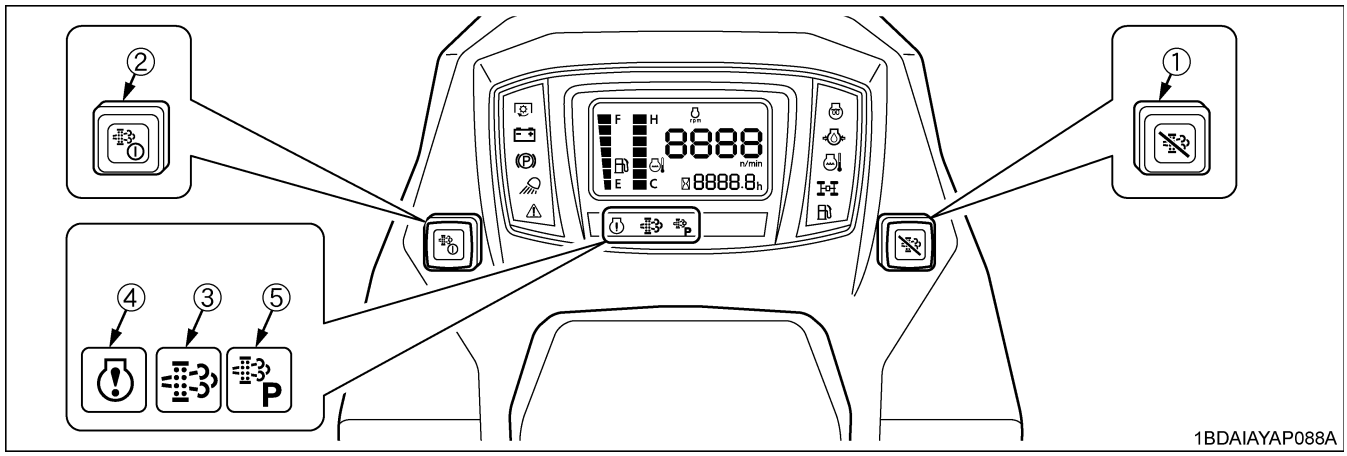

(1) DPF INHIBIT switch
(2) Parked regeneration switch
(3) Regeneration indicator
(4) Engine warning indicator
(5) Parked regeneration indicator

■Regeneration Inhibit Mode Operating Procedure

1. Start the engine.
2. Press the DPF INHIBIT switch , and the switch lamp illuminates.

   Switch lamp ON: Regeneration Inhibit Mode selected.
   Switch lamp OFF: Auto Regeneration Mode selected.

3. When the parked regeneration indicator starts flashing:

   A specific amount of PM has accumulated in the DPF muffler.
   Move the machine to a safe place and activates the DPF muffler. Follow the "Operating Procedure for Parked Regeneration" procedure.

https://truckmanualshub.com/

■PM Warning Level and Required Procedures

In the Regeneration Inhibit Mode, the buzzer starts sounding and the indicator display changes in response to the PM level in order to prompt the operator to perform the required procedure listed below.

IMPORTANT :

- Once PM warning level has been reached, immediately perform the required procedure for regeneration. Interrupting the regeneration cycle or continued operation by ignoring the warning signs may cause DPF and engine damage.

Regeneration Inhibit Mode		
DPF system status		Required procedure
PM warning level: 1 Buzzer: Not sounding	The regeneration indicator starts flashing.	A specific level of PM has built up in the DPF muffler. Continue with the operation as it is.
	At PM warning levels range from 1 to 2-2, it is also possible to change DPF INHIBIT switch to auto regeneration mode then perform regeneration.	
PM warning level: 2-1 Buzzer: Sounding every 5 seconds	The regeneration indicator starts flashing.	Move the machine to a safe area, then follow the "Operating Procedure for Parked Regeneration".
PM warning level: 2-2 Buzzer: Sounding every 3 seconds	The Parked regeneration indicator starts flashing.	
PM warning level: 3 Buzzer: Sounding every 1 second Engine output: 50%	If the parked regeneration cycle is interrupted or the machine is continuously operated in the PM warning level 2:	
	The Engine warning indicator starts flashing. The parked regeneration indicator starts flashing.	Immediately stop working the machine, move the machine to a safe area, then follow the "Operating Procedure for Parked Regeneration". If the machine is operated further and the operator ignores the warning signs, then regeneration will be disabled.
PM warning level: 4 Buzzer: Sounding every 1 second Engine output: 50%	If the regeneration cycle is interrupted or the machine is continuously operated ignoring the warning signs, in the PM warning level 3:	
	The Engine warning indicator remains constantly "ON".	Immediately move the machine to a safe place and park it there and turn the engine "OFF". Contact your local KUBOTA Dealer. ● At this level, never continue to operate the machine, otherwise damage may result to the DPF and engine.

https://truckmanualshub.com/

IMPORTANT:

- When the regeneration interval becomes shorter, parked regeneration will be required as followed.

1. If it takes shorter than 4 hours or so for the regeneration indicator to go out and light up again.

2. Parked regeneration indicator starts flashing.
   ∗ Buzzer: Sounding every 5 seconds.

3. Immediately discontinue working the machine and begin the parked regeneration cycle process.
   ∗ For the procedure, refer to "Operating Procedure for Parked Regeneration".

Operating Procedure for Parked Regeneration

1. Park the machine in a safe area away from buildings, people, and animals.
2. Set the speed control pedal to "NEUTRAL" position.
3. Set the parking brake.
4. Set the PTO lever to "OFF" position.
5. Lower the implement to the ground.
6. Turn steering wheel so front wheels are in the straight ahead position.
7. Return the engine rpm to the idle speed.
8. Press the DPF INHIBIT switch , and the switch lamp turns "OFF".
9. When the regeneration conditions are satisfied (from 2 to 4 and 7, 8), the parked regeneration switch lamp 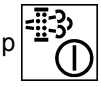 start flashing.
10. Press the parked regeneration switch 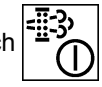 to start the regeneration cycle.
    (The switch lamp will stop flashing and remain "ON" constantly during the cycle.)
11. The engine rpm will automatically rise, and the regeneration process will begin.

NOTE :
- For a while after the start of regeneration, the engine runs at high speed for warming it up and regeneration of electricity.

12. Both indicators stay "ON" while regenerating the DPF.
    They turn "OFF" when the cycle is complete.
13. After the lamp turns "OFF", normal machine work may resume.
    When driving in "Regeneration Inhibit" mode, press the DPF INHIBIT switch to turn on the switch lamp.

NOTE :
- During the regeneration cycle, do not touch the above levers, and switches (in steps 2, 3, 4), nor change the engine rpm other than an emergency stop. Otherwise, the regeneration will be interrupted.
- Never leave the machine when parked regeneration process is activated.
- If the parked regeneration cycle is interrupted, the engine rpm is fixed at the idling level for about 30 seconds. For this period, keep the hand throttle lever at the idle position. Do not move it. It will function again in 30 seconds.

https://truckmanualshub.com/

■Tips on DPF Regeneration

- **Necessary conditions for "Regeneration"**
  If even one condition is deviated, after starting regeneration, the regeneration will be interrupted.
  (1) The engine coolant temperature
  (2) The DPF temperature
  (3) The battery voltage during regeneration

- Usually it takes 25-35 minutes to complete the regeneration cycle.
  Actual regeneration time may depend on ambient temperature, exhaust temperature and engine speed.

- It is recommended to do the regenerating while the engine is warm and at high revolution.

- Do not unnecessarily start and interrupt the regeneration process. Otherwise, a small amount of fuel becomes smoke.

- Just after the regeneration has ended, the DPF muffler remains hot. It is advisable to keep the engine running for about 5 minutes to allow cooling of the exhaust components.

- During the regeneration, make sure the fuel gauge lamp stays on.

- When the engine warning indicator turns "ON" frequently in regeneration, consult your local KUBOTA Dealer.

■Handling at low temperature

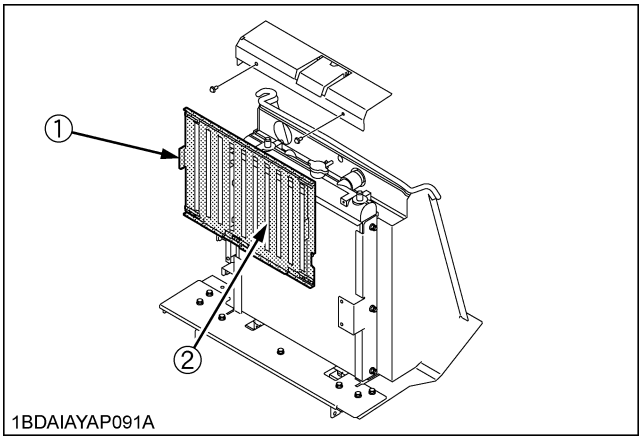

(1) Shutter plate
(2) Vent

(1) In case of operating machine in winter freezing condition, shutter plate to prevent over-cooling must be equipped. (Shutter plate is standard for Canada)
Please observe the following points regarding opening and closing of the shutter
a. Close vent ONLY during Winter use and keep it opened for other seasons.
b. If the shutter is left closed in warm conditions, the coolant temperature will increase and the overheat alarm will sound. Be sure to check the shutter has been opened.

(2) In case of use below -4℉ (-20℃) ambient temperature, please be sure to observe the following points for reliable activation of DPF system:
a. Complete the mandatory daily checks, paying special attention to ensure the air cleaner element is clean and free of dust or obstruction
b. Warm up with low idling for 10 to 15 minutes.
c. While operating, use the machine at FULL throttle.
d. When stopping the machine, ensure you park on a level surface to prevent water (that may turn to ice) accumulating in air hoses

(3) It is not recommended to operate the unit below -31℉ (-35℃) ambient temperature.

https://truckmanualshub.com/

ENGLISH

STARTING THE ENGINE

1. Sit on the operator's seat.

2. Apply the parking brake.

To apply the parking brake:
Depress the brake pedal firmly and hold in position. Pull and hold the parking brake lever, and release the brake pedal.

To release the parking brake:
Depress the brake pedal and release slowly.

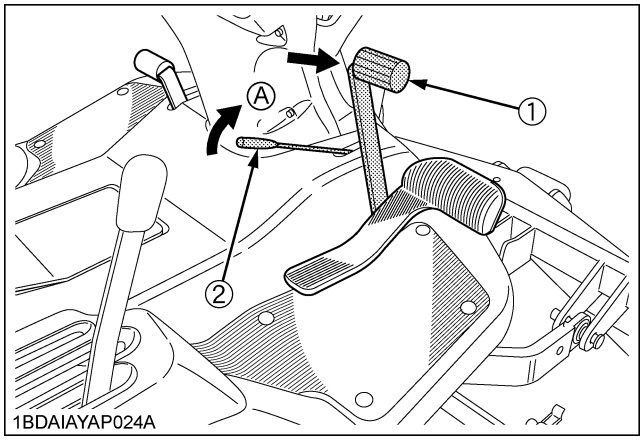

(1) Brake pedal
(2) Parking brake lever
(A) "PARKING"

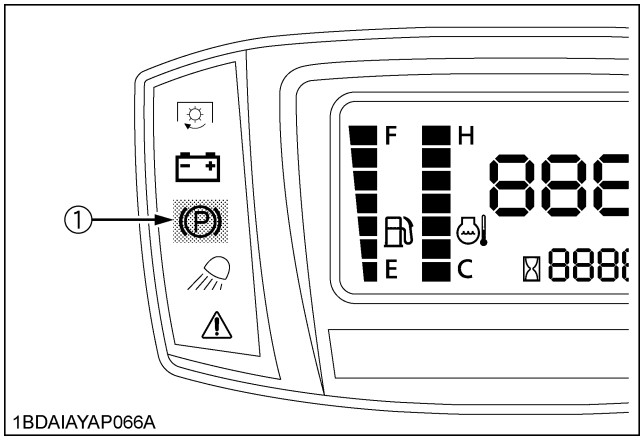

(1) Parking brake warning indicator

NOTE :
- It is recommended that the operator practice engaging and disengaging the parking brake on a flat surface without the engine running before operating the machine for the first time.

3. Make sure that the PTO lever is in the "DISENGAGED" position.

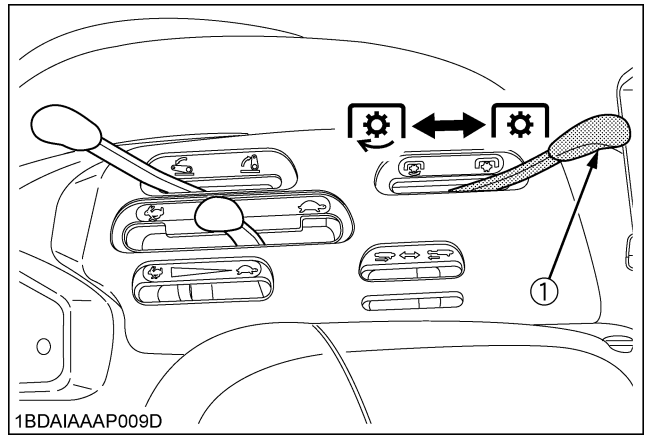

(1) PTO lever
: "ENGAGED"
: "DISENGAGED"

4. Make sure that the speed control pedal is in the "NEUTRAL" position.

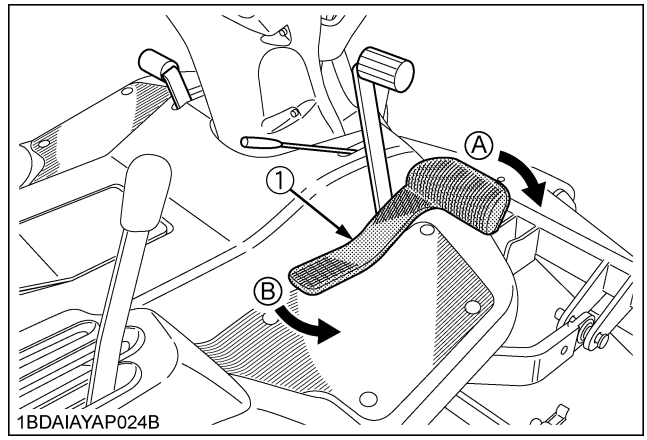

(1) Speed control pedal
(A) "FORWARD"
(B) "REVERSE"

https://truckmanualshub.com/

5. Make sure that the hydraulic lift lever is in the "NEUTRAL" position.

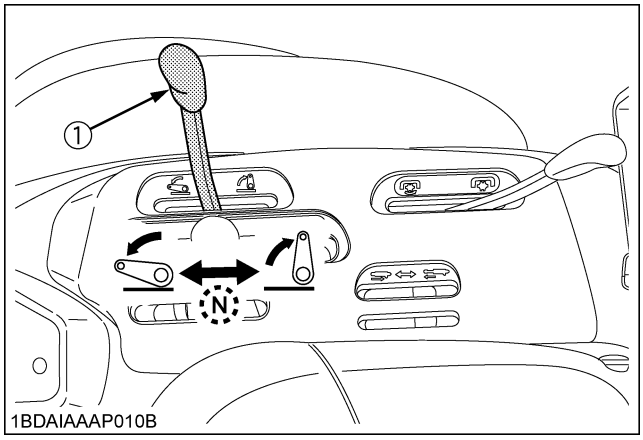

(1) Hydraulic lift lever

: "DOWN"
: "NEUTRAL"
: "UP"

6. Set the throttle lever 1/2 way forward.

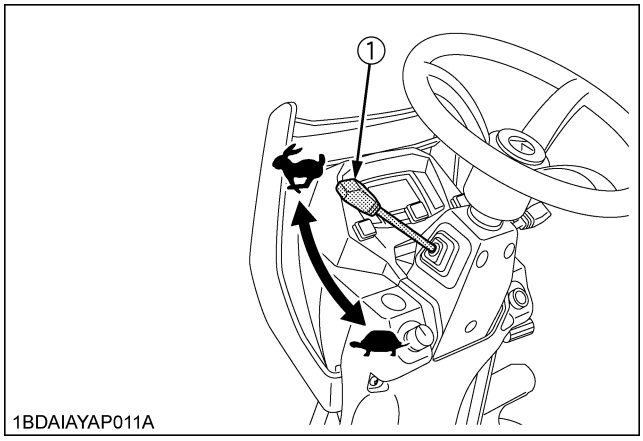

(1) Throttle lever

: "FAST"
: "SLOW"

7. Insert the key into the key switch and turn clockwise 1 notch.
Make sure the easy checker lights are "ON".

◆ **Check Easy Checker(TM) Lamps:**

1. When the key is turned "ON", lamps (3) (4) should come on. If trouble should occur at any location while the engine is running, the indicator lamp corresponding to problem will turn "ON".
2. Suppose that the engine coolant temperature is not high enough yet. The glow plug indicator (4) also turns "ON" when the key is turned "ON" to preheat the engine and goes off automatically when preheat is completed.
   Illumination time of indicator varies according to the temperature of coolant.
3. The PTO clutch indicator (1) comes on while PTO lever is engaged "ON" and goes off when disengaged.
4. If the fuel level indicator (5) lights up, when fuel level is very low, therefore add fuel and the light will turn "OFF".
5. If the parking brake warning indicator (6) does not illuminate, make sure the parking brake is set.

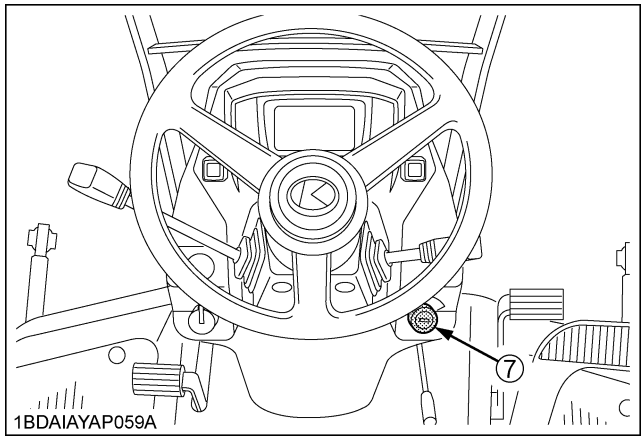

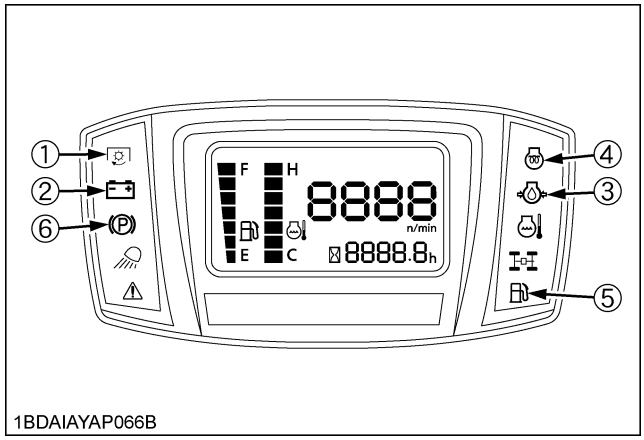

(1) PTO clutch indicator
(2) Electrical charge warning indicator
(3) Engine oil pressure warning indicator
(4) Glow plug indicator
(5) Fuel level indicator
(6) Parking brake warning indicator
(7) Key switch

https://truckmanualshub.com/

NOTE :
- Some of the Easy Checker(TM) lamps may illuminate or start flashing depending on the positions of the levers and switches.

IMPORTANT :
- Daily checks with the Easy Checker(TM) only, are not sufficient. Never fail to conduct daily checks carefully by referring to Daily Check. (See "DAILY CHECK" in "PERIODIC SERVICE" section.)

■Key Switch

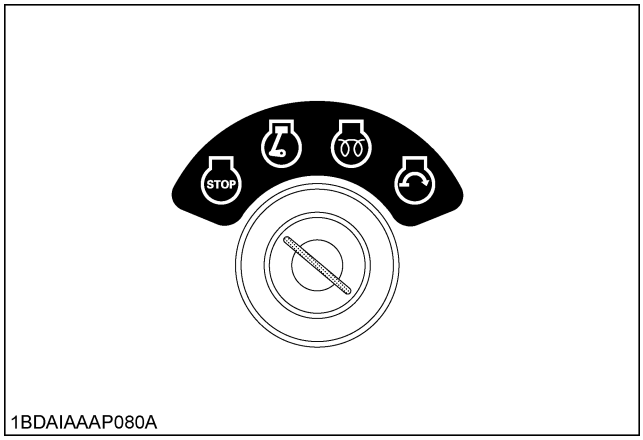

: "OFF" (Engine - Stop) *: "PREHEAT" (Preheat)*
: "ON" (Engine - Run) *: "START" (Engine - Start)*

IMPORTANT :
- Do not turn the key switch to the "START" position while the engine is running.
- When the temperature is below 0℃ (32℉), run the engine at medium speed to warm up the lubricant of the engine and the transmission for at least 10 minutes. If the machine is operated before the lubricant is warm enough, the machine life will be shortened.
- Do not operate the machine under full load until it is sufficiently warmed.
- Do not use starting fluid or ether.
- When the ambient temperature is less than -15℃ (5℉), remove the battery from the machine and store it somewhere warm until the next operation.

8. Turn the key switch to the "PREHEAT" position clockwise, and hold it for about 5 seconds.
For the appropriate preheating time, refer to the table below:

Temperature	Preheating Time
Over 0℃ (32℉)	5 sec.
Below 0℃ (32℉)	10 sec.

9. Turn the key switch to the "START" position and release the key to the "ON" position when the engine starts.

IMPORTANT :
- Because of the safety devices, the engine may not be started except when the PTO clutch is disengaged, the brake pedal is fully depressed and the operator sits in the seat.

■Cold Weather Starting

When the ambient temperature is below -5℃ (23℉) and the engine is very cold. (If the engine fails to start after 10 seconds, turn off the key for 30 seconds. Then repeat steps 8 and 9. To protect the battery and the starter, make sure that the starter is not continuously turned for more than 30 seconds.)

■Block Heater (Option)

A block heater is available as an option from your local dealer. It will assist you in starting your machine when the ambient temperature is below -15℃ (5℉).

10. Check to see that all the lamps on the Easy Checker(TM) are "OFF".

If the lamp is still on, immediately stop the engine and determine the cause.

11. Warm the engine by running at medium speed.

https://truckmanualshub.com/

STOPPING THE ENGINE

1. Set the parking brake.
2. After slowing the engine to idle, turn the key switch to the "OFF" position.
3. Remove the key.
4. Do not leave the key switch "ON" (key in the "ON" position) as the battery will discharge when the engine is not running.

WARMING UP

WARNING

To avoid serious injury:

- **Be sure to apply the parking brake during warm-up.**

For 5 minutes after engine start-up, allow engine to warm up without applying any load. This is to allow oil to reach every part of the engine. If load should be applied to the engine without this warm-up period, problems may develop such as seizure, breakage or premature wear.

■Warm-up and Transmission Oil in the Low Temperature Range

Hydraulic oil serves as transmission oil and power steering fluid. In cold weather, the oil may be cold with increased viscosity. This can cause delayed oil circulation or abnormally low hydraulic pressure for some time after engine start-up. This in turn creates problems with the hydraulic system or may damage the hydraulic clutch.
To prevent the above, observe the following instructions:
Warm up the engine at about 50% of rated rpm according to the table below:

Atmospheric temperature	Warm-up time requirement Higher
Higher than 0℃ (32℉)	Approx. 5 minutes
-10 to 0℃ (14 to 32℉)	5 to 10 minutes
-20 to -10℃ (-4 to 14℉)	10 to 15 minutes
Below -20℃ (-4℉)	More than 15 minutes

IMPORTANT :

- Do not operate unless the engine is well warmed up. If operation is attempted while the engine is still cold, the hydraulic mechanism will not function properly and its service life will be shortened.
- If noises are heard after the hydraulic control lever has been activated and the implement is lifting, the hydraulic mechanism is not adjusted properly. Unless corrected, the unit will be damaged. Contact your local KUBOTA Dealer for adjustment.

■Engine Stop Lever and Fuel Valve (Inside the Hood)

The engine stops when the key switch is turned "OFF". If the engine does not stop, make sure the speed control pedal is in the "NEUTRAL" position, the PTO lever is "OFF", the mower lowered to the ground and apply the parking brake, then carefully get off the machine. Then for F2690E, F2690 open the hood and pull engine stop lever (Red mark) and hold it until the engine stops. For F3990, close the fuel valve, and wait for the engine to stop away from the machine a few minutes until the fuel of the hose is used up. Then contact your local KUBOTA Dealer immediately.

WARNING

To avoid serious injury:

- **Do not operate the machine until the engine stop system is repaired.**

[F2690E, F2690]

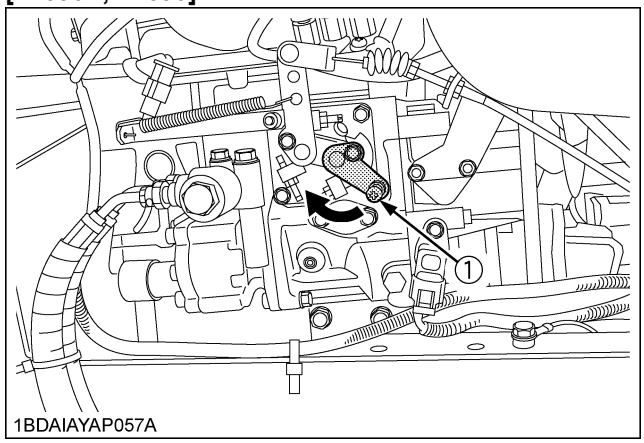

(1) Engine stop lever

[F3990]

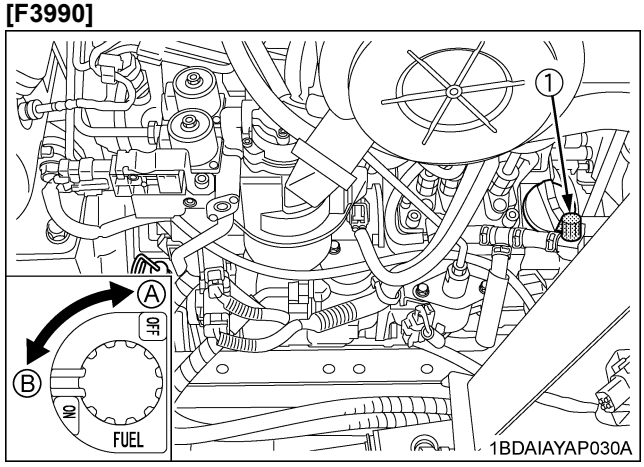

(1) Fuel valve

(A) "OFF" (STOP, CLOSE)
(B) "ON" (RUN, OPEN)

https://truckmanualshub.com/

JUMP STARTING

WARNING

To avoid serious injury:

- **Keep cigarettes, sparks, and flames away from battery.**
- **If machine battery is frozen, do not jump start engine.**
- **Do not connect other end of negative (-) jumper cable to negative (-) terminal of machine battery.**

When jump starting the engine, follow the instructions below to safely start the engine.

1. Bring helper vehicle with a battery of the same voltage as the disabled machine within easy cable reach. "THE VEHICLES MUST NOT TOUCH".
2. Apply the parking brakes of both vehicles and put the shift levers in neutral. Shut the engine off.
3. Put on safety goggles and rubber gloves.
4. Ensure the vent caps are securely in place. (if equipped)
5. Attach the red clamp to the positive (red, (+) or pos.) terminal of the dead battery and clamp the other end of the same cable to the positive (red, (+) or pos.) terminal of the helper battery.
6. Clamp the other cable to the negative (black, (-) or neg.) terminal of the helper battery.
7. Clamp the other end to the engine block or frame of the disabled machine as far from the dead battery as possible.
8. Start the helper vehicle and let its engine run for a few moments. Start the disabled machine.
9. Disconnect the jumper cables in the exact reverse order of attachment. (Steps 7, 6 and 5).

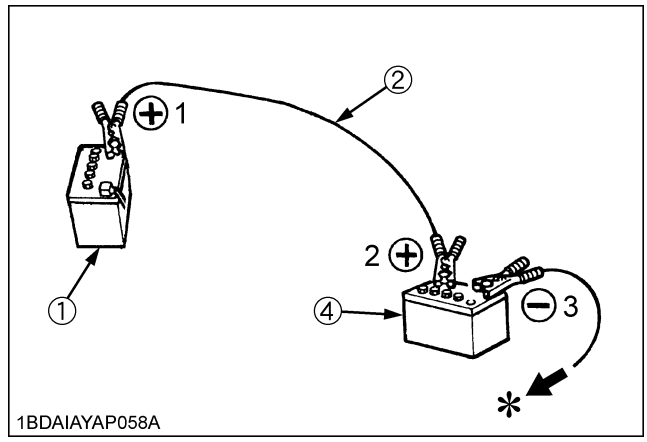

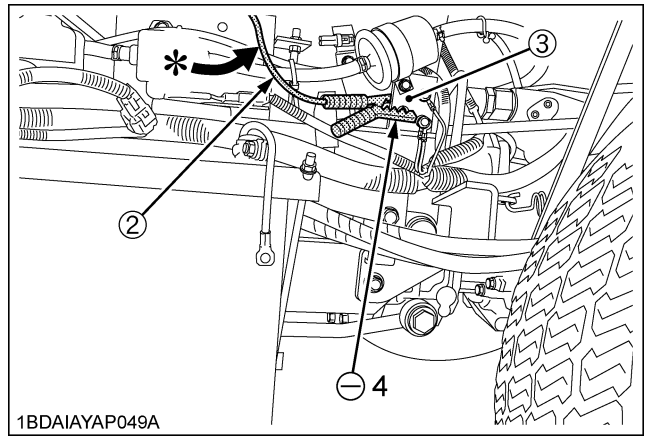

(1) Dead battery
(2) Jumper cables
(3) Frame
(4) Helper battery

Connect cables in numerical order.
Disconnect in reverse order after use.

IMPORTANT :

- This machine has a 12 volt negative (-) ground starting system.
- Use only same voltage for jump starting.
- Use of a higher voltage source on machine could result in severe damage to machine electrical system. Use only matching voltage source when "Jump starting" a low or dead battery condition.

https://truckmanualshub.com/

OPERATING THE MACHINE

OPERATING NEW MACHINE

How a new machine is operated and maintained will determine the life of the machine.

A new machine just off the factory production line has been tested, but the various parts are not accustomed to each other, so care should be taken to operate the machine for the first 50 hours at a slower speed and avoid excessive work or operation until the various parts become "broken-in." The manner in which the machine is handled during the "breaking-in" period greatly affects the life of your machine. Therefore, to obtain the maximum performance and the longest life of the machine, it is very important to properly break-in your machine. In handling a new machine, the following precautions should be observed.

■Changing Lubricating Oil for New Machines

The lubricating oil is especially important in the case of a new machine. The various parts are not "broken-in" and are not accustomed to each other; small metal grit may develop during the operation of the machine; and this may wear out or damage the parts. Therefore, care should be taken to change the lubricating oil a little earlier than would ordinarily be required.

For further details of change interval hours, see "SERVICE INTERVALS" in "MAINTENANCE" section.

■Engine Break-in

After the first 50 hours of operation, change the engine oil and filter. (See "EVERY 200 HOURS" in "PERIODIC SERVICE" section.)

■Machine Break-in

After the first 400 hours of operation, change the transmission fluid.

After the first 50 hours of operation, change the oil filter cartridge. (See "EVERY 400 HOURS" in "PERIODIC SERVICE" section.)

WARNING

To avoid serious injury:

- **Do not allow any person other than the driver to ride on the machine.**
- **Do not drive the machine close to the edges of ditches or banks which may collapse under the weight of the machine, especially when the ground is loose or wet.**
- **Slow down before turning.**
- **To avoid tip over, operate up and down slopes, not across. Avoid sudden starts and stops on slopes. Slow down, and use extra caution when changing direction on a slope. Do not use the machine on steep incline.**
  Park the machine on a firm, level surface.
- **Watch where you are going at all times. Watch for and avoid obstacles. Be alert at curbs, near trees, and other obstructions and hidden hazards.**
- **Do not drive a machine on streets or highways. Watch for traffic when you cross roads or operate near roads.**
- **Look to the rear before and when backing. Make sure the area immediately behind you is clear of obstructions, holes and small children. Use extra caution when a machine is equipped with Grass Catcher.**

https://truckmanualshub.com/

OPERATING FOLDABLE ROPS

WARNING

To avoid serious injury or death:

- **Always use the seat belt when the ROPS is installed.**
- **Do not use the seat belt if a foldable ROPS is down or there is no ROPS.**

WARNING

To avoid serious injury:

- **When raising or folding the ROPS, apply parking brake, stop the engine and remove the key.**
  Always perform function from a stable position from the rear of the machine.
- **Fold the ROPS down only when absolutely necessary and fold it up and lock it again as soon as possible.**
- **Before proceeding to fold the ROPS, check for any possible interference with installed implements and attachments.**
  If interference occurs, contact your local KUBOTA Dealer.

■To Fold the ROPS

1. Unscrew the knob bolts 1 to 2 turns.
2. Remove both lock pins.

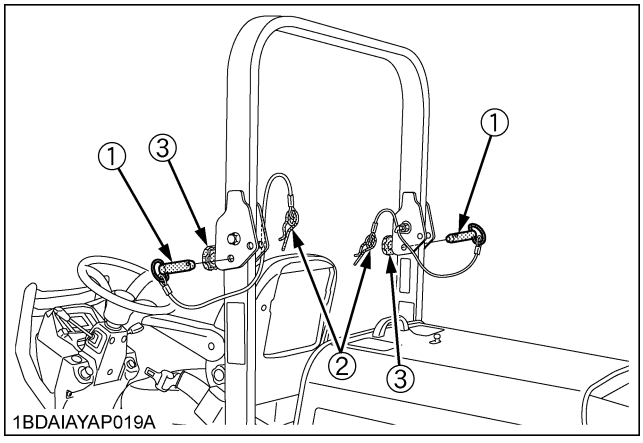

(1) Lock pin
(2) Hair pin
(3) Knob bolt

3. Fold the ROPS.

WARNING

To avoid serious injury:

- **Hold the ROPS tightly with both hands and fold the ROPS slowly and carefully.**

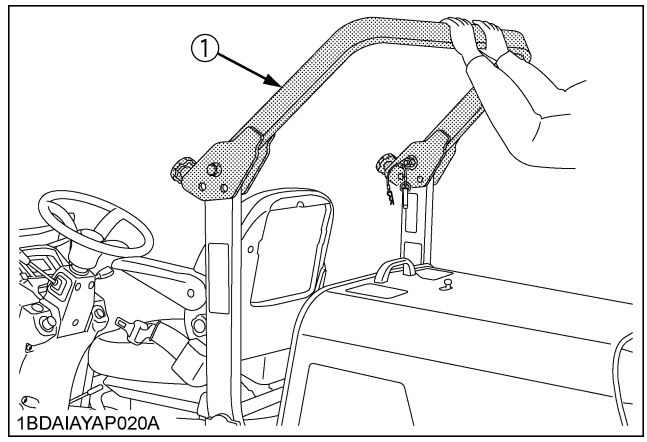

(1) ROPS

4. Align lock pin holes and insert both lock pins and secure them with the hair pins.

WARNING

To avoid serious injury:

- **Make sure that both lock pins are properly installed and secured with the hair pins.**

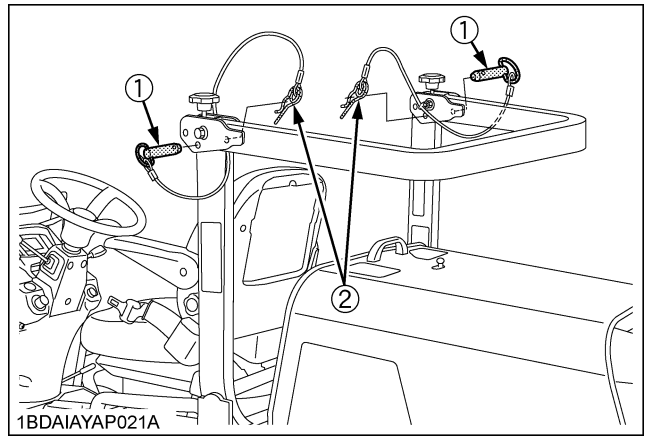

(1) Lock pin
(2) Hair pin

https://truckmanualshub.com/

■To Raise the ROPS to Upright Position

1. Remove both hair pins and lock pins.

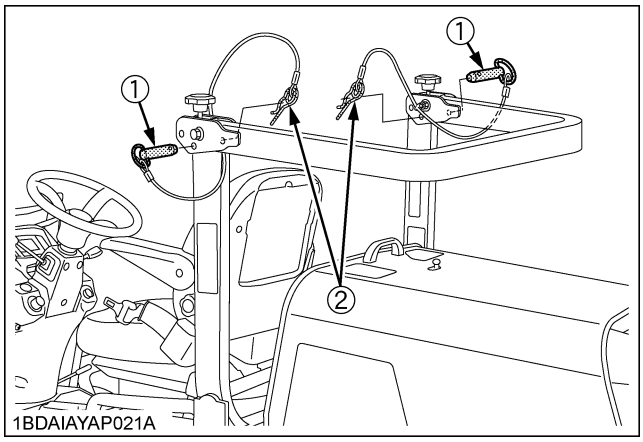

(1) Lock pin
(2) Hair pin

2. Raise ROPS to the upright position.

WARNING

To avoid serious injury:

- **Hold the ROPS tightly with both hands and raise the ROPS slowly and carefully.**

3. Align lock pin holes, insert both lock pins and secure them with the hair pins.
4. Tighten the knob bolts slightly.

WARNING

To avoid serious injury:

- **Make sure that both lock pins are properly installed as soon as the ROPS is in the upright position and secured with the hair pins.**

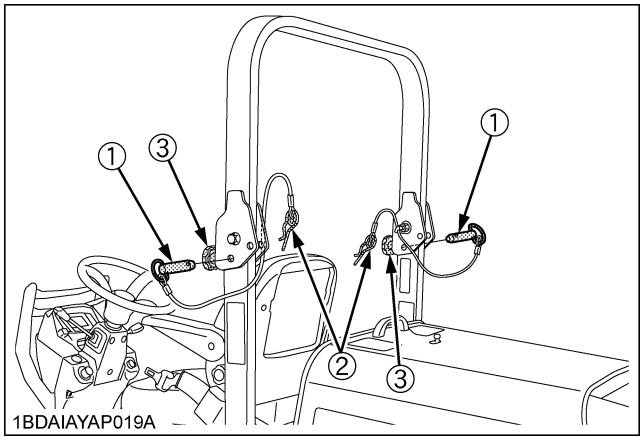

(1) Lock pin
(2) Hair pin
(3) Knob bolt

■Adjustment of Foldable ROPS

- Adjust free fall of the ROPS upper frame regularly.
- If you feel less friction when folding the ROPS, tighten the nut (1) until you feel the right friction in the movement.

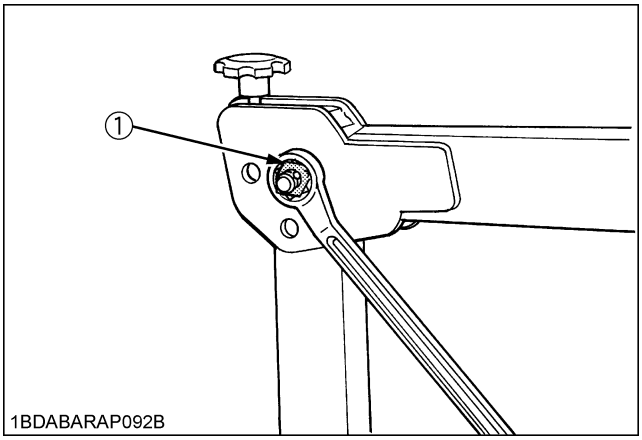

(1) Nut

https://truckmanualshub.com/

STARTING

1. Adjust the operator's position and apply the seat belt.

■Operator's Seat

WARNING

To avoid serious injury:

- **Make adjustments to the seat only while the machine is stopped.**
- **Make sure that the seat is completely secured after each adjustment.**
- **Do not allow any person other than the driver to ride on the machine.**

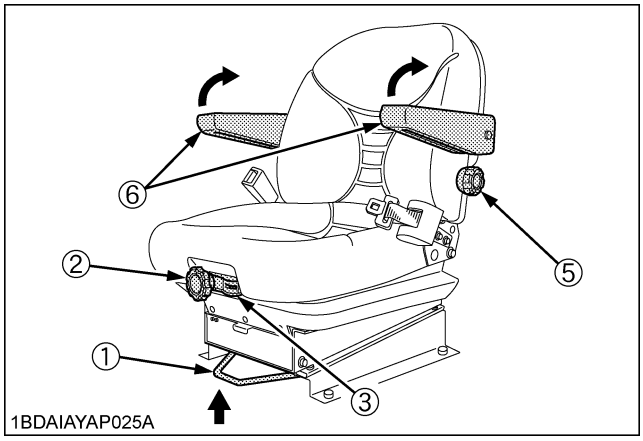

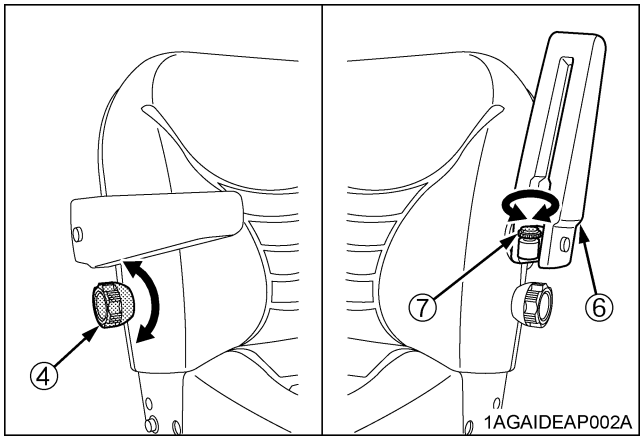

(1) Travel adjust lever
(2) Suspension adjust knob
(3) Indicator of suspension
(4) Backrest tilt adjust knob
(5) Lumbar support adjust knob
(6) Arm rest
(7) Arm rest angle adjust knob

◆ **Travel adjustment**

Unlock the travel adjust lever and slide the seat backward or forward, as required. The seat will lock in position when the lever is released.

WARNING

To avoid serious injury:

- **Use extra caution when unlocking the travel adjust lever because the seat might slide forward by itself.**

◆ **Suspension adjustment**

Turn the suspension adjust knob to achieve the optimum suspension setting.

◆ **Lumbar support adjustment**

Turn the lumbar support adjust knob to the desired position.

◆ **Backrest tilt adjustment**

Turn the backrest tilt adjust knob to the desired angle.

◆ **Arm rest**

Arm rest may be set at upright position if desired.

◆ **Arm rest angle adjustment**

Turn the arm rest angle adjust knob to the desired angle.

IMPORTANT :

- After adjusting the operator's seat, be sure to check and see that the seat is properly locked.

■Globe Box

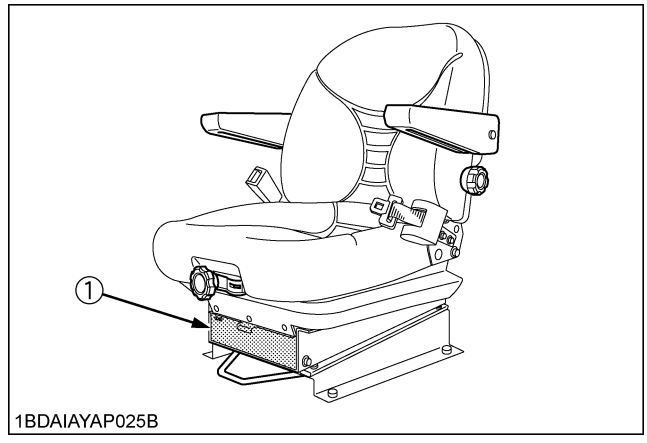

(1) Globe box

https://truckmanualshub.com/

■Steering Wheel Tilt Lever

By pulling the steering wheel tilt lever upward, the lock is released and the steering wheel can be adjusted to a desired tilt angle from the choice of 4 settings.

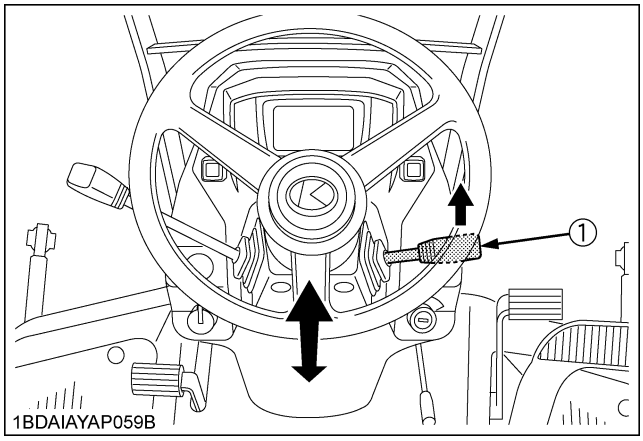

(1) Steering wheel tilt lever

■Seat Belt

WARNING

To avoid serious injury or death:

- **Always use the seat belt when the ROPS is installed.**
- **Do not use the seat belt if a foldable ROPS is down or there is no ROPS.**

Adjust the seat belt for proper fit and connect to the buckle. The seat belt is an auto-locking retractable type.

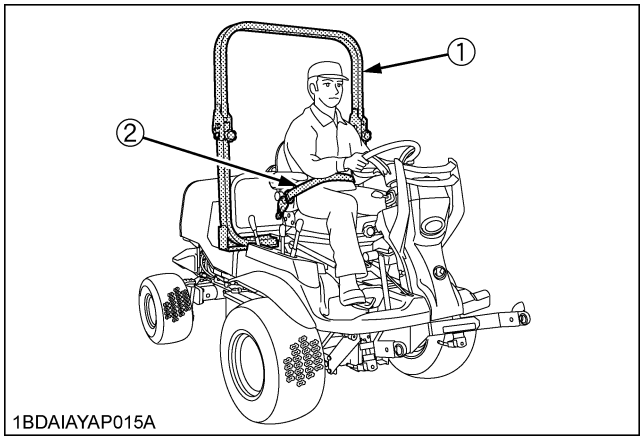

(1) ROPS
(2) Seat belt

2. Selecting Light Switch Positions

■Head Light Switch

Turning the light switch clockwise illuminates the headlight.

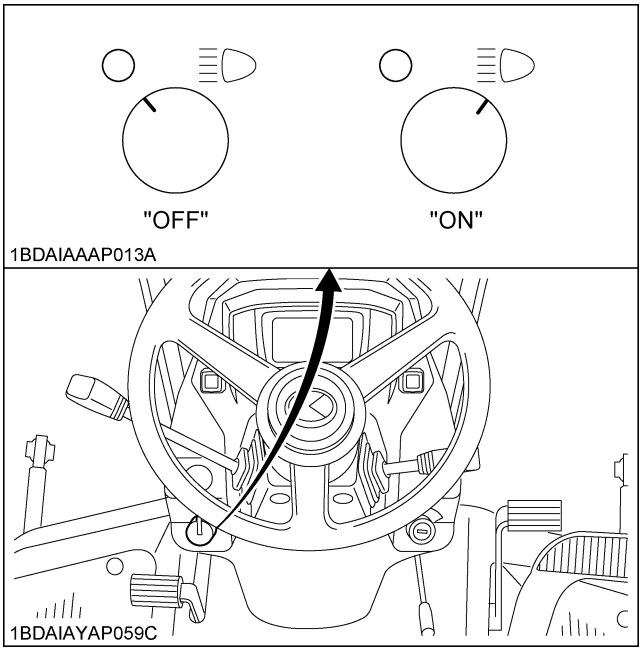

○.....*Head light OFF*
≡○.....*Head light ON*

3. Start the engine.
See "OPERATING THE ENGINE" section.

https://truckmanualshub.com/

4. Raising the implement

■Lift Link Lowering Speed Control Knob

WARNING

To avoid serious injury:

- **Fast lowering speed may cause damage or injury. Lowering speed of the implement should be adjusted to 2 or more seconds.**

The lowering speed of the lift link can be controlled by adjusting the lift link lowering speed control knob.

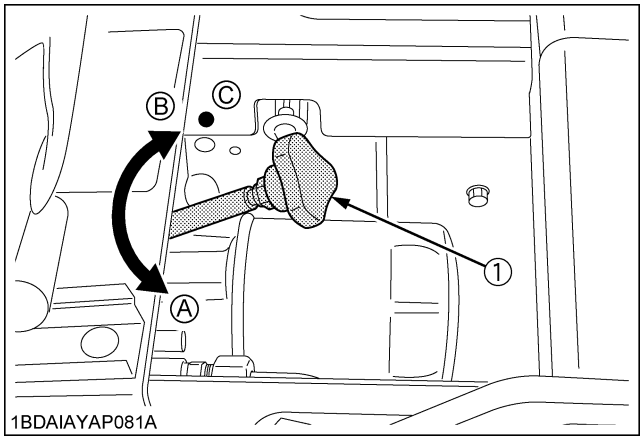

(1) Lift link lowering speed control knob
(A) "FAST": Turn counterclockwise slowly
(B) "SLOW": Turn clockwise
(C) "LOCK": Turn clockwise to the end

◆ **How to adjust the Lowering Speed**

1. Park the machine on a level surface and apply the parking brake.
2. Move the PTO lever in the "DISENGAGE" position.
3. Move the High-Low gear shift lever in the "NEUTRAL" position.
4. Start the engine and raise the implement fully.
5. Turn the lift link lowering speed knob clockwise to the "LOCK" position.
6. Stop the engine and move the Hydraulic lift lever in the "DOWN" position.
7. Turn the knob counterclockwise slowly to adjust the lowering speed.

IMPORTANT :

- Before adjustment, never check near or under the implement.
- Turn the knob slowly and carefully to avoid sudden fall of the implement.

■Hydraulic Lift Lever

The hydraulic lift lever is used to raise and lower the implement used with the machine (ex. Mower).
To lower the implement, push the lever FORWARD.
To raise it, pull the lever BACKWARD.

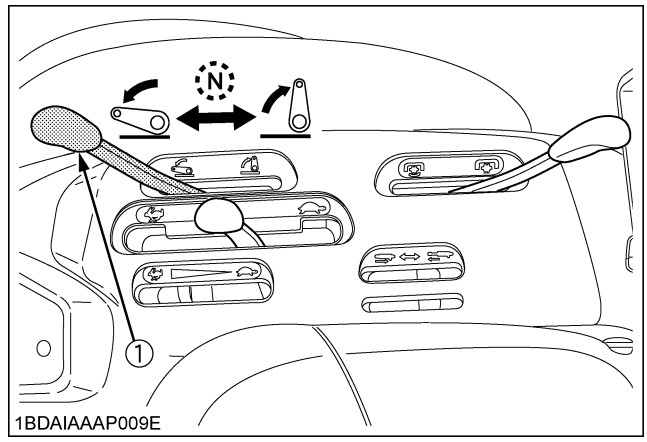

(1) Hydraulic lift lever

: "DOWN"
N: "NEUTRAL"
: "UP"

IMPORTANT :

- Do not operate until the engine is warmed up. If operation is attempted when the engine is still cold, the hydraulic system may be damaged.
- Do not operate at slow Engine rpm. Move the throttle lever above 1/2.
- If noises are heard when implement is lifting after the hydraulic lift lever has been activated, the hydraulic mechanism is not adjusted properly. Contact your local KUBOTA Dealer for adjustment.

https://truckmanualshub.com/

5. Selecting the Travel Speed

■High-Low Gear Shift Lever

WARNING

To avoid serious injury or death:

- **Shift "High-Low Gear Shift Lever" to the Low position before mowing or operating on slopes.**

High-Low gear shift lever moves in the form of an "I" in 3 stages, "LOW", "NEUTRAL" and "HIGH".
By using the speed control pedal and high-low gear shift lever, additional speeds can be obtained.

IMPORTANT :

- To shift high-low gear shift lever, stop the machine before attempting to proceed with speed change.

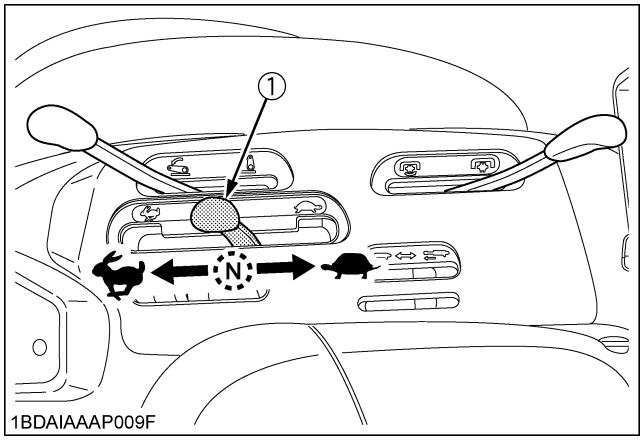

(1) High-Low gear shift lever

: "HIGH"
: "NEUTRAL"
: "LOW"

■4WD Lock Lever

WARNING

To avoid serious injury or death:

- **Do not change the 4WD lock lever to the Dual-Acting Overrunning 4WD position on slopes. Set it Full time 4WD position on slopes. Do not change the 4WD lock lever to the Full time 4WD position when turning or transporting.**

1. Change the lever to the Dual-Acting Overrunning 4WD position so that you can turn smoothly without damaging the lawn.

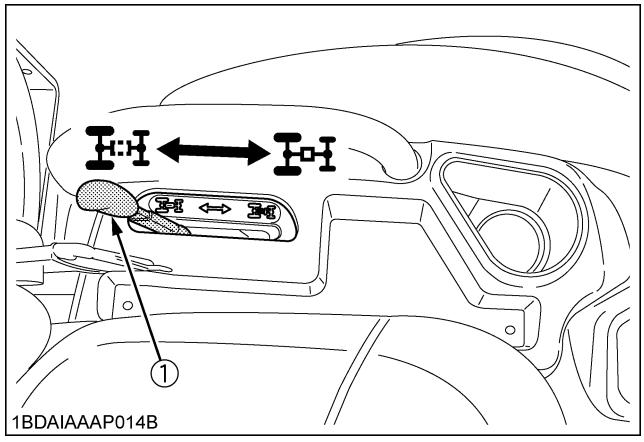

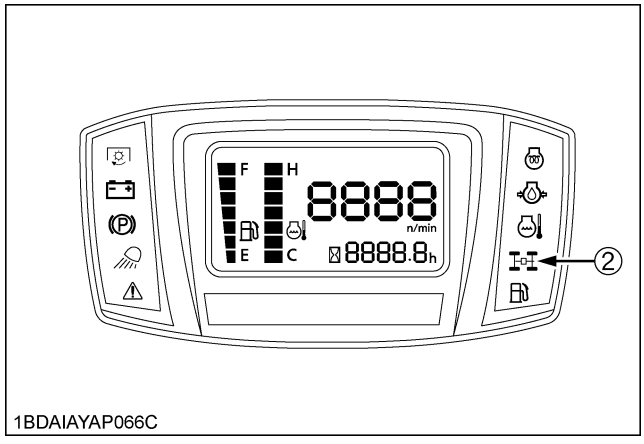

(1) 4WD lock lever
(2) 4WD indicator

: Full time 4WD
: Dual-Acting Overrunning 4WD

IMPORTANT :

- Do not steer the rear wheel sharply when the 4WD lock lever is in the "Full Time 4WD" position.

NOTE :

- When the 4WD lock lever is in the "Dual-Acting Overrunning 4WD" position, the 4WD indicator goes off. When the 4WD lock lever is in the "Full time 4WD" position, the 4WD indicator comes on.

https://truckmanualshub.com/

■PTO Lever

To drive the PTO, move the PTO lever to the "ENGAGED" position.

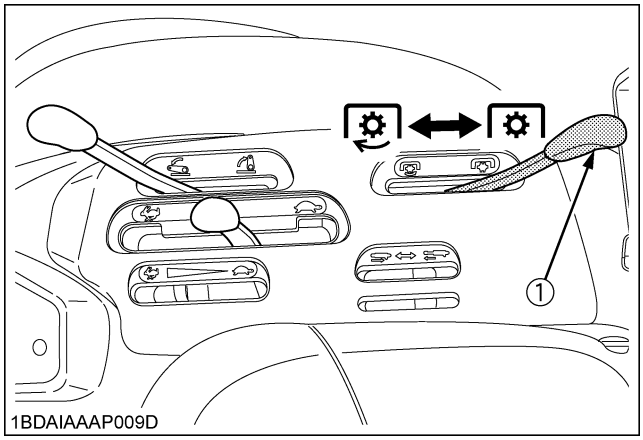

(1) PTO lever

: "ENGAGED"
: "DISENGAGED"

1. If you get off the seat while the PTO is running, the engine will stop automatically. (Seat safety control)
2. Before starting the engine, pull the PTO lever to the "DISENGAGE" position. If it is at the "ENGAGED" position, the engine will not start.

NOTE :

- These safety features are built-in.

6. Accelerating the Engine

■Throttle Lever

Pulling the throttle lever backward decreases the engine speed and pushing it forward increases the engine speed.

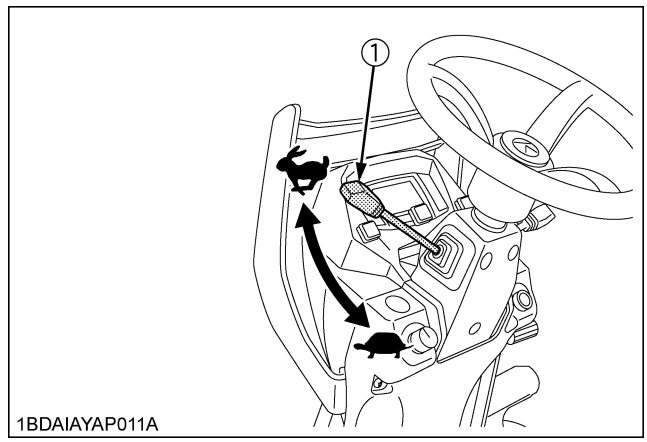

(1) Throttle lever

: "FAST"
: "SLOW"

7. Unlocking the Parking Brake

■Parking Brake

To release the parking brake, depress the brake pedal again.

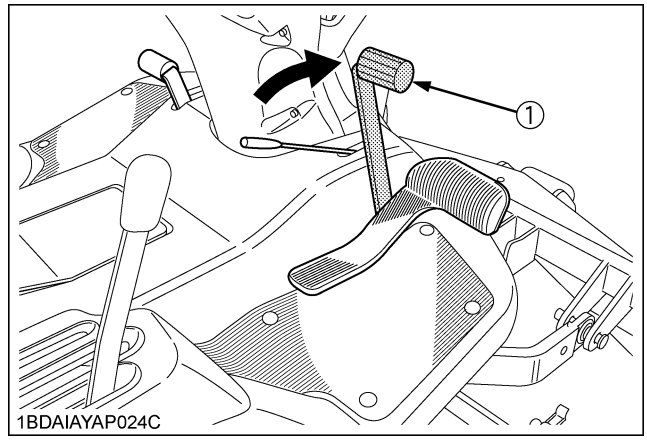

(1) Brake pedal

https://truckmanualshub.com/

8. Depressing the Speed Control Pedal

■Speed Control Pedal

WARNING

To avoid serious injury:

- **Do not operate if the machine moves on a level ground with foot off Speed Control Pedal.**

"FORWARD"
Depress the speed control pedal with the toe of your right foot to move forward.

"REVERSE"
Depress the speed control pedal with the heel of your right foot to move in reverse.

Depress the speed control pedal a little and you can drive slowly.
To increase travel-speed, depress the speed control pedal more until the desired speed is reached.

"ENGINE SPEED"
When the PTO lever is in the "ENGAGED" position, engine speed is 2500 rpm by Constant RPM Management Control. When the PTO lever is in the "DISENGAGED" position, engine speed is 2700 rpm.
See "ELECTRONIC ENGINE CONTROL" in "OPERATING THE MACHINE" section.

NOTE :

- When the parking brake is applied, the speed control pedal is locked in the "NEUTRAL" position.

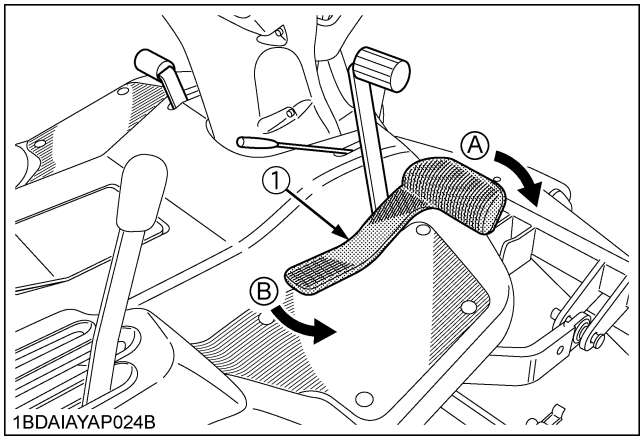

(1) Speed control pedal *(A) "FORWARD"* *(B) "REVERSE"*

■Differential Lock Pedal

WARNING

To avoid serious injury:

- **Do not drive at high speed or turn the machine when the differential is locked. Release the lock before making such a turn.**

If 1 of the front wheels should slip, step on the differential lock pedal. Then both wheels will turn together, reducing slippage.
The differential lock is applied only when the pedal is being depressed.

IMPORTANT :

- If the "Differential Lock" will not release when the pedal is released, alternately step the speed control pedal forward and backward slightly.
- Do not apply the differential lock pedal when traveling at high speed, or damage to the transmission may result.

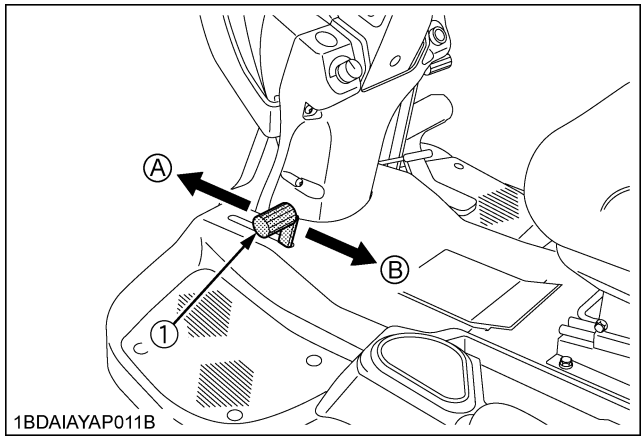

(1) Differential lock pedal *(A) "ENGAGE"* *(B) "DISENGAGE"*

STOPPING

■Stopping

1. Release the speed control pedal and depress the brake pedal to stop the machine.
2. Slow the engine down.
3. Shift PTO lever to the "DISENGAGE" position.
4. Lower all attachments, and place all control levers in their "NEUTRAL" positions.
5. Apply the parking brake, turn off the engine and remove the key from the switch.

https://truckmanualshub.com/

CHECK DURING DRIVING

■Immediately Stop the Engine if:

- The engine suddenly slows down or accelerates.
- Unusual noises suddenly occur.
- Exhaust fumes suddenly become discolored.

While driving, make the following checks to see that all the parts are functioning normally.

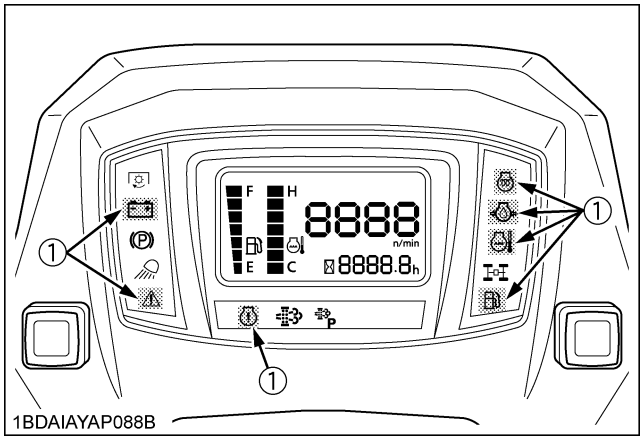

(1) Easy Checker(TM)

■Easy Checker (TM)

If the warning lamps of the Easy Checker(TM) come on during operation, immediately stop the engine, and find the cause as shown below.
Never operate the machine while Easy Checker(TM) lamp is on.

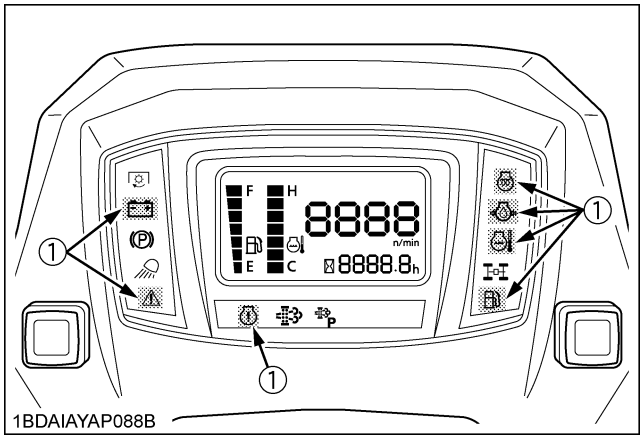

(1) Easy Checker (TM)

Engine warning [F3990 only]
If the regeneration of the DPF has a problem, the warning lamp in the Easy Checker(TM) will come on.
(See "PM Warning Level and required Procedures" section.)

Engine overheat
If the water temperature gauge reads an unusual level and the warning lamp in the Easy Checker(TM) comes on, the engine may be overheated. Check the machine by referring to "TROUBLESHOOTING" section.

Engine oil pressure
If the oil pressure in the engine goes below the prescribed level, the warning lamp in the Easy Checker (TM) will come on.
If this should happen during operation, and it does not go off when the engine is accelerated to more than 1000 rpm, check level of engine oil.
(See "Checking Engine Oil Level" in "DAILY CHECK" in "PERIODIC SERVICE" section.)

Fuel level
If the fuel in the tank goes below the prescribed level, the warning lamp in the Easy Checker(TM) will come on.
If this should happen during operation, refuel as soon as possible.
(See "Checking Amount of Fuel and Refueling" in "DAILY CHECK" in "PERIODIC SERVICE" section.)

IMPORTANT :

- When the fuel warning lamp lights up, refuel the tank as soon as possible. If the machine runs out of fuel and stalls, the engine and its components may be damaged.

Electrical charge
If the alternator is not charging the battery, the warning lamp in the Easy Checker (TM) will come on.
If this should happen during operation, check the electrical charging system or consult your local KUBOTA Dealer.

https://truckmanualshub.com/

⚠ Master system warning
If trouble should occur at the engine, transmission or other control parts, the indicator flashes as a warning. If the trouble is not corrected by restarting the machine, consult your local KUBOTA Dealer.

Glow plug Indicator (Pre-heating Indicator)
When the key switch is in the "PREHEAT" position, the glow plug indicator illuminates.

NOTE :
- For checking and servicing of your machine, consult your local KUBOTA Dealer for instructions.

LCD MONITOR

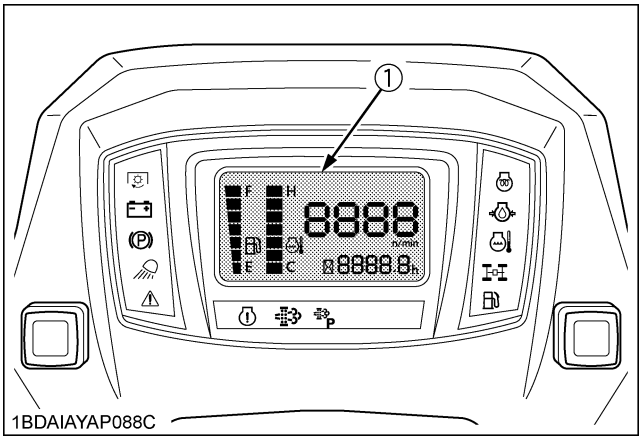

(1) LCD monitor

■Fuel Gauge

When the key switch is on, the fuel gauge indicates the fuel level.
Be careful not to empty the fuel tank. Otherwise air may enter the fuel system.
Should this happen, the system should be bled. (See "Bleeding Fuel System" in "SERVICE AS REQUIRED" in "PERIODIC SERVICE" section.)

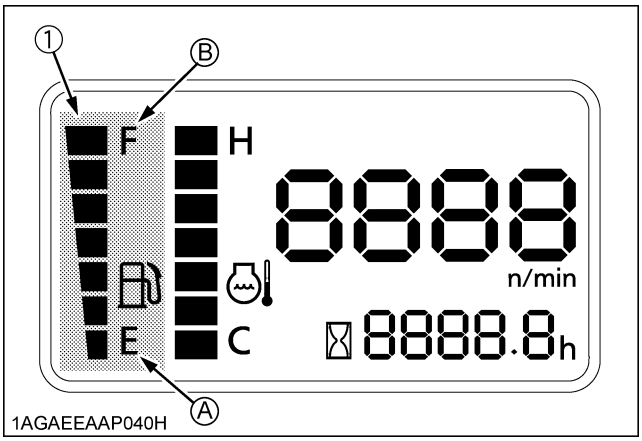

(1) Fuel gauge
(A) "EMPTY"
(B) "FULL"

https://truckmanualshub.com/

ENGLISH

■Coolant Temperature Gauge

WARNING

To avoid serious injury:

- **Do not remove radiator cap until coolant temperature is well below its boiling point. Then loosen the cap slightly to relieve any pressure before removing the cap completely.**

1. With the key switch "ON", this gauge indicates the temperature of the coolant. "C" for "cold" and "H" for "hot".
2. If the indicator reaches the "H" position (red zone), engine coolant is overheated. Check the machine by referring to "TROUBLESHOOTING" section.

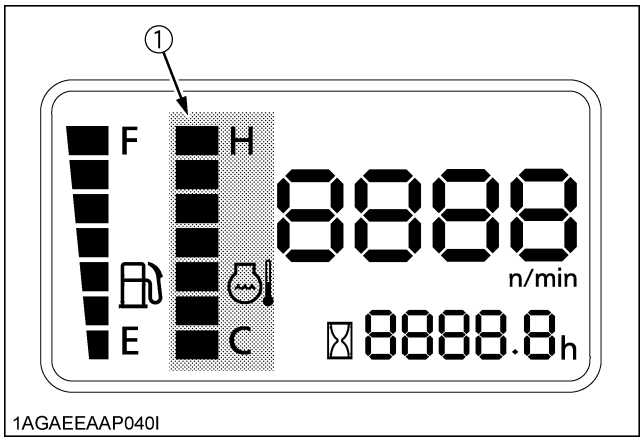

(1) Coolant temperature gauge

■Hourmeter / Tachometer

This meter gives readings for engine speed and the hours the machine has been operated.

1. The tachometer indicates the engine speed.
2. The hourmeter indicates in 5 digits the hours the machine has been used; the last digit indicates 1/10 of an hour.

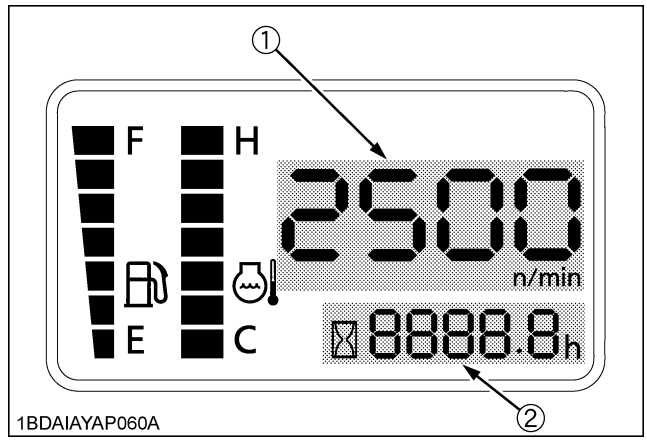

(1) Engine revolution
(2) Hours used

https://truckmanualshub.com/

■Service Code Display

The key switch is on, and if the service code ("SEr00" or "SEr02") shown in the figure below is displayed on the liquid crystal display, the servicing tasks corresponding to the indication on hour meter (displayed at 10 seconds after that) should be carried out on the machine.
See "SERVICE INTERVALS" in "MAINTENANCE" section.

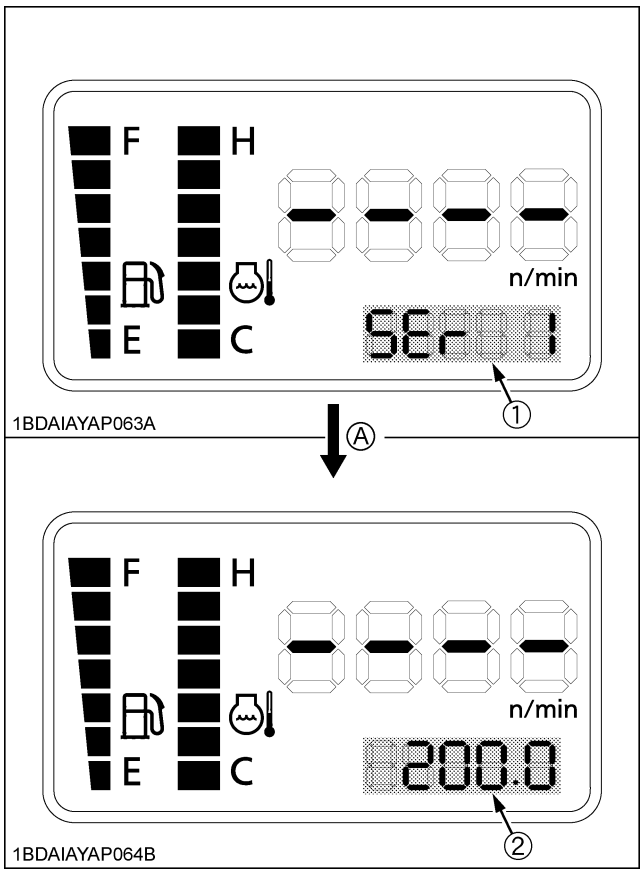

(1) Service code
(2) Hours used
(A) At 10 seconds after the service code has displayed.

■Overheat Alarm

If the temperature of the coolant rises to overheat temperature, the overheat alarm whistles.
Check the machine by referring to "TROUBLE SHOOTING" section.

ELECTRONIC ENGINE CONTROL

[F3990 only]

■Constant RPM Management Control

Constant RPM Management can be turned "ON" or "OFF" by moving the PTO lever. Moving the PTO lever to the "ENGAGED" position turns the control "ON" and moving the PTO lever to the "DISENGAGED" position turns it "OFF".

◆ When constant RPM management is "ON"

Fluctuations in the engine speed due to load fluctuations are reduced and the travel speed and PTO speed are kept nearly constant, allowing stable work. When constant RPM management is "ON", the constant RPM management indicator light up.

◆ When constant RPM management is "OFF"

As in a conventional engine, the engine speed increases or decreases according to changes in the load. The operator judges the size of the load from the engine speed and engine sound, and can adjust the travel speed or cutting height to prevent overload on the machine.

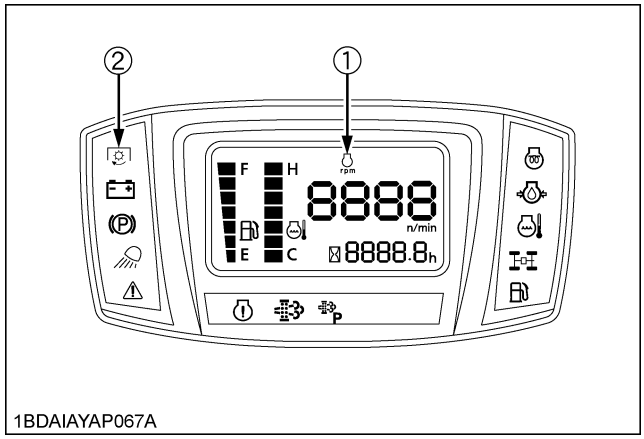

(1) Constant RPM management indicator
(2) PTO clutch indicator

NOTE :

- In a mechanically-controlled engine, the engine speed changes according to increases and decreases in the load.
  When the constant RPM management in this machine with its electronically controlled engine is turned "ON", the engine speed will be kept nearly constant in response to a certain level of load fluctuations. This improves the accuracy of work without the need for troublesome manipulation of the travel speed and hand throttle lever.
- There is a limit to the range within which a constant speed can be maintained. If a load exceeding the engine performance is applied, the engine speed will drop.

https://truckmanualshub.com/

- The purpose of constant RPM management is not to increase the engine power.

PARKING

■Parking

WARNING

To avoid serious injury:
Before leaving the operator's position:
- **Apply parking brake.**
- **Lower all implements to the ground.**
- **Shut off the engine.**
- **Remove the key.**

1. When parking, be sure to set the parking brake.
   To apply the parking brake;
   Depress the brake pedal firmly and hold it in position. Pull and hold parking brake lever, and release the brake pedal.
2. Before getting off the machine, disengage the PTO, lower all implements to the ground, place all control levers in their neutral positions, set the parking brake, stop the engine and remove the key.
3. If it is necessary to park on an incline, be sure to chock the wheels to prevent accidental rolling of the machine.

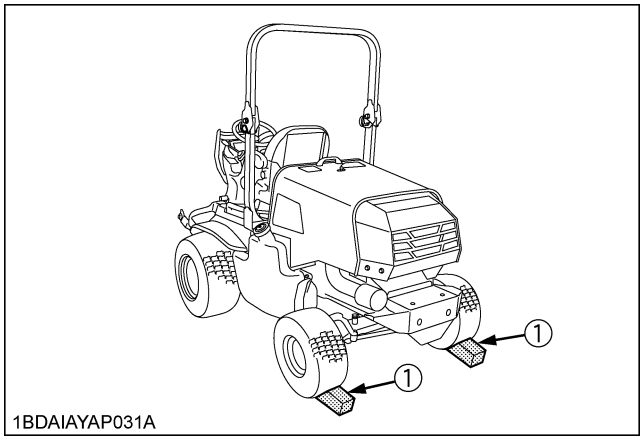

(1) Chocks

TRANSPORTING

1. Do not tow this machine a long distance, or damage to the transmission may result.
2. Transport the machine on a trailer.
   - Fasten the machine to the trailer.
   - Prevent the hood from opening by the wind by securing the hood adequately. If necessary, load the machine backward or use the stable strap.

■Directions for Use of Power Steering

1. Power steering is activated only while the engine is running. Slow engine speeds make the steering a little heavier. While the engine is stopped, the machine functions in the same manner as machines without power steering.
2. When the steering wheel is turned all the way to the stop, the relief valve is activated. Do not hold the steering wheel in this position for a long period of time.
3. Avoid turning the steering wheel while the machine is stopped, or tires may wear out sooner.
4. The power steering mechanism makes the steering easier. Be careful when driving on a road at high speeds.

https://truckmanualshub.com/

TIRES, WHEELS AND BALLAST

TIRES

WARNING

To avoid serious injury:

- **Do not attempt to mount a tire on a rim. This should be done by a qualified person with the proper equipment.**
- **Always maintain the correct tire pressure. Do not inflate tires above the recommended pressure shown in the Operator's Manual.**

IMPORTANT :

- Do not use tires other than those approved by KUBOTA.

WARNING

To avoid serious injury:

Never operate the machine with a loose rim, wheel, or axle.

- **Whenever bolts are loosened, retighten to specified torque.**
- **Check all bolts frequently and keep them tightened.**

■Inflation Pressure

Though the inflation pressure is factory-set to the prescribed level, it naturally drops slowly in the course of time. Thus, check it everyday and inflate as necessary.

		Tire sizes	Recommended Inflation Max. Pressure
Front	F2690E	23 x 10.5 - 12, 4PR	140 kPa (1.4 kgf/cm^2, 20 psi)
	F2690 F3990	24 x 12 - 12, 4PR	
Rear	F2690E	16 x 6.5 - 8, 4PR	190 kPa (1.9 kgf/cm^2, 28 psi)
	F2690 F3990	18 x 9.5 - 8, 4PR	250 kPa (2.5 kgf/cm^2, 36 psi)

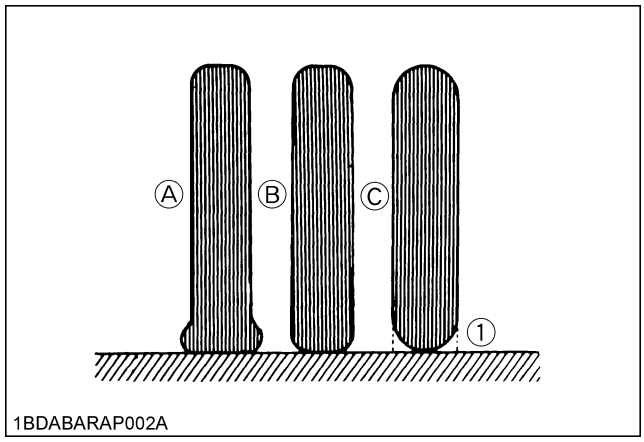

(1) Ground

(A) "INSUFFICIENT"
(B) "NORMAL"
(C) "EXCESSIVE"

WHEELS

IMPORTANT :

- Follow the same checking procedure when the machine is first used.

■Front Wheels (Drive Wheels)

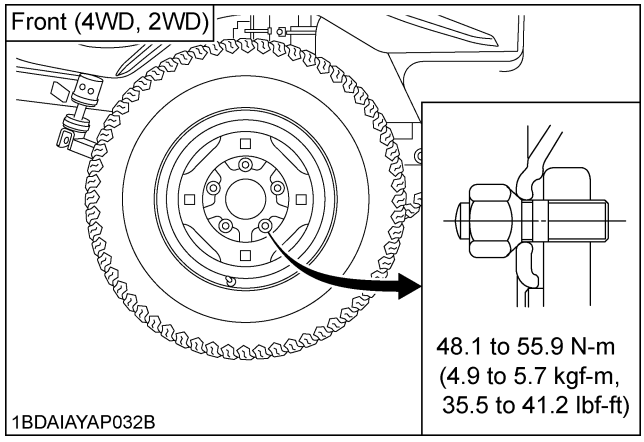

https://truckmanualshub.com/

Wheels with beveled or tapered holes:
Use the tapered side of the lug nut.

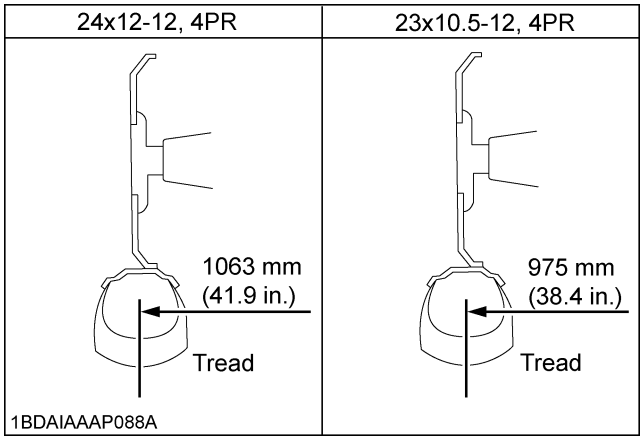

■Rear Wheels (Steering Wheels)

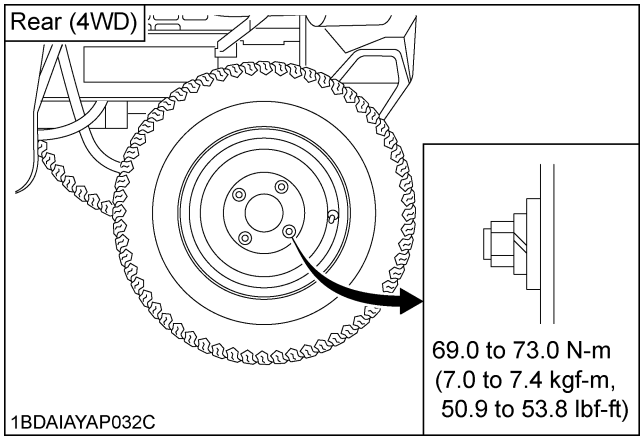

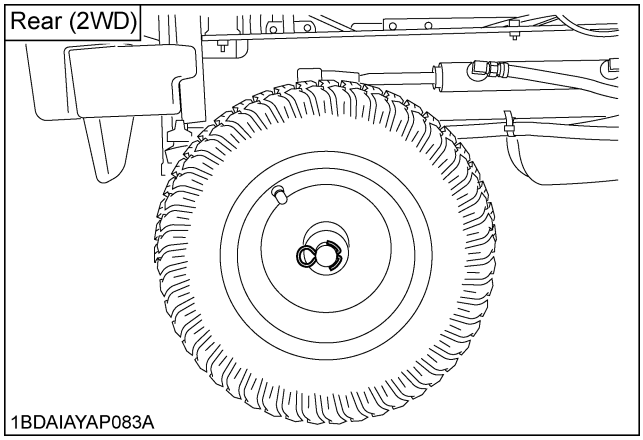

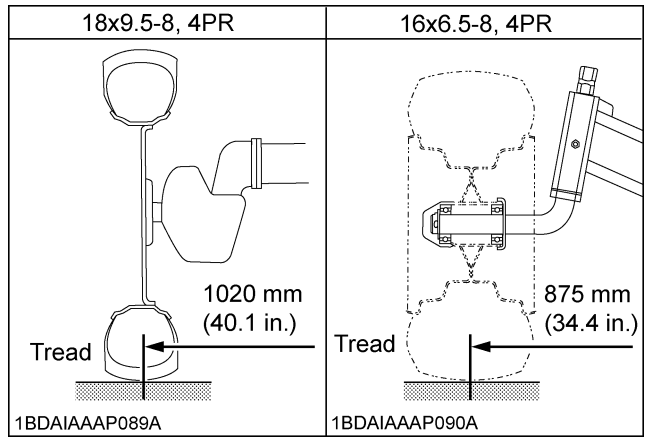

BALLAST

WARNING

To avoid serious injury:

- **Additional ballast will be needed for operating heavy attachments. When the attachment is raised, drive slowly over the rough ground, regardless of how much ballast is used.**

Add ballast to the rear end if needed for stability. Heavy front mounted attachments tend to lift rear wheels. Add enough ballast to maintain steering control and prevent tipover. The Attachment's Manual shows how much rear ballast is required for your application. Rear ballast is available from your local KUBOTA Dealer.

https://truckmanualshub.com/

MAINTENANCE

SERVICE INTERVALS

The following servicing tasks should be carried out on the machine at the stated running-time intervals.

No.	Items		Indication on hour meter (Hr)												Interval	Ref. page		
			50	100	150	200	250	300	350	400	450	500	550	600				
1	Engine start system	Check	○	○	○	○	○	○	○	○	○	○	○	○	every 50 Hr	53		
2	OPC system	Check	○	○	○	○	○	○	○	○	○	○	○	○	every 50 Hr	54		
3	Greasing	-	○	○	○	○	○	○	○	○	○	○	○	○	every 50 Hr	54		
4	Wheel bolt torque	Check	○	○	○	○	○	○	○	○	○	○	○	○	every 50 Hr	57		
5	Oiling	-	○	○	○	○	○	○	○	○	○	○	○	○	every 50 Hr	56		
6	Battery condition	Check		○		○		○		○		○		○	every 100 Hr	57	*7	
7	Air cleaner element	Clean		○		○		○		○		○		○	every 100 Hr	59	*2	@
		Replace													every 1000 Hr or 1 year	67	*5	
8	Fan belt	Adjust		○		○		○		○		○		○	every 100 Hr	62	*3	
9	Brake pedal	Adjust		○		○		○		○		○		○	every 100 Hr	61		
10	Fuel filter element	Check		○		○		○		○		○		○	every 100 Hr	60		@
		Replace								○					every 400 Hr	67	*3	
11	Engine oil	Change	◎			○				○				○	every 200 Hr	62	*1	
12	Engine oil filter	Replace	◎			○				○				○	every 200 Hr	63	*1	
13	Transmission oil filter	Replace	◎			○				○				○	every 200 Hr	64	*1	
14	Transmission fluid	Change								○					every 400 Hr	64		
15	Transmission strainer	Clean								○					every 400 Hr	65		
16	Rear axle differential case fluid	Change								○					every 400 Hr	66		
17	Rear axle gear case (RH & LH) fluid	Change								○					every 400 Hr	66		
18	Rear axle pivot	Adjust								○					every 400 Hr	67		
19	Engine valve clearance	Adjust													every 800 Hr	67	*3	
20	Fuel injection nozzle (injection pressure)	Check													every 1500 Hr	67	*3	@

https://truckmanualshub.com/

ENGLISH

No.	Items		Indication on hour meter (Hr)												Interval	Ref. page		
			50	100	150	200	250	300	350	400	450	500	550	600				
21	Exhaust manifold [F3990 only]	Check													every 1000 Hr or 1 year	67	*3	@
22	Radiator	Clean													every 2000 Hr or 2 years	68	*6	
23	Coolant	Change													every 2000 Hr or 2 years	68	*6	@
24	Turbo charger [F3990 only]	Check													every 3000 Hr	70	*3	@
25	Injection pump	Check													every 3000 Hr	70	*3	@
26	Radiator hose and clamp	Check													every 1 year	70	*4	
		Replace													every 4 years	72	*3	
27	Hydraulic hose	Check													every 1 year	71	*4	
		Replace													every 4 years	72	*3	
28	Fuel line	Check													every 1 year	71	*4	@
		Replace													every 4 years	72	*3	
29	Intake air line	Check													every 1 year	72	*4	@
		Replace													every 4 years	72		
30	Engine breather hose	Check													every 1 year	72	*4	
		Replace													every 4 years	72	*3	
31	Fuel system	Bleed													Service as Required	74		
32	Fuse	Replace														73		
33	Light bulb	Replace														74		
34	Lift spring	Adjust														75		

IMPORTANT :

- The jobs indicated by ◎ must be done initially.
  - *1 The initial 50 hours should not be a replacement cycle.
  - *2 Air cleaner should be cleaned more often in dusty conditions than in normal conditions. Operation with a clogged air cleaner can cause a regeneration failure and DPF damage.
  - *3 Consult your local KUBOTA Dealer for this service.
  - *4 Replace if any deterioration (crack, hardening, scar, or deformation) or damage occurred.
  - *5 Every 1000 hours or every 1 year whichever comes faster.
  - *6 Every 2000 hours or every 2 years whichever comes faster.
  - *7 When the battery is used for less than 100 hours per year, check the battery condition by reading the indicator annually.

https://truckmanualshub.com/

- The items listed above (@ marked) are registered as emission related critical parts by KUBOTA in the U.S.EPA non-road emission regulation. As the engine owner, you are responsible for the performance of the required maintenance on the engine according to the above instruction.
  Please see the Warranty Statement in detail.

https://truckmanualshub.com/

PERIODIC SERVICE CHART LABEL

[F2690E, F2690]

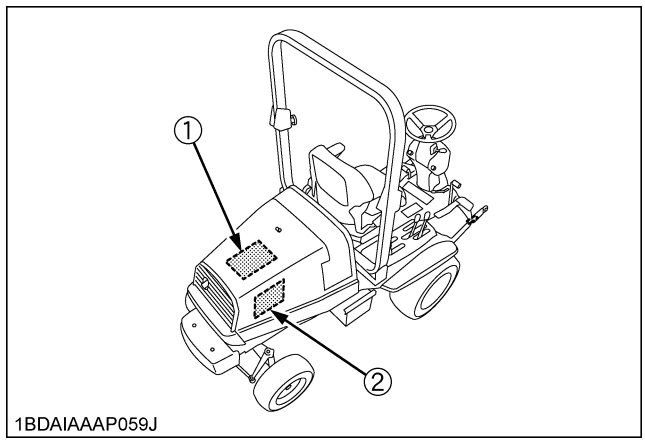

[F3990]

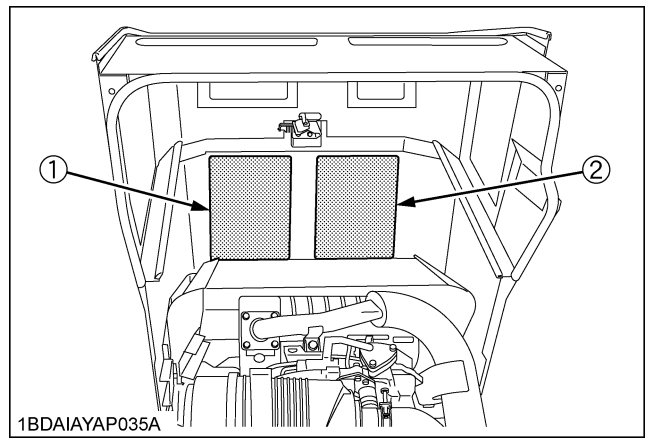

(1) Part No. K3615-4761-4 (ENGLISH)

PERIODIC SERVICE CHART

INTERVAL			RECOMMENDED SERVICE See Operator's Manual in details.
DAILY		CHECK	1.Tire pressure, wear or damage. 2.Oil and water leakage from machine and mower. 3.Engine oil, transmission fluid, recovery tank coolant and fuel level. 4.Damage to machine body, tightness of all bolts, nuts and pins, etc. 5.Mower blades and belt for wear or damage. 6.Brake pedal and safety switches. 7.Color of the exhaust fumes, abnormal noise and vibrations. 8.Seat belt and Rops.
		CLEAN	・Radiator screen/Bonnet screen/Air cleaner primary element/Mower deck
		GREASE	・Mower U-joint(3 places)/ Spindle shaft(3 places)/Belt tension pulley and pivot
FIRST 50 Hr. 【BREAK-IN】(MUST BE DONE)		CHANGE	・Engine oil/Mower Gear box oil
		REPLACE	・Engine oil filter/Transmission oil filter
EVERY	50 Hr.	CHECK	・Engine start system/OPC system/Mower gear box oil
		GREASE	・Speed control pedal boss/Lift link boss(R&L)/Differential lock pedal boss/Universal joint/DT drive shaft(4WD)/Knuckle arm(4WD)/ Rear axle pivot(2WD)/Seat adjuster/Cable(Throttle)(F2690/F2890/F3090/ F3690/F3890)/Front gauge wheels and gauge wheel brackets/Front roller
	100 Hr.	ADJUST	・Fan belt☆/Brake pedal
		CHECK	・Battery condition/Fuel filter element
		CLEAN	・Air cleaner element★
	150 Hr.	CHANGE	・Mower gear box oil
	200 Hr.	CHANGE	・Engine oil
		CHECK	・Radiator hose and clamp/Hydraulic hose/Intake air line
		REPLACE	・Engine oil filter/Transmission oil filter
	400 Hr.	ADJUST	・Rear axle pivot
		CHANGE	・Transmission fluid/ Rear axle gear case fluid/Differential case fluid
		CLEAN	・Transmission strainer
		REPLACE	・Fuel filter element
	800 Hr.	ADJUST	・Engine valve clearance☆
	1500 Hr.	CHECK ☆	・Fuel injection nozzle injection pressure☆
	3000 Hr.	CHECK ☆	・Injection pump☆/Turbo charger☆
	1 Year	CHECK ☆ ■ ●	・Radiator hose and clamp/Hydraulic hose/Fuel line/Engine breather hose Mower gear box oil seal/Intake air line
	1 Year/1000Hr ▲	REPLACE	・Air cleaner element
	2 Year/2000Hr ▲	FLUSH	・Cooling System
	2 Year/2000Hr ▲	CHANGE	・Coolant

☆:SHOULD BE SERVICED BY KUBOTA DEALER. ★:REQUIRED MORE OFTEN IN DUSTY CONDITIONS. ■:Replace if neccesary.
●:Replace for maximun every 4 years. ▲:Whichever comes first.
Tire maximum pressure and tightening torque recommendation.

	Tire sizes		Inflation Pressure	tightening torque
Front	4WD	24x12.0-12	140 kPa(20psi)	49.0 Nm(36 ft・lbs)
	2WD	23x10.5-12		
Rear	4WD	18x9.5-8	250 kPa(36psi)	88.3 Nm(65 ft・lbs)
	2WD	16x6.5-8	190 kPa(28psi)	—

Approximate fluid capacities.

	F2690/F2890	F3090/F3690/F3890	F3990		F2690/F2890/F3090/F3690/F3890/F3990
Engine	3.5L (3.69qts.)	5.0L (5.29qts.)	4.7L (4.97qts.)	Differential case	1.5L (1.59qts.)
Radiator	4.6L (4.86qts.)		3.7L(3.91qts.)	Rear axle gear case	0.5L (0.53qts.)
Reserve tank	0.6L (0.63qts.)		1.1L(1.16qts.)	Mower gear box	0.4L (0.42qts.)
Transmission	14L (14.79qts.)				

1BDAIAYAP093A

(2) Part No. K3615-4751-3 (SPANISH)

LISTA DE SERVICIOS PERIÓDICOS

INTERVALO			SERVICIO RECOMENDADO Consulte el manual del operador para más detalles.
DIARIO		COMPROBACIÓN	1.Presion, desgaste y daños de neumáticos. 2.Fugas de aceite y agua de la máquina y segadora. 3.Aceite de motor, líquido de la transmisión, nivel de combustible y refrigerante en el depósite de recuperación. 4.Daños en la carrocería de la máquina, apriete de pamos, tuercas, pasadores, etc. 5.Desgaste o daños de correa y cuchillas de la segadora. 6.Pedal de freno y interruptores de seguridad. 7.Color del humo de escape, ruidos y vibraciones anormales. 8.Cinturón de seguridad y Rops.
		LIMPIEZA	・Pantalla de radiador/Pantalla de capó/ Elemento principal del filtro de aire/Plataforma de corte
		ENGRASE	・Unión en U de segadora(3 lugares)/Husillo (3 lugares)/ Polea de tensión de correa y pivote de tensión de la correa
PRIMERAS 50 horas 【RODAJE】(DEBE REALIZARSE)		CAMBIO	・Aceite de motor/Aceite de caja de engranajes de segadora
		REEMPLAZO	・Filtro de aceite del motor/Filtro de aceite de transmisión
CADA	50 horas	COMPROBACIÓN	・Dispositivo de seguridad/Par de apriete para los tornillos de rueda/ Aceite del engranaje de la segadora
		ENGRASE	・Resalto de pedal de control de velocidad/Resalto de enlace de elevación (DE./IZ.)/ Resalto de pedal de bloqueo de diferencial/Junta universal/ Árbol de transmisión DT(4WD)/Brazo de mangueta(4WD)/Pivote de eje trasero(2WD)/ Regulador de asiento/Cable (acelerador)(F2690/F2890/F3690)/ Ruedas delanteras y mensulas de ruedas/Rodillo delantero
	100 horas	AJUSTE	・Correa de ventilador / Pedal de freno
		COMPROBACIÓN	・Condición de la batería / Circuito de combustible
		LIMPIEZA	・Elemento principal del filtro de aire★
	150 horas	CAMBIO	・Aceite de la caja de engranajes de la segadora
	200 horas	CAMBIO	・Aceite de motor
		COMPROBACIÓN	・Manguito de radiador y abrazadera/Manguito hidráulico/Línea de aire de admisión
		REEMPLAZO	・Filtro de aceite del motor/Filtro de aceite de transmisión
	400 horas	AJUSTE	・Pivote de eje trasero
		CAMBIO	・Líquido de transmission/Caja de engranajes de eje trasero/Caja de diferencial
		LIMPIEZA	・Filtro de transmisión
		REEMPLAZO	・Elemento de filtro de combustible/Filtro del aceite hidráulico
	800 horas	AJUSTE	・Despeje de válvulas del motor☆
	1500 horas	COMPROBACIÓN	・Presión de inyección de inyector de combustible
	3000 horas	COMPROBACIÓN	・Bomba de inyección☆/Turbocompresor☆
	1 año	COMPROBACIÓN ☆ ■ ●	・Manguera y abrazadera del radiador / Manguera del sistema hidráulico / Línea de combustible / Sello del aceite de la caja de cambios del cortacéspedes / Línea de toma de aire / Manguera de respiradero del motor
	1 años/1000hr.▲	REEMPLAZO	・Ambos elementos filtro de aire
	2 años/2000hr.▲	RUBOR	・Sistema de refrigeración
	2 años/2000hr.▲	REEMPLAZAR	・Refrigerante

☆ : El servicio de mantenimiento debe proporcionarlo un distribuidor de KUBOTA. ★ : Se requiere más seguido en condiciones polvorosas.
■ : Reemplace si es necesario. ● : Reemplace tpdps los 4 años al menos. ▲ : lo que ocurra primero.
Recomendaciones para la presión máxima y el par de apriete de los neumáticos.

Tamaños de neumáticos			Presión de inflación	Par de apriete
Delanteros	4WD	24x12.0-12	140 kPa(20psi)	49.0 Nm(36 ft・lbs)
	2WD	23x10.5-12		
Traseros	4WD	18x9.5-8	250 kPa(36psi)	88.3 Nm(65 ft・lbs)
	2WD	16x6.5-8	190 kPa(28psi)	—

Capacidades de combustible aproximadas

	F2690/F2890	F3690	F3990		F2690/F2890/F3690/F3990
Motor	3.5L (3.69qts.)	5.0L (5.29qts.)	4.7L (4.97qts.)	Caja de diferencial	1.5L (1.59qts.)
Radiador	4.6L (4.86qts.)		3.7L(3.91qts.)	Caja de engranajes de eje trasero	0.5L (0.53qts.)
Depósito de reserva	0.6L (0.63qts.)		1.1L(1.16qts.)	Caja de engranajes de la segadora	0.4L (0.42qts.)
Transmisión	14L (14.79qts.)				

1BDAIAYAP093B

https://truckmanualshub.com/

LUBRICANTS, FUEL AND COOLANT

Place	Capacities			Lubricants	
	F2690E	**F2690**	**F3990**		
Fuel	61 L (16.1 U.S.gals)			• No.2-D S15 diesel fuel • No.1-D S15 diesel fuel if temperature is below -10℃ (14℉)	
Coolant	4.6 L (4.9 U.S.qts.)		3.7 L (3.9 U.S.qts.)	Fresh clean water with anti-freeze	
Recovery tank	0.6 L (0.6 U.S.qts.)		1.1 L (1.1 U.S.qts.)		
Engine crankcase	3.5 L (3.7 U.S.qts.)*1		4.7 L (5.0 U.S.qts.)*1	• Engine oil: Refer to next page	
				Above 25℃ (77℉)	SAE30, SAE10W-30 or 15W-40
				-10℃ to 25℃ (14 to 77℉)	SAE20, SAE10W-30 or 15W-40
				Below -10℃ (14℉)	SAE10W-30
Transmission case	14 L (14.8 U.S.qts.)			• KUBOTA SUPER UDT-2 fluid*2	
Rear axle Differential case	1.5 L (1.6 U.S.qts.)			• KUBOTA SUPER UDT-2 fluid*2 or SAE80 - SAE90 gear oil	
Rear axle gear case (RH & LH)	0.5 L (0.5 U.S.qts.)				

Note *1 Oil amount when the oil level is at the upper level of the oil level gauge.
*2 The product name of KUBOTA genuine UDT fluid may be different from that in the Operator's Manual depending on countries or territories. Consult your local KUBOTA Dealer for further detail.

Greasing**	No. of greasing points			Capacity	Type of grease
	F2690E	**F2690**	**F3990**		
Speed control pedal shaft	1	1	1	Until grease overflows	• Multipurpose EP2 Grease (NLGI Grade No. 2)
Lift link boss (RH & LH)	2	2	2		
Differential lock pedal boss	1	1	1		
Universal joint	1	1	1		
Rear wheel drive shaft (F & R for 4WD)	---	2	2		
Knuckle arm (RH & LH for 4WD)	---	2	2		
King pin (RH & LH for 2WD)	2	---	---		
Seat adjuster	2	2	2	Moderate amount	• Oil
HST neutral shaft	1	1	1		
Cable (Throttle)	1	1	1		

Note ** See "Lubricating All Grease Fittings" in "EVERY 50 HOURS" in "PERIODIC SERVICE" section for details.

IMPORTANT :
- To prevent serious damage to hydraulic systems, use only KUBOTA genuine fluid or its equivalent.

https://truckmanualshub.com/

NOTE :

◆ **Engine Oil:**

- Oil used in the engine should have an American Petroleum Institute (API) service classification and Proper SAE Engine Oil according to the ambient temperatures as shown above:
- Refer to the following table for the suitable API classification engine oil according to the engine type (with DPF or non-DPF (Diesel Particulate Filter) type engines) and the fuel.
- The CJ-4 engine oil is intended for DPF (Diesel Particulate Filter) type engine.

Fuel used	Engine oil classification (API classification)	
	Oil class of engines except DPF [F2690E, F2690]	Oil class of engines with DPF [F3990]
Ultra Low Sulfur Fuel [<0.0015% (15 ppm)]	**CF, CF-4, CG-4, CH-4 or CI-4**	**CJ-4**

◆ **Fuel:**

- Use the ultra low sulfur diesel fuel only [below 0.0015% (15 ppm)] for these engines.
- Cetane number of 45 minimum. Cetane number greater than 50 is preferred, especially for temperatures below -20℃ (-4℉) or elevations above 1500 m (5000 ft).
- Diesel fuels specified to EN 590 or ASTM D975 are recommended.
- No.2-D is a distillate fuel of lower volatility for engines in industrial and heavy mobile service. (SAE J313 JUN87)

◆ **Transmission Oil:**

*KUBOTA Super UDT-2: For an enhanced ownership experience, we highly recommend Super UDT-2 to be used instead of standard hydraulic/transmission fluid.
Super UDT-2 is a proprietary KUBOTA formulation that delivers superior performance and protection in all operating conditions.
Regular UDT is also permitted for use in this machine.

- Indicated capacities of water and oil are manufacturer's estimate.

https://truckmanualshub.com/

PERIODIC SERVICE

WARNING

To avoid serious injury:

- **Do not work under any hydraulically supported devices. They can settle, suddenly leak down, or be accidentally lowered. If necessary to work under the machine or any machine elements for servicing or adjustment, securely support them with stands or suitable blocking beforehand.**

HOW TO OPEN THE HOOD

WARNING

To avoid serious injury from contact with moving parts:

- **Never open the hood while the engine is running.**
- **Do not touch muffler or exhaust pipes while they are hot; Severe burns could result.**

◆ **How to Open the Hood**

[F2690E, F2690]

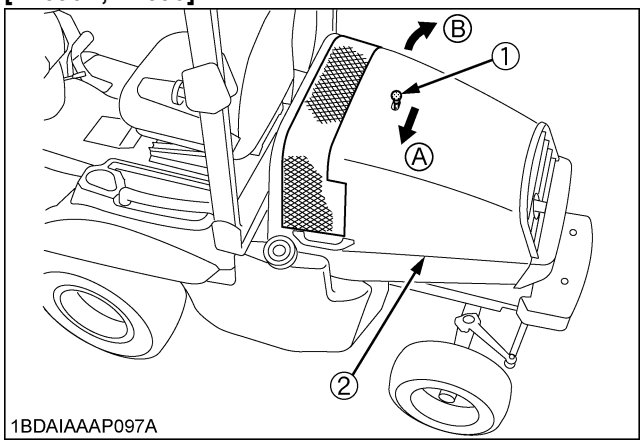

(1) Hood lock lever *(A) Pull the lever*
(2) Hood *(B) Open the hood*

[F3990]

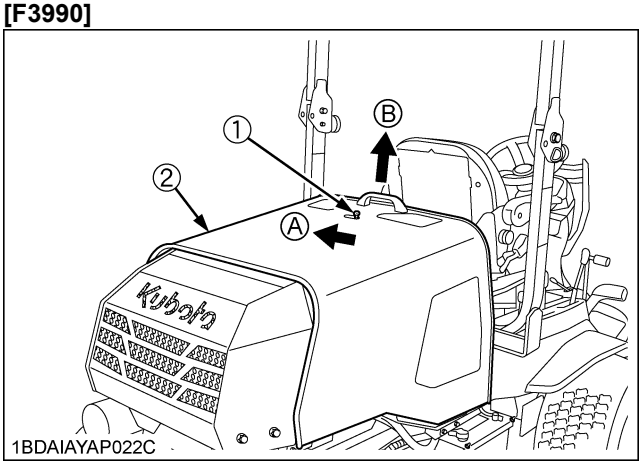

(1) Hood lock lever *(A) Pull the lever*
(2) Hood *(B) Open the hood*

To open:

1. Pull the lever.
2. Open the hood.

To close:

1. Close the hood.
2. Check the hood is locked.

https://truckmanualshub.com/

DAILY CHECK

To prevent trouble from occurring, it is important to know the condition of the machine. Check it before starting.

WARNING

To avoid serious injury:

- **Be sure to check and service the machine on a level surface with the engine shut off, the key removed and the parking brake securely set.**

	No.	Check item	Ref. Page
Walking around the machine	1	Tire pressure, wear and damage	37, 50
	2	Oil and water leak	---
	3	Engine oil level	47
	4	Transmission fluid level	51
	5	Coolant level in the recovery tank	51
	6	Damage to machine body, tightness of all bolts and nuts	---
	7	Radiator screen Bonnet screen	49
	8	Brake pedal	61
	9	Fuel level	48
	10	Air cleaner	59
	11	DPF Muffler [F3990 only]	52
While sitting in the operator's seat	1	Speed control pedal Brake pedal	---
	2	Parking brake	---
Turning the key switch "ON"	1	Performance of the easy checker light	32
Starting the engine	1	Color of the exhaust fumes	---
	2	Safety start switch and seat safety control. If either of these do not operate properly, contact your local KUBOTA Dealer immediately.	53, 54
	3	Check for abnormal noise and vibration.	---
Others	1	Check the areas where previous trouble was experienced.	---

■Checking Seat Belt and ROPS

1. Always check condition of the seat belt and ROPS attaching hardware before operating the machine.
2. Replace anything that is frayed or damaged.

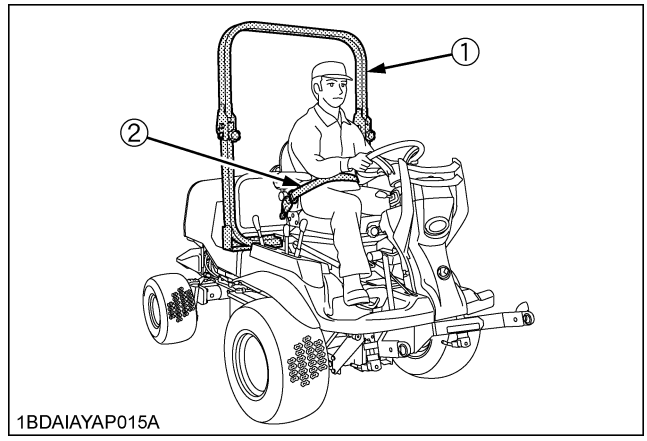

(1) ROPS
(2) Seat belt

https://truckmanualshub.com/

■Checking Engine Oil Level

WARNING

To avoid serious injury:

- **Always stop the engine and remove the key before checking oil.**

1. Check engine oil before starting and 5 minutes or more after the engine has stopped.
2. Wipe dipstick area clean.
3. To check the oil level, remove the dipstick, wipe it clean, replace it, and draw it out again. Check to see that the oil level is between the 2 notches.
4. Add new oil to the prescribed level at the oil port if necessary.
   There are 2 engine oil ports in F3990, therefore you can select the easy port to use.

[F2690E, F2690]

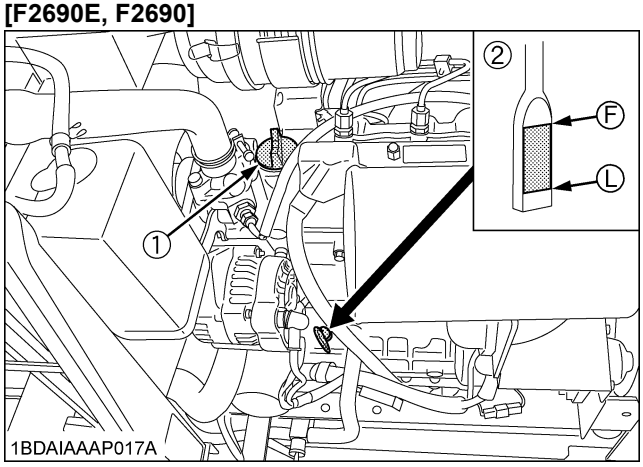

(1) Engine oil port *(F) "UPPER LEVEL"*
(2) Oil level dipstick *(L) "LOWER LEVEL"*

[F3990]

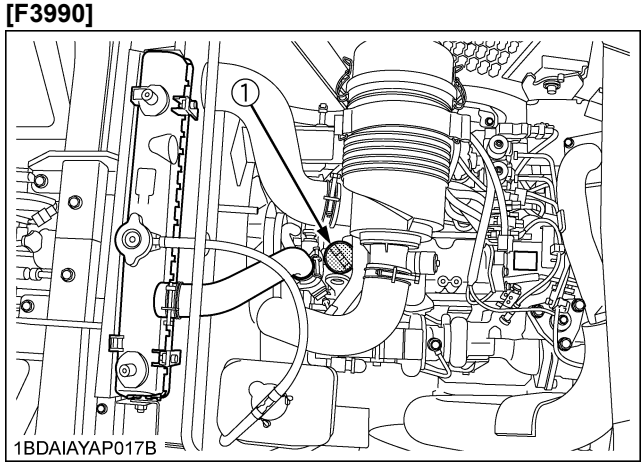

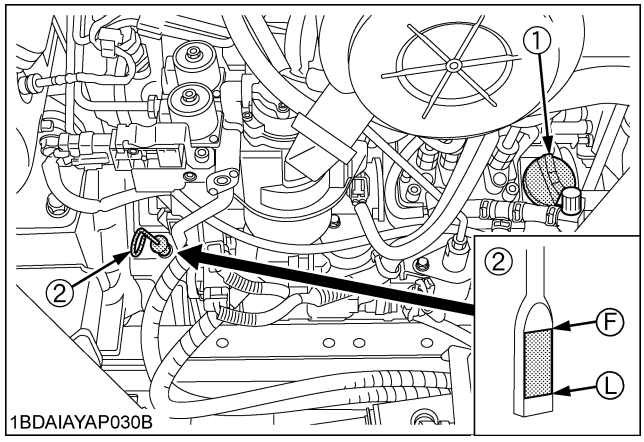

(1) Engine oil port *(F) "UPPER LEVEL"*
(2) Oil level dipstick *(L) "LOWER LEVEL"*

5. When using a different brand or viscosity oil from the previous one, remove all of the old oil and oil filter. Never mix 2 different types of oil.
6. Use the proper Engine Oil SAE according to the ambient temperatures. (See "LUBRICANTS, FUEL AND COOLANT" in "MAINTENANCE" section.)

https://truckmanualshub.com/

■Checking Amount of Fuel and Refueling

WARNING

To avoid serious injury:

- **Handle fuel carefully. If the engine is running, do not fill the fuel tank. If engine is hot, let engine cool several minutes before adding fuel. Do not smoke while filling the fuel tank or servicing the fuel system. Fill fuel tank only to bottom of filler neck.**

Check the fuel level. Take care that the fuel tank does not become empty.

Fuel tank capacity	61 L (16.1 U.S.gals.)

IMPORTANT :

- Use Diesel Fuel Only

1. Use No.2 diesel fuel.
2. Use No.1 diesel fuel if the temperature is below -10℃ (14℉).
3. Always use a strainer when refueling to prevent fuel injection pump contamination.

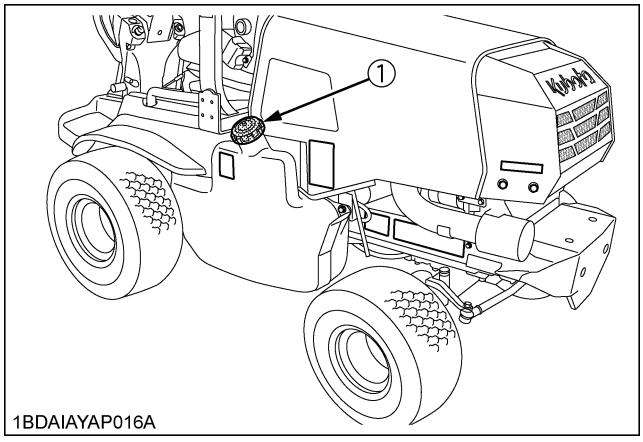

(1) Fuel port

IMPORTANT :

- Be sure to use Ultra Low Sulfur Fuel (S15).
- Do not permit dirt or trash to get into the fuel system.
- Be careful not to let the fuel tank become empty, otherwise air will enter the fuel system, this will require bleeding before next engine start.
- If the engine runs out of fuel and stalls, the engine components may be damaged.
- Be careful not to spill during refueling. If a spill should occur, wipe it off at once, or it may cause a fire.
- To prevent condensation (water) accumulation in the fuel tank, fill the tank before parking overnight.

https://truckmanualshub.com/

■Checking and Cleaning Radiator Screen and Bonnet Screen to Prevent Overheating

WARNING

To avoid serious injury:

- **Be sure to stop the engine and remove the key before cleaning.**

IMPORTANT :

- The air intake area must be clear of debris to prevent the engine from overheating.

Daily or after every 5 hours of operation, check to be sure the radiator screen and the bonnet screen are clean.
Dirt or chaff on the radiator screen or bonnet screen decrease cooling performance.

1. Remove the radiator screen and the bonnet screen, and remove all foreign material.
2. Remove the dust from between the fins and the tube.
3. Tighten the fan drive belt as necessary. For this, refer to "EVERY 100 HOURS" in "PERIODIC SERVICE" section.
4. If the scale forms in the tube, clean with the scale inhibitor or its equivalent.
5. Each time the bonnet screen is covered with grass during operation, rub it off the screen with the hand. Check the radiator screen from time to time if grass accumulates.

[F2690E, F2690]

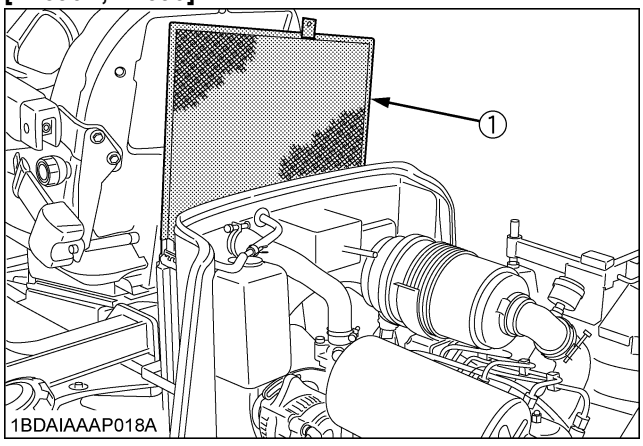

(1) Radiator screen

[F3990]

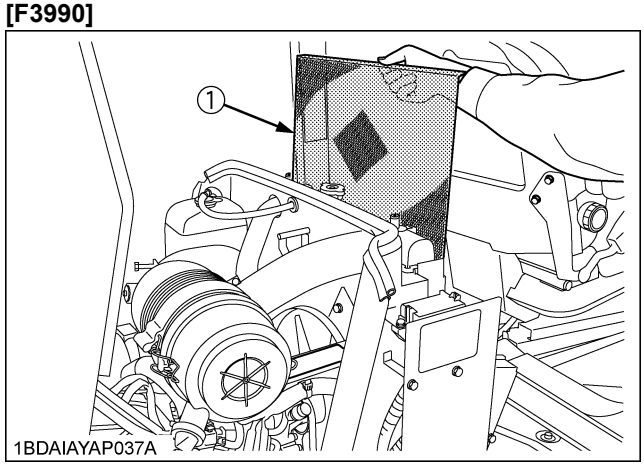

(1) Radiator screen

[F2690E, F2690]

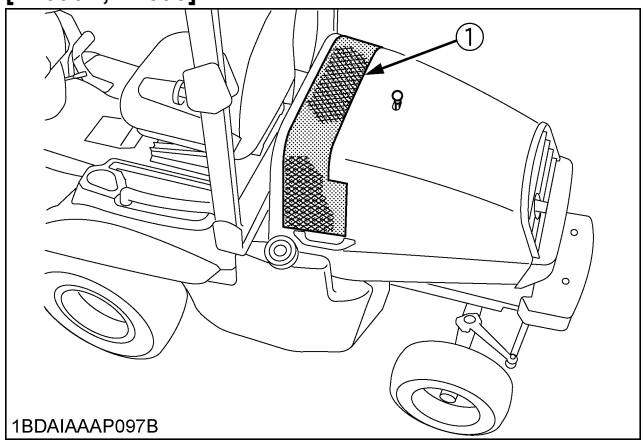

(1) Bonnet screen

[F3990]

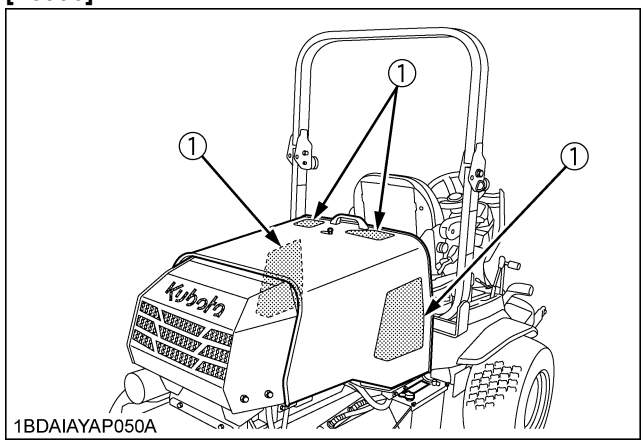

(1) Bonnet screen

https://truckmanualshub.com/

■Checking Tire Pressure

WARNING

To avoid serious injury:

- **Do not attempt to mount a tire on a rim. This should be done by a qualified person with the proper equipment.**
- **Always maintain the correct tire pressure.**
  Do not inflate tires above the recommended pressure shown in the Operator's Manual.
- **Never operate machine with a loose rim, wheel, or axle.**
  Whenever bolts are loosened, retighten to specified torque.
  Check all bolts frequently and keep them tightened.

◆ Inflation Pressure

Though the inflation pressure is factory-set to the prescribed level, it naturally drops slowly in the course of time. Thus, check it everyday and inflate as necessary.

		Tire sizes	Recommended Inflation Max. Pressure
Front	F2690E	23 x 10.5 - 12, 4PR	140 kPa (1.4 kgf/cm^2, 20 psi)
	F2690 F3990	24 x 12 - 12, 4PR	
Rear	F2690E	16 x 6.5 - 8, 4PR	190 kPa (1.9 kgf/cm^2, 28 psi)
	F2690 F3990	18 x 9.5 - 8, 4PR	250 kPa (2.5 kgf/cm^2, 36 psi)

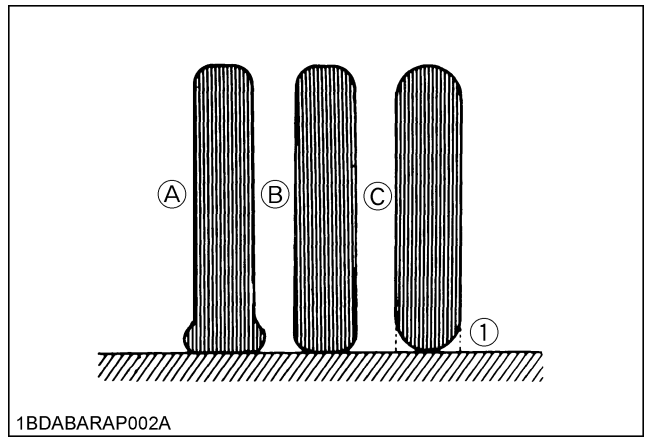

(1) Ground

(A) "INSUFFICIENT"
(B) "NORMAL"
(C) "EXCESSIVE"

https://truckmanualshub.com/

■Checking Transmission Fluid Level

1. Park the machine on a flat surface, lower the implement to the ground, shut off the engine and remove the key.
2. To check the oil level, draw out the dipstick, wipe it clean, replace it, and draw it out again. Check to see that the oil level lies between the 2 notches.
   If the level is too low, add new oil to the prescribed level at the oil inlet.
   (See "LUBRICANTS, FUEL AND COOLANT" in "MAINTENANCE" section.)

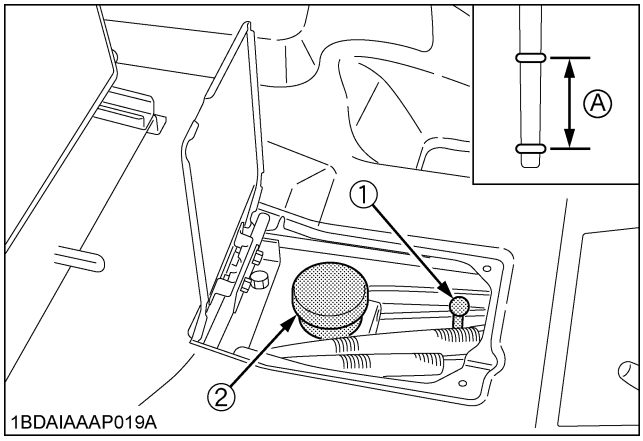

(1) Oil level dipstick
(2) Oil inlet
(A) Oil level is acceptable within this range.

IMPORTANT :
- If oil level is low, do not run the engine.

■Checking Coolant Level

WARNING

To avoid serious injury:
- **Do not remove the radiator cap when the engine is hot. Loosen cap slightly, to the stop, to relieve any excess pressure before removing cap completely.**

Check the coolant level daily both the radiator and the recovery tank before starting engine.

1. Remove the radiator cap and check to see that the coolant level is just below the fill port.
2. Check to see that the coolant level is between the "FULL" and "LOW" marks of recovery tank.
3. When the coolant level drops due to evaporation, add water only up to just below the fill port of the radiator and the full level of the recovery tank.
   In case of leakage, add anti-freeze and water in the specified mixing ratio up to the full level.
   (See "Flush Cooling System and Changing Coolant" in "EVERY 2000 HOURS or EVERY 2 YEARS" in "PERIODIC SERVICE" section.)

[F2690E, F2690]

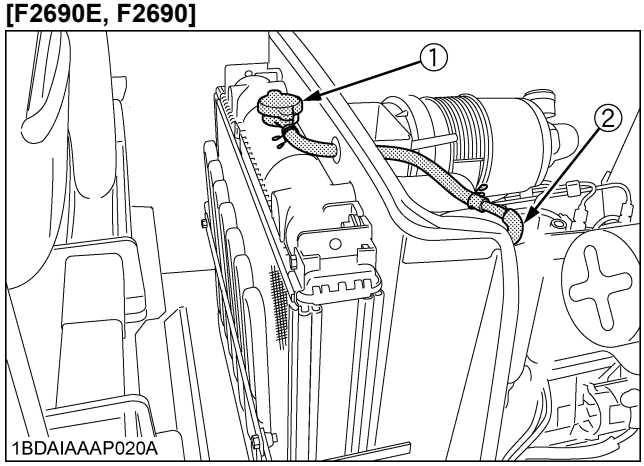

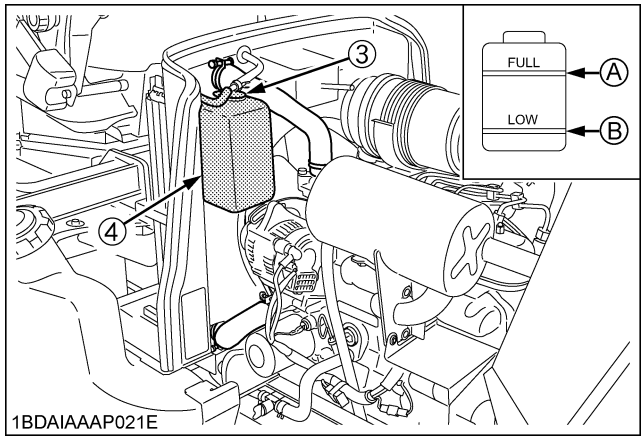

(1) Radiator cap
(2) Over flow pipe
(3) Recovery tank cap
(4) Recovery tank
(A) "FULL"
(B) "LOW"

[F3990]

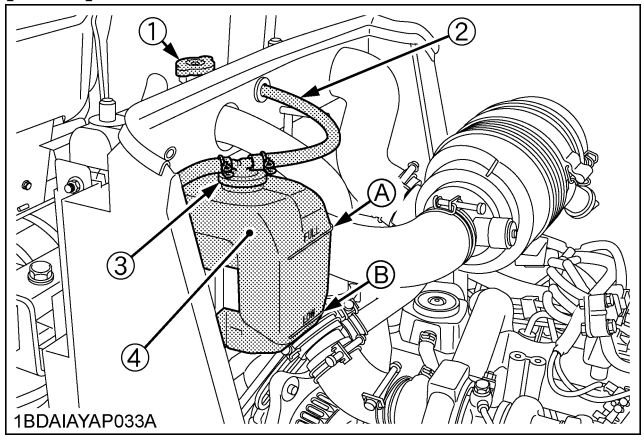

(1) Radiator cap
(2) Over flow pipe
(3) Recovery tank cap
(4) Recovery tank
(A) "FULL"
(B) "LOW"

https://truckmanualshub.com/

IMPORTANT :
- If the radiator cap has to be removed, follow the caution above and securely retighten the cap.
- Use clean, distilled water and anti-freeze to fill the radiator and the recovery tank.
- If water should leak, consult your local KUBOTA Dealer.

■Checking DPF Muffler

[F3990 only]

WARNING

To avoid serious injury:
- **Before checking or cleaning the DPF muffler, stop the engine and wait long enough until it is cooled down.**

Check the DPF muffler and its surroundings for build-up of anything flammable. Otherwise a fire may result.

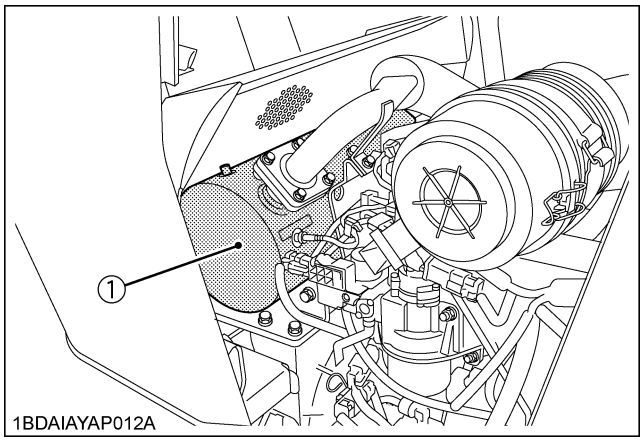

(1) DPF muffler

■Checking Movable Parts

If any of the movable parts, such as levers and pedals, is not smoothly moved because of rust or anything sticky, do not attempt to force it into motion.
In the above case, remove the rust or the sticky object, and apply oil or grease on the relevant spot.
Otherwise, the machine may get damaged.

https://truckmanualshub.com/

EVERY 50 HOURS

■Checking Engine Start System

The Engine Start System in your machine are designed to protect you while operating. Please check these Engine Start System periodically. It is recommended to check the Engine Start System before daily operation.

WARNING

To avoid serious injury:

- **Do not allow anyone near the machine while testing.**
- **If the machine does not pass one of the following tests, do not operate the machine. See your local KUBOTA Dealer.**
- **Sit on operator's seat for all tests except for Test1.**

IMPORTANT :

- Check the following tests before operating the machine.

Test 1: Switch for the operator's seat

1. Do not sit on the operator's seat.
2. Depress the brake pedal fully.
3. Shift the PTO lever to the "DISENGAGE" position.
4. Turn the key switch to the "START" position.
5. The engine must not crank.

Test 2: Switch for the brake pedal

1. Sit on the operator's seat.
2. Do not depress the brake pedal.
3. Shift the PTO lever to the "DISENGAGE" position.
4. Turn the key switch to the "START" position.
5. The engine must not crank.

Test 3: Switch for the PTO lever

1. Sit on the operator's seat.
2. Depress the brake pedal fully.
3. Shift the PTO lever to the "ENGAGE" position.
4. Turn the key switch to the "START" position.
5. The engine must not crank.

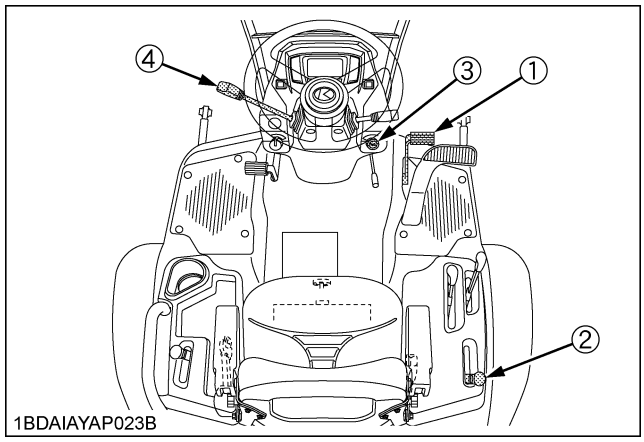

(1) Brake pedal
(2) PTO lever
(3) Key switch
(4) Throttle lever

https://truckmanualshub.com/

■Checking OPC System

The OPC (Operator Presence Control) system in your machine are designed to protect you while operating. Please check these OPC system periodically. It is recommended to check the OPC system before daily operation.

WARNING

To avoid serious injury:

- **Do not allow anyone near the machine while testing.**
- **If the machine does not pass one of the following tests, do not operate the machine. See your local KUBOTA Dealer.**

IMPORTANT :

- Check the following tests before operating the machine.

Test 1:

1. Start the engine.
2. Shift the PTO lever to the "DISENGAGE" position.
3. Release the brake pedal.
4. Stand up. (DO NOT GET OFF THE MACHINE.)
5. The engine must shut off.

Test 2:

1. Start the engine.
2. Shift the PTO lever to the "ENGAGE" position.
3. Release the brake pedal.
4. Stand up. (DO NOT GET OFF THE MACHINE.)
5. The engine must shut off.

Test 3:

1. Start the engine.
2. Depress the brake pedal fully and lock the parking brake.
3. Shift the PTO lever to the "ENGAGE" position.
4. Stand up. (DO NOT GET OFF THE MACHINE.)
5. The engine must shut off.

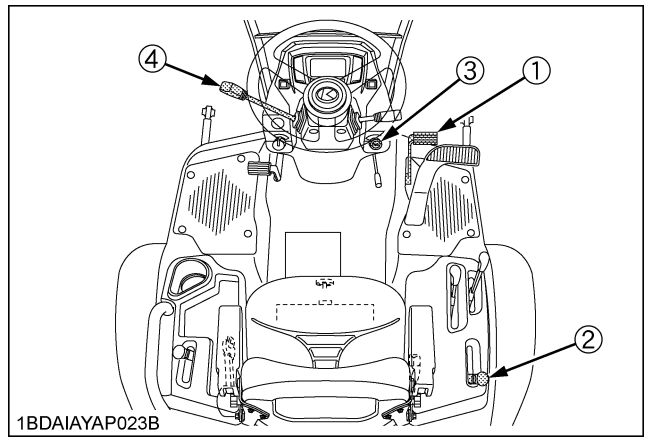

(1) Brake pedal
(2) PTO lever
(3) Key switch
(4) Throttle lever

■Lubricating All Grease Fittings

WARNING

To avoid serious injury:

- **Be sure to stop the engine and remove the key before greasing.**

Grease the following location.

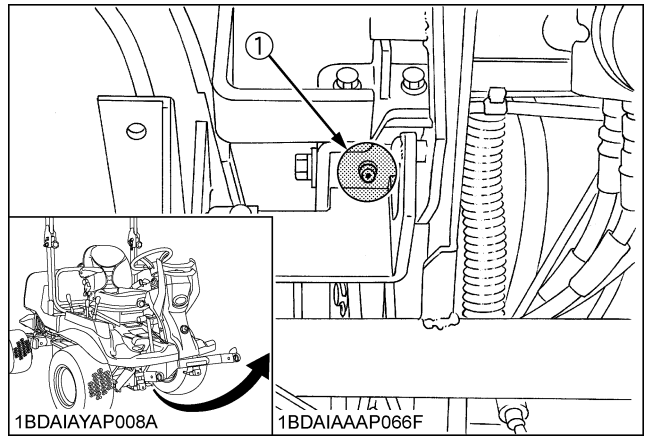

(1) Speed control pedal shaft

https://truckmanualshub.com/

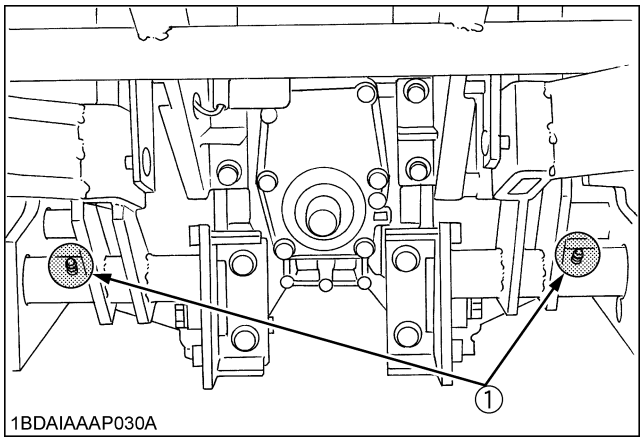

(1) Lift link boss (RH & LH)

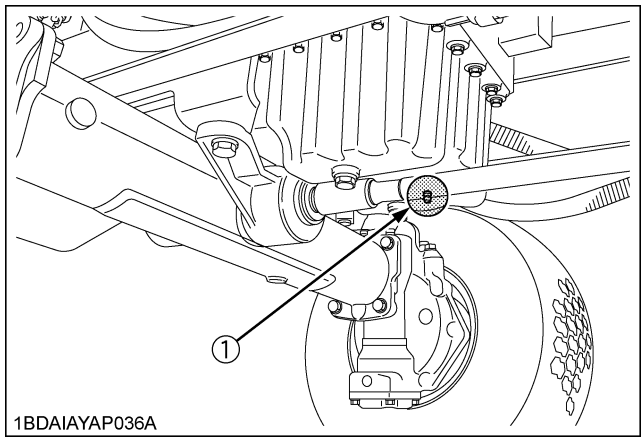

(1) Rear wheel drive shaft (4WD) (Rear side)

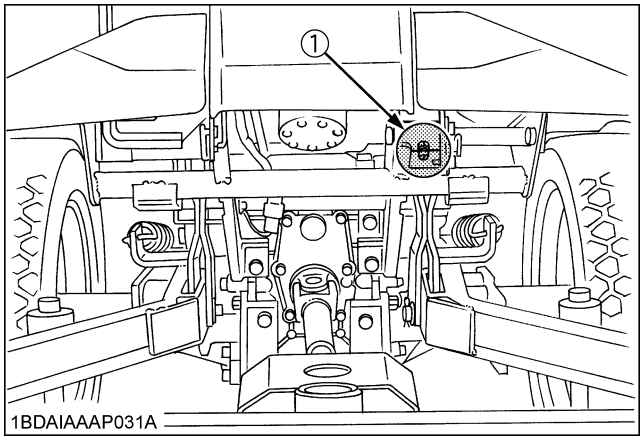

(1) Differential lock pedal boss

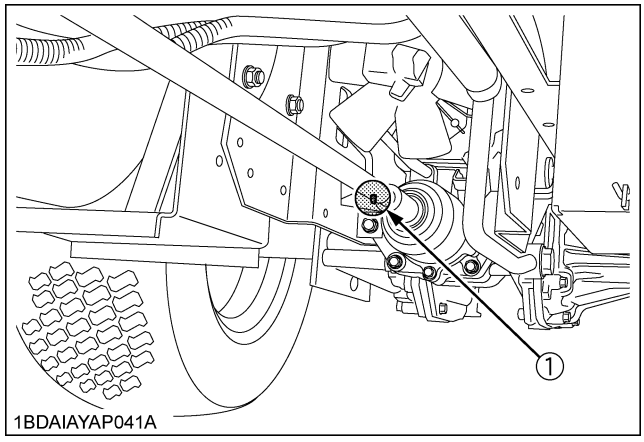

(1) Rear wheel drive shaft (4WD) (Front side)

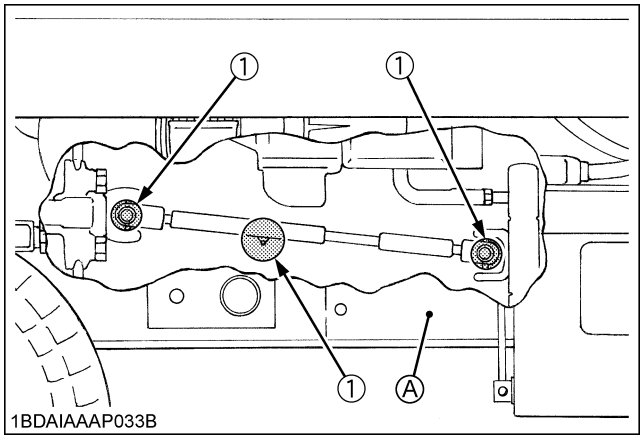

(1) Universal joint *(A) Frame*

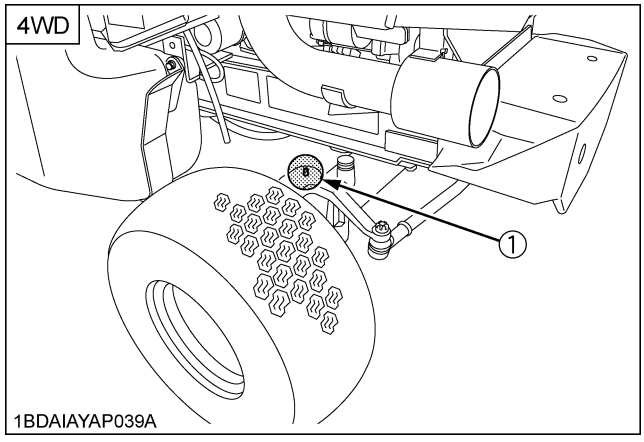

(1) Knuckle arm (Left)

NOTE :

- Apply grease to the indicated points of the universal joint that is inside of the frame.

https://truckmanualshub.com/

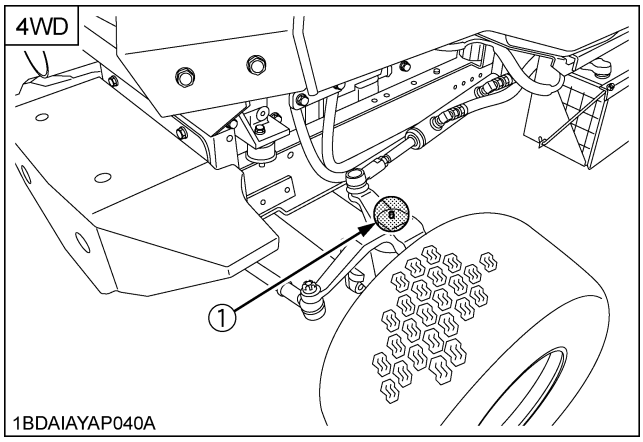

(1) Knuckle arm (Right)

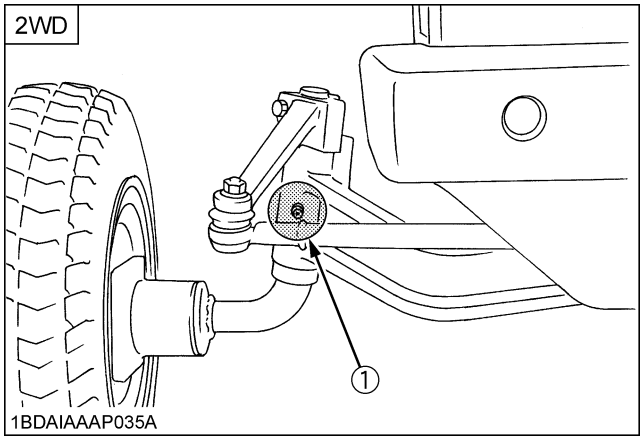

(1) King pin (LH, RH)

■Oiling

WARNING

To avoid serious injury:

- **Be sure to stop the engine and remove the key before oiling.**

Oil the following locations.

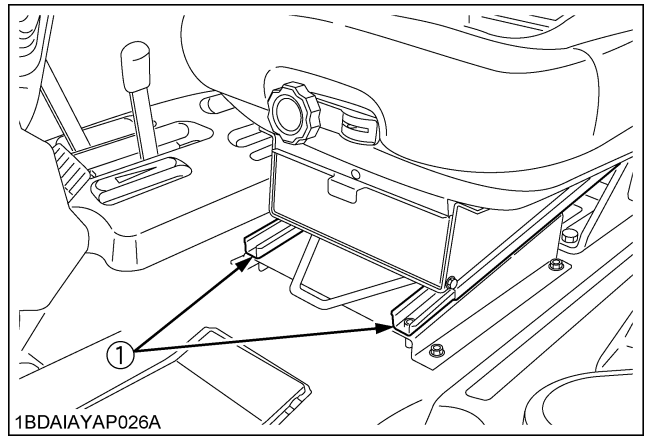

(1) Seat adjuster

[F2690E, F2690]

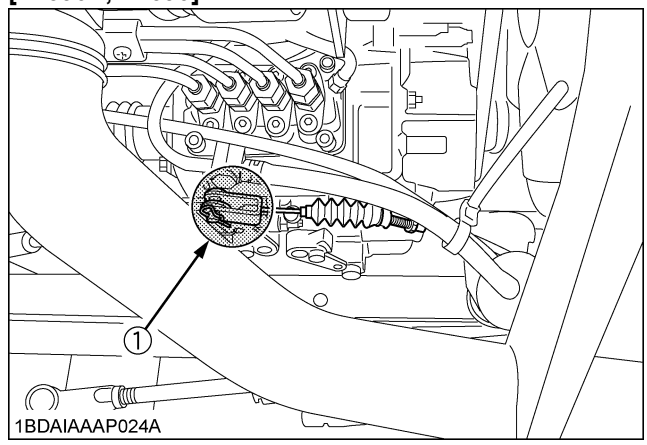

(1) Throttle cable

https://truckmanualshub.com/

■Checking Wheel Bolt Torque

WARNING

To avoid serious injury:

- **Never operate machine with a loose rim, wheel, or axle.**
- **Any time bolts and nuts are loosened, retighten to specified torque.**
- **Check all bolts and nuts frequently and keep them tight.**

Check wheel bolts and nuts regularly especially when new. If they are loose, tighten them as follows.

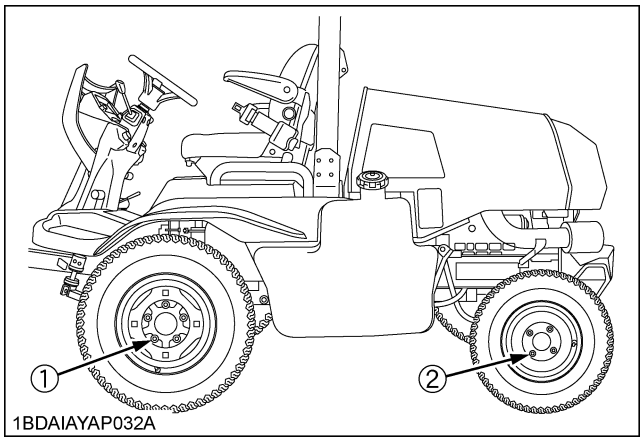

(1) Nut: 48.1 to 55.9 N-m (4.9 to 5.7 kgf-m, 35.5 to 41.2 lbf-ft)
(2) Nut: 69.0 to 73.0 N-m (7.0 to 7.4 kgf-m, 50.9 to 53.8 lbf-ft)

EVERY 100 HOURS

■Checking Battery Condition

DANGER

To avoid the possibility of battery explosion:
For the refillable type battery, follow the instructions below.

- **Do not use or charge the refillable type battery if the fluid level is below the LOWER (lower limit level) mark. Otherwise, the battery component parts may prematurely deteriorate, which may shorten the battery's service life or cause an explosion. Check the fluid level regularly and add distilled water as required so that the fluid level is between the UPPER and LOWER levels.**

DANGER

To avoid serious injury or death:

- **When the battery is being activated, hydrogen and oxygen gases in the battery are extremely explosive. Keep open sparks and flames away from the battery at all times, especially when charging the battery.**

WARNING

To avoid serious injury:

- **Batteries, battery posts, terminals and related accessories contain lead and lead compounds, and other chemicals known to the State of California to cause cancer and birth defects or other reproductive harm. WASH HANDS AFTER HANDLING.**
- **Never remove the battery cap while the engine is running.**
- **Keep electrolyte away from eyes, hands and clothes. If you come in contact with the electrolyte, wash it away completely with water immediately and get medical attention.**
- **Keep open sparks and flames away from the battery at all times. Hydrogen gas mixed with oxygen becomes very explosive.**
- **Wear eye protection and rubber gloves when working around battery.**

The factory-installed battery is of non-refillable type.
If the battery is weak, charge the battery or replace it with new one.

https://truckmanualshub.com/

Mishandling the battery shortens the service life and adds to maintenance costs.
The original battery is maintenance free, but needs some servicing.
If the battery is weak, the engine will be difficult to start and the lights will be dim. It is important to check the battery periodically.

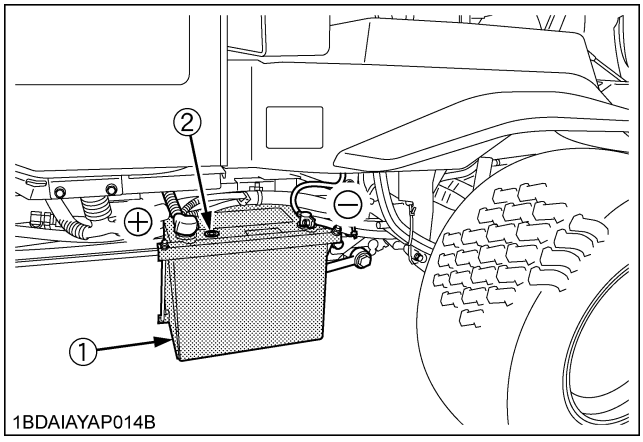

(1) Battery
(2) Indicator

◆ **How to read the indicator**

Check the battery condition by reading the indicator.

State of indicator display	
Green	Specific gravity of electrolyte and quality of electrolyte are both in good condition.
Black	Needs charging battery.
White	Needs replacing battery.

◆ **Battery Charging**

DANGER

To avoid serious injury or death:

- **When the battery is being activated, hydrogen and oxygen gases in the battery are extremely explosive. Keep open sparks and flames away from the battery at all times, especially when charging the battery.**

WARNING

To avoid serious injury:

- **When charging the battery, ensure the vent caps are securely in place. (if equipped)**
- **When disconnecting the cable from the battery, start with the negative terminal first.**
  When connecting the cable to the battery, start with the positive terminal first.
- **Never check battery charge by placing a metal object across the posts.**
  Use a voltmeter or hydrometer.

1. To slow charge the battery, connect the battery positive terminal to the charger positive terminal and the negative to the negative, then recharge in the standard fashion.
2. A boost charge is only for emergencies. It will partially charge the battery at a high rate and in a short time.
   When using a boost-charged battery, it is necessary to recharge the battery as early as possible.
   Failure to do this will shorten the battery's service life.
3. The battery is charged if the indicator display turns green from black.
4. When exchanging an old battery for a new one, use battery of equal specification shown in **table 1**.

[TABLE 1]

Battery Type	Volts (V)	Capacity at 5 H.R (Ah)	Reserve Capacity (min)	Cold Cranking Amps	Normal Charging Rate (A)
80D26R	12	55	133	582	5.5

◆ **Direction for Storage**

1. When storing the machine for a long period, remove the battery from machine, adjust the electrolyte to the proper level and store in a dry place out of direct sunlight.
2. The battery self-discharges while it is stored.
   Recharge it once every 3 months in hot seasons and once every 6 months in cold seasons.

https://truckmanualshub.com/

■Cleaning Air Cleaner Element

1. Remove the element.
2. Clean the element:
   (1) When dry dust adheres to the element, blow compressed air from the inside turning the element. Pressure of compressed air must be under 205kPa (2.1kgf/cm^2, 30psi).
   (2) When carbon or oil adheres to the element, soak the element in detergent for 15 minutes, and then wash it several times in water, rinse with clean water and dry it naturally.
   (3) After element is fully dried, inspect the inside of the element with a light and check if it is damaged or not. (referring to the instructions on the label attached to the case.)
3. Replace the air cleaner element every 1000 hours or every 1 year whichever comes faster.

[F2690E, F2690]

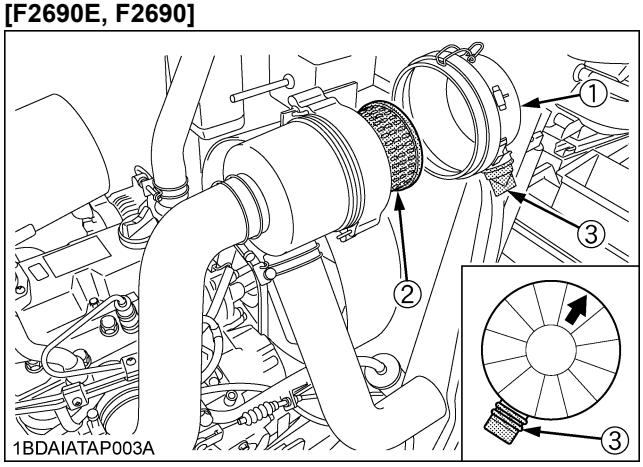

(1) Cover
(2) Element
(3) Evacuator valve

[F3990]

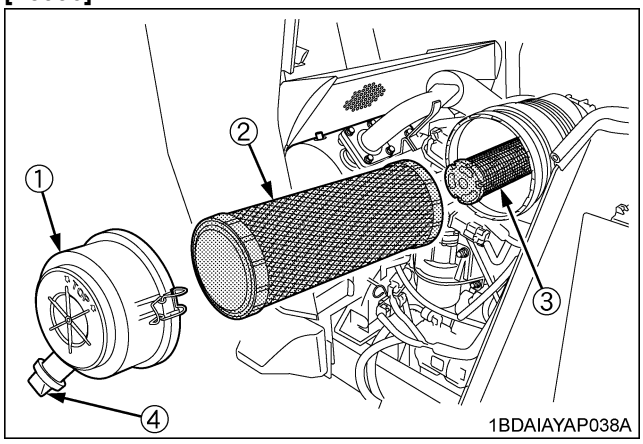

(1) Cover
(2) Primary element
(3) Secondary element
(4) Evacuator valve

IMPORTANT :
- The air cleaner uses a dry element. Never apply oil.
- Do not run the engine with the filter element removed.
- Be sure to refit the dust cup with the arrow ⬆ (on the rear) upright. If the dust cup is improperly fitted, dust passes by the baffle and directly adheres to the element.

https://truckmanualshub.com/

■Checking Fuel Filter

WARNING

To avoid serious injury:

- **Be sure to stop the engine and remove the key when attempting to make the following checks and changes.**
- **Never fail to check the fuel lines periodically. The fuel lines are subject to wear and aging. Fuel may leak out onto the running engine, causing a fire.**

1. The fuel line is made of rubber and ages regardless of service period.
2. If the fuel line and clamps are found to be damaged or deteriorated, replace them.
3. Check fuel filter, if it is clogged by debris or contaminated with water, replace it.

IMPORTANT :

- When the fuel line is disconnected for maintenance or repair, close both ends of the fuel line with a piece of clean cloth or paper to prevent dust and dirt from entering. In addition, particular care must be taken not to admit dust and dirt into the fuel pump. Entrance of even a small amount dust or dirt cause premature wear and malfunction of the fuel pump and injector components.

[F2690E, F2690]

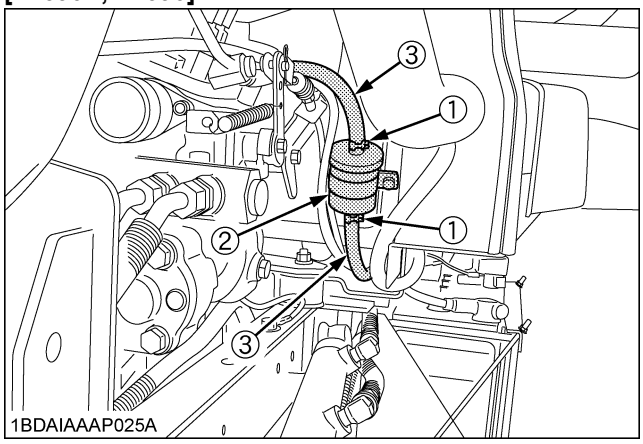

(1) Hose clamp
(2) Fuel filter
(3) Fuel line

[F3990]

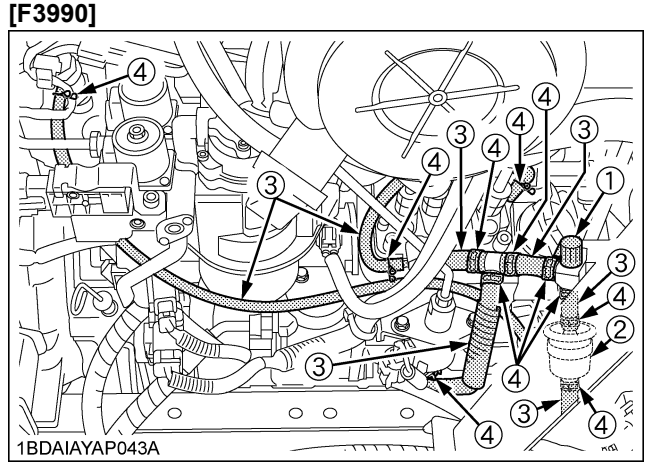

(1) Fuel valve
(2) Fuel filter
(3) Fuel line
(4) Hose clamp

[F2690E, F2690, F3990]

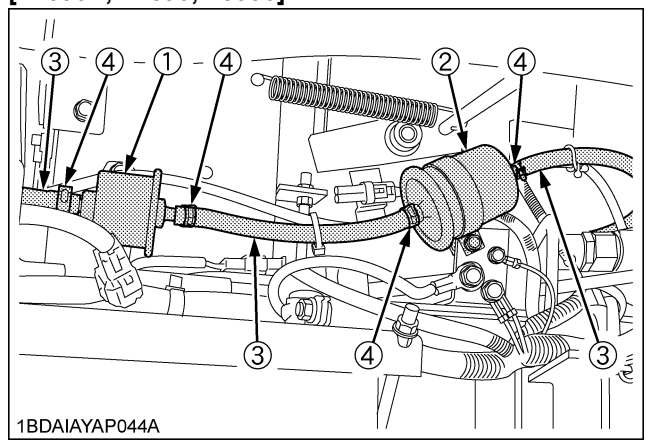

(1) Fuel pump
(2) Fuel filter
(3) Fuel line
(4) Hose clamp

[F2690E, F2690, F3990]

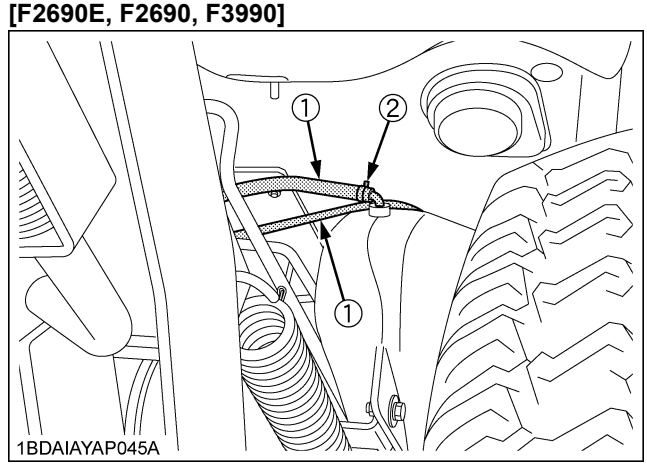

(1) Fuel line
(2) Hose clamp

https://truckmanualshub.com/

■Checking and Adjusting Brake Pedal

WARNING

To avoid serious injury:

- **Park the machine on a firm and level surface.**
- **Stop the engine and chock the wheels before checking the brake pedal.**

Proper brake pedal free travel	20 to 40mm (0.8 to 1.6 in.) on the pedal

NOTE :

- If the turn assist brake device is attached, adjust the brake pedal. (See Instruction manual for Turn Assist Brake Pedals.)
- If the speed set device is attached, remove the speed set release rod before adjusting, and replace it after adjusting. (See Instruction manual for Cruise Control.)

1. Release the parking brake.
2. Slightly depress the brake pedal and measure free travel at the top of pedal stroke.
3. If adjustment is needed, loosen the lock nut and turn the turnbuckle to adjust the rod length within acceptable limits.
4. Retighten the lock nut.

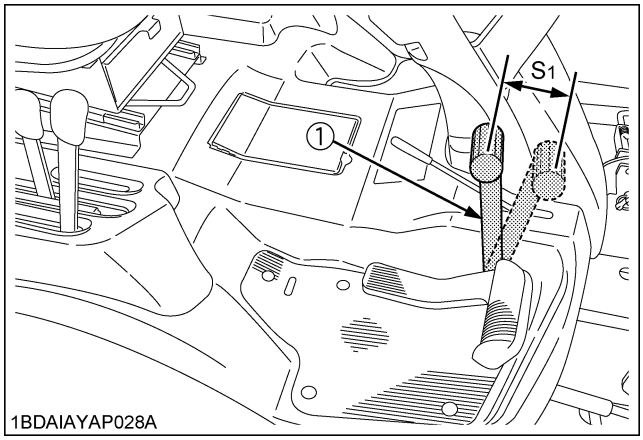

(1) Brake pedal *(S_1) Free travel*

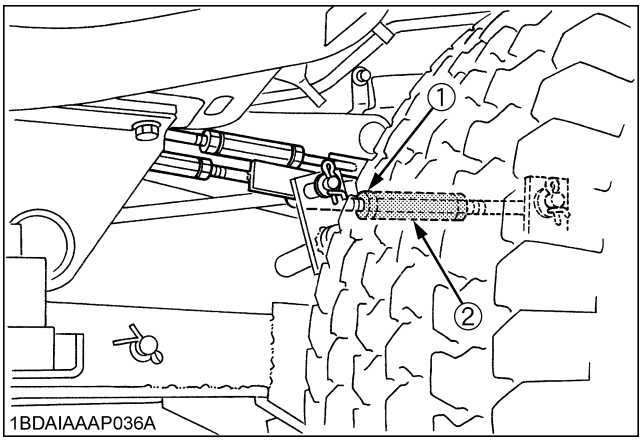

(1) Lock nut
(2) Turnbuckle

https://truckmanualshub.com/

ENGLISH

■Checking Fan Drive Belt Tension

WARNING

To avoid serious injury:

- **When making adjustments, park the machine on a level surface, apply the parking brake, stop the engine and remove the key.**

Proper fan belt tension	A deflection between 9 to 11 mm (0.35 to 0.43 in.) when the belt is pressed in the middle of the span.

1. Stop the engine and remove the key.
2. Apply moderate thumb pressure to the belt between pulleys.
3. If tension is incorrect, loosen the alternator mounting bolts and, using a lever placed between the alternator and the engine block, pull the alternator out until the deflection of the belt falls within the acceptable limits.
4. Replace the fan belt if it is damaged.

Moderate belt tension:
The belt should deflect approx. 10 mm (0.4 in.) when the center of the belt is depressed with finger pressure of 98N (10 kgf, 22 lbf).

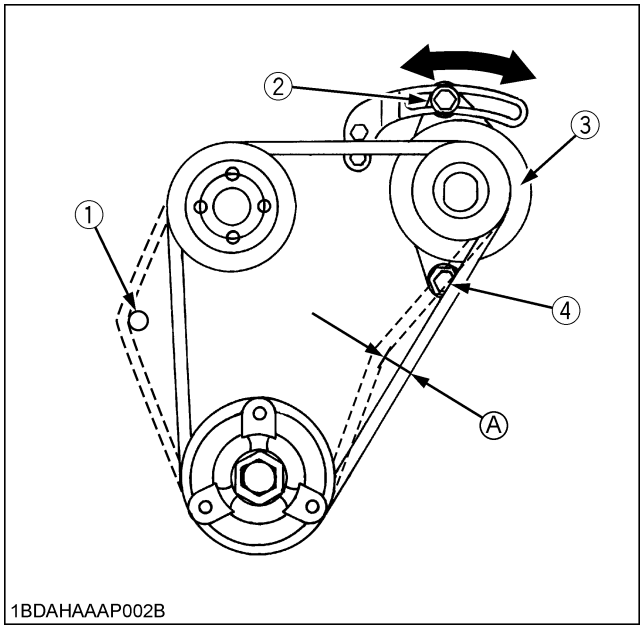

(1) Cap
(2) Tension bolt
(3) Alternator
(4) Adjusting bolt
(A) 10 mm (0.4 in.)

IMPORTANT :

- When replacing the fan drive belt, be careful not to catch it on the cap under the water pump.

EVERY 200 HOURS

■Changing Engine Oil

WARNING

To avoid serious injury:

- **Be sure to stop the engine and remove the key before changing the oil.**
- **Allow engine to cool down sufficiently; oil can be hot and may cause burns.**

Oil capacity with filter	F2690E, F2690	3.5 L (3.7 U.S.qts.)
	F3990	4.7 L (5.0 U.S.qts.)

1. To drain the used oil, remove the drain plug at the bottom of the engine and drain the oil completely into the oil pan.
   All the used oil can be drained out easily when the engine is still warm.
2. After draining reinstall the drain plug.
3. Fill with the new oil up to the center on the dipstick, between the upper and lower notch.
   (See "LUBRICANTS, FUEL AND COOLANT" in "MAINTENANCE" section.)

[F2690E, F2690]

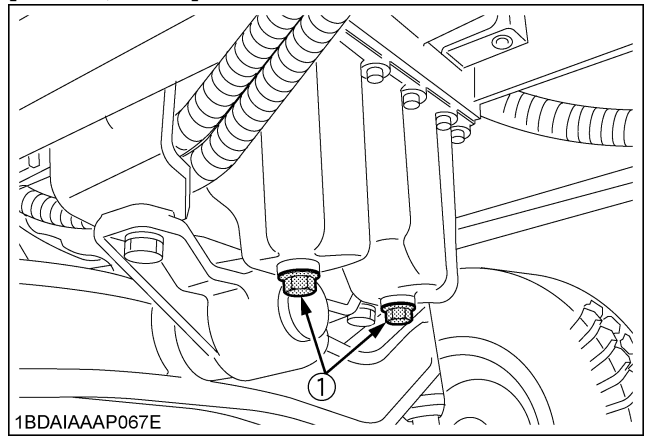

(1) Drain plug

https://truckmanualshub.com/

[F3990]

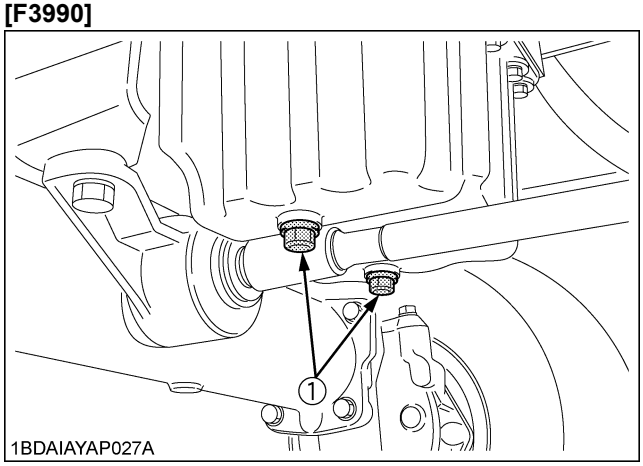

(1) Drain plug

■Replacing Engine Oil Filter Cartridge

WARNING

To avoid serious injury:

- **Be sure to stop the engine and remove the key before changing the oil and the oil filter cartridge.**
- **Allow engine to cool down sufficiently; oil can be hot and may cause burns.**

1. Remove the oil filter.
2. Put a film of engine oil on the rubber seal of the new filter.
3. Tighten the filter quickly until it contacts the mounting surface.
4. Tighten the filter by hand an additional 1/2 turn only.
5. After the new filter is replaced, the engine oil normally decreases a little. Check that the engine oil does not leak through the seal and be sure to check the oil level on the dipstick.
6. Then, replenish the engine oil up to the prescribed level.

[F2690E, F2690]

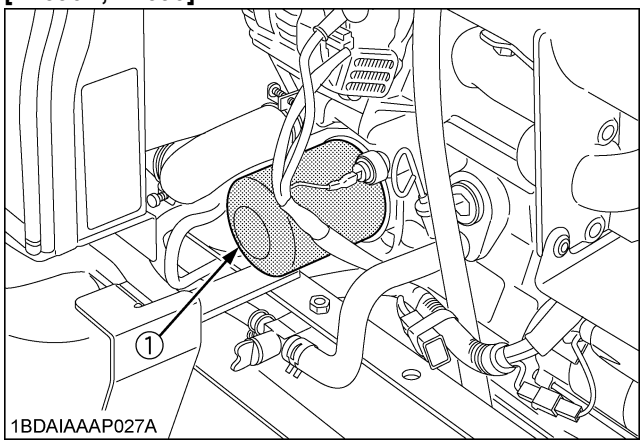

(1) Engine oil filter cartridge

[F3990]

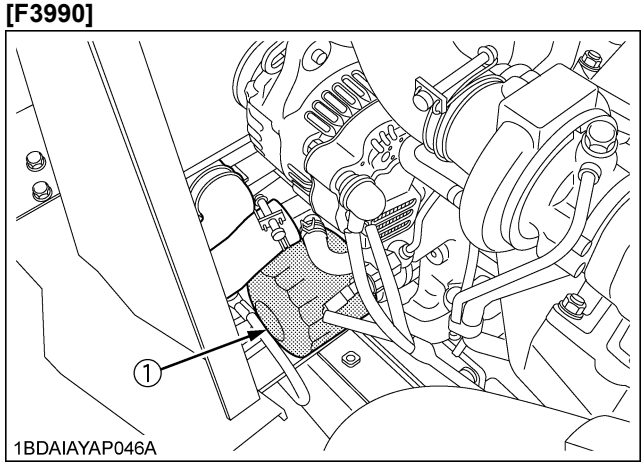

(1) Engine oil filter cartridge

IMPORTANT :

- To prevent serious damage to the engine, use only a genuine KUBOTA filter.

https://truckmanualshub.com/

■Replacing Transmission Oil Filter Cartridge

WARNING

To avoid serious injury:

- **Be sure to stop the engine and remove the key before changing the oil filter cartridge.**
- **Allow transmission case to cool down sufficiently; oil can be hot and may cause burns.**

1. The oil filter cartridge must be changed every 200 service hours.

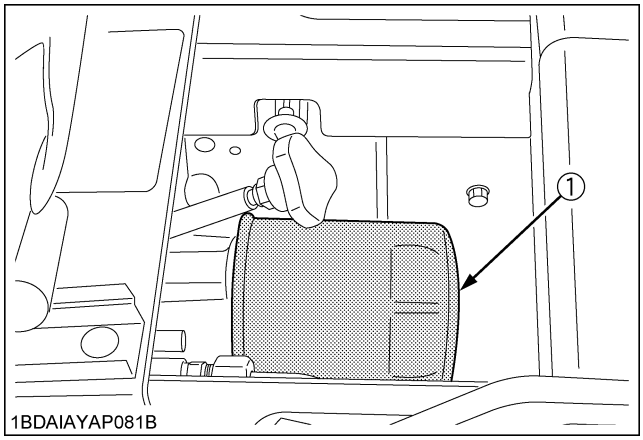

(1) Oil filter cartridge

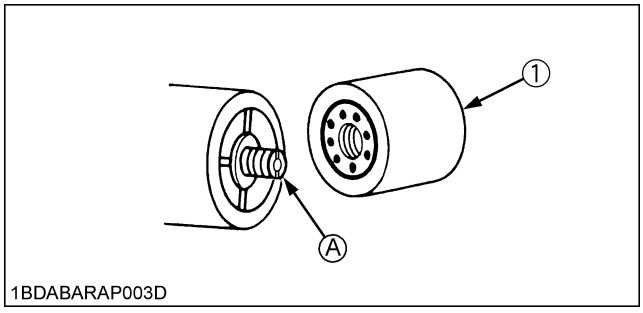

(1) Oil filter cartridge *(A) Screw*

2. Remove the oil filter cartridge by using the filter wrench.
3. Apply a slight coat of oil onto the cartridge gasket.
4. To install the new cartridge, screw it in by hand. Over tightening may cause deformation of the rubber gasket.
5. After the new cartridge is replaced, the transmission fluid level normally decreases a little. Add fluid if necessary.
6. Check for oil leaks around the filter gasket.

IMPORTANT :

- To prevent serious damage to a hydraulic system, replace a highly efficient, 10 μm filter. Use only a genuine KUBOTA filter.
- When using the auxiliary hydraulics, replace the filter cartridge after initial 50 service hours of operation.

EVERY 400 HOURS

■Changing Transmission Fluid

WARNING

To avoid serious injury:

- **Be sure to stop the engine and remove the key before changing or checking the oil.**
- **Allow transmission case to cool down sufficiently; oil can be hot and may cause burns.**

The fluid in the transmission case is also used for the hydrostatic drive system.

1. To drain oil, remove the drain plug at the bottom of the transmission case and drain oil completely into the oil pan.
2. After draining, reinstall the drain plug.
3. Fill with the new KUBOTA SUPER UDT fluid up to the upper notch on the dipstick.
   (See "LUBRICANTS, FUEL AND COOLANT" in "MAINTENANCE" section.)
4. After running the engine for a few minutes, stop it and check the oil level again; add oil to the prescribed level.

Oil capacity	14 L (14.8 U.S.qts.)

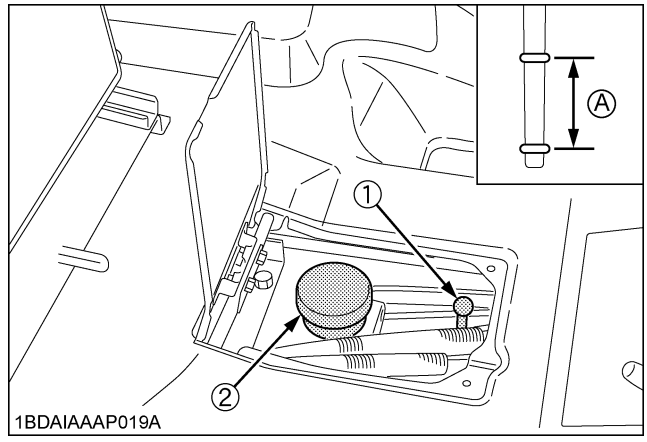

(1) Oil level dipstick *(A) Oil level is acceptable within this range.*
(2) Oil inlet

https://truckmanualshub.com/

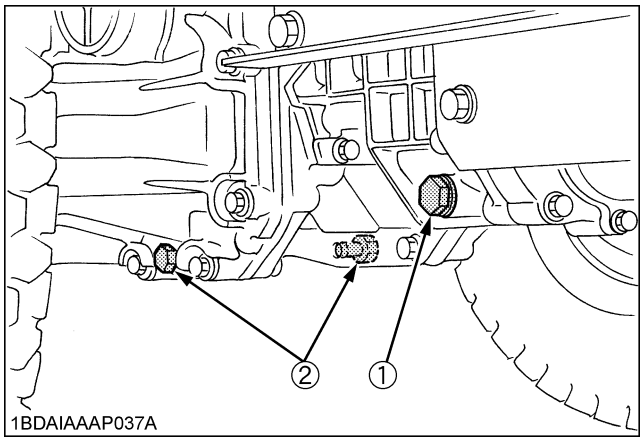

(1) Drain plug (LH)
(2) Drain plugs (Both sides)

IMPORTANT :
- Do not operate the machine immediately after changing the transmission fluid.
- Run the engine at medium speed for a few minutes to prevent damage to the transmission.

■Cleaning Transmission Strainer

When changing the transmission fluid, remove and clean completely the oil strainers with kerosene. Be careful not to damage the strainer parts when installing.

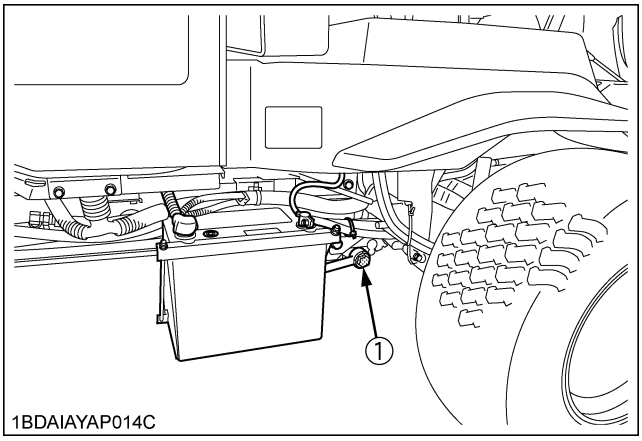

(1) Strainer

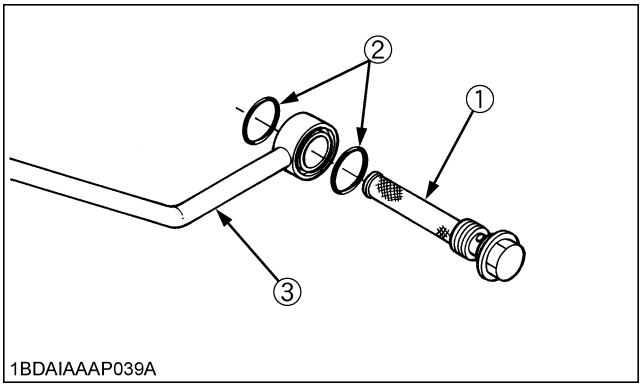

(1) Strainer
(2) O ring
(3) Suction pipe

IMPORTANT :
- The fine filings in the oil could injure the component parts of the hydraulic system, it has been precision build to withstand high pressure that the suction line end is provided within an oil strainer.

https://truckmanualshub.com/

■Changing Rear Axle Differential Case Fluid [4WD]

(See "LUBRICANTS, FUEL AND COOLANT" in "MAINTENANCE" section.)

Remove the drain and filling port plug. After draining, replace the drain plug and fill with new oil.

Oil capacity	1.5 L (1.6 U.S.qts.)

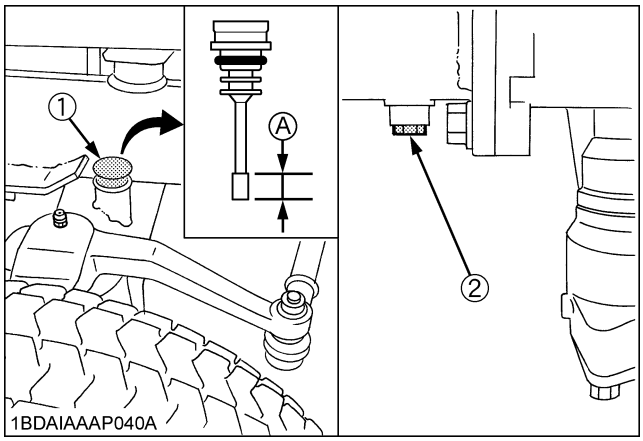

(1) Filling plug with dipstick
(2) Drain plug
(A) Oil level is acceptable within the range.

■Changing Rear Axle Gear Case Fluid [4WD]

(RIGHT AND LEFT) (See "LUBRICANTS, FUEL AND COOLANT" in "MAINTENANCE" section.)

1. To check the oil level, remove the check plug (bolt).
   - Place the mower on a level surface.
     Loosen the check plug. Oil should be visible through the opening. If the oil level is too low or high, adjust it.
2. To change gear oil, remove the drain and filling port plug with the hex head wrench to drain the used oil. After draining, replace the drain plug and fill with new oil.

Oil capacity	0.5 L (0.5 U.S.qts.)

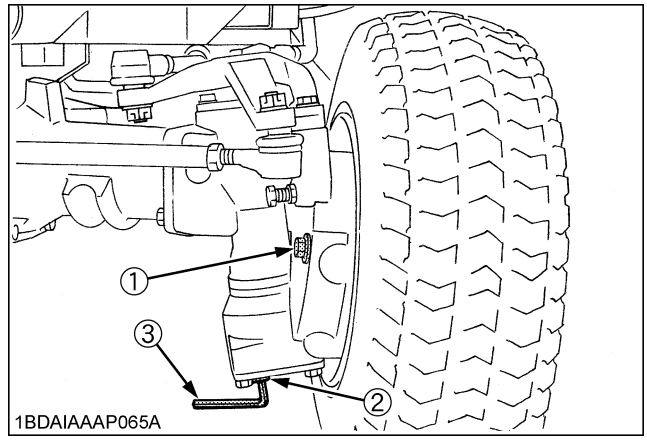

(1) Filling and checking port plug
(2) Drain plug
(3) Hex head wrench

https://truckmanualshub.com/

■Adjusting Rear Axle Pivot

If the rear axle pivot pin adjustment is not correct, rear wheel vibration can occur causing vibration in the steering wheel.

◆ **Adjusting procedure**

Loosen the lock nut, tighten adjusting screw all the way, and then loosen the screw by 1/6 turn.
Retighten the lock nut.

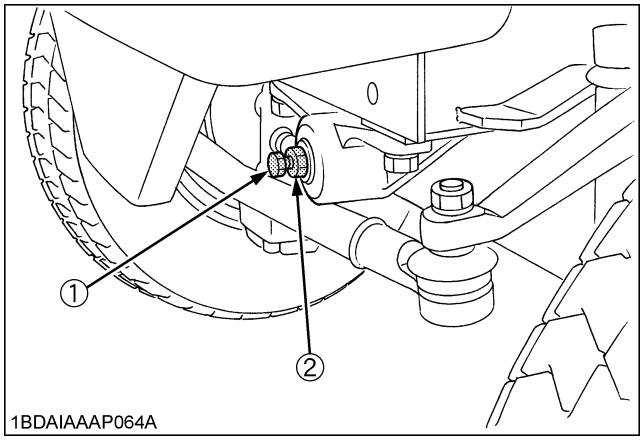

(1) Adjusting screw
(2) Lock nut

■Replacing Fuel Filter

Change fuel filter every 400 hours. This should be done by your local KUBOTA Dealer.

EVERY 800 HOURS

■Adjusting Engine Valve Clearance

Consult your local KUBOTA Dealer for this service.

EVERY 1000 HOURS or EVERY 1 YEAR

■Replacing Air Cleaner Primary Element and Secondary Element

(See "Cleaning Air Cleaner Element" in "EVERY 100 HOURS" in "PERIODIC SERVICE" section.)

IMPORTANT :

- To prevent serious damage to the engine, use only a KUBOTA genuine filter.

■Checking Exhaust manifold

[F3990 only]

Consult your local KUBOTA Dealer for this service.

EVERY 1500 HOURS

■Checking Fuel Injection Nozzle (Injection Pressure)

Consult your local KUBOTA Dealer for this service.

https://truckmanualshub.com/

EVERY 2000 HOURS or EVERY 2 YEARS

Be sure to do the following service once every 2000 hours or every 2 years whichever comes faster.

■Flush Cooling System and Changing Coolant

WARNING

To avoid serious injury:

- **Do not remove the radiator cap when the engine is hot. Then loosen cap slightly to the stop to relieve any excess pressure before removing cap completely.**

1. Stop the engine and let it cool down.
2. To drain the coolant, remove the drain plug, and then the radiator cap. The radiator cap must be removed to completely drain the coolant.

[F2690E, F2690]

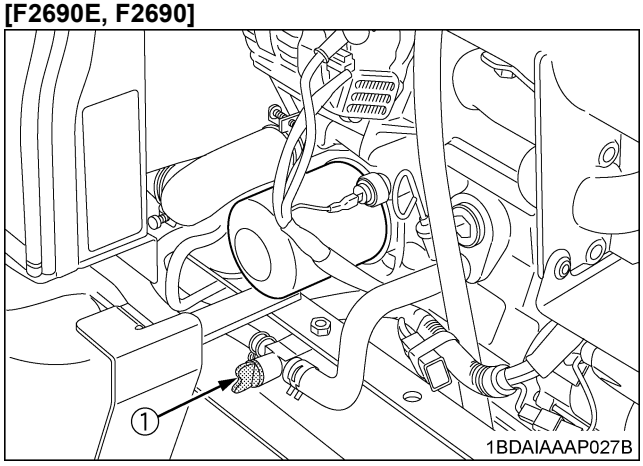

(1) Drain plug

[F3990]

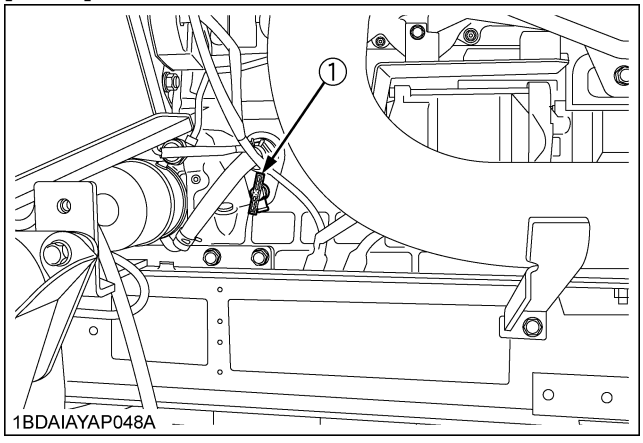

(1) Drain plug

3. After all coolant is drained, install the drain plug.
4. Fill with clean water and cooling system cleaner.
5. Follow directions of the cleaner instruction.
6. After flushing, fill with clean water and anti-freeze until the coolant level is just below the fill port on the radiator.
   Install the radiator cap securely.
7. Fill with coolant up to the "FULL" mark on the recovery tank.
8. Start and operate the engine for a few minutes.
9. Stop the engine and let it cool down.
10. Check coolant level of recovery tank and add coolant if necessary.

[F2690E, F2690]

Coolant capacity	4.6 L (4.9 U.S.qts.)
Recovery tank capacity	0.6 L (0.6 U.S.qts.)

[F3990]

Coolant capacity	3.7 L (3.9 U.S.qts.)
Recovery tank capacity	1.1 L (1.1 U.S.qts.)

[F2690E, F2690]

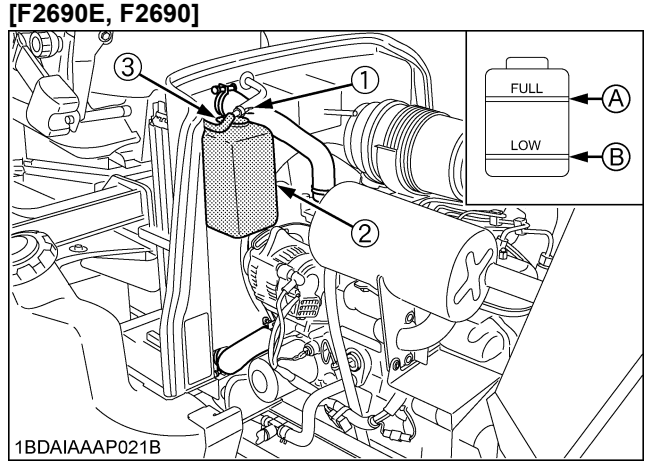

(1) Clamp
(2) Recovery tank
(3) Recovery tank cap
(A) "FULL"
(B) "LOW"

https://truckmanualshub.com/

[F3990]

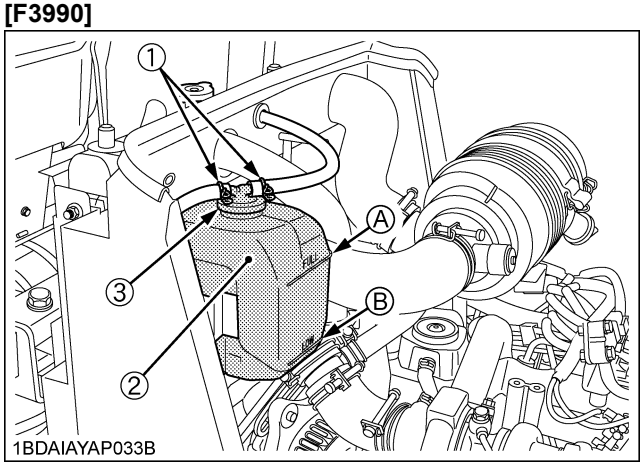

(1) Clamp
(2) Recovery tank
(3) Recovery tank cap
(A) "FULL"
(B) "LOW"

IMPORTANT :
- Do not start engine without coolant.
- Use clean, distilled water and anti-freeze to fill the radiator and recovery tank.
- When mixing the anti-freeze with water, the anti-freeze mixing ratio is 50%.
- Securely tighten radiator cap. If the cap is loose or improperly fitted, water may leak out and the engine could overheat.

■Anti-freeze

WARNING

To avoid serious injury:
- **When using anti-freeze, put on some protection such as rubber gloves. (Anti-freeze contains poison.)**
- **If it is swallowed, seek immediate medical help. Do NOT make a person throw up unless told to do so by poison control or a health care professional. Use standard first aid and CPR for signs of shock or cardiac arrest. Call your local Poison Control Center or your local emergency number for further assistance.**
- **When anti-freeze comes in contact with the skin or clothing, wash it off immediately.**
- **Do not mix different types of Anti-freeze. The mixture can produce chemical reaction causing harmful substances.**
- **Anti-freeze is extremely flammable and explosive under certain conditions. Keep fire and children away from anti-freeze.**
- **When draining fluids from the engine, place some container underneath the engine body.**
- **Do not pour waste onto the grounds, down a drain, or into any water source.**
- **Also, observe the relevant environmental protection regulations when disposing of anti-freeze.**

Always use a 50/50 mix of long-life coolant and clean soft water in KUBOTA engines.
Consult your local KUBOTA dealer concerning coolant for extreme conditions.

1. Long-life coolant (hereafter LLC) comes in several types. Use ethylene glycol (EG) type for this engine.
2. Before employing LLC-mixed cooling water, fill the radiator with fresh water and empty it again. Repeat this procedure 2 or 3 times to clean up the inside.
3. Mixing the LLC
   Premix 50% LLC with 50% clean soft water. When mixing, stir it up well, and then fill into the radiator.
4. The procedure for the mixing of water and anti-freeze differs according to the make of the anti-freeze and the ambient temperature. Refer to SAE J1034 standard, more specifically also to SAE J814c.

IMPORTANT :
- When mixing the anti-freeze with water, the anti-freeze mixing ratio is 50%.

Vol% Anti-freeze	Freezing Point	Boiling Point *
	℃ (℉)	℃ (℉)
50	-37 (-34)	108 (226)

https://truckmanualshub.com/

* At 1.013X10⁵Pa (760mmHg) pressure (atmospheric). A higher boiling point is obtained by using a radiator pressure cap which permits the development of pressure within the cooling system.

5. Adding the LLC
   (1) Add only water if the mixture reduces in amount by evaporation.
   (2) If there is a mixture leak, add the LLC of the same manufacturer and type in the mixing ratio 50%.
   *Never add any long-life coolant of different manufacturer. (Different brands may have different additive components, and the engine may fail to perform as specified.)
6. When the LLC is mixed, do not employ any radiator cleaning agent. The LLC contains anti-corrosive agent. If mixed with the cleaning agent, sludge may build up, adversely affecting the engine parts.
7. Kubota's genuine long-life coolant has a service life of 2 years. Be sure to change the coolant every 2000 hours or every 2 years whichever comes faster.

NOTE :
- The above data represent industry standards that necessitate a minimum glycol content in the concentrated anti-freeze.

EVERY 3000 HOURS

■Checking Turbo Charger

[F3990 only]

Consult your local KUBOTA Dealer for this service.

■Checking Injection Pump

Consult your local KUBOTA Dealer for this service.

EVERY 1 YEAR

■Checking Radiator Hose and Clamp

1. If hose clamps are loose or water leaks, tighten clamps securely.
2. Replace hoses and tighten hose clamps securely, if radiator hoses are swollen, hardened or cracked.

[F2690E, F2690]

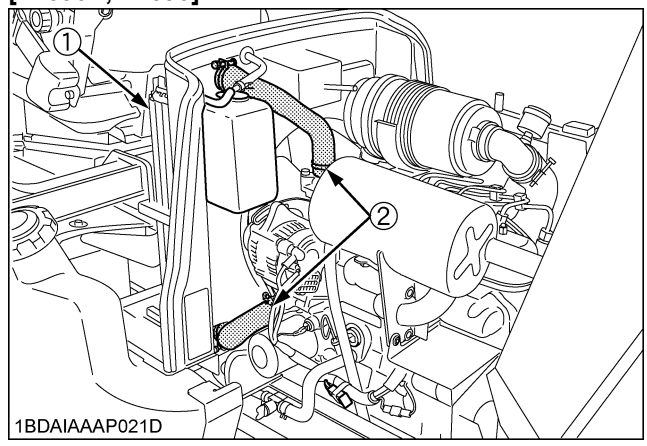

(1) Radiator core
(2) Radiator hose

[F3990]

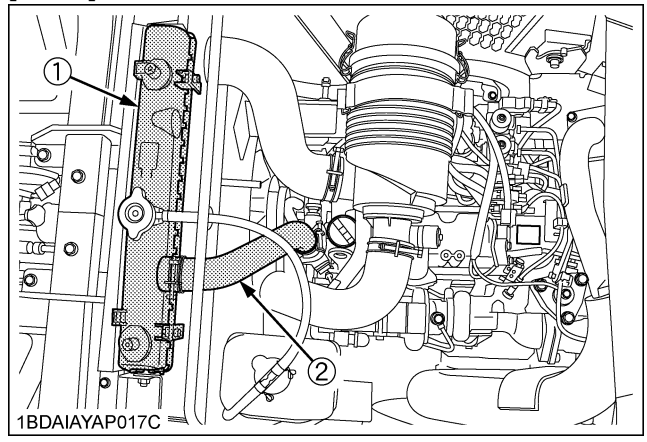

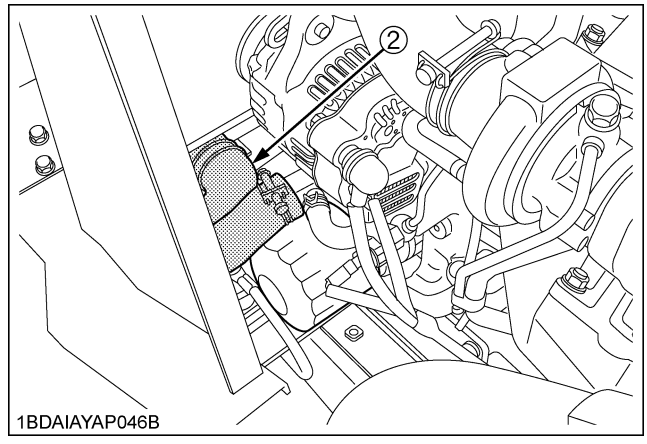

(1) Radiator core
(2) Radiator hose

https://truckmanualshub.com/

■Checking Hydraulic Hose

WARNING

To avoid serious injury:

- **Be sure to stop the engine and remove the key before checking and replacing hydraulic hose.**
- **Allow transmission case to cool down sufficiently; oil can be hot and may cause burns.**

1. Check to see that all lines and hose clamps are tight and not damaged.
2. If hoses and clamps are found worn or damaged, replace or repair them at once.

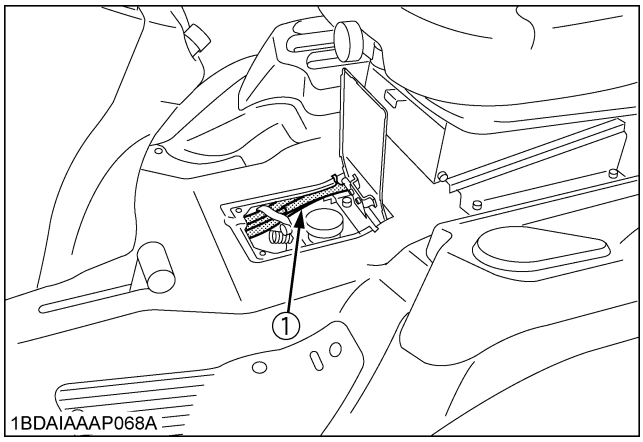

(1) Power steering hoses

[F2690E, F2690]

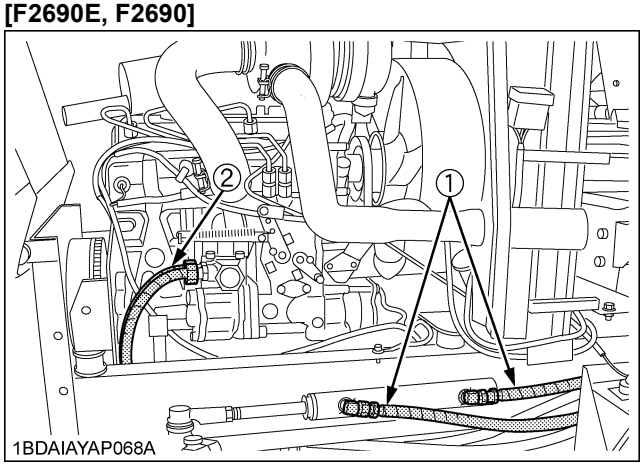

(1) Power steering hoses
(2) Pump hoses

[F3990]

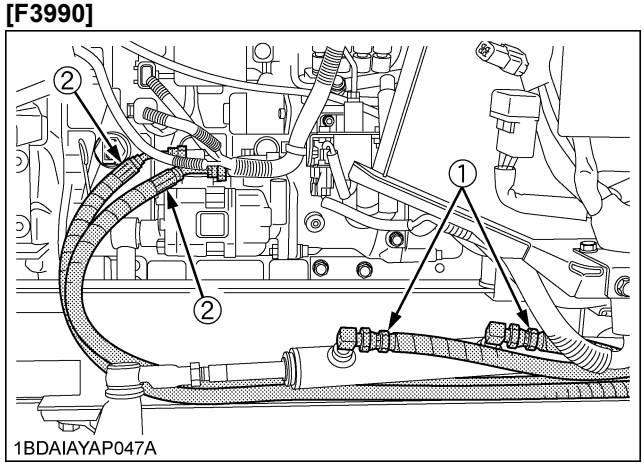

(1) Power steering hoses
(2) Pump hoses

■Checking Fuel Lines

(See "Checking Fuel Filter" in "EVERY 100 HOURS" in "PERIODIC SERVICE" section.)

https://truckmanualshub.com/

■Checking Intake Air Line

1. Check to see that hoses and hose clamps are tight and not damaged.
2. If hoses and clamps are found worn or damaged, replace or repair them at once.

[F2690E, F2690]

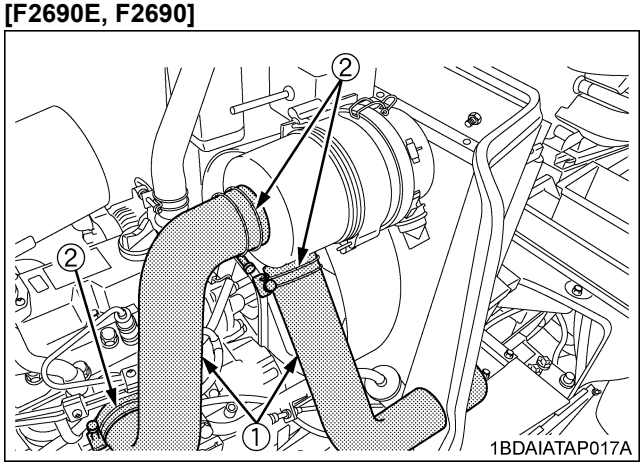

(1) Hose
(2) Clamp

[F3990]

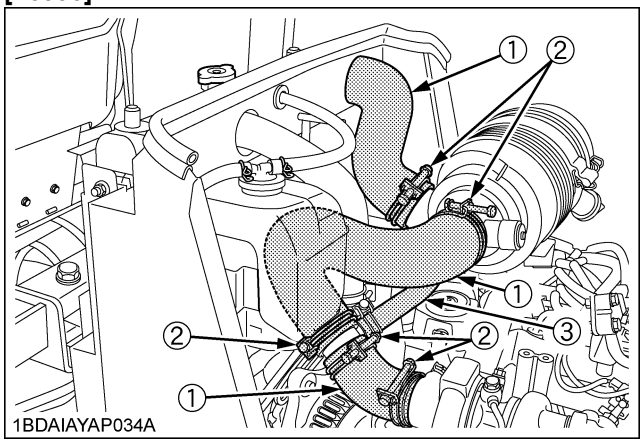

(1) Hose
(2) Clamp
(3) Hose (air blower)

■Checking Engine Breather Hose

Consult your local KUBOTA Dealer for this service.

EVERY 4 YEARS

■Replacing Hydraulic Hose

Replace hoses and hose clamps if you checked and found that hoses are swollen, hardened or cracked.

Consult your local KUBOTA Dealer for this service.

■Replacing Fuel Lines

Consult your local KUBOTA Dealer for this service.

■Replacing Engine Breather Hose

Consult your local KUBOTA Dealer for this service.

■Replacing Radiator Hose

Replace hoses and clamp bands if you checked and found that hoses are swollen, hardened or cracked.

Consult your local KUBOTA Dealer for this service.

■Replacing Intake Air Line

(See "Checking Intake Air Line" in "EVERY 1 YEAR" in "PERIODIC SERVICE" section.)

https://truckmanualshub.com/

SERVICE AS REQUIRED

■Replacing Fuses

The machine electrical system is protected from potential damage by fuses.
A blown fuse indicates that there is an overload or short somewhere in the electrical system.
If any of the fuses should blow, replace with a new one of the same capacity.

IMPORTANT :

- Before replacing a blown fuse, determine why the fuse blew and make any necessary repairs. Failure to follow this procedure may result in serious damage to the machine electrical system. Refer to the "TROUBLESHOOTING" section of this manual or your local KUBOTA Dealer for specific information dealing with electrical problems.
  If any of them should blow, replace with a new one of the same capacity.
  Do not use a fuse that is rated for a different capacity.

[F2690E, F2690]

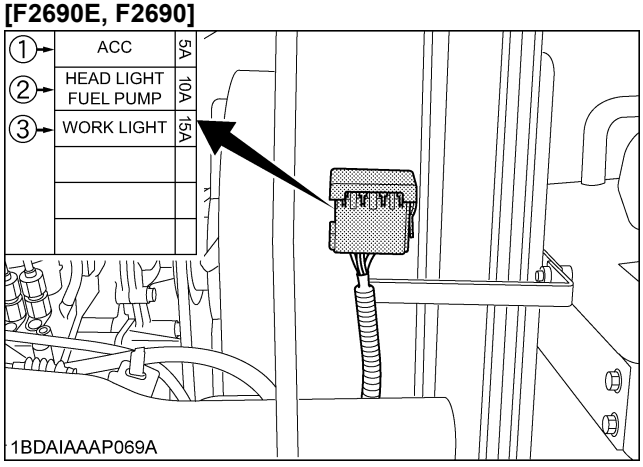

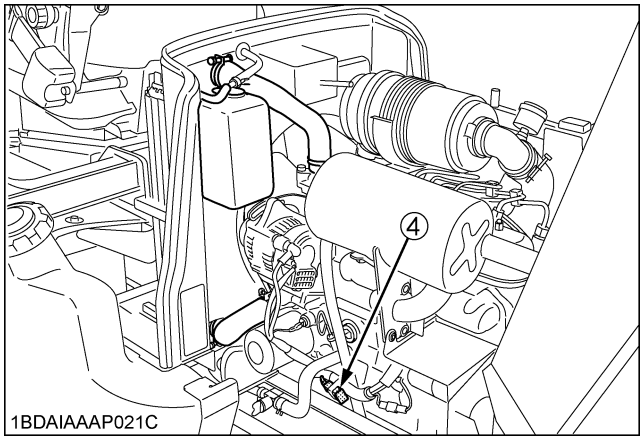

FUSE No.	CAPACITY (A)	Protected circuit
①	5	ACC
②	10	Head lights, Fuel pump
③	15	Work light
④	Slow blow fuse 50	Check circuit against wrong battery connection

[F3990]

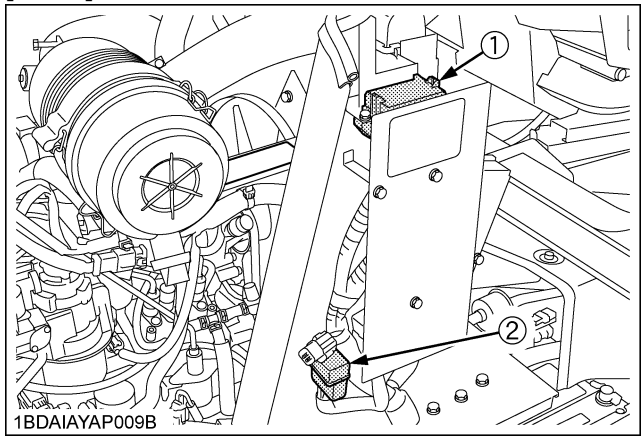

(1) Fuse box
(2) Slow blow fuse box

[F3990] Fuse box

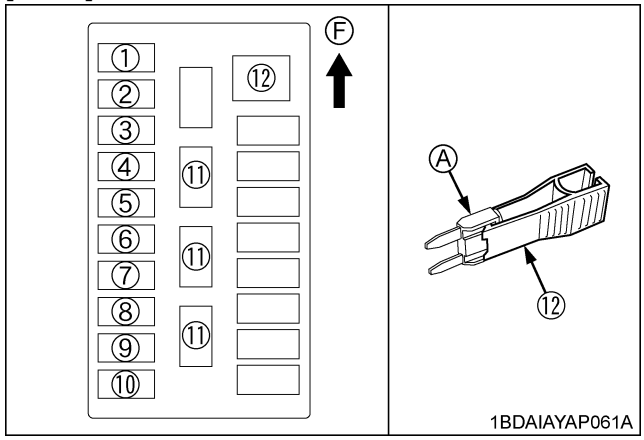

(A) Fuse
(F) Front

https://truckmanualshub.com/

[F3990] Slow blow fuse box

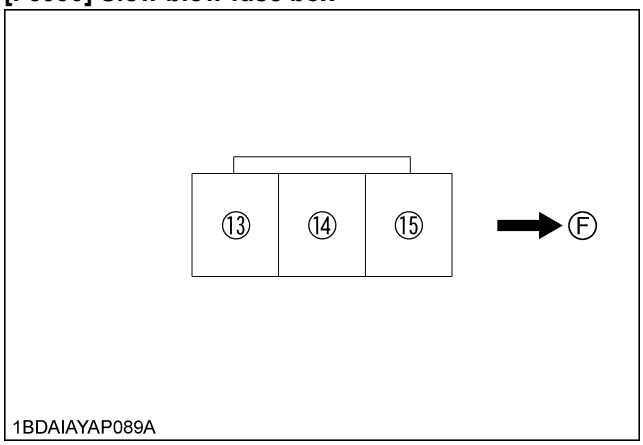

(F) Front

FUSE No.	CAPACITY (A)	Protected circuit
①	5	Relay (Glow)
		Meter (Glow)
②	5	Relay (Starter)
③	20	Relay (Auxiliary)
④	10	Relay (Reformulated glow)
⑤	5	Meter (Battery)
⑥	10	Relay (Horn)
		Lamp switch
⑦	5	Engine run (ACC)
⑧	10	Alternator
		Fuel pump
		Solenoid bulb
⑨	10	Rack position sensor
⑩	5	Control system
		Diag tool
⑪	5, 10, 20	Spare
⑫	-	Fuse puller
⑬	Slow blow fuse 40	Key switch
⑭	Slow blow fuse 40	Alternator
⑮	Slow blow fuse 60	Battery

■Replacing Light Bulb

1. Head light
   Take the bulb out of the light body and replace with a new one.
2. Other lights
   Detach the lens and replace the bulb.

Light	Capacity
Headlight	55 W

■Bleeding Fuel System

Air must be removed:
1. When the fuel filter or lines are removed.
2. When tank is completely empty.
3. After the machine has not been used for a long period of time.

◆ **Bleeding procedure is as follows:**
1. Fill the fuel tank with fuel.
2. Start the engine and run for about 30 seconds, and then stop the engine.
3. Open the bleed screw.
   When bubbles disappear from fuel coming out of the plug, tighten the bleed screw.

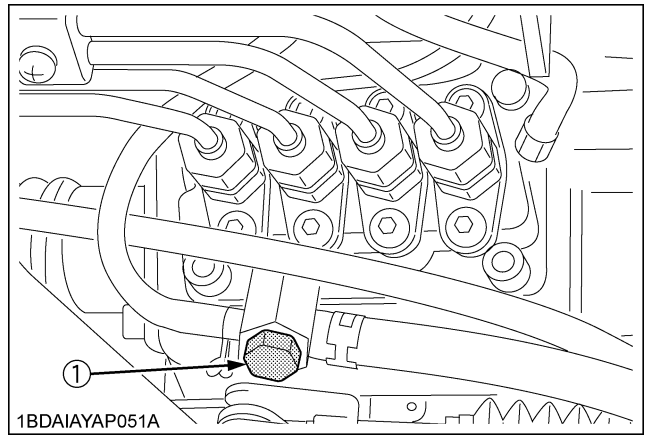

(1) Bleeding screw

https://truckmanualshub.com/

■Adjusting Lift Springs (LH & RH)

In order to help improve traction, adjust the lift springs according to the chart below.

	RCK72P-F39, RCK72R-F36, RCK60P-F39, RCK60R-F36
RH	L = 50 mm (2.0 in.)
LH	L = 70 mm (2.8 in.)

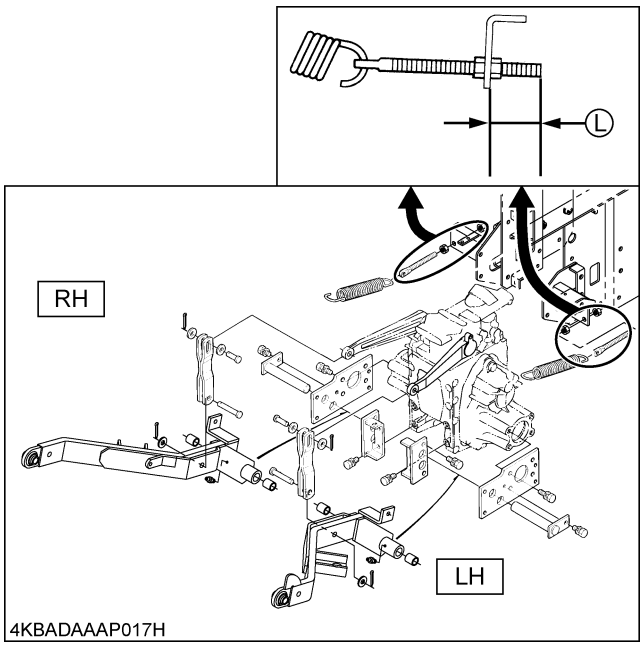

(L) RIGHT HAND: 50mm (2.0 in.)
LEFT HAND: 70mm (2.8 in.)

https://truckmanualshub.com/

STORAGE

WARNING

To avoid serious injury:

- **To reduce fire hazards, allow the engine and exhaust system to cool before storing the machine in an enclosed space or near combustible materials.**
- **To avoid the danger of exhaust fume poisoning, do not operate the engine in a closed building without proper ventilation.**
- **Do not clean the machine with engine running.**
- **To avoid fire hazards, do not leave grass and leaves in the mower and the grass catcher. (if equipped)**
- **When storing, remove the key from the key switch to avoid operation by unauthorized persons.**

When the machine will not be operated for over 2 months, clean the machine and perform the following operations before storage.

1. Repair parts as necessary.
2. Check bolts and nuts and tighten as necessary.
3. Apply grease or engine oil to parts most likely to rust.
4. Inflate the tires to a little above the standard pressure levels. (Approximately 110%)
5. Lower the mower to the ground.
6. Remove the battery from the machine, recharge it, adjust the electrolyte to the proper level, and store in a cool dry place.
   The battery discharges over time even while in storage. Recharge it once a month in hot seasons and once every 2 months in cold seasons.
7. Drain fuel tank, fuel lines.
8. Store the machine where it is dry and sheltered from rain. Cover the machine with a tarpaulin.
9. Moisture content in most grasses can damage the mower and grass catcher (if equipped) if these components are not properly cleaned after use.
   Make sure the mower and the grass catcher are clean and completely empty before storage.
10. Jack the machine up and place blocks under the front and rear axles so that all 4 tires are off the ground.
    Keep the tires out of direct sunlight and extreme heat.

IMPORTANT :

- When washing the machine, be sure to stop the engine. Allow sufficient time for the engine to cool before washing.
- Cover the machine after the muffler and the engine have cooled down.

REMOVING THE MOWER FROM STORAGE

1. Check the tire air pressure and inflate the tires if they are low.
2. Jack the machine up and remove the support blocks.
3. Install the battery. Before installing the battery, make sure it is fully charged.
4. Check the fan belt tension.
5. Check all fluid levels (engine oil, transmission / hydraulic oil, engine coolant and any attached implements).
6. Start the engine. Observe all gauges. If all gauges are functioning properly and reading normal, move the machine outside.
7. Once outside, park the machine and let the engine idle for at least 5 minutes.
8. Shut the engine off and walk around machine and make a visual inspection looking for evidence of oil water leaks.
9. With the engine fully warmed up, release the parking brake and test the brakes for proper adjustment as you move forward. Adjust the brakes as necessary.

https://truckmanualshub.com/

TROUBLESHOOTING

ENGINE TROUBLESHOOTING

If something is wrong with the engine, refer to the table below for the cause and its corrective measure.

Trouble		Cause	Countermeasure
Engine is difficult to start or won't start.		● No fuel flow	● Check the fuel tank and the fuel filter. Replace the filter if necessary.
		● Air or water is in the fuel system.	● Check to see if the fuel line coupler bolt and nut are tight. ● Bleed the fuel system. (See "Bleeding Fuel System" as required in "PERIODIC SERVICE" section.)
		● In winter, oil viscosity increases, and engine revolution is slow.	● Use oils of different viscosities, depending on ambient temperatures. ● Use the engine block heater. (Optional)
		● Battery becomes weak and the engine does not turn over quick enough.	● Clean battery cables & terminals. ● Charge the battery. ● In cold weather, always remove the battery from the engine, charge and store it indoors. Install it on the machine only when the machine is going to be used.
Insufficient engine power		● Insufficient or dirty fuel ● The air cleaner is clogged.	● Check the fuel system. ● Clean or replace the element.
Engine stops suddenly.		● Insufficient fuel	● Refuel. ● Bleed the fuel system if necessary.
Exhaust fumes are colored.	Black	● Fuel quality is poor. ● Too much oil ● The air cleaner is clogged.	● Change the fuel and fuel filter. ● Check the proper amount of oil. ● Clean or replace the element.
	Blue white	● The inside of exhaust muffler is damp from fuel. ● Injection nozzle trouble ● Fuel quality is poor.	● Heat the muffler by applying load to the engine. ● Check the injection nozzle. ● Change the fuel and fuel filter.
Engine overheats.		● Engine overloaded	● Shift to lower gear or reduce load.
		● Low coolant level	● Fill cooling system to the correct level; check the radiator and hoses for loose connections or leaks.
		● Loose or damaged fan belt	● Adjust or replace fan belt.
		● Dirty radiator screen or bonnet screen	● Remove all trash.
		● Coolant flow route corroded	● Flush cooling system.

If you have any questions, contact your local KUBOTA Dealer.

Trouble	Operator's action
Engine not overheated, but engine warning indicator ⓘ on.	Stop the engine and get it restarted. If the engine fails to restart or the indicator stays on, immediately contact your local KUBOTA dealer.
Engine warning indicator ⓘ is turned on repeatedly.	Immediately contact your local KUBOTA dealer.

If you have any questions, consult your local KUBOTA Dealer.

https://truckmanualshub.com/

POWER TRAIN TROUBLE SHOOTING

If something is wrong with the power train, the master system warning indicator starts blinking and the error code shown below is displayed on the liquid crystal display, indicating the location of the trouble. If an error code appears, immediately contact your local KUBOTA Dealer for repairs.

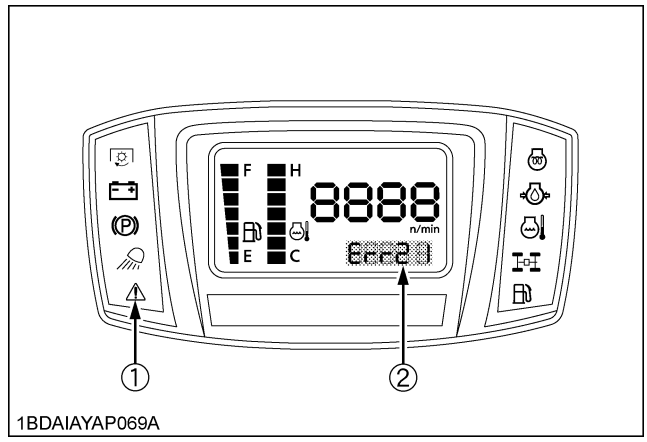

(1) Master system warning indicator
(2) Error code

[F2690E, F2690]

Displayed error code	Trouble	Operator's action
Err 1	Water temperature sensor trouble	Contact your local KUBOTA Dealer.
Err 2	Fuel sensor trouble	
Err 3	Meter panel memory reading trouble	

[F3990]

Displayed error code	Trouble	Operator's action
Err 2	Fuel sensor trouble	Contact your local KUBOTA Dealer.
Err 3	Meter panel memory reading trouble	
Err 21	CAN communication trouble	

https://truckmanualshub.com/

BATTERY TROUBLESHOOTING

Trouble	Cause	Remedy	Preventive measure
Starter does not function.	● Battery overused until lights are dim.	● Charge the battery sufficiently.	● Charge the battery properly.
	● Battery has not been recharged.		
	● Poor terminal connection	● Clean the terminal and tighten securely.	● Keep the terminal clean and tight. Apply grease and treat with anticorrosive.
	● Battery life expired.	● Replace the battery.	
From beginning starter does not function, and lights soon become dim.	● Insufficient charging	● Charge the battery sufficiently.	● Battery must be serviced properly before initial use.
When viewed from top, the top of plates looks whitish.	● Battery was used with an insufficient amount of electrolyte.	● Add distilled water and charge the battery.	● Regularly check the electrolyte level.
	● Battery was used too much without recharging.	● Charge the battery sufficiently.	● Charge the battery properly.
Recharging is impossible.	● Battery life expired.	● Replace the battery.	
Terminals are severely corroded and heat up.	● Poor terminal connection	● Clean the terminal and tighten securely.	● Keep the terminal clean and tight. Apply grease and treat with anticorrosive.
Battery electrolyte level drops rapidly.	● There is a crack or pin holes in the electrolytic cells.	● Replace the battery.	

If you have any questions, contact your local KUBOTA Dealer.

https://truckmanualshub.com/

MACHINE TROUBLESHOOTING

Trouble	Cause	Counter measure
Machine operation is not smooth.	● Hydrostatic transmission fluid is insufficient. ● Filter is clogged. ● Strainer is clogged.	● Replenish oil. ● Replace the filter. ● Clean the strainer.
Machine does not move while engine is running.	● Parking brake is on. ● Transmission fluid level is insufficient.	● Release the parking brake. ● Replenish oil.
Machine moves when speed control pedal is not depressed. (Engine is operated.)	● Hydrostatic lever linkage is not correctly adjusted.	● Ask your dealer for hydrostatic lever linkage adjustment or pressure adjustment.

If you have any questions, contact your local KUBOTA Dealer.

https://truckmanualshub.com/

INDEX

4WD Lock Lever....29
Adjustment of Foldable ROPS 25
Air Cleaner Element 59
Air Cleaner Primary Element and Secondary Element 67
Amount of Fuel and Refueling....48
Anti-freeze 69
Auto Regeneration Operating Procedure 12
Battery Condition....57
Block Heater (Option)....20
Brake Pedal....61
Cold Weather Starting 20
Constant RPM Management Control 35
Coolant Level 51
Coolant Temperature Gauge....34
Diesel Oxidation Catalyst and Diesel Particulate Filter (DPF) Muffler....10
Differential Lock Pedal 31
Directions for Use of Power Steering 36
DPF Muffler 52
DPF Regeneration Process....11
Easy Checker (TM) 32
Engine Break-in....23
Engine Breather Hose 72
Engine Oil....62
Engine Oil Filter Cartridge 63
Engine Oil Level 47
Engine Start System....53
Engine Stop Lever and Fuel Valve (Inside the Hood)....21
Engine Valve Clearance....67
Exhaust manifold....67
Fan Drive Belt Tension....62
Flush Cooling System and Coolant....68
Front Wheels (Drive Wheels) 37
Fuel Filter 60
Fuel Filter 67
Fuel Gauge....33
Fuel Injection Nozzle (Injection Pressure)....67
Fuel Lines....71
Fuel Lines....72
Fuel System 74
Fuses....73
Globe Box....26
Handling at low temperature 17
Handling Points 11
Head Light Switch 27
High-Low Gear Shift Lever 29
Hourmeter / Tachometer 34
How To Mount Another Implement.... 8
How To Tilt Up.... 8
Hydraulic Hose 71
Hydraulic Hose 72
Hydraulic Lift Lever.... 28
Immediately Stop the Engine if:.... 32
Inflation Pressure.... 37
Injection Pump.... 70
Intake Air Line.... 72
Key Switch.... 20
Lift Link Lowering Speed Control Knob 28
Lift Springs (LH & RH).... 75
Light Bulb.... 74
Lubricating All Grease Fittings.... 54
Lubricating Oil for New Machines.... 23
Machine Break-in.... 23
Movable Parts.... 52
Oiling 56
OPC System.... 54
Operator's Seat.... 26
Overheat Alarm 35
Parking 36
Parking Brake 30
PM Warning Level and Required Procedures 13
PM Warning Level and Required Procedures 15
PTO Lever 30
Radiator Hose.... 72
Radiator Hose and Clamp 70
Radiator Screen and Bonnet Screen to Prevent Overheating.... 49
Rear Axle Differential Case Fluid [4WD].... 66
Rear Axle Gear Case Fluid [4WD].... 66
Rear Axle Pivot.... 67
Rear Wheels (Steering Wheels).... 38
Regeneration Inhibit Mode Operating Procedure 14
Seat Belt 27
Seat Belt and ROPS.... 46
Service Code Display 35
Speed Control Pedal 31
Steering Wheel Tilt Lever 27
Stopping 31
Throttle Lever 30
Tips on DPF Regeneration 17
Tire Pressure 50

https://truckmanualshub.com/

ENGLISH

To Fold the ROPS 24
To Raise the ROPS to Upright Position 25
Transmission Fluid 64
Transmission Fluid Level.....51
Transmission Oil Filter Cartridge.....64
Transmission Strainer 65
Turbo Charger.....70
Warm-up and Transmission Oil in the Low Temperature Range 21
Wheel Bolt Torque.....57