Link-Belt
EXCAVATORS • FORESTRY
DEMOLITION • MATERIAL HANDLING

https://truckmanualshub.com/

145X3 SPECIFICATIONS

SAE Net Horsepower: 100 HP (75 kW)
Operating Weight: 33,200 lbs. (15 000 kg)
Digging Depth: 18 ft. 1 in. (5.51 m)

https://truckmanualshub.com/

Cab

The Link-Belt X3 cab is the strongest and roomiest LBX has ever offered. The X3 cab is ROPS and FOPS Level 1 certified and is designed to be strong and safe without sacrificing operator comfort. These improvements leave plenty of room to rest work boots on the two foot rests on either side of the travel pedals.

Roomy
- 8% larger than X2 series cab
- 6% more floor space

Strong
- ROPS and FOPS Level 1 certified

Comfortable
- Fully-adjustable KAB seat in the 145 X3 and 235 X3, forward/backward, up/down
- Seat slides independently of console
- Adjustable arm rest angles, lumbar support, suspension

Optimum Visibility
- Sunroof with sunshade rated FOPS level 1
- Additional mirrors
- Standard rearview camera
- Wiper blade stores off front glass

Ergonomic Joysticks
- Low-effort
- Pre-wired for auxiliary hydraulics
- Function buttons for wiper swipe, horn, radio mute and one-touch idle
- Large, easy-to-push triggers

Quiet
- Pressurized cab
- 8% stronger climate control system with 8 vents
- Auxiliary sound jack to enjoy music or podcasts

Organized
- Logically located switches and controls
- Accessible 12V outlet for cell phone charging
- Cup holder
- Handy phone storage areas
- Removable ashtray; empty space can be used as an additional cup holder

https://truckmanualshub.com/

High-Definition 7" LED Monitor

The Link-Belt X3's from LBX are equipped with an all new High-Definition LED monitor. The full-color 7-inch monitor is one of the largest in the industry and rivals the resolution and quality found in luxury automobiles.

The X3's user-friendly monitor panel includes an engine-idle shutdown option that safely shuts off the engine after 3 minutes of idling, conserving fuel. Another idle feature accessible from the monitor panel is the auto-idle feature that, when selected, takes the engine speed down to an idle level, conserving fuel while waiting for that next truck to show up.

145 X3 and 235 X3 Models

The 145 X3 and 235 X3 models use a "passive" regeneration process and the monitor clearly lets the operator know what is going on and if they need to do anything with the machine. The on-screen DPD gauge shows the level of particulate matter that the DPF is capturing and will clean it out every 8 hours by way of an Auto Regeneration. During the Auto Regeneration process, the operator does NOT have to do anything with the machine other than keep working. During a parked, or Manual Regeneration, the monitor will give the operator the appropriate instructions on what to do with the machine, making it as simple as possible.

In-Cab Control

- Select and set up attachments
- Track or monitor up to 13 service interval reminders
- Engine idle shutdown, which, when selected, safely shuts off the engine after 3 minutes of idling to conserve fuel
- Adjust hydraulic flow
- 18 languages available

Monitor

- Fuel consumption gauge
- Full color display of standard rear view camera AND optional side-view camera on the same screen
- Monitor engine coolant and hydraulic oil temperatures
- Displays fuel level, travel mode, work mode and attachment mode
- System/Machine warning messages
- Work tool settings

A standard rear-view camera displays a panoramic view of the worksite from the rear of the machine, an optional side-view camera is available.

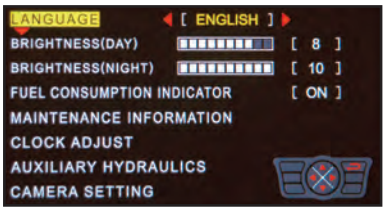

From the Computer Menu, you can change the monitor language, program service reminders and change auxiliary settings for flow to name a few.

https://truckmanualshub.com/

Engine

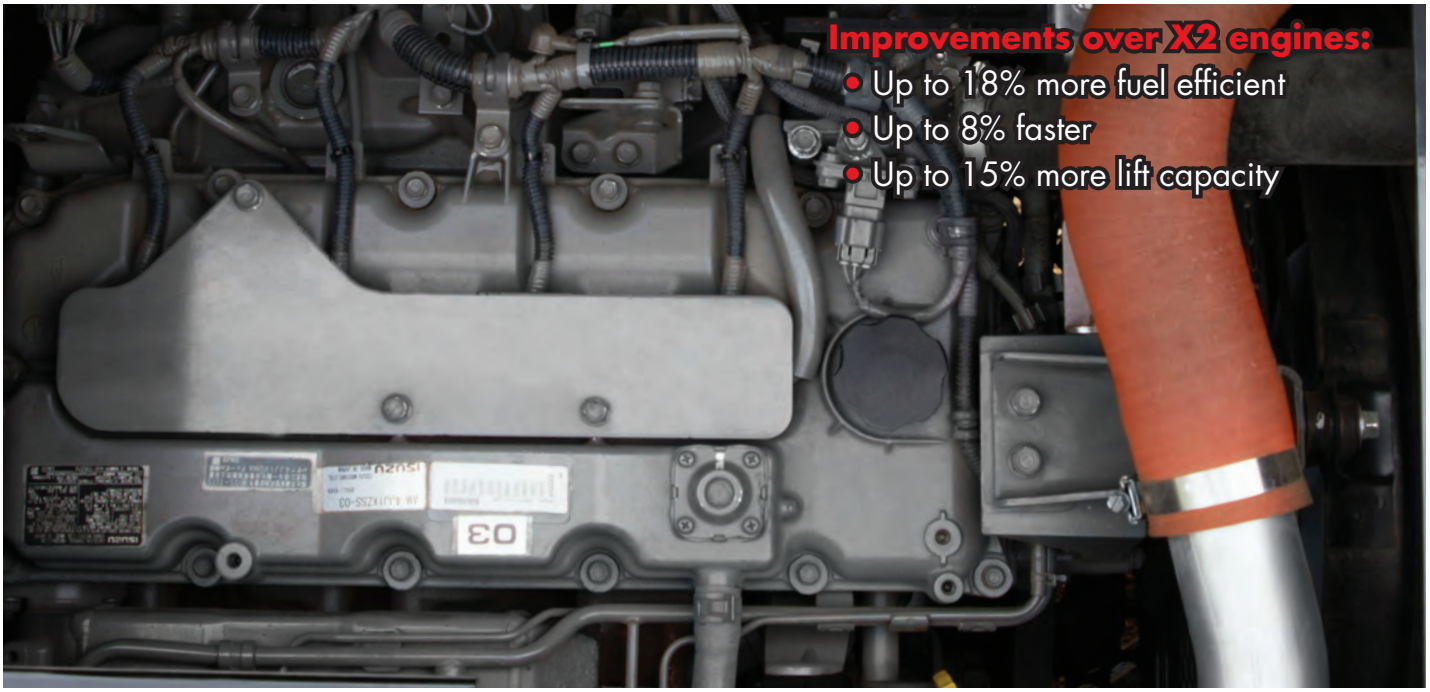

The fuel-efficient, powerful, productive, quiet and long-lasting Isuzu engine LBX uses in the Link-Belt X3 series meets the EPA's Interim Tier 4 (Tier 4a) requirements by way of cooled exhaust gas recirculation (EGR) technology and a diesel particulate diffuser system (DPD) in the 145 X3 and 235 X3. The DPD consists of a diesel oxidation catalyst (DOC) and a diesel particulate filter (DPF) for "passive regeneration" of exhaust emissions. The 75 X3 and 80 X3 are Final Tier 4-certified and are not equipped with a DPF; therefore, they do not require any regeneration.

A new variable geometry turbocharger (VGT), available on the 145 X3 and 235 X3, helps optimize the combustion process and ensures consistent boost pressure during low engine rpm's. This maintains efficient machine performance and helps eliminate harmful nitrous oxides (NOx) from forming.

The X3 has three engine work modes to give the operator full control of the machine for the job at hand:

- **Speed Priority (SP mode)** is the fastest and most productive mode giving the operator peak machine performance to get the job done quickly.
- **Heavy (H mode)** is a perfect combination of fuel efficiency and productivity. It really is the best of both worlds!
- **Applied Power (A mode)** gives the operator 13 different engine rpm settings to choose from to easily fine tune the machine to the specific job at hand. This mode is perfect for heavy lifting, fine grading or leveling work, and pipeline contractors use it to safely set pipe down into the trench.

Intelligent Design

- Quiet
- Long-lasting
- One-touch idle and auto idle functions conserve fuel
- Idle start protects a cold engine from over-revving
- Auto engine warm up feature gradually increases engine speed until normal operating temperature is achieved

https://truckmanualshub.com/

Hydraulics

The Link-Belt X3's from LBX are equipped with two Kawasaki variable-displacement axial-piston pumps and one Kawasaki gear pump installed in-line with the engine. This is the most efficient hydraulic pump layout – keeping engine rpm's low while producing plenty of hydraulic muscle.

The X3 uses an open center hydraulic system which refers to the open passage in the control valve that allows the hydraulic oil to return to tank when the control valve is centered. This design gives the machine a much smoother feeling when operating and also eliminates excess pressure throughout the system, which, in turn, helps to conserve fuel.

Powerful & Productive

- Available on the 145 X3 and 235 X3, Auto Power Boost gives 9% more hydraulic pressure (power) for 8 seconds
- More speed through larger hydraulic lines
- Improved oil regeneration circuits

Safe

- Boom and arm holding valves
- Standard hydraulic control pattern change valve to move between ISO and SAE
- Optional "Free Swing" auto-centers the machine over the load and takes out the pendulum effect of large, long loads

Long-lasting

- Continuous filtration of 5000-hour hydraulic oil through a 6 micron, full-flow return filter
- Less wear due to reduced back pressure

https://truckmanualshub.com/

Serviceability

Easy to maintain

- Ground level access to:
  - ✓ Batteries
  - ✓ Dual fuel filters with water separators
  - ✓ Engine oil filter
  - ✓ Dual element air filter
  - ✓ Cab fresh air filter
- Green drain plug and hose
- Easy-open engine hood
- Easy-access in-cab fuse box accessible while seated in cab seat
- Side-by-side oil cooler/radiator design is easy to clean
- Quick and easy access to grease all attachment pivot points
- Grease cylinder track adjusters make adjusting track tension a breeze

Maintenance reminders

- In-cab monitor will track 13 different serviceable items:
  - ✓ 5 reminders for engine items
  - ✓ 5 for hydraulic items
  - ✓ 3 other reminders

Simple

- Flexible and heat-resistant color-coded wiring harnesses
- External fuel site gauge can be viewed from ground-level to see fuel levels
- Lube and maintenance charts posted inside toolbox for readability and protection from the elements

Performance

Improvements and Optimizations

- 15% increased lift capacity over previous series
- 18% better fuel efficiency than previous series
- 8% faster cycle times
- Time will be saved in switching out the attachment tools via the in-cab monitor

https://truckmanualshub.com/

Innovation at Work

https://truckmanualshub.com/

Durability

LBX built the Link-Belt X3 series to last, and they come with one of the best standard warranties in the industry. We back our machines with a 1-year / 1,800 hour full machine warranty, a 2-year / 3,000 hour engine warranty, and a 3-year / 10,000 hour XtraStructure warranty that even covers the turntable bearing and tub.

LBX Warranty CERTIFIED PRODUCT SUPPORT

EMS (Extended Maintenance System) chrome pins and grease impregnated brass bushings with graphite inserts reduce wear-and-tear and can be found throughout the attachment. This design makes it possible to extend lube intervals to 6 months or 1,000 hours at all pivot points excluding the bucket which is monthly or 250 hours, whichever comes first.

Strong

- All booms and arms are ultrasound tested at the factory
- X-Pattern carbody made with high tensile strength steel
- Turntable bearing tub extends through the carbody and is welded on top and bottom
- Factory standard belly pan guard
- D-channel sideframes provide excellent impact resistance
- Cab is FOPS level 1 and ROPS certified
- Thicker steel plating on the attachment
- Standard HD linkage on 350 X3 and 470 X3 and on all Link-Belt X3 excavators ordered with factory hydraulic packages

Options

- Pre-existing mounting bosses make adding additional guarding easy
- Rubber bumper guarding
- Catwalks

X-Pattern carbody

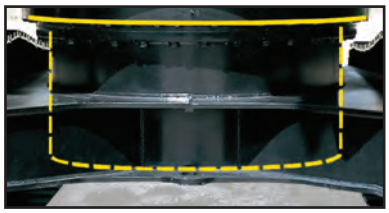

Turntable bearing tub

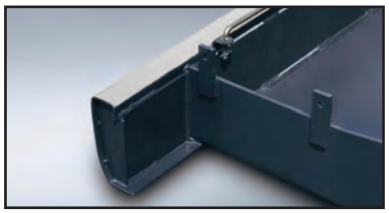

D-channel sideframes

https://truckmanualshub.com/

Specifications

Engine

Isuzu AM-4JJ1X Tier 4A turbocharged diesel engine with electronic control (ECM) and high pressure common-rail fuel injection, 4-cylinder, Water-cooled, Cooled Exhaust Gas Recirculation (CEGR), Intercooler, Variable-Geometry Turbocharger (VGT), Diesel Particulate Diffuser (DPD) with Diesel Oxidation Catalyst (DOC) and Diesel Particulate Filter (DPF) for "passive regeneration" of exhaust emissions, Electronic fuel pump and priming, Fuel cooler, Auto-idle start, Auto warm-up, EPF engine protection, Dual-stage fuel filtration, In-cab fuel filter restriction indicator, Remote oil filter, Green plug oil drain, Double element air filter.

SAE net horsepower...100 hp (75 kW) @ 2,000 rpm
Displacement.....183 cu in (3.0 L)
Maximum Torque...265 lbf-ft (359 Nm) @ 1600 rpm
Starter 24V-4.0kW
Alternator.....50 amp
Battery..... (2) 12-volt 72 amp hours

Cab and Controls

ROPS certified cab with climate control A/C and heat with defroster, Control panel with LED Hi-Definition color monitor, Rearview camera display, Fuel-efficiency gauge, DPF regeneration gauge, Low-effort joysticks pre-wired for auxiliary hydraulics, Control pattern changer, Safety glass windows, Sunroof with sunshade, Shockless cab suspension with four fluid mountings, KAB® reclining suspension seat, AM/FM sound system with MP3 auxiliary input jack, Digital clock, Dome light, Seat belt, Coat hook, Cup holder, Storage compartments, Floor mat, Footrests, Ashtray, 24-volt cigarette lighter, 12-volt outlet, Travel alarm, Handrails, Mirrors, Side-entry cab filter, Spare parts kit.

Four selectable working modes, Anti-theft password protection system, On-board self-diagnostic system with memory and service interval reminders, Auto-idling system, One-touch decelerator, Auto-idle engine shutdown, Auto-power boost, Neutral safety start, Gate-lock safety shutoff.

A/C Rating .....20,080 BTU/h
Heater Rating .....21,030 BTU/h
Sound Level - Cab Interior..... 70.0 dB(A)
Sound Level - Exterior..... 100.0 dB(A)

Swing

Planetary reduction powered by axial-piston motor, Internal ring gear with grease cavity for swing pinion, Swing bearing is single-row, shear type ball bearing, Mechanical disc swing brake, Auto-power swing.

Swing Speed.....10.6 rpm
Tail Swing .....5' 1" (1.55 m)
Swing Torque .....27,400 lbf-ft (37.0 kNm)

Hydraulic System

Open-center system, Two variable-displacement axial-piston pumps and one gear pump for pilot controls, Main control valve with one 4-spool section and one 5-spool section with auxiliary spool: stackable, Auxiliary Control System, Oil cooler, Auto-power boost, Boom and arm holding valves, 6 micron return filter, Firewall.

Hydraulic Pumps

Pump Output .....2 x 34.1 gpm (129 L/min)
Pilot Pump Maximum Flow ...5.3 gpm (20 L/min)

Relief Valve Settings

Boom/Arm/Bucket..... 4,970 psi (34.3 MPa)
in Power Boost ..... 5,260 psi (36.3 MPa)
Swing Circuit..... 4,060 psi (28.0 MPa)
Travel Circuit ..... 4,970 psi (34.3 MPa)

Hydraulic Cylinders

number of cylinders - bore x rod x stroke

Boom ..... 2 - 4.1"x 3.0" x 44.1"
(105 mm x 75 mm x 1,120 mm)

Arm..... 1 - 4.5" x 3.1" x 43.6"
(115 mm x 80 mm x 1,108 mm)

Bucket .....3.7" x 2.6" x 34.7"
(95 mm x 65 mm x 881 mm)

Blade ..... 2 - 4.5" x 2.8" x 9.8"
(115 mm x 70 mm x 250 mm)

Undercarriage

X Pattern carbody with LC long undercarriage or regular undercarriage with dozer blade, 6' 6" (1.99 m) track gauge, Sealed and strutted track chain with track guide, Sealed rollers and idlers, Two-speed independent hydrostatic travel with compact planetary final drive, Disc type brakes, Adjustable track tension, Carbody belly pan.

Carrier Rollers
LC no blade.....2 per Side
Regular undercarriage with blade ...1 per Side

Track Rollers
LC no blade.....7 per Side
Regular undercarriage with blade ...7 per Side

Track Link Pitch .....6.75" (172 mm)

Shoes
LC no blade..... 46 per Side
Regular undercarriage with blade....43 per Side

Shoe Width
LC no blade.....23.6" (600 mm)
Regular undercarriage w/ blade ...23.6" (600 mm)

Ground Pressure
LC no blade 800 mm shoe ...5.22 psi (0.36 Bar)
Reg. w/ blade 600 mm shoe ...5.8 psi (0.40 Bar)

Travel System

Two-speed independent hydrostatic travel with compact axial-piston motors, Hydraulic motor powered output shaft coupled to a planetary reduction drive and track sprocket, All hydraulic components mounted within the width of side frame, Automatic downshift for high torque to overcome obstacles, Spring-applied hydraulic release parking brake built into each motor, Travel motors equipped with counterbalance valve to prevent over-speeding down an incline, Single-pedal straight line travel.

Travel Speeds...2.1 - 3.5 mph (3.4 - 5.6 km/h)
Drawbar Pull .....26,078 lbf (116 kN)
Gradeability..... 70% (35°)

Attachment

Boom .....15' 2" (4.63 m)

Available Arms	Digging Force
• 8' 2" (2.50 m)	13,940 lbf (62 kN)
with Auto Power Boost	14,840 lbf (66 kN)
• 9' 11" (3.01 m)	12,590 lbf (56 kN)
with Auto Power Boost	13,490 lbf (60 kN)
• 6' 11" (2.11 m)	15,740 lbf (70 kN)
with Auto Power Boost	16,640 lbf (74 kN)

Bucket Digging Force.....20,230 lbf (90 kN)
with Auto Power Boost ...21,360 lbf (95 kN)

Lubricant and Coolant Capacity

Fuel Tank.....52.8 Gallons (200.0 Liters)
Hydraulic System...41.7 Gallons (158.0 Liters)
Hydraulic Tank.....19.8 Gallons (75.0 Liters)
Final Drive (per side) ...0.55 Gallons (2.1 Liters)
Swing Drive .....0.79 Gallons (3.0 Liters)
Engine Oil.....4.5 Gallons (17.0 Liters)
Coolant System.....4.0 Gallons (15.3 Liters)

Operating Weight

Working weight with LC, no blade, 23.6" (600 mm) shoes, 15' 2" (4.63 m) boom, 8' 2" (2.50 m) arm, 880 lb. (400 kg) bucket, 8,160 lbs (3 700 kg) counterweight
.....31,800 lbs. (14 400 kg)

Working weight with regular undercarriage, dozer blade, 23.6" (600 mm) shoes, 15' 2" (4.63 m) boom, 8' 2" (2.50 m) arm, 880 lb. (400 kg) bucket, 8,160 lbs (3 700 kg) counterweight
..... 33,200 lbs. (15 000 kg)

https://truckmanualshub.com/

Working Ranges

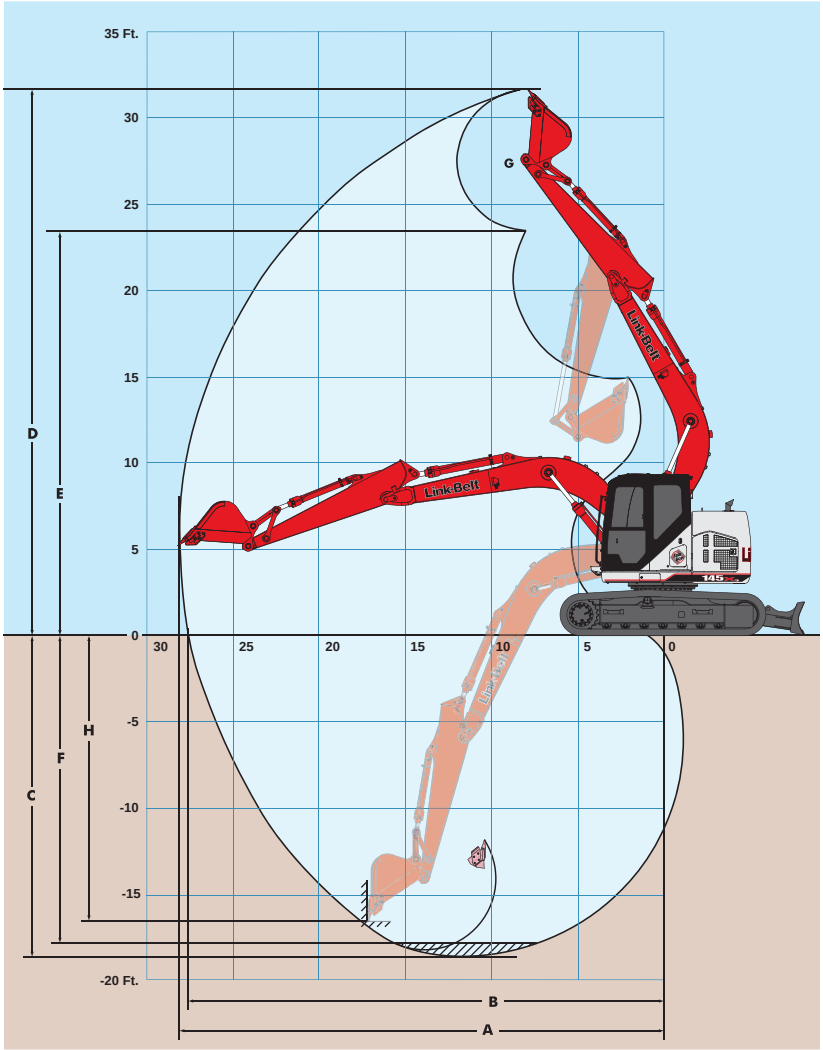

Machine Equipped with 15′ 2″ (4.63 m) Boom	Arm 8′ 2″ (2.50 m)	Arm 9′ 11″ (3.01 m)	Arm 6′ 11″ (2.11 m)
A. Maximum reach	27′ 2″ (8.29 m)	28′ 8″ (8.74 m)	26′ 1″ (7.94 m)
B. Maximum reach @ ground level	26′ 8″ (8.14 m)	28′ 3″ (8.60 m)	25′ 6″ (7.78 m)
C. Maximum dig depth	18′ 1″ (5.51 m)	19′ 9″ (6.01 m)	16′ 9″ (5.11 m)
D. Maximum dig height	30′ 8″ (9.34 m)	31′ 9″ (9.69 m)	29′ 9″ (9.06 m)
E. Maximum dump height	22′ 9″ (6.94 m)	23′ 11″ (7.29 m)	21′ 10″ (6.66 m)
F. Digging depth 8′ (2.44 m) level bottom	17′ 4″ (5.29 m)	19′ 2″ (5.83 m)	16′ 0″ (4.87 m)
G. Bucket rotation	178°	178°	178°
H. Maximum vertical wall depth	16′ 1″ (4.90 m)	17′ 4″ (5.28 m)	15′ 0″ (4.56 m)

Blade Dimensions

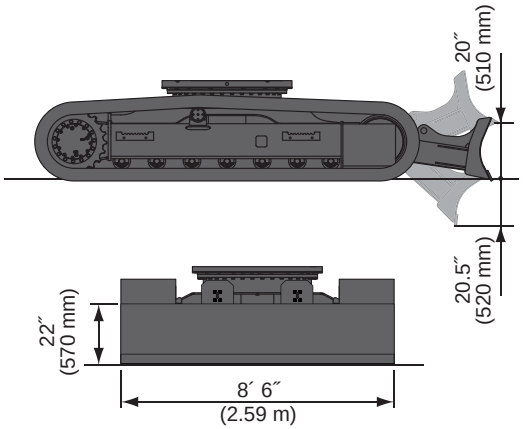

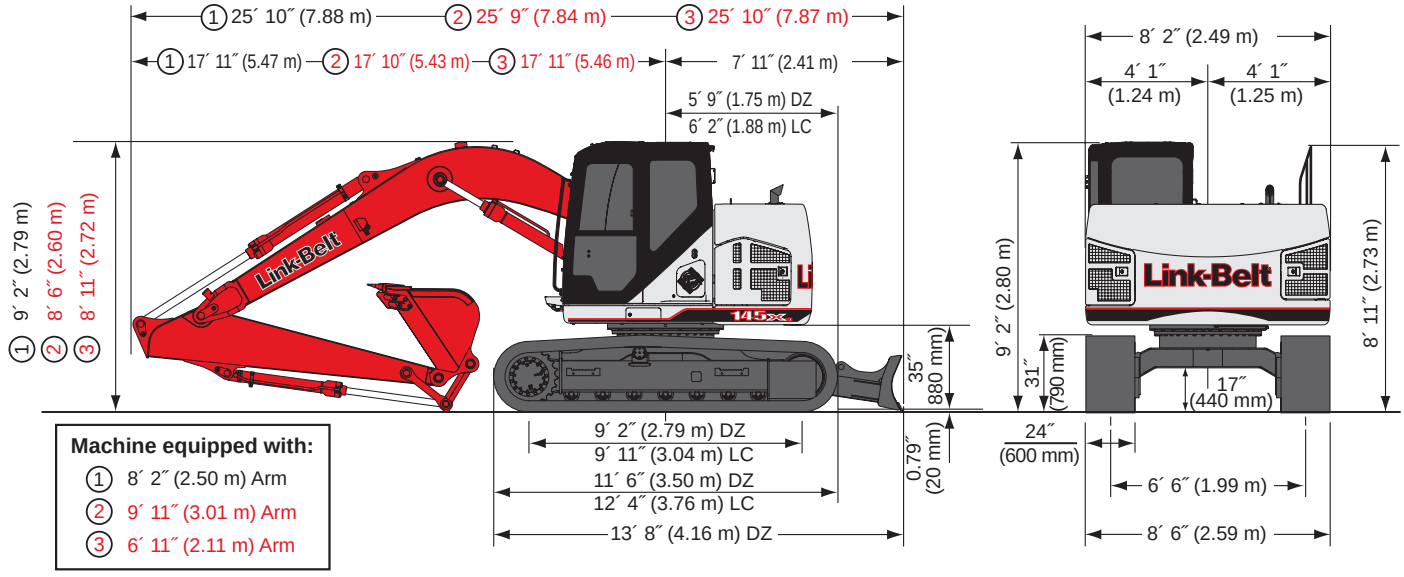

Machine equipped with:

1. 8′ 2″ (2.50 m) Arm
2. 9′ 11″ (3.01 m) Arm
3. 6′ 11″ (2.11 m) Arm

https://truckmanualshub.com/

Lifting Capacities - ISO Ratings

Radius of Load - Regular Undercarriage with Blade Down
8´ 2˝ (2.50 m) Arm with 15´ 2˝ (4.63 m) Boom and 900 lb. (400 kg) Bucket with Power-Boost Applied

		5´ 0˝ (1.5 m)		10´ 0˝ (3.0 m)		15´ 0˝ (4.5 m)		20´ 0˝ (6.0 m)		25´ 0˝ (7.5 m)		Cap at Max. Reach	
		End	Side	End	Side	End	Side	End	Side	End	Side	End	Side
+25´ 0˝	**lbs**					4,850*	4,850*					2,950*	2,950*
(7.5 m)	kg					2 380*	2 380*					1 310*	1 310*
+20´ 0˝	**lbs**					6,350*	6,350*	4,800*	4,800*			2,500*	2,500*
(6.0 m)	kg					2 980*	2 980*	2 340*	2 340*			1 120*	1 120*
+15´ 0˝	**lbs**					8,050*	8,050*	6,400*	5,350			2,350*	2,350*
(4.5 m)	kg					3 720*	3 720*	2 960*	2 500			1 060*	1 060*
+10´ 0˝	**lbs**			15,700*	15,700*	11,450*	8,250	8,350*	5,150	4,500*	3,500	2,350*	2,350*
(3.0 m)	kg			7 280*	7 280*	5 290*	3 840	3 880*	2 400	2 330*	1 620	1 060*	1 060*
+5´ 0˝	**lbs**			21,400*	14,600	13,750*	7,700	10,300*	4,900	5,500*	3,350	2,500*	2,500*
(1.5 m)	kg			9 840*	6 790	6 360*	3 580	4 760*	2 280	2 790*	1 570	1 120*	1 120*
Ground	**lbs**	6,250*	6,250*	19,250*	13,600	14,650*	7,250	10,600*	4,700	4,450*	3,300	2,800*	2,800*
Line	kg	2 790*	2 790*	8 350*	6 340	6 770*	3 380	4 900*	2 180	2 500*	1 530	1 260*	1 260*
-5´ 0˝	**lbs**	11,500*	11,500*	21,400*	13,500	14,200*	7,100	10,050*	4,600			3,350*	3,350*
(1.5 m)	kg	5 180*	5 180*	9 640*	6 290	6 560*	3 290	4 670*	2 130			1 520*	1 520*
-10´ 0˝	**lbs**	18,300*	18,300*	17,300*	13,700	11,800*	7,200	6,800*	4,700			4,650*	4,550
(3.0 m)	kg	8 130*	8 130*	8 020*	6 390	5 500*	3 340	3 540*	2 190			2 080*	2 040
-15´ 0˝	**lbs**			9,400*	9,400*	5,000*	5,000*					4,750*	4,750*
(4.5 m)	kg			4 550*	4 550*	2 690*	2 690*					2 230*	2 230*

Radius of Load - Regular Undercarriage with Blade Up
8´ 2˝ (2.50 m) Arm with 15´ 2˝ (4.63 m) Boom and 900 lb. (400 kg) Bucket with Power-Boost Applied

		5´ 0˝ (1.5 m)		10´ 0˝ (3.0 m)		15´ 0˝ (4.5 m)		20´ 0˝ (6.0 m)		25´ 0˝ (7.5 m)		Cap at Max. Reach	
		End	Side	End	Side	End	Side	End	Side	End	Side	End	Side
+25´ 0˝	**lbs**					4,850*	4,850*					2,950*	2,950*
(7.5 m)	kg					2 380*	2 380*					1 310*	1 310*
+20´ 0˝	**lbs**					6,350*	6,350*	4,800*	4,800*			2,500*	2,500*
(6.0 m)	kg					2 980*	2 980*	2 340*	2 340*			1 120*	1 120*
+15´ 0˝	**lbs**					8,050*	8,050*	6,400*	5,100			2,350*	2,350*
(4.5 m)	kg					3 720*	3 720*	2 960*	2 370			1 060*	1 060*
+10´ 0˝	**lbs**			15,700*	15,000	10,550	7,850	6,550	4,900	4,450	3,300	2,350*	2,350*
(3.0 m)	kg			7 280*	6 990	4 900	3 640	3 050	2 270	2 080	1 530	1 060*	1 060*
+5´ 0˝	**lbs**			20,200	13,700	10,000	7,300	6,300	4,650	4,350	3,200	2,500*	2,500*
(1.5 m)	kg			9 440	6 370	4 660	3 390	2 930	2 160	2 030	1 480	1 120*	1 120*
Ground	**lbs**	6,250*	6,250*	18,900	12,750	9,550	6,850	6,050	4,400	4,250	3,100	2,800*	2,800*
Line	kg	2 790*	2 790*	8 350*	5 930	4 430	3 180	2 820	2 060	1 980	1 440	1 260*	1 260*
-5´ 0˝	**lbs**	11,500*	11,500*	18,900	12,650	9,350	6,650	5,950	4,350			3,350*	3,350
(1.5 m)	kg	5 180*	5 180*	8 740	5 880	4 340	3 100	2 770	2 010			1 520*	1 520*
-10´ 0˝	**lbs**	18,300*	18,300*	17,300*	12,850	9,450	6,800	6,050	4,450			4,650*	4,300
(3.0 m)	kg	8 130*	8 130*	8 020*	5 980	4 380	3 150	2 820	2 070			2 080*	1 920
-15´ 0˝	**lbs**			9,400*	9,400*	5,000*	5,000*					4,750*	4,750*
(4.5 m)	kg			4 550*	4 550*	2 690*	2 690*					2 230*	2 230*

https://truckmanualshub.com/

Lifting Capacities - ISO Ratings

Radius of Load - Regular Undercarriage with Blade Down
9´ 11˝ (3.01 m) Arm with 15´ 2˝ (4.63 m) Boom and 750 lb. (340 kg) Bucket with Power-Boost Applied

		5´ 0˝ (1.5 m)		10´ 0˝ (3.0 m)		15´ 0˝ (4.5 m)		20´ 0˝ (6.0 m)		25´ 0˝ (7.5 m)		Cap at Max. Reach	
		End	Side	End	Side	End	Side	End	Side	End	Side	End	Side
+25´ 0˝	**lbs**					5,200*	5,200*					2,900*	2,900*
(7.5 m)	kg					2 360*	2 360*					1 290*	1 290*
+20´ 0˝	**lbs**					6,050*	6,050*	5,000*	5,000*			2,500*	2,500*
(6.0 m)	kg					2 770*	2 770*	2 310*	2 310*			1 130*	1 130*
+15´ 0˝	**lbs**					6,800*	6,800*	5,850*	5,500	4,050*	3,650	2,400*	2,400*
(4.5 m)	kg					3 100*	3 100*	2 750*	2 560	2 020*	1 710	1 080*	1 080*
+10´ 0˝	**lbs**			9,950*	9,950*	9,250*	8,350	7,550*	5,250	5,450*	3,550	2,400*	2,400*
(3.0 m)	kg			4 680*	4 680*	4 280*	3 880	3 530*	2 450	2 590*	1 660	1 090*	1 090*
+5´ 0˝	**lbs**			19,500*	15,000	13,100*	7,850	10,000*	4,950	6,450*	3,400	2,550*	2,550*
(1.5 m)	kg			8 990*	6 980	6 050*	3 640	4 610*	2 310	3 100*	1 590	1 150*	1 150*
Ground	**lbs**	6,300*	6,300*	22,150*	13,700	14,500*	7,300	10,550*	4,700	6,750*	3,300	2,800*	2,800*
Line	kg	2 820*	2 820*	9 530*	6 370	6 690*	3 400	4 870*	2 190	3 320*	1 530	1 270*	1 270*
-5´ 0˝	**lbs**	10,500*	10,500*	21,400*	13,300	14,400*	7,000	10,350*	4,550	4,350*	3,250	3,350*	3,200
(1.5 m)	kg	4 710*	4 710*	9 370*	6 200	6 650*	3 260	4 780*	2 120	2 490*	1 510	1 500*	1 440
-10´ 0˝	**lbs**	15,550*	15,550*	18,900*	13,450	12,700*	7,050	8,700*	4,600			4,400*	3,900
(3.0 m)	kg	6 900*	6 900*	8 760*	6 270	5 910*	3 280	4 100*	2 140			1 970*	1 750
-15´ 0˝	**lbs**	19,050*	19,050*	12,450*	12,450*	8,150*	7,200					5,200*	5,200*
(4.5 m)	kg	9 100*	9 100*	5 910*	5 910*	3 940*	3 350					2 400*	2 400*

Radius of Load - Regular Undercarriage with Blade Up
9´ 11˝ (3.01 m) Arm with 15´ 2˝ (4.63 m) Boom and 750 lb. (340 kg) Bucket with Power-Boost Applied

		5´ 0˝ (1.5 m)		10´ 0˝ (3.0 m)		15´ 0˝ (4.5 m)		20´ 0˝ (6.0 m)		25´ 0˝ (7.5 m)		Cap at Max. Reach	
		End	Side	End	Side	End	Side	End	Side	End	Side	End	Side
+25´ 0˝	**lbs**					5,200*	5,200*					2,900*	2,900*
(7.5 m)	kg					2 360*	2 360*					1 290*	1 290*
+20´ 0˝	**lbs**					6,050*	6,050*	5,000*	5,000*			2,500*	2,500*
(6.0 m)	kg					2 770*	2 770*	2 310*	2 310*			1 130*	1 130*
+15´ 0˝	**lbs**					6,800*	6,800*	5,850*	5,250	4,050*	3,450	2,400*	2,400*
(4.5 m)	kg					3 100*	3 100*	2 750*	2 440	2 020*	1 620	1 080*	1 080*
+10´ 0˝	**lbs**			9,950*	9,950*	9,250*	7,950	6,700	5,000	4,550	3,350	2,400*	2,400*
(3.0 m)	kg			4 680*	4 680*	4 280*	3 700	3 110	2 320	2 120	1 570	1 090*	1 090*
+5´ 0˝	**lbs**			19,500*	14,100	10,150	7,400	6,350	4,700	4,400	3,200	2,550*	2,550*
(1.5 m)	kg			8 990*	6 550	4 730	3 450	2 960	2 190	2 050	1 500	1 150*	1 150*
Ground	**lbs**	6,300*	6,300*	19,150	12,800	9,600	6,900	6,100	4,450	4,250	3,100	2,800*	2,700
Line	kg	2 820*	2 820*	8 920	5 960	4 460	3 200	2 830	2 070	1 990	1 440	1 270*	1 230
-5´ 0˝	**lbs**	10,500*	10,500*	18,600	12,450	9,250	6,600	5,950	4,300	4,250	3,050	3,350*	3,000
(1.5 m)	kg	4 710*	4 710*	8 660	5 800	4 310	3 070	2 760	2 000	1 960	1 420	1 500*	1 350
-10´ 0˝	**lbs**	15,550*	15,550*	18,600	12,600	9,300	6,650	6,000	4,350			4,400*	3,650
(3.0 m)	kg	6 900*	6 900*	8 690	5 860	4 320	3 090	2 780	2 020			1 970*	1 650
-15´ 0˝	**lbs**	19,050*	19,050*	12,450*	12,450*	8,150*	6,800					5,200*	5,200*
(4.5 m)	kg	9 100*	9 100*	5 910*	5 870	3 940*	3 170					2 400*	2 390

https://truckmanualshub.com/

Lifting Capacities - ISO Ratings

Radius of Load - Regular Undercarriage with Blade Down
6´ 11˝ (2.11 m) Arm with 15´ 2˝ (4.63 m) Boom and 900 lb. (410 kg) Bucket with Power-Boost Applied

		5´ 0˝ (1.5 m)		10´ 0˝ (3.0 m)		15´ 0˝ (4.5 m)		20´ 0˝ (6.0 m)		25´ 0˝ (7.5 m)		Cap at Max. Reach	
		End	Side	End	Side	End	Side	End	Side	End	Side	End	Side
+25´ 0˝	**lbs**											3,650*	3,650*
(7.5 m)	kg											1 620*	1 620*
+20´ 0˝	**lbs**					6,900*	6,900*	3,800*	3,800*			3,000*	3,000*
(6.0 m)	kg					3 220*	3 220*	2 190*	2 190*			1 350*	1 350*
+15´ 0˝	**lbs**			10,000*	10,000*	9,450*	8,500	7,150*	5,250			2,800*	2,800*
(4.5 m)	kg			4 610*	4 610*	4 400*	3 940	3 350*	2 440			1 270*	1 270*
+10´ 0˝	**lbs**			17,450*	15,800	12,050*	8,050	9,500*	5,050			2,800*	2,800*
(3.0 m)	kg			8 060*	7 330	5 570*	3 750	4 410*	2 340			1 270*	1 270*
+5´ 0˝	**lbs**			21,600*	14,150	14,100*	7,550	10,450*	4,800	3,400*	3,300	2,950*	2,950*
(1.5 m)	kg			10 010*	6 570	6 520*	3 500	4 810*	2 230	2 180*	1 540	1 330*	1 330*
Ground	**lbs**			17,600*	13,350	14,600*	7,150	10,500*	4,600			3,300*	3,300*
Line	kg			7 640*	6 210	6 730*	3 310	4 860*	2 140			1 490*	1 490*
-5´ 0˝	**lbs**	12,450*	12,450*	20,300*	13,450	13,750*	7,050	9,550*	4,550			4,000*	3,850
(1.5 m)	kg	5 610*	5 610*	9 370*	6 280	6 350*	3 270	4 460*	2 120			1 810*	1 750
-10´ 0˝	**lbs**	18,750*	18,750*	15,450*	13,650*	10,650*	7,200					5,700*	5,100
(3.0 m)	kg	8 340*	8 340*	7 180*	6 350	4 990*	3 350					2 520*	2 280

Radius of Load - Regular Undercarriage with Blade Up
6´ 11˝ (2.11 m) Arm with 15´ 2˝ (4.63 m) Boom and 900 lb. (410 kg) Bucket with Power-Boost Applied

		5´ 0˝ (1.5 m)		10´ 0˝ (3.0 m)		15´ 0˝ (4.5 m)		20´ 0˝ (6.0 m)		25´ 0˝ (7.5 m)		Cap at Max. Reach	
		End	Side	End	Side	End	Side	End	Side	End	Side	End	Side
+25´ 0˝	**lbs**											3,650*	3,650*
(7.5 m)	kg											1 620*	1 620*
+20´ 0˝	**lbs**					6,900*	6,900*	3,800*	3,800*			3,000*	3,000*
(6.0 m)	kg					3 220*	3 220*	2 190*	2 190*			1 350*	1 350*
+15´ 0˝	**lbs**			10,000*	10,000*	9,450*	8,100	6,650	4,950			2,800*	2,800*
(4.5 m)	kg			4 610*	4 610*	4 400*	3 760	3 100	2 310			1 270*	1 270*
+10´ 0˝	**lbs**			17,450*	14,850	10,400	7,650	6,450	4,750			2,800*	2,800*
(3.0 m)	kg			8 060*	6 900	4 840	3 550	2 990	2 220			1 270*	1 270*
+5´ 0˝	**lbs**			19,700	13,250	9,800	7,100	6,200	4,550	3,400*	3,100	2,950*	2,950*
(1.5 m)	kg			9 180	6 150	4 570	3 300	2 870	2 110	1 990	1 450	1 330*	1 330*
Ground	**lbs**			17,600*	12,500	9,400	6,700	6,000	4,350			3,300*	3,200
Line	kg			7 640*	5 810	4 370	3 120	2 780	2 020			1 490*	1 450
-5´ 0˝	**lbs**	12,450*	12,450*	18,800	12,600	9,250	6,600	5,950	4,300			4,000*	3,650
(1.5 m)	kg	5 610*	5 610*	8 710	5 870	4 310	3 080	2 760	2 000			1 810*	1 650
-10´ 0˝	**lbs**	18,750*	18,750*	15,450*	12,800	9,400	6,800					5,700*	4,800
(3.0 m)	kg	8 340*	8 340*	7 180*	5 960	4 370	3 160					2 520*	2 150

https://truckmanualshub.com/

Lifting Capacities - ISO Ratings

Radius of Load- Long Undercarriage
8´ 2˝ (2.50 m) Arm with 15´ 2˝ (4.63 m) Boom and 900 lb. (400 kg) Bucket with Power-Boost Applied

		5´ 0˝ (1.5 m)		10´ 0˝ (3.0 m)		15´ 0˝ (4.5 m)		20´ 0˝ (6.0 m)		25´ 0˝ (7.5 m)		Cap at Max. Reach	
		End	Side	End	Side	End	Side	End	Side	End	Side	End	Side
+25´ 0˝	**lbs**					4,850*	4,850*					2,950*	2,950*
(7.5 m)	kg					2 380*	2 380*					1 310*	1 310*
+20´ 0˝	**lbs**					6,350*	6,350*	4,800*	4,800*			2,500*	2,500*
(6.0 m)	kg					2 980*	2 980*	2 340*	2 310			1 120*	1 120*
+15´ 0˝	**lbs**					8,050*	7,800*	6,400*	4,900			2,350*	2,350*
(4.5 m)	kg					3 720*	3 630	2 960*	2 270			1 060*	1 060*
+10´ 0˝	**lbs**			15,700*	14,500	11,450*	7,500	7,450	4,650	4,500*	3,100	2,350*	2,350*
(3.0 m)	kg			7 280*	6 750	5 290*	3 490	3 470	2 170	2 330*	1 460	1 060*	1 060*
+5´ 0˝	**lbs**			21,400*	13,150	11,500	7,000	7,200	4,400	5,000	3,000	2,500*	2,500*
(1.5 m)	kg			9 840*	6 110	5 360	3 240	3 340	2 060	2 320	1 410	1 120*	1 120*
Ground	**lbs**	6,250*	6,250*	19,250*	12,200	11,000	6,550	6,950	4,200	4,450*	2,950	2,800*	2,800*
Line	kg	2 790*	2 790*	8 350*	5 670	5 130	3 040	3 230	1 960	2 280	1 360	1 260*	1 260*
-5´ 0˝	**lbs**	11,500*	11,500*	21,400*	12,100	10,800	6,350	6,850	4,100			3,350*	3,200
(1.5 m)	kg	5 180*	5 180*	9 640*	5 630	5 030	2 960	3 180	1 910			1 520*	1 440
-10´ 0˝	**lbs**	18,300*	18,300*	17,300*	12,300	10,850	6,500	6,800*	4,250			4,650*	4,050
(3.0 m)	kg	8 130*	8 130*	8 020*	5 730	5 050	3 010	3 220	1 970			2 080*	1 830
-15´ 0˝	**lbs**			9,400*	9,400*	5,000*	5,000*					4,750*	4,750*
(4.5 m)	kg			4 550*	4 550*	2 690*	2 690*					2 230*	2 230*

Radius of Load- Long Undercarriage
9´ 11˝ (3.01 m) Arm with 15´ 2˝ (4.63 m) Boom and 750 lb. (340 kg) Bucket with Power-Boost Applied

		5´ 0˝ (1.5 m)		10´ 0˝ (3.0 m)		15´ 0˝ (4.5 m)		20´ 0˝ (6.0 m)		25´ 0˝ (7.5 m)		Cap at Max. Reach	
		End	Side	End	Side	End	Side	End	Side	End	Side	End	Side
+25´ 0˝	**lbs**					5,200*	5,200*					2,900*	2,900*
(7.5 m)	kg					2 360*	2 360*					1 290*	1 290*
+20´ 0˝	**lbs**					6,050*	6,050*	5,000*	5,000*			2,500*	2,500*
(6.0 m)	kg					2 770*	2 770*	2 310*	2 310*			1 130*	1 130*
+15´ 0˝	**lbs**					6,800*	6,800*	5,850*	5,000	4,050*	3,300	2,400*	2,400*
(4.5 m)	kg					3 100*	3 100*	2 750*	2 340	2 020*	1 540	1 080*	1 080*
+10´ 0˝	**lbs**			9,950*	9,950*	9,250*	7,700	7,450	4,800	5,200*	3,200	2,400*	2,400*
(3.0 m)	kg			4 680*	4 680*	4 280*	3 570	3 470	2 230	2 420	1 490	1 090*	1 090*
+5´ 0˝	**lbs**			19,500*	13,550	11,700	7,100	7,250	4,500	5,050	3,050	2,550*	2,500
(1.5 m)	kg			8 990*	6 300	5 440	3 300	3 380	2 090	2 340	1 430	1 150*	1 130
Ground	**lbs**	6,300*	6,300*	22,150*	12,250	11,050	6,600	7,000	4,250	4,900	2,950	2,800*	2,550
Line	kg	2 820*	2 820*	9 530*	5 710	5 150	3 060	3 250	1 970	2 280	1 370	1 270*	1 160
-5´ 0˝	**lbs**	10,500*	10,500*	21,400*	11,900	10,750	6,300	6,800	4,100	4,350*	2,900	3,350*	2,850
(1.5 m)	kg	4 710*	4 710*	9 370*	5 550	5 000	2 930	3 170	1 900	2 260	1 350	1 500*	1 280
-10´ 0˝	**lbs**	15,550*	15,550*	18,900*	12,050	10,750	6,350	6,900	4,150			4,400*	3,500
(3.0 m)	kg	6 900*	6 900*	8 760*	5 610	5 010	2 950	3 190	1 920			1 970*	1 570
-15´ 0˝	**lbs**	19,050*	19,050*	12,450*	12,150	8,150*	6,550					5,200*	5,150
(4.5 m)	kg	9 100*	9 100*	5 910*	5 660	3 940*	3 040					2 400*	2 280

https://truckmanualshub.com/

Lifting Capacities - ISO Ratings

Radius of Load- Long Undercarriage

6´ 11˝ (2.11 m) Arm with 15´ 2˝ (4.63 m) Boom and 900 b. (410 kg) Bucket with Power-Boost Applied

		5´ 0˝ (1.5 m)		10´ 0˝ (3.0 m)		15´ 0˝ (4.5 m)		20´ 0˝ (6.0 m)		25´ 0˝ (7.5 m)		Cap at Max. Reach	
		End	Side	End	Side	End	Side	End	Side	End	Side	End	Side
+25´ 0˝ (7.5 m)	**lbs**											3,650*	3,650*
	kg											1 620*	1 620*
+20´ 0˝ (6.0 m)	**lbs**					6,900*	6,900*	3,800*	3,800*			3,000*	3,000*
	kg					3 220*	3 220*	2 190*	2 190*			1 350*	1 350*
+15´ 0˝ (4.5 m)	**lbs**			10,000*	10,000*	9,450*	7,800	7,150*	4,750			2,800*	2,800*
	kg			4 610*	4 610*	4 400*	3 620	3 350*	2 210			1 270*	1 270*
+10´ 0˝ (3.0 m)	**lbs**			17,450*	14,300	11,850*	7,350	7,350	4,550			2,800*	2,800*
	kg			8 060*	6 650	5 510	3 400	3 410	2 120			1 270*	1 270*
+5´ 0˝ (1.5 m)	**lbs**			21,600*	12,700	11,300	6,800	7,050	4,300	3,400*	2,950	2,950*	2,900
	kg			10 010*	5 900	5 270	3 160	3 290	2 010	2 180*	1 370	1 330*	1 320
Ground Line	**lbs**			17,600*	11,950	10,850	6,400	6,850	4,150			3,300*	3,000
	kg			7 640*	5 560	5 060	2 980	3 190	1 920			1 490*	1 370
-5´ 0˝ (1.5 m)	**lbs**	12,450*	12,450*	20,300*	12,050	10,750	6,300	6,800	4,100			4,000*	3,450
	kg	5 610*	5 610*	9 370*	5 620	5 000	2 930	3 170	1 900			1 810*	1 560
-10´ 0˝ (3.0 m)	**lbs**	18,750*	18,750*	15,450*	12,300	10,650*	6,500					5,700*	4,550
	kg	8 340*	8 340*	7 180*	5 730*	4 990*	3 020					2 520*	2 050

Bucket Sizes

Bucket Type	SAE Heaped Capacity (yd³)	SAE Heaped Capacity (m³)	Width Outside Lip (in)	Width Outside Lip (mm)	Bucket Weight (lbs)	Bucket Weight (kg)	Number of Teeth	Long Undercarriage Arm Length 8´ 2˝ 2.50 m	Long Undercarriage Arm Length 9´ 11˝ 3.01 m	Long Undercarriage Arm Length 6´ 11˝ 2.11 m	with Blade Arm Length 8´ 2˝ 2.50 m	with Blade Arm Length 9´ 11˝ 3 01 m	with Blade Arm Length 6´ 11˝ 2.11 m
STDP Standard duty plate	0 50	0.38	24	610	791	359	4	H	H	H	H	H	H
	0.66	0.50	30	762	889	403	4	H	M	H	H	M	H
	0 82	0.63	36	914	1007	457	5	M	L	M	M	L	M
	0 98	0.75	42	1067	1110	503	6	L	N/A	L	L	L	L
HDP Heavy duty plate	0 50	0.38	24	610	1064	483	4	H	H	H	H	H	H
	0.65	0.50	30	762	1183	537	4	H	M	H	H	M	H
	0 81	0.62	36	914	1331	604	5	L	L	M	M	L	M
	0 97	0.74	42	1067	1450	658	5	L	N/A	L	L	N/A	L
POWER	0.42	0.32	24	610	1225	556	4	H	H	H	H	H	H
	0 55	0.42	30	762	1314	596	4	H	M	H	H	H	H
	0.68	0.52	36	914	1431	649	5	M	L	M	M	L	H
DITCH	0 86	0.66	60	1524	970	440	0	L	L	M	M	L	M
	0.96	0.73	66	1676	1040	472	0	L	N/A	L	L	L	M

STDP - Standard duty plate
HDP - Heavy duty plate
XDP - Extreme duty plate
POWER - HDP for use with ESCO multi-pin grabber only

Approval Code For Arm/Bucket Combinations

H ..... Heavy material (up to 3,370 lbs./yd³)
M ..... Medium material (up to 2,700 lbs./yd³)
L ..... Light material (up to 2,020 lbs./yd³)
N/A..... Not applicable

Notes: Excavator lifting capacities

1. Lifting capacities shown should not be exceeded. Weight of all lifting accessories must be deducted from the above lifting capacities.
2. Lifting capacities are based on machine standing on firm, uniform supporting surface. User must make allowances for job conditions such as soft or uneven ground.
3. Lifting capacities shown do not exceed 75% of minimum tipping loads or 87% of hydraulic capacities. Capacities marked with an asterisk (*) are limited by hydraulic capacities.
4. Least stable position is over the side.
5. Operator should be fully acquainted with the Operator's Manual & Operating Safety Booklet, furnished by LBX before operating the machine.
6. Capacities apply only to the machine as originally manufactured and normally equipped by LBX Company, LLC.
7. Lift capacity ratings are based on ISO 10567, "Earthmoving Machinery - Hydraulic Excavators - Lift Capacity."

145X3

https://truckmanualshub.com/

Standard and Optional Equipment

CAB

- 12V Power Outlet ✓
- 24V Lighter ✓
- AM/FM Sound System ✓
- Anti-Theft Device ✓
- Ashtray ✓
- Auxiliary Switches on Control Lever ✓
- Cab Exterior Light Harness ✓
- Cab Filter - External ✓
- Cab Handrails ✓
- Cab Interior Light ✓
- Cab Lights ●
- Cab Iso-Mounts ✓
- Clear Roof Window ✓
- Climate Control A/C and Heater ✓
- Cup Holder ✓
- Defroster ✓
- Digital Clock ✓
- ECO Gauge ✓
- Emergency Exit and Hammer ✓
- Face Vent ✓
- Floor Mat ✓
- FOPS Head Guard (Level 2) ●
- Front Guard (mesh) ●
- Front Guard (OPG 1,2) ●
- Front Window One-Touch Lock ✓
- Gate Lock Hydraulic Activation ✓
- Horn ✓
- Hot & Cool Box ✓
- Hour Meter - Digital ✓
- KAB 815 Suspension Seat ✓
- KAB 855 Air-Suspension ●
- LED Color Monitor ✓
- Magazine Rack ✓
- Maintenance Interval Reminders ✓
- MP3 Auxiliary Input Jack ✓
- On-Board Diagnostic System ✓
- One-Piece Right Window ✓
- Radio Mute Switch ✓
- Rain Deflector ●
- Rear View Camera ✓
- Rear View Mirrors ✓
- Roof Sun Shade ✓
- ROPS Certified ✓
- Safety Glass Windows ✓
- Seat Recline ✓
- Selectable Monitor Languages ✓
- Side View Camera ●
- Small Storage ✓
- Sun Visor ●
- Travel Alarm with Cancel Switch ✓
- Trip Meter - Digital ✓
- Vandal Cover (front window) ●
- Wiper & Washer ✓
- Wiper Switch on RH Joystick ✓

ENGINE

- Air Filter - Double Element ✓
- Air Filter Restriction Indicator ✓
- Auto Warm-Up System ✓
- Auto-Idle ✓
- Auto-Idle Engine Shutdown ✓
- CEGR - Cooled Exhaust Gas Recirculation ✓
- Cooling Fan ✓
- Diesel Oxidation Catalyst (DOC) ✓
- Diesel Particulate Filter (DPF) ✓
- Drain for Fuel Tank ✓
- Dual Remote Fuel Filters with Water Separation ✓
- EGR Coolers ✓
- Emergency Engine Stop ✓
- Engine Idle System ✓
- Remote Engine Oil Drain ✓
- Engine Protection Feature ✓
- Fan Housing ✓
- Fuel Filter Restriction Indicator ✓
- Fuel Management System ✓
- Fuel Shut-Off Valve ✓
- Fuel Usage Monitor ✓
- Glow Plug Pre-Heat ✓
- Idle-Start ✓
- Intercooler ✓
- Neutral Start ✓
- One-Touch Idle ✓
- Passive Emissions-Regeneration ✓
- Radiator / Oil Cooler Protective Screen ✓
- Regeneration Gauge on Monitor ✓
- Remote Oil Filter ✓
- VGT Turbocharger ✓

HYDRAULICS

- Arm Regeneration ✓
- Arm Speed Assistance - 2 Pump Flow ✓
- Attachment Cushion Valve ✓
- Auto Swing Priority ✓
- Auxiliary Flow Control ✓
- Auxiliary Tool Settings - Memory ✓
- Auxiliary Valve ✓
- Boom Regeneration ✓
- Boom Speed Assistance - 2 Pump Flow ✓
- Bucket Curl Assist ✓
- Control Levers Pre-Wired for Auxiliary ✓
- Control Pattern Changer (2 way) ✓
- Fire Wall ✓
- Free Swing ●
- Holding Valve - Arm ✓
- Holding Valve - Boom ✓
- Hose Burst Check Valve ●
- Hydraulic Filter Restriction Indicator ✓
- Long Life Hydraulic Oil - 5,000 Hour ✓
- Neutral Pump De-stroke ✓
- Oil Cooler ✓
- Power Boost ✓
- Pressure Reading on Monitor ✓
- Pump Stand-By Pressure ✓
- Straight Travel Circuit ✓

AUXILIARY HYDRAULIC OPTIONS

- Single-Acting Auxiliary w/ Switch Activation ●
- Single-Acting Auxiliary w/ Pedal Activation ●
- Thumb Auxiliary w/ Switch Activation ●
- Multi-Function Auxiliary w/ Switch Activation ●
- Secondary Auxiliary w/ Switch Activation ●
- Combination Auxiliary w/ Switch Activation ●
- Combination Auxiliary w/ in-cab pressure setting control ●

UNDERCARRIAGE

- 500 mm rubber shoes (20.0 in) ●
- 600 mm shoes (23.6 in) 3-Bar Steel ●
- 700 mm shoes (27.5 in) 3-Bar Steel ●
- Steps ✓
- Carbody Belly Pan (swivel guard) ✓
- Center Track Guide (single) ✓
- Track Guides (double) ●
- Regular Undercarriage ●
- Long Undercarriage ●
- Sealed Link Chain ✓
- Strutted Track Chain ✓
- X-Pattern Carbody ✓

UPPERSTRUCTURE

- Belly Pans ✓
- Center Cover (Over Main CV) ✓
- Fuel Tank Belly Pan ✓
- Hand Rail - RH Access ✓
- Lifting Eyes for Counterweight ✓
- Lockable Fuel Cap and Service Doors ✓
- Rubber Bumper Guards ●
- Tool Box - Lockable ✓
- Turntable Tub ✓
- Work Lights - Boom and Tool Box ✓

ATTACHMENT

- 8′ 2″ (2.50 m) Arm ●
- 9′ 11″ (3.01 m) Arm ●
- 6′ 11″ (2.11 m) Arm ●
- 15′ 2″ (4.63 m) Main Boom Section ●
- Attachment Reinforcement Plate (boom+arm) ●
- Auxiliary Pipe Brackets ✓
- Boom Work Light ✓
- Bucket Anti-Clatter Device ✓
- Chrome pins ✓
- Easy Maintenance System ✓
- HD Bucket Link ●
- Quick Couplers ●
- Remote Lube Bank ✓
- Teardrop pin retention keepers ✓
- Thumbs ●

PARTS KIT

- Bucket Anti-Clatter Device ✓
- Engine Manual ✓
- Engine Oil Filter ✓
- Filter Wrench ✓
- Fuel Filters ✓
- Grease Gun ✓
- Green Plug Drain Hose for Engine Oil Drain ✓
- Hydraulic Return Filter ✓
- Ignition Keys ✓
- Pilot Circuit Hydraulic Filter ✓
- Rearview Mirrors ✓
- Work Light for Boom ✓

Equipment Key

Standard ✓ Optional ●

Litho in USA 9/13 #LBX2246 supersedes #LBX2231

LBX® and Link-Belt® are registered trademarks. Copyright 2013. All rights reserved. We are constantly improving our products and therefore reserve the right to change designs and specifications.

LBX "Different by Design"