https://truckmanualshub.com/

AHLMANN

COMPACT SYSTEM **AX 100**

> The loader specialist

> Articulated Loader 1.0 – 1.6 m³

https://truckmanualshub.com/

AHLMANN

AX 100

Let's have a look

49 kW / 67 hp at 2800 rpm

payload on forks: 2600 kg

manually switched 100% differential lock on front and rear axle

Optimum front and rear view due to ASAP-monoboom and compact rear end

A Ahlmann
S Single
A Arm
P Power

Monoboom with powerful protected Z-kinematics and parallel guidance

Transportation height < 4m

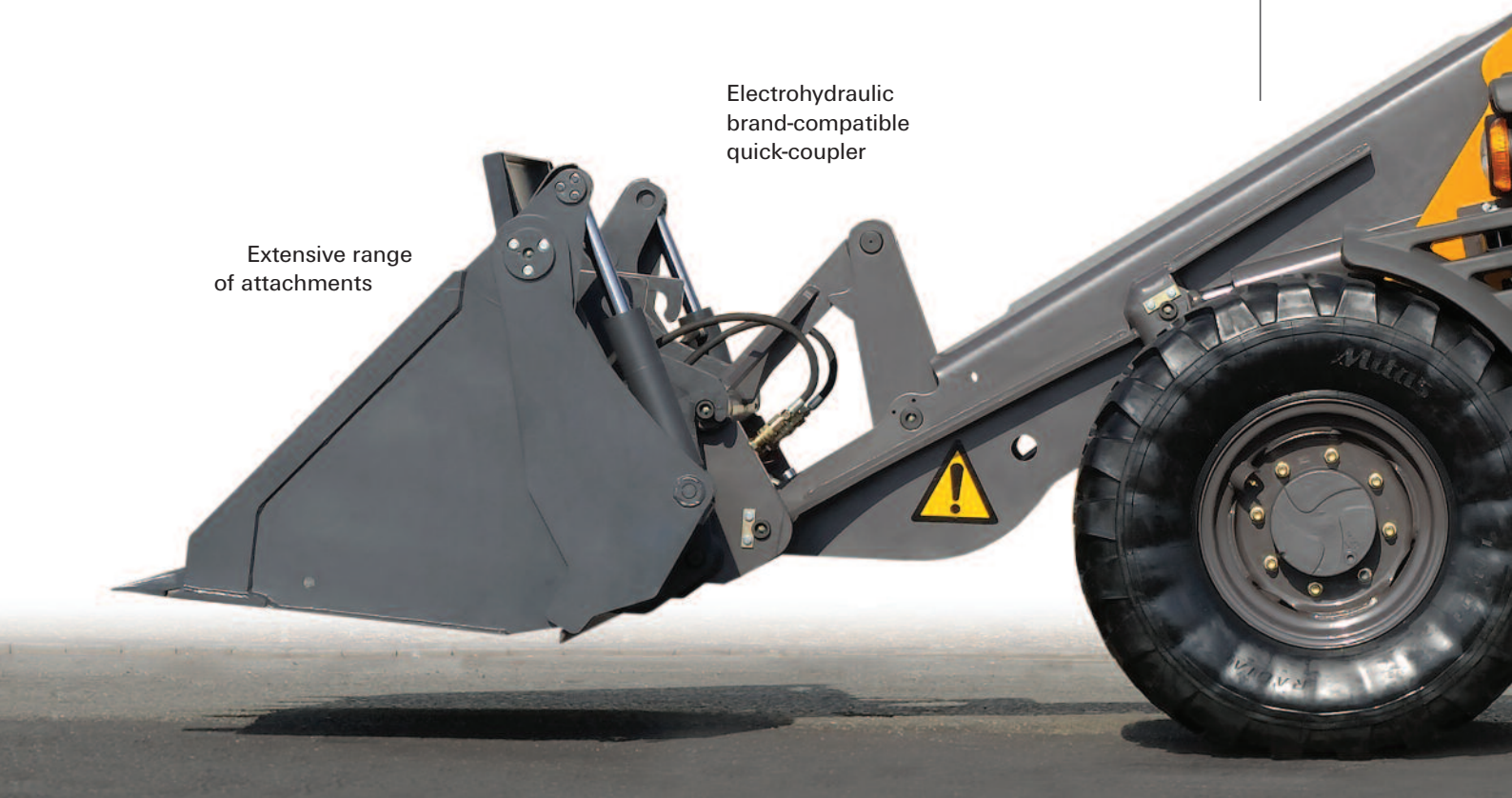

https://truckmanualshub.com/

AX 100

at your advantages

A Ahlmann
S Self
S Stabilising
C Concept

Maximum travelling comfort on any ground thanks to auto-stabilised oscillation

Easy access to all service points

Comfortable cab with excellent all-round visibility and easy access

Device height: 2455 mm

A Ahlmann
P Panorama
S Space
C Cab

Hydraulic on demand fan control

https://truckmanualshub.com/

AX 100

Powerful at work

Due to the ASAP-mono-boom, the Ahlmann AX features high breakout forces. Its Z-kinematics allow for perfect parallel guidance of attachments. This results in a high degree of safety, in particular when loading pallets. Fast tipping cycles and an excellent view on the attachments make daily work even more efficient.

The self-stabilizing articulated oscillating centre-pivot makes for maximum stability and comfortable driving even when working on uneven grounds.

https://truckmanualshub.com/

AHLMANN

AX 100

Comfortable and economic

The spacious cabin and the ergonomically laid out controls offer a convenient workplace for long-term work. Large tinted windows ensure an excellent all-round visibility.

The panorama roof allows for an exact overhead view, for example for truck loading.

A multi-position comfort swivel seat, glove-box with ample storage space and a powerful 3-stage ventilation and heating system make daily work a pleasure.

https://truckmanualshub.com/

AHLMANN

AX 100

Technical Data

Operating weight: 5475 kg
Engine power: 49 kW (67 hp)
Standard bucket: 1.0 m³

- ASAP-monoboom (Ahlmann Single Arm Power) with hydraulic quick-coupler
- Powerful Z-kinematics
- ASSC (Ahlmann Self Stabilising Concept)
- APSC (Ahlmann Panorama Space Cab) with removable cabin top
- Power-controlled high-performance hydrostatic drive
- Planetary axles with manually switched 100% differential lock on front and rear axle
- Smooth joystick operation
- Extensive range of attachments

Engine

Low-noise water-cooled 4-cylinder John Deere diesel engine (emissions according to EU-RL 97/68), 4-stroke, direct injection

Type	4024
Net power at	2800 rpm
acc. to SAE J 1995	(67 hp) 49 kW
Max. torque at	1680 rpm
acc. to ISO 9249	221 Nm
Spec. fuel consumption at max. torque	246 g/kWh
Cooling:	controlled hydraulic fan drive
Air intake filter:	2-level dry-air filter

Electrical system:

Operating voltage:	12 Volt
Battery capacity:	66 Ah
Alternator rating:	980 Watt 70 A
Starter rating:	(2.7 hp) 2.0 kW

Drive

Hydrostatic, controlled drive, 2 stages for maximum propulsive force, stages shiftable under load, multifunction lever (joystick) for drive and working hydraulics control

Axles:	large-scale production planetary axles	
Differential lock:	manually switched differential lock in both axles, locking value 100%	
Wheels:	tyre size:	365/70 R18
	alternatively:	405/70 R18
Speeds:	road gear:	0-20 km/h (optional 30 km/h)
	field gear:	0-7 km/h
Gradability:	under load	60%
Oscillation:	max. oscillation angle	+/- 11°
Ground clearance:	measured at differential	350 mm

Brakes

Working brakes:
1. hydrostatic inching brake, acting on all 4 wheels
2. hydraulically operated disk brake at the front axle, acting on all 4 wheels

Parking brake:
Mechanically activated parking brake, acting on all 4 wheels, with deactivation of the drive

Steering

Hydrostatic articulated steering

Max. steering angle	2 x 40°
Turning radius over rear	R = 3540 mm

Hydraulic system

Single circuit hydraulics with central gear pump (lift/lower, tilt, quick-coupler) and steering (via priority valve); three-way control valve with primary and secondary safeguards
Max. power at 2800 rpm 60 l/min and 250 bar
Floating position for lifting cylinders

Cylinders:	2 lifting cylinders	90 ø
	1 tilting cylinder	100 ø
Cycle times:	Lift (under load)	4.8 s
	Lower	2.9 s
	Crowd time	1.6 s
	Dump time	2.3 s

Performance data

Digging depth with standard bucket:		95 mm
Bucket position:	Crowd angle	45°
	Dump angle top max.	46°
	Dump angle max.	125°
Lifting force:		4450 daN
Breakout force:		4300 daN
Thrust force:		3800 daN

Tipping load:

standard bucket, straight	4100 kg
standard bucket, articulated	3690 kg

Payload/machine (even ground):

on forks, frontal	2600 kg
on forks, articulated	2300 kg
on forks, frontal*	2950 kg
on forks, articulated*	2700 kg

According to ISO 14397
* Transport position 300 mm above ground, compliant to ISO 14397 (ISO 8313) with safety margin

Chassis

Robot-welded front and rear chassis with self-stabilising articulated oscillating centre-pivot (ASSC) for max. stability in articulated position. ASAP-monoboom, with patented protected Z-kinematics on the inside. This allows exact parallel guidance of the pallet fork and excellent visibility on working attachments.
Operator's cabin with flexible four-point mountings for maximum driver comfort and minimum noise levels. Smooth, precise operation joystick control.

Filling capacities

Engine with filters approx.	8.5 l
Fuel tank approx.	70.0 l
Front axle total approx.	5.9 l
Rear axle total approx.	6.5 l
Hydraulic system incl. tank approx.	60.0 l

Standard features

Spacious APSC (Ahlmann Panorama Space Cab) cabin with removable cabin top. The driver door, which opens through 180°, and the large wide-opening side window can be locked within the machine contour. Tinted windows, electrical wipers front and rear, incl. front and rear screen washers, rear screen heating, 2 external rear-view mirrors, ergonomic joystick controls, multiply adjustable driver's seat, adjusts to driver's weight, safety belt, sunshade, heater and fresh air system with external air filter, interior lighting, 12V power outlet, storage space, central multifunction display, display elements and control lights with symbolic indicators, 2 driving lights on front, reversing lights, indicators, brake and tail lights, hydraulically operated quick coupler, electro-hydraulic locking system, towing hitch, fastening points, radio-ready cabin
Colour scheme: yellow/grey

Optional equipment

30 km/h version, 405/70 R18 tyres, exhaust outlet above hood, 360° warning light, bucket protector for compliance with road-safety requirements, reverse warning system, additional hydraulic system for frontal attachments, pipe break protection, boom suspension system, biodegradable oil fill for hydraulic system, main battery switch, radio, glove compartment, glove compartment with emergency seat, 2 working lights at the front and rear of the cabin roof, air conditioning, pressureless return line, immobilizer transponder, road-safety kit; various attachments possible such as multi-purpose bucket, pallet fork, load hook, etc.

Weight

Machine with quick-change mechanism and with standard bucket 1.0 m³ and teeth

	5475 kg
permissible axle load, front	3500 kg
permissible axle load, rear	3500 kg

https://truckmanualshub.com/

AX 100

Technical Data

Measurements

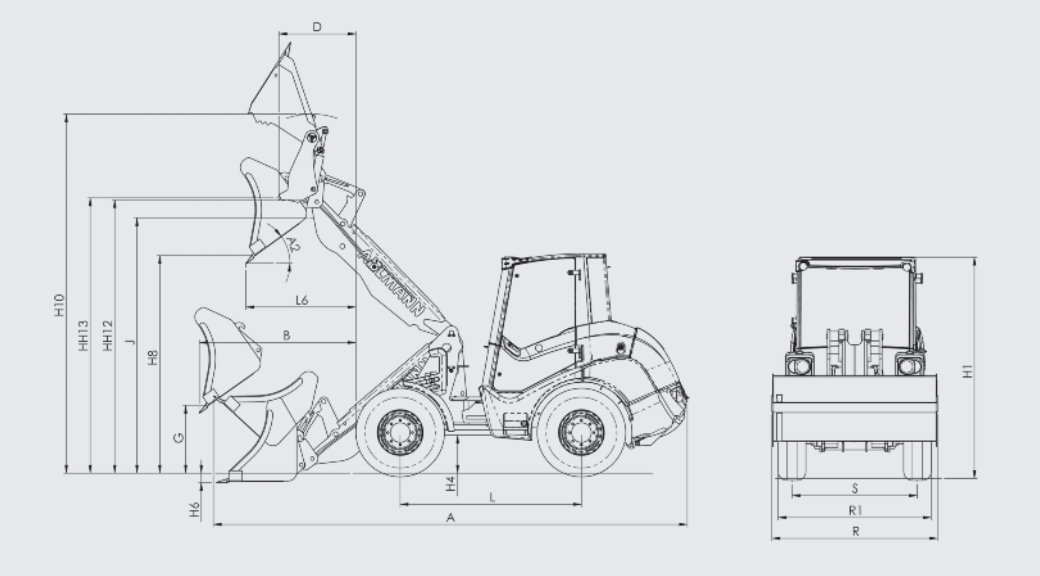

Buckets		
Standard	1.0 m³	4 x 1 0.95 m³
A	5345	5525
A2	46°	46°
B	1660	1795
D		925
G	615	475
H1	2455	2455
H4	425	425
H6	95	70
H8	2430	2295
H10	4135	4050
HH12	3050	3050
HH13		3040
J	2860	2860
L	2030	2030
L6	730	895
R	1850	1850
R1	1800	1800
S	1400	1400

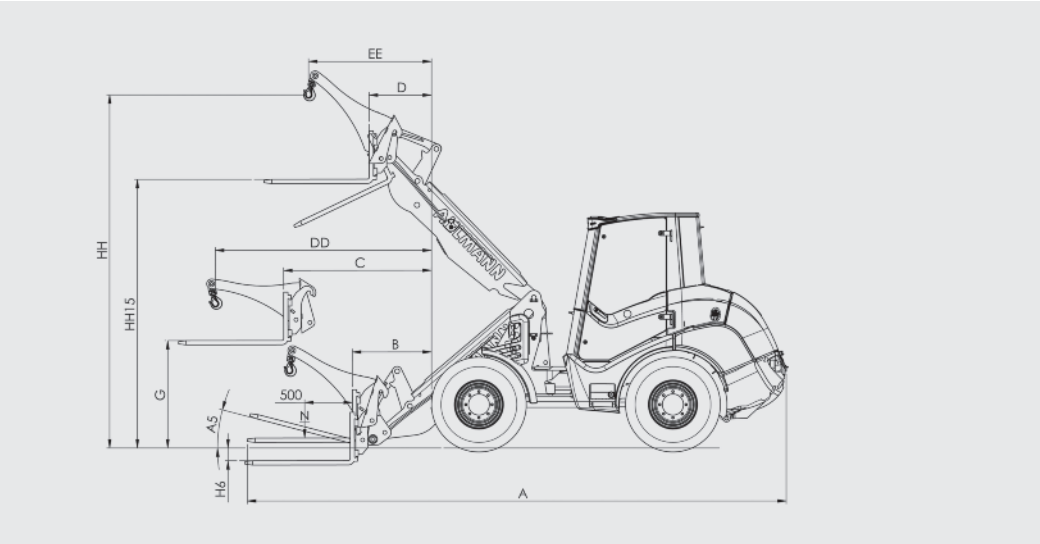

	Forks	Load hook
A	5720	5320
A5	19°	
B	915	
C	1330	
D	515	
DD		2165
EE		1340
G	1110	
H6	125	
HH		3685
HH15	2810	

Range of attachments

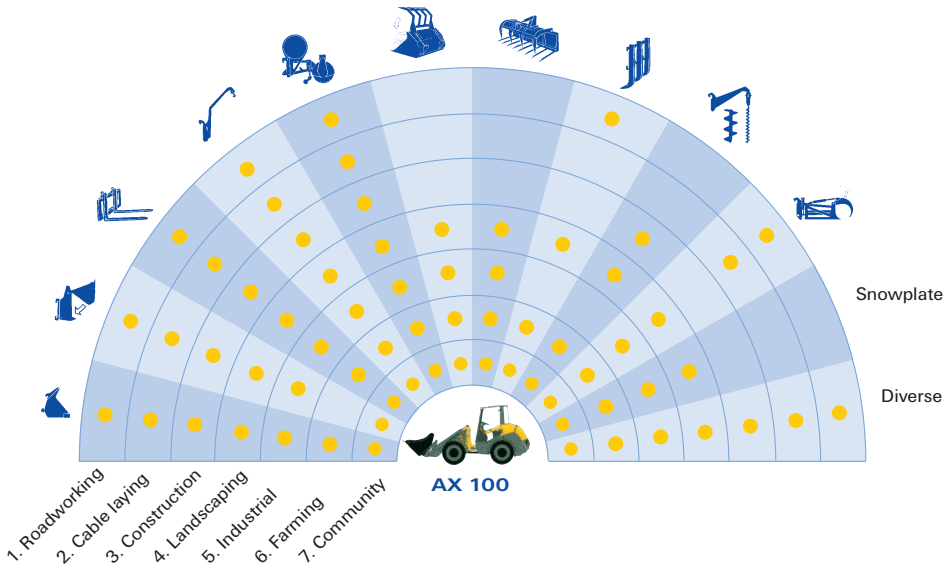

All data based on standard tyres.
Technical data are non-committal and are subject to constructional modifications!

https://truckmanualshub.com/

Our mission is to design, develop, manufacture and distribute quality products. Our innovative machines perform many varied and demanding tasks within your environment.

Customers are the heart of our company. We provide them with our knowledge, experience and the team spirit that drives Ahlmann.

Your Local Dealer

Order no. 231 09 207 · 11/2007

AHLMANN

Am Friedrichsbrunnen · D-24782 Büdelsdorf · phone +49 (0) 43 31/3 51-319 · fax +49 (0) 43 31/3 51-303 · info@ahlmann.com · **www.mecalac-ahlmann.com**

MECALAC and **AHLMANN** are companies from Mecalac Group