https://truckmanualshub.com/

Husqvarna®

289580

(LGTH2454)

Illustrated Parts List

532 43 49-25 Rev. 2

Downloaded from www.Manualslib.com manuals search engine

https://truckmanualshub.com/

SERVICE NOTES

Downloaded from www.Manualslib.com manuals search engine

https://truckmanualshub.com/

TRACTOR - MODEL NO. (289580), PRODUCT NO. LGTH2454

DECALS

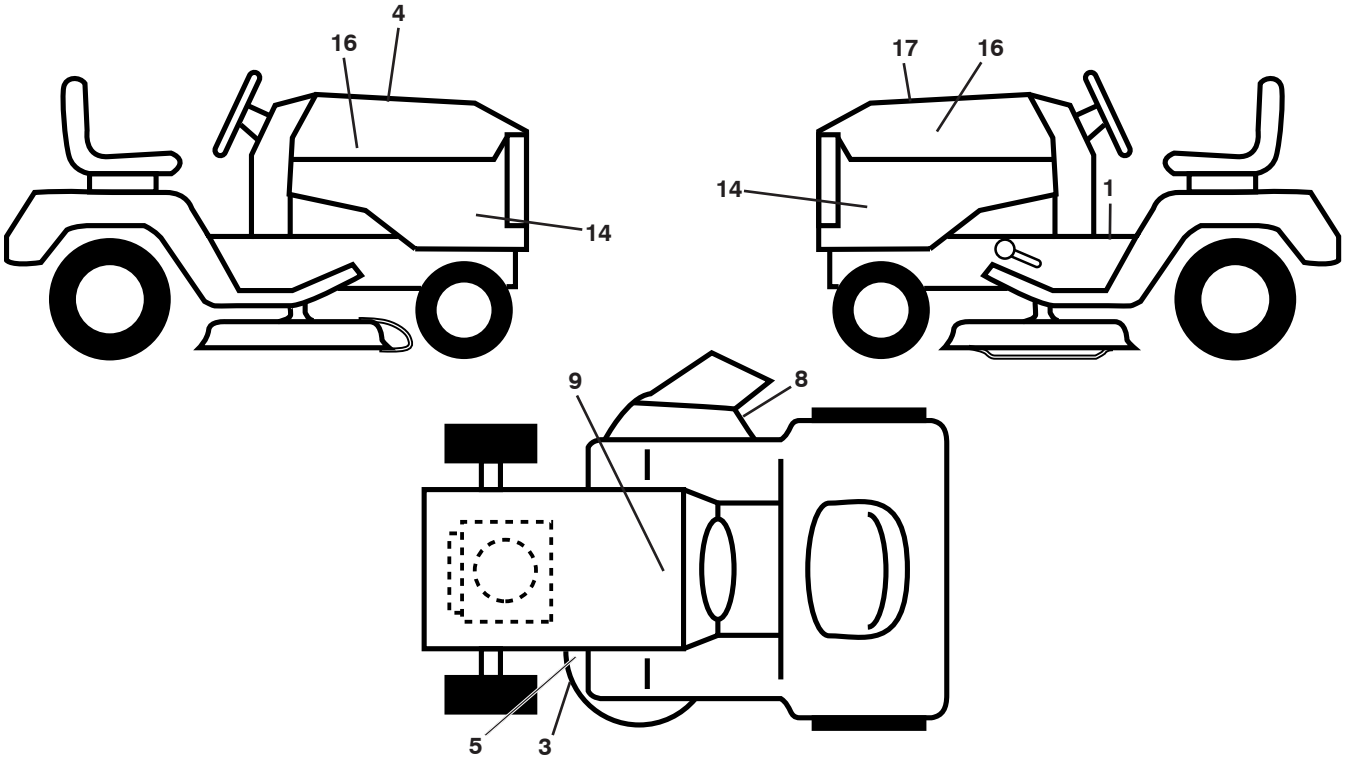

KEY NO.	PART NO.	DESCRIPTION
1	532 41 16-58	Decal, Fender Warning
3	532 17 05-63	Decal, Warning
4	532 42 38-29	Decal, Hood Cust Resp
5	532 17 84-55	Decal, Mower Caution Tension
8	532 19 87-85	Decal, Mower Sch.
9	532 14 50-05	Decal, Battery Dnge/Poi
14	532 43 49-44	Decal, Panel Side
16	532 42 91-96	Decal, Hood Logo
17	532 42 49-29	Decal, Replacement
- -	532 16 69-60	Decal, Bypass
- -	532 40 17-71	Pad, Footrest, LH
- -	532 40 17-70	Pad, Footrest, RH
- -	532 43 49-25	Manual, Owner's (English)
- -	532 43 49-26	Manual, Owner's (French)

WHEELS AND TIRES

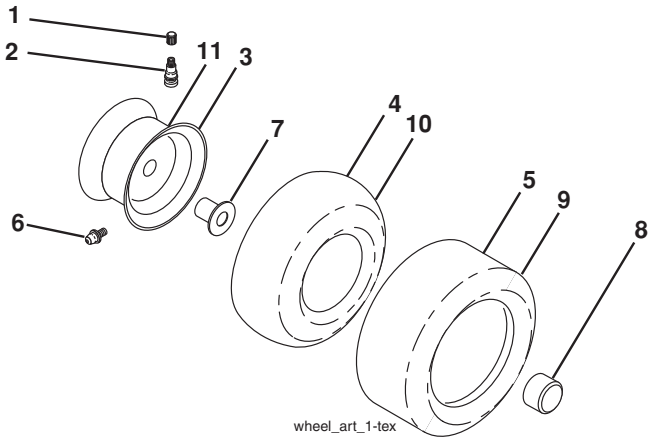

KEY NO.	PART NO.	DESCRIPTION
1	532 05 91-92	Cap, Valve, Tire
2	532 06 51-39	Stem, Valve
3	532 14 45-09	Rim Assembly, Front
4	532 00 81-34	Tube, Front (Service Item Only)
5	532 10 62-30	Tire, Front
6	532 12 49-57	Fitting, Grease (Front Wheel Only)
7	532 12 49-59	Bearing, Flange (Front Wheel Only)
8	532 17 50-39	Cap, Axle
9	532 18 47-08	Tire, Rear
10	532 00 71-54	Tube, Rear (Service Item Only)
11	532 40 17-82	Rim Assembly, Rear
- -	532 14 43-34	Sealant, Tire (10 oz. Tube)

NOTE: All component dimensions given in U.S. inches
1 inch = 25.4 mm

Downloaded from www.Manualslib.com manuals search engine

https://truckmanualshub.com/

TRACTOR - MODEL NO. (289580), PRODUCT NO. LGTH2454

SCHEMATIC

SCH12

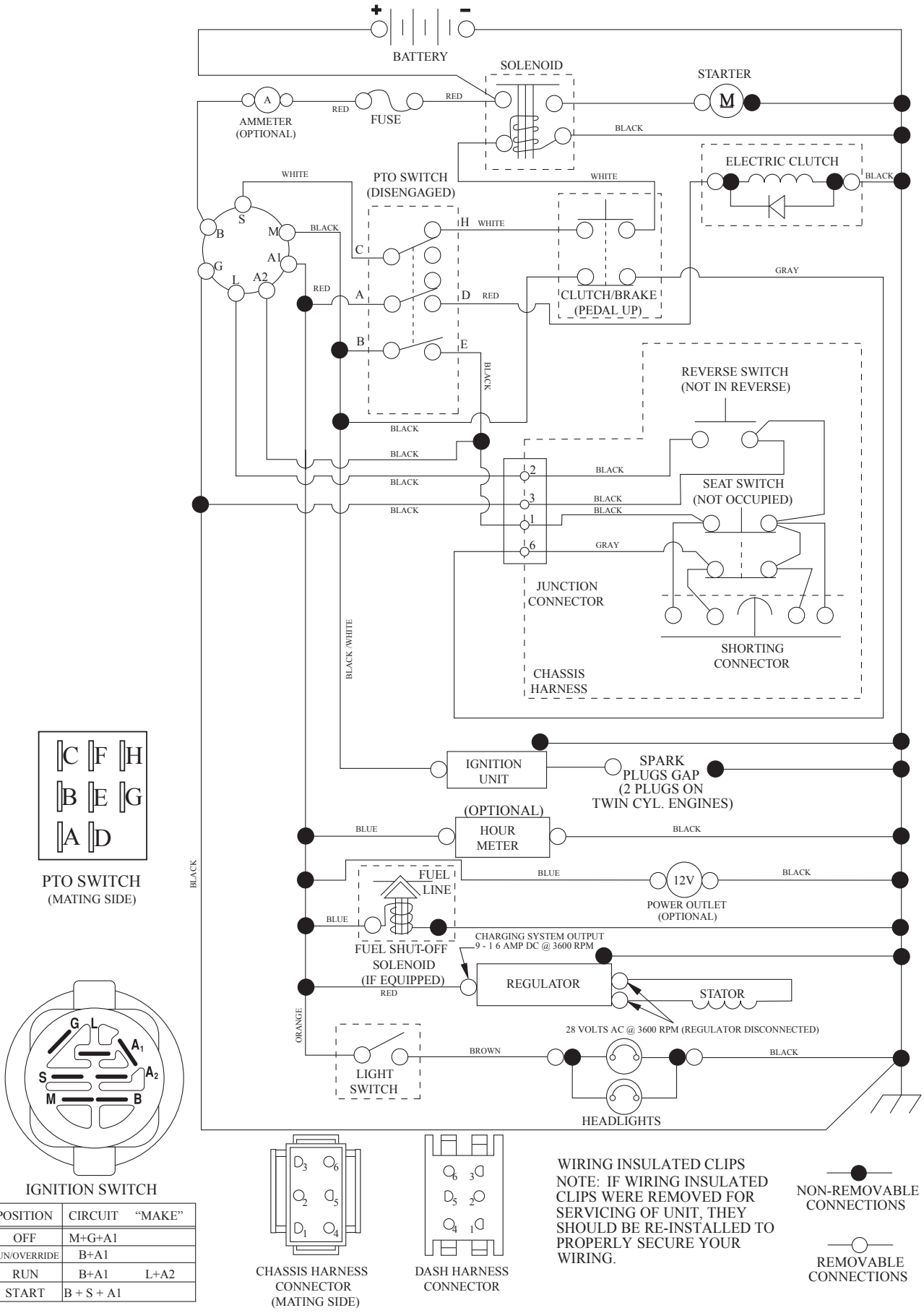

WIRING INSULATED CLIPS
NOTE: IF WIRING INSULATED CLIPS WERE REMOVED FOR SERVICING OF UNIT, THEY SHOULD BE RE-INSTALLED TO PROPERLY SECURE YOUR WIRING.

POSITION	CIRCUIT	"MAKE"
OFF	M+G+A1	
RUN/OVERRIDE	B+A1	
RUN	B+A1	L+A2
START	B + S + A1	

Downloaded from www.Manualslib.com manuals search engine

https://truckmanualshub.com/

TRACTOR - MODEL NO. (289580), PRODUCT NO. LGTH2454

ELECTRICAL

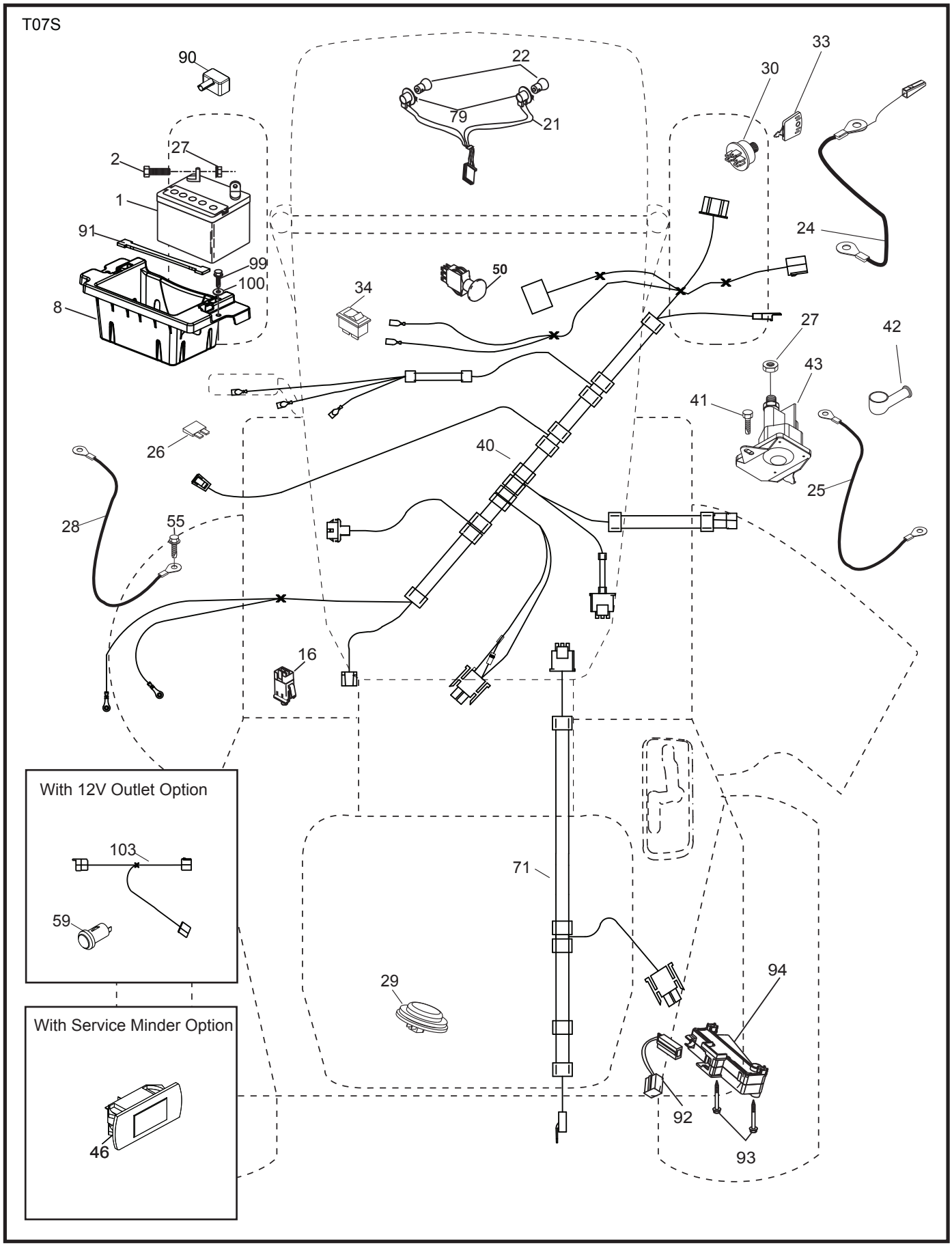

Downloaded from www.Manualslib.com manuals search engine

https://truckmanualshub.com/

ELECTRICAL

KEY NO.	PART NO.	DESCRIPTION
1	532 16 34-65	Battery
2	874 76 04-12	Bolt Hex Hd 1/4-20 unc x 3/4
8	532 18 64-91	Battery Box
16	532 17 61-38	Switch Interlock
21	532 18 37-59	Harness Socket Light
22	532 00 41-52	Bulb, Light # 1156
24	532 40 02-53	Cable Battery
25	532 41 28-95	Cable Starter
26	532 17 51-58	Fuse
27	873 51 04-00	Nut Keps Hex 1/4-20 unc
28	532 14 54-91	Cable Ground 21" Blk 6 Ga.
29	532 40 15-45	Switch Seat
30	532 19 33-50	Switch Ign
33	532 41 19-35	Key/Chain
34	532 11 07-12	Switch Light/Reset
40	532 40 11-04	Harness Ign. Dash
41	817 72 04-08	Screw Thd Cut 1/4-20 x 1/2
42	532 13 15-63	Cover Terminal Red
43	532 19 25-07	Solenoid
46	532 40 17-63	Gauge Hourmeter
50	532 17 46-51	Switch PTO
55	817 06 05-12	Screw Thdrol 5/16-18 x 3/4
59	532 40 03-03	Outlet 12-Volt
71	532 19 42-76	Harness Ign
79	532 17 52-42	Socket Asm Bulb Twistlock
90	532 40 07-24	Cover Terminal Battery
91	532 19 02-70	Strap Battery
92	532 19 66-15	Harness Pigtail Console ROS
93	532 19 25-40	Screw Plastite 10-14 x 2.0
94	532 19 18-34	Module Reverse ROS
99	817 67 04-12	Screw Hexwsh Thdrol 1/4-20 x 3/4
100	819 09 14-16	Washer 9/32 x 7/8 x 16 Ga.
103	532 40 79-62	Harness Pigtail 12V Outlet

NOTE: All component dimensions given in U.S. inches
1 inch = 25.4 mm

Downloaded from www.Manualslib.com manuals search engine

https://truckmanualshub.com/

TRACTOR - MODEL NO. (289580), PRODUCT NO. LGTH2454

CHASSIS

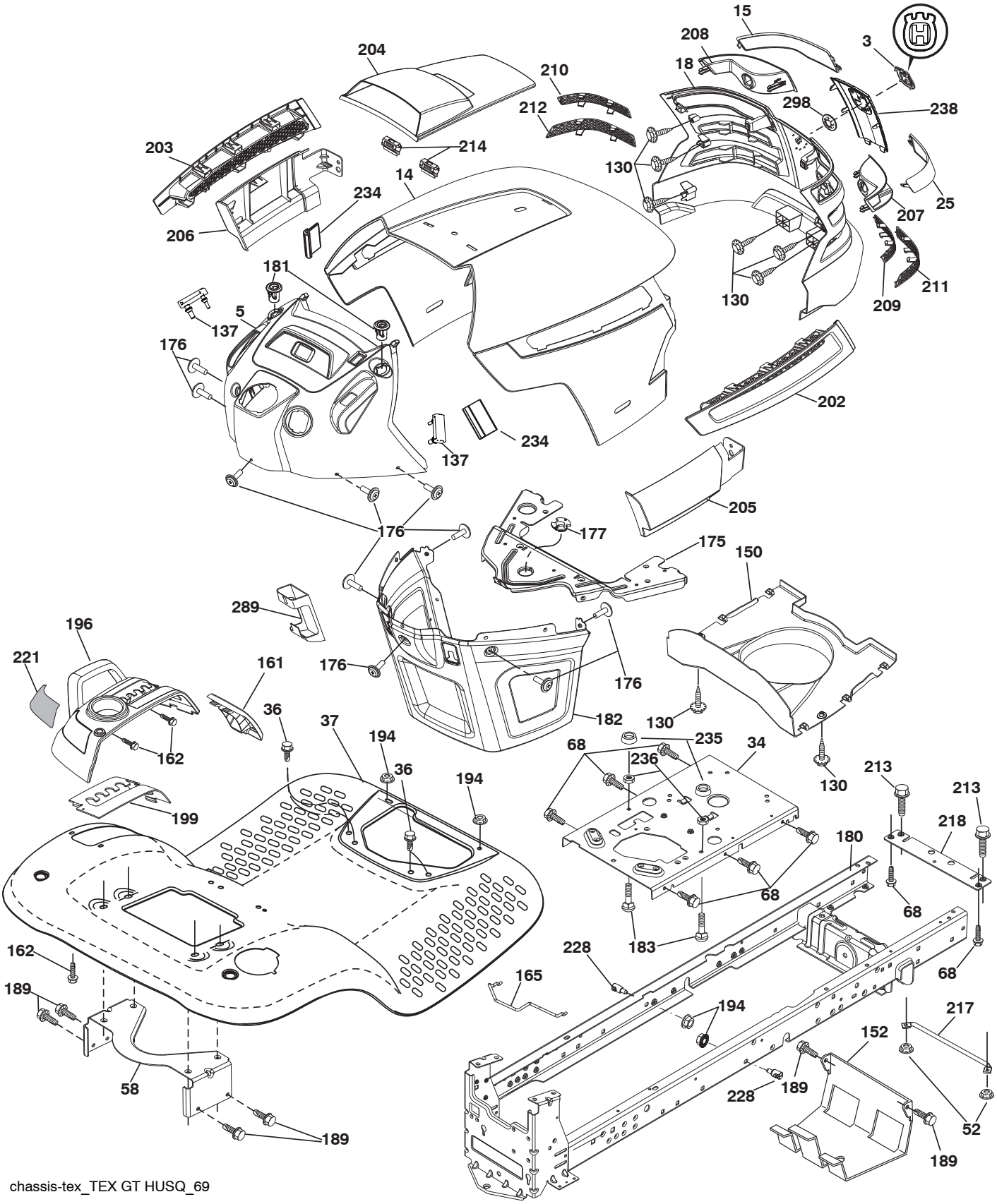

chassis-tex_TEX GT HUSQ_69

Downloaded from www.Manualslib.com manuals search engine

https://truckmanualshub.com/

TRACTOR - MODEL NO. (289580), PRODUCT NO. LGTH2454

CHASSIS

KEY NO.	PART NO.	DESCRIPTION
3	532 40 50-12	Logo
5	532 40 87-01	Dash
14	532 41 10-46	Hood
15	532 19 89-07	Lens LH
18	532 40 86-07	Grille
25	532 19 89-06	Lens RH
34	532 19 61-25	Plate Engine
36	817 06 05-12	Screw 5/16-18 x 3/4
37	532 40 18-25	Fender
52	873 68-05-00	Nut Crown Lock 5/16-18
58	532 19 43-14	Bracket Fender
68	817 49 05-08	Screw 5/16-18 x 1/2
130	532 41 63-58	Screw #10 x 0.750 BOS Thread
137	532 40 75-90	Bumper Dash
150	532 19 85-12	Duct Heat Hood
152	532 19 95-35	Shield Browning/Debris
161	532 40 18-26	Console Fuel Window
162	532 14 24-32	Screw Hex Wsh Hi-Lo 1/4 x 1/2
165	532 19 68-26	Bracket Support Tank
175	532 19 63-04	Crossmember
176	532 40 07-76	Screw 10-24 x 5/8 Wshd Qdrx
177	532 19 52-27	Bushing Steering
180	532 19 54-77	Chassis
181	532 40 30-25	Bushing MMT Fender
182	532 40 68-59	Dash Lower
183	874 52 05-20	Bolt 5/16-18 x 1-1/4
189	817 00 05-12	Screw 5/16-18 x 3/4
194	873 90 05-00	Nut Lock 5/16-18
196	532 40 02-99	Console Asm. Deck Lift
199	532 19 82-59	Plate Deck Lift
202	532 40 30-48	Vent Side Hood RH
203	532 40 30-76	Vent Side Hood LH
204	532 41 66-13	Vent Asm Hood Top
205	532 40 17-09	Skirt Hood Side RH
206	532 40 17-11	Skirt Hood Side LH
207	532 19 71-98	Bezel RH
208	532 19 71-99	Bezel LH
209	532 19 91-30	Insert Hex Top RH
210	532 19 91-31	Insert Hex Top LH
211	532 19 91-32	Insert Hex Bottom RH
212	532 19 91-33	Insert Hex Bottom LH
213	874 76 05-12	Bolt Hex Hd 5/16-18 unc x 3/4
214	532 19 91-45	Clip Retainer
217	532 40 91-67	Rod Pivot
218	532 19 63-95	Hood Stop X Piece
221	532 19 89-09	Reflector LH
228	532 19 51-61	Stud Fastener
234	532 40 47-42	Bumper Hood
235	532 40 61-29	Spacer Fender
236	873 93 05-00	Nut Center Lock 5/16-18 unc
238	532 40 86-06	Trim
289	532 40 35-71	Plug Cruise/Phone
298	532 11 04-52	Nut Push

NOTE: All component dimensions given in U.S. inches
1 inch = 25.4 mm

Downloaded from www.Manualslib.com manuals search engine

https://truckmanualshub.com/

TRACTOR - MODEL NO. (289580), PRODUCT NO. LGTH2454

DRIVE

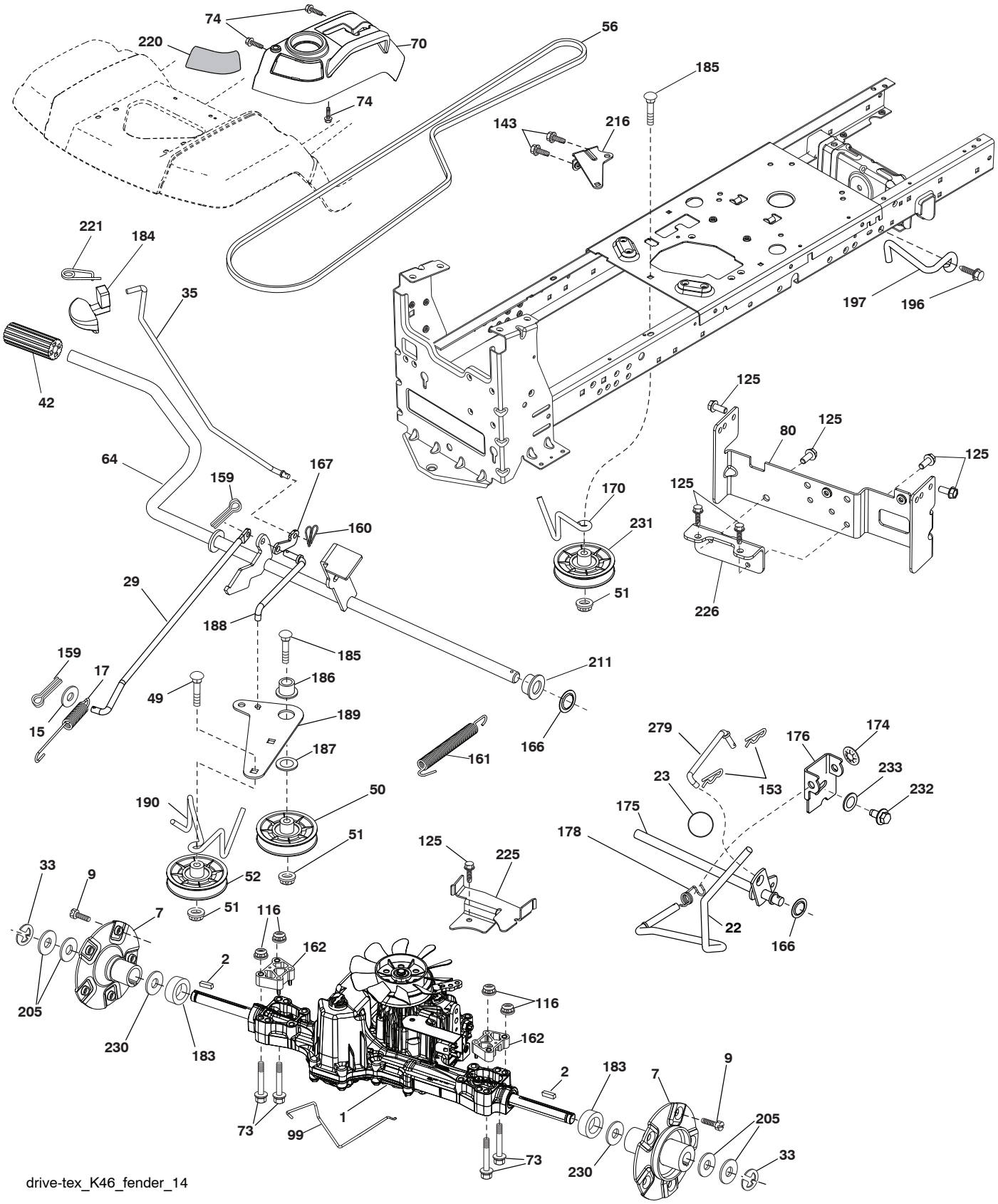

Downloaded from www.Manualslib.com manuals search engine

https://truckmanualshub.com/

TRACTOR - MODEL NO. (289580), PRODUCT NO. LGTH2454

DRIVE

KEY NO.	PART NO.	DESCRIPTION
1	- - - - - - - - -	Transaxle, TUFFTORQ K46 AW
2	532 18 62-11	Key
7	532 19 98-44	Hub Asm. Wheel Rear 22" TX GT .06
9	532 14 00-80	Bolt Hub Wheel Rear
15	819 13 13-16	Washer 13/32 x 13/16 x 16 Ga.
17	532 41 36-78	Spring Brake
22	532 19 73-29	Rod Shift
23	532 14 08-45	Knob
29	532 40 38-06	Rod, Brake
33	812 00 00-01	Ring E
35	532 19 95-91	Rod Brake Park
42	532 12 48-72	Cover Foot Pedal
49	872 11 06-14	Bolt
50	532 19 43-27	Pulley Idler Flat
51	873 90 06-00	Lock Nut 3/8-16
52	532 19 43-26	Idler V-Groove 910" Offset
56	532 13 09-69	V-Belt Drive
64	532 19 62-00	Shaft Asm. Pedal Brake Control
70	532 40 02-98	Console Asm.
73	874 49 05-60	Bolt Hex Flghd 5/16-18 x 3.75
74	532 14 24-32	Screw 1/4 x 1/2
80	532 41 00-24	Strap Torque
99	532 41 57-43	Rod Bypass
116	873 90 05-00	Nut Lock Hex Flange 5/16-18
125	817 00 05-12	Screw 5/16-18 x 3/4
143	817 49 05-08	Screw 5/16-18 x 1/2
153	532 12 47-88	Retainer Spring
159	876 02 04-12	Pin Cotter 1/8 x 3/4
160	532 16 94-84	Retainer Clip
161	532 10 57-09	Spring Return Clutch
162	532 19 57-85	Spacer Transaxle 18 and 22
166	532 42 91-64	Nut Push
167	532 40 52-57	Latch Brake Parking
170	532 41 34-30	Keeper Belt Centerspan
174	532 19 72-89	Nut Push
175	532 40 62-08	Shaft Asm Shift
176	532 19 62-14	Arm Clevis Rod Shift
178	532 19 74-56	Spring Shift
183	532 40 04-24	Spacer Split
184	532 40 31-18	Handle Parking Brake
185	872 11 06-22	Bolt Rdhd Sqnk 3/8-16 x 2-3/4 Gr. 5
186	532 19 43-21	Spacer Retainer
187	819 13 32-10	Washer
188	532 19 43-23	Link Clutch Ground Drive
189	532 19 43-17	Bellcrank Ground Drive
190	532 19 43-18	Keeper Bellcrank Ground Drive
196	817 00 06-16	Screw 3/8-16 x 1
197	532 19 97-69	Link Clutch Anti-Rotation
205	532 12 17-48	Washer
211	532 19 62-12	Bushing Brake Shaft
216	532 19 61-31	Bracket Pulley Idler
220	532 19 89-08	Reflector RH
221	532 40 31-87	Retainer Spring Clip Handle
225	532 40 33-19	Keeper Belt Trans.
226	532 40 08-31	Bracket Mount Torque
230	532 18 89-67	Washer Hardened
231	532 40 72-87	Idler V-Groove 1.688" Offset
232	874 78 07-16	Bolt 7/16-14 x 1 Gr. 5
233	532 40 52-96	Washer Serrated
279	532 40 62-07	Link Shift

NOTE: All component dimensions given in U.S. inches
1 inch = 25.4 mm

Downloaded from www.Manualslib.com manuals search engine

https://truckmanualshub.com/

TRACTOR - MODEL NO. (289580), PRODUCT NO. LGTH2454

ENGINE

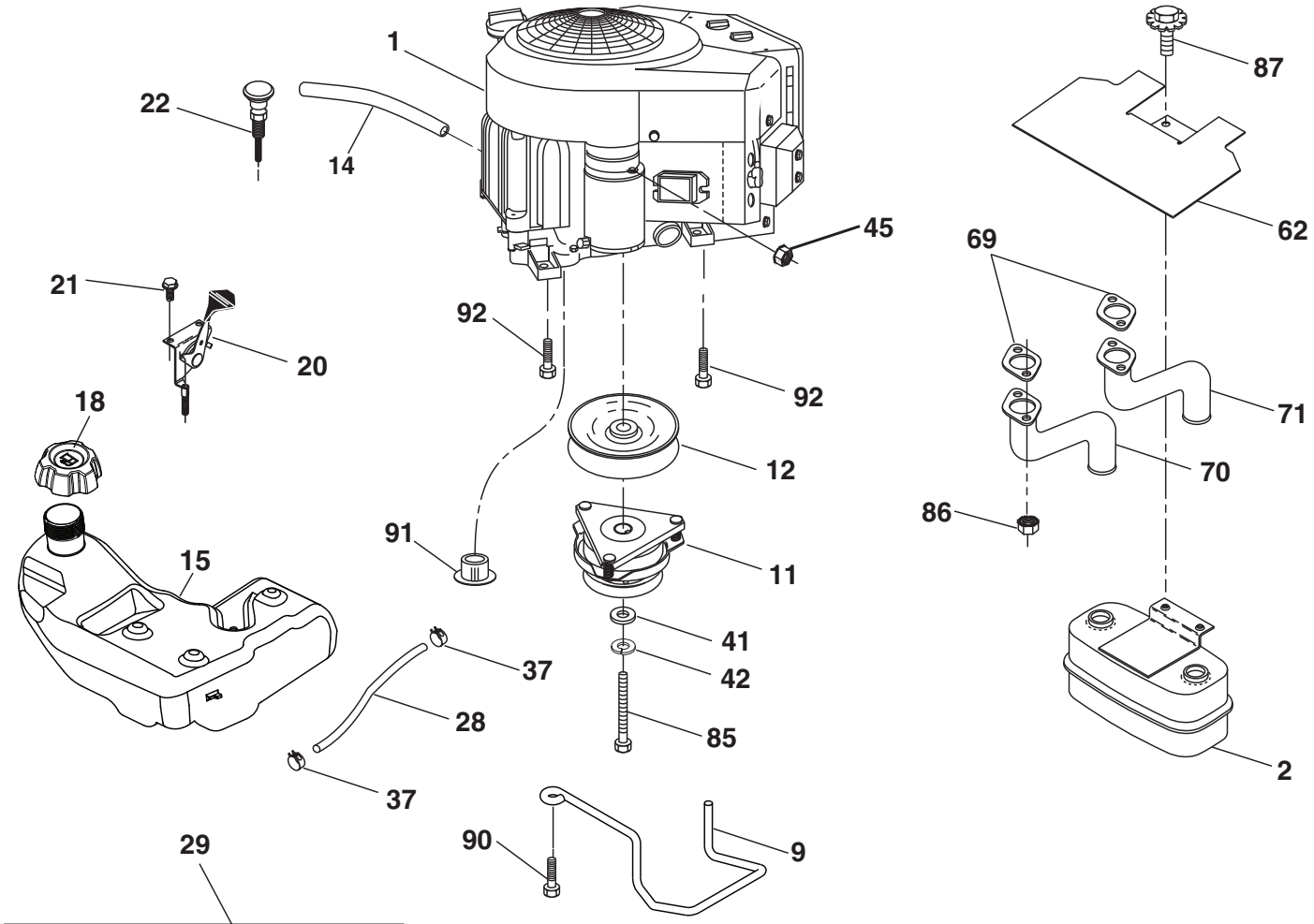

SPARK ARRESTER KIT

engine-tex_Kawa-2cyl_7

Downloaded from www.Manualslib.com manuals search engine

https://truckmanualshub.com/

ENGINE

KEY NO.	PART NO.	DESCRIPTION
1	- - - - - -	Engine Kawa Model No. FR691V-AS06
2	532 14 97-23	Muffler
9	532 19 43-20	Keeper Belt Engine
11	532 17 93-35	Clutch Electric
12	532 19 43-43	Pulley Engine
14	532 14 84-56	Tube Drain Oil Easy
15	532 19 34-99	Tank Fuel 4.0
18	532 43 02-17	Cap Asm
20	532 17 83-85	Control Throttle
21	532 41 63-58	Screw #10 x 0.750 BOS Thread
22	532 19 15-96	Control Choke
28	532 40 11-35	Fuel Line
29	532 13 71-80	Spark Arrester Kit
37	532 12 34-87	Clamp Hose
41	532 12 61-97	Washer 1-1/2 OD x 15/32 ID x .250
42	810 04 07-00	Washer Lock 7/16
45	873 51 04-00	Nut Keps Hex 1/4-20 unc
62	532 43 40-17	Shield Heat Muffler
69	532 17 81-51	Gasket
70	532 42 47-65	Tube Exhaust LH
71	532 42 47-66	Tube Exhaust RH
85	532 17 99-53	Bolt Hex 7/16-20 x 3.75 Gr. 5
86	532 18 43-62	Nut Hex Flange Toplock M8-1.25
87	532 19 82-39	Bolt 5/16-18 unc x 1 w/Sems
90	817 00 06-16	Screw 3/8-16 x 1
91	532 18 74-95	Bushing
92	817 12 06-16	Screw 3/8-16 x 1

NOTE: All component dimensions given in U.S. inches
1 inch = 25.4 mm

For engine service and replacement parts, call the toll free number for your engine manufacturer listed below:

Kawasaki 1-949-460-5688

Downloaded from www.Manualslib.com manuals search engine

https://truckmanualshub.com/

TRACTOR - MODEL NO. (289580), PRODUCT NO. LGTH2454

STEERING ASSEMBLY

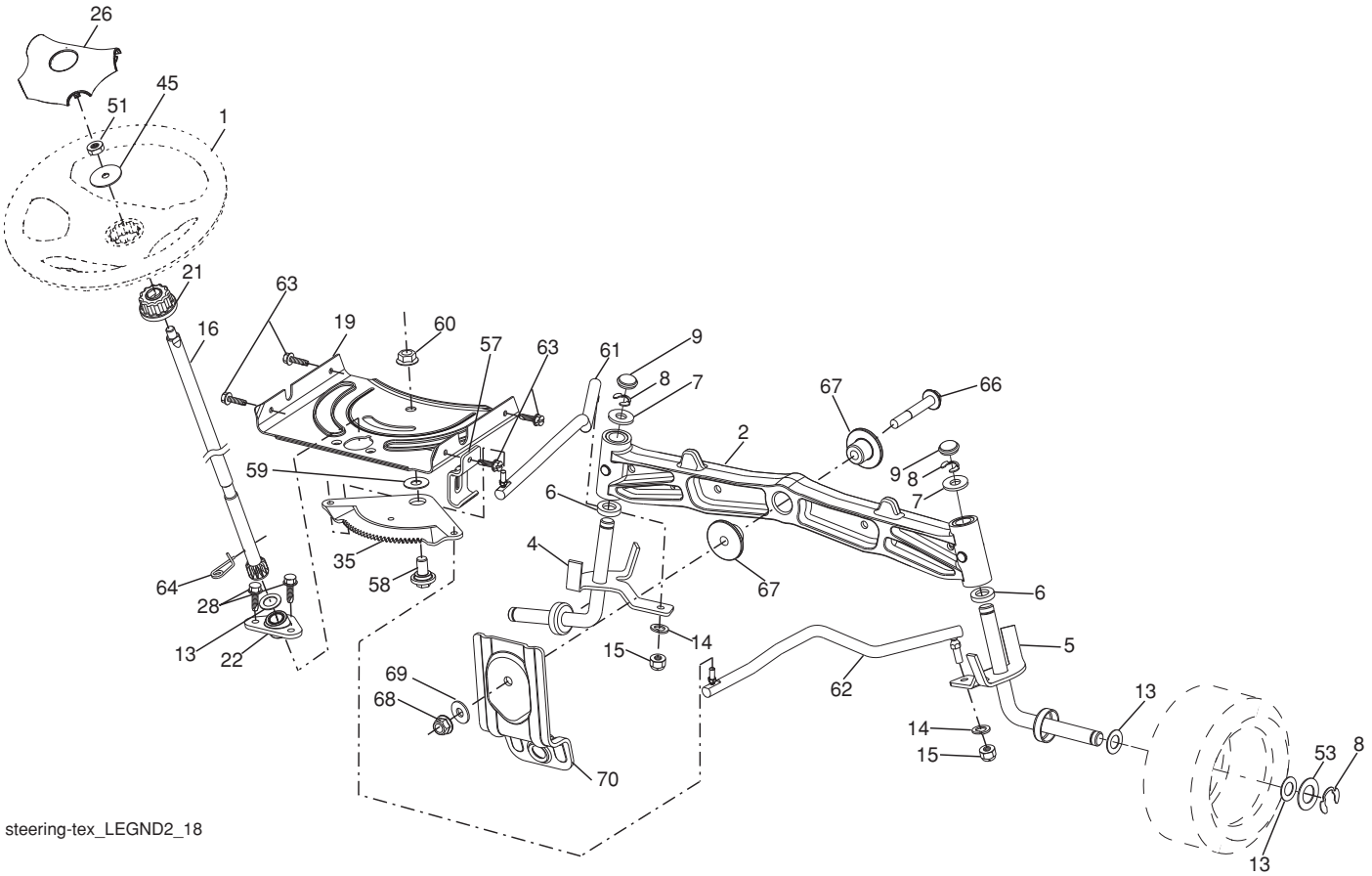

KEY NO.	PART NO.	DESCRIPTION
1	532 42 34-69	Wheel, Steering
2	532 19 59-68	Axle Asm., Front
4	532 40 30-89	Spindle Asm., LH
5	532 40 30-90	Spindle Asm., RH
6	532 12 49-31	Bearing, Race Thrust Harden
7	532 12 17-48	Washer 25/32 x 1-5/8 x 16 Ga.
8	812 00 00-29	Ring, Klip #T5304-75
9	532 12 12-32	Cap, Spindle
13	532 12 17-49	Washer 25/32 x 1-1/4 x 16 Ga.
14	810 04 06-00	Washer, Lock Hvy Hlcl Spr 3/8
15	873 54 06-00	Nut, Crown Lock 3/8-24 unf
16	532 40 82-19	Shaft Steering
19	532 19 47-29	Plate Steering
21	532 18 67-37	Adapter, Wheel Steering
22	532 42 05-37	Strg. Supt. Lower
26	532 41 59-87	Insert, Wheel Steering
28	817 00 06-12	Screw 3/8-16 x 3/4
35	532 19 47-32	Gear, Sector Plate
45	819 18 38-12	Washer 9/16 x 2-3/8 x 12 Ga.

KEY NO.	PART NO.	DESCRIPTION
51	873 94 08-00	Nut Hex Jam Toplock 1/2-20 unf
53	532 18 89-67	Washer Hardened .793 x 1.637 x .060
57	532 19 72-46	Bracket Upstop
58	532 19 47-47	Bolt Shoulder Sector Pivot CFM
59	532 19 47-48	Washer Thrust Sector Steering
60	873 97 10-00	Nut Flange Lock 5/8-11
61	532 19 47-40	Draglink, LH
62	532 19 47-41	Draglink, RH
63	817 00 05-12	Screw 5/16-18 x 3/4
64	532 19 98-49	Retainer Clip Spring Steering
66	871 02 07-48	Bolt Hex Fghd 7/16-14 x 3 Serr
67	532 19 47-37	Bushing PM Front Axle
68	873 90 07-00	Nut Lock Flange 7/16-14 Gr. 5
69	532 19 91-62	Washer 1.5 x .505 x .118
70	532 19 61-97	Bracket Deck Susp. Front

NOTE: All component dimensions given in U.S. inches
1 inch = 25.4 mm

Downloaded from www.Manualslib.com manuals search engine

https://truckmanualshub.com/

SEAT ASSEMBLY

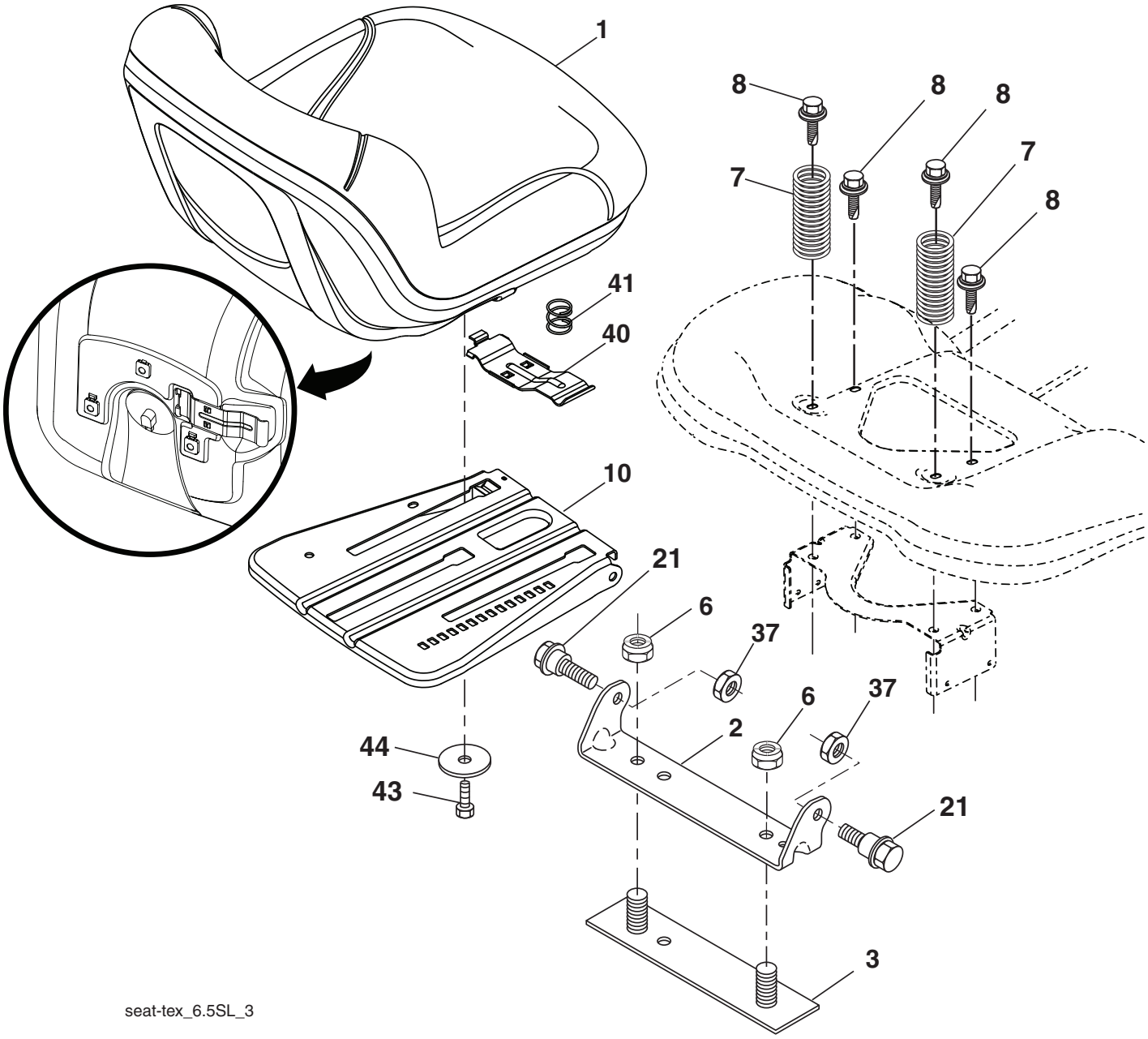

KEY NO.	PART NO.	DESCRIPTION
1	532 42 40-68	Seat
2	532 18 01-66	Bracket Pivot Fender
3	532 14 06-75	Strap, Asm Fender
6	873 80 06-00	Nut, Lock w/Ins. 3/8-16 unc
7	532 12 41-81	Spring, Seat Cprsn
8	532 17 18-77	Bolt 5/16-18 unc x 3/4 w/Sems
10	532 19 69-77	Pan, Seat
21	532 17 18-52	Bolt, Shoulder 5/16-18

KEY NO.	PART NO.	DESCRIPTION
37	873 80 05-00	Nut, Lock 5/16-18 unc
40	532 19 76-61	Handle Slide Seat
41	532 19 82-00	Spring Latch Seat
43	874 76 06-12	Bolt 3/8-16 x 3/4
44	819 13 38-12	Washer 13/32 x 2-3/8 x 12 Ga.

NOTE: All component dimensions given in U.S. inches
1 inch = 25.4 mm

Downloaded from www.Manualslib.com manuals search engine

https://truckmanualshub.com/

TRACTOR - MODEL NO. (289580), PRODUCT NO. LGTH2454

MOWER DECK

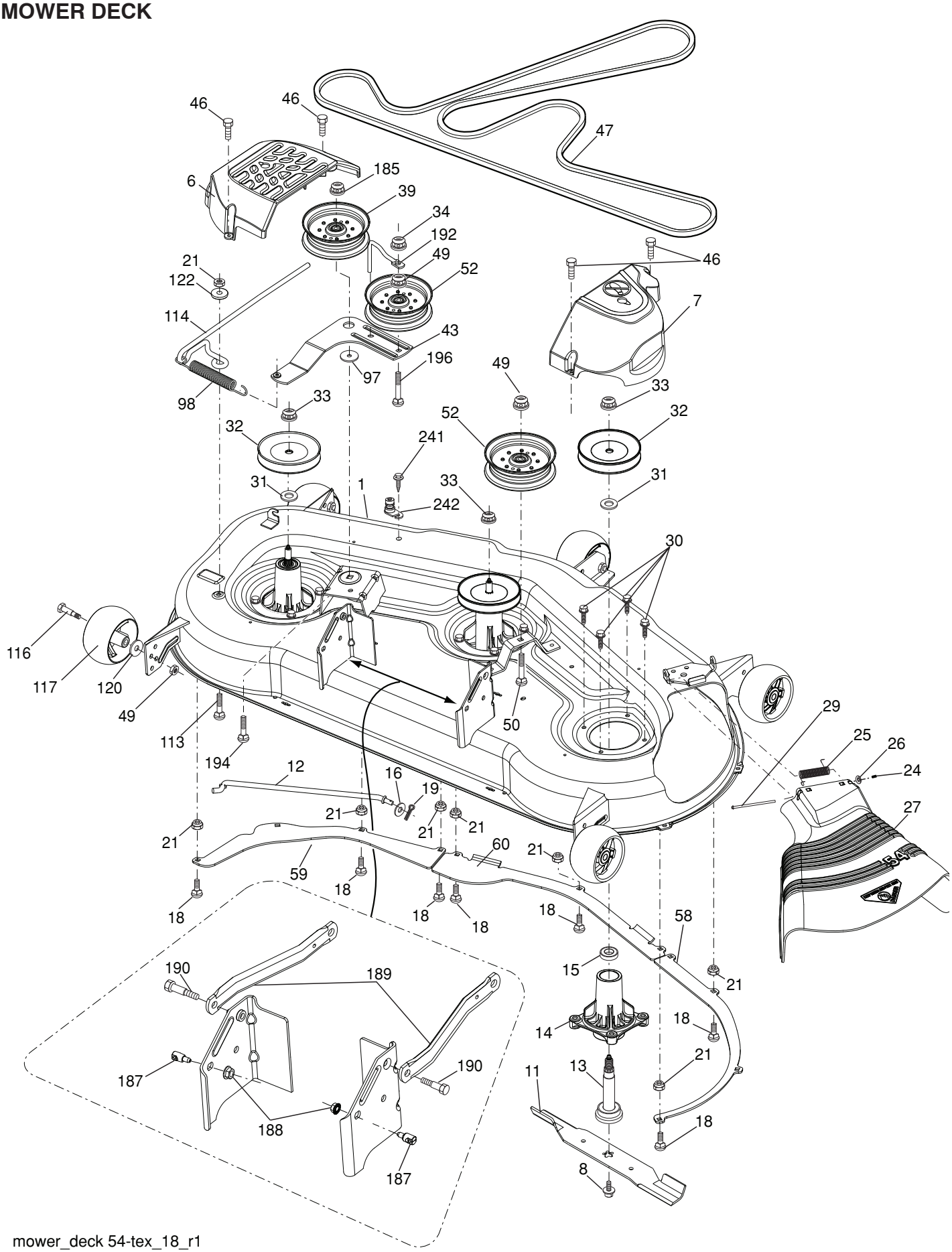

mower_deck 54-tex_18_r1

Downloaded from www.Manualslib.com manuals search engine

https://truckmanualshub.com/

TRACTOR - MODEL NO. (289580), PRODUCT NO. LGTH2454

MOWER DECK

KEY NO.	PART NO.	DESCRIPTION
1	532 40 31-25	Deck Weldment Mower
6	532 19 60-66	Cover Mandrel LH
7	532 19 71-81	Cover Mandrel RH
8	532 19 30-03	Bolt 7/16 Asm. Blade
11	532 18 72-56	Blade Bagging
- -	532 18 72-55	Blade Mulching
12	532 40 48-51	Rod Anti-Sway
13	532 18 72-91	Shaft Asm. w/Lower Bearing
14	532 18 72-81	Housing, Mandrel
16	819 13 13-12	Washer 3/8
15	532 11 04-85	Bearing, Ball, Mandrel
18	872 14 05-05	Bolt Carriage 5/16-18 x 5/8
19	532 19 42-08	Pin Cotter 5/16 Bowtie
21	873 68 05-00	Nut, Crownlock 5/16-18 unc
24	532 10 53-04	Cap Sleeve
25	532 17 81-02	Spring, Torsion
26	532 11 04-52	Nut, Push
27	532 18 89-38	Deflector Shield
29	532 13 14-91	Rod, Hinge
30	532 17 39-84	Screw, Thdroll Washer Head
31	532 18 76-90	Washer, Spacer Mower Vented
32	532 15 35-35	Pulley, Mandrel
33	532 40 02-34	Nut, Flg. Top Lock
34	873 68 06-00	Nut Crownlock 3/8-16 unc
39	532 19 73-80	Pulley, Idler, 4.50
43	532 19 60-65	Arm, Idler
46	532 13 77-29	Screw, Thdroll. 1/4-20 x 5/8
47	532 19 61-03	Belt Deck Drive
49	873 90 06-00	Nut, Lock Flg. 3/8-16 unc
50	872 11 06-16	Bolt Rdhd Sqnk 3/8-16 unc x 2
52	532 19 73-79	Pulley Idler
58	532 18 73-42	Baffle Right
59	532 18 73-44	Baffle Left
60	532 18 76-07	Baffle Center
97	532 17 85-15	Washer Hardened
98	532 19 61-05	Spring Drive
113	872 11 05-08	Bolt Rdhd Sqnk 5/16-18 x 3/4
114	532 18 75-56	Rod Tension Relief
116	532 19 34-06	Bolt, Shoulder
117	532 17 48-73	Gauge Wheel
120	819 13 20-12	Washer 13/32 x 1-1/4 x 12 Ga.
122	532 18 75-57	Bushing Tension Relief
185	873 90 07-00	Nut Lock Flange 7/16-14 Gr. 5
187	532 19 51-61	Stud Fastener w/"D" Anti-Rotation
188	873 90 05-00	Nut Lock Hex Flange
189	532 19 51-85	Arm Susp. Mower Rear
190	532 19 65-39	Bolt Shoulder
192	532 19 84-68	Keeper Belt Idler
194	872 14 07-16	Bolt Carr Sqnk 7/16-24 x 2
196	872 14 06-20	Bolt Rdhd 3/8-16 x 2-1/2 Gr. 5
241	532 15 29-27	Screw #10-32.5 3/8 Flange
242	532 41 55-98	Port Washout
- -	532 18 72-92	Mandrel Asm. Service Mandrel Assembly (Includes housing, shaft assembly, and bearing only - pulley/nut/washer and blade bolt/ washers not included)
- -	532 43 29-07	Replacement Mower, Complete

NOTE: All component dimensions given in U.S. inches
1 inch = 25.4 mm

Downloaded from www.Manualslib.com manuals search engine

https://truckmanualshub.com/

TRACTOR - MODEL NO. (289580), PRODUCT NO. LGTH2454

MOWER LIFT

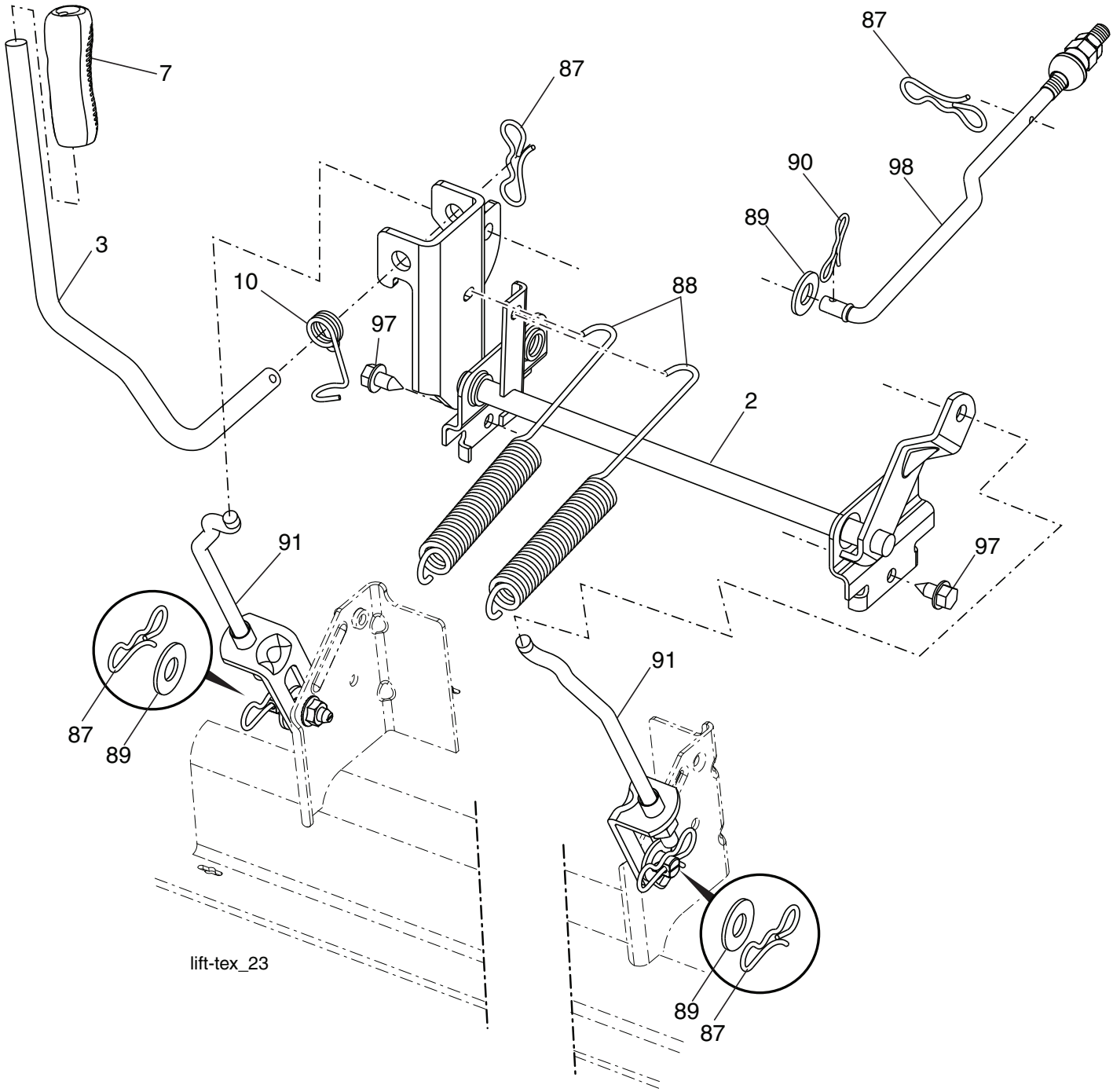

KEY NO.	PART NO.	DESCRIPTION
2	532 42 20-27	Shaft Asm., Lift
3	532 19 52-30	Lever Asm., Lift RH
7	532 41 15-55	Grip, Lever
10	532 19 63-14	Spring Torsion
87	532 19 42-09	Pin Cotter 7/16 Bow Tie Lock
88	532 19 53-04	Spring Lift Assist
89	819 19 19-12	Washer Clear Zinc
90	532 19 42-08	Pin Cotter 5/16 Bow Tie Lock
91	532 40 34-07	Link Lift Susp Mower Rear
97	817 00 06-12	Screw 3/8-16 x 3/4
98	532 19 52-64	Link Lift Susp. Front Mower

NOTE: All component dimensions given in U.S. inches
1 inch = 25.4 mm

Downloaded from www.Manualslib.com manuals search engine

https://truckmanualshub.com/

TRACTOR - - MODEL NUMBER (289580)

KAWASAKI ENGINE - MODEL NUMBER FR691V, TYPE NUMBER AS06

CYLINDER/CRANKCASE

E0110-A652A

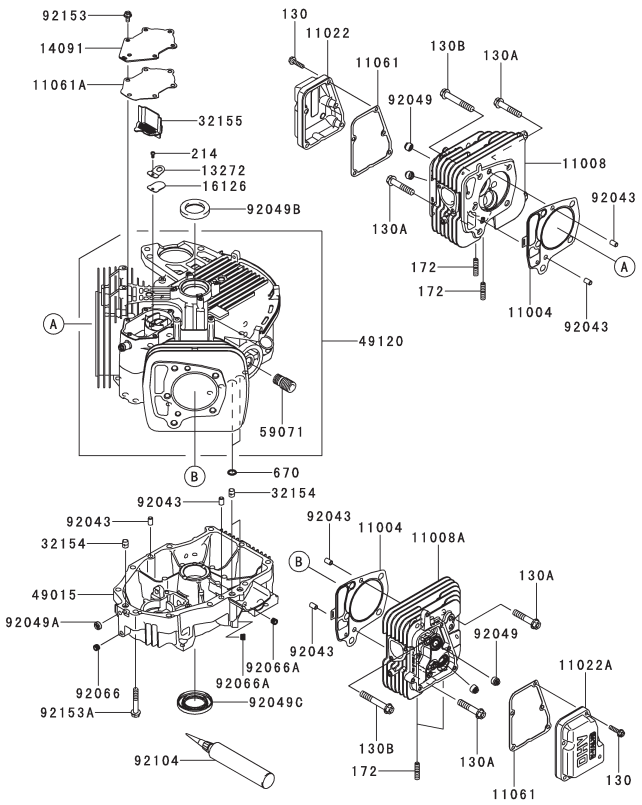

PISTON/CRANKSHAFT

E0120-A407A

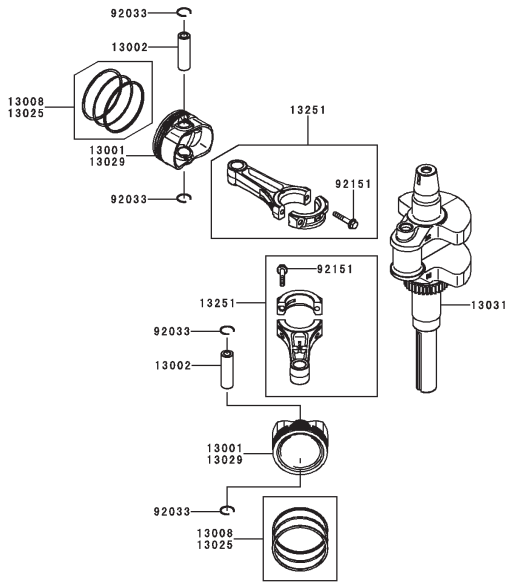

VALVE/CAMSHAFT

E0130-A176A

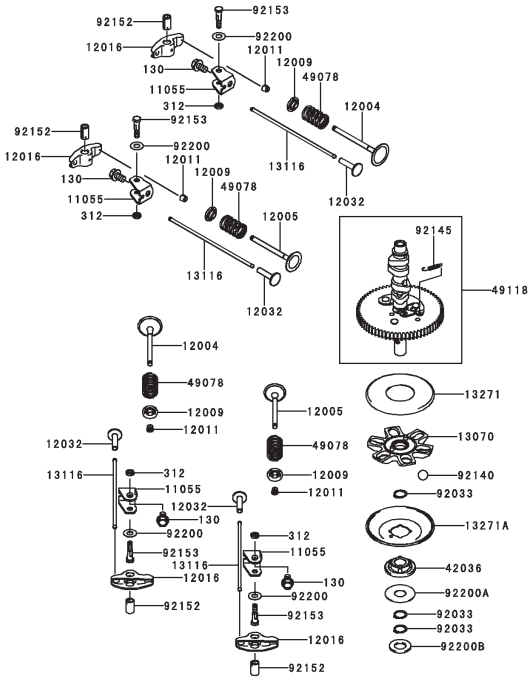

LUBRICATION-EQUIPMENT

E0140-A474A

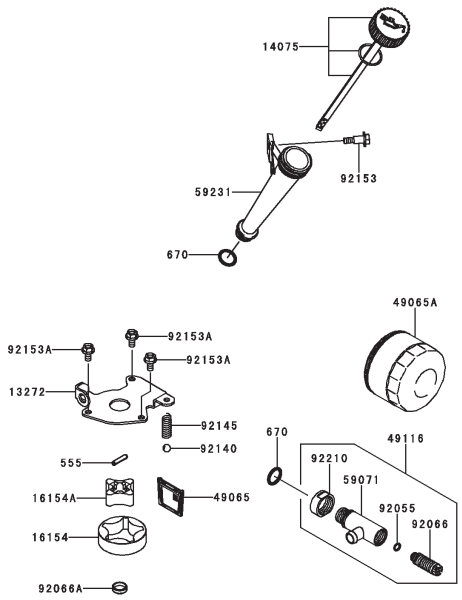

Downloaded from www.Manualslib.com manuals search engine

https://truckmanualshub.com/

TRACTOR - - MODEL NUMBER (289580)

KAWASAKI ENGINE - MODEL NUMBER FR691V, TYPE NUMBER AS06

COOLING-EQUIPMENT

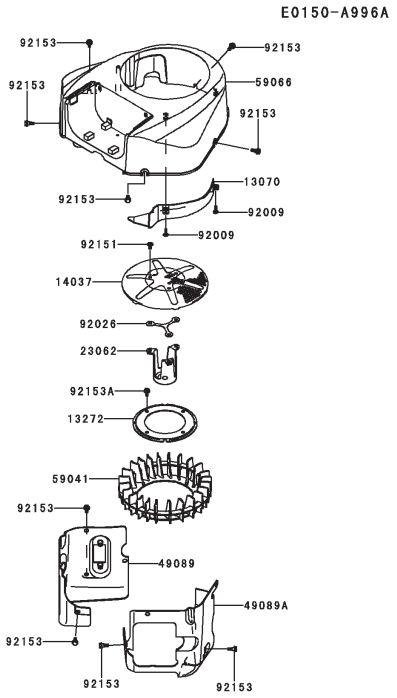

CONTROL-EQUIPMENT

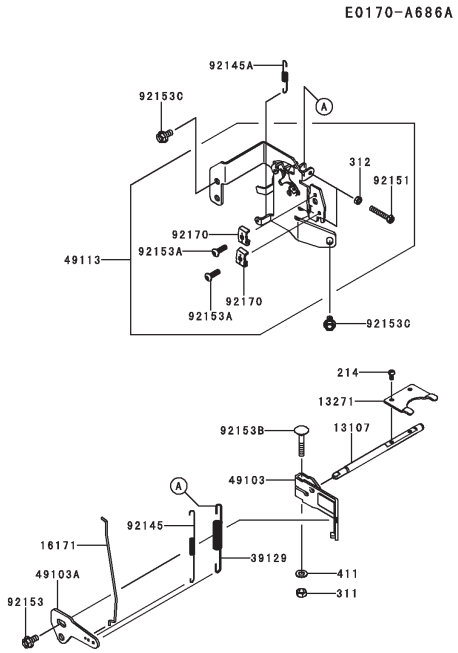

ELECTRIC-EQUIPMENT

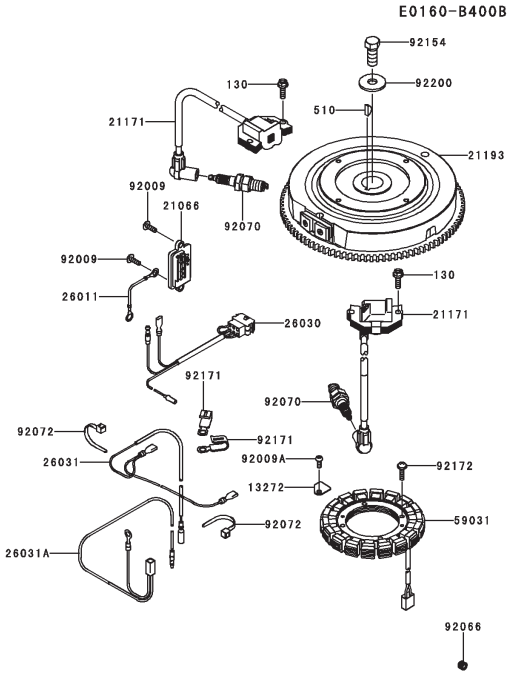

CARBURETOR

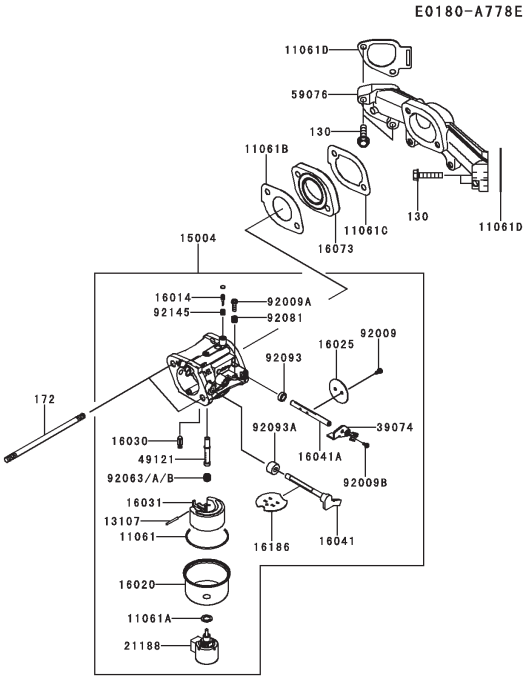

Downloaded from www.Manualslib.com manuals search engine

https://truckmanualshub.com/

TRACTOR - - MODEL NUMBER (289580)

KAWASAKI ENGINE - MODEL NUMBER FR691V, TYPE NUMBER AS06

AIR-FILTER/MUFFLER

E0190-B178A

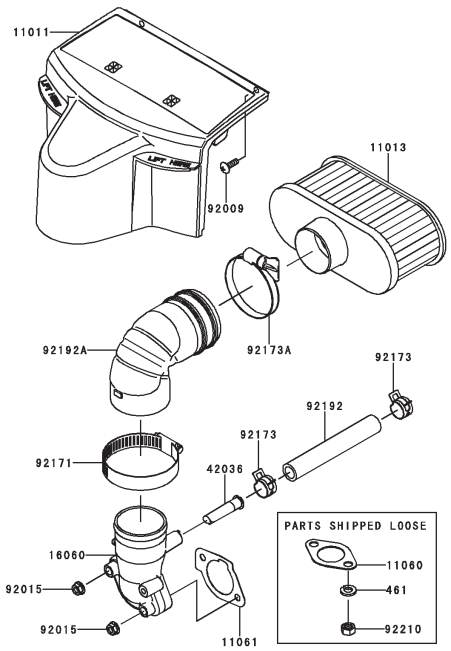

STARTER

E0210-A487A

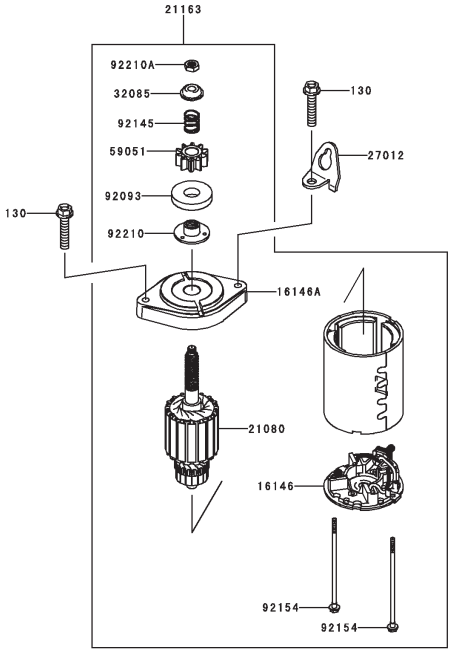

FUEL-TANK/FUEL-VALVE

E0200-A752A

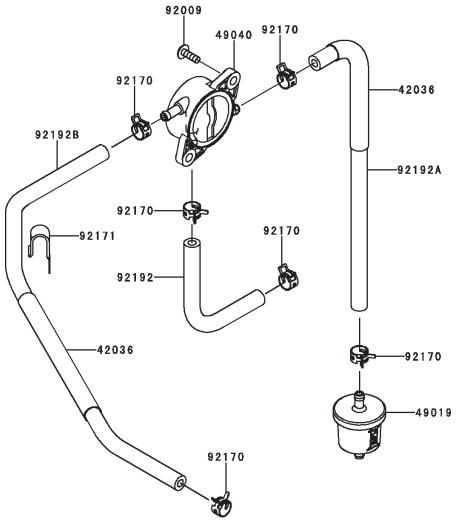

LABEL

F0290-B505A

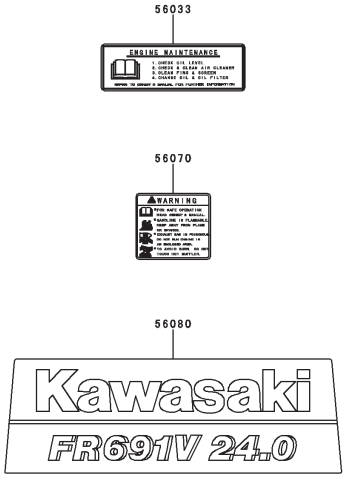

Downloaded from www.Manualslib.com manuals search engine

https://truckmanualshub.com/

TRACTOR - - MODEL NUMBER (289580)

KAWASAKI ENGINE - MODEL NUMBER FR691V, TYPE NUMBER AS06

CYLINDER/CRANKCASE

11004	11004-7026	Gasket-Head
11008	11008-7039	Head-Comp-Cylinder,#1
11008a	11008-7040	Head-Comp-Cylinder,#2
11022	11022-7019	Case-Rocker,#1
11022a	11022-7020	Case-Rocker,#2
11061	11061-7083	Gasket,Case-Rocker
11061a	11061-7094	Gasket,Breather
13272	13272-7004	Plate,Breather
14091	14091-7064	Cover,Breather
16126	16126-7020	Valve,Breather
32154	32154-7019	Pipe
32155	32155-7003	Pipe,Breather
49015	49015-7106	Cover-Crankcase
49120	49120-7142	Crankcase-Comp
59071	59071-2079	Joint
92043	92043-1263	Pin
92049	92049-7001	Seal-Oil,Rvc2 6x11x10.2
92049a	92049-7005	Seal-Oil,So 8x14x5 Hs
92049b	92049-7010	Seal-Oil,Sd 35x48x8 R Hs
92049c	92049-7028	Seal-Oil,38x62x8mtclv
92066	92066-7023	Plug
92066a	92066-7026	Plug
92104	92104-7001	Gasket-Liquid,Tb1217h
92153	92153-7043	Bolt,6x12
92153a	92153-7054	Bolt,8x50
130	130aa0625	Bolt-Flanged,6x25
130a	130ca1050	Bolt-Flanged,10x50
130b	130ca1065	Bolt-Flanged,10x65
172	172ba0818	Bolt-Stud,8x18
214	214aa0408	Screw-Pan+-,4x8
670	670b2011	O Ring,11mm

PISTON/CRANKSHAFT

13001	13001-7027	Piston-Engine
13002	13002-7006	Pin-Piston
13008	13008-7005	Ring-Set-Piston
13025	13025-7009	Ring-Set-Piston L,0.5
13029	13029-7010	Piston-Engine L,0.5
13031	13031-7083	Crankshaft-Comp
13251	13251-7025	Rod-Assy-Connecting
92033	92033-7018	Ring-Snap
92151	92151-7017	Bolt,6x35

AIR-FILTER/MUFFLER

11011	11011-7065	Case-Air Filter
11013	11013-7049	Element-Air Filter
11060	11060-7016	Gasket,Muffler
11061	11061-7086	Gasket,Carburetor/Pipe-Intake
16060	16060-7035	Pipe-Intake
42036	42036-7017	Sleeve,Breather
92009	92009-2303	Screw
92015	92015-1367	Nut
92171	92171-7007	Clamp
92173	92173-7003	Clamp
92173a	92173-7007	Clamp
92192	92192-7146	Tube,12.6x18.6x118
92192a	92192-7165	Tube
92210	92210-7027	Nut,M8
461	461da0800	Washer-Spring,8mm

LUBRICATION-EQUIPMENT

13272	13272-7011	Plate,Rotor
14075	14075-7013	Cap-Assy,Oil Gauge
16154	16154-7010	Rotor-Pump,Outer
16154a	16154-7011	Rotor-Pump,Inner
49065	49065-7006	Filter-Oil
49065a	49065-7007	Filter-Oil
49116	49116-7001	Valve-Assy
59071	59071-7008	Joint
59231	59231-7016	Filler
92055	92055-7002	Ring-O,6mm
92066	92066-7007	Plug
92066a	92066-7028	Plug
92140	92140-7003	Ball
92145	92145-7002	Spring
92153	92153-7008	Bolt
92153a	92153-7043	Bolt,6x12
92210	92210-7012	Nut,M22
555	555a0420	Pin-Spring,4x20
670	670d2016	O Ring,16mm

ELECTRIC-EQUIPMENT

13272	13272-7012	Plate
21066	21066-7017	Regulator-Voltage
21171	21171-7047	Coil-Assy-Ignition
21193	21193-7038	Flywheel-Assy
26011	26011-7025	Wire-Lead,L=95
26030	26030-7008	Harness
26031	26031-7040	Harness
26031a	26031-7041	HarnesS
59031	59031-7017	Coil-Charging
92009	92009-2303	Screw
92009a	92009-2308	Screw
92066	92066-7026	Plug
92070	92070-7004	Plug-Spark, Bpr4es(Ngk), Solid
92072	92072-7003	Band
92154	92154-7003	Bolt,12x30
92171	92171-7008	Clamp
92172	92172-7018	Screw,5x20
92200	92200-7002	Washer
130	130aa0620	Bolt-Flanged,6x20
510	510a5100	Key-Woodruff

COOLING-EQUIPMENT

13070	13070-7019	Guide,Cooling Air
13272	13272-7006	Plate,Fan
14037	14037-7008-9h	Screen
23062	23062-7022	Bracket-Comp
49089	49089-7079	Shroud-Engine
49089a	49089-7080	Shroud-Engine
59041	59041-7014	Fan
59066	59066-7052	Housing-Fan
92009	92009-2303	Screw
92026	92026-7007	Spacer
92151	92151-7012	Bolt,6x12
92153	92153-7007	Bolt
92153a	92153-7043	Bolt,6x12

Downloaded from www.Manualslib.com manuals search engine

https://truckmanualshub.com/

TRACTOR - - MODEL NUMBER (289580)

KAWASAKI ENGINE - MODEL NUMBER FR691V, TYPE NUMBER AS06

CARBURETOR

11061	11061-7009	Gasket,Chamber
11061a	11061-7010	Gasket,Screw
11061b	11061-7087	Gasket,Insulator
11061c	11061-7088	Gasket,Insulator/Manifold
11061d	11061-7093	Gasket,Manifold
13107	13107-7018	Shaft
15004	15004-7063	Carburetor-Assy
16014	16014-7010	Screw-Pilot Air
16020	16020-7003	Chamber-Float
16025	16025-7017	Valve-Throttle
16030	16030-7003	Valve-Float
16031	16031-7002	Float
16041	16041-7050	Shaft-Carburetor,Choke
16041a	16041-7051	Shaft-Carburetor,Throttle
16073	16073-7013	Insulator
16186	16186-7006	Valve-Assy-Choke
21188	21188-7002	Solenoid
39074	39074-7001	Lever-Assy-Throttle
49121	49121-7018	Nozzle-Main
59076	59076-7019	Manifold-Intake
92009	92009-2083	Screw
92009a	92009-2349	Screw
92009b	92009-2402	Screw
92063	92063-7141	Jet-Main,#122,3280ft
92063a	92063-7142	Jet-Main,#124
92063b	92063-7149	Jet-Main,#120,6560ft
92081	92081-2234	Spring
92093	92093-2100	Seal
92093a	92093-7003	Seal
92145	92145-2122	Spring
130	130aa0630	Bolt-Flanged,6x30
172	172ba06115	Bolt-Stud,6x115

CONTROL-EQUIPMENT

13107	13107-7047	Shaft,Governor
13271	13271-7038	Plate
16171	16171-7022	Link
39129	39129-7028	Spring-Governor
49103	49103-7014	Arm-Governor
49103a	49103-7015	Arm-Governor
49113	49113-7059	Panel-Comp-Control
92145	92145-7057	Spring
92145a	92145-7058	Spring
92151	92151-7014	Bolt,5x30
92153	92153-0009	Bolt,6x12
92153a	92153-7001	Bolt,Socket,5x16
92153b	92153-7033	Bolt,6x35
92153c	92153-7043	Bolt,6x12
92170	92170-7001	Clamp
214	214aa0408	Screw-Pan+-,4x8
311	311aa0600	Nut-Hex,6mm
312	312aa0500	Nut-Hex,5mm
411	411aa0600	Washer-Plain,6mm

VALVE/CAMSHAFT

11055	11055-7009	Bracket
12004	12004-7008	Valve-Intake
12005	12005-7009	Valve-Exhaust
12009	12009-7001	Retainer-Valve Spring
12011	12011-2056	Collet
12016	12016-2066	Arm-Rocker
12032	12032-7001	Tappet
13070	13070-7017	Guide,Governor
13116	13116-7007	Rod-Push
13271	13271-7007	Plate
13271a	13271-7021	Plate,Governor
42036	42036-7010	Sleeve
49078	49078-7002	Spring-Engine Valve,In
49118	49118-7022	Camshaft-Comp
92033	92033-7001	Ring-Snap
92140	92140-7005	Ball
92145	92145-7001	Spring
92152	92152-7020	Collar
92153	92153-7100	Bolt,6x29.5
92200	92200-2151	Washer,8.1x18x0.5
92200a	92200-7009	Washer,16x42x0.91
92200b	92200-7048	Washer,16.3x30x2.28
130	130aa0814	Bolt-Flanged,8x14
312	312aa0600	Nut-Hex,6mm

FUEL-TANK/FUEL-VALVE

42036	42036-7015	Sleeve
49019	49019-7005	Filter-Fuel
49040	49040-7008	Pump-Fuel
92009	92009-2303	Screw
92170	92170-2009	Clamp
92171	92171-7008	Clamp
92192	92192-7148	Tube,6.4x12.7x150
92192a	92192-7182	Tube,6.35x12.7x315
92192b	92192-7188	Tube,6.35x12.7x390

STARTER

16146	16146-7027	Cover-Assy
16146a	16146-7030	Cover-Assy
21080	21080-7006	Armature
21163	21163-7034	Starter-Electric
27012	27012-7008	Hook
32085	32085-7005	Stopper
59051	59051-7034	Gear-Spur
92093	92093-7007	Seal
92145	92145-7060	Spring
92154	92154-7001	Bolt
92210	92210-7017	Nut
92210a	92210-7036	Nut
130	130aa0840	Bolt-Flanged,8x40

LABEL

56033	56033-7001	Label-Manual
56070	56070-7001	Label-Warning
56080	56080-7076	Label-Brand

Downloaded from www.Manualslib.com manuals search engine

https://truckmanualshub.com/

TRACTOR - MODEL NO. (289580), PRODUCT NO. LGTH2454

TUFFTORQ TRANSAXLE MODEL NUMBER K46AW

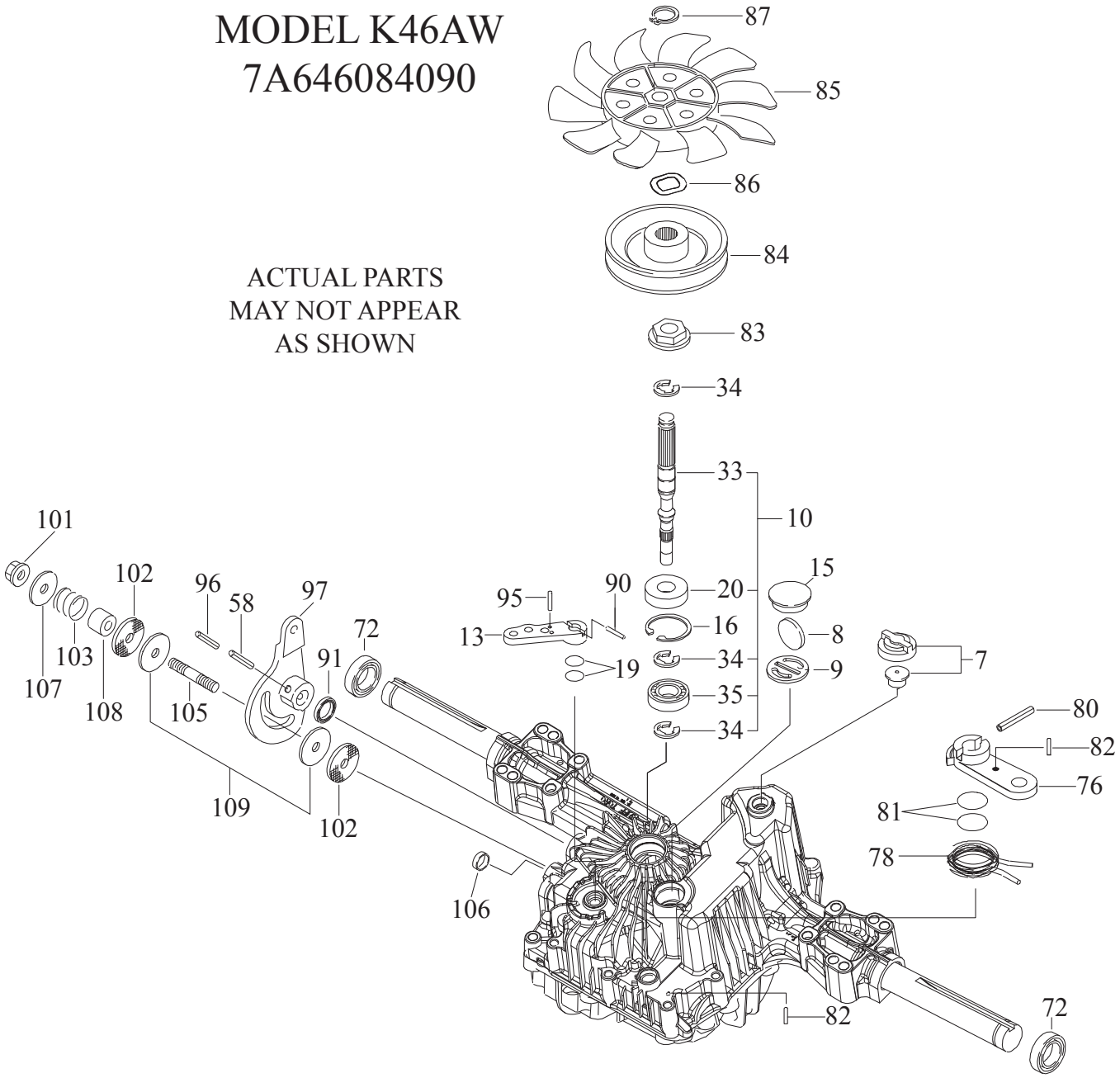

Downloaded from www.Manualslib.com manuals search engine

https://truckmanualshub.com/

KEY NO.	PART NO.	DESCRIPTION
7	414395	VENT VALVE 15
8	414396	MAGNET
9	414397	MAGNET HOLDER
10	415923	PUMP SHAFT/BEARING KIT
13	414398	BYPASS LEVER
15	414399	SEALING CAP 30
16	414400	SNAP RING C 35
19	414401	O-RING 1A P10A
20	414402	SEAL TC 153507
33	414403	PUMP SHAFT (STANDARD
34	414404	E-RING 15
35	414405	BEARING 6202C3
58	414406	ROLL PIN 6 * 40
72	414407	SEAL 19 * 32 * 8
76	414408	BRAKE LEVER
78	414409	BRAKE RETURN SPRING
80	414410	SPRING PIN 5 * 32
81	414411	0-RING 1A P12
82	414412	SPRING PIN 4 * 16
83	414413	SPINE COLLAR
84	414414	PULLEY L
85	414415	FAN, BLACK
86	414416	WAVE WASHER
87	414417	SNAP RING
90	414418	SPRING PIN 3.0A * 20
91	414419	OIL SEAL 16 * 22 * 03
95	415850	SPRING PIN 3.0A * 16
96	414420	ROLL PIN 3.5 * 40
97	414421	CONTROL LEVER
101	414216	LOCK NUT 10
102	414423	WASHER 10 * 40 * 4
103	414424	SPRING
105	414425	STUD 10 * 60
106	414426	SEALING CAP 18
107	414427	WASHER 10 * 36 * 2.8
108	414428	COLLAR 10 * 20 * 17
109	414429	FRICTION PLATE KIT

NOTE: All component dimensions given in U.S. inches
1 inch = 25.4 mm

Downloaded from www.Manualslib.com manuals search engine

https://truckmanualshub.com/

Husqvarna WARRANTY STATEMENT

SECTION 1: LIMITED WARRANTY

Husqvarna Forest & Garden Company ("Husqvarna") warrants Husqvarna product to the original purchaser to be free from defects in material and workmanship from the date of purchase for the "Warranty Period" of the product as set forth below:
Lifetime Warranty (Parts and Labor): All tiller tines and trimmer shafts against breakage. Proof of purchase required.
Lifetime Warranty ("PARTS ONLY" after initial warranty expiration): Ignition coils and modules on handheld product. Proof of purchase required.
WARRANTY SCHEDULE FOR TURF CARE Equipment - Zero Turn Riders
(New warranty applies to units sold after August 1, 2005. Also applies to units factory-equipped with R.O.P.S.
EZ Zero Turn Riders: 3 year consumer warranty or 600 hours of use (when used solely at the owner's residence.)
EZ & MZ Zero Turn Riders: 1 year commercial warranty or 600 hours of use.
iZ, LZ & BZ Zero Turn Riders: 5 year consumer warranty or 1,500 hours of use.
iZ, LZ & BZ Zero Turn Riders: 5 year commercial warranty or 1,500 hours of use.
3 Year or 1,500 Hour Commercial Use Warranty: spindles on zero turn riders, hydraulic pumps and wheel motors.
Warranty Schedule for Turf Care Walk Behind Units - W, WG & WH Zero Turn Riders - 3 year consumer and commercial warranty. New warranty applies to units sold after August 1, 2005. Also applies to units factory-equipped with R.O.P.S.
2 Year COMMERCIAL and CONSUMER Warranty: all Husqvarna ground-engaging commercial equipment.
WARRANTY SCHEDULE FOR CONSUMER TURF CARE EQUIPMENT:
2 Year Consumer Warranty: Automatic mower, all Residential Zero Turn Riders, all lawn, yard and garden tractors, all noncommercial walk behind mowers, tillers, snow blowers, electrical products and power-assist collection systems for noncommercial, nonprofessional, noninstitutional or nonincome producing use, except as herein stated. All consumer product use must have been limited to the owner's residence.

WARRANTY SCHEDULE FOR CONSUMER FOREST & GARDEN EQUIPMENT:
2 Year Consumer Warranty: all consumer chain saws, trimmers, brushcutters, clearing saws, handheld blowers, backpack blowers, hedge trimmers, and electrical products for noncommercial, nonprofessional, noninstitutional or nonincome producing use, except as herein stated. All consumer product use must have been limited to the owner's residence.
2 Year or 2,000 Hour Powertrain & 1 Year or 1,000 Hour Body Warranty: Husqvarna Utility Vehicles.
1 Year Warranty: Power cutters, stump grinder, pole pruners and pole saws for non-commercial, non-professional, noninstitutional, non-municipality or non-income producing use. All 300 series trimmers, brushcutters, clearing saws, hovering trimmers, stick edgers, backpack blowers, hand held blowers, hedge trimmers, power-assist collection systems for commercial, institutional, professional or income producing purposes or use.
1 Year Conditional Component Warranty: Chain saw crankshafts for commercial/professional use (parts and labor).Saw must be operated with Husqvarna XP 2 cycle oil.
90 Day Commercial Warranty: Automatic mower, chain saws, 100 series trimmers, power cutters, stump grinders, pole saws, pole pruners, snow throwers, model series 580 & 600 walk-behind mowers, or any Husqvarna product used for commercial, institutional, professional, municipality or income producing purposes or use except as otherwise provided herein.
Batteries: 1 year prorated limited warranty with 100% replacement during the first 6 months.
Rental Warranty: 90 days on all applicable professional equipment reference warranty time period charts located in the back of the Retailer Warranty Policy & Procedure Manual.
Husqvarna Safety Apparel carries a 90-day warranty from the date of the customer's original purchase for defects in material and workmanship. Normal wear, tear or abuse is not covered under warranty. Product must be returned to Charlotte with a warranty claim form. All care and maintenance instructions must be followed as stated by the manufacturer on the care label. The fit of the protective apparel/boot is not covered under warranty.
30 Day Warranty: Replacement parts, accessories including bars and chains, tools and display items. Emission control system components necessary to comply with CARB-TIER II and EPA regulations, except for those components which are part of engine systems manufactured by third part engine manufacturers for which the purchaser has received a separate warranty with product at time of purchase.

SECTION 2: HUSQVARNA'S OBLIGATIONS UNDER THE WARRANTY

Husqvarna will repair or replace defective components without charge for parts or labor if a component fails because of a defect in material or workmanship during the warranty period.

SECTION 3: ITEMS NOT COVERED BY THIS WARRANTY

The following items are not covered by this warranty:
(1) Normal customer maintenance items which become worn through normal regular use, including, but not limited to, belts, blades, blade adapters, bulbs, clutches, clutch drums, filters, guide bars, lubricants, rewind springs, saw chain, spark plugs, starter ropes and tiller tines;
(2) Natural discoloration of material due to ultraviolet light;
(3) Engine and drive systems not manufactured by Husqvarna; these items are covered by the respective manufacturer's warranty as provided in writing with the product information supplied at the time of purchase; all claims must be sent to the appropriate manufacturer;
(4) Lawn and garden attachments are covered by a third party which gives a warranty, all claims for warranty should be sent to the manufacturer,
(5) Commercial or consumer mowing decks with sand abrasion damage.
(6) Emission Control System components necessary to comply with CARB-TIER II and EPA regulations which are manufactured by third party engine manufacturer.

SECTION 4: EXCEPTIONS AND LIMITATIONS

This warranty shall be inapplicable to defects resulting from the following:
(1) Accident, abuse, misuse, negligence and neglect, including stale fuel, dirt, abrasives, moisture, rust, corrosion, or any adverse reaction due to incorrect storage or use habits;
(2) Failure to operate or maintain the unit in accordance with the Owner's/Operator's manual or instruction sheet furnished by Husqvarna;
(3) Alterations or modifications that change the intended use of the product or affects the product's performance, operation, safety, or durability, or causes the product to fail to comply with any applicable laws; or:
(4) Additional damage to parts or components due to continued use occurring after any of the above.

REPAIR OR REPLACEMENT AS PROVIDED UNDER THIS WARRANTY IS THE EXCLUSIVE REMEDY OF THE PURCHASER. HUSQVARNA SHALL NOT BE LIABLE FOR ANY INCIDENTAL OR CONSEQUENTIAL DAMAGES FOR BREACH OF ANY EXPRESS OR IMPLIED WARRANTY ON THESE PRODUCTS EXCEPT TO THE EXTENT PROHIBITED BY APPLICABLE LAW. ANY IMPLIED WARRANTY OF MERCHANTABILITY OR FITNESS FOR A PARTICULAR PURPOSE ON THESE PRODUCTS IS LIMITED IN DURATION TO THE WARRANTY PERIOD AS DEFINED IN THE LIMITED WARRANTY STATEMENT. HUSQVARNA RESERVES THE RIGHT TO CHANGE OR IMPROVE THE DESIGN OF THE PRODUCT WITHOUT NOTICE, AND DOES NO T ASSUME OBLIGATION TO UPDATE PREVIOUSLY MANUFACTURED PRODUCTS.

Some states do not allow the exclusion of incidental or consequential damages, or limitations on how long an implied warranty lasts, so the above limitations or exclusions may not apply to you. This warranty gives you specific legal rights, and you may also have other rights which vary from state to state.

SECTION 5: CUSTOMER RESPONSIBILITIES

The product must exhibit reasonable care, maintenance, operation, storage and general upkeep as written in the maintenance section of the Owner's/Operator's manual. Should an operational problem or failure occur, the product should not be used, but delivered as is to an authorized Husqvarna retailer for evaluation. Proof of purchase, as explained in section 6, rests solely with the customer.

SECTION 6: PROCEDURE TO OBTAIN WARRANTY CONSIDERATION

It is the Owner's and Retailer's responsibility to make certain that the Warranty Registration Card is properly filled out and mailed to Husqvarna Forest & Garden Company. This card should be mailed within ten (10) days from the date of purchase in order to confirm the warranty and to facilitate post-sale service.

Proof of purchase must be presented to the authorized Husqvarna retailer in order to obtain warranty service. This proof must include date purchased, model number, serial number, and complete name and address of the selling retailer.

To obtain the benefit of this warranty, the product believed to be defective must be delivered to an authorized Husqvarna retailer in a timely manner, no later than thirty (30) days from date of the operational problem or failure. The product must be delivered at the owner's expense. Downtime, pick-up and delivery charges are not covered by this warranty. An authorized Husqvarna retailer can be normally located through the "Yellow Pages" of the local telephone directory or by calling 1-800-HUSKY62 for a retailer in your area.

HUSQVARNA
7349 Statesville Road
Charlotte, NC 28269 2008

Husqvarna

Printed in the U.S.A.

Downloaded from www.Manualslib.com manuals search engine