https://truckmanualshub.com/

steyr-traktoren.com

The new STEYR TERRUS CVT with up to 300hp

STAY CONNECTED
STAY **AHEAD**

Your partner to rely on.

STEYR TRAKTOREN

https://truckmanualshub.com/

MADE IN **AUSTRIA**

Our engineers have gone to extraordinary lengths to build a tractor that really does have what it takes to deliver stupendous performance.

The outcome: the TERRUS CVT, the new flagship of STEYR!

There is a choice of three models, equipped with ultra-efficient and reliable engines, one rated for 250hp, and the others for 271 and 300hp. With its ideal power-to-weight ratio, the TERRUS CVT is predestined for rapid transport duties as well as for heavy-duty field work. This, our most powerful tractor, also has other strengths – in particular exceptional levels of comfort: a suspended front axle combined with a luxurious and remarkably quiet cab make work a relaxed and fatigue-free activity. Also on board: the very latest technologies, such as S-TECH precision farming, S-GUIDE automated steering system, S-TURN II automated turning, ISOBUS III and Easy-Tronic II headland management system, as well as S-FLEET telematic solutions.

» **Straight ahead. Made in Austria, to make the difference.**

https://truckmanualshub.com/

10 – 11
Engine

12 – 13
Transmission

14 – 15
Front Linkage Area

16 – 17
Rear Linkage Area

20 – 25
Cab

28 – 29
Driveline

30 – 31
Safety

34 – 39
S-TECH and S-FLEET

42 – 43
About STEYR

44 – 45
Sustainability

46 – 47
STEYR Service

48 – 49
Maintenance

https://truckmanualshub.com/

TERRUS CVT CONNECTED IN EVERY ASPECT

Low noise level of 66dB(A) for stress-free operation and for using the telephone.

Up to 24 LED-worklights for perfect 360° illumination.

Ergonomic operation using the Multicontroller III armrest.

Dual-Motion driver seat, cab suspension and front axle suspension for more comfort.

Powerful, efficient and ecological: the 6-cylinder engines from 250 up to 300hp fulfill the Stage V emission standard.

S-TRONIC has been further advanced and offers customizable control features.

S-Control™ CVT: continuously variable transmission with ultimate mechanical efficiency rating.

50kph achieved at a fuel-efficient 1,550rpm.

https://truckmanualshub.com/

Active hold control for stopping on a steep slope without a brake.

Headland management Easy-Tronic II for the automation of work operations, dependent on time and distance covered.

Four rear and two front PTO speeds with Power mode or with the fuel-efficient engine speed of the ECO mode.

Maximum rear lift capacity of up to 11,058kg and 6,016kg at the front.

Patented trailer brake system S-Brake represents a major advance in tractor safety for the driver.

QuickTurn II full wheel lock at minimum steering movement.

Double tyres at front and rear and the latest IF and VF tyre technology is available for your TERRUS CVT.

The TERRUS CVT supports ISOBUS II and ISOBUS III.

S-TECH precision farming: fully automatic turning with S-GUIDE and S-TURN II.

S-FLEET lets you remotely monitor and manage your farm, fleet and data.

https://truckmanualshub.com/

TERRUS CVT
ALL INCLUSIVE

Well equipped

Your TERRUS CVT is available in three equipment configurations for convenience. Custom, for the a la carte approach, and Evolution and Excellence that configure the best TERRUS CVT options conveniently. You can quickly select the features that matter to you.
The equipment packages can be changed by STEYR without prior notification. Please contact your local dealer for the latest configuration.

https://truckmanualshub.com/

Evolution

Evolution in comfort and performance for the customers

The front linkage is a standard feature with Evolution and allows you to quickly add and remove ballast and, for further productivity, add an additional mounted implement.

FACTS

- Electrohydraulic remotes and powerful hydraulic pump (165l/min or 220l/min optional)
- 4 speed PTO
- Electronic park lock is standard
- STEYR Deluxe or Active Luxury cab options with air conditioning, passenger seat and suspension
- Front axle suspension is optional
- Intuitive Infomat 1200 touchscreen monitor
- Advanced functionality joystick is standard
- Optional Easy Tronic II (advanced headland management) and STEYR S-GUIDE autoguidance options
- ISOBUS Class II or III optional

Excellence

High-end performance and superior operator comfort features

The STEYR cab suspension is standard with Excellence and delivers a premium comfort experience.
Fatigue is reduced during long days in the field and on the road.

FACTS

- Powerful hydraulic pump (165l/min or 220l/min optional)
- 4 speed PTO
- Electronic park lock is standard
- STEYR Deluxe or Active Luxury cab options with air conditioning, passenger seat and suspension
- Premium speakers are standard
- Front axle suspension is optional
- Intuitive Infomat 1200 touchscreen monitor
- Advanced functionality joystick is standard
- Optional Easy Tronic II (advanced headland management) and STEYR S-GUIDE Autoguidance options
- 5 electrohydraulic rear remote valves are standard
- Power Beyond is standard
- ISOBUS Class II or III optional

https://truckmanualshub.com/

https://truckmanualshub.com/

THE POWER TO PROPEL YOUR OPERATION **AHEAD**

FPT HI-eSCR2 engine and S-Control™ CVT: a combination of perfect partners to power implements front and rear.

» **Gigantic power delivered – the new TERRUS CVT.**

https://truckmanualshub.com/

GREAT POWER, LOW FUEL CONSUMPTION

Turbocharged six cylinder power

Power used most intelligently. The engines in the TERRUS CVT models are the best in their class. Here, profitability, productivity, environmental preservation and ultra-modern energy management come together in perfect symbiosis. By virtue of the unique HI-eSCR2 exhaust gas after-treatment system, fuel consumption is optimised and power and engine response are improved. Optimum fuel injection time without exhaust gas recirculation means neither the engine nor the cooling system are overloaded. This makes maintenance intervals of 750 hours a reality. The system also does not require a particle filter, and this reduces maintenance costs.

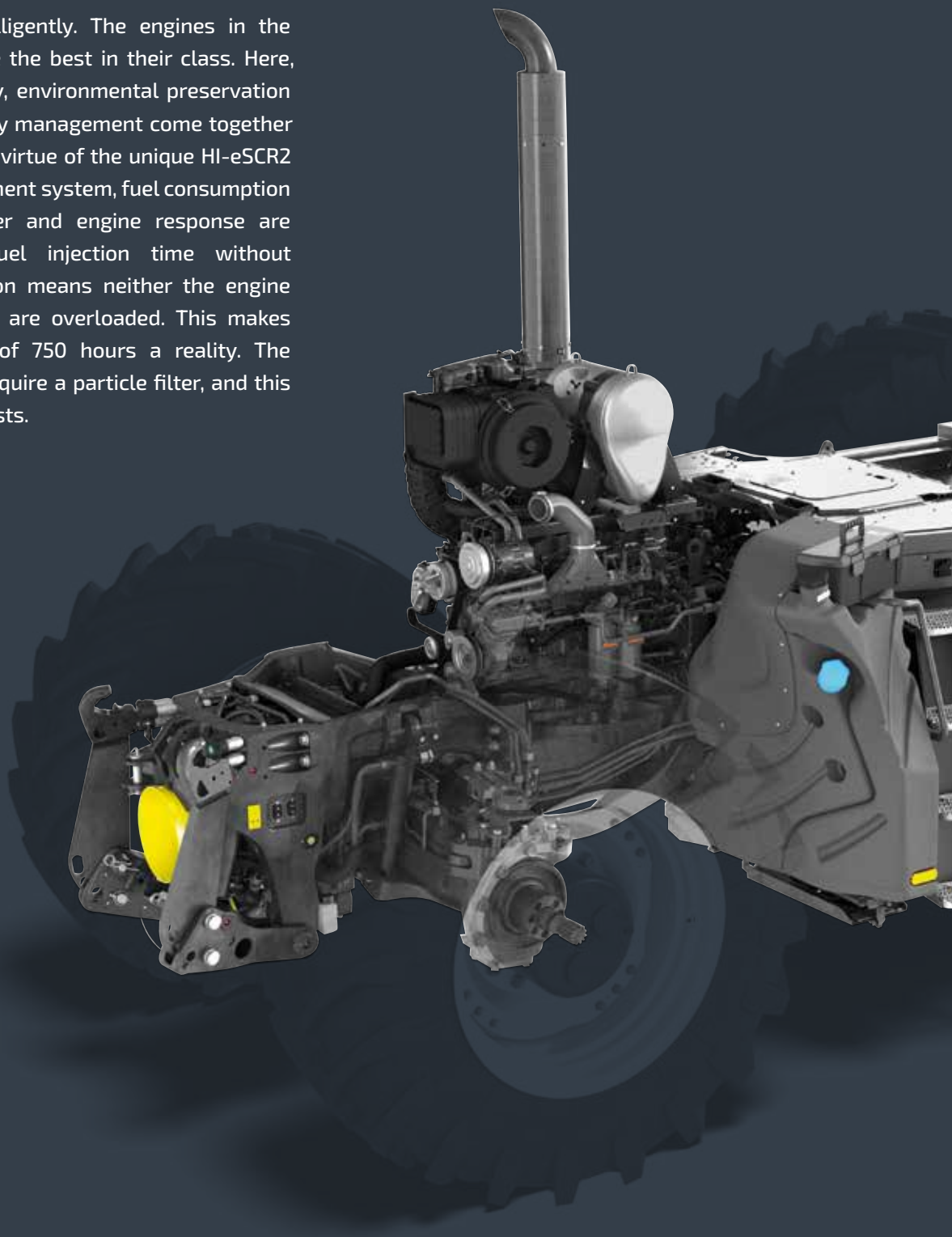

https://truckmanualshub.com/

ECO DRIVE

The dual hand throttle allows the individual adjustment of the minimum and maximum engine speed, adjusting the vehicle characteristics according to the required task and minimizing fuel consumption.

1 POWER MODE – PULLING AND TRANSPORT

Full potential of the engine is available.

2 ECO MODE – PULLING AND TRANSPORT ECONOMY

With the right hand throttle lever you can limit the maximum engine speed to save fuel.

3 PTO MODE

Set the desired engine (PTO) speed with the left hand throttle lever. The right hand throttle lever determines the engine speed down to which the engine can be drooped, before the transmission reduces the ground speed.

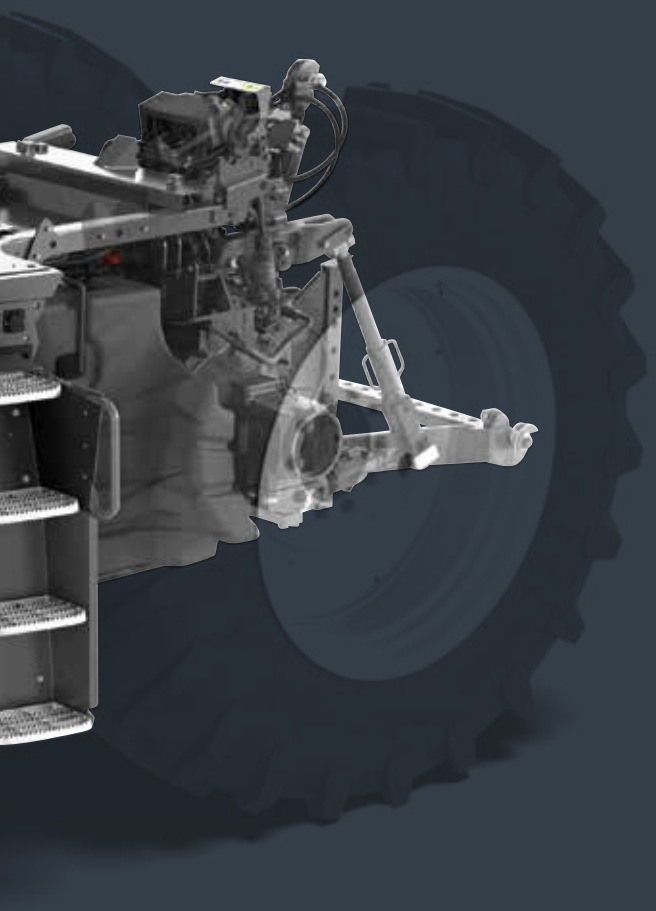

FACTS

- 6-cylinder engines with turbocharger and intercooler
- 6.7 litre cubic capacity
- Rated power output: 250-300hp
  Max. power output: 273-313hp
- High maximum torque with up to 1,282Nm
- HI-eSCR2 technology from FPT fullfils Stage V
- S-TRONIC engine and transmission management
- Engine is fully compatible with hydro-treated vegetable oil, or HVO (bio-synthetic diesel)
- Up to 40% torque increase
- Extended engine service intervals (750 hours)
- Reversible fan
- Engine exhaust brake
- Up to 630-litre fuel tank to help maximise the working day

https://truckmanualshub.com/

TRUST IS GOOD. **S-TRONIC** IS BETTER

S-Control™ CVT transmission

Maximum torque with minimum fuel consumption, electronic control that permits even faster changes in direction and active stationary control to stop safely on a steep gradient: the continuously variable S-Control™ CVT transmission is a leader in comfort and efficiency.

FACTS

- Stepless from 0 to 50kph
- 40 or 50kph at reduced engine revs
- Four points of 100% mechanical efficiency
- Active hold control
- DKT – Double clutch technology
- Kick-down functionality
- S-TRONIC engine and transmission management
- CVT custom dynamics
  - Acceleration / deceleration
  - Shuttling speed
  - Drive pedal behavior
  - Engine torque response

https://truckmanualshub.com/

S-TRONIC custom settings

Individually set-up your S-Control™ CVT transmission settings according to your operation.

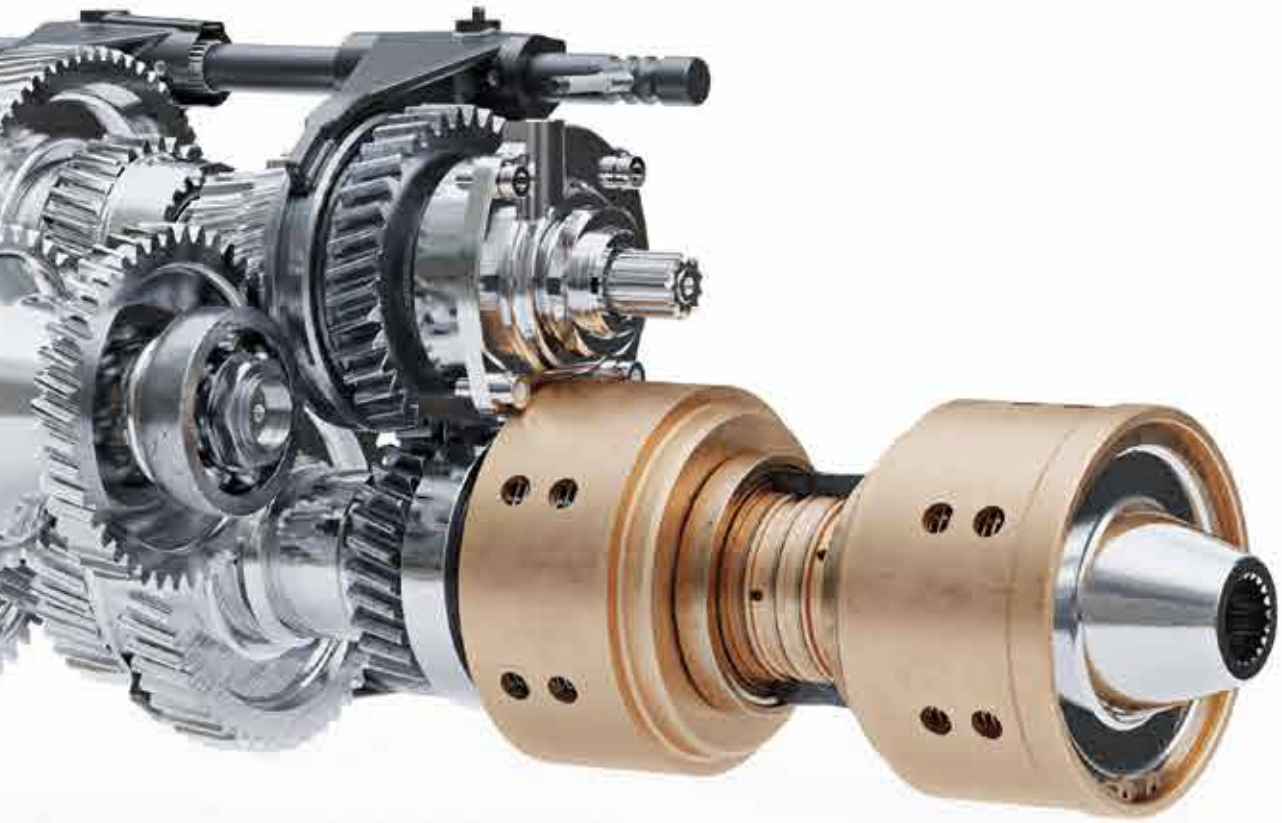

https://truckmanualshub.com/

LEADING FROM THE FRONT. **AHEAD** IN HITCH/PTO

Fully integrated

The STEYR front linkage has a lift capacity of 6,016kg for the biggest of front mounted implements. The 2-speed front PTO option offers 1,000 and 1,000E rpm speeds. Those are achieved at an engine rpm of 1,886, the optimum range for power, and at 1,585rpm for best efficiency.

Attaching an implement is made safer and easier via easy-to-access remote hitch switches, and the optional camera provides an in cab view of the implement at work.

FRONT LINKAGE

- 6,016kg maximum lift capacity
- Seven-pin lighting and 40-A plug sockets fitted standard
- Remote operating switches for hitch operation to aid safe hitching

Easy to reach
External actuation of front hitch, front PTO and front control unit.

https://truckmanualshub.com/

FRONT PTO

- 2-speed PTO perfectly integrated
- 1,000/1,000E rpm front PTO
- Front PTO-management
- Progressive soft start
- Electrohydraulic engagement under load

https://truckmanualshub.com/

HEAVY TASKS? MAKE THEM **LIGHT WORK**

Always in good hands

The loadsensing hydraulic system of the TERRUS CVT is based on an axial piston variable displacement pump with an oil delivery rate of up to 220l/min. Up to 8 independent valves can be supplied with oil at the same time. The delivery rate and duration can be set individually for each electrical remote valve. This guarantees an excellent response behavior for all connected implements.
Top links are by their nature heavy – connecting implements is easier with an improved top link fixing for better stability while a position indicator allows the operator to check from the seat. The rear PTO is available with two or four speeds.

REAR HITCH

- Up to 11,058kg lifting capacity
- Improved top link fixing for better stability and position indicator
- CCLS hydraulic system with up to 220l/min pump capacity
- Electronic hitch regulation (EHR)
- Ride Control – dynamic vibration damping
- Up to eight electrohydraulical remote valves (five on the rear, three centrally mounted)
- Power-Beyond connection
- Easy setup through Infomat 1200 monitor
- Free configurable remote valve levers

Easy setup
Shortcut keys bring you directly to the settings menu to configure your remote valves.

Easy control
Configurable control switches with changing colours allow individual assignment of the rear remote valves.

https://truckmanualshub.com/

REAR PTO

- Electrohydraulic engagement under load
- PTO-Management
- Progressive soft start
- External controls on both rear fenders
- PTO-speeds: 540/540E/1,000/1,000E

https://truckmanualshub.com/

https://truckmanualshub.com/

CONTROL AND COMFORT DAY AND NIGHT KEEP YOU **AHEAD**

Work in premium-class comfort, with innovative controls that mean you can operate your TERRUS CVT to exactly suit you and your operation.

» **Avantgarde design, to suit your work – the new TERRUS CVT.**

https://truckmanualshub.com/

NO OTHER CAB OFFERS SUCH **COMFORT**

Premium comfort

The slimline bonnet provides optimum visibility over the front working area. Also at the rear, for effortless attachment of implements, the TERRUS CVT provides clear visibility of the coupling points. With the large, electrically adjustable and heated telescopic mirrors with wide-angle insert, you can even keep an eye on wide attachments.

FACTS

- 4-pillar-cab
- Low noise level of just 66dB(A)
- Sun roller blind on front and rear windscreen
- Up to 24 powerful LED worklights
- Front and rear mounted cameras for improved visibility when working with implements

The new pressurized HVAC climate control system features more vents and louvers to increase air flow around the operator. It can also be controlled directly via the encoder or the configurable buttons.

https://truckmanualshub.com/

Really good looking. At day and night

Thanks to the four-pillar panorama cab with its large windows, one-piece front windscreen and high-visibility roof design, TERRUS CVT operators are assured of perfect and unrestricted all-round vision. In addition front and rear cameras as well as a wireless camera are available. An LED lighting package means superlative visibility is also assured after dark. Customers can choose from four, eight or ten LEDs in the tractor's hood, front cab posts and rear fenders, plus 10 or 14 LEDs in the cab roof. With a lighting power of 2,000 or 2,500 lumens per LED, night turns into day to ensure accuracy, efficiency and safety.

STEYR has integrated useful functions into the key fob. Apart from locking and unlocking the cab with the push of a button, the new key fob also protects against unauthorized access and theft, since the tractor won't start without a recognized key.

https://truckmanualshub.com/

The perfect working place

The TERRUS CVT cab offers a working area you can rely upon fully in all situations: a low noise level of only 66dB(A), ergonomic seating and steering wheel adjustments, finely adjustable air conditioning and our cab suspension, front axle suspension and Dual-Motion driver seat assure maximum comfort.

FACTS

- Low noise level of just 66dB(A)
- Cab suspension
- Air condition or automatic climate control
- DAB-Radio with premium-loudspeaker
- Handsfree microphone
- Tablet and mobile mount with power sockets
- Plenty of storage compartements

https://truckmanualshub.com/

DELUXE

- Dual-Motion driver seat with dynamic damping system
- Seat heating
- Swivel-mounted headrest
- Active carbon inserts to control humidity
- Leather steering wheel
- Carpet

ACTIVE LUXURY

Difference compared to Deluxe

- Maximo-Evolution-leather driver seat
- Seat cooling
- Active-suspension with automatic adjustment
- Leather co-driver seat

https://truckmanualshub.com/

OPERATE YOUR TERRUS CVT **EXACTLY** HOW YOU WANT TO

Well served

You and your employees always have a lot to do. That's why we've been thinking about how we can make your everyday work life even easier. The result is the innovative Multicontroller III armrest: it enables a fast reset of preferences when changing drivers or changing jobs and places. Everyone should benefit from this innovation: the armrest position can be adjusted in four directions to suit any driver.

https://truckmanualshub.com/

Quickly adjustable
The Infomat 1200 monitor pivots through 52 degrees so you can have it just where you want it.

Free configurable
The STEYR Multicontroller III handle features reconfigurable buttons that can be assigned via the Infomat 1200 monitor. This allows you to control more of the TERRUS CVT and ISOBUS functions ergonomically in one hand.

FACTS

- Infomat 1200: the integrated touchscreen colour monitor
- New A-post color performance monitor
- Ergonomic operation with Multicontroller III
- Joystick and levers to control remote valves on front and rear
- Front and rear PTO switches
- ICP – Intuitive Control Panel
- ECO-Drive™ levers
- Hydraulic settings
- ISOBUS Aux-N

https://truckmanualshub.com/

https://truckmanualshub.com/

FROM FULL SPEED TO A FULL STOP: STAY **AHEAD**

With front axle suspension and an advanced trailer brake system, comfort and safety are always assured.

» **Ready for action, to perform at the best – the new TERRUS CVT.**

https://truckmanualshub.com/

SAFETY, SECURITY, COMFORT. AHEAD ON ANY TERRAIN

Front axle suspension

Ensures more comfort, better traction and safety.

https://truckmanualshub.com/

Wide trailer carriage
Makes it easier to connect up the universal shaft to the PTO stub shaft.

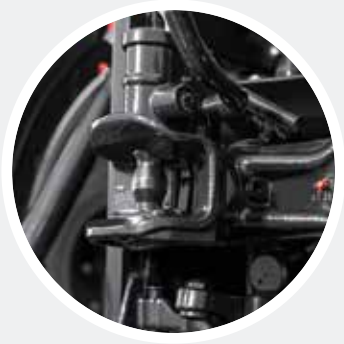

Automatic trailer drawbar
The towbar coupling is opened by remote control from the cab.

K80 ball-head coupling
Ideal for heavy-duty trailer operation.

Perfect traction

With an excellent power-to-weight ratio and a high maximum permissible weight, TERRUS CVT tractors are strong in the field and on the road. The perfect interaction of all components ensures a unique driving experience of a new generation.

FACTS

- Automatic 4WD- and differential lock management
- Front axle suspension
- Various trailer fixtures for different transport operations
- Tyre and rim combinations for every application

https://truckmanualshub.com/

THE **ULTIMATE** IN SAFETY WHEN STOPPING FROM SPEED

Perfect safe

The modern way of driving a tractor. The TERRUS CVT series offers the most complete braking system on the market with S-Brake trailer braking systems. All models are equipped with wet dual disc brakes (4 disc brakes on the rear axle). The more wear-resistant HD brake discs offer a longer service life, especially win heavy transport. The perfect interaction of all components ensures a unique driving experience of a new generation.

https://truckmanualshub.com/

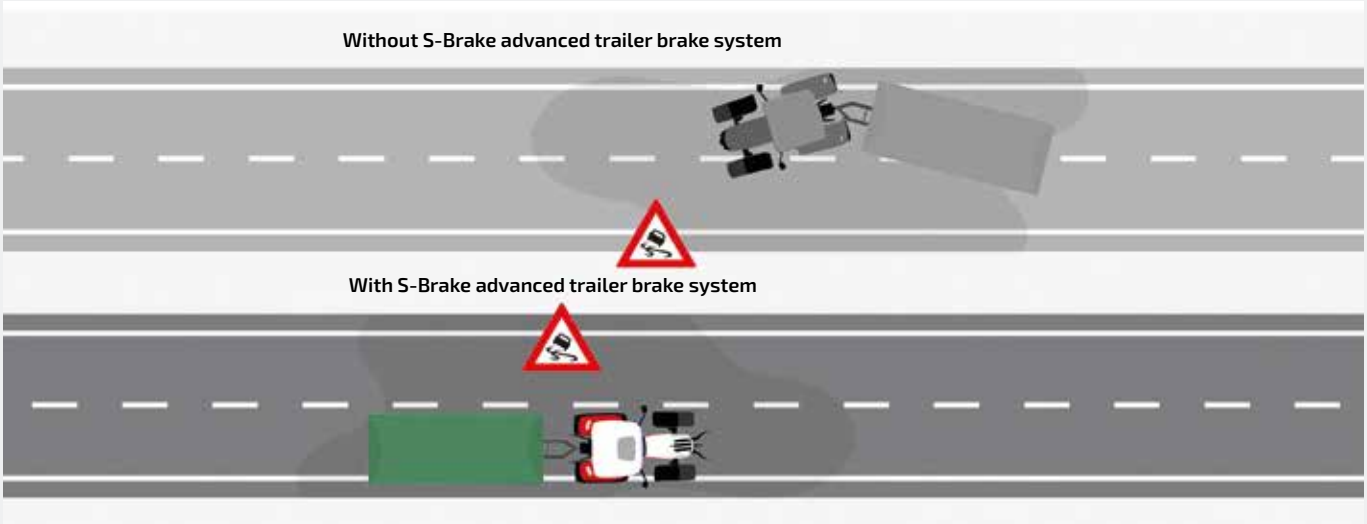

Patented trailer brake system

With S-Brake, the advanced trailer braking system, you remain confident even in difficult situations. The patented system actively recognizes the current driving situation and stabilizes the combination when braking. The tractor and trailer stay in line.

FACTS

- All-wheel and 4-wheel braking
- Electronic parking brake
- S-Brake trailer braking system
- CTIS – Central tyre inflation optional

https://truckmanualshub.com/

https://truckmanualshub.com/

PRECISION TECHNOLOGY TO KEEP YOUR BUSINESS AHEAD

S-TECH precision farming technology plus S-FLEET telematics and remote service support.

» **Advanced connectivity, to look forward – the new TERRUS CVT.**

https://truckmanualshub.com/

THE PRECISION YOU NEED TO KEEP AHEAD OF YOUR WORK

Work more efficiently with STEYR S-TECH

The right thing for professional farmers and agricultural businesses, because GPS, used in conjunction with the comprehensive coverage of the RTK+ network, provides precise positional navigation and steering. The system guarantees 100% network coverage and uses the revolutionary X-FILL technology to bridge signal losses lasting up to 20 minutes. That translates into field work with pass-to-pass accuracy variation of as little as 1.5 centimetres. That enables S-TECH to relieve driver workload while also reducing operating costs. Or to put it simply: S-TECH saves you time and money.

https://truckmanualshub.com/

You are always on the right track with STEYR

Track guidance, data management, integrated communication between implements and the tractor via ISOBUS and much more – the STEYR TERRUS CVT doesn't only work hard, it also works precisely. This considerably increases productivity and profitability.

S-TECH A1000 receiver

To increase uptime in challenging environments the receiver use GPS, Galileo, BeiDou and GLONASS.

FACTS

- Range of signal accuracies available (EGNOS, Range Point RTX, S-TECH 1, 2, 3, and S-TECH RTK+ signals)
- Optional high accuracy RTK+ signal with accuracy levels close to 1.5cm
- X-FILL bridges RTK signal gaps of up to 20 minutes
- Infomat 1200 monitor with touchscreen
- ISOBUS II and ISOBUS III compatible
- S-GUIDE is an integrated automated steering system
- S-TURN II automates turns at the end of a row

https://truckmanualshub.com/

TECHNOLOGY TO KEEP YOU **AHEAD** OF YOUR WORK

S-FLEET telematic solutions

S-FLEET lets you remotely monitor and manage your farm, fleet and data, allowing you to optimise your performance, productivity and flexibility. Efficiently visualise your equipment with little to no idle time. With all the information at your fingertips, you can successfully manage your operations anytime, anywhere!

Keep an eye on your farm
Crop and weather monitoring
Operation control in real time

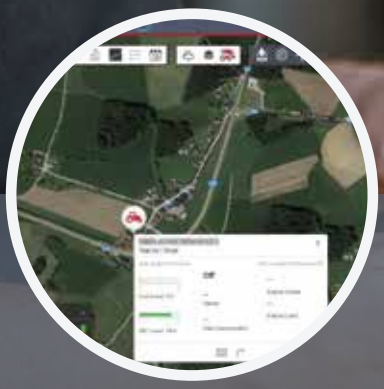

Keep an eye on your fleet
Machine tracking and monitoring
On-time notifications

Keep an eye on your data
Data sharing
Connect with 3rd party partners

https://truckmanualshub.com/

FACTS

- S-FLEET telematic solutions for maximum productivity
- User-friendly interface
- Time-saving management
- Data visualisation enhancing decision making
- Efficiently track your equipment's location and view machine parameters in real time
- mySTEYR is your destination for STEYR product support
- Solutions for mixed fleets
  - DataConnect
  - Agrirouter

S-FLEET

Available on the App Store

GET IT ON Google Play

Keep an eye on everything

Download the mySTEYR app and get access to S-FLEET.

mySTEYR TRAKTOREN

https://truckmanualshub.com/

AHEAD EVEN ON THE HEADLANDS

Turn well. All good

The Easy-Tronic II headland management system is designed to relieve the driver as much as possible when turning on the headland and doing many other control activities. The S-TURN II technology in combination with Easy-Tronic II ensures complete automation of headland work. Steering processes, the turning radius, speed and control of the implements are automated and optimized at the headland. This leads to greater efficiency and increased comfort.

EASY-TRONIC II AND S-TURN II

- Full automation of work sequences
- You can record and program while in operation or stationary
- Programming possible, dependent on time, distance and event initiation
- Calling up of sequences by Multicontroller III, Infomat 1200 monitor or on the ICP
- S-TURN II turns automatically at the end of a tramline
- ISOBUS Class II- and III-compatibility

https://truckmanualshub.com/

ISOBUS and TERRUS CVT

You can control ISOBUS Class II and III implements through the Infomat 1200 monitor on the TERRUS CVT – potentially saving the need for a second display in the cab. With ISOBUS Class III, the implement can control certain TERRUS CVT functions, such as forward speed and hydraulics for example, thereby maximizing productivity and ensuring a consistent workflow process during long seasonal days.

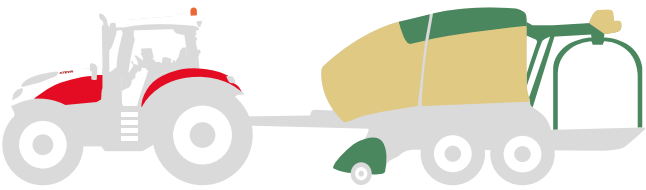

https://truckmanualshub.com/

https://truckmanualshub.com/

ALWAYS THERE FOR YOU TO KEEP YOU **AHEAD**

Easy servicing and maintenance routines keep downtime to a minimum.

» **Maximum uptime, minimum service costs – the new TERRUS CVT.**

https://truckmanualshub.com/

YOUR **PARTNER** TO RELY ON

For more than 70 years, STEYR has been a synonym for innovation, reliability and stability. Not only in Austria, but also in many parts of Europe. Developed together with farmers, built by and for farmers, STEYR tractors have once again revolutionised local agriculture.

Our STEYR factory in St. Valentin, Austria, is one of the most modern development and production facilities for agricultural machinery world-wide. Here we work every day on new innovative concepts and technologies, in order to build tractors for today and for tomorrow that you can simply rely on.

https://truckmanualshub.com/

https://truckmanualshub.com/

PRIMARILY **SUSTAINABLE**

Our tractors must meet the toughest demands, from the point of view both of our customers and the environment. These aims go hand in hand, as our efficient solutions not only help save time and fuel, but also get top marks regarding sustainability. This fact has already led our CNH Industrial Group nine times to the top of the Dow Jones Sustainability Index.

https://truckmanualshub.com/

Environmentally friendly manufacturing

For us, sustainability starts during production: Our CNH Industrial Group covers 56% of its power requirement with renewable energy and utilises more than 90% of its generated waste as well as approx. 30% of the waste water on site.

Efficient technologies

With innovative systems, our precision agricultural technology S-TECH helps increase the productivity and comfort of our tractors and lowers emissions to a minimum.

Reliable know-how

Our most valuable resources are our employees. Therefore values such as safety in the workplace and through continuous training are very important for us.

Sustainable concepts

For the further development of our tractors, we place an extra focus on environmentally-friendly technologies in order to keep fuel and energy consumption as low as possible.

https://truckmanualshub.com/

ALWAYS THERE FOR YOU

STEYR Service is the partner you can trust to get the best performance from your STEYR tractor. No matter what you need, STEYR Service is available 24/7.

Individual financing

Together with CNH Industrial Capital, STEYR Service offers you tailor-made financing solutions as well as leasing and rental offers at fixed rates. Have a chat with your STEYR dealer about your requirements.

Original performance with original parts

We work every day to make sure every spare part is available and delivered as quickly as possible.
Thanks to our dealers' extremely well-managed stock, we can often deliver the same day or even right there and then, so you can quickly get back to the work that matters.

Product training courses

In cooperation with your STEYR dealer, we regularly offer product training courses to help you make the most of your tractor and solutions including S-TECH.

https://truckmanualshub.com/

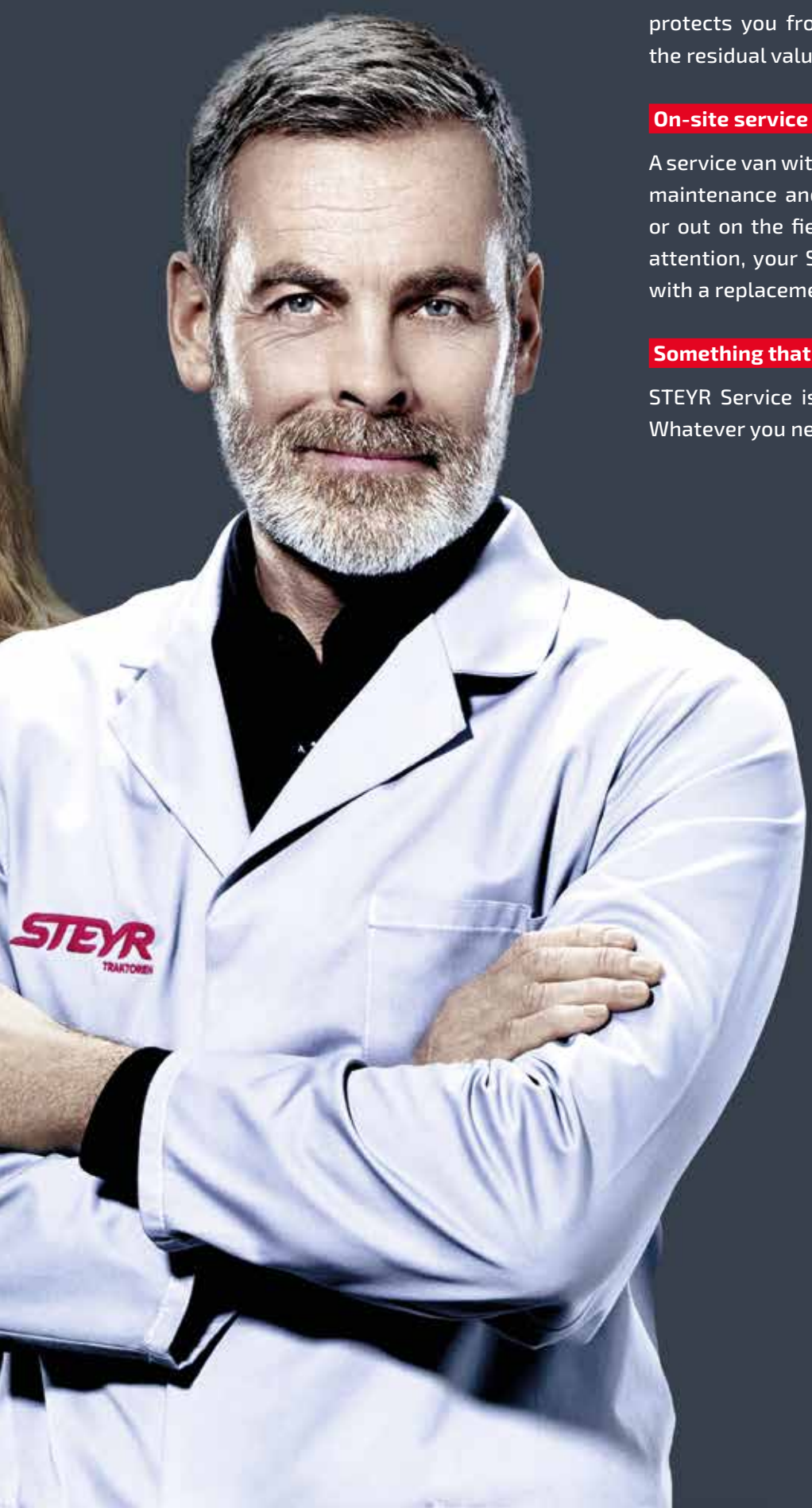

Perfect all-around protection

STEYR PROTECT manufacturer warranty coverage protects you from unexpected costs and increases the residual value of your STEYR tractor.

On-site service

A service van with highly trained technicians does the maintenance and repair work on-site – at the farm or out on the field. If your tractor needs a bit more attention, your STEYR dealer will try to provide you with a replacement machine.

Something that you can depend upon

STEYR Service is always there for you – 24/7/365. Whatever you need, just call us on **0800 7839 7000.**

https://truckmanualshub.com/

MAINTENANCE THAT TAKES MINIMAL TIME

SIMPLE SERVICING

1

2

1 **REMOTE CAPABILITIES** helps to maximise uptime and keep operators in the field.

2 Single-section **BONNET** supported by gas struts can be lifted into two positions (45°/90°) even with a front-mounted implement.

3 Checking of **OIL LEVEL** and topping up without lifting the bonnet.

3

https://truckmanualshub.com/

When the weather is right, when the soil conditions are good, when the job needs doing now, you don't have a lot of time to spare. And you don't want to spend much of it on servicing, even where simple daily checks are concerned.

That's why the STEYR TERRUS CVT is designed with numerous small service touches that add up to make a big difference to downtime. The fuel tank is easily filled from ground level, and the engine oil level can be checked without raising the hood, and neither is it necessary to lift it to access the filler cap should a top-up be needed.

Added connectivity helps to maxime uptime and keep operator in the field via support features available in the TERRUS CVT.

Remote service support, allows dealers to remotely identify maintenance and service needs. Remote display viewing allows farm manager or dealer to view exactly what an operator is seeing. And firmware Over-the-Air (FOTA) allows dealers to push wireless updates to operating firmware.

4

4 Continuous cleaning via a **PICLON FILTER** ensures that the filter only needs to be maintained when the corresponding warning lamp lights up.

5 Fast and simple cleaning of the **RADIATOR** and **AIR-CONDITIONING SYSTEM**.

6 Comfortable **FUEL TANK** filling.

5

6

https://truckmanualshub.com/

MODEL		6250 TERRUS CVT		6270 TERRUS CVT		6300 TERRUS CVT	
TRANSMISSION							
S-Control™ CVT Continuously variable transmission Driving speed* 0-50kph ECO or 0-40kph ECO		●		●		●	
ENGINE							
Common rail diesel engine with HI-eSCR2 technology, 24 valves, turbocharger and intercooler, fulfills emission standards Stage V Number of cylinders / Capacity [cm³]		6 / 6,728		6 / 6,728		6 / 6,728	
Max. engine power ECE R120[1)] [kW/hp]	**Rated engine power** ECE R120[1)] [kW/hp]	201 / 273	184 / 250	212 / 288	199 / 271	230 / 313	221 / 300
Engine speed at max. engine power [rpm]	**Rated engine speed** [rpm]	1,800	2,100	1,800	2,100	1,800	2,100
Max. torque [Nm @ 1,400rpm]		1,173		1,194		1,282	
Torque increase OECD [%]		40		32		28	
Fuel tank Diesel / AdBlue® [l]		410 / 96		630 / 96		630/96	
PTO							
Shiftable with progressive electro-hydraulic engagement with optional PTO management	**PTO speed** [rpm] 540 / 540E / 1,000 / 1,000E	●		●		●	
	Engine speeds [rpm] 1,871 / 1,598 / 1,853 / 1,583	●		●		●	
	PTO shaft type	1 3/8" 21-splines / 1 3/8" 6-splines / 1 3/4" 20-splines		1 3/8" 21-splines / 1 3/8" 6-splines / 1 3/4" 20-splines		1 3/8" 21-splines / 1 3/8" 6-splines / 1 3/4" 20-splines	
	Front PTO* 1,000 @ 1,886 1,000E @ 1,585 engine speed [rpm]	○		○		○	
HYDRAULICS							
EHR hitch control with dynamic vibration damping Ride Control		●		●		●	
Max. pump flow rate with pressure/volume control, load Sensing	165l/min	●		●		●	
	220l/min	–		○		○	
Max. operating pressure [bar]		215		215		215	
Max. lifting capacity [kg]		11,058		11,058		11,058	
Remote valves	**rear, up to 5 electrical can be configured**	○		○		○	
	midmounted, up to 3 electrical	○		○		○	
Hydraulic linkage Cat III/IVN with high-speed tail hook		●		●		●	
Integrated front hitch* max. lifting capacity [kg]		6,016		6,016		6,016	

https://truckmanualshub.com/

MODEL		6250 TERRUS CVT	6270 TERRUS CVT	6300 TERRUS CVT
ALL-WHEEL DRIVE				
Engagement electro-hydraulic with traction management		●	●	●
FRONT AXLE STEERING				
Suspended front axle		●	●	●
Steering system Hydraulic, load-sensing system		●	●	●
Steering wheel Height- and tilt-adjustable		●	●	●
Steering angle Track width[1] 1,930mm [°]		55	55	55
Min. turning radius Track width[1] 1,930mm [m]		7.7	7.7	7.7
BRAKES				
Wet dual brake discs, hydraulically actuated		●	●	●
All-wheel brake with Opti-Stop		○	○	○
Two-line compressed air braking system		○	○	○
S-Brake patented trailer brake system		○	○	○
TYRES				
Maximum tyres[3]	Front	600/70R30	650/60R34	650/60R34
	Rear	710/70R42	710/75R42	710/75R42
WEIGHT				
Approximate shipping weight* [kg]		11,530	11,530	11,530
Permissible total weight [kg]		16,800	16,800	16,800
DIMENSIONS[1]				
Max. length [mm]		5,825		
Min. / Max. width [mm]		2,536 / 2,993		
Total height [mm]		3,457		
Wheelbase [mm]		2,995		
Min. – max. track width front [mm]		1,858 – 2,258		
Min. – max. track width rear with flange axle [mm]		1,840 – 2,052		
Min. – max. track width rear with adjustable bar axle [mm]		1,840 – 2,374		

● Standard ○ Optional – Not available

*Depending on country-specific legislative requirements and specifications

[1] ECE R120 complies with ISO 14396 and 97/68EC

[2] With standard tyres

[3] Other tyres available as special equipment on request (i.e. as cost options)

https://truckmanualshub.com/

You drive better when you are safe. Before using this vehicle, please read the Operating Manual and become familiar with the use of each of the controls. Note the contents of the instruction panels and use the safety equipment for your own personal safety. This brochure is intended for use internationally. The availability of a few models and of standard and special equipment items may vary from one country to another.

STEYR reserves the right at any time and without prior announcement to make changes to the design and technical version without this in any way obliging STEYR to transfer these to units already sold.
Details, descriptions and pictorial material reflect the current status at the date of publication, but can be amended without prior announcement and at any time. Pictorial materials may show certain national versions, items of special equipment as well as non-complete standard versions.

TP01 / SM / 07.21 / Printed in Austria – Cod. n. 21S0051INB
www.steyr-traktoren.com

steyr-traktoren.com

STEYR TRAKTOREN