https://truckmanualshub.com/

INSTRUCTION HANDBOOK

Electric Stacker (PS12/15CB-C)

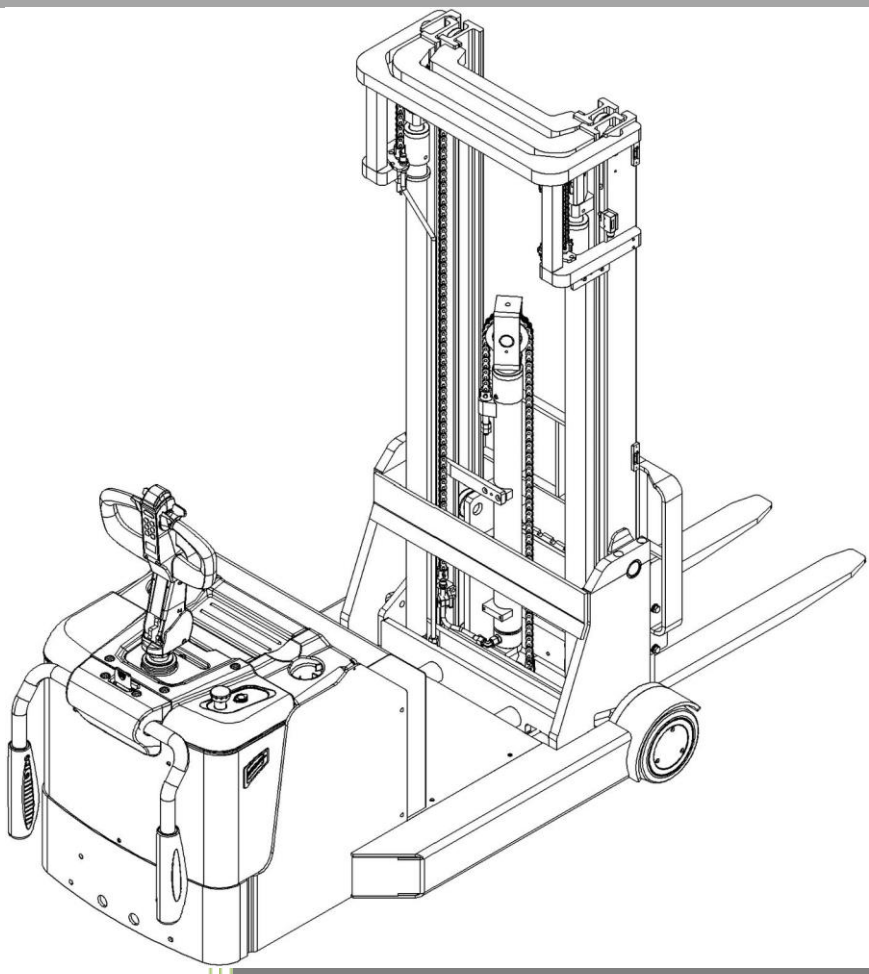

WARNING

Do not use the electric truck before reading and understanding these operating instructions.

NOTE:

- **Please check the designation of your present type at the last page of this document as well as on the ID-plate.**
- **Keep for future reference.**

Version 06/2020

PS12/15CB-C-SMS-001-EN

https://truckmanualshub.com/

FOREWORD

Before operating the stacker, read this ORIGINAL INSTRUCTION MANUAL carefully and understand the usage of the stacker completely. Improper operation could create danger.

This manual describes the usage of different electric pallet stackers. When operating and servicing the stacker, make sure, that it applies to your type.

Keep this manual for future reference. If this or the warning/ caution labels are damaged or got lost, please contact your local dealer for replacement.

This stacker complies with the requirements according to EN 3691-1; -5 (Industrial trucks- safety requirements and verification, part 1; part 5), EN 12895 (Industrial trucks- electromagnetic compatibility), EN 12053 (Safety of industrial trucks- test methods for measuring noise emissions), EN 1175 (Industrial truck safety – electrical requirements), assumed the truck is used according to the described purpose.
The noise level for this stacker is 70 dB(A) according to EN 12053.
The vibration is 0.85 m/s2 according to EN 13059 (if the stacker has pedals).

ATTENTION:

- Environmentally hazardous waste, such as batteries, oil and electronics, will have a negative effect on the environment, or health, if handled incorrectly.

- The waste packages should be sorted and put into solid dustbins according to the materials and be collected disposal by local special environment protection bureau. To avoid pollution, it’s forbidden to throw away the wastes randomly.

- To avoid leaking during the use of the products, the user should prepare some absorbable materials (scraps of wooden or dry duster cloth) to absorb the leaking oil in time. To avoid second pollution to the environment, the used absorbable materials should be handed in to special departments in terms of local authorities.

- Our products are subject to ongoing developments. Because this handbook is only for the purpose of operating /servicing the pallet truck, therefore please have understanding, that there is no guarantee out of particular features out of this handbook.

NOTE: On this manual, the left sign means warning and danger, which can lead to death or serious injury if not followed.

Copyright

The copyright remains with the company, mentioned on the CE- certificate at the end of this document or, if sold within the USA, with the company, mentioned on the company sticker.

https://truckmanualshub.com/

Table of Contents

1. CORRECT APPLICATION 5
2. DESCRIPTION OF THE PALLET STACKER 6
   a. Overview of the main parts 6
   b. Main technical data 7
   c. Description of the safety devices and warning labels (Europe and other, except USA) 10
   d. Identification plate 10
3. WARNINGS, RESIDUAL RISK AND SAFETY INSTRUCTIONS 11
4. COMMISSIONING, TRANSPORTING, DECOMMISSIONING 12
   a. Commissioning 12
   b. Lifting/ transportation 12
   c. Decommissioning 13
5. DAILY INSPECTION 13
6. OPERATION INSTRUCTIONS 13
   a. Parking 14
   b. Residual lift diagram 14
   c. Lifting 14
   d. Lowering 14
   e. Tilt of mast forward/backward 14
   f. Travelling 15
   g. Steering 15
   h. Braking 16
   i. Malfunctions 16
   j. Emergency 16
7. BATTERY CHARGING AND REPLACEMENT 17
   a. Replacement 17
   b. Battery Indicator (assembled on tiller) 17
   c. Charging 18
8. REGULAR MAINTENANCE 19
   a. Maintenance checklist 19
   b. Lubricating points 20
   c. Check and refill hydraulic oil 21
   d. Check the electrical fuses 21
9. TROUBLE SHOOTING 22
10. WIRING/ CIRCUIT DIAGRAM 24
   a. Electrical circuit diagram 24
   b. Hydraulic circuit diagram 25
11. SPECIALIZED STIPULATIONS FOR THE US- AMERICAN MARKET 27
   a. Foreword/ Compliance 27
   b. Description warning labels (only US- market) 28

https://truckmanualshub.com/

c. Technical data for US market 30
12. DECLARATION OF CONFORMITY (valid, if sold within the EU) 32

https://truckmanualshub.com/

1. CORRECT APPLICATION

It is only allowed to use this electric pallet stacker according to this instruction manual.

The stackers described in this manual are self-propelled electric power pallet stackers. The stackers are designed to lift, lower and transport palletized loads.

A wrong usage can cause human injuries or can damage the stacker.

The operator/ the operating company has to ensure the correct usage and has to ensure, that this pallet stacker is used only by staff, which is trained and authorized to use this truck.

The pallet stacker has to be used on substantially firm, smooth, prepared, level and adequate surfaces. The stacker is intended to be used for indoor applications with ambient temperatures between +5℃ and + 40℃ and for various transportation applications without crossing permanent obstacles or potholes. The work on ramps is allowed if ramp is not exceeding the allowed angle. While operating, the load must be placed approximately on the longitudinal centre plane of the stacker .

Lifting or transporting people is not allowed. If so, you must lower the loads to the lowest position.

The stacker is not allowed to be used on tail lifts or loading ramps.

The capacity is marked on capacity sticker as well on the Identification plate. The operator has to consider the warnings and safety instructions.
Operating lighting must be minimum 50 Lux.

Modification

No modifications or alterations to this pallet truck which may affect, for example, capacity, stability or safety requirements of the truck, shall be made without the prior written approval of the original truck manufacturer, its authorized representative, or a successor thereof. This includes changes affecting, for example braking, steering, visibility and the addition of removable attachments. When the manufacturer or its successor approve a modification or alteration, they shall also make and approve appropriate changes to capacity plate, decals, tags and operation and maintenance handbooks.

By not observing these instructions, the warranty becomes void.

https://truckmanualshub.com/

2. DESCRIPTION OF THE PALLET STACKER

a. Overview of the main parts

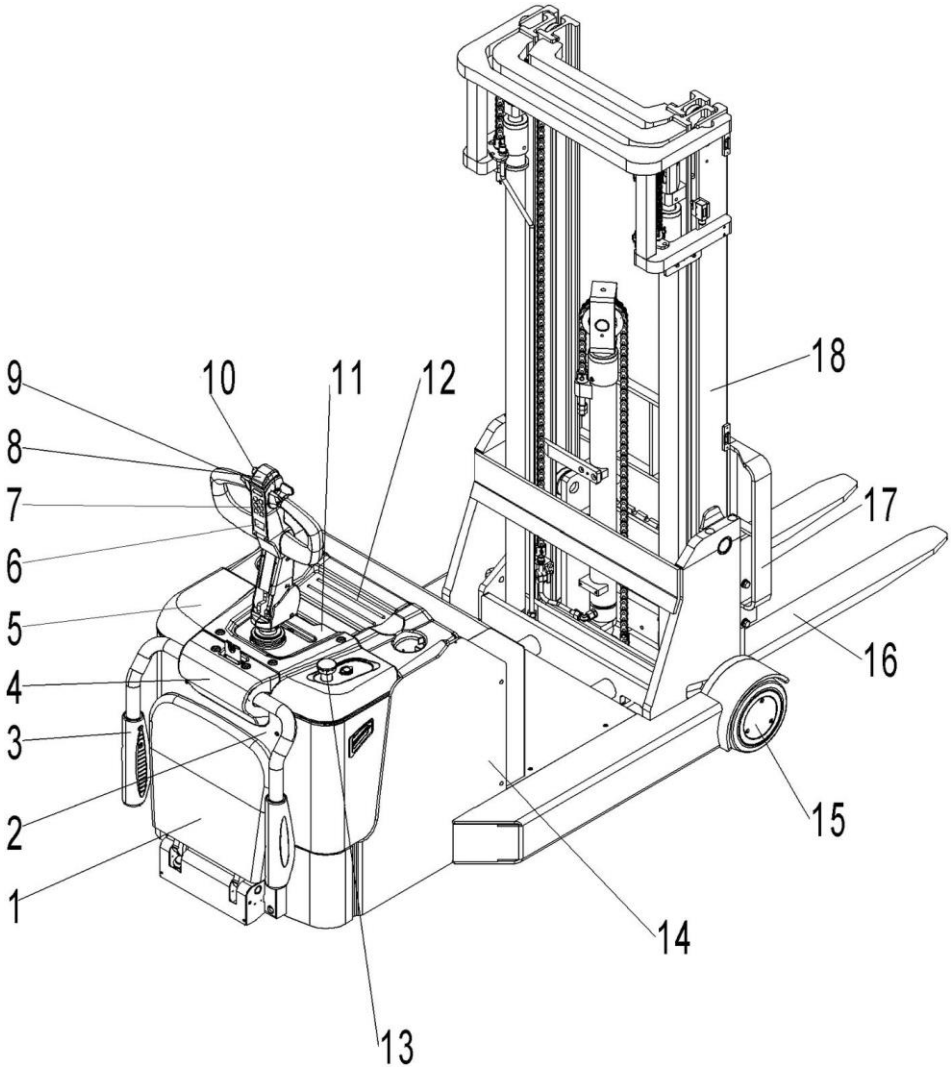

Fig. 1: Overview main components

1. Platform assembly
2. Cover unit
3. Protective arm assembly
4. Protective arm cover
5. Top cover
6. Battery indicator
7. Pin-code panel
8. Safety (belly) button
9. Tiller
10. Accelerator knob (butterfly knob)
11. Mid-cover
12. Battery cap
13. Emergency stop button
14. Chassis welding
15. Load wheel
16. Fork
17. Load backrest
18. Mast assembly

https://truckmanualshub.com/

b. Main technical data

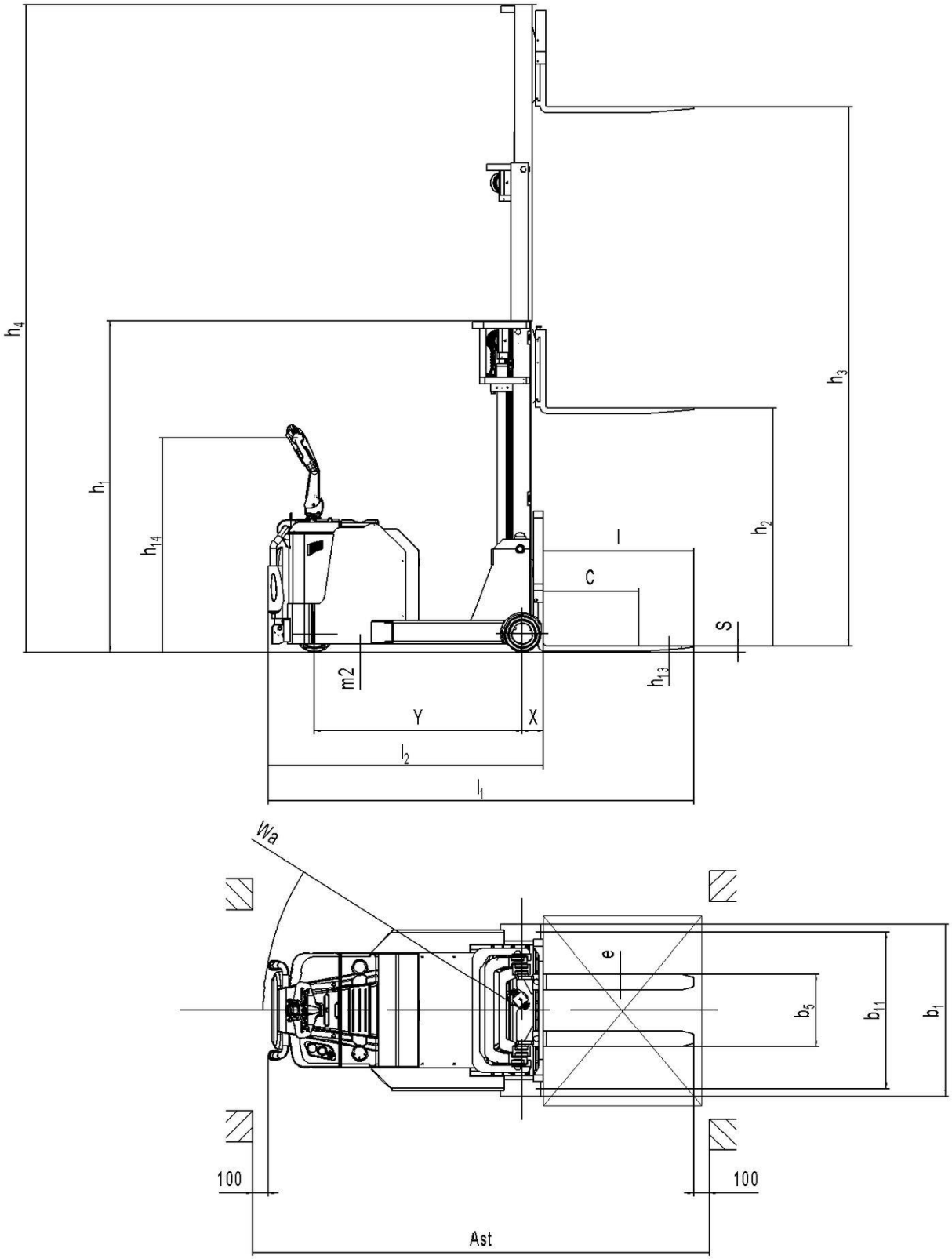

Fig. 2: Technical data

https://truckmanualshub.com/

Table1: Main technical data for standard version

Type sheet for industrial truck acc. to VDI 2198					
Distinguishing mark	1.2	Manufacturer's type designation		PS12CB-C	PS15CB-C
	1.3	Drive: electric (battery type, mains...), diesel, petrol, fuel gas		Electric	
	1.4	Operator type (hand, pedestrian, standing, order-picker)		Standing	
	1.5	Rated capacity/ rated load	Q(t)	1200	1500
	1.6	Load centre distance	C(mm)	500	
	1.8	Load distance, centre of drive axle to fork	X(mm)	135	
	1.9	Wheelbase	Y(mm)	1413	1550
Weight	2.1	Service weight	kg	1807	2127
	2.2	Axle loading, laden front/rear	kg	300/2781	350/3342
	2.3	Axle loading, unladen front/rear	kg	843/964	974/1153
Tyres, Chassis	3.1	Tires: solid rubber, superelastic, pneumatic, polyurethane		Polyurethane (PU)	
	3.2	Tyre size, front	∅ x w (mm)	∅230×75	
	3.3	Tyre size, rear	∅ x w (mm)	∅230×100	
	3.5	Wheels, number front/ rear(x=driven wheels)		1x/2	
	3.6	Thread, front	b10 (mm)	/	
Dimensions	4.1	Tilt of mast/fork carriage forward/backward	α /β(°)	1.5/3.5[1)]	
	4.2	Height, mast lowered	h1 (mm)	2400	2100
	4.3	Free lift	h2 (mm)	/	1500
	4.4	Lift	h3 (mm)	3600	4500
	4.5	Height, mast extended	h4 (mm)	4450	5350
	4.9	Height drawbar in driving position min./max.	h14 (mm)	940/1290	
	4.15	Height, lowered	h13 (mm)	40	
	4.19	Overall length	l1 (mm)	2790	2927
	4.20	Length to face of forks	l2 (mm)	1840	1977
	4.21	Overall width	b1 (mm)	1090	
	4.22	Fork dimension	s/e/l (mm)	35/100/950	
	4.25	Fork spread	b5 (mm)	220-760	
	4.32	Ground clearance, centre of wheelbase	m2 (mm)	52	
	4.33	Aisle width for pallets 1000X1200 crossways	Ast (mm)	2991	3125
	4.34	Aisle width for pallets 800×1200 lengthways	Ast (mm)	3076	3210
	4.35	Turning radius	Wa (mm)	1738	1872
Performance data	5.1	Travel speed, laden/ unladen	Km/h	5.2/6	5.2/6
	5.2	Lift speed, laden/ unladen	mm/s	89/129	105/150
	5.3	Lowering, laden/ unladen	mm/s	90/87	114/97
	5.8	Max. gradeability, laden/ unladen	%	4/15	4/12
	5.10	Service brake		Electromagnetic	

https://truckmanualshub.com/

Electric- motor	6.1	Drive motor rating S2 60min	kW	1.6	
	6.2	Lift motor rating S3 10%	kW	2.2	3.0
	6.3	Battery according to DIN 43531/35/36 A, B, C, no		DIN	
	6.4	Battery voltage/ nominal capacity K_5	V/Ah	24/210	24/270[2)]
	6.5	Battery weight	kg	217	288
	6.6	Energy consumption according to VDI 2198	Kwh/h	0.76	0.8
Addi- tional data	8.1	Type of drive unit		AC	
	8.4	Sound pressure at the driver's seat according to DIN EN 12053	dB(A)	<70	

1). Tilt-free configuration is available. 2).24V/350Ah is available.

Designation	Lowered mast height h1(mm)	Free Lift height h2(mm)	Lift height h3(mm)	Extended mast height h4(mm)	Lift+fork height h3+h13(mm)
One stage mast	2196	—	1600	2450	1660
Two stage mast	1850	—	2500	3350	2560
	2100	—	3000	3850	3060
	2200	—	3200	4050	3260
	2400	—	3600	4450	3660
	2600	—	4000	4850	4060
Three stage mast FFL (Full Free Lift)	1800	1200	3600	4450	3660
	1935	1330	4000	4850	4060
	2035	1430	4300	5150	4360
	2100	1500	4500	5350	4560

https://truckmanualshub.com/

C. Description of the safety devices and warning labels (Europe and other, except USA)

A. Crane hook label
B. Warning decal: Do not stand under or on the forks
C. Load curve sticker
D. “No passengers” decal
E. Identification plate (ID-plate)
F. Sticker to read and follow these instructions

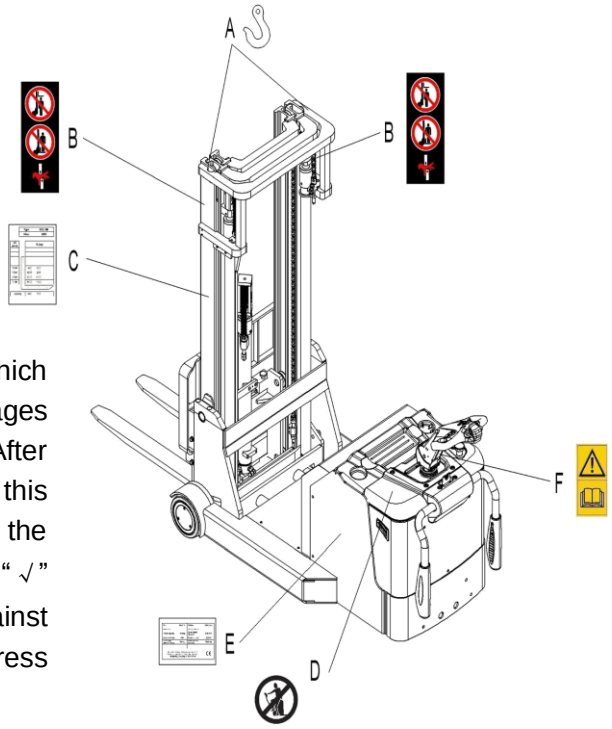

Fig.3: Safety and warning labels

The truck is equipped with an emergency button (13) which stops all lifting-, lowering-, driving- functions and engages the fail-safe electromagnetic brake when it is pressed. After checking the functions of the controller, by pulling this button out the truck can be operated. Before operating the stacker, type password on pin-code panel and press “√” button to activate the truck. To prevent against unauthorized access, press emergency button (13) or press “X” button of pin-code panel.

The truck is equipped with a safety (belly) button (8) which switches the driving function away from the operator, if the truck travels towards the operator and the tiller is activated in the tillers operating zone. Follow the instructions given on the decals. Replace the decals if they are damaged or missing.

d. Identification plate

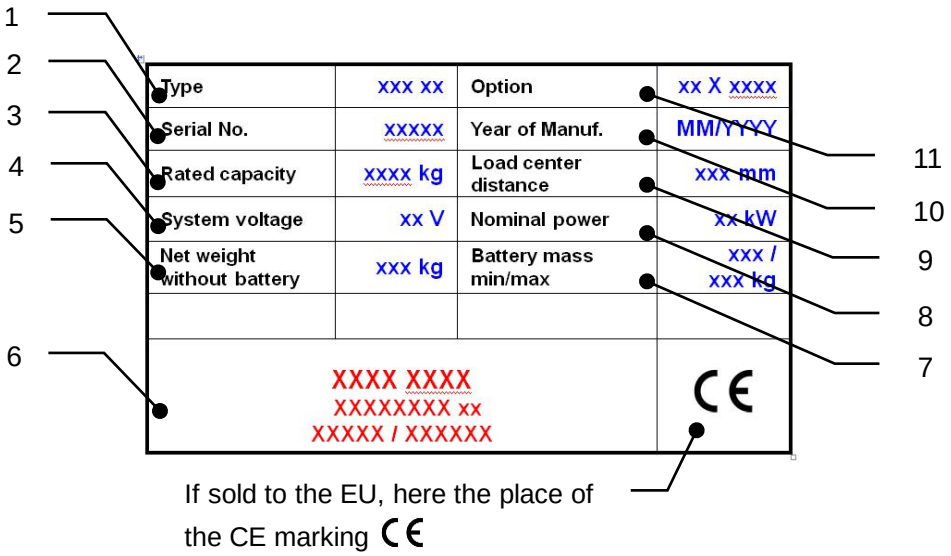

Fig. 4: Identification plate

https://truckmanualshub.com/

3. WARNINGS, RESIDUAL RISK AND SAFETY INSTRUCTIONS

DO NOT

- Lift the load higher than the lift point when operate the stacker outdoors.
- Put foot or hand under or into the lifting mechanism structure.
- Allow other person than the operator to stand in front of or behind the truck when it is moving or lifting/lowering.
- Overload the truck.
- Put foot in front of the wheels, injury could result.
- Lift people. People could fall down and suffer severe injury.
- Push or pull loads.
- Use the truck on ramps.
- Side or end load. Load must be distributed evenly on the forks.
- Use the truck with unstable, unbalanced not stable loads.
- Use truck without manufacturer's written consent.
- Lifted loads could become unstable at wind forces. In the case of wind forces do not lift the load if there is any influence to the stability.

Watch difference in floor levels when driving. Load could fall down or the truck could lose control. Keep watching the condition of load. Stop operating the truck if load becomes unstable. Brake the truck and activate the emergency button (13) by pushing when sliding load on or off the truck. If the truck has any malfunctions, follow chapter 6.
Practice maintenance work according to regular inspection. This truck is not designed to be water resistant. Use the truck under dry condition. Prolonged continuous operation might cause damage of the power pack. Stop operation if temperature of hydraulic oil is too high.

- When operating the electric pallet stacker, the operator has to wear safety shoes.
- The truck should be used indoors with ambient temperatures between +5℃ and + 40℃.
- The minimum operating lighting must be more than 50 Lux.
- Use the truck on ramps.
- To prevent unintended sudden movements when not operating the truck (i.e. from another person, etc.), turn off the power for non operation.
- Lift loads may influence the operation view, take safety actions or with the help of auxiliary means to keep good view for the operator.
- Avoid collision between the folding pedal and other articles, especially the collision and shearing when traveling forwards. Keep safe operating speed at all times based on the environment.

https://truckmanualshub.com/

4. COMMISSIONING, TRANSPORTING, DECOMMISSIONING

a. Commissioning

Table 2: Commissioning data

Type	PS12CB-C	PS15CB-C
Commissioning weight [kg]	1842	2162
Dimensions [mm]	3600	4500

After receiving our new pallet stacker or for re-commissioning you have to do following before (firstly) operating the truck:

- Check if are all parts included and not damaged
- Check the package and charging of the battery (follow chapter 7)
- Do the work according to the daily inspections as well as functional checks.

b. Lifting/ transportation

For transporting, remove the load, lower the forks to the lowest position and fix the truck safely with dedicated crane or lifting equipment according to Fig. 5.

Lifting

Use dedicated crane and lifting equipment.
Do not stand under the swaying load.
Do not walk into hazardous area during lifting.

Transportation

ALWAYS FASTEN TRUCK SECURELY DURING TRANSPORTATION ON A LORRY OR TRUCK.

Park the truck securely and lash the truck according to the points identified in Fig. 6. Lift the truck to its destination and place the truck securely before removing the lifting equipment. The fixing points are according to the Fig. 6.
Lower the forks and park the truck securely.
Fasten the truck according to Fig. 6 by fixing dedicated lashing belts to chassis, fork carriage and mast, and fasten the other side at the transporting truck.

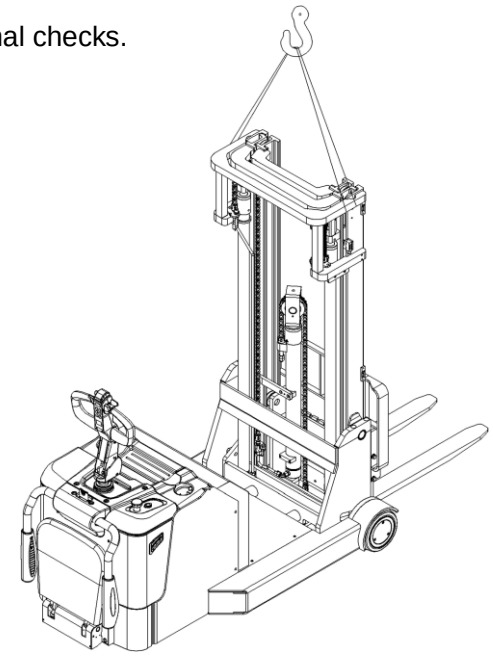

Fig. 5: Lift with a crane

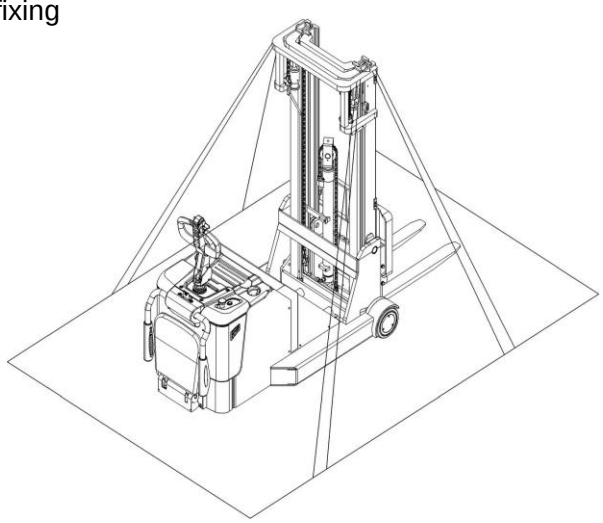

Fig. 6: Fixing points

https://truckmanualshub.com/

C. Decommissioning

For storage, remove the load, lower the truck to the lowest position, grease all greasing points mentioned in this handbook (regular inspection), and eventually protect the truck against corrosion and dust. Remove the batteries and jack the truck safely, so that there will be no crush after storage.

For final decommissioning hand in the truck to a designated recycling company. Oil, batteries and electric components must be recycled due to legal regulations.

5. DAILY INSPECTION

This chapter describes pre-work checks before operating the truck.

Daily inspection is effective to find the malfunction or fault on this truck. Check the truck on the following points before operation.

REMOVE LOAD FROM TRUCK AND LOWER THE FORKS.
DO NOT USE THE TRUCK IF ANY MALFUNCTION IS FOUND.

- Check for scratches, deformation or cracks.
- Check if there is any oil leakage from the cylinder.
- Check the function of driving with tiller in its vertical position.
- Check the chain and rollers for any damage or corrosion.
- Check the smooth movement of the wheels.
- Check the function of the emergency brake by activating the emergency button.
- Check the functions of braking by activating the switches of the tiller.
- Check the lifting and lowering functions by operating the buttons.
- Check the horn.
- Check if all bolts and nuts are tightened firmly.
- Check the speed limit sensor.
- Visual check if there are any broken oil pipes or electric wires.
- If supplied with a load backrest, check it for damages and correct assembling.

6. OPERATION INSTRUCTIONS

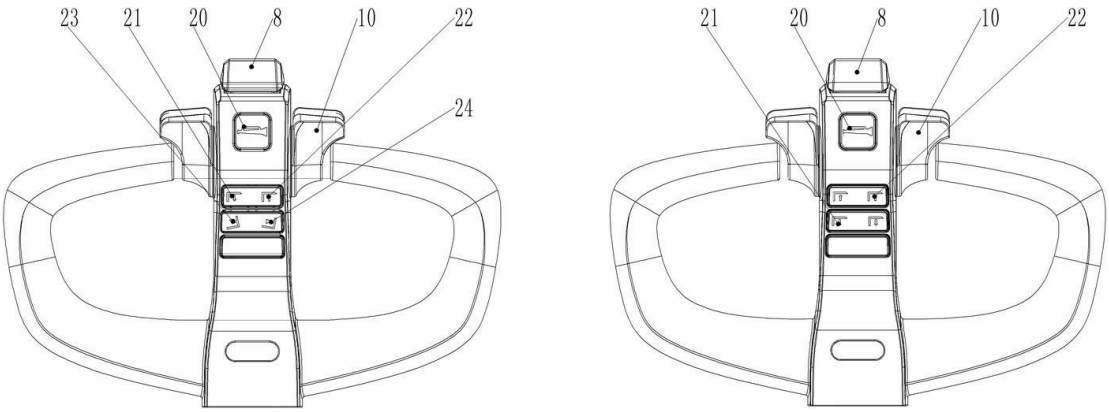

Fig.7: Tiller operating controls

https://truckmanualshub.com/

PLEASE FOLLOW THE WARNINGS AND SAFETY INSTRUCTIONS (CHAPTER 3) BEFORE PERATING THIS STACKER.
MAKE SURE LOADS OR OTHER EQUIPMENT WILL NOT CAUSE POOR VISIBILITY BEFORE OPERATING THIS STACKER.

Make sure that the load is placed horizontally and stably and the daily inspection is carried out. The operator must carefully pull emergency button (13) out. Press horn button (20) to activate the horn.

a. Parking

DO NOT PARK THE TRUCK ON INCLINED SURFACES.

The truck is equipped with an electromagnetic fail-safe stopping and parking brake.
Always lower the forks fully and park the truck in safe area. Press the emergency switch (13).

b. Residual lift diagram

The residual lift diagram indicates the maximum capacity Q [kg] for a given load centre c [mm] and the corresponding lift height H [mm] for the truck with horizontal load.
The white marks on the mast indicate the specific lifting limits that can be reached.
For example, with a load centre of gravity distance c of 600 mm and a maximum lift height H of 4500 mm, the maximum capacity Q is 1000 kg.

Type	PS15CB-C
Mast	4500mm

h3 (mm)	Q (kg)		
4500	1000	800	
3600	1200	1000	
3000	1400	1200	
2500	1500	1300	
c(mm)	600	700	

Fig. 8: Residual lift diagram

c. Lifting

DO NOT OVERLOAD THE TRUCK! MAXIMUM CAPACITY IS 1200KG FOR PS12CB-C AND 1500KG FOR PS15CB-C. LIFT ONLY THE CAPACITY ALLOWED ACCORDING TO THE RESIDUAL LIFT DIAGRAM.

Travel with the fully lowered forks on the forks legs and press the lifting button (21) until you reach the desired lifting height.

d. Lowering

If the forks are in the racking, firstly travel out of the racking carefully with or without the pallet. By travelling out of the racking, take care that the forks are not touching the racking.
Press the lowering button (21) carefully.
Lower the load until the forks are clear of the pallet, then drive the truck carefully out of the load.

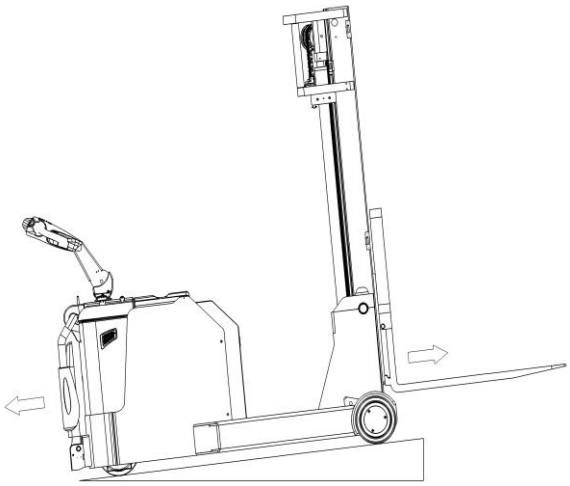

Fig. 9: Load facing uphill

e. Tilt of mast forward/backward

Press tilt forward button (23), the mast will tilt forwards and the pallet frame cannot be lifted.
Press tilt backward button (24), the mast will tilt backwards.

https://truckmanualshub.com/

f. Travelling

TRAVEL ON INCLINES ONLY WITH THE LOAD FACING UPHILL.
DO NOT TRAVEL ON INCLINES MORE THAN SPECIFIED TECHNICAL DATA.
TRAVELLING IS ONLY ALLOWED IF THE FORKS ARE LOWERED DOWN TO THE LIFTING POSITION (<300MM).

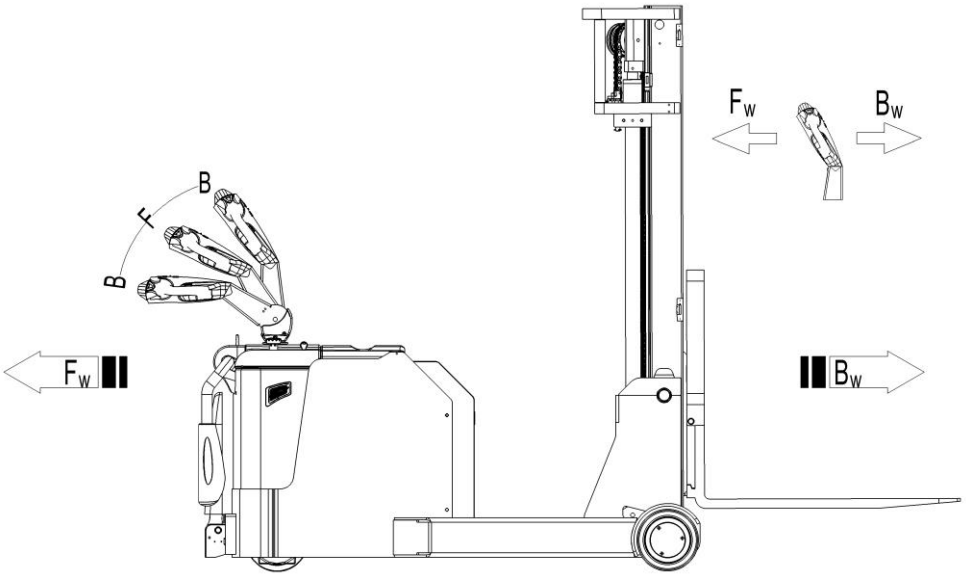

Fig.10: Operating direction

After starting the truck by activation from Pin-code panel and carefully pull out the emergency button. Then move the tiller to the operating zone (‘F’, Fig.10).

Turn the accelerator knob to the desired direction forward ‘Fw.’ Or backwards ‘Bw.’(Fig. 10).
Control the travelling speed by moving accelerator knob (10) carefully until you reached desired speed.
If you move the accelerator knob back to the neutral position, the controller decelerates the truck until the truck stops. If the truck stops, the parking brake will be engaged.
Carefully drive the truck to the destination. Watch the route conditions and adjust the travelling speed via the accelerator knob.

Operation models for this truck:

- Put down the platform (1), open wide the protective arms to the protection position.
  Travel at maximum speed.
- Put down the platform (1), fold the protective arms (3).
  Depends on the parameters of the controller, reduce the speed and travel within 6km/h.
- Put the platform (1) to the initial position, fold the protective arms (3).
  Depends on the parameters of the controller, reduce the speed and travel within 6km/h.

g. Steering

THE TRUCK EQUIPS WITH EPS SYSTEM, CAREFULLY OPERATE THE TRUCK.

Steer the truck by moving the tiller to left or right side.

https://truckmanualshub.com/

h. Braking

THE BRAKING PERFORMANCE DEPENDS ON THE TRACK CONDITIONS AND THE LOAD CONDITIONS OF THE TRUCK

The braking function can be activated in several ways:

- By moving the accelerator knob (10) back to the initial ‘0’ position or by releasing the knob, the regenerative braking is activated. The truck starts braking until it stops.
- By moving the accelerator knob (26) from one driving direction directly to the opposite direction, the truck brakes regenerative until it starts traveling into the opposite direction.
- The truck brakes, if the tiller is moved up or down to the braking zone (‘B’). If the tiller is released, the tiller moves automatically up to the upper baking zone (‘B’).The truck starts braking until it stops.
- The safety (belly) button (8) prevents the operator from being crushed. If this button is activated, the truck decelerates and/ or starts traveling backwards (‘Bw.’) for a short distance and stops. Please consider, that this button also operates, if the truck is not traveling and the tiller is in the operating zone.

i. Malfunctions

If there are any malfunctions or the truck cannot be operated, please stop using the truck and activate the emergency button (13) by pressing it. If possible, park the truck in a safe area.
Inform immediately the manager and/ or call your after-sales service. If necessary, move the truck out of the operating area by using dedicated towering/ lifting equipment.

j. Emergency

In emergencies or in the event of tipping over, keep safe distance please. If possible, press the emergency button (13). All electrical functions will be blocked.

https://truckmanualshub.com/

7. BATTERY CHARGING AND REPLACEMENT

- Only qualified personnel are allowed to service or charge the batteries. Must follow the instructions of this manual and the explanations of the manufacturer.
- The truck is equipped with lead acid battery.
- Recycling of batteries undergoes national regulations. Please follow these regulations.
- By handling batteries, open fire is not allowed, as it may cause gas explosion.
- In the area of battery charging neither burning materials nor burning liquids are allowed. Smoking is prohibited and the area must be ventilated.
- Park the truck securely before starting charging or assembling/replacing batteries.
- Before finishing the maintenance work, make sure that all cables are connected correctly and there are no disturbing towards other parts of the truck.

The lead acid battery type for the truck:
PS12CB-C:1pcs, 24V-2PZS-210Ah
[624x212x602mm (L×W×H)]
PS15CB-C:1pcs, 24V-3PZS-270Ah/ 24V-3PZS-350Ah
[624x284x627mm (L×W×H)]

IT IS ONLY ALLOWED TO USE LEAD ACID BATTERY.
THE WEIGHT OF BATTERY WILL AFFECT OPERATION OF THE TRUCK.
PLEASE CONSIDER THE MAXIMUM OPERATING TEMPERATURE OF THE BATTERIES.

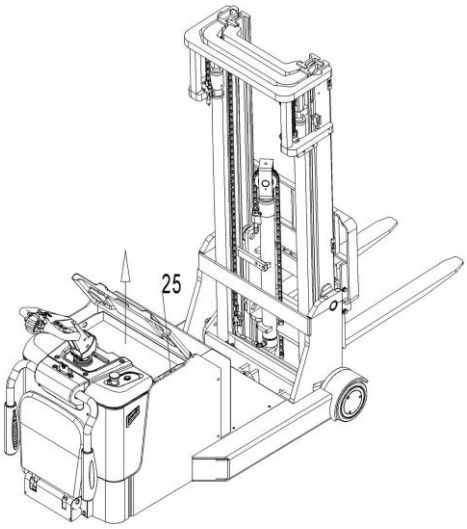

Fig. 11: Battery replacement

a. Replacement

Park the truck securely and press emergency button (13) to turn the power of the stacker. Remove the battery cover and then remove the connector (25). After that, remove the battery with specialized equipment. Note: if the equipment is not safe, the battery will be tipped over.
The battery assembling is in the reverse order. Please connect the positive terminal first, or it will cause damage to the truck.

b. Battery Indicator (assembled on tiller)

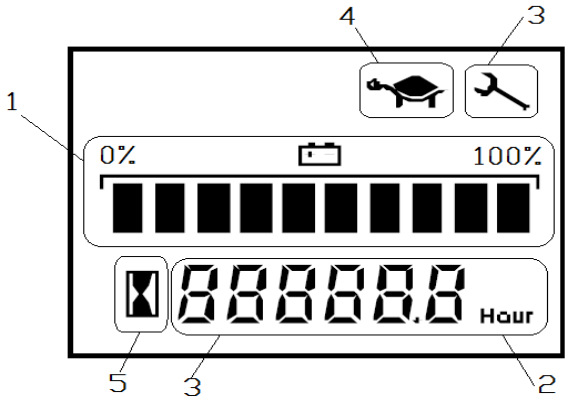

Fig. 12: Battery discharge indicator

https://truckmanualshub.com/

(1) Power display: 10 grids indicate 100% charge, each grid represents 10% charge, every 10% discharge with power out of one grid, if the remaining charge is less than 20%, the grids on the display screen flashes. When the battery is charged to the recovery voltage of the indicator, the display screen will show full recovery charge grids. Every time you turn on the display, the record/ memory is available;
(2) Hour-meter display: the working time of the truck is recorded in unit (hour) with accuracy of 0.1 hour. Every time you turn on the display, the record/ memory is available;
(3) Fault code display: it consists of two parts. One is the wrench symbol: wrench symbol showed on the screen indicates the fault of the truck, it will not be on the screen without fault; The other part is fault code: when the wrench symbol is displayed on the screen, the original position of the hour-meter displays the fault code. See the table of fault codes for details.
(4) Turtle speed display: the turtle symbol is normally off. Press the turtle speed button on the tiller, then the turtle symbol will display on the screen and the truck is in slow speed;
(5) Timing hourglass display: when the hour timing function of the tiller is activated, the hourglass symbol displays on the screen, if not, the hourglass symbol will not display.

C. Charging

- Ensure that you charge the battery with appropriate charger.
- Please fully understand the instructions for the charger before using it.
- Always follow these instructions.
- The room, where you are charging must be ventilated.
- The full charge status can be only checked from the discharge indicator. To control the status, the charging must be interrupted and the truck must be started.

Park the truck at a dedicated secured area with a dedicated power supply.
Lower the forks and remove the load;
Open the battery cap and keep it in vertical state.
Switch off the truck and connect the connector and the charger, then connect the charging plug to the power supply.
The charger starts charging the battery.
Disconnect the charger plug from the battery after the charger is completed.
Well connect the connector to the truck.
Close the battery cap.

https://truckmanualshub.com/

8. REGULAR MAINTENANCE

- Only qualified and trained personnel are allowed to do maintenance on this truck.
- Before maintaining, remove the load from the forks and lower the forks to the lowest position.
- If you need to lift the order picker, please use the specific binding equipment or lifting equipment mentioned in Chapter 4. Before lifting the order picker, please put the safety device (for instance designated jack, wedge, or wooden blocks) under the order picker to avoid accidental fall, movement or sliding.
- Please pay attention by maintain the tiller arm. The gas pressure springs are assembled by compression. Carelessness causes injury.
- Use approved and from your dealer released original spare parts.
- Please consider that oil leakage of hydraulic fluid can cause failures and accidents.

If you need to replace the wheel, please follow the instructions above. Casters must be round and free from abnormal wear.

Check the key items emphasized in the maintenance checklist.

a. Maintenance checklist

Table 3: Maintenance checklist

		Interval (Month)			
		1	3	6	12
	Hydraulic unit				
1	Check the hydraulic cylinder, piston for damage noise and leakage		•		
2	Check the hydraulic joints and hose for damage and leakage		•		
3	Check the hydraulic oil level, refill if necessary		•		
4	Refill the hydraulic oil (12 month or 1500 working hours)				•
	Mechanical system				
5	Check the forks for deformation and cracks		•		
6	Check the chassis for deformation and cracks		•		
7	Check if all screws are fixed		•		
8	Check mast and chain for deformation or damages, replace if necessary	•			
9	Check the gearbox for noise and leakage		•		
10	Check the wheels for deformation and damages, replace if necessary		•		
11	Lubricate the steering bearing				•
12	Check and lubricate the pivot points		•		
13	Lubricate the grease nipples	•			
	Electric system				
14	Inspect the electric wiring for damage		•		
15	Check the electric connections and terminals		•		
16	Test the Emergency switch function		•		
17	Check the electric drive motor for noise and damages		•		
18	Test the display		•		
19	Check if correct fuses are used, if necessary replace.		•		
20	Test the audio warning signal		•		

https://truckmanualshub.com/

21	Check the contactors		•		
22	Check the frame leakage (insulation test)		•		
23	Check function and wear of the accelerator		•		
24	Check the electrical system of the drive motor		•		
	Braking system				
25	Check brake performance, if necessary replace brake disc or adjust air gap		•		
	Battery				
26	Check the battery voltage		•		
27	Clean and grease the terminals and check for corrosion and damage		•		
28	Check the battery housing for damages		•		
	Charger				
29	Check the main power cable for damages			•	
30	Check the fail-safe protection during charging			•	
	Function				
31	Check the horn function	•			
32	Check the air gap of the electromagnetic brake	•			
33	Test the emergency braking	•			
34	Test the reverse and regenerative braking	•			
35	Test the safety (belly) button function	•			
36	Check the steering function	•			
37	Check the lifting and lowering function	•			
38	Check the buttons on the tiller	•			
39	Check the speed limit sensor (lift height >~600mm)	•			
40	Check the speed limit sensor (lift height >~1800mm)	•			
	General				
41	Check if all decals are legible and complete	•			
42	Carry out a test run	•			

b. Lubricating points

Lubricate the marked points according to the maintenance checklist.
The required grease specification is: DIN 51825, standard grease.

1. Bearings on load wheels
2. Axles of the mast
3. Chains
4. Chain rollers
5. Mast
6. Gears of the drive wheel

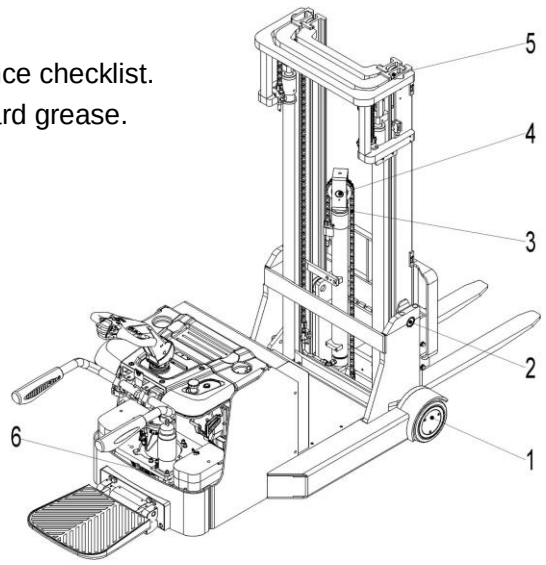

Fig. 13: Lubricating points

https://truckmanualshub.com/

C. Check and refill hydraulic oil

The required hydraulic l type is:

- H-LP 46, DIN 51524
- Viscosity is 41.4 – 47
- Oil volume: 10L

Waste material like used oil, waste batteries or others must be properly disposed and recycled according to the national regulations and if necessary brought to a recycling company.
The oil level in the oil tank should not be under the min marks for starting the stacker.

d. Check the electrical fuses

Remove the front panel, the fuses are located as shown in the following figure Fig. 14. The specification of the fuses are shown in the table 4.

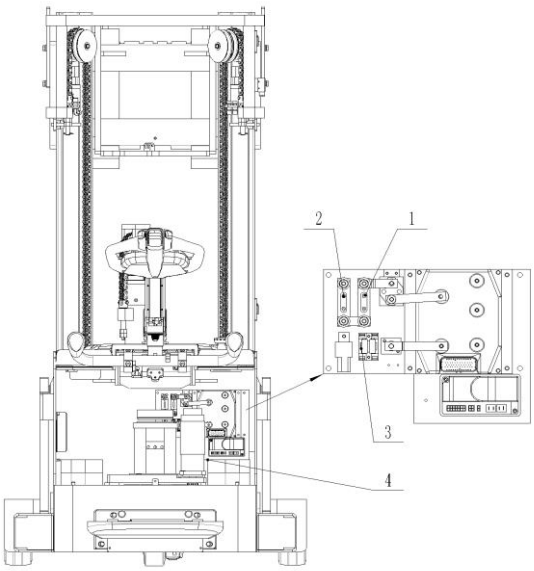

Fig. 14: Location of fuses

Table 4: Specification of the fuses

	Specification
FU01	150A
FU02	200A
FU1	10A
FU2	15A

https://truckmanualshub.com/

9. TROUBLE SHOOTING

IF THE TRUCK HAS MALFUNCTIONS FOLLOW THE INSTRUCTIONS THAT MENTIONED IN CHAPTER 6.

Table 5: Trouble shooting

TROUBLE	CAUSE	REPAIR
Loads cannot be lifted	Load weight is too high	Load the truck within rated capacity.
	Battery discharged	Charge the battery.
	Lifting fuse faulty	Check and replace the lifting fuse.
	Hydraulic oil level too low	Check and refill hydraulic oil.
	Oil leakage	Check and repair the seal performance of the oil hoses and/or cylinder.
	Lifting stops at ~1800mm	Fold the protective arms to the initial position.
	Lifting stops at ~1800mm	Check the sensor on the protective arm.
	1800mm height sensor failure	Check the sensor on the mast.
Oil leakage from air breathing	Excessive quantity of oil.	Reduce oil quantity.
Stacker cannot be operated	Battery is charging	Charge the battery completely and then remove the main power plug form the electrical socket.
	Battery not connected	Connect the battery correctly.
	Fuse failure	Check and eventually replace fuses.
	Battery discharged	Charge the battery.
	Emergency switch is activated	Block the emergency switch function by inserting and pulling the knob.
	Tiller is in the operating zone	Move the tiller firstly to the braking zone.
	Protective arms are in the open position, platform is folded upright	Move the protective arms into the downside position.
	Foldable platform or protective arms in one of the allowed positions	Check the proximate switches on the arms and platform.
	Protective arms or folding platform is not in the allowed positions	Check the correct function of the arms and/or platform.
Stacker only travels in one direction	The accelerator and the connectors are damaged.	Check the accelerator and the connectors.
Stacker travels	The battery is discharged.	Check the battery status by the discharge indicator.

https://truckmanualshub.com/

very slowly	The electromagnetic brake is engaged.	Check the electromagnetic brake.
	The relating tiller cables are disconnected or damaged	Check the tiller cables and connectors.
	Defective height sensor for reduced speed at ~300mm height	Check the sensor.
	Electric system overheated	Stop using and cool down the truck.
	Heat sensor failure	Check and if necessary replace heat sensor.
Stacker starts up suddenly	The controller is damaged.	Replace the controller.
	The accelerator cannot turn back to its neutral position.	Repair or replace the accelerator.

If the truck has malfunctions and can’t be operated out of the working zone, jack the truck up and go with a load handler under the truck and ensure the truck safety. Then move the truck out of the aisle.

https://truckmanualshub.com/

10. WIRING/ CIRCUIT DIAGRAM

a. Electrical circuit diagram

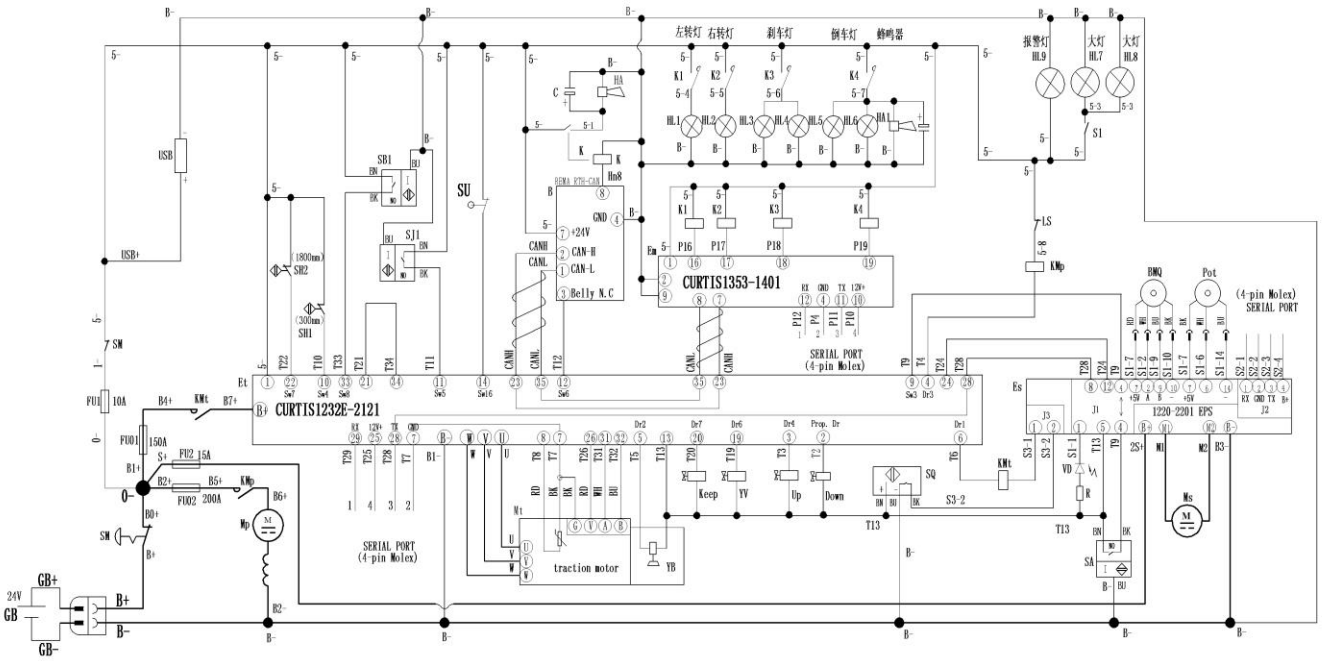

Fig. 15: Electrical circuit diagram

Table 6: Description of electrical components

Code	Item	Code	Item	Code	Item
GB	Battery(24V/210AH)	LS	Limit sensor	SQ	Proximity switch
ES	DC power switch	SU	Micro switch	Keep	Pressure retaining valve
FU01	Fuse	Up	Tilt up valve	SB1	Speed limit switch (protective arm)
FU02	Fuse	Down	Tilt down valve	SJ1	Speed limit switch (platform)
FU1	Fuse	SA	Interlock switch	SH1 SH2	Electromagnet switch
FU2	Fuse	USB	USB socket	HL1	Left signal light
KMt	Traction motor contactor	C	Capacitor	HL2	Right signal light
KMp	Pump motor contactor	HA	Horn	HL3 HL4	Brake signal light
Et	Controller	Pot	Steering potentiometer	HL5 HL6	Backup signal light
Es	Steering controller	YB	Electromagnet brake	HL7 HL8	Front light
B	CANBUS tiller	K	Horn relay	HL9	Warning light
Mt	Traction motor	VD	Diode	S1	Self-locking switch
Ms	Steering motor	R	Resistor	K1 K2 K3 K4	Relay
Mp	Pump motor	DYK	Power plug	YV	Lowering EM valve
Em	Additional bracket			BMQ	Steering motor encoder

https://truckmanualshub.com/

b. Hydraulic circuit diagram

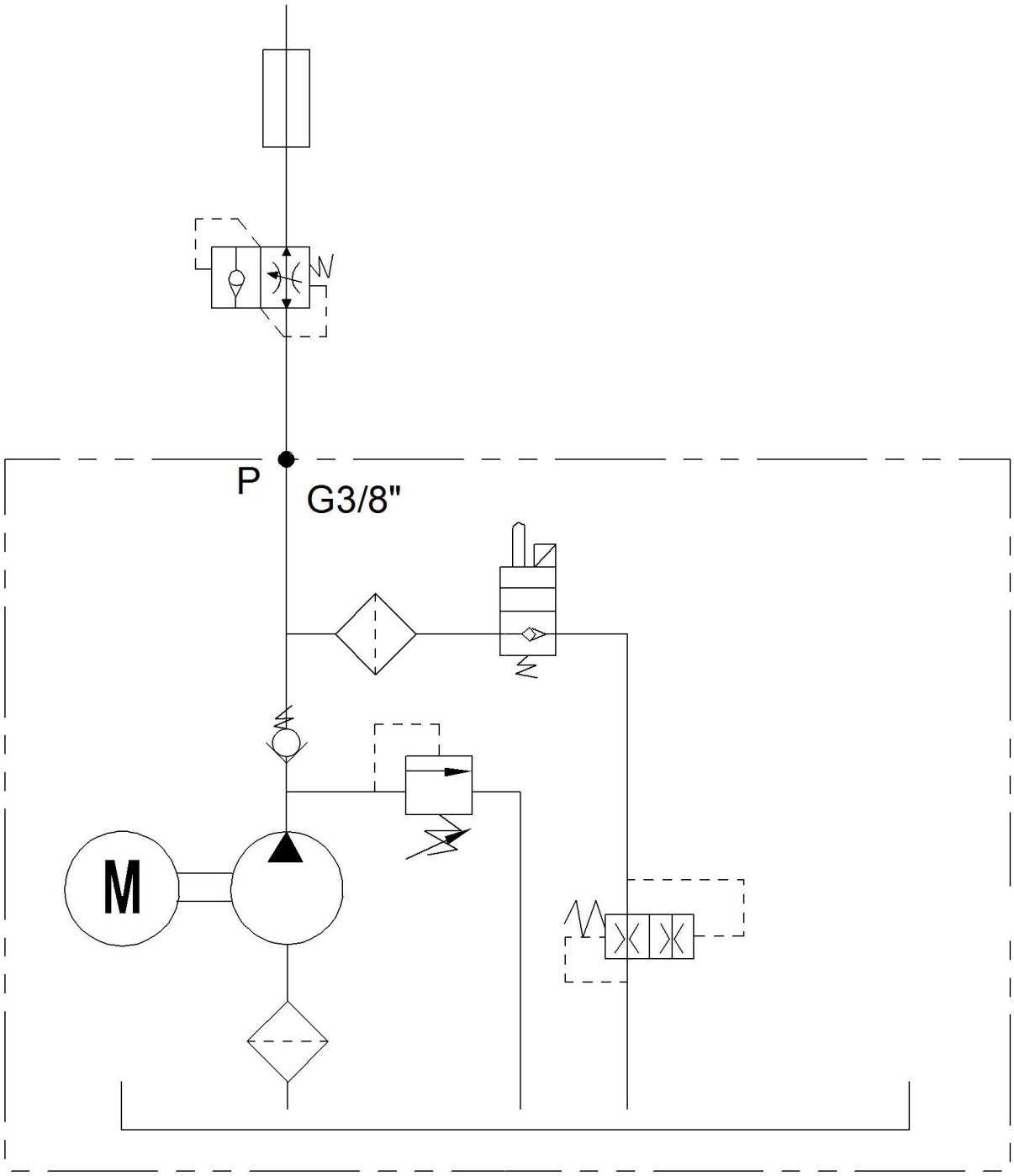

Fig. 16: Hydraulic circuit diagram(without tilting)

https://truckmanualshub.com/

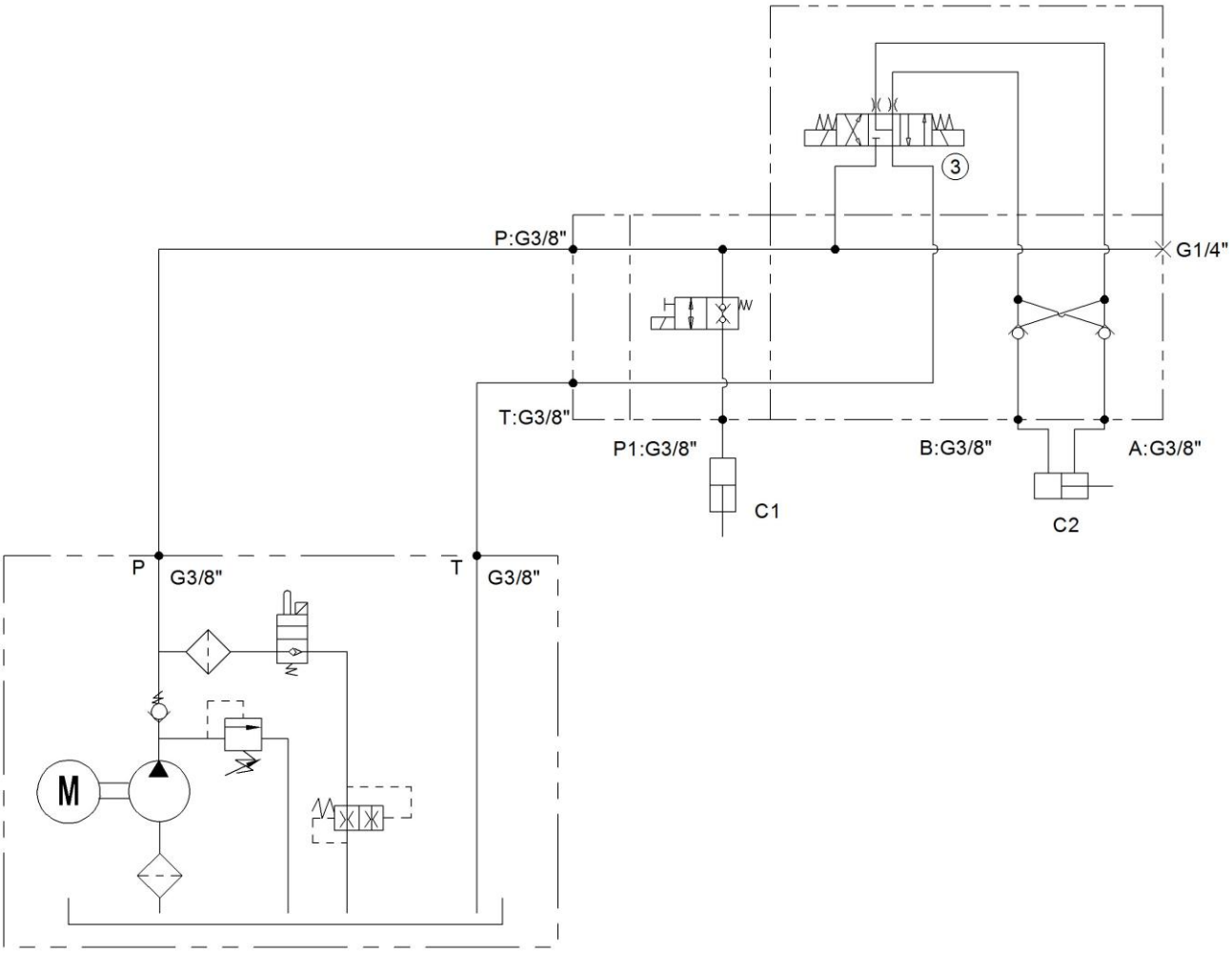

Fig. 17: Hydraulic circuit diagram(with tilting)

https://truckmanualshub.com/

11. SPECIALIZED STIPULATIONS FOR THE US- AMERICAN MARKET

The content in this chapter is specialized for the US-American market.

a. Foreword/ Compliance

Operating this truck requires knowledge which can be acquired from this instruction handbook. This handbook must be kept available throughout the entire period of use of the industrial truck.

IT IS LAW; YOU MUST BE TRAINED AND CERTIFIED TO OPERATE THIS TRUCK! READ AND OBEY ALL WARNINGS AND INSTRUCTIONS IN THIS MANUAL AND ON THE TRUCK!

Only properly trained operators are allowed to operate a powered industrial truck. Your employer must train you and certify, that you are qualified to operate this truck (required by OSHA § 1910.178). The training must satisfy OSHA requirements and as minimum the topics mentioned in this handbook. Depending on the context in this operating manual, the user can refer to several people, including the owner of the truck, anyone who leases or borrows this truck, and the operator as defined in ASME B56.1. Please pay attention to the section in ASME B56.1 concerning the operator. In this standard, it is defined that the safe operation is the responsibility of the operator (ASME B56.1-2003, Part II, section 5.1.1). You and others can be seriously injured or even killed if you don't use this truck correctly. Before operating your truck, inspect your truck and ensure that it is in correct working order. This truck was designed and built to current industry and government standards. For more information see following:

- ASME B56.1 (American Society of Mechanical Engineers)
- OSHA §1910.178 (Occupational Safety and Health Act)
- UL 583 (Underwriters Laboratory)
- ANSI Z535.4 (American National Standards Institute)

⚠ DANGER This sign indicates hazard situations, if not avoided, will result in serious injury or death. The instructions or precautions to this message must be observed to avoid the potential risk of injury or death.

⚠ WARNING If not followed, warning indicates hazard situations which may lead to moderate injury. The instructions or precautions to this message must be observed to avoid the potential risk of injury or death.

⚠ CAUTION If not followed, caution indicated situations which may lead to minor injury. Instructions or precautions must be observed to avoid minor injury.

https://truckmanualshub.com/

b. Description warning labels (only US- market)

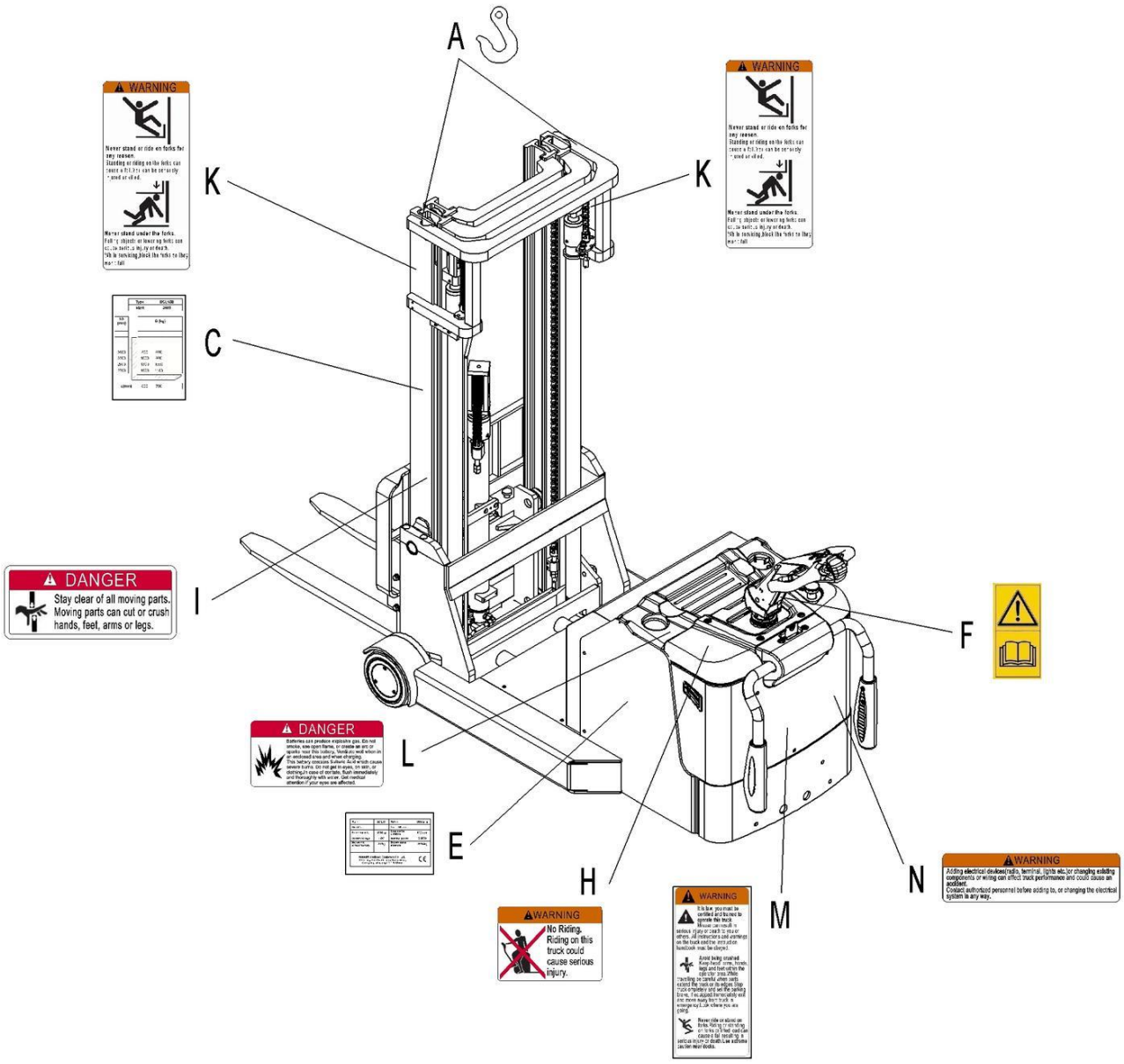

Fig. 18: Warning labels and safety devices (only USA)

A Crane hook label
C Residual lift capacity sticker
E Identification plate (ID-plate)
F Sticker to read and follow these instructions
H Sign danger not riding
I Sign danger being crushed
K Sign not under, on forks
L Sign danger battery
M Sign warning stay clear stop truck
N Sign warning electrical devices

The truck is equipped with an emergency button (13) which stops all lifting-, lowering-, driving- functions and engages the failsafe electromagnetic brake when it is pushed. The function is described in chapter 2c. Follow the instructions given on the decals. Replace the decals if they are damaged or missing.

https://truckmanualshub.com/

Sign read and follow this instruction (F)

Sign not under, on forks (K)

Sign danger battery (L)

Sign danger being crushed (I)

Sign warning stay clear stop truck (M)

Sign danger not riding (H)

Sign warning electrical devices (N)

https://truckmanualshub.com/

c. Technical data for US market

Drawing see fig.2

Table 7: Main technical data for standard version(US market)

Type sheet for industrial truck acc. to VDI 2198					
Distinguishing mark	1.2	Manufacturer`s type designation		PS12CB-C	PS15CB-C
	1.3	Drive		Battery	
	1.4	Operator type		Pedestrian	
	1.5	Load capacity / rated load	Q (lbs)	2640	3300
	1.6	Load center distance	C (in)	19.7	
	1.8	Load distance ,centre of drive axle to fork	X (in)	5.3	
	1.9	Wheelbase	Y(in)	55.6	61
Weight	2.1	Service weight	lbs	3975.4	4679.4
	2.2	Axle loading, laden front/rear	lbs	660/6118.2	770/7352.4
	2.3	Axle loading, unladen front/ rear	lbs	1854.6/2120.8	2142.8/2536.6
Tyres, Chassis	3.1	Tires		Polyurethane (PU)	
	3.2	Tire size, front	∅ x w (in)	∅9×2.95	
	3.3	Tire size, rear	∅ x w (in)	∅9×3.9	
	3.5	Wheels, number front/ rear(x=driven wheels)		1x/2	
	3.6	Tread, front	b10(in)	/	
Dimensions	4.1	Tilt of mast/fork carriage forward/backward	α /β(°)	1.5/3.5[1)]	
	4.2	Lowered mast height	h1 (in)	94.5	82.7
	4.3	Free Lift height	h2 (in)	/	59
	4.4	lift	h3 (in)	141.7	177.2
	4.5	Extended maximal height	h4 (in)	175.2	210.6
	4.9	Height of tiller in drive position min./max.	h14(in)	37/50.8	
	4.15	Height, lowered	h13(in)	1.6	
	4.19	Overall length	l1(in)	109.8	115.2
	4.20	Length to face of forks	l2(in)	72.4	77.8
	4.21	Overall width	b1(in)	42.9	
	4.22	Fork dimensions	s/ e/ l(in)	1.4/3.9/37.4	
	4.25	Width across forks	b5 (in)	8.7-29.9	
	4.32	Ground clearance, centre of wheelbase min./max.	m2(in)	2	
	4.33	Aisle width for pallets 1000x1200 crossways	Ast (in)	117.8	123
	4.34	Aisle width for pallets 800x1200 lengthwise	Ast (in))	121.1	126.4
	4.35	Turning radius	Wa (in)	68.4	73.7
Performance data	5.1	Travel speed, laden/ unladen	mph	3.2/3.7	3.2/3.7
	5.2	Lift speed, laden/ unladen	fpm	17.5/25.4	20.7/29.5
	5.3	Lowering speed, laden/ unladen	fpm	17.7/17.1	22.4/19.1
	5.8	Max. gradeability, laden/ unladen	%	4/15	4/12
	5.10	Service brake		Electromagnetic	

https://truckmanualshub.com/

Electric- motor	6.1	Drive motor rating S2 60min	hp	2.1	
	6.2	Lift motor rating at S3 10%	hp	2.95	4
	6.3	Battery acc. to DIN 43531/ 35/ 36 A, B, C, no		DIN	
	6.4	Battery voltage, nominal capacity K5	V/Ah	24/210	24/270[2)]
	6.5	Battery weight	lbs	477.4	633.6
	6.6	Energy consumption acc. to VDI cycle	kWh/h	0.76	0.8
Addi- tional data	8.1	Type of drive control		AC- Speed Control	
	8.4	Sound level at driver`s ear acc. to EN 12053	db(A)	<70	

1). Tilt-free configuration is available. 2).24V/350Ah is available.

Designation	Lowered mast height h1(mm)	Free Lift height h2(mm)	Lift height h3(mm)	Extended mast height h4(mm)	Lift+fork height h3+h13(mm)
One stage mast	86.5	—	63	96.5	65.4
Two stage mast	72.8	—	98.4	131.9	100.8
	82.7	—	118.1	151.6	120.5
	86.6	—	126	159.4	128.3
	94.5	—	141.7	175.2	144.1
	102.4	—	157.5	190.9	159.8
Three stage mast FFL (Full Free Lift)	70.9	47.2	141.7	175.2	144.1
	76.2	52.4	157.5	190.9	159.8
	80.1	56.3	169.3	202.8	171.7
	82.7	59.1	177.2	210.6	179.5

https://truckmanualshub.com/

12. DECLARATION OF CONFORMITY (valid, if sold within the EU)

[GB] CE Declaration of Conformity

The signatory hereby declares that the specified machine conforms to the EU Directive 2006/42/EC (Machine Directive) and 2014/30/EU (Electro-Magnetic Compatibility, EMC) including their amendments as translated into national legislation of the member countries. The signatory is individually authorized to compile the technical documents.

[D] EG-KONFORMITÄTSERKLÄRUNG

Der Unterzeichner bescheinigt hiermit, dass die im Einzelnen bezeichnete Maschine den Europäischen Richtlinien 2006/42/EG (Maschinenrichtlinie) und 2014/30/EU (Elektromagnetische Verträglichkeit - EMV) einschließlich deren Änderungen sowie dem entsprechenden Rechtserlaß zur Umsetzung der Richtlinien in nationales Recht entspricht. Der Unterzeichner ist bevollmächtigt, die technischen Unterlagen zusammenzustellen.

[E] DECLARACIóN DE CONFORMIDAD CE

El signatario certifico por medio de la presente que la máquina especificada cumple con las Normas Europeas 2006/42/CE (Normativa para maquinarias) y 2014/30/EU (Compatibilidad electromagnética), incluyendo sus respectivas odificaciones, así como con el decreto-ley para la adaptación de las normas al derecho nacional. El signatario dispone de una autorización individual que le permitecompilar la documentacióntécnica.

[F] DECLARATION DE CONFORMITE CE

Par la présente déclaration, les soussignés certifient que le machines spécifié ci-dessus est conforme à la loi et aux directives européennes 2006/42/CE (directive sur les machines) et 2014/30/EU (compatibilité électromagnétique - CEM), y compris aux modifications qui y sont apportées et à l'arrêté autorisant sa transposition en droit national. Chaquesignataireesthabilité à établirindividuellement la documentation technique.

[NL] EG-CONFORMITEITSVERKLARING

Ondergetekenden verklaren hierbij dat - volgens de nationale wetgeving van de Lidstaten - de hierboven vermelde opgegeven machina beantwoordt aan de bepalingen qua veiligheid bij machines (EG richtlijn 2006/42/EC) en electro-magnetische compatibilteit (EG richtlijn 2014/30/EU). Ondergetekenden zijn ieder individueel gemachtigd het technisch dossier samen te stellen.

[P] DECLARAÇÃO DE CONFORMIDADE CE

Pela presente, os signatários certificam que o máquina especificado está conforme às Directivas Europeias 2006/42/CE („Máquinas") e 2014/30/EU („Inocuidade Electromagnética - IEM"), incluindo as alterações das mesmas e o respectivo decreto-lei para a transposição em lei nacional. Cada um dos signatáriosestáautorizado a proceder à elaboração da documentaçãotécnica.

[I] DICHIARAZIONE DI CONFORMITÀ CE

I sottoscrittidichiaranocheilveicolo per trasportiinterniamacchinaspecificatosoddisfa le DirettiveEuropee 2006/42/EC (DirettivaMacchine) e 2014/30/EU (Compatibilitàelettromagnetica - EMV) comprese le relative modifiche, come pure ilrispettivodecretolegislativo per la conversionedelledirettive in dirittonazionale. I sottoscrittisonosingolarmenteautorizzatiallacreazionedelladocumentazionetecnica.

[BG] ЕВРОПЕЙСКА ОБЩНОСТ - ДЕКЛАРАЦИЯ ЗА СЪОТВЕТСТВИЕ

Подписаните удостоверяват с настоящето, че подробнооописанотомашина средствоотговаря на европейския норматив 2006/42/EG (норматив за машини) и на2014/30/EU (електро-магнетична съвместимост), включително с техните промени, както и на съответния указ за прилагане на нормативите в националното право. Подписаните при това са упълномощении поотделно да съставят техническата документация.

[CZ] EG - PROHLÁŠENÍ OSHODĚ

Nížepodepsaný tímtopotvrzuje, žepodrobný popisuvedené strojeodpovídáEvropskýmsměrnicím 2006/42/EC (směrniceprostroje) a 2014/30/EU (elektromagnetická interference - EMV) včetně jejichpozdějších úprav, jakož ipříslušnýmprávnímvýnosůmprouplatnění příslušné směrnicevrámcinárodníhopráva. Každý zpodepsanýchjsoujednotlivě zplnomocněnikvytvoření technickýchpodkladů.

[DK] EF-OVERENSSTEMMELSESERKLÆRING

Undertegnede attesterer hermed, at det specificerede maskine stemmer overens med de Europæiske Direktiver 2006/42/EU (maskindirektiv) og 2014/30/EU (elektromagnetisk kompatibilitet - EMC) samt med den modsvarende lovvedtagelse til implementering af direktiver i den nationale lovgivning. De undertegnede er hver for sig beføjet til at sammenstille de tekniske dokumenter.

[EST] EL vastavusavaldus

Allakirjutanud tõendavad käesolevaga, et üksikasjaliseltkirjeldatudtäpsustatud masin vastab Euroopa direktiividele 2006/42/EÜ (Direktiiv masinate kohta) ja 2014/30/EU (Elektromagnetiline sobivus - EMS) kaasa arvatud nende muudatused ja nendele vastavatele õigusmäärustele direktiivide muutmiseks siseriiklikuks õiguseks. Iga allakirjutanu üksikult on volitatud koostama tehnilist dokumentatsiooni.

[FIN] EU-YHDENMUKAISUUSSELOSTUS

Allekirjoittaneet todistavat täten, että kukin erikseen mainittu omalla voimanlähteellä varustettutehdaskone vastaa EU-direktiivien 2006/42/EC (koneenrakennusdirektiivi) ja 2014/30/EU (sähkömagneettinen yhteensopivuus – EMC) määräyksiä sekä niiden muutoksia ja niiden kansalliseen lainsäädäntöön soveltamista koskevaa oikeussääntöä. Jokaisella allekirjoittaneista on oikeus itsenäisesti laatia asiaankuuluvia teknisiä asiakirjoja.

[GR] ΔΗΛΩΣΗΣΥΜΜΟΡΦΩΣΗΣΕΟΚ

ΟιυπογράφοντεςβεβαιώνουνδιάτηςπαρούσηςότιτοσυγκεκριμένομηχάνημασυμμορφώνεταιπροςτηνΚοινοτικήΟδηγία 2006/42/ΕΚ («Μηχανήματα») και 2014/30/ΕU (ΗλεκτρομαγνητικήςΣυμβατότητας, ΗΜΣ), καθώςκαιοιτροποποιήσειςτους, όπωςμεταφράστηκεστηνεθνικήνομοθεσίατωνχωρώνμελών. Οιυπογράφοντεςείναισεκάθεπερίπτωσηεξουσιοδοτημένοιατομικάνακαταρτίσουντατεχνικάέγγραφα.

[H] EU KONFORMITÁSI NYILATKOZAT

Alulírottak ezennel igazolják, hogy a részletesen leírt a megadott gép megfelel a 2006/42/EC (Gép-Irányelv) és a 2014/30/EU (Elektromágneses összeférhetőség - EMV) Európai Irányelveknek, beleértve azok módosításait, valamint az irányelvek nemzeti jogba történő átültetésére irányuló megfelelő jogi rendelkezést. Továbbá az alulírottak mindegyike rendelkezik meghatalmazással arra nézve, hogy összeállíthatja a műszaki dokumentációt.

[LT] ES atitikimo deklaracija

Žemiau pasirašę asmenys patvirtina,kad atskirai aprašytasnurodyta mašina atitinka Europos Sąjungos direktyvas 2006/42/EB (Mašinų direktyva) ir 2014/30/EU (Elektromagnetinis suderinamumas – EMS) įskaitant jų pakeitimus, o taip pat ir atitinkamą teisės aktą dėl direktyvų įgyvendinimo nacionalinėje teisėje. Kiekvienas iš pasirašiusių asmenų turi teisę ruošti techninę dokumentaciją.

[LV] ES atbilstības deklarācija

Ar zemāk redzamajiem parakstiem tiek apliecināts, kanorādīts mašīna atbilstEiropas Savienības normatīvām 2006/42/EG (Mašīnu normatīvas) un 2014/30/EU (Elektromagnētiskā atbilstība – EMV), ieskaitot to izmaiņas, kā arī atbilstošos tiesiskos rīkojumus normatīvu pielāgošanai

https://truckmanualshub.com/

nacionālajai likumdošanai. Parakstu īpašnieki ir atsevišķi pilnvaroti sastādīt tehniskās dokumentācijas.

[N] EU-KONFORMITETSERKLÆRING

Undertegnede bekrefter hermed at de enkelte betegnede maskin med kraftdrift tilsvarer de europeiske retningslinjene 2006/42/EC (maskinretningslinje) og 2014/30/EU (elektromagnetisk fordraglighet - EMV) inklusiv disses endringer og den tilsvarende rettsforordning til omsetning av nasjonal rett. Hver undertegnede er fullmektig til å sette sammen de tekniske dokumentene.

[PL] DEKLARACJA ZGODNOŚCI WE

Niżej podpisani deklarują, że poniżej opisana maszyna spełnia wymagania określone w dyrektywach Europejskich 2006/42/EC (Dyrektywa Maszynowa) i 2014/30/EU (Kompatybilności elektromagnetycznej - EMC) wraz z ich późniejszymi zmianami oraz odpowiednimi rozporządzeniami mającymi na celu przeniesienie tych dyrektyw do prawa krajów członkowskich. Sygnatariusz jest indywidualnieupoważniony do zestawianiadokumentacjitechnicznej.

[RO] DECLARAŢIE DE CONFORMITATE CE

Subsemnaţiiadeverescprinprezentacăvehiculul despecificatmaşinădescris individual corespundedirectiveloreuropene 2006/42/CE (Directivaprivindmaşinile) şi 2014/30/EU (Compatibilitateaelectromagnetică - CEM) inclusivmodificărilorlor precum şiactuluilegislativcorespunzătorprentrutranspunereadirectivelorîndreptnaţional. Subsemnaţii sunt fiecareînparteîmputerniciţisăîntocmeascădocumentaţiatehnică.

[RUS] Декларация соответствия стандартам ЕС

Настоящим лица, подписавшие документ, удостоверяют, что машина с указанной спецификацией соответствует европейским стандартам 2006/42/EG (Транспортная директива) и 2014/30/EU (Электромагнитная совместимость - EMC), включая изменения в них, а также соответствующим национальным стандартам и нормам. Каждое по отдельности лицо, подписавшее документ, имеет полномочия для составления технической документации.

[S] EG-KONFORMITETSFÖRKLARING

Undertecknarna intygar härmed att det i detalj betecknade maskin uppfyller de Europeiska direktiven 2006/42/EG (Maskindirektiv) och 2014/30/EU (Elektromagnetisk tålighet - EMV), inklusive ändringarna i detta och den motsvarande rättsförordningen för att omsätta direktiven i nationell rätt. Undertecknarna har var för sig fullmakt att sammanställa den tekniska dokumentationen.

[SK] vyhlásenie o zhode

Dolu podpísaní týmto potvrdzujeme, že podrobný popis uvedené stroje Zodpovedá Európskym smerniciam 2006/42/EC (ernica pre stroje) a 2014/30/EU (elektromagnetická tolerancia – EMV) vrátane jeho neskorších úprav, rovnako zodpovedá aj príslušným právnym nariadeniam na uplatnenie smerníc v rámci národného práva. Každý z podpísaných je jednotlivo splnomocnený na vytvorenie technických podkladov.

[SLO] EU IZJAVA O SKLADNOSTI

Podpisani s tem potrjujemo, da posamično označeno določeno stroj vozilo odgovarja Evropski direktivi 2006/42/EC (Direktiva o strojih) in 2014/30/EU (Elektromagnetna skladnost - EMV) vključno z njihovimi spremembami ter ustrezno pravno uredbo o prevzemu smernic v nacionalno pravo. Podpisniki so vsakokrat posamezno pooblaščeni za izdajanje tehnične dokumentacije.

[TR] AB Uygunluk Açıklaması

İmza sahibi şahıslar, ayrıntıları belirtilen makine aracının, 2006/42/EC (Makine Yönergesi) ve 2014/30/EU (Elektromanyetik Uyumluluk – EMC) no'lu Avrupa Yönergelerine ve bunların değişiklik sonucu oluşan metinlerine ve yönergelerin milli hukuk hükümlerine dönüştürülmesine dair ilgili hukuk kararnamesine uygun olduğunu tasdik ederler. İmza sahibi şahıslar teknik dosyaları bir araya getirmek için münferiden vekil tayin edildi.

(1) Type/ Typ/ Tipo/ Modello/ Tyyppi/ Tipo / ΤΥΠΟΣ/ Típus/ Tip/ Тип/ Tips/ Tipas/ Tüüp:
(2) Serial No./ Serien-Nr./ N°. de série/ Serienummer/ Nº de serie/ Numero di serie/ Serienr./ Sarjanro/ αυξάνωναριθμός/ Seriové číslo/ Sériaszám/ Nr.Seryjny/ Serijska številka/ Výrobné číslo/ Серийныйномер/ Seri No./ Seerianr./ Sērijas Nr./ Serijos numeris:
(3) Year of constr./ Baujahr/ Année de constr./ Bouwjaar/ Año de constr./ Anno di costruzione/ Produktionsår/ Byggeår/ Tillverkningsår/ Valmistusvuosi / Ano de fabrico / έτοςκατασκευής/ Rokvýroby/ Gyártásév/ Rokprodukcji / Letnik / Годизготовления / Üretimyılı / Väljalaskeaasta / Izgatavošanas gads / Gamybosmetai
(4) Manufacturer or his authorized representative in Community/ Herstelleroder in der Gemeinschaft ansässigerVertreter/ Fabricant ou son mandataireétabli dans la Communauté/ Fabrikant of zijn in de Gemeenschapgevestigdegemachtigde/ Fabricante o representanteestablecidoen la Comunidad/ ConstrutorouRepresentanteestabelecidonaComunidade/ Costruttoreoppureilsuorappresentantenella Comunità/ Fabrikant ellerdennesiFællesskabetetableredebefuldmægtigede/ Produsenteller agent innenfelleskapet/ Tillverkareeller representant inom EU/ Valmistaja tai yhteisömaassaolevaedustaja / V˘robcenebojehozastoupení/ Gyártó / producent albojegoprzedstawiciel w EG (WspólnotaEuropejska)/ Καηαζθεπαζηήο ή όκηινοηνπηθώλ αληηπξνζώπσλ/ Üreticiya da BölgedekiYetkiliTemsilci/ Proizvajalecalipooblaščenizastopnik s sedežem v EU/ Výrobcaalebozástupca so stálymbydliskom v EÚ / Изготовительилиегопредставитель, зарегистрированный в стране Содружества/ Tootjavõiorganisatsioonispaiknevesindaja/ Ražotājsvaivietējaisuzņēmumapārstāvis / Gamintojasarbašalyjereziduojantisatstovas:
(5) Date/ Datum/ Data/ Fecha/ datum/ Dato/ päiväys/ Kuupäev/ Datums/дата/ Dátum/ dátum/ tarih/ ημερομηνία
(6) Authorised signatory/ ImAuftrag/ pour ordre/ Incaricato/ Por orden de/ por procuração/ op last van/ påvegneaf/ påuppdrag/ Etteroppdrag/ psta./ Ülesandel / pavedus / v.i. / Попоручению / megbízásából /длъжностнолице / z pověření / z poverenia / po nalogu / napolecenie / din sarcina / adına / θαη' ελληνή

(1) Type: **XX XX–Self propelled industrial truck**
(2) Serial No: **XXXXXXXX**
(3) Year of constr.: **YYYY**
(4) Manufacturer or his authorized representative in Community:
Company name/ Street / Postal code Town/ Country
(5) Date: **YYYY.MM.DD**
(6) Authorized signatory: **Mr. Sample**

Sample
If you can read this text,
your decleration is not complete.
In this case please ask for a copy