https://truckmanualshub.com/

Spare Parts List

Linde Material Handling

Linde Fork Lift Truck
H12/16/18/20 - 03

with Combustion Engine
from series

350 804 94 11 07.08

https://truckmanualshub.com/

Notes on ordering spare parts

Spare parts should always be ordered from your authorized LINDE Dealer only.

In the interests of avoiding errors in delivery the following particulars should be stated in all orders for parts

a) Type designation, manufacturers serial number and year of manufacture of lift truck

b) Also state manufacturers serial number of mast, hydrostatic transmission, steering axle and IC engine when ordering parts for these items.

c) LINDE part number as listed in the Part No. column of our spare parts catalogue. See also the notes on availability order quantities etc listed as an index number in the column headed Internal

- No index number	Parts available on short delivery
1 Packaged quantities	Small parts and sealing materials available on short delivery but only in certain minimum packaged quantities.
2 Restricted availability	Parts not in stock, can only be procured after customer's order has been received. Delivery may be delayed
3 Parts being phased out	Parts in the process of being replaced by new parts due to technical modifications, no longer available when current stocks have been depleted. See pertinent notes on modification
4 not available individually	Parts not available individually due to assembly reasons in production

This catalogue is submitted for confidential use subject to the condition that it shall remain the exclusive property of Linde Material Handling GmbH and shall be returned to LINDE on demand. No copies or reproductions shall be made unless the prior express permission to do so has been obtained from Linde Material Handling GmbH. Illustrations contained herein are not binding in respect of actual design and construction. We reserve the right to make modifications and alterations in the interests of technical progress

https://truckmanualshub.com/

Register 00 : ENGINE

100-10 Base Engine Without DistribuTor, Intake Manifold, Exhaust Manifold And Alternator ADG
100-10 Base engine ADF,BEF,CBSA
103-05 Cylinder Block With Pistons Oil Sump ADG
103-05 Cylinder Block With Pistons Oil Sump ADF
103-35 Cylinder Head Cylinder Head Cover ADG
103-35 Cylinder Head Cylinder Head Cover ADF
103-55 Ventilation For Cylinder Head Cover ADF
103-70 Ventilation For Cylinder Block ADG,BXT,BEQ,BEU,BJC
105-05 Crankshaft Conrod Bearings ADG
105-10 Crankshaft Conrod Bearings ADF
107-00 Piston Piston Ring ADG,BXT,BEQ,BEU,BJC
107-00 Piston Piston Ring ADF
109-05 Camshaft, Valves ADG
109-15 Camshaft, Valves ADF
109-30 Toothed Belt Toothed Belt Cover ADG
109-45 Toothed Belt Toothed Belt Cover ADF
109-95 Repair Kit For Toothed Belt With Tensioning Roller ADF,BEF,CBSA
115-05 Oil Filter Oil filter bracket ADG
115-10 Oil Pump ADF
115-30 Oil Filter Oil filter bracket ADF
115-25 Oil Pump ADG
121-05 Water Pump ADG
121-10 Water Pump ADF
121-15 Flange Water Hoses ADG
121-50 Water Hoses And Pipes Radiator Flange ADF
121-51 Water Hoses And Pipes Radiator Flange ADF
127-05 Fuel Pump ADF
129-05 Intake Connection ADG
129-55 Intake System ADF
129-65 Intake Connection ADF
130-05 Injection Pump ADG
130-20 Set Of Gaskets For Injection Pump ADG
130-30 Injector Pressure Pipes ADG
903-00 Alternator And Single Parts ADG
903-10 Alternator And Single Parts ADF
903-35 Connecting And Mounting Parts For Alternator Ribbed V-Belt ADG
903-35 Connecting And Mounting Parts For Alternator ADF
903-40 Connecting And Mounting Parts For Alternator ADG
903-45 Connecting And Mounting Parts For Alternator ADF
905-15 Ignition Coil Ignition Lead ADF
905-30 Ignition Distributor ADF
911-15 Starter ADG,BEQ,BEU
911-15 Starter ADF,BEF
972-00 Glow Plug Wiring Harness For Alternator ADG,BXT,BEQ,BEU,BJC
972-05 Wiring Harness For Alternator ADF

https://truckmanualshub.com/

Index

Register 01 : POWER UNIT: ENGINE/MOTOR

01 OIL FILTER FOR ENGINE
02 AIR SUPPLY FOR ENGINE AND AIR FILTER
03 ENGINE SUSPENSION
04 COOLING SYSTEM
05 FUEL SYSTEM DIESEL ENGINE
06 WATER SEPARATOR DIESEL ENGINE C1X350N00053 |=>
07 EXHAUST SYSTEM
08 LPG SYSTEM
09 LPG SYSTEM (CATALYZER GOVERNED)
10 LPG TANK
11 GUARD DUST - FILTER PRELIMINARY INSTALLAT.
12 PARTICLE FILTER SYSTEM =>I 08/2002
13 PARTICLE FILTER SYSTEM 09/2002 |=>
14 PARTICLE FILTER

Register 02 : DRIVE TRANSMISSION

01 center piece AH20-01
02 axle driven gear GR2H-01
03 service unit AH20-01
04 Power unit and housing
05 Port plate housing and valves
06 Remote control E2 (4-16 bar)
07 Service units HPV55-02

Register 03 : CHASSIS, BODYWORK AND FITTINGS

01 CHASSIS,OVERHEAD GUARD AND COUNTERWEIGHT
02 HOOD AND COVERINGS
03 DAMPING MATS
04 DRIVER'S SEAT
05 DRIVER'S SEAT
06 DRIVER'S SEAT
07 DRIVER`S SEAT VERSION CONTAINER
08 DRIVER'S CAB
09 HEATER =>I 05/2002
10 HEATER 06/2002 I=>

Register 04 : STEERING AND WHEELS

01 HYDROSTATIC STEERING WITH LINES
02 STEERING AXLE
03 WHEELS AND TYRES

https://truckmanualshub.com/

Register 05 : CONTROLS

01 SPEED CONTROL DIESEL ENGINE
02 SPEED CONTROL LP GAS VERSION
03 TRAVEL AND BRAKE OPERATION
04 ACTUATOR OF PILOT VALVE

Register 06 : ELECTRIC EQUIPMENT

01 ELECTRIC ARMATURES AND BATTERY
02 LINDE FORKLIFT DATA MANAGEMENT (LFM)
03 MAIN CABLE LOOM DIESEL VERSION
04 MAIN CABLE LOOM LPG VERSION
05 MAIN CABLE LOOM LPG VERSION CATALYZER GOVERNED
06 SET CABLE
07 SET CABLE - LFM
08 SPOT LIGHT 11/2004 |=>
09 TRUCK LIGHTING, WARNING BLINKER SYSTEM AND DANGER SIGNAL
10 FLASH LIGHT AND WARNING LIGHTS
11 VEHICLE LIGHTING VERSION JAPAN
12 CABLE TREES FOR LIGHTING
13 CABLE LOOMS FOR LIGHTING VERSION JAPAN
14 HARNES FOR PARTICLE FILTER =>I H2X350N03290
14A HARNES FOR PARTICLE FILTER H2X350N03291 |=>
15 HARNESS FOR FLASH LIGHTS / CONSOLE / LIGHT WARNING
16 HARNESS LPG ULTRASONIC VOLUME INDICATOR

Register 07 : HYDRAULIC UNIT

01 CONTROL VALVE AND LINES
02 OIL TANK WITH LINES AND ACCESSORIES
03 OIL FILTER AND LINES FOR HYDRAULIC TRAVEL SYSTEM
04 TILT CYLINDER

Register 08 : MAST ASSEMBLY AND AUXILIARY HYDRAULIC SE

01 STANDARD MAST TYPE 180, FORK CARRIAGE AND FORK ARMS
02 DUPLEX MAST TYPE 180
03 TRIPLEX MAST TYPE 180
04 LIFT CYLINDER FOR MAST LIFT TYPE 180
05 AUXILIARY HYDRAULICS FOR STANDARD MAST TYPE 180
06 AUXILIARY HYDRAULICS FOR DUPLEX MAST TYPE 180
07 AUXILIARY HYDRAULICS FOR TIPLEX MAST TYPE 180
08 SIDESHIFTER FOR STANDARD MAST TYPE 180 =>| H2X180L08640
08A SIDESHIFTER FOR STANDARD MAST TYPE 180 H2X180L08641 |=>
09 SIDESHIFTER FOR DUPLEX MAST TYPE 180 =>| H2X180L09343

https://truckmanualshub.com/

09A SIDESHIFTER FOR DUPLEX MAST TYPE 180 H2X180L09344 |=>
10 SIDESHIFTER FOR TRIPLEX MAST TYPE 180 =>| H2X180L07369
10A SIDESHIFTER FOR TRIPLEX MAST TYPE 180 H2X180L07370 |=>

Register 09 : SPECIAL EQUIPMENT

01 HIGHWAY EQUIPMENT
02 LOADGUARD FOR MAST TYPE 180

Register 10 : MISCELLANEOUS

01 PLATES =>| 02/2000
01A PLATES 03/2000 |=>
02 OPERATING MATERIAL
03 BAG FOR TECHNICAL DOCUMENTATION

https://truckmanualshub.com/

Key to part numbers

Part-No.	Page	Part-No.	Page	Part-No.	Page	Part-No.	Page	Part-No.	Page
000 891 60 01	06/08 /02	000 903 10 38	07/01 /02	000 907 06 00	02/02 /01	000 912 20 04	04/02 /02	000 914 03 34	02/05 /01
000 901 01 65	01/10 /03	000 903 10 51	01/03 /01	000 907 06 04	02/01 /02	000 912 21 02	08/02 /02	000 914 03 35	02/05 /01
000 901 01 93	08/02 /04	000 903 10 52	01/03 /01	000 907 11 27	04/02 /02		08/03 /02	000 914 03 36	02/05 /01
	08/03 /06	000 903 10 57	07/02 /03	000 907 30 01	03/02 /01	000 912 22 03	08/01 /03	000 914 03 37	02/05 /01
000 901 06 00	02/01 /01	000 903 10 86	07/02 /02	000 907 33 06	01/04 /01	000 912 34 39	04/01 /02	000 914 03 38	02/05 /01
000 901 11 04	06/01 /02	000 903 17 03	03/04 /01	000 907 33 14	05/04 /03	000 912 35 63	05/04 /02	000 914 03 39	02/05 /01
000 901 15 00	01/10 /03		03/07 /01	000 907 33 17	03/02 /01	000 912 35 64	05/04 /03	000 914 03 40	02/05 /01
000 901 15 21	01/03 /01	000 903 30 02	02/01 /02		05/03 /04	000 912 40 47	03/02 /01	000 914 08 23	01/12 /04
000 901 90 12	01/08 /02	000 903 31 95	02/06 /01	000 907 33 18	05/04 /03	000 912 85 13	05/03 /04		01/13 /03
	01/09 /02	000 903 48 03	01/03 /01	000 907 33 22	03/10 /01	000 913 12 04	05/03 /01	000 914 08 63	08/01 /02
000 901 90 13	01/08 /03	000 903 68 90	07/03 /02	000 907 50 09	02/01 /02	000 914 00 00	08/05 /01	000 914 09 07	02/02 /02
	01/09 /03	000 903 75 11	02/06 /01		08/04 /21		08/06 /01	000 914 10 44	05/03 /05
000 901 90 18	01/08 /02	000 904 18 02	07/04 /01		08/04 /21		08/07 /01	000 914 11 28	02/04 /01
	01/09 /02	000 904 60 09	01/12 /03	000 907 50 11	08/04 /21	000 914 03 20	02/05 /01	000 914 12 16	03/08 /04
000 901 90 64	01/08 /03		01/13 /02	000 908 02 61	02/04 /01	000 914 03 21	02/05 /01	000 914 12 35	01/03 /03
	01/09 /03		01/13 /03	000 908 10 01	01/08 /02	000 914 03 22	02/05 /01	000 914 13 03	01/12 /03
000 902 01 80	05/02 /01	000 904 60 51	03/08 /05		01/09 /02	000 914 03 23	02/05 /01		01/13 /01
000 902 12 01	04/01 /02	000 905 01 22	07/03 /02	000 908 22 01	09/01 /01	000 914 03 24	02/05 /01	000 914 13 11	03/01 /02
	04/01 /02	000 905 02 12	02/02 /01	000 908 23 06	09/01 /01	000 914 03 25	02/05 /01	000 914 14 13	04/02 /01
000 902 50 65	05/01 /02	000 905 04 02	01/03 /02	000 910 05 05	04/02 /01	000 914 03 26	02/05 /01	000 914 14 39	04/02 /01
	05/02 /01	000 905 30 00	01/10 /03	000 910 10 15	04/03 /02	000 914 03 27	02/05 /01	000 914 16 21	01/12 /03
000 902 52 17	05/01 /01	000 905 90 00	06/03 /02	000 912 10 68	01/03 /02	000 914 03 28	02/05 /01		01/12 /03
000 903 02 09	07/01 /03		06/04 /03	000 912 11 22	08/01 /02	000 914 03 29	02/05 /01		01/13 /01
000 903 02 19	08/01 /04		06/05 /02	000 912 11 42	05/04 /02	000 914 03 30	02/05 /01		01/13 /03
000 903 10 04	07/01 /01	000 906 35 06	01/03 /01	000 912 11 45	02/01 /02	000 914 03 31	02/05 /01	000 914 16 26	01/03 /03
	07/03 /02		01/03 /02	000 912 12 21	03/01 /01	000 914 03 32	02/05 /01	000 914 17 28	01/03 /02
000 903 10 12	07/03 /01	000 907 01 14	08/04 /04	000 912 15 28	05/04 /02	000 914 03 33	02/05 /01	000 914 18 02	02/05 /02

Refer to respective page of Spare Parts List for every part wanted

* = innovation

https://truckmanualshub.com/

Key to part numbers

Part-No.	Page	Part-No.	Page	Part-No.	Page	Part-No.	Page	Part-No.	Page
000 914 19 04	04/02 /01	000 914 61 46	02/04 /01	000 916 06 09	05/01 /02	000 917 40 19	04/02 /01	000 918 63 13	05/03 /02
000 914 20 21	03/01 /01	000 914 61 47	02/04 /01		05/02 /01	000 918 00 17	03/08 /04	000 918 64 64	08/05 /03
000 914 23 02	08/01 /02	000 914 61 48	02/04 /01	000 916 07 11	03/02 /04		03/08 /04	000 918 71 02	01/04 /03
000 914 23 07	08/01 /02	000 914 75 26	08/04 /21	000 916 09 00	05/04 /01	000 918 00 42	03/08 /04	000 918 71 11	08/05 /03
000 914 24 01	02/01 /02	000 914 75 28	08/04 /21	000 916 09 08	01/10 /03	000 918 00 91	03/02 /03	000 918 71 22	08/05 /03
000 914 24 09	02/01 /02	000 914 76 46	03/08 /01	000 916 09 23	08/09 /01	000 918 12 15	01/04 /03	000 918 72 03	01/04 /03
000 914 28 11	03/01 /01	000 914 76 60	03/09 /01		08/09A /02	000 918 25 00	01/12 /03	000 918 73 18	03/01 /02
000 914 30 31	08/01 /02	000 915 18 25	08/02 /02		08/10 /01		06/01 /02		03/01 /02
	08/02 /01		08/03 /02		08/10A /02		06/01 /02	000 918 74 17	05/04 /01
	08/03 /01	000 915 60 11	02/02 /01	000 916 10 80	03/08 /04	000 918 25 40	05/04 /01	000 918 74 94	08/09A /02
000 914 33 09	04/02 /01	000 915 60 12	02/02 /01	000 916 11 33	08/09 /02	000 918 25 43	01/12 /03		08/10A /02
000 914 44 04	02/01 /01	000 915 60 13	02/02 /01		08/09A /02	000 918 46 00	01/04 /02	000 918 95 01	03/04 /02
000 914 58 05	08/01 /02	000 915 60 14	02/02 /01		08/10 /02	000 918 46 01	01/05 /01	000 921 12 35	05/03 /05
	08/02 /01	000 915 60 15	02/02 /01		08/10A /02	000 918 46 22	01/04 /02	000 921 20 27	05/03 /01
	08/03 /02	000 915 60 16	02/02 /01	000 916 12 47	05/04 /02	000 918 50 08	05/03 /05	000 921 28 27	02/05 /02
000 914 58 06	08/01 /02	000 915 60 17	02/02 /01	000 916 14 06	05/04 /02	000 918 50 17	06/01 /04	000 921 32 43	03/01 /01
	08/02 /01	000 915 60 18	02/02 /01	000 916 17 31	01/03 /02	000 918 52 06	09/01 /01	000 921 40 01	02/01 /02
	08/03 /02	000 915 60 19	02/02 /01	000 916 17 32	07/02 /03	000 918 53 14	03/02 /03	000 921 90 04	01/10 /03
000 914 58 07	08/01 /02	000 915 60 20	02/02 /01	000 916 19 25	07/02 /03	000 918 53 45	08/05 /03	000 921 90 36	08/04 /21
	08/02 /01	000 915 60 21	02/02 /01	000 916 50 00	01/10 /01		08/05 /03		08/04 /21
	08/03 /02	000 915 60 25	02/02 /01	000 916 50 02	01/10 /03		08/06 /03	000 921 90 37	08/04 /21
000 914 58 10	03/07 /01	000 915 60 26	02/02 /01	000 916 50 57	05/04 /02		08/07 /05	000 921 91 51	08/01 /05
000 914 61 41	02/04 /01	000 915 60 27	02/02 /01	000 916 88 02	01/01 /01	000 918 54 04	01/04 /02	000 921 91 68	03/08 /04
000 914 61 42	02/04 /01	000 915 60 28	02/02 /01	000 916 96 02	03/09 /01	000 918 56 06	04/01 /03	000 921 92 42	02/01 /01
000 914 61 43	02/04 /01	000 915 90 16	08/04 /04	000 917 09 03	08/09A /02	000 918 56 21	01/12 /01	000 922 17 02	05/03 /02
000 914 61 44	02/04 /01	000 916 05 05	05/01 /01		08/10A /02		01/13 /01	000 922 46 44	03/05 /01
000 914 61 45	02/04 /01		05/02 /01	000 917 14 06	06/01 /02	000 918 58 03	04/02 /03	000 922 46 45	03/05 /01

Refer to respective page of Spare Parts List for every part wanted

* = innovation

https://truckmanualshub.com/

Key to part numbers

Part-No.	Page	Part-No.	Page	Part-No.	Page	Part-No.	Page	Part-No.	Page
000 922 46 61	03/04 /01		08/08A /01	000 930 05 10	03/02 /01		05/02 /01	000 937 01 55	07/02 /01
000 922 51 44	09/01 /01		08/09 /01	000 931 01 00	03/08 /02	000 934 16 02	03/08 /03	000 937 02 34	01/10 /02
000 922 51 48	05/03 /02		08/09A /01	000 931 01 03	03/08 /03	000 934 19 02	05/01 /01	000 937 25 02	06/01 /04
000 922 70 07	08/02 /03		08/10 /01	000 931 01 22	03/08 /02		05/02 /01	000 938 01 02	10/01 /02
	08/03 /05		08/10A /01	000 931 05 07	06/01 /02	000 934 25 03	03/02 /01		10/01A /01
000 922 70 14	08/02 /04	000 924 95 33	08/01 /02	000 931 08 01	03/02 /01	000 934 25 13	05/04 /02	000 938 01 19	10/01A /02
	08/03 /06		08/02 /01	000 931 10 10	03/08 /03	000 935 03 19	03/10 /01	000 938 01 20	10/01A /02
000 923 01 53	05/04 /02		08/03 /02	000 931 10 11	03/08 /03	000 935 03 20	03/10 /01	000 938 01 21	10/01A /02
000 923 40 38	02/04 /01	000 924 95 34	08/01 /02	000 931 10 13	03/08 /03	000 935 06 40	05/03 /04	000 938 01 22	10/01A /02
000 924 50 02	01/04 /01		08/02 /01	000 931 20 06	05/04 /03	000 935 08 01	03/09 /01	000 938 01 23	10/01A /02
000 924 50 03	01/04 /01		08/03 /02	000 931 20 08	03/01 /01	000 935 08 02	03/09 /01	000 938 01 24	10/01A /03
000 924 68 06	02/04 /01	000 924 95 35	08/01 /02	000 931 30 47	08/07 /03	000 936 01 06	03/08 /04	000 938 01 47	10/01A /02
000 924 69 06	02/02 /01		08/02 /01	000 931 39 00	01/06 /01	000 936 01 07	03/08 /04	000 938 01 48	10/01A /02
000 924 70 43	03/04 /01		08/03 /02		06/01 /05	000 936 01 08	03/08 /04	000 938 05 97	10/01A /02
000 924 73 15	04/02 /01	000 924 96 02	08/01 /02	000 931 40 04	03/09 /02	000 936 01 09	03/08 /04		10/01A /03
000 924 73 18	04/02 /01		08/02 /01		03/10 /01	000 936 01 60	03/08 /02	000 938 06 22	10/01A /03
000 924 80 12	02/01 /02		08/03 /01	000 931 40 20	01/10 /01		03/08 /06	000 938 06 23	10/01A /02
000 924 80 41	05/03 /01	000 924 96 06	07/04 /01	000 931 49 08	04/01 /03	000 936 01 61	03/08 /02		10/01A /03
000 924 85 27	08/02 /02	000 925 10 07	02/01 /02	000 931 72 39	09/01 /02		03/08 /06	000 938 06 24	10/01A /02
	08/03 /02	000 926 50 02	01/03 /01	000 931 73 07	09/01 /01	000 936 01 65	03/10 /01	000 938 06 25	10/01A /03
000 924 94 52	08/08 /01	000 928 03 24	02/02 /01	000 931 73 15	01/10 /01	000 936 22 00	03/02 /03	000 938 06 26	10/01A /02
	08/08A /01	000 928 03 26	04/02 /01	000 932 15 00	03/09 /01	000 936 26 16	03/02 /03	000 938 06 27	10/01A /03
	08/09 /01	000 928 03 67	02/04 /01	000 932 15 03	03/10 /01	000 937 01 09	09/01 /01	000 938 06 28	10/01A /02
	08/09A /01	000 928 18 03	05/03 /05	000 932 15 04	03/10 /01	000 937 01 14	01/05 /01	000 938 06 30	10/01 /01
	08/10 /01	000 930 01 13	01/10 /02	000 932 15 05	03/10 /01		07/02 /01		10/01A /03
	08/10A /01	000 930 01 28	01/05 /01	000 934 13 01	05/04 /01	000 937 01 22	01/12 /01	000 938 06 32	10/01A /02
000 924 94 85	08/08 /01		07/02 /01	000 934 15 03	05/01 /01		01/13 /01		10/01A /03

Refer to respective page of Spare Parts List for every part wanted

* = innovation

https://truckmanualshub.com/

Key to part numbers

Part-No.	Page	Part-No.	Page	Part-No.	Page	Part-No.	Page	Part-No.	Page
000 938 06 34	10/01 /02	000 938 16 25	10/01 /01		10/01A /01	000 944 09 01	01/08 /03	000 946 07 62	06/01 /01
	10/01A /03		10/01A /01	000 938 22 93	10/01 /01		01/09 /03	000 946 07 67	06/01 /01
000 938 06 36	10/01 /02	000 938 18 12	10/01 /02		10/01A /01	000 944 13 57	01/10 /01	000 946 07 76	06/01 /01
	10/01A /03		10/01A /01	000 938 26 01	03/10 /01	000 944 13 63	02/05 /02	000 950 17 10	01/11 /01
000 938 06 61	10/01A /03	000 938 18 43	10/01 /01	000 938 31 05	10/01A /02	000 944 14 01	07/01 /01	000 950 17 14	01/14 /02
000 938 06 62	10/01A /02		10/01A /01	000 938 35 00	06/09 /01	000 944 15 06	01/10 /01	000 950 22 01	08/06 /02
	10/01A /03	000 938 18 60	10/01 /02		06/11 /02	000 944 23 29	08/02 /02		08/07 /04
000 938 06 63	10/01A /02		10/01A /02	000 938 35 01	06/09 /01		08/03 /02		08/07 /05
000 938 06 65	10/01 /01	000 938 18 61	10/01 /02		06/11 /03	000 944 23 38	07/01 /01	000 950 22 03	01/05 /02
	10/01A /03		10/01A /02	000 938 35 02	06/08 /02	000 944 23 48	08/01 /03		07/02 /03
000 938 07 58	10/01A /03	000 938 18 62	10/01 /02	000 938 35 07	01/12 /03		08/02 /03	000 950 22 11	06/16 /01
000 938 09 01	01/12 /03	000 938 18 67	10/01 /01		01/13 /02		08/03 /03	000 950 22 16	06/03 /03
000 938 09 29	10/01 /02		10/01A /01	000 938 35 18	01/06 /01	000 944 24 02	01/14 /01		06/04 /03
	10/01A /02	000 938 18 71	10/01 /01	000 938 35 39	01/13 /03	000 944 28 94	07/01 /01		06/04 /03
000 938 09 70	10/01A /03		10/01A /01		01/13 /03	000 944 28 95	07/01 /01	000 950 22 18	01/05 /02
000 938 09 71	10/01A /03	000 938 18 75	10/01 /01	000 938 35 47	01/12 /03	000 944 29 88	07/01 /01		06/04 /03
000 938 09 77	10/01A /03	000 938 18 98	03/09 /01		01/13 /02	000 944 29 89	07/01 /01		06/12 /02
000 938 09 83	10/01A /03	000 938 19 01	10/01 /01		01/13 /03	000 944 30 01	02/05 /03	000 950 22 28	06/04 /03
000 938 09 95	10/01A /02		10/01A /02	000 938 35 48	03/08 /02	000 944 30 02	02/05 /03	000 950 22 32	06/04 /03
000 938 13 85	10/01 /01	000 938 19 88	01/03 /01	000 938 35 49	03/08 /02	000 944 40 11	03/10 /01	000 950 22 33	06/04 /03
	10/01A /01	000 938 20 37	10/01 /01	000 940 80 27	10/02 /01	000 944 88 94	07/01 /01		06/06 /02
000 938 13 92	10/01 /01		10/01A /01	000 940 80 28	10/02 /01	000 944 88 95	07/01 /01		06/07 /02
	10/01A /01	000 938 21 69	10/01 /01	000 941 97 72	04/02 /02	000 944 89 88	07/01 /01	000 950 22 34	06/04 /03
000 938 13 94	10/01 /01	000 938 21 89	04/02 /01	000 942 27 03	07/02 /01	000 944 89 89	07/01 /01	000 950 22 35	01/05 /02
000 938 14 11	10/01 /02	000 938 22 59	10/01 /01	000 943 10 01	06/01 /02	000 945 01 12	03/09 /01		06/03 /03
000 938 16 06	10/01 /01		10/01A /01	000 944 01 11	01/14 /01	000 945 10 06	07/02 /02		06/04 /03
	10/01A /01	000 938 22 65	10/01 /01	000 944 02 11	07/01 /01	000 946 07 59	06/01 /01		06/05 /03

Refer to respective page of Spare Parts List for every part wanted

* = innovation

https://truckmanualshub.com/

Key to part numbers

Part-No.	Page	Part-No.	Page	Part-No.	Page	Part-No.	Page	Part-No.	Page
000 950 22 36	01/04 /03	000 950 97 08	08/05 /01	000 951 20 90	07/02 /02	000 951 55 15	01/04 /02	000 953 01 45	03/01 /02
	07/03 /02	000 950 97 09	08/05 /01	000 951 20 92	01/14 /01	000 951 64 04	01/10 /04	000 954 12 09	01/05 /02
000 950 22 40	01/05 /02	000 950 97 10	08/05 /01	000 951 21 08	07/02 /02	000 951 72 02	03/09 /01	000 954 13 02	01/03 /01
000 950 22 57	07/02 /03	000 950 97 11	08/05 /01	000 951 22 04	07/01 /01		03/10 /01	000 954 20 01	01/12 /01
000 950 22 63	01/06 /02	000 950 97 12	08/05 /01	000 951 22 47	08/08 /01	000 951 72 03	01/14 /02		01/13 /01
	05/03 /06	000 950 97 13	08/05 /01		08/08A /02	000 951 72 07	01/12 /02	000 955 01 04	08/03 /06
	07/03 /01	000 950 97 14	08/05 /01		08/09 /01		01/13 /02	000 955 01 58	01/10 /02
000 950 22 72	01/05 /02	000 950 97 15	08/05 /02		08/09A /02	000 952 01 04	01/12 /01		06/09 /03
	04/01 /03	000 950 97 16	08/05 /02		08/10 /01		01/13 /01		06/13 /01
	04/01 /03	000 950 97 17	08/05 /02		08/10A /02	000 952 01 17	08/05 /03		06/15 /01
	07/02 /03	000 950 97 18	08/05 /02	000 951 22 48	02/01 /02		08/06 /03	000 955 02 12	08/02 /04
000 950 22 73	07/03 /02	000 950 97 19	08/05 /02	000 951 22 86	01/08 /02		08/07 /05		08/03 /06
000 950 22 76	06/04 /03	000 950 97 20	08/05 /02		01/09 /02	000 952 25 32	08/02 /04	000 955 03 02	06/04 /03
000 950 22 82	06/03 /03	000 950 97 21	08/05 /02	000 951 22 95	01/09 /02		08/03 /06	000 955 05 01	08/02 /01
000 950 57 51	08/06 /01	000 950 97 22	08/05 /02	000 951 22 96	07/01 /02	000 952 40 25	07/03 /02		08/03 /01
000 950 57 53	08/06 /01	000 950 97 23	08/05 /02	000 951 24 11	08/05 /01	000 952 40 26	01/05 /03	000 955 05 04	06/06 /02
000 950 57 56	08/06 /01	000 950 97 24	08/05 /02		08/06 /01		07/02 /01		06/07 /02
000 950 57 58	08/06 /01	000 950 97 25	08/05 /02		08/07 /01		07/02 /03	000 955 05 06	05/03 /05
000 950 57 60	08/06 /01	000 950 97 26	08/05 /02	000 951 33 09	01/09 /02	000 952 40 28	07/01 /01	000 955 05 07	08/03 /03
000 950 97 00	08/05 /01	000 950 97 27	08/05 /02	000 951 33 13	01/10 /02	000 952 40 29	02/04 /01	000 955 05 11	01/05 /02
000 950 97 01	08/05 /01	000 950 97 28	08/05 /02	000 951 54 27	01/08 /01	000 952 40 42	08/08A /01	000 955 05 15	08/02 /01
000 950 97 02	08/05 /01	000 950 97 29	08/05 /02		01/09 /01		08/09A /01		08/03 /01
000 950 97 03	08/05 /01	000 950 97 30	08/05 /02	000 951 55 12	01/08 /01		08/10A /01	000 955 06 02	08/05 /03
000 950 97 04	08/05 /01	000 951 01 03	07/03 /02		01/09 /01	000 952 51 81	07/02 /02		08/06 /03
000 950 97 05	08/05 /01	000 951 20 00	07/02 /01	000 951 55 14	01/08 /02	000 952 70 11	08/05 /03		08/07 /05
000 950 97 06	08/05 /01	000 951 20 01	07/02 /01		01/09 /02		08/06 /03	000 955 08 01	03/09 /02
000 950 97 07	08/05 /01	000 951 20 06	01/04 /02		01/10 /03		08/07 /05		03/10 /02

Refer to respective page of Spare Parts List for every part wanted

* = innovation

https://truckmanualshub.com/

Key to part numbers

Part-No.	Page	Part-No.	Page	Part-No.	Page	Part-No.	Page	Part-No.	Page
	07/01 /02		08/07 /02		03/09 /02	000 955 22 78	08/01 /05		01/12 /04
	08/05 /02	000 955 15 01	07/01 /02		03/10 /02	000 955 22 83	01/07 /01		03/08 /02
	08/06 /01		08/05 /02		06/15 /02		01/12 /01		06/01 /06
	08/07 /01		08/06 /01	000 955 20 39	01/05 /01		01/13 /01		06/08 /02
000 955 08 11	08/05 /03		08/07 /01	000 955 20 51	01/14 /02	000 955 22 85	01/12 /01		06/15 /02
	08/06 /01	000 955 20 09	01/05 /02	000 955 20 54	01/04 /02		01/13 /01		06/10 /01
	08/07 /02		01/14 /01	000 955 20 60	01/04 /02	000 955 23 03	01/06 /01		06/16 /01
000 955 08 12	01/03 /03		07/02 /02		01/05 /01		06/13 /01	000 955 30 74	01/10 /01
	06/01 /05	000 955 20 14	01/04 /02		07/02 /01	000 955 26 04	06/04 /03	000 955 36 18	01/04 /02
000 955 08 14	08/05 /02		03/10 /01	000 955 20 62	01/02 /02		06/06 /02	000 955 50 00	01/08 /01
	08/06 /01		03/10 /02		01/05 /01		06/12 /02		01/09 /01
	08/07 /02	000 955 20 31	01/04 /03	000 955 20 65	01/04 /02		06/07 /02		01/10 /02
000 955 08 15	04/01 /03		03/10 /02	000 955 20 68	01/02 /01		06/07 /03	000 955 50 01	01/08 /01
	04/01 /03		07/02 /01	000 955 20 75	01/04 /02	000 955 30 13	03/09 /02		01/09 /01
	07/03 /02	000 955 20 34	01/02 /01		01/04 /02		03/10 /02		01/09 /03
000 955 08 18	04/01 /03		01/02 /01	000 955 20 89	01/06 /01	000 955 30 15	03/09 /02	000 955 50 05	05/01 /01
000 955 08 31	07/01 /02		01/11 /01	000 955 21 14	08/05 /02		03/10 /02	000 955 50 15	01/11 /01
000 955 08 47	08/05 /03		07/02 /01	000 955 21 16	01/05 /02	000 955 30 30	01/08 /03	000 955 50 29	03/09 /02
	08/06 /02	000 955 20 36	01/02 /02	000 955 22 04	06/12 /02		01/09 /04	000 956 01 06	01/08 /01
	08/07 /05		01/04 /02	000 955 22 23	06/01 /03		01/12 /04		01/09 /01
000 955 08 67	04/01 /03		01/04 /03	000 955 22 31	01/14 /02		03/08 /02	000 956 01 09	01/08 /01
000 955 08 68	04/01 /03		01/08 /02	000 955 22 39	01/10 /02	000 955 30 33	06/13 /02		01/09 /01
000 955 09 12	08/07 /02		01/09 /01	000 955 22 41	01/02 /02	000 955 30 42	04/01 /03	000 956 03 04	01/09 /02
000 955 15 00	01/03 /03		03/09 /01	000 955 22 58	01/10 /01	000 955 30 60	07/03 /01	000 956 90 03	01/10 /01
	06/01 /05		03/09 /02		08/08 /02	000 955 30 68	01/06 /01	000 957 00 01	01/05 /02
	08/05 /02		03/10 /02		08/08A /02		01/08 /03	000 957 00 02	01/05 /02
	08/06 /02	000 955 20 37	01/04 /02	000 955 22 61	01/10 /03		01/09 /04	000 957 17 44	04/01 /03

Refer to respective page of Spare Parts List for every part wanted

* = innovation

https://truckmanualshub.com/

Key to part numbers

Part-No.	Page	Part-No.	Page	Part-No.	Page	Part-No.	Page	Part-No.	Page
000 957 17 65	01/06 /01	000 960 80 30	04/02 /02		01/09 /01		07/01 /02		08/04 /21
000 957 18 26	01/08 /01	000 960 80 44	02/05 /02	000 961 91 04	01/01 /01		07/03 /02	000 962 25 20	08/08 /01
	01/09 /01	000 960 80 60	02/05 /03	000 961 91 58	08/04 /20	000 962 04 37	01/05 /02		08/09 /01
000 957 30 74	04/01 /02	000 960 80 61	02/05 /03	000 962 01 00	03/05 /01		07/01 /02		08/10 /01
000 957 30 84	07/01 /02	000 960 80 71	08/04 /10		03/06 /01		07/02 /02	000 962 25 22	07/04 /01
000 957 30 85	07/01 /02	000 960 80 72	08/04 /20		08/02 /02	000 962 04 38	07/02 /02	000 962 25 31	08/04 /21
000 957 30 87	07/02 /02	000 960 80 73	08/04 /14		08/03 /02		07/03 /01	000 962 25 33	08/04 /21
000 957 30 92	01/10 /01	000 960 80 77	07/04 /01	000 962 01 01	04/02 /01		07/03 /01	000 962 25 34	08/04 /10
000 957 34 35	07/01 /01	000 960 80 78	08/04 /04	000 962 01 03	03/02 /03		07/03 /02	000 962 25 61	08/04 /05
000 957 40 65	01/05 /01	000 960 80 79	08/04 /10	000 962 01 22	01/04 /01	000 962 04 39	01/04 /03	000 962 25 74	08/08A /01
000 957 50 04	01/07 /01	000 960 80 80	08/04 /14	000 962 01 25	05/03 /04		07/02 /02		08/09A /01
000 957 50 36	01/12 /01	000 960 80 81	08/04 /20		05/03 /06		07/02 /02		08/10A /01
	01/13 /01	000 960 80 91	08/04 /04	000 962 01 31	01/08 /02	000 962 08 10	02/01 /02	000 962 26 28	04/02 /01
000 957 50 69	01/07 /01	000 960 80 93	08/04 /20		01/09 /03	000 962 19 37	08/08 /01	000 962 26 55	08/04 /05
000 957 50 71	01/12 /01	000 961 00 16	08/04 /20	000 962 01 68	03/01 /03		08/09 /01	000 962 27 16	08/08 /01
	01/13 /01	000 961 02 01	01/10 /01		09/01 /02		08/10 /01		08/09 /01
000 957 51 26	01/14 /02	000 961 02 28	08/02 /04	000 962 01 87	03/08 /01	000 962 19 48	05/03 /05		08/10 /01
000 957 51 27	01/14 /02		08/03 /06	000 962 01 89	03/08 /01	000 962 19 73	07/04 /01	000 962 27 53	02/05 /01
000 957 51 50	01/14 /02	000 961 03 14	04/02 /03		03/08 /02	000 962 19 76	08/04 /04	000 962 33 12	07/04 /01
000 957 51 51	01/14 /02	000 961 04 19	01/05 /01	000 962 01 99	04/02 /02	000 962 19 79	08/08A /01	000 962 33 30	08/04 /20
000 957 53 07	03/10 /01	000 961 04 32	04/02 /02	000 962 02 14	03/01 /02		08/09A /01	000 962 33 31	08/04 /10
000 957 53 08	03/10 /01	000 961 10 93	01/07 /01	000 962 02 48	06/09 /03		08/10A /01	000 962 33 33	08/04 /20
000 957 60 14	01/10 /01	000 961 22 06	07/02 /02	000 962 02 49	03/02 /02	000 962 19 80	08/04 /04	000 962 36 19	07/04 /01
000 957 90 26	03/09 /01	000 961 22 94	08/05 /01	000 962 02 58	03/09 /02	000 962 20 04	08/04 /20	000 962 36 24	04/02 /02
	03/10 /01		08/06 /01	000 962 02 72	03/01 /01	000 962 20 05	08/04 /10	000 962 38 26	02/05 /01
000 957 90 27	03/09 /01		08/07 /01	000 962 03 05	03/08 /01	000 962 20 11	08/04 /10	000 962 49 28	02/05 /02
000 957 90 60	03/09 /01	000 961 51 26	01/08 /01	000 962 04 36	01/05 /02	000 962 20 12	08/04 /21	000 962 50 03	06/01 /03

Refer to respective page of Spare Parts List for every part wanted

* = innovation

https://truckmanualshub.com/

Key to part numbers

Part-No.	Page	Part-No.	Page	Part-No.	Page	Part-No.	Page	Part-No.	Page
000 962 50 05	03/02 /03	000 962 90 97	07/01 /01	000 963 12 28	02/03 /01		07/02 /01		06/04 /03
000 962 50 12	03/08 /05	000 962 91 38	04/01 /01		02/02 /02	000 963 22 33	02/01 /02		06/09 /01
000 962 50 29	04/01 /02	000 963 00 29	07/01 /02	000 963 20 20	04/01 /02	000 963 22 38	02/05 /02		06/08 /01
000 962 50 35	03/02 /01	000 963 00 38	02/04 /01		08/01 /04	000 963 22 48	08/04 /10	000 964 03 37	06/08 /01
000 962 50 50	03/08 /05	000 963 01 01	07/01 /02		08/02 /04	000 963 23 03	08/03 /05		06/08 /02
000 962 50 55	07/04 /01	000 963 01 06	08/02 /03		08/03 /06	000 963 23 19	04/02 /01	000 964 03 40	03/10 /02
000 962 50 63	03/02 /01		08/02 /03	000 963 20 31	02/05 /01	000 963 23 33	08/04 /14	000 964 05 10	03/02 /04
000 962 50 64	06/01 /05		08/03 /04	000 963 20 36	01/05 /01	000 963 24 33	08/04 /04	000 964 08 46	04/01 /03
000 962 55 23	05/03 /05	000 963 01 12	02/06 /01	000 963 21 06	07/01 /02	000 963 26 02	07/03 /01	000 964 10 94	03/08 /04
000 962 55 41	05/04 /03	000 963 02 01	07/01 /01		07/01 /02	000 964 01 09	03/04 /01	000 964 11 10	03/02 /01
000 962 55 42	05/04 /03		08/01 /04	000 963 21 07	02/05 /02	000 964 01 25	03/04 /01	000 964 11 11	03/02 /01
000 962 55 53	06/11 /02		08/02 /02	000 963 21 14	02/06 /01	000 964 01 29	04/02 /03	000 964 11 16	03/08 /03
000 962 55 75	05/01 /01		08/03 /02	000 963 21 24	07/02 /02	000 964 03 05	03/08 /05	000 964 11 19	03/08 /03
	05/02 /01	000 963 02 02	06/02 /01	000 963 21 28	04/01 /02		06/01 /06	000 964 11 25	03/08 /03
000 962 60 00	01/02 /01	000 963 02 27	07/03 /01		07/01 /01	000 964 03 14	03/09 /01	000 964 12 00	01/04 /01
000 962 60 01	01/02 /01	000 963 02 65	05/03 /05		07/03 /02	000 964 03 17	06/01 /05	000 964 12 02	03/02 /03
000 962 60 03	01/11 /01		07/02 /01	000 963 21 42	07/01 /01		06/08 /02	000 964 12 73	03/03 /01
000 962 65 00	03/08 /05	000 963 04 11	08/08 /01	000 963 21 46	07/02 /02		06/08 /02	000 964 13 34	09/01 /01
000 962 65 01	03/02 /04		08/09 /01	000 963 21 49	07/01 /01		06/12 /01	000 964 13 56	01/11 /01
	03/09 /01		08/10 /01		07/03 /02		06/10 /01		03/01 /03
000 962 65 04	03/01 /02	000 963 05 00	07/04 /01	000 963 21 53	07/01 /01	000 964 03 25	03/10 /02		06/10 /01
	03/02 /04	000 963 05 04	03/09 /01	000 963 21 59	07/02 /02	000 964 03 27	01/10 /02		08/05 /04
000 962 65 05	03/01 /02	000 963 06 39	08/04 /20	000 963 22 05	01/05 /01		01/12 /02		08/07 /05
	06/08 /02	000 963 08 05	02/06 /01		07/01 /01		01/13 /02	000 964 13 89	03/08 /03
000 962 65 06	03/01 /02	000 963 08 13	02/05 /02		07/03 /02	000 964 03 31	06/14 /02	000 964 14 14	01/12 /01
000 962 65 07	03/01 /02	000 963 11 14	02/01 /01	000 963 22 08	02/05 /02		06/14A /02		01/13 /01
000 962 90 55	02/05 /03	000 963 11 26	02/01 /01	000 963 22 16	02/06 /01	000 964 03 35	01/11 /01	000 964 14 22	01/09 /01

Refer to respective page of Spare Parts List for every part wanted

* = innovation

https://truckmanualshub.com/

Key to part numbers

Part-No.	Page	Part-No.	Page	Part-No.	Page	Part-No.	Page	Part-No.	Page
000 964 14 27	01/09 /03	000 964 23 42	05/04 /01	000 964 55 08	03/08 /02	000 965 41 39	05/04 /03		06/11 /03
000 964 14 47	01/08 /01	000 964 25 03	08/07 /03	000 964 55 17	06/09 /03	000 965 55 12	03/02 /01	000 973 26 03	01/12 /03
000 964 14 56	01/09 /02	000 964 37 09	01/11 /01		06/12 /02	000 971 01 00	01/03 /02		01/13 /02
000 964 14 61	01/09 /02		01/12 /03		06/13 /01	000 971 01 06	01/03 /02	000 973 26 14	06/09 /01
000 964 15 13	01/14 /01		01/13 /03	000 964 65 38	01/12 /01	000 971 01 80	01/03 /02		06/11 /02
000 964 15 22	01/08 /01	000 964 37 25	04/03 /02	000 964 65 39	01/12 /01	000 971 01 91	01/03 /02	000 973 26 20	03/08 /02
000 964 15 56	01/10 /02	000 964 37 32	03/08 /05	000 964 65 40	01/12 /01	000 971 03 03	01/03 /01	000 973 29 28	03/09 /01
000 964 16 03	01/04 /03		06/10 /01	000 964 65 45	03/02 /03	000 971 03 93	01/03 /01	000 973 29 31	01/09 /03
	03/09 /02	000 964 37 38	05/03 /01	000 964 70 00	10/01A /01	000 971 56 76	06/01 /02	000 973 29 35	05/03 /02
000 964 18 11	03/03 /01	000 964 38 01	01/10 /02	000 964 70 02	10/01 /01	000 971 81 79	01/04 /01	000 973 29 51	05/03 /02
000 964 18 24	03/03 /01	000 964 45 14	04/01 /03		10/01A /01	000 972 02 01	01/14 /01	000 973 30 23	05/03 /02
000 964 18 30	03/08 /01	000 964 45 37	01/12 /03	000 964 70 03	10/01 /01	000 972 02 07	01/14 /01	000 973 30 33	05/03 /02
000 964 18 32	03/08 /01	000 964 45 38	01/12 /03		10/01A /02	000 972 13 02	01/14 /01	000 973 40 69	03/08 /01
000 964 18 33	03/08 /01	000 964 45 68	08/06 /02	000 964 70 28	10/01A /03	000 972 17 02	01/03 /01	000 973 40 85	03/08 /02
000 964 18 34	03/08 /04		08/07 /04	000 964 84 05	01/07 /02	000 973 02 12	06/01 /02	000 973 40 95	03/08 /01
000 964 18 99	03/03 /01	000 964 45 71	08/01 /04	000 964 84 06	01/07 /02	000 973 04 38	03/08 /03	000 973 40 96	03/08 /02
000 964 19 02	03/02 /04	000 964 45 87	05/03 /01	000 965 21 05	05/04 /01	000 973 04 41	03/02 /03	000 973 41 10	03/08 /05
000 964 19 62	08/05 /03	000 964 45 91	05/03 /01	000 965 21 10	05/04 /01		06/01 /02	000 973 41 12	03/08 /06
000 964 19 64	03/08 /02	000 964 46 34	06/01 /02	000 965 21 11	07/03 /01	000 973 12 11	01/05 /01	000 973 41 15	03/08 /06
000 964 19 65	03/08 /02	000 964 46 37	05/03 /01	000 965 22 02	03/01 /02	000 973 13 02	01/03 /01	000 973 42 06	03/08 /01
000 964 19 85	08/02 /04	000 964 46 38	05/03 /01	000 965 25 07	09/01 /01	000 973 13 15	01/13 /02	000 973 50 11	06/09 /03
	08/03 /06	000 964 46 39	05/03 /01	000 965 25 15	03/08 /05		06/01 /01		06/11 /02
000 964 19 86	03/10 /01	000 964 46 49	01/10 /01	000 965 35 03	08/01 /06		06/01 /01	000 973 60 04	05/01 /01
000 964 20 00	03/08 /01		01/10 /02	000 965 40 35	03/01 /02	000 973 15 15	06/01 /02		05/02 /01
000 964 21 32	01/05 /01	000 964 46 50	01/09 /03	000 965 40 36	03/01 /02	000 973 24 00	06/09 /01	000 973 60 84	02/06 /01
000 964 21 54	06/10 /01	000 964 55 04	03/08 /01	000 965 40 54	01/03 /02		06/11 /02	000 973 60 85	02/06 /01
000 964 23 25	08/03 /06	000 964 55 06	03/08 /02	000 965 41 00	01/03 /02	000 973 25 02	06/01 /01	000 973 60 99	05/01 /01

Refer to respective page of Spare Parts List for every part wanted

* = innovation

https://truckmanualshub.com/

Key to part numbers

Part-No.	Page
	05/02 /01
000 973 70 05	06/01 /04
000 973 90 05	06/03 /02
000 974 02 14	06/09 /02
000 974 02 15	06/09 /02
000 974 02 21	06/09 /02
000 974 02 22	06/11 /02
000 974 04 23	06/08 /01
000 974 04 25	06/09 /01
000 974 04 32	06/11 /01
000 974 07 00	09/01 /01
000 974 10 02	06/11 /01
000 974 10 28	06/09 /01
000 974 15 08	01/12 /03
000 974 15 24	01/06 /01
	01/13 /03
000 974 17 00	09/01 /01
000 974 18 00	06/10 /01
000 974 18 01	06/10 /01
000 974 60 36	06/09 /02
000 974 60 38	06/09 /01
000 974 78 01	09/01 /01
000 974 82 10	06/09 /01
000 975 15 00	06/16 /01
000 975 15 25	06/03 /01
	06/04 /01
	06/05 /01
	06/16 /01
000 975 15 29	06/03 /02
	06/04 /02
	06/05 /02
	06/12 /02
	06/14A /01
	06/16 /01
000 975 15 33	06/06 /01
	06/14A /02
	06/15 /02
	06/07 /01
000 975 17 04	06/03 /02
	06/04 /02
	06/05 /02
000 975 17 05	05/01 /01
	05/02 /01
	06/03 /02
	06/04 /02
	06/05 /02
000 975 17 08	06/03 /02
	06/04 /02
	06/05 /02
	06/14 /01
000 975 17 17	03/08 /06
	06/12 /02
	06/13 /01
	06/15 /01
000 975 17 18	03/08 /06
	06/09 /03
	06/11 /02
	06/12 /01
000 975 17 19	06/12 /02
	06/15 /01
000 975 17 20	06/12 /01
	06/15 /01
000 975 17 28	06/14 /02
	06/14A /02
	06/15 /02
000 975 17 38	06/15 /02
	06/07 /02
000 975 17 47	03/08 /06
	06/12 /01
	06/14 /02
	06/14A /02
000 975 17 65	03/08 /06
	06/06 /02
	06/12 /01
	06/14 /02
	06/14A /02
	06/07 /01
000 975 17 85	06/06 /01
	06/07 /01
000 975 17 86	06/06 /01
	06/07 /01
000 975 18 04	06/07 /03
000 975 18 05	06/07 /02
000 975 18 13	06/07 /02
000 975 19 02	01/05 /01
000 975 26 07	03/08 /06
000 975 40 00	03/10 /01
000 975 50 09	06/03 /02
	06/04 /03
	06/05 /03
000 975 70 33	06/01 /02
000 975 70 39	06/01 /05
000 975 75 24	06/01 /03
000 975 75 38	06/01 /05
000 975 90 10	01/14 /01
000 976 10 04	01/04 /01
000 976 31 08	01/03 /01
000 976 45 00	06/04 /03
	06/05 /03
000 977 23 40	06/14 /02
	06/14A /02
000 977 28 05	06/01 /03
000 977 39 00	06/02 /01
000 977 64 27	06/06 /02
	06/07 /02
000 978 50 00	05/01 /02
	05/02 /01
000 980 11 02	01/06 /01
000 980 20 00	01/01 /01
000 981 00 80	02/05 /02
000 981 01 23	02/05 /03
000 981 01 24	02/05 /03
000 981 02 05	01/14 /01
000 981 18 01	03/09 /01
000 981 21 29	02/05 /02
000 982 08 09	01/04 /02
000 982 08 41	01/04 /02
000 982 15 01	01/14 /01
000 983 02 10	03/10 /01
000 983 05 03	01/05 /02
000 983 05 09	01/05 /02
000 983 06 08	01/01 /01
000 983 06 11	07/03 /01
000 983 08 42	07/02 /01
000 983 10 02	01/06 /01
000 983 16 00	07/02 /01
000 983 16 16	07/03 /01
000 983 16 23	01/08 /01
	01/09 /01
000 983 16 25	01/05 /02
000 983 16 47	01/05 /02
000 983 20 11	01/02 /01
000 983 20 30	01/11 /01
000 983 20 68	01/02 /01
000 983 21 08	07/02 /01

Refer to respective page of Spare Parts List for every part wanted

* = innovation

https://truckmanualshub.com/

Key to part numbers

Part-No.	Page	Part-No.	Page	Part-No.	Page	Part-No.	Page	Part-No.	Page
000 983 21 14	07/02 /01	000 990 20 82	04/03 /01	000 993 70 94	04/03 /01	100 447 09 02	08/01 /04	160 430 72 07	09/02 /01
000 983 77 03	07/02 /01	000 990 21 40	04/03 /01	000 993 82 01	04/03 /02	100 447 09 03	08/01 /04	160 446 36 05	08/08 /02
000 983 81 03	01/02 /01	000 990 21 62	04/03 /02	000 993 82 21	04/03 /02	100 447 09 04	08/01 /04		08/08A /02
000 983 83 01	01/11 /01	000 990 23 05	04/03 /02	000 993 83 02	04/03 /02	100 447 09 05	08/01 /04	160 446 36 15	08/05 /03
000 983 83 09	01/11 /01	000 990 23 19	04/03 /02	000 993 83 21	04/03 /01	100 447 09 06	08/01 /04	163 446 14 10	08/01 /04
000 983 84 03	07/02 /01	000 990 23 24	04/03 /01	000 993 84 01	04/03 /02	100 447 09 07	08/01 /04	180 410 10 40	08/01 /01
000 983 85 01	01/06 /01		04/03 /02	000 994 01 13	06/09 /01	100 447 09 08	08/01 /04	180 410 10 42	08/01 /01
000 983 87 09	01/11 /01	000 990 24 98	04/03 /01	000 994 01 14	06/09 /03	100 447 09 09	08/01 /04	180 410 10 44	08/01 /01
000 983 90 02	01/02 /01	000 990 40 00	09/01 /02		06/11 /02	100 447 09 10	08/01 /05	180 410 10 48	08/01 /01
000 983 90 12	01/02 /01	000 991 01 02	04/01 /02	000 994 04 00	09/01 /01	100 447 12 01	08/01 /05	180 410 10 50	08/01 /01
000 983 91 17	01/02 /01	000 991 01 49	04/01 /02	000 994 10 07	09/01 /02	100 447 12 02	08/01 /05	180 410 10 52	08/01 /01
000 983 92 69	01/02 /01	000 991 02 05	04/01 /02	000 994 10 12	09/01 /02	100 447 12 03	08/01 /05	180 410 10 54	08/01 /01
000 983 92 73	07/02 /01	000 991 02 06	04/01 /02	001 952 30 00	08/03 /04	100 447 12 04	08/01 /05	180 410 10 56	08/01 /01
000 983 94 52	01/11 /01	000 991 03 06	04/01 /02	002 903 02 00	08/04 /04	100 447 12 05	08/01 /05	180 410 10 60	08/01 /01
000 983 98 06	01/02 /01	000 991 04 02	04/01 /02	002 938 60 00	10/01A /03	100 447 12 06	08/01 /05	180 410 10 63	08/01 /01
000 983 98 07	01/02 /01	000 993 20 03	04/03 /01	002 978 05 11	01/06 /01	100 447 12 07	08/01 /05	180 410 10 64	08/01 /01
000 983 99 28	01/12 /01	000 993 20 87	04/03 /01		06/03 /01	100 447 12 08	08/01 /05	180 410 10 68	08/01 /01
	01/13 /01	000 993 20 94	04/03 /01		06/04 /01	100 447 12 09	08/01 /05	180 410 15 00	08/01 /01
000 983 99 29	01/03 /01	000 993 21 26	04/03 /01		06/05 /01	100 447 12 10	08/01 /05	180 410 15 02	08/01 /01
000 990 05 28	04/03 /01	000 993 22 13	04/03 /01		06/06 /01	115 446 56 03	08/08A /01	180 410 15 04	08/01 /01
000 990 05 40	04/03 /01	000 993 36 26	08/01 /02		06/13 /01		08/09A /01	180 410 15 08	08/01 /01
000 990 05 47	04/03 /01	000 993 36 74	03/04 /01		06/14 /01		08/10A /01	180 410 15 10	08/01 /01
000 990 05 84	04/03 /01	000 993 36 94	03/04 /01		06/15 /02	115 446 56 04	08/08A /01	180 410 15 12	08/01 /01
000 990 15 00	04/03 /01	000 993 37 18	01/03 /03		06/07 /01		08/09A /01	180 410 15 14	08/01 /01
000 990 18 42	04/03 /01	000 993 70 31	04/03 /02		06/16 /01		08/10A /01	180 410 15 16	08/01 /01
000 990 20 18	04/03 /01	000 993 70 32	04/03 /01	100 447 09 00	08/01 /04	117 446 27 01	08/04 /04	180 410 15 20	08/01 /01
000 990 20 44	04/03 /01		04/03 /02	100 447 09 01	08/01 /04	150 430 72 05	09/02 /01	180 410 15 23	08/01 /01

Refer to respective page of Spare Parts List for every part wanted

* = innovation

https://truckmanualshub.com/

Key to part numbers

Part-No.	Page	Part-No.	Page	Part-No.	Page	Part-No.	Page	Part-No.	Page
180 410 15 24	08/01 /01	180 410 33 58	08/03 /03	180 440 43 27	08/03 /01	180 440 46 17	08/07 /04	180 440 52 08	08/04 /05
180 410 15 28	08/01 /01	180 410 33 60	08/03 /03	180 440 43 30	08/03 /01	180 440 46 18	08/07 /04	180 440 52 11	08/04 /05
180 410 25 30	08/02 /01	180 410 33 61	08/03 /03	180 440 43 32	08/03 /01	180 440 46 19	08/07 /04	180 440 52 13	08/04 /05
180 410 25 33	08/02 /01	180 410 33 63	08/03 /03	180 440 43 33	08/03 /01	180 440 46 20	08/07 /03	180 440 52 16	08/04 /05
180 410 25 35	08/02 /01	180 410 33 65	08/03 /03	180 440 43 35	08/03 /01	180 440 46 21	08/07 /03	180 440 52 18	08/04 /05
180 410 25 38	08/02 /01	180 440 15 10	08/09 /02	180 440 43 37	08/03 /01	180 440 46 23	08/07 /03	180 440 52 50	08/04 /11
180 410 25 40	08/02 /01		08/09A /02	180 440 45 02	08/06 /03	180 440 46 24	08/07 /03	180 440 52 51	08/04 /11
180 410 30 30	08/02 /01		08/10 /02	180 440 45 03	08/06 /03	180 440 46 25	08/07 /03	180 440 52 52	08/04 /11
	08/03 /01		08/10A /02	180 440 45 04	08/06 /03	180 440 46 30	08/07 /03	180 440 52 55	08/04 /11
180 410 30 31	08/03 /01	180 440 17 00	08/04 /05	180 440 45 06	08/06 /03	180 440 46 31	08/07 /03	180 440 52 56	08/04 /11
180 410 30 33	08/02 /01	180 440 17 85	08/04 /14	180 440 45 07	08/06 /03	180 440 46 32	08/07 /03	180 440 52 57	08/04 /11
	08/03 /01	180 440 17 86	08/04 /14	180 440 45 22	08/06 /03	180 440 46 33	08/07 /03	180 440 52 59	08/04 /11
180 410 30 34	08/03 /01	180 440 17 88	08/04 /15	180 440 45 24	08/06 /03	180 440 46 34	08/07 /03	180 440 52 61	08/04 /11
180 410 30 35	08/02 /01	180 440 17 89	08/04 /15	180 440 45 25	08/06 /03	180 440 46 35	08/07 /03	180 440 52 70	08/04 /11
	08/03 /01	180 440 17 90	08/04 /15	180 440 45 26	08/06 /03	180 440 46 36	08/07 /03	180 440 52 71	08/04 /11
180 410 30 38	08/02 /01	180 440 17 93	08/04 /16	180 440 45 27	08/06 /03	180 440 46 37	08/07 /03	180 440 52 72	08/04 /11
	08/03 /01	180 440 17 95	08/04 /16	180 440 45 30	08/06 /03	180 440 46 38	08/07 /03	180 440 52 75	08/04 /11
180 410 30 40	08/02 /01	180 440 17 96	08/04 /16	180 440 45 32	08/06 /03	180 440 46 39	08/07 /03	180 440 52 76	08/04 /11
180 410 30 41	08/03 /01	180 440 17 97	08/04 /16	180 440 45 34	08/06 /03	180 440 46 40	08/07 /02	180 440 52 77	08/04 /11
180 410 30 42	08/03 /01	180 440 17 99	08/04 /17	180 440 45 35	08/06 /03	180 440 46 41	08/07 /02	180 440 52 79	08/04 /11
180 410 30 44	08/03 /01	180 440 25 02	08/06 /03	180 440 46 10	08/07 /04	180 440 46 42	08/07 /02	180 440 52 81	08/04 /11
180 410 30 46	08/03 /01		08/07 /04	180 440 46 11	08/07 /04	180 440 46 43	08/07 /03	180 440 52 85	08/04 /15
180 410 33 50	08/03 /03	180 440 29 03	08/07 /02	180 440 46 12	08/07 /04	180 440 46 55	08/07 /03	180 440 52 86	08/04 /15
180 410 33 51	08/03 /03	180 440 43 22	08/03 /01	180 440 46 13	08/07 /04	180 440 48 00	08/01 /06	180 440 52 87	08/04 /15
180 410 33 53	08/03 /03	180 440 43 23	08/03 /01	180 440 46 14	08/07 /04	180 440 52 01	08/04 /05	180 440 52 90	08/04 /16
180 410 33 54	08/03 /03	180 440 43 25	08/03 /01	180 440 46 15	08/07 /04	180 440 52 03	08/04 /05	180 440 52 92	08/04 /16
180 410 33 55	08/03 /03	180 440 43 26	08/03 /01	180 440 46 16	08/07 /04	180 440 52 06	08/04 /05	180 440 52 93	08/04 /16

Refer to respective page of Spare Parts List for every part wanted

* = innovation

https://truckmanualshub.com/

Key to part numbers

Part-No.	Page	Part-No.	Page	Part-No.	Page	Part-No.	Page	Part-No.	Page
180 440 52 94	08/04 /16	180 440 53 34	08/04 /02	180 440 62 11	08/04 /05	180 440 63 28	08/10A /01	180 440 91 22	08/01 /04
180 440 52 96	08/04 /17	180 440 53 35	08/04 /02	180 440 62 13	08/04 /06	180 440 77 07	08/09 /01	180 440 91 23	08/01 /04
180 440 52 98	08/04 /17	180 440 53 36	08/04 /02	180 440 62 15	08/04 /06		08/09A /02	180 440 91 24	08/02 /04
180 440 53 10	08/04 /01	180 440 53 37	08/04 /02	180 440 62 36	08/04 /17		08/10 /01	180 440 91 25	08/02 /04
180 440 53 11	08/04 /01	180 440 53 38	08/04 /02	180 440 62 60	08/04 /05		08/10A /02	180 440 91 32	08/08A /01
180 440 53 12	08/04 /01	180 440 53 39	08/04 /02	180 440 62 61	08/04 /05	180 440 77 10	08/06 /03		08/09A /01
180 440 53 13	08/04 /01	180 440 53 40	08/04 /02	180 440 62 63	08/04 /05	180 440 77 18	08/06 /02		08/10A /01
180 440 53 14	08/04 /01	180 440 54 17	08/04 /07	180 440 62 64	08/04 /05	180 440 77 22	08/05 /02	180 440 91 53	08/08A /01
180 440 53 15	08/04 /01	180 440 54 18	08/04 /07	180 440 62 65	08/04 /05	180 440 77 24	08/07 /02		08/09A /01
180 440 53 16	08/04 /01	180 440 54 19	08/04 /07	180 440 62 68	08/04 /05	180 440 77 25	08/06 /02		08/10A /01
180 440 53 17	08/04 /01	180 440 54 20	08/04 /07	180 440 62 70	08/04 /14	180 440 77 27	08/07 /04	180 440 98 10	08/09 /01
180 440 53 18	08/04 /01	180 440 54 21	08/04 /07	180 440 62 71	08/04 /14	180 440 77 28	08/06 /02	180 440 98 11	08/10 /01
180 440 53 19	08/04 /01	180 440 54 22	08/04 /07	180 440 62 73	08/04 /10	180 440 77 29	08/06 /01	180 440 98 18	08/08 /01
180 440 53 20	08/04 /01	180 440 54 23	08/04 /07	180 440 62 74	08/04 /10	180 440 77 91	08/06 /03	180 440 98 28	08/08A /01
180 440 53 21	08/04 /01	180 440 54 24	08/04 /07	180 440 62 76	08/04 /10	180 440 77 94	08/07 /02	180 440 98 29	08/09A /01
180 440 53 22	08/04 /01	180 440 54 25	08/04 /07	180 440 62 77	08/04 /11	180 440 77 95	08/07 /04	180 440 98 30	08/10A /01
180 440 53 23	08/04 /01	180 440 54 26	08/04 /08	180 440 62 80	08/04 /05	180 440 91 06	08/03 /06	180 441 09 09	08/06 /02
180 440 53 24	08/04 /01	180 440 54 27	08/04 /08	180 440 62 81	08/04 /05	180 440 91 07	08/01 /04	180 441 09 22	08/07 /02
180 440 53 25	08/04 /01	180 440 54 28	08/04 /08	180 440 62 83	08/04 /05	180 440 91 09	08/02 /04	180 441 19 02	08/03 /05
180 440 53 26	08/04 /01	180 440 54 29	08/04 /08	180 440 62 84	08/04 /05	180 440 91 12	08/01 /04	180 441 19 03	08/05 /03
180 440 53 27	08/04 /01	180 440 54 30	08/04 /08	180 440 62 85	08/04 /05	180 440 91 13	08/02 /04	180 441 19 10	08/03 /05
180 440 53 28	08/04 /01	180 440 62 00	08/04 /05	180 440 62 88	08/04 /05	180 440 91 14	08/03 /06	180 441 48 06	08/09 /02
180 440 53 29	08/04 /01	180 440 62 01	08/04 /06	180 440 63 20	08/09 /01	180 440 91 15	08/09 /01		08/09A /02
180 440 53 30	08/04 /01	180 440 62 03	08/04 /06	180 440 63 21	08/10 /01		08/10 /01		08/10 /02
180 440 53 31	08/04 /01	180 440 62 05	08/04 /06	180 440 63 25	08/08 /01	180 440 91 19	08/08 /01		08/10A /02
180 440 53 32	08/04 /01	180 440 62 08	08/04 /05	180 440 63 26	08/08A /01	180 440 91 20	08/03 /06	180 441 48 20	08/06 /01
180 440 53 33	08/04 /01	180 440 62 10	08/04 /05	180 440 63 27	08/09A /01	180 440 91 21	08/03 /06		08/07 /02

Refer to respective page of Spare Parts List for every part wanted

* = innovation

https://truckmanualshub.com/

Key to part numbers

Part-No.	Page	Part-No.	Page	Part-No.	Page	Part-No.	Page	Part-No.	Page
180 441 58 00	08/06 /04	180 446 00 93	08/04 /13	180 446 01 89	08/04 /17		08/09A /01	180 446 11 01	08/04 /21
	08/07 /05	180 446 00 94	08/04 /13	180 446 01 90	08/04 /17		08/10A /01	180 446 11 03	08/04 /21
180 441 58 01	08/06 /04	180 446 00 95	08/04 /13	180 446 01 91	08/04 /17	180 446 09 01	08/01 /02	180 446 12 08	08/04 /13
	08/07 /05	180 446 00 96	08/04 /12	180 446 01 92	08/04 /17		08/02 /01	180 446 12 09	08/04 /13
180 441 58 09	08/07 /03	180 446 00 97	08/04 /12	180 446 01 93	08/04 /17		08/03 /02		08/04 /21
180 441 58 12	08/06 /02	180 446 00 98	08/04 /12	180 446 01 94	08/04 /17	180 446 09 06	08/08A /01	180 446 12 10	08/04 /20
	08/06 /02	180 446 01 48	08/04 /11	180 446 01 95	08/04 /17		08/09A /01	180 446 12 11	08/04 /21
180 441 58 15	08/09 /02	180 446 01 49	08/04 /11	180 446 01 96	08/04 /18		08/10A /01	180 446 12 12	08/04 /10
	08/09A /02	180 446 01 50	08/04 /11	180 446 01 97	08/04 /18	180 446 09 07	08/08A /01	180 446 12 13	08/04 /21
	08/10 /02	180 446 01 51	08/04 /11	180 446 01 98	08/04 /18		08/09A /01	180 446 12 14	08/04 /20
	08/10A /02	180 446 01 52	08/04 /11	180 446 01 99	08/04 /11		08/10A /01	180 446 16 00	08/01 /02
180 441 58 34	08/07 /03	180 446 01 53	08/04 /12	180 446 03 34	08/04 /10	180 446 10 01	08/08 /01	180 446 24 00	08/02 /02
180 441 58 36	08/06 /02	180 446 01 54	08/04 /12	180 446 03 35	08/04 /10		08/09 /01		08/03 /02
	08/07 /04	180 446 01 55	08/04 /12	180 446 03 36	08/04 /10		08/10 /01	180 446 25 04	08/06 /04
180 441 58 52	08/07 /03	180 446 01 56	08/04 /12	180 446 03 37	08/04 /10	180 446 10 02	08/08 /01		08/07 /04
180 441 58 60	08/07 /03	180 446 01 57	08/04 /12	180 446 03 38	08/04 /10		08/09 /01	180 446 25 24	08/08 /01
180 441 58 65	08/07 /03	180 446 01 58	08/04 /12	180 446 03 39	08/04 /10		08/10 /01		08/09 /01
180 446 00 83	08/04 /12	180 446 01 59	08/04 /12	180 446 03 40	08/04 /10	180 446 10 03	08/08A /01		08/10 /01
180 446 00 84	08/04 /12	180 446 01 60	08/04 /12	180 446 03 41	08/04 /10		08/09A /01	180 446 25 25	08/08 /01
180 446 00 85	08/04 /12	180 446 01 61	08/04 /12	180 446 03 42	08/04 /10		08/10A /01		08/09 /01
180 446 00 86	08/04 /13	180 446 01 62	08/04 /12	180 446 03 43	08/04 /10	180 446 10 04	08/08A /01		08/10 /01
180 446 00 87	08/04 /13	180 446 01 83	08/04 /17	180 446 03 44	08/04 /10		08/09A /01	180 446 25 46	08/08A /01
180 446 00 88	08/04 /13	180 446 01 84	08/04 /17	180 446 03 45	08/04 /10		08/10A /01		08/09A /01
180 446 00 89	08/04 /13	180 446 01 85	08/04 /17	180 446 03 46	08/04 /09	180 446 10 05	08/08A /01		08/10A /01
180 446 00 90	08/04 /13	180 446 01 86	08/04 /17	180 446 03 47	08/04 /10		08/09A /01	180 446 25 47	08/08A /01
180 446 00 91	08/04 /13	180 446 01 87	08/04 /17	180 446 03 48	08/04 /10		08/10A /01		08/09A /01
180 446 00 92	08/04 /13	180 446 01 88	08/04 /17	180 446 06 04	08/08A /01	180 446 11 00	08/04 /21		08/10A /01

Refer to respective page of Spare Parts List for every part wanted

* = innovation

https://truckmanualshub.com/

Key to part numbers

Part-No.	Page	Part-No.	Page	Part-No.	Page	Part-No.	Page	Part-No.	Page
180 446 25 48	08/08A /01	180 446 48 65	08/04 /12	180 446 48 92	08/04 /19	180 446 58 06	08/04 /08	180 446 58 33	08/04 /07
	08/09A /01	180 446 48 66	08/04 /12	180 446 48 93	08/04 /19		08/04 /09	180 446 58 34	08/04 /07
	08/10A /01	180 446 48 67	08/04 /13	180 446 48 94	08/04 /08	180 446 58 07	08/04 /09	180 446 58 35	08/04 /07
180 446 26 22	08/06 /02	180 446 48 68	08/04 /13	180 446 48 95	08/04 /08	180 446 58 08	08/04 /09	180 446 58 36	08/04 /09
	08/07 /04	180 446 48 69	08/04 /13	180 446 48 96	08/04 /08	180 446 58 09	08/04 /09	180 446 58 37	08/04 /09
180 446 29 15	08/02 /03	180 446 48 70	08/04 /13	180 446 48 97	08/04 /08	180 446 58 10	08/04 /09	180 446 58 38	08/04 /09
180 446 29 18	08/02 /03	180 446 48 71	08/04 /13	180 446 48 98	08/04 /08	180 446 58 11	08/04 /09	180 446 58 39	08/04 /09
180 446 29 20	08/02 /03	180 446 48 72	08/04 /13	180 446 48 99	08/04 /08	180 446 58 12	08/04 /09	180 446 58 40	08/04 /09
180 446 29 23	08/02 /03	180 446 48 73	08/04 /13	180 446 54 00	08/02 /02	180 446 58 13	08/04 /09	180 446 59 00	08/04 /06
180 446 29 25	08/02 /03	180 446 48 74	08/04 /13		08/03 /02	180 446 58 14	08/04 /09	180 446 59 01	08/04 /06
180 446 29 39	08/03 /06	180 446 48 75	08/04 /13	180 446 55 00	08/01 /03	180 446 58 15	08/04 /09	180 446 59 02	08/04 /06
180 446 29 62	08/03 /05	180 446 48 76	08/04 /13	180 446 55 01	08/02 /02	180 446 58 17	08/04 /09	180 446 59 03	08/04 /06
180 446 29 63	08/03 /05	180 446 48 77	08/04 /13		08/03 /02	180 446 58 18	08/04 /09	180 446 59 04	08/04 /06
180 446 29 74	08/03 /05	180 446 48 78	08/04 /18	180 446 55 03	08/01 /02	180 446 58 19	08/04 /09	180 446 59 05	08/04 /06
180 446 29 75	08/03 /05	180 446 48 79	08/04 /18	180 446 55 04	08/02 /02	180 446 58 20	08/04 /09	180 446 59 06	08/04 /07
180 446 29 77	08/02 /03	180 446 48 80	08/04 /19		08/03 /02	180 446 58 21	08/04 /09	180 446 59 07	08/04 /07
180 446 29 80	08/02 /03	180 446 48 81	08/04 /19	180 446 58 00	08/04 /08	180 446 58 22	08/04 /08	180 446 59 08	08/04 /06
180 446 29 82	08/02 /03	180 446 48 82	08/04 /19		08/04 /08	180 446 58 23	08/04 /08	180 446 59 09	08/04 /07
180 446 29 85	08/02 /03	180 446 48 83	08/04 /19	180 446 58 01	08/04 /08	180 446 58 24	08/04 /12	180 446 59 10	08/04 /07
180 446 29 87	08/02 /03	180 446 48 84	08/04 /19		08/04 /08	180 446 58 25	08/04 /12	180 446 59 11	08/04 /07
180 446 41 05	08/04 /13	180 446 48 85	08/04 /19	180 446 58 02	08/04 /08	180 446 58 26	08/04 /12	180 446 59 12	08/04 /07
180 446 41 06	08/04 /20	180 446 48 86	08/04 /19	180 446 58 03	08/04 /08	180 446 58 27	08/04 /18	180 446 59 13	08/04 /07
180 446 41 07	08/04 /10	180 446 48 87	08/04 /19		08/04 /09	180 446 58 28	08/04 /18	180 446 59 14	08/04 /06
180 446 41 09	08/04 /04	180 446 48 88	08/04 /19	180 446 58 04	08/04 /08	180 446 58 29	08/04 /18	180 446 59 15	08/04 /06
180 446 41 13	08/04 /20	180 446 48 89	08/04 /19		08/04 /09	180 446 58 30	08/04 /09	180 446 59 16	08/04 /17
180 446 45 05	08/02 /02	180 446 48 90	08/04 /19	180 446 58 05	08/04 /08	180 446 58 31	08/04 /09	180 446 59 17	08/04 /17
	08/03 /02	180 446 48 91	08/04 /19		08/04 /09	180 446 58 32	08/04 /09	180 446 59 18	08/04 /17

Refer to respective page of Spare Parts List for every part wanted

* = innovation

https://truckmanualshub.com/

Key to part numbers

Part-No.	Page	Part-No.	Page	Part-No.	Page	Part-No.	Page	Part-No.	Page
180 446 59 19	08/04 /06	180 446 59 46	08/04 /03		08/03 /04	180 447 00 23	08/04 /04	180 448 22 21	08/03 /04
180 446 59 20	08/04 /02	180 446 59 47	08/04 /03	180 446 63 19	08/03 /04	180 447 00 24	08/04 /04	180 448 22 22	08/03 /04
180 446 59 21	08/04 /02	180 446 59 48	08/04 /03	180 446 63 21	08/03 /04	180 447 00 25	08/04 /04	180 448 22 24	08/03 /04
180 446 59 22	08/04 /02	180 446 59 49	08/04 /03	180 446 93 01	08/01 /05	180 447 00 26	08/04 /04	180 448 22 25	08/03 /04
180 446 59 23	08/04 /02	180 446 59 50	08/04 /03	180 447 00 00	08/04 /03	180 447 00 27	08/04 /04	180 448 22 26	08/03 /04
180 446 59 24	08/04 /02	180 446 59 51	08/04 /18	180 447 00 01	08/04 /03	180 447 00 28	08/04 /04	180 448 22 29	08/03 /04
180 446 59 25	08/04 /02	180 446 59 52	08/04 /18	180 447 00 02	08/04 /03	180 447 00 29	08/04 /04	180 448 22 32	08/03 /04
180 446 59 26	08/04 /02	180 446 59 53	08/04 /18	180 447 00 03	08/04 /03	180 447 00 30	08/04 /04	180 448 22 33	08/03 /04
180 446 59 27	08/04 /02	180 446 59 54	08/04 /18	180 447 00 04	08/04 /03	180 447 00 31	08/04 /19	180 448 22 35	08/03 /04
180 446 59 28	08/04 /02	180 446 59 55	08/04 /18	180 447 00 05	08/04 /03	180 447 00 32	08/04 /19	180 448 22 37	08/03 /04
180 446 59 29	08/04 /02	180 446 59 56	08/04 /18	180 447 00 06	08/04 /03	180 447 00 33	08/04 /19	180 448 22 57	08/03 /05
180 446 59 30	08/04 /02	180 446 59 57	08/04 /18	180 447 00 07	08/04 /03	180 447 00 34	08/04 /19	180 448 22 58	08/03 /05
180 446 59 31	08/04 /02	180 446 59 58	08/04 /18	180 447 00 08	08/04 /03	180 447 00 35	08/04 /19	180 448 22 60	08/03 /05
180 446 59 32	08/04 /02	180 446 59 59	08/04 /18	180 447 00 09	08/04 /03	180 447 00 36	08/04 /19	180 448 22 61	08/03 /05
180 446 59 33	08/04 /02	180 446 59 60	08/04 /18	180 447 00 10	08/04 /03	180 447 00 37	08/04 /19	180 448 22 62	08/03 /05
180 446 59 34	08/04 /02	180 446 59 61	08/04 /18	180 447 00 11	08/04 /03	180 447 00 38	08/04 /19	180 448 22 65	08/03 /05
180 446 59 35	08/04 /02	180 446 59 62	08/04 /18	180 447 00 12	08/04 /03	180 447 00 39	08/04 /19	180 448 22 68	08/03 /05
180 446 59 36	08/04 /02	180 446 59 63	08/04 /18	180 447 00 13	08/04 /03	180 447 00 40	08/04 /19	180 448 22 69	08/03 /05
180 446 59 37	08/04 /02	180 446 59 64	08/04 /18	180 447 00 14	08/04 /03	180 447 00 41	08/04 /19	180 448 22 71	08/03 /05
180 446 59 38	08/04 /02	180 446 59 65	08/04 /18	180 447 00 15	08/04 /03	180 447 00 42	08/04 /19	180 448 22 73	08/03 /05
180 446 59 39	08/04 /02	180 446 59 66	08/04 /18	180 447 00 16	08/04 /04	180 447 00 43	08/04 /19	180 448 35 01	08/01 /04
180 446 59 40	08/04 /03	180 446 59 67	08/04 /18	180 447 00 17	08/04 /04	180 447 00 44	08/04 /20		08/02 /03
180 446 59 41	08/04 /03	180 446 59 68	08/04 /18	180 447 00 18	08/04 /04	180 447 00 45	08/04 /20		08/03 /04
180 446 59 42	08/04 /03	180 446 59 69	08/04 /18	180 447 00 19	08/04 /04	180 447 00 46	08/04 /20	180 448 41 06	08/01 /03
180 446 59 43	08/04 /03	180 446 63 15	08/02 /03	180 447 00 20	08/04 /04	180 447 00 47	08/04 /20	180 448 41 07	08/02 /03
180 446 59 44	08/04 /03		08/03 /04	180 447 00 21	08/04 /04	180 447 00 48	08/04 /20		08/03 /04
180 446 59 45	08/04 /03	180 446 63 18	08/02 /03	180 447 00 22	08/04 /04	180 447 00 49	08/04 /20	180 448 41 09	08/08 /01

Refer to respective page of Spare Parts List for every part wanted

* = innovation

https://truckmanualshub.com/

Key to part numbers

Part-No.	Page	Part-No.	Page	Part-No.	Page	Part-No.	Page	Part-No.	Page
	08/08A /02	183 446 03 00	08/08 /01	262 320 00 00	02/04 /01	292 323 05 02	02/04 /01	330 433 13 00	03/04 /01
180 448 41 10	08/08 /01		08/09 /01	262 320 99 00	02/07 /01	300 232 21 00	01/03 /02	335 360 60 29	06/11 /01
	08/08A /02		08/10 /01	262 323 01 03	02/04 /01	300 381 03 06	06/02 /01	335 360 60 30	06/11 /01
180 490 50 16	08/07 /01	183 446 09 02	08/08 /01	262 323 01 05	02/04 /01	300 430 83 00	09/01 /01	335 363 17 11	03/08 /05
180 490 50 17	08/07 /01		08/09 /01	262 324 02 03	02/04 /01	301 000 25 00	04/02 /01	335 363 18 10	03/08 /05
180 490 50 18	08/07 /01		08/10 /01	262 343 38 00	02/05 /02	301 450 13 02	04/02 /02	335 363 25 04	03/08 /05
180 490 50 19	08/07 /01	183 446 14 01	08/01 /04	262 343 51 01	02/05 /02	301 450 90 01	04/02 /02	335 363 25 05	03/08 /05
180 490 50 20	08/07 /01	183 446 56 00	08/08 /01	262 343 51 02	02/05 /02	301 451 04 01	04/02 /01	335 430 14 04	03/08 /05
180 490 50 21	08/07 /01		08/08A /01	262 343 51 03	02/05 /02	301 452 08 05	04/02 /02	335 431 19 03	05/03 /02
180 490 50 22	08/07 /01		08/09 /01	262 343 51 04	02/05 /02	301 453 02 10	04/02 /01	335 446 11 00	07/04 /01
180 490 50 24	08/07 /02		08/09A /01	262 343 51 05	02/05 /02	301 453 03 05	04/02 /01	335 446 41 00	07/04 /01
180 490 50 25	08/07 /02		08/10 /01	262 343 51 06	02/05 /02	301 454 02 15	04/02 /01	335 527 30 06	05/03 /01
180 490 50 26	08/07 /02		08/10A /01	262 343 51 07	02/05 /02	301 490 20 05	04/02 /02	335 527 30 07	05/03 /01
180 490 50 27	08/07 /02	186 446 12 07	08/08 /01	262 343 51 08	02/05 /02	301 491 01 02	04/02 /02	335 606 09 03	06/11 /02
180 490 50 28	08/07 /02		08/09 /01	262 343 51 09	02/05 /02	301 540 42 04	04/02 /02	337 433 56 00	03/04 /02
180 490 50 29	08/07 /02		08/10 /01	262 345 04 01	02/05 /02	301 540 42 15	04/02 /02	342 454 03 00	04/02 /01
180 490 50 30	08/07 /02	200 132 03 20	01/10 /03	291 320 04 07	02/01 /01	302 450 90 00	04/02 /01	350 030 15 00	01/03 /01
180 490 50 37	08/07 /01	200 351 32 00	01/10 /03	291 320 08 06	02/01 /02	322 433 03 00	03/05 /01	350 030 15 04	01/03 /01
180 490 50 38	08/07 /01	262 000 95 51	02/07 /01	291 323 14 07	02/01 /01		03/06 /01	350 030 15 06	01/03 /01
180 490 50 39	08/07 /01	262 000 95 59	02/07 /01	291 323 31 11	02/01 /01	322 437 82 00	03/08 /03	350 032 12 00	01/03 /01
180 490 50 40	08/07 /01	262 230 64 01	02/04 /01	291 323 31 12	02/01 /01	322 437 85 00	03/08 /03	350 105 10 00	01/04 /01
180 490 50 55	08/07 /01	262 231 14 00	02/04 /01	291 323 31 13	02/01 /02	324 421 19 02	03/01 /01	350 105 15 01	01/04 /03
181 445 05 00	08/01 /03	262 300 03 03	02/05 /01	291 323 31 14	02/01 /02	324 433 13 05	03/05 /01	350 106 02 00	01/04 /01
181 446 45 01	08/02 /02	262 301 00 06	02/04 /01	291 323 31 15	02/01 /02	324 433 14 00	03/05 /01	350 107 05 50	01/04 /01
	08/03 /02	262 301 40 02	02/05 /01	291 324 02 06	02/01 /02	324 433 26 11	03/05 /01	350 108 20 02	01/04 /02
183 441 09 00	08/06 /02	262 301 40 03	02/05 /01	291 343 51 05	02/01 /01	324 433 26 15	03/05 /01	350 108 20 09	01/04 /03
183 441 58 06	08/05 /02	262 305 12 00	02/05 /02	292 323 05 01	02/04 /01	324 433 66 00	03/05 /01		01/08 /02

Refer to respective page of Spare Parts List for every part wanted

* = innovation

https://truckmanualshub.com/

Key to part numbers

Part-No.	Page	Part-No.	Page	Part-No.	Page	Part-No.	Page	Part-No.	Page
350 108 20 11	01/04 /02	350 179 00 00	01/08 /01	350 360 60 19	06/08 /01	350 363 19 01	01/12 /02	350 381 03 54	06/12 /01
350 108 20 21	01/04 /02		01/09 /01	350 360 60 20	06/08 /01	350 363 25 03	01/12 /02	350 381 03 55	06/12 /02
350 108 20 26	01/04 /02	350 202 05 01	05/01 /01	350 360 60 21	06/08 /02	350 363 25 08	06/08 /02	350 381 03 56	06/12 /02
350 108 20 31	01/04 /02	350 210 01 02	01/03 /02	350 360 60 22	06/08 /02	350 363 25 09	01/11 /01	350 381 03 57	06/06 /02
350 108 20 36	01/04 /02	350 210 20 10	01/03 /03	350 360 60 24	06/08 /01	350 363 25 11	01/13 /02	350 381 03 60	06/15 /01
	01/08 /02	350 212 04 05	01/03 /03	350 360 60 25	06/08 /01	350 363 42 02	06/01 /03	350 381 03 63	06/14 /01
350 108 20 41	01/08 /01	350 221 05 02	01/03 /01	350 360 64 03	01/03 /03	350 363 42 04	03/01 /02	350 381 03 66	06/15 /01
	01/09 /01	350 221 05 07	01/03 /01	350 363 01 05	06/08 /01	350 363 42 07	06/01 /03	350 381 03 67	06/15 /01
350 108 20 42	01/04 /02	350 231 14 09	01/03 /02	350 363 12 00	06/02 /01	350 363 42 09	06/01 /04	350 381 03 68	06/15 /01
	03/10 /02	350 232 22 00	01/03 /02	350 363 14 09	06/01 /01	350 363 42 11	01/09 /03	350 381 03 70	06/15 /01
350 110 05 02	01/04 /01	350 350 50 00	01/03 /01	350 363 14 17	01/03 /01	350 363 42 16	06/09 /03	350 381 03 71	06/15 /01
350 110 11 01	01/02 /01	350 357 05 00	01/04 /01	350 363 14 28	07/03 /02	350 363 42 18	03/01 /03	350 381 03 78	03/10 /01
350 116 15 00	01/04 /01	350 360 04 00	01/12 /02	350 363 14 29	05/01 /02	350 380 95 00	01/08 /03	350 381 03 79	06/15 /01
350 116 15 10	01/04 /01	350 360 04 01	01/13 /02	350 363 14 31	03/01 /02		01/09 /04	350 381 03 80	06/14A /01
350 116 15 15	01/04 /01	350 360 60 01	06/01 /05	350 363 14 32	06/10 /01	350 381 03 15	01/14 /02	350 381 03 81	06/14A /01
350 116 42 00	01/04 /01	350 360 60 02	06/11 /03	350 363 14 37	01/13 /03		06/14 /02	350 381 03 82	06/14A /01
350 116 42 06	01/04 /01	350 360 60 04	01/12 /02	350 363 14 38	01/05 /03	350 381 03 29	06/14 /02	350 381 03 86	06/15 /01
350 116 42 10	01/04 /01	350 360 60 06	01/12 /01	350 363 14 39	06/10 /02	350 381 03 35	06/04 /01	350 381 03 88	06/16 /01
350 171 11 00	01/08 /01		01/13 /01	350 363 14 41	05/03 /06	350 381 03 36	03/08 /06	350 381 03 89	06/07 /02
	01/09 /01	350 360 60 10	06/09 /01	350 363 14 42	05/03 /06	350 381 03 37	06/12 /01	350 381 03 91	06/08 /02
350 172 02 15	01/07 /01		06/08 /01	350 363 14 43	05/03 /05	350 381 03 38	06/12 /01	350 381 03 92	06/13 /01
350 172 10 01	01/09 /02	350 360 60 13	03/01 /03	350 363 14 55	06/02 /01	350 381 03 39	06/12 /01	350 381 03 93	06/15 /01
350 173 11 04	01/11 /01	350 360 60 14	06/11 /01	350 363 14 57	06/11 /01	350 381 03 40	06/12 /01	350 381 05 03	06/12 /02
350 173 18 01	01/02 /01	350 360 60 15	06/11 /01	350 363 14 58	06/11 /02	350 381 03 46	06/13 /01	350 381 05 34	06/06 /01
350 173 18 02	01/02 /01	350 360 60 16	01/08 /03	350 363 14 59	05/03 /06	350 381 03 52	06/14 /01	350 381 05 45	06/12 /02
350 173 18 06	01/02 /01		01/09 /03	350 363 19 00	01/12 /02	350 381 03 53	01/08 /03	350 381 05 53	06/04 /01
350 173 18 07	01/02 /01	350 360 60 18	06/10 /01		01/13 /02		01/09 /04	350 381 05 54	06/05 /01

Refer to respective page of Spare Parts List for every part wanted

* = innovation

https://truckmanualshub.com/

Key to part numbers

Part-No.	Page	Part-No.	Page	Part-No.	Page	Part-No.	Page	Part-No.	Page
350 381 05 55	06/03 /01	350 430 22 05	03/08 /05	350 432 03 00	01/07 /02	350 436 29 43	03/02 /02	350 440 14 15	04/01 /02
350 381 05 56	06/03 /01	350 430 26 02	03/02 /03	350 432 05 06	03/03 /01	350 436 35 02	06/09 /03	350 440 14 18	04/01 /02
350 381 05 57	06/04 /01	350 430 30 00	03/02 /01	350 432 05 09	03/03 /01		06/11 /03	350 440 14 23	07/01 /02
350 381 05 58	06/05 /01	350 430 30 08	03/02 /01	350 432 05 12	03/03 /01	350 436 35 10	01/07 /02	350 440 30 00	05/04 /01
350 381 05 59	06/03 /01	350 430 30 09	03/02 /01	350 432 08 02	03/02 /03	350 436 45 00	09/01 /02	350 440 30 06	03/01 /01
350 381 05 60	06/04 /01	350 430 30 12	03/02 /01	350 432 08 03	03/09 /01	350 437 62 00	03/08 /04	350 440 30 07	03/01 /01
350 381 05 61	06/05 /01	350 430 65 15	03/08 /01	350 432 08 04	03/09 /01	350 437 62 01	03/08 /04	350 440 31 00	07/04 /01
350 381 10 00	06/06 /01		03/08 /01		03/10 /02	350 437 63 00	03/08 /01	350 440 31 01	07/04 /01
350 381 10 01	06/07 /01	350 430 65 17	03/08 /02	350 432 13 15	03/02 /03	350 437 78 10	03/08 /04	350 440 80 09	07/04 /01
350 381 10 02	06/07 /01	350 430 65 20	03/08 /01	350 432 24 04	03/02 /01	350 437 90 00	03/08 /01	350 440 80 16	07/04 /01
350 400 09 00	08/01 /05		03/08 /01	350 432 24 05	03/03 /01	350 437 90 02	03/08 /03	350 441 20 00	07/01 /03
350 400 09 01	08/01 /05	350 430 65 25	03/08 /01	350 432 24 06	03/02 /01	350 437 90 03	03/08 /03	350 441 48 04	07/01 /03
350 400 30 07	03/01 /01	350 430 65 30	03/08 /01	350 432 24 10	03/03 /01	350 437 90 04	03/08 /03	350 441 58 01	07/03 /02
350 400 44 05	03/01 /01		03/08 /02	350 432 45 02	03/08 /05	350 437 90 05	03/08 /03	350 441 65 07	05/04 /01
350 420 28 05	06/01 /01	350 430 65 35	03/08 /01	350 432 45 03	03/08 /05	350 437 90 06	03/08 /03	350 441 65 08	05/04 /01
350 420 50 01	06/01 /04	350 430 70 01	03/01 /02	350 432 45 04	03/08 /05	350 437 90 07	03/08 /03	350 441 65 13	05/04 /01
350 420 50 08	01/02 /01	350 430 70 04	03/01 /02	350 433 10 04	03/05 /01	350 437 90 09	03/08 /02	350 441 65 14	05/04 /01
350 420 50 11	01/02 /01	350 430 95 00	03/02 /03	350 433 10 06	03/04 /01	350 437 91 01	03/08 /02	350 441 70 01	07/03 /02
350 420 60 03	07/02 /01	350 431 15 01	03/02 /02	350 433 10 07	03/04 /01	350 437 91 02	03/08 /02	350 446 01 02	07/04 /01
350 423 02 01	06/01 /02	350 431 15 04	03/02 /02	350 433 23 00	03/08 /04	350 437 91 03	03/08 /01	350 446 03 03	07/04 /01
	06/01 /04	350 431 18 00	09/01 /01	350 433 34 00	03/06 /01	350 437 92 00	03/08 /01	350 446 10 00	08/01 /05
350 423 02 02	06/01 /03	350 431 30 16	03/02 /01	350 433 34 01	03/06 /01	350 437 92 01	03/08 /02		08/02 /04
350 430 06 01	03/02 /01	350 431 30 17	03/02 /02	350 436 15 21	06/09 /03	350 437 92 02	03/08 /03		08/03 /06
350 430 14 01	03/02 /02	350 431 30 18	03/02 /02	350 436 28 01	01/07 /02	350 438 02 00	05/03 /03	350 446 10 01	07/04 /01
350 430 14 02	03/02 /02	350 431 30 19	03/02 /02	350 436 28 30	01/07 /02	350 440 14 04	07/01 /02	350 448 35 13	07/01 /02
350 430 14 05	03/02 /03	350 431 30 20	03/02 /02	350 436 29 02	03/02 /02	350 440 14 09	04/01 /02	350 448 35 23	07/03 /01
350 430 22 00	03/08 /05	350 431 30 21	03/02 /02	350 436 29 40	03/02 /02	350 440 14 10	04/01 /03	350 448 35 24	07/03 /01

Refer to respective page of Spare Parts List for every part wanted

* = innovation

https://truckmanualshub.com/

Key to part numbers

Part-No.	Page	Part-No.	Page	Part-No.	Page	Part-No.	Page	Part-No.	Page
350 448 35 25	07/03 /01	350 448 40 06	07/02 /01	350 527 29 01	05/03 /06	350 570 52 02	01/05 /01	350 580 01 02	01/12 /01
350 448 35 27	07/01 /01	350 448 40 40	07/02 /01	350 527 46 00	05/03 /01	350 570 52 12	01/05 /01		01/13 /01
350 448 35 28	07/03 /02	350 448 41 06	07/02 /02	350 527 46 01	05/03 /01	350 570 52 13	01/08 /02	350 580 01 13	01/12 /01
350 448 35 29	04/01 /02	350 448 41 10	07/02 /02	350 527 47 00	05/03 /01		01/09 /02		01/13 /01
350 448 35 30	08/05 /01	350 448 41 11	07/02 /02	350 528 01 00	05/04 /01	350 571 01 05	01/05 /01	350 580 06 06	01/12 /01
	08/06 /01	350 448 41 12	07/02 /02	350 528 01 05	05/04 /03	350 571 10 04	01/10 /01		01/13 /01
	08/07 /01	350 448 41 13	07/02 /02	350 528 01 10	05/04 /03	350 571 10 30	01/10 /02	350 580 10 11	01/14 /01
350 448 35 31	08/05 /01	350 520 26 01	05/03 /01	350 528 01 15	05/04 /03	350 571 14 04	01/08 /02	350 580 10 12	01/14 /01
	08/06 /01	350 520 56 05	05/03 /01	350 528 01 20	05/04 /03		01/09 /02	350 580 35 04	01/12 /01
	08/07 /01	350 520 56 06	05/03 /01	350 542 10 00	04/01 /01	350 571 23 00	01/10 /03	350 580 35 06	01/12 /01
350 448 35 32	08/05 /01	350 520 56 08	05/03 /01	350 542 10 01	04/01 /01		03/02 /03		01/13 /01
	08/06 /01	350 520 63 00	05/03 /01		04/01 /01	350 572 14 02	01/08 /01	350 580 90 00	01/14 /01
	08/07 /01	350 520 63 02	05/03 /01	350 542 10 80	04/01 /01	350 572 14 03	01/09 /01	350 581 01 06	01/07 /02
350 448 35 33	08/05 /01	350 520 71 06	05/01 /01	350 542 10 81	04/01 /01	350 572 18 01	01/08 /01	350 581 01 12	01/07 /01
	08/06 /01	350 522 06 00	05/03 /02	350 542 12 00	04/01 /01		01/09 /01	350 581 01 18	01/07 /01
350 448 35 37	08/07 /01	350 522 14 01	05/03 /06	350 542 12 02	04/01 /01	350 572 22 02	01/09 /02	350 581 01 19	01/07 /01
350 448 35 38	07/03 /01	350 527 02 07	05/01 /01	350 542 12 03	04/01 /01	350 572 29 00	01/08 /02	350 582 14 00	01/07 /01
350 448 35 39	07/03 /01	350 527 02 09	05/03 /06		04/01 /01		01/09 /02	350 584 01 01	03/09 /01
350 448 35 40	07/03 /01	350 527 02 11	05/03 /06	350 542 12 80	04/01 /01	350 572 29 01	01/08 /01	350 584 01 02	03/10 /01
350 448 35 41	07/01 /02		05/03 /06	350 542 12 83	04/01 /01		01/09 /01	350 584 03 00	03/09 /01
350 448 35 42	07/03 /02	350 527 06 03	01/12 /03	350 570 11 14	01/10 /02	350 574 10 02	01/10 /01	350 584 03 01	03/10 /01
350 448 35 43	07/03 /01		01/12 /03	350 570 11 23	01/10 /02	350 574 10 03	01/10 /01	350 584 08 00	03/09 /02
350 448 35 44	07/03 /01		01/13 /03	350 570 11 26	01/10 /01	350 574 15 04	01/06 /01		03/10 /02
350 448 35 49	07/01 /01		03/01 /03	350 570 15 01	01/05 /01	350 574 15 06	01/06 /01	350 584 16 01	03/09 /02
350 448 35 50	07/03 /01		03/01 /03	350 570 15 05	01/06 /01	350 574 40 00	01/05 /01	350 584 35 03	03/09 /02
350 448 35 51	07/03 /01		06/11 /03	350 570 15 07	01/05 /01	350 574 40 10	01/05 /02		03/10 /02
350 448 40 03	07/02 /01	350 527 13 03	05/03 /02	350 570 20 00	01/05 /01	350 574 40 11	01/10 /02	350 584 35 04	03/10 /02

Refer to respective page of Spare Parts List for every part wanted

* = innovation

https://truckmanualshub.com/

Key to part numbers

Part-No.	Page	Part-No.	Page	Part-No.	Page	Part-No.	Page	Part-No.	Page
350 584 35 06	03/10 /02	350 602 05 17	04/03 /02	351 381 03 42	01/14 /01	351 433 42 00	03/04 /01	351 437 90 10	03/08 /01
350 586 01 00	01/07 /01	350 602 05 18	04/03 /02	351 381 03 67	03/10 /02	351 433 42 01	03/04 /02	351 437 95 00	03/08 /03
350 586 01 05	01/07 /01	350 602 07 00	04/03 /02	351 381 04 14	01/06 /01		03/07 /01	351 438 02 01	05/03 /03
350 586 01 06	01/07 /01	350 610 08 03	03/02 /02	351 423 02 00	06/01 /02	351 433 66 01	03/04 /02	351 438 02 02	05/03 /03
350 586 01 08	01/07 /01	350 610 08 04	03/02 /02	351 430 75 02	06/11 /01		03/07 /01	351 438 02 10	05/03 /03
350 586 01 09	01/07 /01	350 610 08 06	03/02 /02	351 431 22 00	03/01 /02	351 433 73 00	03/04 /01	351 438 02 21	05/03 /03
350 586 01 10	01/07 /01	350 610 08 07	03/02 /02	351 433 05 01	03/04 /01	351 433 75 00	03/04 /01	351 438 02 26	05/03 /03
350 586 01 11	01/07 /01	350 613 03 08	03/01 /01		03/07 /01	351 433 80 02	03/04 /02	351 446 83 00	07/01 /01
350 586 01 12	01/07 /01	350 613 03 09	03/01 /01	351 433 07 00	03/04 /01		03/07 /01	351 446 83 05	07/01 /01
350 586 01 14	01/07 /01	350 613 03 10	03/01 /01	351 433 07 05	03/04 /01	351 433 80 03	03/04 /02	351 510 07 00	05/03 /04
350 586 09 02	01/14 /02	350 613 03 13	03/01 /01	351 433 07 10	03/04 /01		03/07 /01	351 527 30 05	05/04 /02
350 586 09 04	01/12 /03	350 613 03 18	03/01 /01	351 433 10 16	03/04 /01	351 433 80 04	03/04 /02	351 527 30 11	05/04 /02
	01/13 /03	350 616 05 01	03/02 /03	351 433 10 17	03/04 /01		03/07 /01	351 528 10 00	05/03 /04
350 586 10 03	01/12 /02	350 616 44 01	03/02 /03	351 433 10 18	03/07 /01	351 433 80 05	03/04 /02	351 528 10 11	05/04 /02
	01/13 /01	351 108 20 17	01/09 /03	351 433 10 22	03/07 /01		03/07 /01	351 528 10 16	05/04 /02
350 586 16 01	01/14 /01	351 360 60 23	06/11 /01	351 433 10 49	03/06 /01	351 433 85 00	03/05 /01	351 528 10 35	05/04 /01
350 586 18 00	01/12 /01	351 360 60 24	06/11 /01	351 433 12 01	03/04 /01	351 433 85 01	03/04 /02	351 542 10 04	04/01 /01
	01/13 /01	351 363 01 07	06/10 /01	351 433 14 00	03/04 /02		03/07 /01	351 542 10 84	04/01 /01
350 586 22 00	01/14 /01	351 363 14 26	03/01 /03		03/07 /01		03/06 /01	351 572 20 00	01/08 /01
350 586 22 02	01/14 /01	351 363 14 37	06/09 /03	351 433 18 01	03/04 /01	351 433 90 00	03/04 /02		01/09 /01
350 589 01 02	01/14 /01	351 363 14 38	06/09 /03		03/07 /01		03/07 /01	351 574 15 13	01/06 /01
350 589 01 03	01/14 /01	351 363 25 03	06/10 /01	351 433 18 02	03/04 /01	351 436 29 05	06/09 /01	351 574 40 05	01/10 /01
350 600 15 00	09/01 /01	351 363 42 01	06/09 /03		03/07 /01	351 436 29 06	06/09 /01	351 584 10 08	03/10 /01
350 602 05 01	04/03 /02	351 363 42 08	01/04 /03	351 433 18 15	03/05 /01	351 437 50 00	03/08 /04	351 584 16 16	03/10 /01
350 602 05 03	04/03 /02		01/10 /01	351 433 18 20	03/05 /01	351 437 73 00	03/08 /01	351 586 02 05	01/14 /01
350 602 05 04	04/03 /02	351 363 42 22	06/11 /01	351 433 34 00	03/05 /01	351 437 74 00	03/08 /04	351 586 23 03	01/14 /01
350 602 05 06	04/03 /02	351 363 42 23	06/11 /01	351 433 34 01	03/05 /01	351 437 78 00	03/08 /04	352 381 03 02	03/09 /01

Refer to respective page of Spare Parts List for every part wanted

* = innovation

https://truckmanualshub.com/

Key to part numbers

Part-No.	Page	Part-No.	Page	Part-No.	Page	Part-No.	Page	Part-No.	Page
352 381 03 03	03/09 /01	390 360 13 78	06/02 /01	505 323 15 07	02/01 /01		06/10 /02	7 9125 00 249	03/08 /06
	03/09 /02	390 360 13 79	06/02 /01	505 331 09 02	02/01 /02		06/16 /01		06/06 /01
352 381 03 46	03/08 /06	390 360 13 98	06/02 /01	505 504 13 02	02/01 /01	7 3792 00 155	03/08 /01		06/07 /01
352 430 26 13	06/09 /04	390 360 13 99	06/02 /01	505 504 13 04	02/01 /01		03/08 /02		06/16 /01
352 430 46 00	09/01 /02	390 360 43 04	06/01 /03	505 504 55 05	02/01 /01		03/08 /02	7 9125 00 250	06/06 /01
352 432 05 46	04/01 /03	390 360 51 06	06/02 /01	505 504 55 07	02/01 /01	7 7244 00 000	10/03 /01		06/07 /01
352 438 02 00	05/03 /03	390 360 58 04	06/01 /03	506 323 19 02	02/06 /01	7 9106 00 050	06/14 /02	7 9125 00 254	06/03 /01
352 438 02 01	05/03 /03	390 360 58 15	06/01 /03	584 340 27 00	02/06 /01	7 9106 00 056	06/03 /01	7 9125 00 255	06/12 /01
352 438 02 02	06/02 /01	390 360 58 66	06/01 /03	584 340 27 06	02/06 /01		06/04 /01		06/14A /01
352 572 90 20	01/08 /02	390 360 63 41	01/13 /02	584 340 27 91	02/06 /01		06/05 /01	7 9125 00 256	06/03 /02
	01/09 /02	390 360 83 04	06/01 /03	584 340 37 32	02/06 /01		06/06 /02		06/14 /02
352 584 17 00	03/09 /01	390 360 83 66	06/01 /03	600 340 50 80	02/05 /02		06/08 /02		06/14A /02
	03/10 /01	390 365 05 05	01/12 /02	674 340 61 00	05/03 /05		06/12 /01	7 9125 00 257	06/03 /02
353 363 14 01	06/01 /03	392 431 19 00	05/03 /02	674 340 61 02	05/03 /05		06/13 /01		06/04 /02
353 363 14 68	01/10 /03	392 433 85 00	03/04 /02	674 340 61 10	05/03 /05		06/14 /01		06/05 /02
353 363 14 81	06/08 /01	392 527 36 08	05/03 /01	674 341 01 02	05/03 /05		06/14A /01		06/06 /02
353 437 62 20	09/01 /02	392 571 20 47	01/10 /02	674 343 38 03	05/03 /05		06/15 /02		06/07 /02
353 438 11 03	06/02 /01	394 446 10 00	08/01 /05	674 343 38 04	05/03 /05		06/07 /02	7 9125 00 258	06/06 /02
390 360 13 02	06/01 /04	394 446 84 00	08/01 /05	674 345 04 04	05/03 /05	7 9125 00 242	06/03 /01		06/07 /02
390 360 13 04	06/01 /03	502 343 05 15	02/05 /03	7 0331 49 005	06/01 /05		06/04 /01	7 9125 00 260	01/06 /01
390 360 13 13	06/02 /01	505 000 85 00	02/03 /01	7 0331 49 015	06/01 /05		06/05 /01	7 9125 00 261	06/03 /02
390 360 13 14	06/02 /01	505 000 95 00	02/03 /01	7 2783 75 202	10/02 /01	7 9125 00 243	03/10 /02		06/04 /02
390 360 13 42	06/01 /03	505 260 40 00	02/01 /01	7 2783 75 721	10/02 /01		06/14 /02		06/05 /02
390 360 13 45	06/01 /04	505 264 11 02	02/01 /01	7 3263 00 602	10/02 /01		06/15 /01	7 9125 00 262	06/03 /02
390 360 13 46	06/01 /04	505 301 05 06	02/01 /02	7 3374 75 140	10/02 /01	7 9125 00 244	06/14 /02		06/04 /02
390 360 13 68	06/02 /01	505 320 99 01	02/03 /01	7 3780 00 021	01/06 /01	7 9125 00 248	06/04 /02		06/05 /02
390 360 13 69	06/02 /01	505 323 01 05	02/01 /01		06/15 /01		06/05 /01	7 9125 01 025	06/05 /03

Refer to respective page of Spare Parts List for every part wanted

* = innovation

https://truckmanualshub.com/

Key to part numbers

Part-No.	Page	Part-No.	Page	Part-No.	Page	Part-No.	Page	Part-No.	Page
7 9125 01 110	06/13 /01	7 9125 03 112	06/03 /03	7 9125 03 140	06/03 /01		06/06 /01	7 9125 03 462	06/14A /02
7 9125 01 112	06/13 /01		06/04 /03		06/04 /01		06/14A /02	7 9125 03 526	06/12 /01
7 9125 01 205	06/13 /01		06/05 /03		06/05 /01		06/07 /01		06/13 /01
7 9125 01 255	06/13 /01	7 9125 03 119	06/06 /01		06/14 /01	7 9125 03 150	03/08 /06		06/15 /01
7 9125 01 265	06/13 /01		06/07 /01		06/14A /01	7 9125 03 151	03/10 /02	7 9125 03 532	06/05 /03
7 9125 03 035	03/08 /06	7 9125 03 121	01/06 /01	7 9125 03 145	06/03 /01		06/09 /03	7 9125 03 535	06/03 /02
7 9125 03 036	03/08 /06		06/05 /03		06/04 /01		06/08 /02		06/04 /02
7 9125 03 044	03/08 /06	7 9125 03 122	01/10 /02		06/05 /01		06/11 /02		06/05 /02
7 9125 03 071	06/07 /03		06/03 /01		06/15 /02		06/12 /01	7 9125 03 649	06/14 /02
7 9125 03 072	06/07 /02		06/04 /01		06/07 /02		06/15 /01	7 9125 03 688	06/12 /01
7 9125 03 080	06/03 /03		06/05 /01	7 9125 03 146	06/03 /01		06/15 /01		06/14 /01
	06/04 /03		06/13 /01		06/03 /01		06/07 /02	7 9125 03 752	06/06 /01
	06/05 /03		06/14A /01		06/04 /01	7 9125 03 173	06/03 /01		06/07 /01
7 9125 03 081	06/03 /03	7 9125 03 123	06/03 /01		06/04 /01		06/04 /01	7 9125 03 753	01/06 /01
	06/04 /03		06/04 /01		06/05 /01		06/05 /01		01/10 /02
	06/05 /03		06/05 /01		06/05 /01	7 9125 03 180	06/06 /01		05/01 /01
7 9125 03 101	06/08 /02		06/06 /01		06/14 /01		06/14 /02		05/02 /01
	06/12 /01		06/14A /02		06/14A /01		06/14A /02		05/03 /03
	06/13 /01		06/07 /01	7 9125 03 147	06/03 /01		06/07 /01		06/06 /02
	06/15 /01	7 9125 03 126	06/04 /02		06/04 /01	7 9125 03 320	06/03 /03		06/13 /01
	06/10 /01		06/05 /02		06/05 /01		06/04 /03		06/14A /02
	06/10 /01	7 9125 03 133	06/05 /03		06/13 /01		06/05 /03		06/07 /02
	06/07 /02		06/14 /01		06/14 /01	7 9125 03 322	06/03 /03	7 9125 03 770	06/14A /01
7 9125 03 102	06/12 /01		06/14 /02		06/14A /01		06/04 /03	7 9125 03 811	01/06 /01
	06/13 /01		06/14A /01		06/16 /01		06/05 /03	7 9125 03 815	06/03 /01
	06/15 /01	7 9125 03 134	06/05 /03	7 9125 03 149	05/03 /03	7 9125 03 420	06/14A /02		06/04 /01
7 9125 03 104	03/08 /06		06/14 /01		06/05 /03	7 9125 03 452	06/07 /03		06/05 /01

Refer to respective page of Spare Parts List for every part wanted

* = innovation

https://truckmanualshub.com/

Key to part numbers

Part-No.	Page	Part-No.	Page	Part-No.	Page	Part-No.	Page	Part-No.	Page
7 9125 03 816	06/15 /02	7 9125 03 923	03/08 /06		05/02 /01		06/04 /02	7 9125 15 007	06/06 /01
	06/07 /02	7 9125 04 058	06/06 /01		06/03 /02		06/05 /02		06/14 /02
7 9125 03 817	05/01 /01		06/07 /01		06/04 /02		06/14A /01		06/14A /01
	05/02 /01	7 9125 06 052	06/04 /02		06/05 /02	7 9125 11 383	06/12 /01		06/07 /01
7 9125 03 835	06/03 /01		06/05 /02		06/06 /01	7 9125 12 212	06/03 /02	7 9125 15 503	06/03 /01
	06/03 /01	7 9125 11 115	06/03 /01		06/12 /01		06/04 /02		06/04 /01
	06/04 /01		06/04 /01		06/14 /01		06/05 /02		06/05 /01
	06/04 /01		06/05 /01		06/14A /01	7 9125 12 242	06/03 /02		06/14 /02
	06/05 /01		06/06 /02		06/15 /01		06/04 /02		06/14A /02
	06/05 /01		06/08 /02		06/15 /01		06/05 /02	7 9125 15 504	06/06 /02
	06/07 /02		06/12 /01		06/07 /01		06/06 /01		06/14 /02
	07/01 /02		06/13 /01	7 9125 11 319	06/14A /01		06/14 /01		06/14A /01
7 9125 03 844	06/14A /01		06/14 /01	7 9125 11 325	06/03 /02		06/14A /02		06/14A /02
7 9125 03 846	06/12 /01		06/14A /02		06/04 /02		06/07 /01		06/07 /01
7 9125 03 847	06/12 /01		06/15 /01		06/05 /02	7 9125 15 001	06/14 /02	7 9125 15 510	03/08 /06
	06/13 /01		06/07 /02		06/06 /01	7 9125 15 002	06/03 /01	7 9125 33 011	06/07 /02
7 9125 03 848	03/10 /02		06/16 /01		06/12 /02		06/04 /01	7 9125 33 210	06/07 /02
	06/15 /01	7 9125 11 303	03/08 /06		06/14 /01		06/05 /01	7 9125 33 330	06/07 /02
7 9125 03 850	06/15 /02	7 9125 11 308	03/08 /06		06/07 /01		06/14 /02	7 9125 33 410	06/07 /02
	06/10 /01		06/03 /02	7 9125 11 365	06/08 /02		06/14A /02	7 9125 33 702	06/03 /03
	06/10 /01		06/04 /02		06/14 /01	7 9125 15 003	06/14 /02		06/04 /03
7 9125 03 856	06/15 /02		06/05 /02		06/14A /02	7 9125 15 004	06/03 /02		06/05 /03
7 9125 03 887	06/06 /01		06/14 /01		06/15 /02		06/04 /02	7 9125 33 706	06/03 /03
	06/07 /01	7 9125 11 315	01/06 /01	7 9125 11 366	06/03 /02		06/05 /02		06/04 /03
7 9125 03 893	06/08 /02		03/08 /06		06/04 /02		06/14 /02		06/05 /03
7 9125 03 895	06/12 /01		03/10 /02		06/05 /02		06/14A /02	7 9133 00 401	01/14 /02
7 9125 03 896	06/12 /01		05/01 /01	7 9125 11 369	06/03 /02	7 9125 15 005	06/14 /02	7 9145 90 532	06/01 /05

Refer to respective page of Spare Parts List for every part wanted

* = innovation

https://truckmanualshub.com/

Key to part numbers

Part-No.	Page	Part-No.	Page	Part-No.	Page	Part-No.	Page	Part-No.	Page
7 9149 50 160	01/12 /04		05/02 /01		06/05 /03		01/13 /02	7 9162 91 040	06/01 /01
7 9149 50 921	01/12 /04		05/03 /03		06/06 /02	7 9154 90 527	06/08 /02	7 9162 91 264	01/12 /02
7 9149 50 922	01/03 /03		06/03 /01		06/14A /02	7 9154 90 528	06/09 /01		06/01 /01
	01/04 /03		06/04 /01		06/07 /02		06/11 /02		06/01 /01
	01/12 /02		06/05 /01	7 9149 99 024	06/14A /01	7 9154 91 007	01/09 /02	7 9162 99 055	01/08 /03
	01/13 /01		06/06 /01		06/07 /02		01/10 /01		01/09 /04
7 9149 90 636	06/09 /01		06/13 /01	7 9149 99 025	05/03 /03	7 9154 91 014	01/09 /02	7 9162 99 061	01/14 /02
	06/12 /01		06/13 /01		06/03 /01		01/10 /01	7 9162 99 071	06/01 /03
7 9149 90 749	06/08 /01		06/14 /01		06/04 /01	7 9154 91 065	07/01 /02	7 9162 99 084	01/12 /02
	06/08 /02		06/14A /01		06/05 /01	7 9154 91 066	07/01 /02		06/11 /03
7 9149 90 765	06/08 /02		06/15 /02		06/06 /01	7 9154 92 600	06/02 /01	7 9162 99 960	06/03 /03
	06/08 /02		06/07 /01		06/13 /01	7 9154 95 003	01/04 /02		06/04 /02
7 9149 90 927	01/12 /02		06/16 /01		06/13 /01	7 9154 95 510	03/10 /01		06/05 /02
7 9149 90 928	06/10 /01	7 9149 99 020	06/03 /01		06/14 /02	7 9154 99 909	03/04 /02		06/06 /01
	06/10 /02		06/04 /01		06/14A /01	7 9159 99 210	06/01 /01		06/14 /01
7 9149 90 981	06/11 /03		06/05 /01		06/07 /01	7 9160 01 748	03/09 /02		06/14A /01
7 9149 96 000	06/03 /03		06/06 /01	7 9150 02 530	06/04 /02	7 9160 40 000	01/09 /03		06/07 /01
	06/04 /03		06/14 /01		06/05 /02		06/01 /01	7 9162 99 961	03/08 /06
	06/05 /03		06/14A /01	7 9150 06 002	06/14 /01	7 9160 40 010	06/01 /05		06/14 /01
7 9149 96 001	06/07 /02		06/07 /01	7 9150 06 008	06/03 /01		06/03 /02		06/14A /01
7 9149 99 012	06/06 /01	7 9149 99 022	01/10 /02		06/04 /01		06/04 /02	7 9164 00 157	06/01 /04
	06/07 /01		06/03 /01		06/05 /01		06/05 /02	7 9164 00 159	05/03 /02
7 9149 99 017	06/14A /01		06/04 /01	7 9150 06 016	06/03 /02	7 9160 40 014	06/01 /05	7 9172 92 511	06/01 /06
	06/07 /02		06/05 /01		06/04 /02		06/03 /02	7 9172 92 553	06/01 /01
7 9149 99 019	01/06 /01		06/13 /01		06/05 /02		06/04 /02	7 9174 15 509	01/06 /01
	01/10 /02		06/14A /01	7 9150 06 082	06/05 /03		06/05 /02	7 9174 15 518	01/10 /02
	05/01 /01	7 9149 99 023	05/03 /03	7 9154 90 525	01/12 /03	7 9162 91 022	06/01 /01	7 9174 15 563	05/03 /06

Refer to respective page of Spare Parts List for every part wanted

* = innovation

https://truckmanualshub.com/

Key to part numbers

Part-No.	Page	Part-No.	Page	Part-No.	Page	Part-No.	Page	Part-No.	Page
	07/01 /03	7 9190 86 809	01/12 /02	7 9195 64 902	06/09 /01		08/07 /01		06/02 /01
7 9174 15 580	07/01 /02		01/13 /02	7 9195 64 920	06/09 /01	9 007 311 193	06/01 /05	9 008 311 128	01/04 /01
7 9174 15 582	07/01 /02	7 9190 95 000	06/05 /03		06/09 /02	9 007 311 195	06/01 /05		01/07 /02
7 9174 15 613	01/10 /02	7 9190 95 001	06/14 /01	7 9195 64 921	06/09 /02		08/06 /02		01/09 /02
7 9189 11 955	03/10 /01	7 9190 95 006	01/12 /02	7 9195 64 937	01/13 /03	9 007 311 197	05/03 /02		01/12 /02
7 9189 15 201	01/12 /02		06/05 /03		06/09 /01	9 007 311 199	06/01 /02		01/13 /02
7 9189 15 217	01/13 /02		06/14 /01		06/08 /02	9 007 311 248	01/10 /01		05/03 /06
7 9189 15 225	06/09 /03	7 9190 95 010	06/03 /02	7 9195 64 945	06/08 /01	9 007 311 249	01/03 /02		06/01 /05
7 9189 15 240	06/09 /03		06/04 /02		06/11 /01	9 007 311 250	03/08 /04		06/08 /01
	06/11 /02		06/05 /02	7 9195 64 991	06/09 /02	9 007 311 256	01/10 /03		06/11 /01
7 9190 00 106	06/01 /01	7 9190 95 012	06/03 /02	7 9199 00 223	06/01 /02	9 007 311 306	01/02 /01		06/11 /02
7 9190 00 107	01/13 /02		06/04 /02	7 9199 00 235	06/01 /02		01/07 /01		06/11 /03
7 9190 20 926	06/14A /01		06/05 /02	7 9199 00 245	06/01 /04	9 007 311 308	08/01 /04		09/01 /01
7 9190 20 927	06/06 /01	7 9190 95 043	06/03 /02	7 9199 99 001	06/03 /02	9 007 311 310	09/02 /01	9 008 311 132	01/08 /02
	06/12 /01		06/04 /02		06/04 /03	9 007 311 316	01/11 /01		01/09 /02
	06/07 /01		06/05 /02		06/05 /03		06/08 /01		01/10 /03
7 9190 52 815	06/10 /01	7 9190 95 052	06/05 /03	7 9896 05 000	10/02 /01	9 008 311 045	05/03 /02		01/12 /01
7 9190 52 829	06/10 /01		06/14 /01	831 000 85 00	02/03 /01	9 008 311 068	01/12 /01		01/12 /03
7 9190 86 803	01/09 /04	7 9190 95 053	06/05 /03	831 260 35 00	02/02 /01		01/13 /01		01/13 /01
	01/12 /02		06/14 /01	831 260 45 00	02/02 /01		06/01 /05		01/13 /02
	01/13 /02	7 9190 95 110	06/03 /03	831 264 01 07	02/02 /01	9 008 311 095	01/09 /03		01/13 /03
	06/01 /01	7 9190 95 114	06/03 /03	831 264 08 05	02/02 /01	9 008 311 098	01/04 /01		03/02 /01
7 9190 86 805	06/01 /01	7 9190 95 257	01/07 /02	831 264 09 04	02/02 /01		05/01 /01		03/02 /03
7 9190 86 806	06/01 /01	7 9194 90 710	06/03 /03	831 264 10 03	02/02 /02	9 008 311 126	01/04 /01		06/01 /04
7 9190 86 807	01/12 /02	7 9195 00 953	06/09 /01	831 264 35 03	02/02 /01		01/12 /02		06/02 /01
	01/13 /02	7 9195 00 971	09/01 /01	9 007 311 142	08/05 /02		01/13 /02		06/11 /03
	06/01 /01	7 9195 18 905	06/10 /01		08/06 /01		01/13 /02		06/10 /01

Refer to respective page of Spare Parts List for every part wanted

* = innovation

https://truckmanualshub.com/

Key to part numbers

Part-No.	Page	Part-No.	Page	Part-No.	Page	Part-No.	Page	Part-No.	Page
9 008 311 135	01/12 /03		03/08 /04		06/08 /02	9 008 311 193	08/05 /03		08/09A /02
	01/13 /02		04/01 /03	9 008 311 183	01/03 /01		08/06 /03		08/10A /02
	03/02 /04		05/04 /01		01/06 /01		08/07 /05	9 008 311 298	01/12 /01
	06/10 /01		06/01 /02		01/11 /02		08/07 /05		01/13 /01
	09/01 /01		06/01 /03		03/04 /02	9 008 311 195	01/03 /03		03/01 /02
9 008 311 137	06/10 /01		06/01 /04		03/05 /01	9 008 311 233	07/02 /01		03/02 /02
9 008 311 138	05/03 /02		07/02 /02		03/07 /01		08/03 /06		07/03 /02
9 008 311 140	03/02 /03		08/02 /02		03/06 /01	9 008 311 236	01/04 /02	9 008 311 300	09/02 /01
	03/09 /02		08/03 /02		03/08 /04		03/02 /02	9 008 311 302	04/02 /01
	03/10 /02		08/06 /02		05/01 /01		05/03 /02	9 008 311 412	01/03 /03
9 008 311 147	07/01 /02		08/06 /04		05/03 /02		06/01 /05	9 008 311 531	03/01 /01
9 008 311 174	05/04 /01		08/07 /05		06/01 /03		08/02 /04	9 008 320 234	08/03 /06
	08/02 /04		09/01 /01	9 008 311 186	01/11 /01		08/03 /06	9 008 341 177	08/01 /02
	08/03 /06	9 008 311 180	01/04 /01		03/01 /01	9 008 311 239	03/01 /02	9 008 346 138	05/04 /02
	09/01 /02		01/04 /01		03/04 /02		03/02 /01		05/04 /03
9 008 311 175	01/04 /03		01/04 /03		03/07 /01		04/03 /02	9 008 346 190	08/01 /05
	05/04 /01		01/05 /01		03/08 /04		06/01 /05	9 008 350 177	08/02 /01
	06/08 /01		03/01 /03	9 008 311 188	03/01 /02	9 008 311 241	01/03 /03		08/03 /01
	07/03 /01		03/02 /02		03/08 /04		01/05 /01	9 008 610 065	01/13 /02
9 008 311 177	01/04 /01		03/02 /02		06/01 /02		03/02 /03		06/01 /01
	01/07 /01		03/05 /01		06/01 /04		05/01 /01	9 008 610 069	06/11 /03
	03/01 /02		03/06 /01		08/05 /03		06/02 /01	9 008 610 093	01/13 /02
	03/02 /02		03/06 /01		08/06 /03	9 008 311 244	05/03 /02		06/01 /01
	03/02 /02		05/04 /01		08/07 /05	9 008 311 291	08/08A /02	9 008 610 096	01/08 /03
	03/05 /01		06/09 /04	9 008 311 190	01/12 /03		08/09A /02		01/09 /04
	03/06 /01		06/11 /01		01/13 /03		08/10A /02		01/12 /02
	03/08 /02		06/11 /01		08/01 /05	9 008 311 293	08/08A /02		06/01 /03

Refer to respective page of Spare Parts List for every part wanted

* = innovation

https://truckmanualshub.com/

Key to part numbers

Part-No.	Page	Part-No.	Page	Part-No.	Page	Part-No.	Page	Part-No.	Page
	06/11 /03		03/10 /02		05/04 /01	9 045 316 142	08/07 /02		08/06 /02
	06/11 /03		06/09 /03	9 045 311 186	02/01 /02	9 045 316 175	03/04 /01		08/07 /02
	08/09 /02		06/09 /03	9 045 311 236	06/01 /03		08/02 /04		08/09A /02
	08/09A /02	9 045 311 065	05/03 /06		06/01 /03		08/02 /04		08/10A /02
	08/10 /02	9 045 311 135	01/10 /03		08/06 /02		08/03 /06	9 045 316 197	08/08 /02
	08/10A /02		07/01 /01		08/07 /04		08/03 /06		08/08A /02
9 008 610 126	10/03 /01		08/03 /05	9 045 311 239	02/05 /03		08/03 /06	9 045 316 211	06/01 /04
9 008 610 132	01/02 /02	9 045 311 138	01/08 /01	9 045 311 243	03/01 /02	9 045 316 183	08/05 /02	9 045 316 233	08/06 /03
	01/07 /02		01/09 /01	9 045 311 314	01/03 /02		08/05 /03		08/07 /04
	06/10 /01	9 045 311 177	01/08 /01	9 045 311 412	01/03 /03		08/06 /01	9 045 316 245	01/03 /02
	08/06 /04		01/09 /01	9 045 311 416	01/03 /02		08/06 /02	9 045 316 247	07/03 /01
9 008 613 105	06/01 /03		03/04 /01		04/02 /03		08/06 /02	9 045 316 293	08/01 /04
	06/01 /04		03/07 /01	9 045 316 074	05/03 /01		08/07 /04	9 045 316 298	08/08 /01
9 010 312 305	04/02 /03		05/04 /01	9 045 316 096	01/10 /04	9 045 316 186	01/08 /03		08/09 /01
9 010 312 406	07/02 /03		08/06 /03		05/03 /04		01/09 /03		08/10 /01
9 010 342 447	08/01 /02		08/07 /04	9 045 316 102	05/03 /06		02/06 /01	9 045 316 312	01/03 /02
9 010 346 448	08/01 /02	9 045 311 180	03/07 /01	9 045 316 125	07/01 /03		08/09 /02	9 045 316 318	01/03 /03
9 027 068 142	05/03 /01		04/01 /03	9 045 316 126	08/01 /02		08/09A /02	9 045 316 372	01/03 /02
9 027 311 183	01/10 /02		06/08 /01		08/07 /02		08/10 /02	9 045 317 302	07/02 /03
	01/10 /03		06/11 /03	9 045 316 132	01/04 /01		08/10A /02	9 045 336 132	02/02 /02
	06/01 /05		08/06 /02		01/10 /03	9 045 316 188	01/01 /01	9 045 341 245	02/03 /01
9 041 201 045	01/12 /02		08/07 /02		08/06 /02	9 045 316 190	08/09 /01	9 045 341 248	02/05 /02
9 041 201 046	06/01 /04		08/07 /04		08/06 /02		08/09A /02	9 045 341 295	07/04 /01
9 041 201 065	06/09 /01		08/07 /05		08/06 /03		08/10 /01	9 045 341 300	08/01 /04
	06/09 /01		08/08 /02		08/07 /02		08/10A /02	9 045 346 137	08/03 /05
	06/11 /02		08/08A /02		08/07 /02	9 045 316 195	08/01 /02	9 045 348 186	02/06 /01
9 041 201 098	03/09 /01	9 045 311 183	01/01 /01	9 045 316 138	08/05 /03		08/05 /02	9 045 371 131	08/08 /01

Refer to respective page of Spare Parts List for every part wanted

* = innovation

https://truckmanualshub.com/

Key to part numbers

Part-No.	Page	Part-No.	Page	Part-No.	Page	Part-No.	Page	Part-No.	Page
	08/09 /01		07/01 /03	9 087 144 093	06/01 /01	9 124 311 307	01/12 /03	9 210 281 040	01/12 /02
	08/10 /01	9 060 101 102	03/08 /03	9 087 144 125	03/02 /01		01/13 /01		05/03 /06
9 045 371 239	07/04 /01	9 060 101 137	03/08 /03		05/03 /03	9 133 339 031	07/01 /03		07/01 /03
9 045 371 281	01/03 /02	9 060 145 066	01/06 /01		06/01 /04	9 133 339 137	05/03 /04	9 210 281 060	06/01 /06
9 045 371 295	08/08A /01		05/03 /03	9 087 144 132	05/03 /03	9 133 339 174	09/01 /02		06/02 /01
	08/09A /01	9 062 311 129	05/03 /04	9 087 216 096	03/10 /02	9 148 010 156	02/05 /02		06/09 /02
	08/10A /01	9 062 311 178	03/01 /01	9 090 313 243	01/12 /01	9 148 010 176	08/02 /03	9 210 281 070	01/05 /01
9 048 316 234	01/05 /01	9 062 311 241	03/01 /02	9 090 356 183	08/07 /03	9 148 010 196	07/02 /01		01/09 /03
	01/08 /02	9 062 316 132	06/10 /01	9 093 003 066	03/09 /02	9 148 600 176	01/07 /02		01/10 /04
	01/09 /02	9 062 316 180	03/08 /06	9 110 604 493	06/11 /01	9 170 281 023	04/01 /03		05/01 /01
	08/08 /01		05/03 /06	9 111 604 497	06/09 /03	9 170 281 060	01/05 /02		05/01 /01
	08/08A /02		08/07 /03		06/11 /03	9 170 281 080	01/05 /02		05/02 /01
	08/09 /01		08/07 /03	9 113 604 324	03/09 /02		07/01 /02		06/01 /05
	08/09A /02	9 064 609 129	09/01 /02		03/10 /01	9 170 281 130	07/02 /02		06/09 /01
	08/10 /01	9 087 101 061	05/03 /06	9 113 604 495	01/11 /01		07/03 /01	9 210 281 071	05/01 /01
	08/10A /02	9 087 101 063	03/09 /02	9 116 604 380	03/08 /01		07/03 /01		05/02 /01
9 048 316 241	01/05 /01	9 087 101 068	06/09 /01	9 123 316 135	03/08 /05	9 170 281 140	07/02 /02	9 210 281 090	01/04 /03
9 048 318 129	03/02 /03	9 087 101 128	03/02 /01	9 124 311 131	05/03 /04		07/03 /02		01/09 /02
9 048 341 095	06/09 /02		03/10 /02	9 124 311 180	01/08 /01	9 170 281 160	07/02 /02		01/09 /03
9 048 348 178	02/02 /02		05/03 /03		01/09 /01	9 177 342 249	04/03 /02		01/10 /03
9 048 348 183	02/06 /01		05/03 /03	9 124 311 183	08/08 /02	9 186 353 235	03/08 /05		01/12 /02
9 048 348 236	02/04 /02		05/04 /01		08/08A /02	9 208 056 090	06/16 /01		01/12 /03
9 048 348 253	02/01 /01		09/01 /01	9 124 311 188	08/05 /03	9 208 056 110	01/12 /03		01/13 /02
9 048 350 180	08/03 /03	9 087 101 132	03/08 /03	9 124 311 246	07/03 /01		01/13 /03		01/13 /03
9 051 201 095	03/09 /02	9 087 101 140	05/04 /01	9 124 311 248	01/03 /03	9 208 281 140	01/11 /01		03/02 /01
9 051 201 098	03/08 /03	9 087 101 178	01/11 /01	9 124 311 252	05/03 /02		06/08 /01		03/02 /03
9 051 216 039	05/03 /06	9 087 128 244	04/03 /02	9 124 311 271	01/03 /03		08/01 /03		03/08 /03

Refer to respective page of Spare Parts List for every part wanted

* = innovation

https://truckmanualshub.com/

Key to part numbers

Part-No.	Page	Part-No.	Page	Part-No.	Page	Part-No.	Page	Part-No.	Page
	03/08 /05		03/04 /02		04/01 /02	9 214 317 090	03/08 /05		08/02 /04
	05/01 /02		03/05 /01		04/01 /03		05/03 /01		08/03 /06
	05/02 /01		03/07 /01		05/03 /02		06/10 /01	9 291 003 022	01/07 /01
	05/03 /01		03/06 /01		05/03 /02	9 214 317 110	01/11 /01		01/11 /01
	05/03 /04		03/06 /01		06/08 /01		05/04 /02		01/12 /01
	05/03 /04		03/06 /01		07/03 /02		06/09 /01		01/13 /01
	05/03 /04		03/08 /03		08/06 /02		06/08 /01		03/02 /02
	06/01 /02		04/01 /02		08/07 /04		08/08 /02		06/08 /01
	06/01 /04		04/01 /03	9 210 281 140	01/03 /02		08/08A /02		08/08A /02
	06/01 /04		05/03 /02		01/11 /01	9 214 317 156	04/02 /01		08/09A /02
	06/01 /04		05/04 /01		01/12 /03	9 214 335 110	01/07 /01		08/10A /02
	06/02 /01		05/04 /02		01/13 /01	9 214 342 176	04/02 /01	9 291 003 031	01/10 /03
	06/11 /01		06/01 /02		04/02 /02	9 222 057 110	01/11 /01	9 292 003 008	01/12 /02
	06/11 /01		06/01 /05		06/08 /01	9 243 281 110	01/02 /01		05/03 /06
	06/11 /03		06/09 /03		08/01 /03	9 243 281 140	02/05 /03	9 292 003 010	01/12 /01
	06/10 /01		06/11 /02		08/01 /04		07/03 /02		01/13 /01
	07/01 /02		08/01 /06		09/02 /01	9 265 316 110	06/01 /01		05/03 /04
	09/01 /01		08/05 /02	9 210 311 166	08/02 /02	9 273 201 196	07/03 /02		06/01 /05
9 210 281 110	01/08 /01		08/08 /02		08/03 /02	9 289 003 029	05/03 /04		06/02 /01
	01/09 /01		08/08A /02	9 210 341 176	07/04 /01	9 289 003 109	02/06 /01		06/09 /01
	01/10 /02		09/01 /01	9 210 346 090	05/04 /02	9 289 003 110	02/06 /01		06/11 /02
	01/10 /03		09/01 /02	9 210 346 110	08/01 /05	9 289 003 346	06/02 /01	9 292 003 012	01/04 /01
	01/11 /01	9 210 281 111	05/04 /02	9 210 826 110	01/14 /01	9 291 003 020	01/05 /01		01/09 /03
	01/12 /04	9 210 281 130	01/03 /03	9 211 281 166	08/02 /02		03/02 /03		01/10 /04
	01/13 /03		01/03 /03		08/03 /02		05/03 /04		05/01 /01
	03/01 /02		03/01 /02	9 211 281 176	04/01 /02		06/01 /03		05/03 /06
	03/01 /03		03/08 /05	9 212 341 176	04/02 /01		06/01 /05		06/01 /01

Refer to respective page of Spare Parts List for every part wanted

* = innovation

https://truckmanualshub.com/

Key to part numbers

Part-No.	Page	Part-No.	Page	Part-No.	Page	Part-No.	Page	Part-No.	Page
	06/01 /04		01/13 /03		05/03 /06		08/01 /05		08/07 /02
9 292 003 014	01/09 /02		03/01 /03		08/06 /03		08/06 /02		09/01 /02
	01/09 /03		03/05 /01		08/07 /04	9 308 003 020	01/04 /02	9 309 412 018	01/10 /02
	01/12 /02		03/06 /01		08/08A /02		03/02 /02		01/11 /02
	01/13 /02		03/08 /04		08/09A /02		04/01 /02		03/05 /01
	03/02 /03		05/04 /01		08/10A /02		04/01 /03		03/06 /01
	03/02 /03		06/01 /03	9 294 003 022	01/03 /02		06/08 /02		05/03 /02
	03/08 /05		06/09 /03		05/04 /02	9 309 412 010	03/08 /05		05/03 /02
	03/09 /02		06/08 /01	9 294 428 018	03/04 /01		06/11 /03		05/04 /01
	05/03 /02		06/11 /02	9 295 003 031	01/07 /01	9 309 412 012	03/09 /01		06/01 /02
	05/03 /04		08/02 /01	9 307 003 014	03/09 /02	9 309 412 014	01/04 /01		06/01 /03
	05/04 /02		08/02 /02		03/10 /02		01/07 /02		06/01 /04
	06/01 /04		08/03 /01		06/01 /04		01/07 /02		06/01 /05
	06/02 /01		08/03 /02		06/01 /04		01/10 /03		06/09 /04
	06/08 /01		08/03 /06		06/01 /05		01/10 /03		06/11 /01
	06/11 /01		08/06 /01	9 308 003 018	01/04 /03		01/12 /02		06/11 /01
	06/11 /02		08/07 /04		01/05 /01		01/12 /03		06/08 /02
	06/11 /03		08/08 /02		03/02 /02		01/13 /03		08/01 /05
	06/10 /01		08/08A /02		03/04 /02		01/13 /03		08/05 /03
	08/05 /03		09/01 /01		03/05 /01		01/13 /03		08/06 /04
	08/06 /01	9 294 003 018	01/03 /01		03/07 /01		03/02 /01		08/07 /05
	08/07 /05		01/07 /01		03/06 /01		05/03 /04		08/08 /02
	09/01 /01		01/08 /01		03/06 /01		06/02 /01		08/08 /02
9 292 003 018	01/04 /03		01/09 /01		03/08 /05		06/09 /01		08/08A /02
	01/06 /01		03/08 /02		04/01 /02		06/11 /01		08/08A /02
	01/11 /01		08/05 /03		04/01 /03		08/06 /04	9 309 412 020	01/04 /02
	01/12 /03	9 294 003 020	05/03 /04		06/11 /03		08/06 /04		01/10 /01

Refer to respective page of Spare Parts List for every part wanted

* = innovation

https://truckmanualshub.com/

Key to part numbers

Part-No.	Page	Part-No.	Page	Part-No.	Page	Part-No.	Page	Part-No.	Page
	01/12 /01		03/06 /01	9 380 627 317	08/08 /01		08/10A /01	9 495 080 157	08/01 /03
	03/01 /02		06/01 /02		08/08A /02	9 456 622 552	02/04 /01	9 495 080 159	08/01 /03
	03/02 /01	9 323 620 020	06/08 /01	9 381 660 312	02/04 /01	9 456 622 829	02/01 /01		08/01 /03
	03/02 /03	9 330 620 010	06/09 /02	9 381 660 478	08/01 /04	9 460 620 050	03/04 /01	9 495 080 161	08/01 /03
	03/08 /04	9 330 620 018	03/08 /03	9 384 620 317	04/02 /02	9 461 620 280	07/04 /01	9 495 080 169	08/01 /03
	03/08 /05		06/01 /02	9 384 620 405	02/01 /02	9 464 620 060	05/03 /05	9 495 080 171	08/01 /03
	04/03 /02		06/01 /05	9 384 620 450	02/06 /01	9 464 621 240	05/03 /05	9 495 104 930	08/02 /02
	05/03 /02		06/09 /01	9 384 621 744	04/02 /02	9 466 650 040	09/01 /01		08/03 /02
	06/02 /01		06/08 /01	9 385 450 370	02/01 /01	9 487 648 161	01/10 /01	9 495 114 045	08/02 /02
	08/03 /06	9 330 629 014	06/01 /04	9 385 600 329	02/01 /01	9 495 080 097	08/01 /02		08/03 /02
	08/06 /02	9 332 622 014	01/13 /02	9 387 620 211	05/04 /02	9 495 080 099	08/01 /02	9 495 114 047	08/03 /03
	08/07 /04	9 380 620 142	01/03 /02	9 387 620 219	05/04 /01	9 495 080 101	08/01 /02	9 495 114 049	08/02 /02
9 309 412 022	03/01 /02	9 380 620 204	01/03 /02	9 395 003 081	05/03 /04	9 495 080 103	08/01 /02		08/03 /03
	08/01 /03	9 380 620 224	08/08 /01	9 424 700 248	03/04 /02	9 495 080 107	08/01 /02	9 495 114 051	08/02 /02
	08/01 /04		08/08A /01	9 455 622 113	02/06 /01	9 495 080 109	08/01 /03		08/03 /03
	09/02 /01		08/09 /01	9 455 622 172	08/01 /02	9 495 080 117	08/01 /03	9 495 114 053	08/02 /02
9 311 003 022	01/02 /01		08/09A /01		08/02 /01	9 495 080 119	08/01 /03		08/03 /03
	01/11 /01		08/10 /01		08/03 /02	9 495 080 123	08/01 /03	9 495 114 055	08/02 /02
	06/08 /01		08/10A /01	9 455 622 215	02/02 /01	9 495 080 125	08/01 /03	9 495 114 057	08/03 /03
9 311 600 046	01/11 /01	9 380 620 257	04/02 /01	9 455 622 245	02/01 /02	9 495 080 127	08/01 /03	9 495 114 059	08/03 /03
	06/08 /01	9 380 620 269	08/01 /05	9 455 622 279	02/01 /01	9 495 080 129	08/01 /03	9 495 114 061	08/03 /03
9 312 600 022	03/01 /01	9 380 620 324	07/04 /01	9 456 622 167	02/05 /02	9 495 080 133	08/01 /03	9 495 116 045	08/02 /02
9 321 620 012	03/09 /01	9 380 620 326	08/01 /05	9 456 622 214	05/03 /05	9 495 080 135	08/01 /03		08/03 /02
9 321 620 014	09/01 /01		08/02 /04	9 456 622 377	02/01 /02	9 495 080 139	08/01 /03	9 495 116 047	08/03 /03
9 321 620 018	03/08 /04		08/03 /06	9 456 622 518	02/01 /01	9 495 080 141	08/01 /03	9 495 116 049	08/02 /02
9 323 620 012	05/03 /04	9 380 620 375	03/01 /01		08/08A /01	9 495 080 149	08/01 /03		08/03 /03
9 323 620 018	03/05 /01	9 380 620 379	03/01 /01		08/09A /01	9 495 080 151	08/01 /03	9 495 116 051	08/02 /02

Refer to respective page of Spare Parts List for every part wanted

* = innovation

https://truckmanualshub.com/

Key to part numbers

Part-No.	Page	Part-No.	Page	Part-No.	Page	Part-No.	Page	Part-No.	Page
	08/03 /03		08/10 /01		08/03 /04	VW021109641C	00/109-05/01	VW026109129E	00/109-45/01
9 495 116 053	08/02 /02	9 607 024 090	08/08A /01	9 721 002 022	07/02 /02	VW021109651	00/109-05/01	VW026109150A	00/109-45/01
	08/03 /03		08/09A /01	9 721 002 062	04/01 /02		00/109-15/01	VW026109173A	00/109-45/01
9 495 116 055	08/02 /02		08/10A /01		07/01 /02	VW021903221E	00/903-00/01	VW026109175B	00/109-45/01
9 495 116 057	08/03 /03	9 607 024 092	08/08A /01		08/05 /01		00/903-10/01	VW026109243L	00/109-45/01
9 495 116 059	08/03 /03		08/09A /01		08/06 /01	VW022103139	00/103-05/01	VW026109629	00/103-35/01
9 495 116 061	08/03 /03		08/10A /01		08/07 /01		00/103-05/02	VW026121031D	00/121-10/01
9 509 000 615	02/04 /01	9 636 801 037	08/04 /04	9 721 010 018	07/02 /02	VW026103113B	00/103-35/01	VW026121041P	00/121-05/01
9 509 000 875	02/02 /01	9 636 801 063	04/01 /03		07/03 /01	VW026103139	00/103-05/01		00/121-10/01
9 511 000 119	02/01 /01		08/02 /04	9 758 003 602	03/09 /02	VW026103161B	00/103-05/01	VW026121053G	00/121-51/01
9 512 000 175	04/02 /02		08/03 /05	9 758 400 230	07/02 /03		00/103-05/01	VW026121144F	00/121-50/01
9 512 000 204	07/04 /01	9 636 801 143	07/02 /01	9 796 470 070	05/04 /02	VW026103181B	00/103-05/01		00/121-51/01
9 575 931 454	01/10 /01	9 636 801 195	02/01 /02	9 798 002 051	05/04 /02		00/103-05/01	VW026127025A	00/127-05/01
9 607 021 060	04/02 /02	9 636 801 236	01/14 /01	9 798 311 011	05/01 /01	VW026103383P	00/103-35/01	VW026129893	00/129-65/01
	07/03 /02	9 715 002 685	01/14 /01		05/02 /01	VW026103400A	00/103-35/02	VW026129949	00/129-65/01
	08/08A /01		08/02 /03	9 803 050 083	05/01 /01	VW026103469E	00/103-35/02	VW026133827A	00/127-05/01
	08/09A /01	9 721 000 008	07/01 /02		05/02 /01	VW026103547	00/103-35/02	VW026198012AB	00/103-35/02
	08/10A /01	9 721 001 308	07/04 /01	9 803 311 084	05/01 /01	VW026103637A	00/115-10/01	VW026198012AC	00/103-35/02
9 607 021 080	07/04 /01	9 721 002 001	04/01 /02		05/02 /01		00/115-25/01	VW026198025A	00/103-35/02
	08/01 /05	9 721 002 008	08/08A /02	9 815 000 086	04/03 /01	VW026105101F	00/105-10/01	VW026198151B	00/107-00/01
	08/02 /04		08/09A /02	9 815 000 087	04/03 /01	VW026105255	00/105-10/01	VW026198153A	00/107-00/01
	08/03 /06		08/10A /02	9 815 000 088	04/03 /01	VW026105275	00/105-05/01	VW026198155A	00/107-00/01
	08/08 /01	9 721 002 010	04/02 /02	9 815 002 945	04/03 /02		00/105-10/01	VW026198421	00/105-05/01
	08/09 /01	9 721 002 015	04/01 /02	9 815 005 945	04/03 /02	VW026107065N	00/107-00/01		00/105-10/01
	08/10 /01		07/03 /01	9 815 005 948	04/03 /01	VW026107081N	00/107-00/01	VW026198491	00/105-05/01
9 607 021 082	08/08 /01		08/03 /04	9 815 010 085	04/03 /01	VW026109101M	00/109-15/01		00/105-10/01
	08/09 /01	9 721 002 018	08/02 /03	9 815 011 085	04/03 /01	VW026109107B	00/109-45/01	VW026198491A	00/105-10/01

Refer to respective page of Spare Parts List for every part wanted

* = innovation

https://truckmanualshub.com/

Key to part numbers

Part-No.	Page	Part-No.	Page	Part-No.	Page	Part-No.	Page	Part-No.	Page
VW026903017AX	00/903-10/01	VW028103469L	00/103-35/01	VW028109178A	00/109-30/01		00/130-30/01	VW028903803D	00/903-00/03
VW026903245A	00/903-35/01	VW028103483H	00/103-35/01	VW028109243F	00/109-30/01	VW028130301Q	00/130-30/02	VW028905256	00/905-30/01
VW026903247B	00/903-35/01	VW028103491J	00/103-70/01	VW028109601B	00/109-05/01	VW028130302Q	00/130-30/02	VW028919081H	00/972-05/01
VW026903537A	00/903-00/02	VW028103493T	00/103-70/01	VW028109611E	00/109-05/01	VW028130303J	00/130-30/02	VW02B911213	00/911-15/01
	00/903-10/02	VW028103500	00/103-70/01	VW028109623B	00/109-05/01	VW028130304H	00/130-30/02	VW02B911365	00/911-15/01
VW026905225C	00/905-30/01	VW028103531B	00/103-35/01	VW028109633A	00/109-05/01	VW028130431	00/130-30/02	VW032121142	00/121-15/01
VW026905237AX	00/905-30/01	VW028103532A	00/103-35/01	VW028115017E	00/115-25/01		00/130-30/02		00/121-51/01
VW026905271	00/905-30/01	VW028103533	00/103-35/01	VW028115021B	00/115-25/01	VW028130795	00/130-05/01	VW033105701	00/105-05/01
VW027109675	00/109-05/01	VW028103534A	00/103-35/01	VW028115105G	00/115-25/01	VW028145278E	00/903-35/01	VW033105707	00/105-05/01
	00/109-15/01	VW028103536	00/103-35/01	VW028115436	00/115-05/01	VW028145291B	00/903-35/01	VW033105713	00/105-05/01
VW027115033	00/115-10/01	VW028103634	00/115-05/01	VW028115441C	00/115-05/01	VW028198011D	00/103-05/02	VW033105719	00/105-05/01
	00/115-25/01	VW028103663B	00/115-05/01		00/115-30/01	VW028198012E	00/103-35/02	VW034105701	00/105-10/02
VW027115105E	00/115-10/01	VW028105101L	00/105-05/01	VW028115611C	00/115-05/01	VW028198119A	00/109-30/01	VW034105701 007	00/105-10/02
VW027115611C	00/115-30/01	VW028105253A	00/121-05/01	VW028121031K	00/121-05/01	VW028198155A	00/107-00/01	VW034105707	00/105-10/02
VW027121631A	00/121-50/01	VW028105263D	00/105-05/01	VW028121053N	00/121-15/01	VW028198401E	00/105-05/01	VW034105707 007	00/105-10/02
VW027198401B	00/105-10/01	VW028105425C	00/105-05/01	VW028127311A	00/127-05/01	VW028260821	00/903-35/01	VW034105713	00/105-10/02
VW027905207	00/905-30/01	VW028105431D	00/105-05/01	VW028129101D	00/103-70/01	VW028260821A	00/903-35/01	VW034105713 007	00/105-10/02
VW028100035K	00/100-10/01	VW028107065CF	00/107-00/01	VW028129101E	00/103-70/01	VW028260821C	00/903-35/01	VW034105719	00/105-10/02
VW028100103EX	00/100-10/01	VW028107065CF001	00/107-00/01	VW028129711C	00/129-05/01	VW028903119F	00/903-00/01	VW034105719 007	00/105-10/02
VW028103039A	00/103-05/01	VW028107065CF003	00/107-00/01	VW028129717D	00/129-05/01	VW028903137BB	00/903-35/01	VW034903555B	00/903-35/01
VW028103101D	00/103-05/01	VW028107081	00/107-00/01	VW028130082B	00/130-05/01	VW028903139T	00/903-35/01		00/903-40/01
VW028103171B	00/103-05/01	VW028109101G	00/109-05/01	VW028130111C	00/130-05/01	VW028903193E	00/903-00/01		00/903-45/01
VW028103265GX	00/103-35/01	VW028109119P	00/109-30/01	VW028130135B	00/130-05/01	VW028903308G	00/903-35/01	VW034905265	00/905-30/01
VW028103351M	00/103-35/01	VW028109123E	00/109-30/01	VW028130147A	00/130-05/01	VW028903310	00/903-35/01	VW034998065	00/905-30/01
VW028103383BH	00/103-35/01	VW028109127C	00/109-30/01	VW028130147D	00/130-05/02	VW028903315R	00/903-35/01	VW035103379	00/103-35/01
VW028103383BJ	00/103-35/01	VW028109132	00/109-30/01	VW028130149	00/130-05/01	VW028903320B	00/903-10/01	VW035121171C	00/129-65/01
VW028103383BK	00/103-35/01	VW028109143C	00/109-30/01	VW028130229A	00/129-05/01		00/903-00/02	VW035127301C	00/127-05/01

Refer to respective page of Spare Parts List for every part wanted

* = innovation

https://truckmanualshub.com/

Key to part numbers

Part-No.	Page	Part-No.	Page	Part-No.	Page	Part-No.	Page	Part-No.	Page
VW035905209A	00/905-30/01	VW037903181	00/903-10/02	VW048109611B	00/109-15/01	VW050103663	00/115-30/01	VW055121121F	00/121-05/01
VW035905281A	00/905-30/01		00/903-00/03	VW048129717D	00/129-65/01	VW050109309J	00/109-05/01		00/121-10/01
VW035905331B	00/905-30/01	VW037903555	00/903-00/02	VW049103384B	00/103-35/01		00/109-15/01	VW055905225B	00/905-30/01
VW035911213B	00/911-15/01		00/903-10/02	VW049103634	00/115-30/01	VW050903137	00/121-10/01	VW056103117	00/103-05/01
VW035911299B	00/911-15/01	VW038103493D	00/103-70/01	VW049105263C	00/105-10/01		00/903-35/01		00/103-05/01
	00/911-15/01	VW038103493P	00/103-70/01	VW049109111C	00/109-15/01	VW051100031E	00/100-10/01	VW056103377	00/103-35/01
VW036103113A	00/103-05/01	VW038107065AA	00/107-00/01		00/115-10/01	VW051103101	00/103-05/01	VW056103397	00/103-35/01
	00/103-05/01	VW038107065AA001	00/107-00/01	VW049109291A	00/109-45/01	VW051103152	00/103-05/01		00/103-35/01
	00/103-05/01	VW038107065AA003	00/107-00/01	VW049115017B	00/115-10/01		00/103-05/01	VW056103419A	00/103-35/01
VW036121324B	00/121-15/01	VW038107065AB	00/107-00/01	VW049121099	00/121-05/01	VW051103265BX	00/103-35/01	VW056103493	00/103-55/01
	00/121-50/01	VW038107065AB001	00/107-00/01		00/121-10/01	VW051103351B	00/103-35/01	VW056103541	00/103-05/01
	00/121-51/01	VW038107065AB003	00/107-00/01	VW049127311A	00/127-05/01	VW051103483A	00/103-35/01		00/103-05/02
VW036903121	00/903-35/01	VW038107065H	00/107-00/01	VW049903103B	00/903-35/01	VW051103601	00/103-05/01		00/115-10/01
VW036903359H	00/903-10/01	VW038107065H 001	00/107-00/01	VW049903119L	00/903-00/01		00/103-05/02		00/115-25/01
VW036903537C	00/903-00/02	VW038107065H 003	00/107-00/01		00/903-35/01	VW051103609E	00/103-05/02	VW056103551B	00/103-05/02
VW037103419B	00/103-35/01	VW038107065J	00/107-00/01	VW049903149	00/903-35/01	VW051129711D	00/129-65/01		00/103-05/02
VW037115220B	00/103-05/02	VW038107065J 001	00/107-00/01	VW049903223	00/903-10/01	VW051198119	00/109-45/01	VW056103591	00/103-35/02
VW037121005C	00/121-05/01	VW038107065J 003	00/107-00/01		00/903-00/02		00/109-95/01	VW056103651	00/109-05/01
	00/121-10/01	VW038121119B	00/121-05/01	VW049903515C	00/903-10/01	VW051971843B	00/972-05/01	VW056103652	00/109-05/01
VW037121010BX	00/121-10/01		00/121-10/01		00/903-00/02	VW053105431B	00/105-10/01	VW056105313C	00/105-10/01
VW037121010C	00/121-05/01	VW038129101A	00/103-70/01	VW049903537B	00/903-00/02	VW053115167	00/115-10/01	VW056105567B	00/105-10/01
	00/121-10/01	VW038198151	00/107-00/01		00/903-10/02		00/115-25/01	VW056105573B	00/105-10/01
VW037121010CX	00/121-05/01	VW039905241	00/905-30/01	VW049903555A	00/903-00/02	VW053115417A	00/115-05/01	VW056105579B	00/105-10/01
VW037121132B	00/121-51/01	VW044121144C	00/121-15/01		00/903-10/02		00/115-30/01	VW056109119A	00/109-45/01
VW037121687	00/121-15/01	VW048105425	00/105-10/01	VW049905281A	00/905-30/01	VW054903221A	00/903-00/01	VW056109143	00/109-15/01
	00/121-50/01	VW048105427	00/105-10/01	VW050103383B	00/103-35/01		00/903-10/01		00/115-10/01
	00/121-51/01	VW048109601E	00/109-15/01	VW050103384	00/103-35/01	VW055115221B	00/115-25/01		00/115-25/01

Refer to respective page of Spare Parts List for every part wanted

* = innovation

https://truckmanualshub.com/

Key to part numbers

Part-No.	Page	Part-No.	Page	Part-No.	Page	Part-No.	Page	Part-No.	Page
VW056109629A	00/109-05/01	VW068121113A	00/121-05/01	VW068130263	00/130-30/01	VW068903017NX	00/903-00/01	VW068919369	00/121-50/01
VW056903291	00/903-10/01		00/121-10/01	VW068130264	00/130-30/01		00/903-00/01		00/121-51/01
	00/903-00/02	VW068121132	00/121-15/01	VW068130265	00/130-30/01		00/903-10/01		00/972-00/01
VW056905261	00/103-05/01	VW068121144	00/121-15/01	VW068130266	00/130-30/01	VW068903017TX	00/903-00/01		00/972-05/01
	00/905-30/01	VW068121185B	00/121-10/01	VW068130267	00/130-30/01	VW068903137Q	00/903-40/01	VW068972095B	00/972-00/01
VW059115721	00/115-30/01		00/121-05/02	VW068130268	00/130-30/01	VW068903141R	00/903-40/01	VW069109111	00/109-05/01
VW059903543	00/903-00/02	VW068129635	00/129-05/01	VW068130269	00/130-30/01		00/903-45/01	VW069109150	00/109-30/01
	00/903-10/02	VW068129638A	00/129-05/01	VW068130270	00/130-30/01	VW068903147H	00/903-40/01	VW069903213E	00/903-00/01
VW059911257B	00/911-15/01	VW068130139	00/130-05/01	VW068130331Q	00/130-05/02		00/903-45/01		00/903-10/01
VW059998225	00/905-30/01	VW068130173B	00/130-05/01	VW068130331S	00/130-05/02	VW068903171	00/903-00/01	VW069903359D	00/903-10/01
VW063103113	00/127-05/01	VW068130174	00/130-05/01	VW068130718	00/130-20/01		00/903-10/01		00/903-00/02
VW068103085E	00/103-05/01	VW068130197	00/130-05/01	VW068130718F	00/130-20/01	VW068903213F	00/903-00/01	VW06A100041A	00/100-10/01
	00/103-05/01	VW068130199	00/130-05/01	VW068130718H	00/130-20/01	VW068903251H	00/903-40/01	VW06A100041B	00/100-10/01
	00/103-35/01	VW068130202AX	00/130-30/01	VW068130718J	00/130-20/01		00/903-45/01	VW06A100105GX	00/100-10/01
	00/103-35/01	VW068130219	00/130-30/01	VW068130735H	00/130-05/02	VW068903791E	00/903-00/02	VW06A100105HX	00/100-10/01
	00/115-10/01	VW068130251	00/130-30/01	VW068130735N	00/130-20/01		00/903-10/02	VW06A103483D	00/103-35/02
	00/115-25/01	VW068130252	00/130-30/01		00/130-05/02	VW068903803DX	00/903-10/02		00/103-35/02
VW068103157D	00/103-05/01	VW068130253	00/130-30/01	VW068130787A	00/130-05/01		00/903-00/03	VW06A115561B	00/115-30/01
VW068103171F	00/103-05/01	VW068130254	00/130-30/01	VW068198051A	00/130-20/01	VW068911024F	00/911-15/01	VW06A198119	00/109-95/01
VW068103384A	00/103-35/01	VW068130255	00/130-30/01	VW068198052A	00/130-20/01	VW068911024GX	00/911-15/01	VW06B103485C	00/103-35/01
VW068103621E	00/103-05/02	VW068130256	00/130-30/01	VW068198171	00/103-05/01		00/911-15/01		00/103-35/02
VW068105255E	00/105-05/01	VW068130257	00/130-30/01	VW068198493	00/105-05/01	VW068911209J	00/911-15/01	VW06B103551G	00/103-05/02
VW068115561B	00/115-05/01	VW068130258	00/130-30/01		00/105-10/01	VW068911255S	00/911-15/01	VW06G100031BX	00/100-10/01
VW068121029A	00/121-10/01	VW068130259	00/130-30/01	VW068198495	00/105-05/01	VW068911287H	00/911-15/01	VW06G100031J	00/100-10/01
	00/121-05/02	VW068130260	00/130-30/01		00/105-10/02		00/911-15/01	VW06G100031JX	00/100-10/01
VW068121031K	00/121-05/01	VW068130261	00/130-30/01	VW068198497	00/105-05/01	VW068911303F	00/911-15/01	VW075145265B	00/903-40/01
VW068121039G	00/121-05/02	VW068130262	00/130-30/01		00/105-10/02	VW068911335H	00/911-15/01		00/903-45/01

Refer to respective page of Spare Parts List for every part wanted

* = innovation

https://truckmanualshub.com/

Key to part numbers

Part-No.	Page	Part-No.	Page	Part-No.	Page	Part-No.	Page	Part-No.	Page
VW077103175B	00/115-30/01		00/911-15/01		00/115-10/01	VWN 0110304	00/130-05/01	VWN 0119191	00/103-35/01
VW078109623C	00/109-15/01	VWAMV18800102	00/129-05/01		00/115-25/01	VWN 01111816	00/911-15/01	VWN 0120387	00/911-15/01
VW078109633A	00/109-15/01	VWAMV18810002	00/115-05/01	VWN 01024118	00/903-40/01		00/911-15/01		00/911-15/01
VW078109641C	00/109-15/01		00/115-30/01	VWN 01024123	00/109-45/01	VWN 0111337	00/109-45/01	VWN 0120442	00/903-35/01
VW101000001AD	00/905-15/01	VWD 176404A2	00/103-05/02	VWN 01024222	00/903-35/01	VWN 0111849	00/130-05/01	VWN 0122213	00/903-10/02
VW101000005AD	00/905-15/01	VWG 012A8FM1	00/121-15/01		00/903-35/01		00/130-05/01		00/903-00/03
VW101000005AE	00/905-15/01		00/121-50/01		00/905-30/01	VWN 0115227	00/903-10/02	VWN 0122224	00/903-00/03
VW101000036AC	00/905-15/01	VWG 012A8FM8	00/121-50/01	VWN 01024425	00/121-05/01		00/903-00/03	VWN 0122265	00/103-05/01
VW111127537A	00/127-05/01	VWG 052735A2	00/903-35/01		00/121-10/01	VWN 01152318	00/903-10/02		00/109-45/01
	00/129-55/01	VWN 0101371	00/109-15/01	VWN 0102478	00/130-05/01		00/903-00/03		00/115-10/01
VW111198555C	00/127-05/01		00/115-10/01	VWN 0102695	00/130-05/01	VWN 01152321	00/130-05/02		00/115-25/01
VW111821145	00/109-45/01		00/115-25/01	VWN 0103506	00/121-05/01	VWN 01152426	00/103-05/01		00/121-05/01
VW171121327	00/121-51/01	VWN 01021226	00/109-30/01	VWN 0103516	00/121-05/01		00/109-45/01		00/121-10/01
VW171711512	00/130-05/02	VWN 01021527	00/129-65/01	VWN 01036112	00/911-15/01	VWN 01152527	00/129-05/01		00/121-15/01
VW191911261C	00/972-00/01	VWN 01021533	00/109-30/01	VWN 01036113	00/121-05/01		00/129-65/01		00/121-50/01
VW251919369B	00/121-50/01		00/130-05/02	VWN 0103805	00/903-40/01	VWN 0115477	00/130-05/01		00/121-51/01
VW251919501D	00/121-51/01	VWN 01021612	00/103-05/01	VWN 0103883	00/115-10/01	VWN 0115562	00/903-00/03	VWN 0122283	00/115-10/01
	00/972-00/01		00/130-05/02		00/115-25/01	VWN 01155811	00/903-40/01		00/115-25/01
	00/972-05/01	VWN 01021723	00/103-05/01	VWN 0107042	00/903-10/02	VWN 01155813	00/103-35/01	VWN 0122314	00/109-45/01
VW357121140	00/121-15/01		00/121-15/01		00/903-00/03		00/109-30/01	VWN 0122321	00/130-05/01
	00/121-51/01	VWN 0102228	00/115-10/01	VWN 01100636	00/103-35/02		00/903-45/01	VWN 0122333	00/903-00/03
	00/121-51/01		00/115-25/01		00/109-30/01	VWN 0116961	00/903-35/01		00/903-10/03
VW357911253	00/972-00/01		00/121-05/01		00/109-45/01	VWN 0119043	00/129-65/01	VWN 0122345	00/103-05/01
VW357972742C	00/911-15/01		00/121-10/01	VWN 01100830	00/903-10/02	VWN 01190710	00/103-05/01	VWN 0122385	00/903-00/03
VW357972771	00/911-15/01	VWN 0102279	00/103-05/01		00/903-00/03		00/103-05/01		00/903-10/03
VW8A0831449	00/109-30/01	VWN 01024016	00/103-05/01	VWN 01100846	00/103-35/01	VWN 01191410	00/103-35/01	VWN 01224110	00/103-05/01
VW8D0911483A	00/911-15/01		00/103-05/01		00/103-35/01		00/103-35/01		00/103-05/01

Refer to respective page of Spare Parts List for every part wanted

* = innovation

https://truckmanualshub.com/

Key to part numbers

Part-No.	Page	Part-No.	Page	Part-No.	Page	Part-No.	Page	Part-No.	Page
	00/105-05/01		00/103-05/02		00/903-45/01		00/903-00/04	VWN 90130001	00/103-05/01
	00/115-05/01	VWN 0141233	00/911-15/01	VWN 0197002	00/903-35/01	VWN 10017304	00/130-05/02	VWN 90132606	00/103-35/01
	00/115-10/01	VWN 0141251	00/903-10/03	VWN 0201391	00/129-55/01	VWN 10067003	00/903-40/01	VWN 90175205	00/121-15/01
	00/115-25/01		00/903-00/04	VWN 02035327	00/129-55/01	VWN 10120701	00/127-05/01	VWN 90175601	00/129-05/01
	00/115-30/01	VWN 0144083	00/103-35/01	VWN 02035333	00/130-30/01		00/129-55/01	VWN 90179102	00/129-55/01
	00/121-05/01		00/109-30/01	VWN 0209022	00/121-50/01	VWN 10120803	00/903-35/01	VWN 90188902	00/103-35/01
	00/121-10/01	VWN 01470514	00/109-45/01	VWN 0221464	00/129-05/01	VWN 10133301	00/107-00/01	VWN 90215604	00/903-45/01
	00/121-10/01	VWN 0147068	00/105-05/01	VWN 0221544	00/130-05/01	VWN 10140104	00/972-00/01	VWN 90221803	00/103-70/01
	00/127-05/01	VWN 0147154	00/129-05/01		00/972-00/01	VWN 10140105	00/972-00/01		00/121-05/01
	00/129-55/01	VWN 0147404	00/903-35/01	VWN 0230038	00/903-35/01	VWN 10213001	00/972-00/01	VWN 90229102	00/903-35/01
	00/130-05/01	VWN 0147513	00/129-55/01	VWN 0245044	00/129-05/01	VWN 10213002	00/972-00/01	VWN 90241501	00/103-05/01
	00/903-35/01		00/129-65/01	VWN 0245077	00/121-50/01	VWN 10218708	00/903-35/01	VWN 90280901	00/121-50/01
	00/905-30/01	VWN 0147821	00/130-05/01		00/121-50/01		00/903-00/03		00/121-51/01
VWN 0122731	00/107-00/01	VWN 0152761	00/109-30/01		00/121-51/01	VWN 10226004	00/130-05/01	VWN 90288901	00/103-05/02
VWN 0122771	00/107-00/01	VWN 0154013	00/903-40/01	VWN 0282222	00/115-10/01	VWN 10258101	00/103-70/01		00/103-05/02
VWN 0127061	00/130-05/01	VWN 0155151	00/130-05/02		00/115-25/01		00/121-15/01	VWN 90296401	00/109-45/01
VWN 0127082	00/109-05/01	VWN 0160241	00/121-50/01	VWN 0283403	00/129-65/01	VWN 10263801	00/103-05/01		00/109-45/01
	00/109-15/01	VWN 0160243	00/103-35/01	VWN 0297022	00/103-05/01	VWN 10419101	00/103-35/02	VWN 90308607	00/105-10/01
	00/115-10/01		00/115-05/01	VWN 0402622	00/121-10/01	VWN 10449101	00/103-70/01		00/121-05/01
	00/115-25/01		00/115-30/01	VWN 0432072	00/103-05/01	VWN 10644901	00/127-05/01		00/121-10/01
	00/903-10/03		00/129-65/01		00/103-05/01	VWN 90045501	00/130-30/01	VWN 90316802	00/121-15/01
	00/903-00/04	VWN 0162011	00/103-05/01	VWN 0444115	00/103-35/01	VWN 90045502	00/129-05/01		00/121-51/01
VWN 0138115	00/103-05/01		00/103-05/01	VWN 0447141	00/129-65/01	VWN 90053401	00/109-30/01		00/972-05/01
	00/115-05/01	VWN 0164021	00/121-15/01	VWN 0447591	00/903-35/01		00/109-45/01	VWN 90320802	00/105-10/01
	00/115-30/01	VWN 0164041	00/121-15/01	VWN 0903151	00/109-30/01	VWN 90074404	00/109-30/01	VWN 90339605	00/115-05/01
	00/121-50/01	VWN 0195024	00/903-35/01		00/115-05/01	VWN 90080301	00/103-35/01		00/115-30/01
VWN 0138492	00/103-05/02	VWN 01953310	00/903-35/01	VWN 10017303	00/903-10/03	VWN 90107604	00/129-55/01	VWN 90353501	00/115-10/01

Refer to respective page of Spare Parts List for every part wanted

* = innovation

https://truckmanualshub.com/

Key to part numbers

Part-No.	Page	Part-No.	Page	Part-No.	Page	Part-No.	Page	Part-No.	Page
	00/115-25/01								
VWN 90355903	00/127-05/01								
VWN 90403002	00/903-10/03								
	00/903-00/04								
VWN 90425401	00/115-30/01								
VWN 90466301	00/103-70/01								
VWN 90483204	00/103-05/03								
VWN 90493801	00/903-35/01								
VWN 90502103	00/109-05/01								
VWN 90512601	00/911-15/01								
VWN 90561801	00/103-55/01								
VWN 90577101	00/105-05/01								
VWN 90592703	00/103-05/02								
	00/103-05/02								
VWN 90687001	00/103-70/01								
VWN 90766002	00/911-15/01								
VWN 91148001	00/121-15/01								
	00/121-51/01								

Refer to respective page of Spare Parts List for every part wanted

* = innovation

https://truckmanualshub.com/

Register 00 : ENGINE

00/100-10	00 - 01	Base Engine Without DistribuTor, Intake Manifold, Exhaust Manifold And Alternator ADG
00/100-10	00 - 01	Base engine ADF,BEF,CBSA
00/103-05	00 - 02	Cylinder Block With Pistons Oil Sump ADG
00/103-05	00 - 03	Cylinder Block With Pistons Oil Sump ADF
00/103-35	00 - 02	Cylinder Head Cylinder Head Cover ADG
00/103-35	00 - 02	Cylinder Head Cylinder Head Cover ADF
00/103-55	00 - 01	Ventilation For Cylinder Head Cover ADF
00/103-70	00 - 01	Ventilation For Cylinder Block ADG,BXT,BEQ,BEU,BJC
00/105-05	00 - 01	Crankshaft Conrod Bearings ADG
00/105-10	00 - 02	Crankshaft Conrod Bearings ADF
00/107-00	00 - 02	Piston Piston Ring ADG,BXT,BEQ,BEU,BJC
00/107-00	00 - 01	Piston Piston Ring ADF
00/109-05	00 - 01	Camshaft, Valves ADG
00/109-15	00 - 01	Camshaft, Valves ADF
00/109-30	00 - 01	Toothed Belt Toothed Belt Cover ADG
00/109-45	00 - 01	Toothed Belt Toothed Belt Cover ADF
00/109-95	00 - 01	Repair Kit For Toothed Belt With Tensioning Roller ADF,BEF,CBSA
00/115-05	00 - 01	Oil Filter Oil filter bracket ADG
00/115-10	00 - 01	Oil Pump ADF
00/115-30	00 - 01	Oil Filter Oil filter bracket ADF
00/115-25	00 - 01	Oil Pump ADG
00/121-05	00 - 02	Water Pump ADG
00/121-10	00 - 01	Water Pump ADF
00/121-15	00 - 01	Flange Water Hoses ADG
00/121-50	00 - 01	Water Hoses And Pipes Radiator Flange ADF
00/121-51	00 - 01	Water Hoses And Pipes Radiator Flange ADF
00/127-05	00 - 01	Fuel Pump ADF
00/129-05	00 - 01	Intake Connection ADG
00/129-55	00 - 01	Intake System ADF
00/129-65	00 - 01	Intake Connection ADF
00/130-05	00 - 02	Injection Pump ADG
00/130-20	00 - 01	Set Of Gaskets For Injection Pump ADG
00/130-30	00 - 02	Injector Pressure Pipes ADG
00/903-00	00 - 04	Alternator And Single Parts ADG
00/903-10	00 - 03	Alternator And Single Parts ADF
00/903-35	00 - 01	Connecting And Mounting Parts For Alternator Ribbed V-Belt ADG
00/903-35	00 - 01	Connecting And Mounting Parts For Alternator ADF
00/903-40	00 - 01	Connecting And Mounting Parts For Alternator ADG
00/903-45	00 - 01	Connecting And Mounting Parts For Alternator ADF
00/905-15	00 - 01	Ignition Coil Ignition Lead ADF
00/905-30	00 - 01	Ignition Distributor ADF
00/911-15	00 - 01	Starter ADG,BEQ,BEU
00/911-15	00 - 01	Starter ADF,BEF
00/972-00	00 - 01	Glow Plug Wiring Harness For Alternator ADG,BXT,BEQ,BEU,BJC
00/972-05	00 - 01	Wiring Harness For Alternator ADF

https://truckmanualshub.com/

NOTE

WHEN ORDERING REPLACEMENT PARTS FOR THE MOTOR; PLEASE GIVE THE FOLLOWING INFORMATION:

- VEHICLE TYP
  FORT TRUCK SERIAL NUMBER
- MOTOR SERIAL NUMBER
  PART-NR.
- DESIRED QUANTITY OF SPARE PARTS

PARTS WITHOUT PART-NUMBER NOT REQUIRED FOR THIS APPLICATION.

300 803.00 01

0008030001.tif

https://truckmanualshub.com/

https://truckmanualshub.com/

note: engine identification codes

ADG = 350 diesel

ADF = 350 LPG

BXT = 391/392 diesel

BEQ = 392 diesel

BEU = 393 diesel

CBHA = 393 diesel

BEF = 391/392/393 LPG

CBSA = 391 CNG

BJC = 394 diesel

CBJB = 394 diesel

BMF = 394 LPG

part number + X 0 exchange part

0008031881.tif

https://truckmanualshub.com/

https://truckmanualshub.com/

Base Engine Without DistribuTor, Intake Manifold, Exhaust Manifold And Alternator ADG

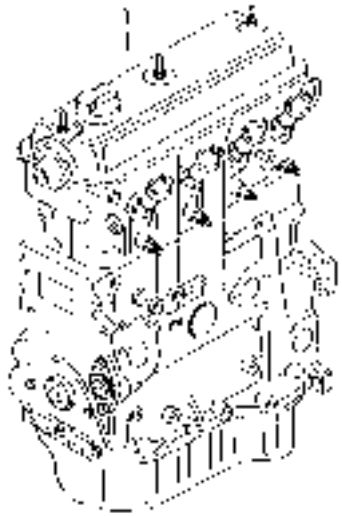

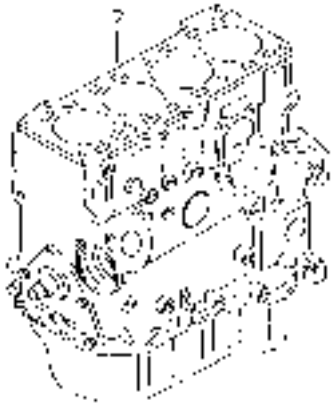

423100100.tif

https://truckmanualshub.com/

Base Engine Without DistribuTor, Intake Manifold, Exhaust Manifold And Alternator ADG

Pos.	Part-No.	I	Designation	Qantity	replaced by	Remarks
1	VW028100035K		Base Engine	1		ADG 1.9Ltr.
2	VW028100103EX		Short Engine	1		ADG 1.9Ltr.

1 = Packaged quantities 2 = Restricted availability 3 = Parts being phased out 4 = not available individually 5 = see separate list

https://truckmanualshub.com/

Base engine ADF,BEF,CBSA

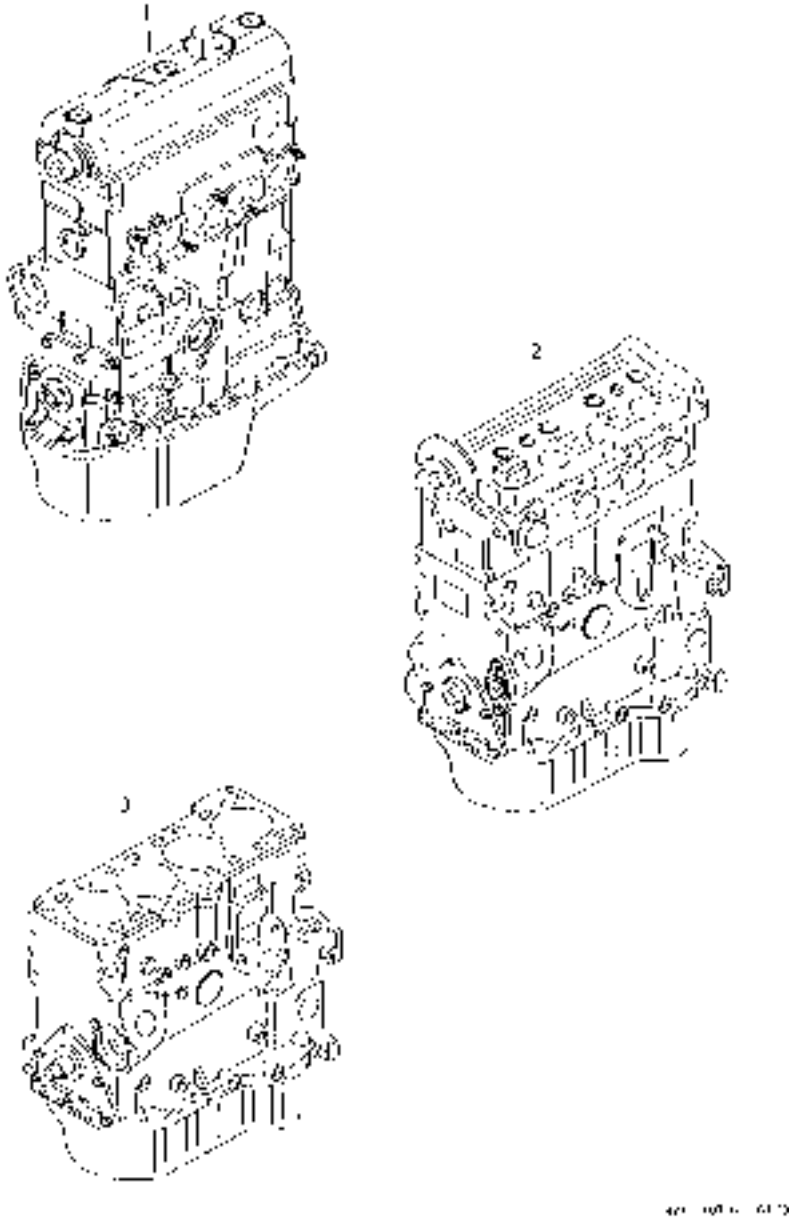

421100100.tif

https://truckmanualshub.com/

Base engine ADF,BEF,CBSA

Pos.	Part-No.	I	Designation	Qantity	replaced by	Remarks
1	VW051100031E		Base Engine	1		ADF 1.8Ltr.
2	VW06A100041B		base engine	1		BEF 2.0Ltr.
	-					BEF
2	VW06A100041A		Base engine	1		BEF 2.0Ltr.
	-		Sensor			BEF
	-		sensor			BEF
2	VW06G100031J		Base engine	1		CBSA 2.0Ltr.
	-		01/06			CBSA
2	VW06G100031BX		Base engine	1		CBSA 2.0Ltr.
	-		01/06-11/07			CBSA
2	VW06G100031JX		Base engine	1		CBSA 2.0Ltr.
	-		12/07			CBSA
	-		Short Engine With Crankshaft,			
	-		Pistons, Oil Pump And Oil Sump			
3	VW06A100105HX		Short Engine	1		BEF
	-		Oil sump without oil sensor			BEF 2.0Ltr.
3	VW06A100105GX		Short block	1		BEF
	-		Oil Sump With Oil Level			BEF
	-		Sensor			BEF

1 = Packaged quantities 2 = Restricted availability 3 = Parts being phased out 4 = not available individually 5 = see separate list

https://truckmanualshub.com/

Cylinder Block With Pistons Oil Sump ADG

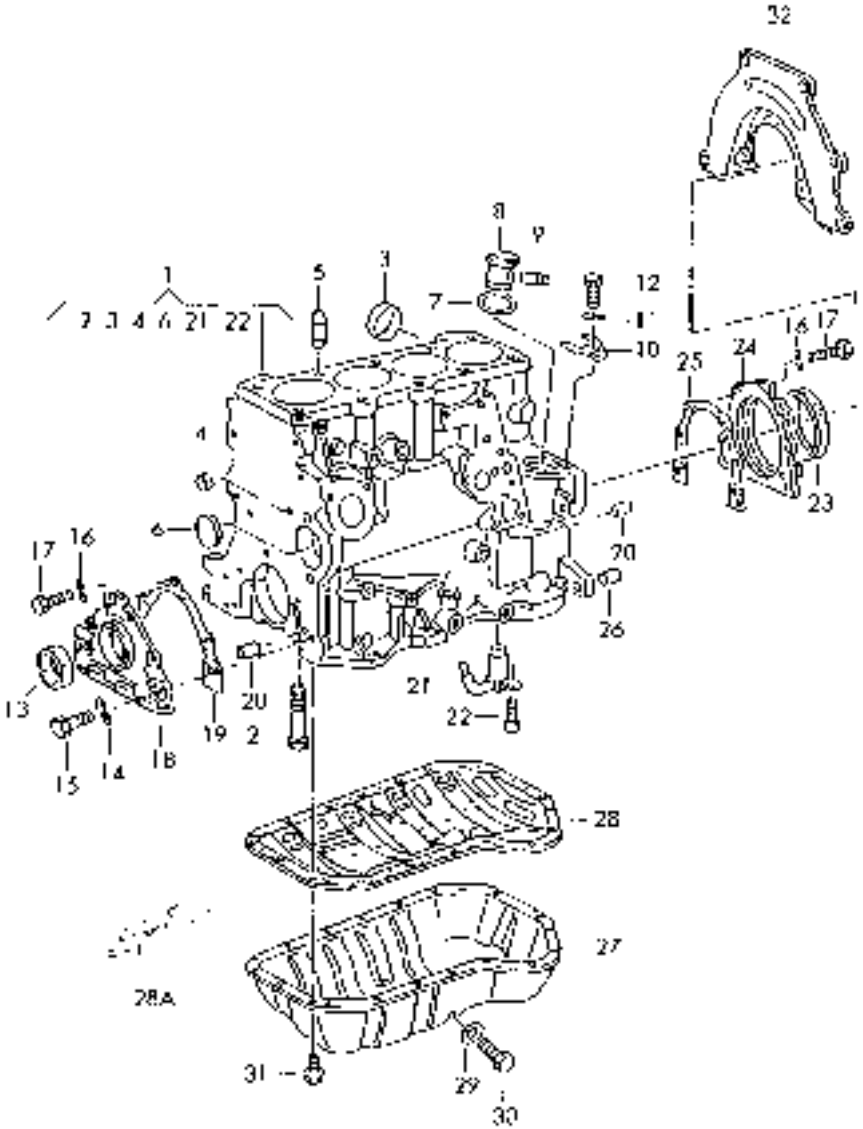

423103100.tif

https://truckmanualshub.com/

Cylinder Block With Pistons Oil Sump ADG

Pos.	Part-No.	I	Designation	Qantity	replaced by	Remarks
1	VW028103101D		Cylinder Block With Pistons	1		
2	VWN 90130001		hexagon head screw	10		
3	VW036103113A		Locking Cover	3		
4	VWN 01190710		Locking Cover	2		
5	VW028103039A		Sleeve	1		
6	VW036103113A		Locking Cover	2		
7	VW056905261		Seal	1		
8	VW056103541		Bush	1		
9	VW056103117		Plug	1		
9	VWN 0162011		Cup Rivet	X		
13	VW068103085E		oil seal	3		
14	VWN 01224110		Spring Washer	X		
15	VWN 01024016		Hexagonal Head Bolt	1		
16	VWN 01152426		Washer	X		
17	VWN 01021723		Hexagonal Head Bolt	X		
18	VW051103152		Sealing Flange	1		
19	VW026103161B		Gasket	1		
20	VWN 0432072		Dowel Pin	4		
21	VW068103157D		nozzle	4		
22	VWN 90241501		Allen Key Head	4		
	-		Bolt			
23	VW068198171		sealing kit	1		
	-		Flange			
24	VW028103171B		Sealing Flange	1		Rear
25	VW026103181B		Gasket	1		
26	VW022103139		Dowel Sleeve	2		
27	VW051103601		Oil Sump	1		

1 = Packaged quantities 2 = Restricted availability 3 = Parts being phased out 4 = not available individually 5 = see separate list

https://truckmanualshub.com/

Cylinder Block With Pistons Oil Sump ADG

Pos.	Part-No.	I	Designation	Qantity	replaced by	Remarks
28	VW037115220B		Baffle	1		
28A	VWD 176404A2		Silicone Sealant	1		
29	VWN 0138492		Seal	1		
30	VWN 90288901		Sealing Plug	1		
31	VWN 90592703		Bolt, Hex. Hd. With Shoulder,	20		
	-		Self-Locking			
32	VW056103551B		Intermediate Plate	1		
32	VW06B103551G		Intermediate Plate	1		
-	VW028198011D		cylinder block gasket set	1		

1 = Packaged quantities 2 = Restricted availability 3 = Parts being phased out 4 = not available individually 5 = see separate list

https://truckmanualshub.com/

https://truckmanualshub.com/

Cylinder Block With Pistons Oil Sump ADF

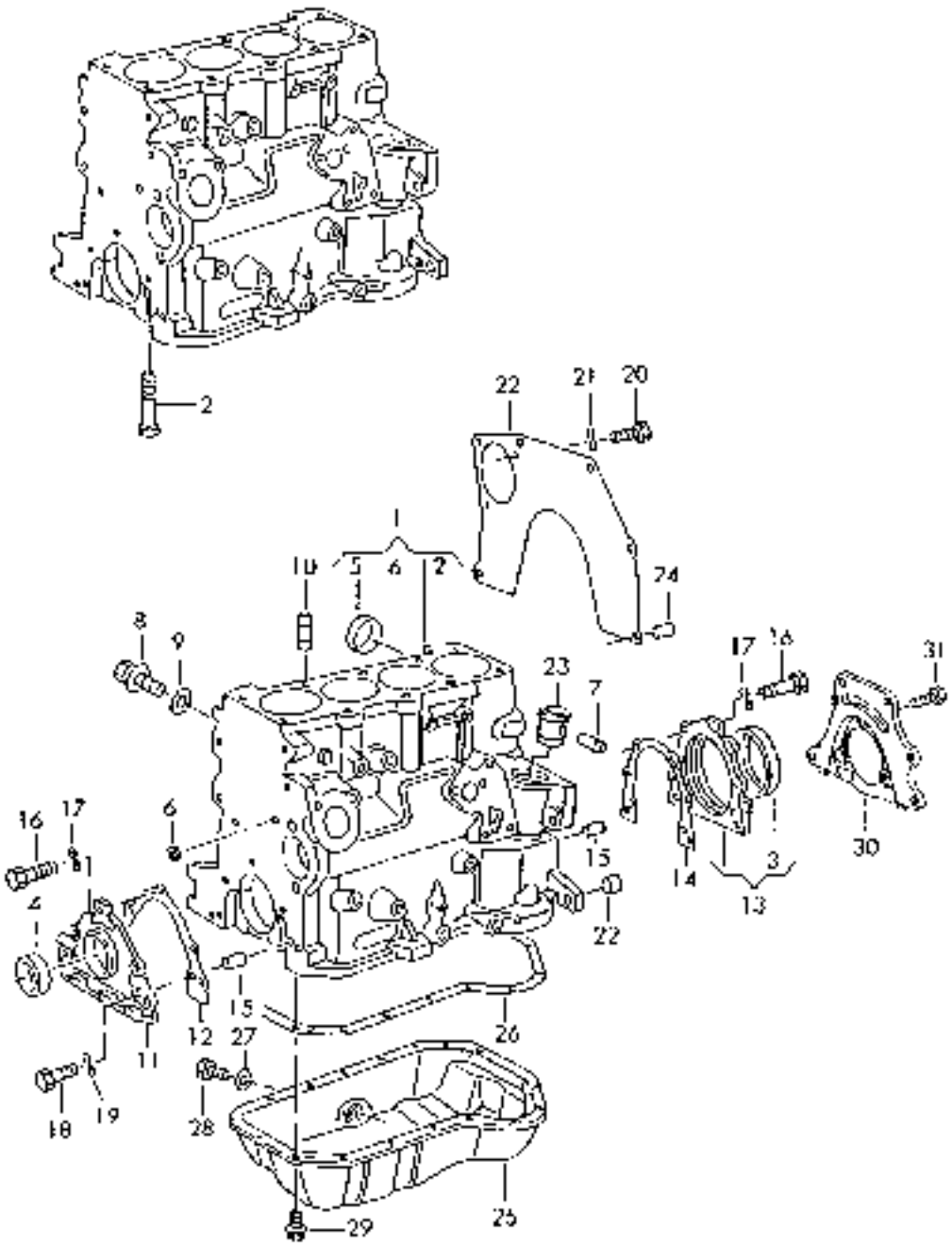

421103050.tif

https://truckmanualshub.com/

Cylinder Block With Pistons Oil Sump ADF

Pos.	Part-No.	I	Designation	Qantity	replaced by	Remarks
1	VW051103101		Cylinder Block With Pistons	1		ADF
2	VWN 10263801		Hexagonal Head Bolt	10		
3	-		Discontinued / Replacement:	1		068 198 171 F
4	VW068103085E		oil seal	1		
5	VW036103113A		Locking Cover	5		
6	VWN 01190710		Locking Cover	2		
7	VW056103117		Plug	1		
7	VWN 0162011		Cup Rivet	X		ADF
8	VWN 0297022		Sealing Plug	X		
9	VWN 0138115		Sealing Washer	X		
10	VW026103139		Parallel Dowel Pin	2		ADF
11	VW051103152		Sealing Flange	1		
12	VW026103161B		Gasket	1		
13	VW068103171F		oil seal	1		Rear
14	VW026103181B		Gasket	1		
15	VWN 0432072		Dowel Pin	4		ADF
16	VWN 01021612		Hexagonal Head Bolt	10		
17	VWN 0122265		Spring Washer	10		
18	VWN 01024016		Hexagonal Head Bolt	1		
19	VWN 01224110		Spring Washer	1		
20	VWN 0102279		Bolt, Hexagon Head	3		ADF
	-		Self-Locking			ADF
						ADF
						ADF
21	VWN 0122345		Spring Washer	3		ADF
						ADF
						ADF

1 = Packaged quantities 2 = Restricted availability 3 = Parts being phased out 4 = not available individually 5 = see separate list

https://truckmanualshub.com/

Cylinder Block With Pistons Oil Sump ADF

Pos.	Part-No.	I	Designation	Qantity	replaced by	Remarks
						ADF
22	VW056103551B		Intermediate Plate	1		ADF
						ADF
						ADF
						ADF
23	VW056103541		Bush	1		
24	VW022103139		Dowel Sleeve	2		ADF
						ADF
						ADF
						ADF
25	VW051103601		Oil Sump	1		ADF
						ADF
						ADF
						ADF
	-					ADF 051 103 609 E N 905 927 03
26	VW051103609E		Gasket	1		=>| 03.94 ADF
						=>| 03.94 ADF
						=>| 03.94 ADF
						=>| 03.94 ADF
27	VWN 0138492		Seal	1		
28	VWN 90288901		Sealing Plug	1		
29	VWN 90592703		Bolt, Hex. Hd. With Shoulder,	20		
	-		Self-Locking			
	-		Only For:			048 103 601 051 103 601
30	VW068103621E		Cover Panel	1		ADF Upper

1 = Packaged quantities 2 = Restricted availability 3 = Parts being phased out 4 = not available individually 5 = see separate list

https://truckmanualshub.com/

Cylinder Block With Pistons Oil Sump ADF

Pos.	Part-No.	I	Designation	Qantity	replaced by	Remarks
31	**VWN 90483204**		**Hexagonal Head Bolt**	**3**		**ADF**

1 = Packaged quantities **2 = Restricted availability** **3 = Parts being phased out** **4 = not available individually** **5 = see separate list**

https://truckmanualshub.com/

Cylinder Head Cylinder Head Cover ADG

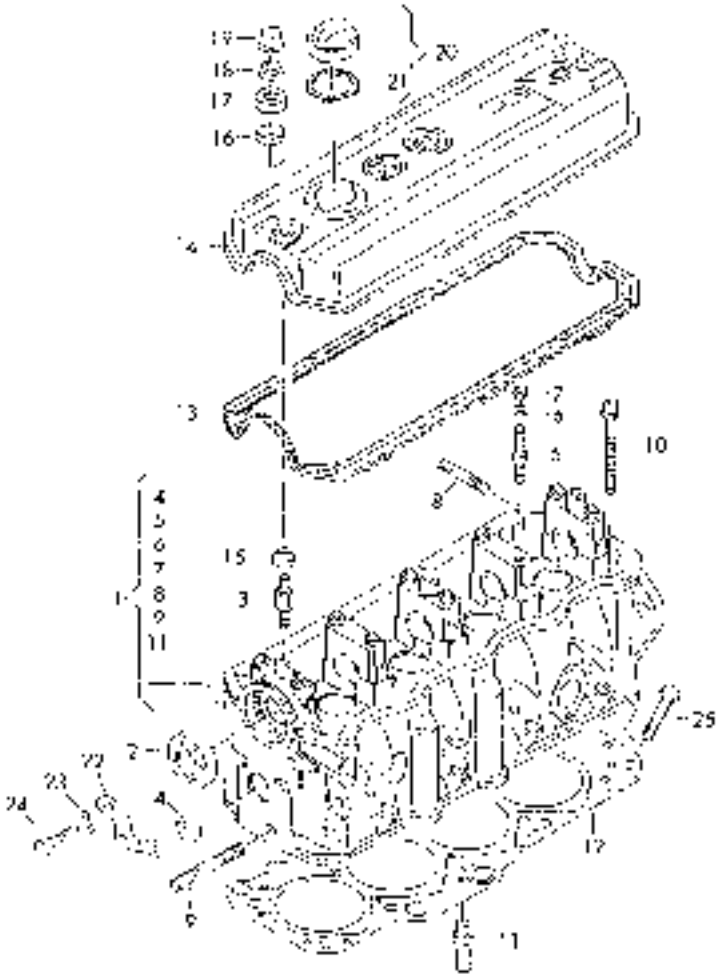

423103400.tif

https://truckmanualshub.com/

Cylinder Head Cylinder Head Cover ADG

Pos.	Part-No.	I	Designation	Qantity	replaced by	Remarks
1	VW028103351M		Cylinder Head	1		
1	VW028103265GX		cylinder head	1		
	-		And Camshaft			
2	VW068103085E		oil seal	1		
3	VW028103531B		Stud	3		
	-		Also Use:			028 103 534 A
4	VWN 01191410		Locking Cover	1		
4	VWN 0119191		Cover	1		
5	VW056103397		Stud	10		
6	VWN 01155813		Scheibe	10		
7	VWN 01100846		Hexagonal Nut	10		
8	VWN 90188902		Stud	8		
9	VWN 90080301		Stud	1		
9	VWN 0144083		Stud	1		
10	VW068103384A		bolt, cylinder head	10		
11	VW037103419B		Valve Guide	8		
12	VW028103383BH		head gasket 1 hole	1		1 Hole
12	VW028103383BJ		head gasket 2 hole	1		2 Holes
12	VW028103383BK		cylinder head gasket	1		3 Holes
13	VW028103483H		gasket	1		
14	VW028103469L		Cylinder Head Cover	1		
15	VW028103532A		Sealing Ferrule	3		
16	VW028103533		Sealing Washer	3		
17	VW028103536		Concave Washer	3		
18	VWN 90132606		Hex. Nut With Washer	3		
19	VW028103534A		Cover Cap	3		
20	VW06B103485C		locking cover	1		

1 = Packaged quantities 2 = Restricted availability 3 = Parts being phased out 4 = not available individually 5 = see separate list

https://truckmanualshub.com/

Cylinder Head Cylinder Head Cover ADG

Pos.	Part-No.	I	Designation	Qantity	replaced by	Remarks
21	VW06A103483D		gasket	1		
-	VW028198012E		gasket kit cylinder head	1		

1 = Packaged quantities 2 = Restricted availability 3 = Parts being phased out 4 = not available individually 5 = see separate list

https://truckmanualshub.com/

https://truckmanualshub.com/

Cylinder Head Cylinder Head Cover ADF

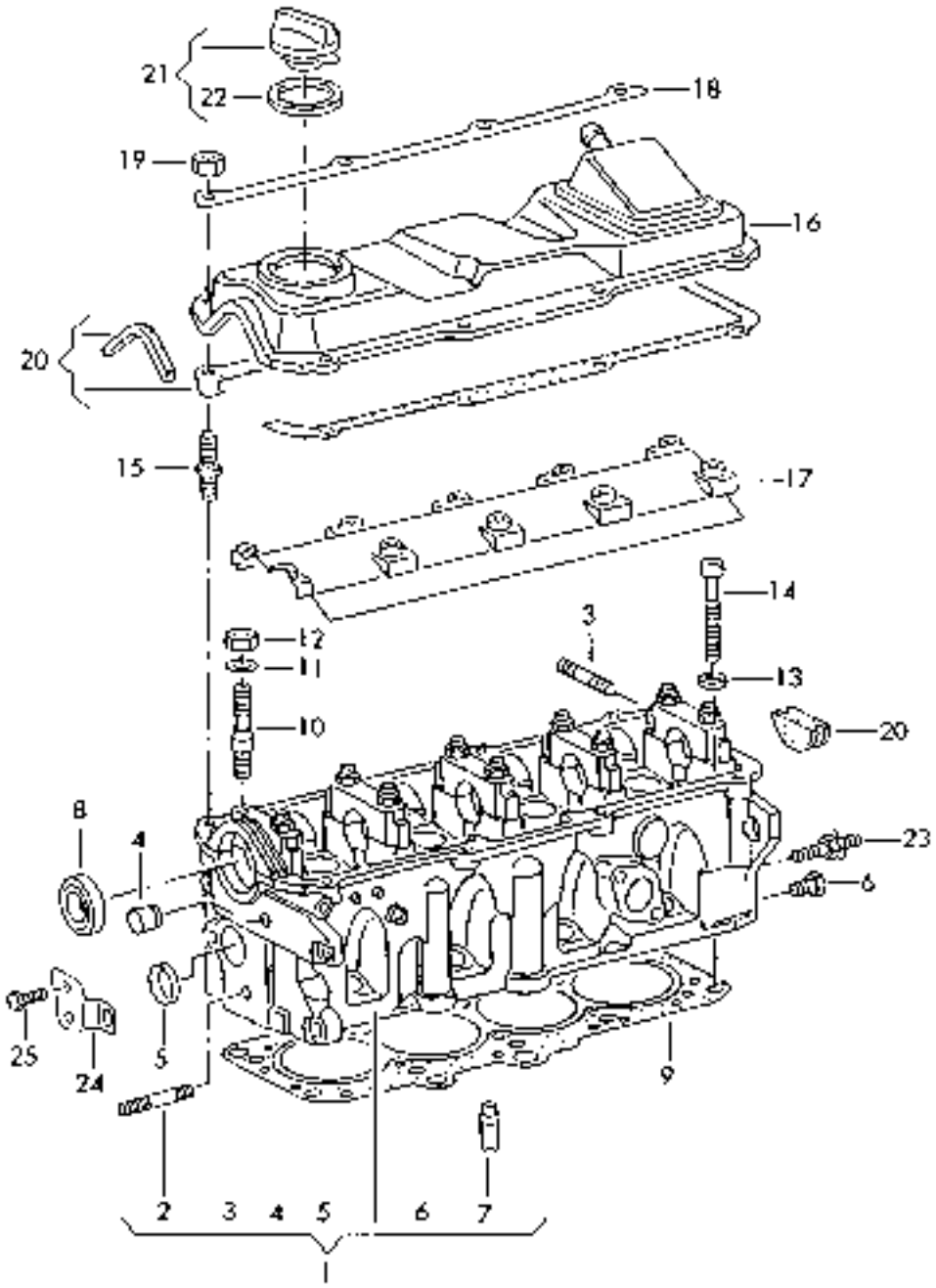

421103350.tif

https://truckmanualshub.com/

Cylinder Head Cylinder Head Cover ADF

Pos.	Part-No.	I	Designation	Qantity	replaced by	Remarks
1	VW051103351B		Cylinder Head	1		
1	VW051103265BX		Cylinder Head With Valves	1		
	-		And Camshaft			
	-		Also Use:			026 198 025 A Or 051 103 483 A
	-					026 103 113 B
-	VW051103483A		Gasket	1		
-	VW026103113B		Locking Cover	1		
3	VWN 0444115		Stud	8		
4	VW035103379		Plug	2		
5	VWN 01191410		Locking Cover	1		
6	VWN 0160243		Sealing Plug	1		
7	VW056103419A		Valve Guide	8		
8	VW068103085E		oil seal	1		
9	VW026103383P		cylinder head gasket			
	-		M ADF>> 001 080*			
9	VW050103383B		Cylinder Head Gasket (Metal)			
	-		M ADF 001 081>>*			
10	VW056103397		Stud	10		
11	VW026109629		Washer	8		
12	VWN 01100846		Hexagonal Nut	10		
13	VW056103377		Washer	10		
14	VW049103384B		Bolt, With Multi-Spilne			
	-		multipoint head			
	-		M ADF>> 001 080*			
	-		To Be Used For:			026 103 383 P
14	VW050103384		Bolt, With Multi-Spilne			

1 = Packaged quantities 2 = Restricted availability 3 = Parts being phased out 4 = not available individually 5 = see separate list

https://truckmanualshub.com/

Cylinder Head Cylinder Head Cover ADF

Pos.	Part-No.	I	Designation	Qantity	replaced by	Remarks
	-		multipoint head			
	-		M ADF 001 081>>*			
	-		To Be Used For:			050 103 383 B
	-		Marked With:			3 NOPPEN
15	VW026103400A		Stud With Shoulder	8		
15	VWN 10419101		Stud	8		
	-		(for Modified Vehicles)			
	-		See parts bulletin:			1-75 6/1996
16	VW026103469E		Cylinder Head Cover	1		
17	VW026103547		Oil Deflector	1		
18	VW056103591		Strip	2		
19	VWN 01100636		Hexagonal Nut	1		
20	VW026198025A		Set Of Gaskets For	1		
	-		Cylinder Head Cover			
	-		For Stud With Shoulder			
21	VW06B103485C		locking cover	1		
22	VW06A103483D		gasket	1		
-	VW026198012AB		Gasket Set For	1		
-	VW026198012AC		Set Of Gaskets For	1		
	-		Exchange Cylinder Head			

1 = Packaged quantities 2 = Restricted availability 3 = Parts being phased out 4 = not available individually 5 = see separate list

https://truckmanualshub.com/

https://truckmanualshub.com/

Ventilation For Cylinder Head Cover ADF

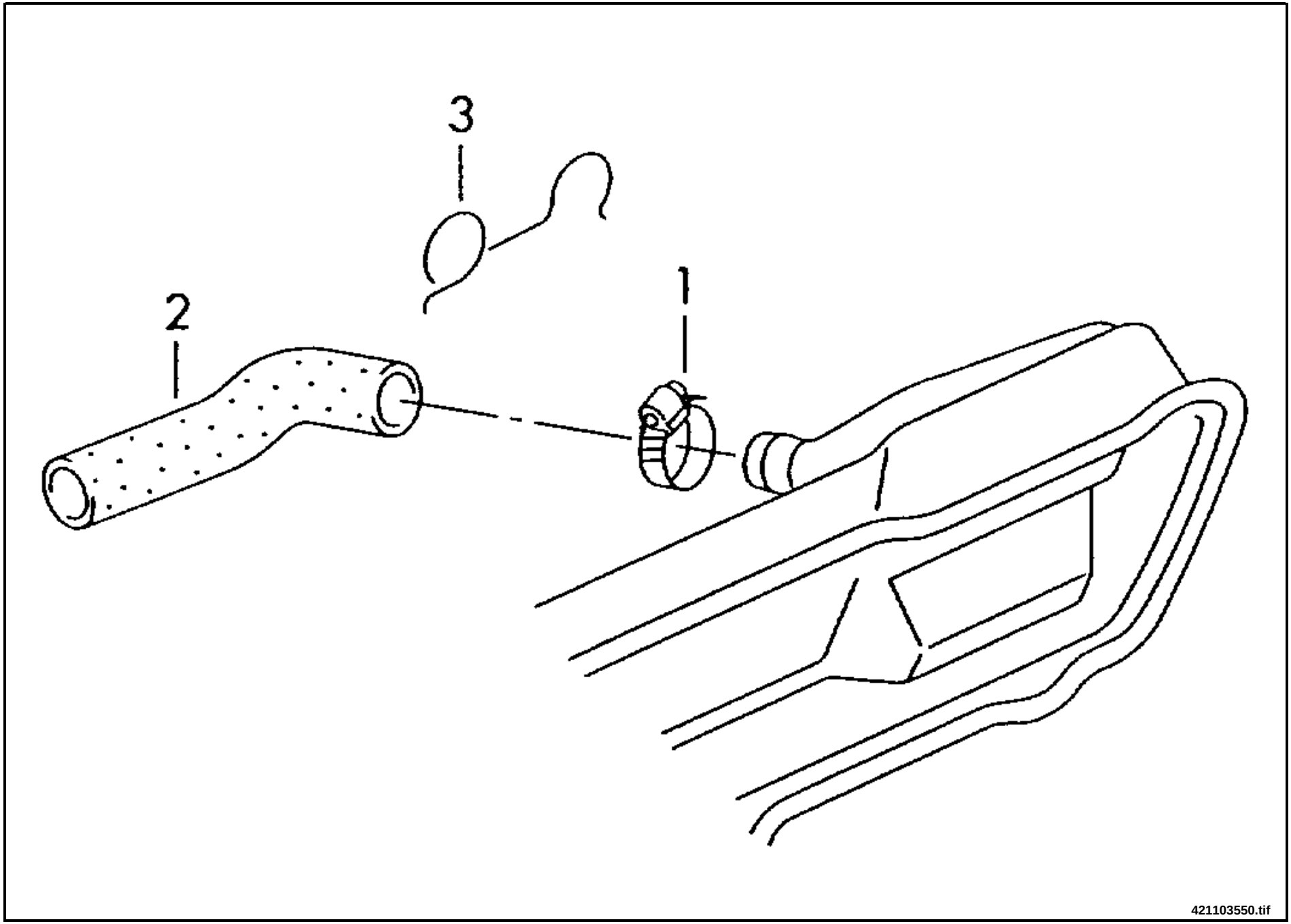

https://truckmanualshub.com/

Ventilation For Cylinder Head Cover ADF

Pos.	Part-No.	I	Designation	Qantity	replaced by	Remarks
1	VWN 90561801		Pipe Clip	1		ADF
2	VW056103493		Air Hose	1		

1 = Packaged quantities 2 = Restricted availability 3 = Parts being phased out 4 = not available individually 5 = see separate list

https://truckmanualshub.com/

Ventilation For Cylinder Block ADG,BXT,BEQ,BEU,BJC

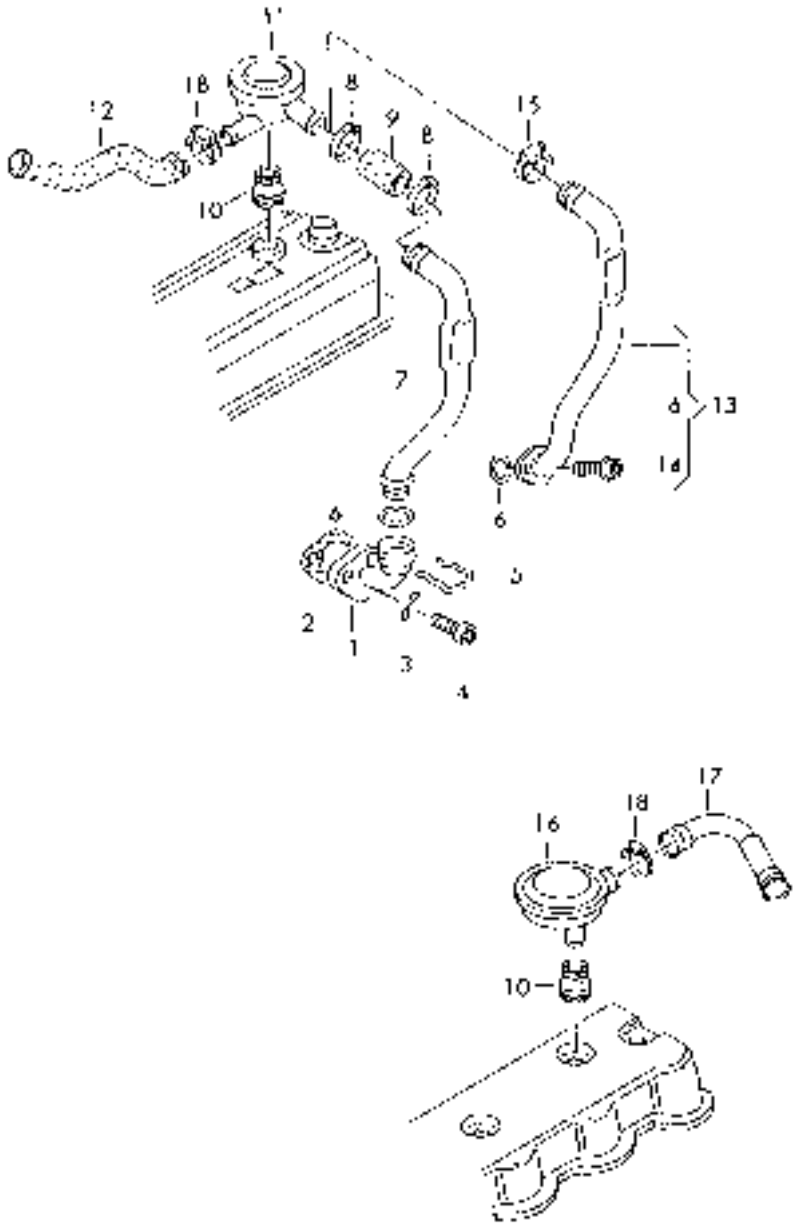

423103600.tif

https://truckmanualshub.com/

Ventilation For Cylinder Block ADG,BXT,BEQ,BEU,BJC

Pos.	Part-No.	I	Designation	Qantity	replaced by	Remarks
6	VWN 90466301		Round Seal	1		ADG
10	VW028103500		Gasket	1		
11	VW028129101D		Pressure Regulating Valve	1		ADG
12	VW028103493T		Air Hose	1		ADG
13	VW028103491J		pipe	1		ADG
14	VWN 90221803		Allen Key Head Bolt	2		ADG
	-		(combi)			ADG
15	VWN 10449101		Pipe Clip	1		ADG
16	VW028129101E		Pressure Regulating Valve	1		BEU,BJC
16	VW038129101A		Pressure Regulating Valve	1		BXT,BEQ
17	VW038103493D		Air Hose	1		BXT,BEQ
17	VW038103493P		Air Hose	1		BEU
18	VWN 10258101		Pipe Clip	1		BXT,BEQ,BEU,BJC
-	VWN 90687001		Spring-Type Clip	1		BXT,BEQ

1 = Packaged quantities 2 = Restricted availability 3 = Parts being phased out 4 = not available individually 5 = see separate list

https://truckmanualshub.com/

Crankshaft Conrod Bearings ADG

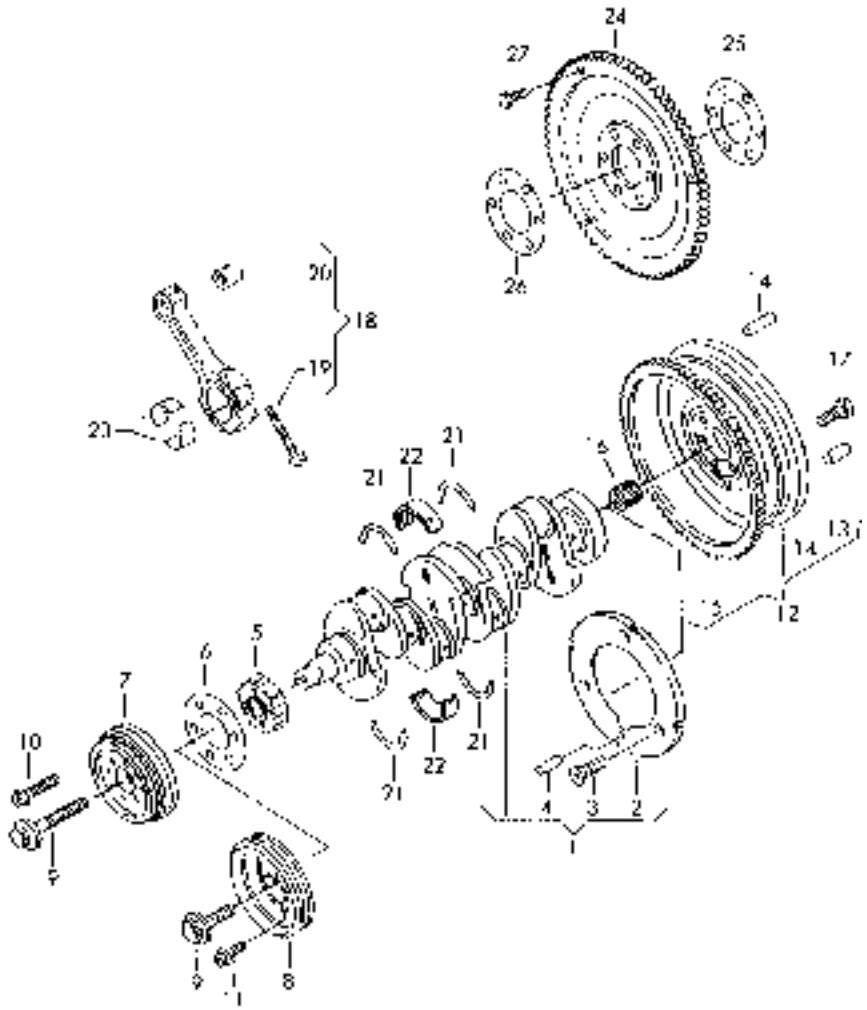

423105050.tif

https://truckmanualshub.com/

Crankshaft Conrod Bearings ADG

Pos.	Part-No.	I	Designation	Qantity	replaced by	Remarks
1	VW028105101L		CrankshaftM 024 717>>	1		
5	VW028105263D		Toothed Belt PulleyM 024 717>>	1		
8	VW068105255E		Dual Pulley	1		
9	VWN 90577101		12-Point Head Bolt	1		
11	VWN 0147068		Sechskantschraube	4		
	-		Bolt			
	-		Also Use:			N 012 241 10
-	VWN 01224110		Spring Washer	4		
15	VW026105275		Starter Ring	1		
18	VW028198401E		1 Set: Connecting Rods	1		
19	VW028105425C		con rod bolt	8		
20	VW028105431D		bearing	4		
21	VW026198421		crankshaft thrust bearing set	1		Bearing 3
22	VW026198491		crankshaft bearings	5		Upper/Lower
	-		Bearings 1-5			
22	VW068198493		1 Set: Crankshaft Bearings	X		0.25 U.S.
	-		Bearings 1-5			Upper/Lower
22	VW068198495		1 Set: Crankshaft Bearings	X		0.5 U.S.
	-		Bearings 1-5			Upper/Lower
22	VW068198497		1 Set: Crankshaft Bearings	X		0.75 U.S.
	-		Bearings 1-5			Upper/Lower
23	VW033105701		con rod bearing	8		
23	VW033105707		Connecting Rod Bearing Shell	X		0.25 U.S.
23	VW033105713		Connecting Rod Bearing Shell	X		0.5 U.S.
23	VW033105719		Connecting Rod Bearing Shell	X		0.75 U.S.

1 = Packaged quantities 2 = Restricted availability 3 = Parts being phased out 4 = not available individually 5 = see separate list

https://truckmanualshub.com/

Crankshaft Conrod Bearings ADF

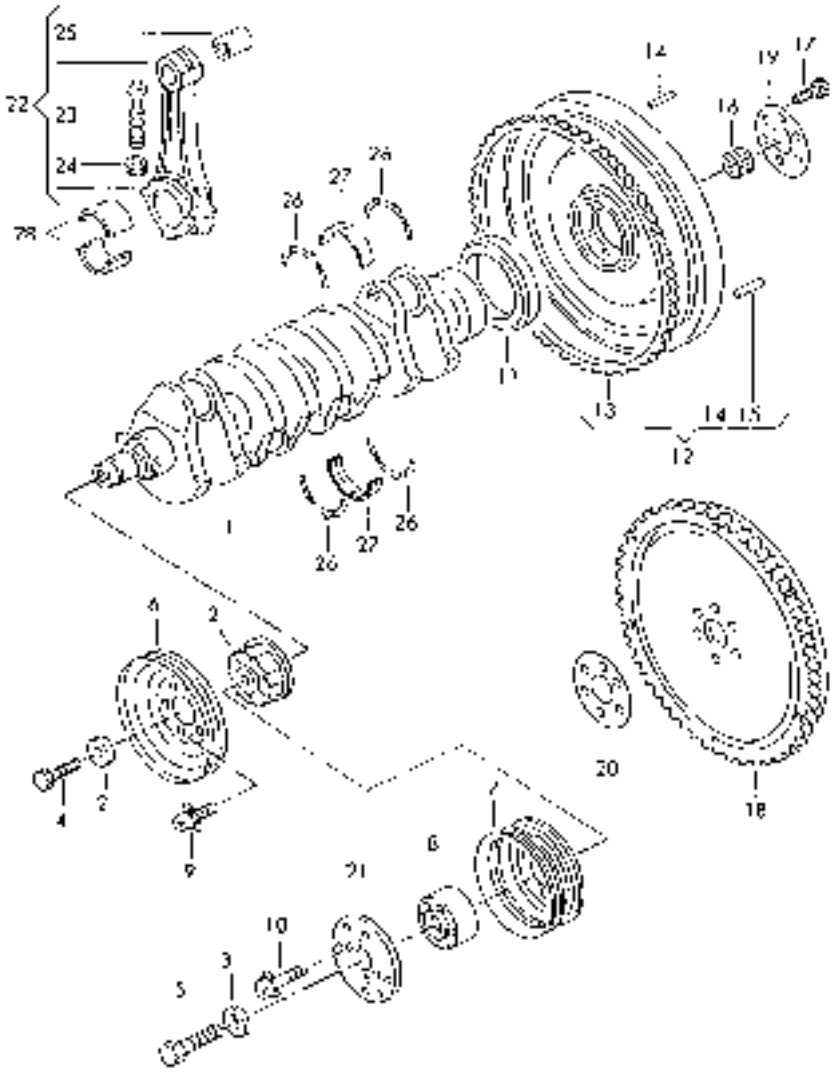

421105150.tif

https://truckmanualshub.com/

Crankshaft Conrod Bearings ADF

Pos.	Part-No.	I	Designation	Qantity	replaced by	Remarks
1	VW026105101F		Crankshaft	1		
2	VW049105263C		Toothed Belt Pulley	1		
4	VWN 90320802		12-Point Head Bolt	X		
6	VW026105255		V-Belt Pulley	1		
9	VWN 90308607		Hexagon Socket Head Bolt With	4		
	-		Collar			
13	VW026105275		Starter Ring	1		
16	VW056105313C		Needle Bearing -	1		
22	VW027198401B		1 Set: Connecting Rods	1		
23	VW048105425		Connecting Rod Bolt,Pressed In	8		
	-		(torque Angle Method)			
24	VW048105427		Hexagonal Nut	8		
25	VW053105431B		Bush - Connecting Rod	4		
26	VW026198421		crankshaft thrust bearing set	1		Upper/Lower Bearing 3
27	VW056105567B		Crankshaft Bearing Shell	X		0.25 U.S. Upper Bearings 1-5
27	VW056105573B		Crankshaft Bearing Shell	X		0.5 U.S. Upper Bearings 1-5
27	VW056105579B		Crankshaft Bearing Shell	X		0.75 U.S. Upper Bearings 1-5
27	VW026198491		crankshaft bearings	4		Upper/Lower Bearing 4
	-					026 198 491 A
27	VW026198491A		bearing set	1		Upper/Lower Bearing 4
27	VW068198493		1 Set: Crankshaft Bearings	X		0.25 U.S. Upper/Lower Bearings 1-3,5

1 = Packaged quantities 2 = Restricted availability 3 = Parts being phased out 4 = not available individually 5 = see separate list

https://truckmanualshub.com/

Crankshaft Conrod Bearings ADF

Pos.	Part-No.	I	Designation	Qantity	replaced by	Remarks
	-		MITVERWENDEN:			Bearing 4 056 105 567 B
27	VW068198495		1 Set: Crankshaft Bearings	X		0.5 U.S. Bearing 4 Bearings 1-3,5
	-					056 105 573 B
27	VW068198497		1 Set: Crankshaft Bearings	X		0.75 U.S. Bearing 4 Bearings 1-3,5
	-					056 105 579 B
28	VW034105701		Connecting Rod Bearing Shell	8		
	VW034105701 007		Yellow			
28	VW034105707		Connecting Rod Bearing Shell	X		0.25 U.S.
	VW034105707 007		Yellow			
28	VW034105713		Connecting Rod Bearing Shell	X		0.5 U.S.
	VW034105713 007		Yellow			
28	VW034105719		Connecting Rod Bearing Shell	X		0.75 U.S.
	VW034105719 007		Yellow			

1 = Packaged quantities 2 = Restricted availability 3 = Parts being phased out 4 = not available individually 5 = see separate list

https://truckmanualshub.com/

https://truckmanualshub.com/

Piston Piston Ring ADG,BXT,BEQ,BEU,BJC

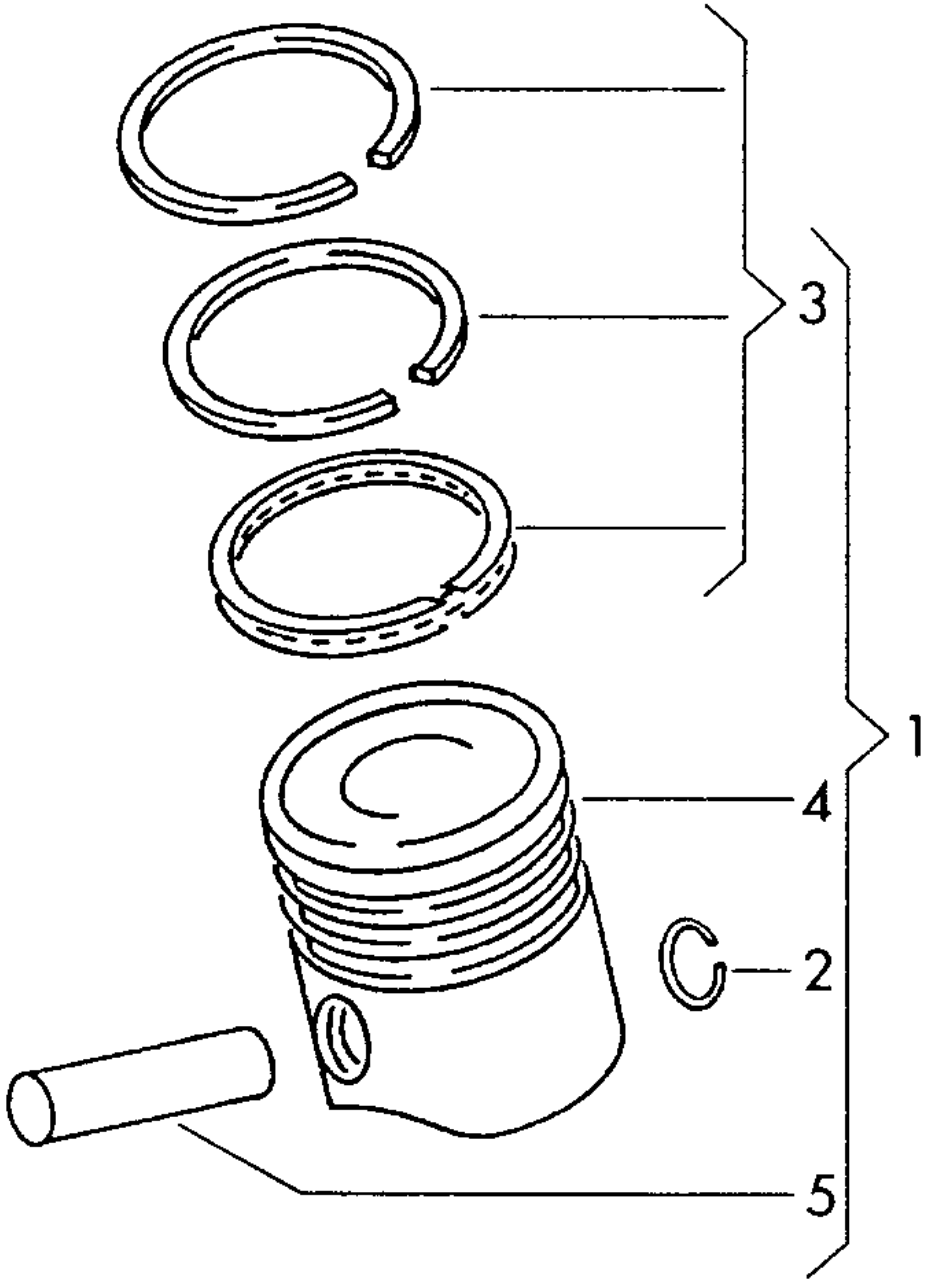

117107000.tif

https://truckmanualshub.com/

Piston Piston Ring ADG,BXT,BEQ,BEU,BJC

Pos.	Part-No.	I	Designation	Qantity	replaced by	Remarks
1	VW028107065CF		iston Complete	4		ADG
	VW028107065CF001		Blue			
	VW028107065CF003		Pink			
1	VW038107065H		Piston Complete	2		BEU Cylinders 1,2 MAHLE
	VW038107065H 001		Blue			
	VW038107065H 003		Pink			
1	VW038107065J		Piston Complete	2		BEU Cylinders 3,4 MAHLE
	VW038107065J 001		Blue			
	VW038107065J 003		Pink			
1	VW038107065AA		Piston Complete	2		BXT,BEQ,BJC Cylinders 1,2 MAHLE
	VW038107065AA001		piston blue			
	VW038107065AA003		piston pink			
1	VW038107065AB		Piston Complete	2		BXT,BEQ,BJC Cylinders 3,4 MAHLE
	VW038107065AB001		piston blue			
	VW038107065AB003		piston pink			
1	VW028107081		piston assy	X		ADG
2	VWN 10133301		Spring Ring	8		BXT,BEQ,BEU,BJC
2	VWN 0122771		Securing Ring	8		ADG
3	VW038198151		piston ring set	4		ADG,BXT,BEQ,BEU,BJC
						ADG,BXT,BEQ,BEU,BJC
						ADG,BXT,BEQ,BEU,BJC
3	VW028198155A		piston ring set	X		ADG

1 = Packaged quantities 2 = Restricted availability 3 = Parts being phased out 4 = not available individually 5 = see separate list

https://truckmanualshub.com/

Piston Piston Ring ADG,BXT,BEQ,BEU,BJC

Pos.	Part-No.	I	Designation	Qantity	replaced by	Remarks
	-		**(oversize)**			**ADG**

1 = Packaged quantities **2 = Restricted availability** **3 = Parts being phased out** **4 = not available individually** **5 = see separate list**

https://truckmanualshub.com/

https://truckmanualshub.com/

Piston Piston Ring ADF

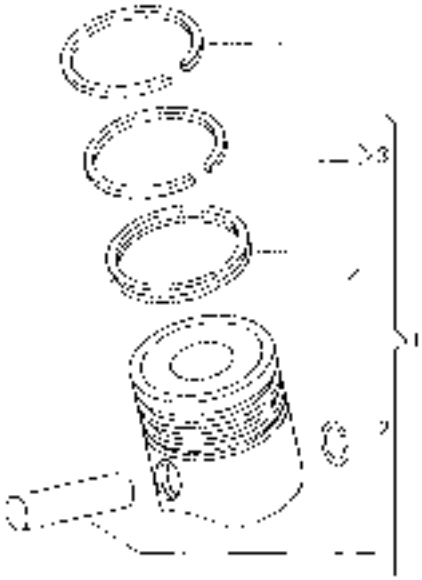

455107000.tif

https://truckmanualshub.com/

Piston Piston Ring ADF

Pos.	Part-No.	I	Designation	Qantity	replaced by	Remarks
1	VW026107065N		Piston Complete	4		ADF
1	VW026107081N		Piston Complete(oversize)	X		ADF
2	VWN 0122731		Securing Ring	8		ADF
3	VW026198151B		1 Set: Piston Rings	4		ADF
3	VW026198153A		1 Set: Piston Rings	X		ADF
	-		(oversize)			ADF
3	VW026198155A		1 Set: Piston Rings	X		ADF
	-		(oversize)			ADF

1 = Packaged quantities 2 = Restricted availability 3 = Parts being phased out 4 = not available individually 5 = see separate list

https://truckmanualshub.com/

Camshaft, Valves ADG

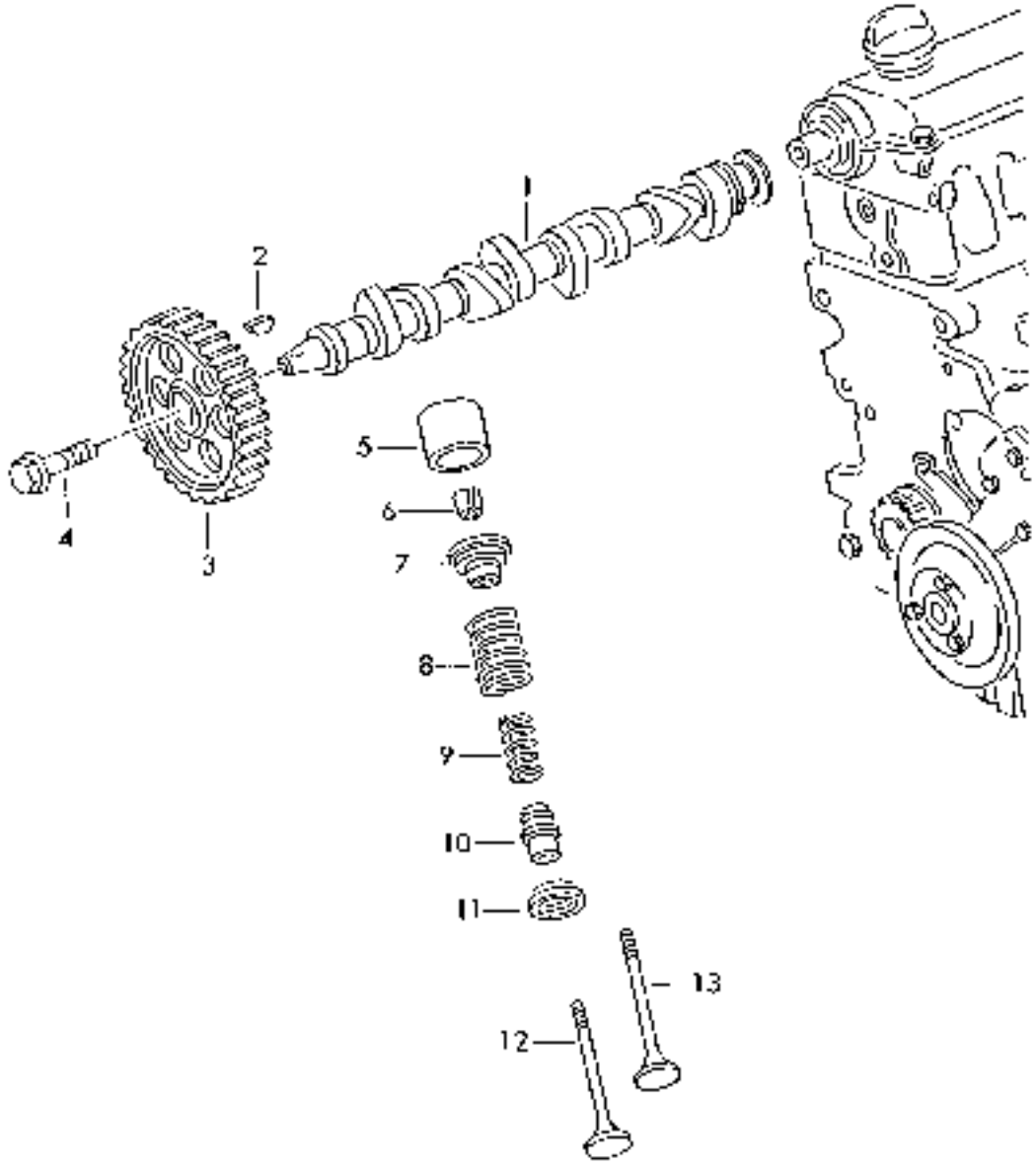

423109000.tif

https://truckmanualshub.com/

Camshaft, Valves ADG

Pos.	Part-No.	I	Designation	Qantity	replaced by	Remarks
1	VW028109101G		Camshaft	1		
2	VWN 0127082		Woodruff Key	1		
3	VW069109111		Toothed Belt Pulley	1		
4	VWN 90502103		Hexagon Head Bolt (Combi)	1		
5	VW050109309J		cam follower	8		
6	VW021109651		Cotter, Split	16		
7	VW021109641C		Spring Disc	8		Upper
8	VW028109623B		Spring - Valve	8		Outer
9	VW028109633A		Spring - Valve	8		Inner
10	VW027109675		valve seal	8		
11	VW056109629A		Spring Disc	8		Lower
12	VW028109601B		Intake Valve	4		
13	VW028109611E		Exhaust Valve	4		
-	VW056103651		Camshaft Bearing Shell	10		
	-		(undersize)			
	-		For Reconditioned Cylinder			
	-		Head Only			
-	VW056103652		Camshaft Bearing Shell	10		
	-		For Reconditioned Cylinder			
	-		Head Only			

1 = Packaged quantities 2 = Restricted availability 3 = Parts being phased out 4 = not available individually 5 = see separate list

https://truckmanualshub.com/

Camshaft, Valves ADF

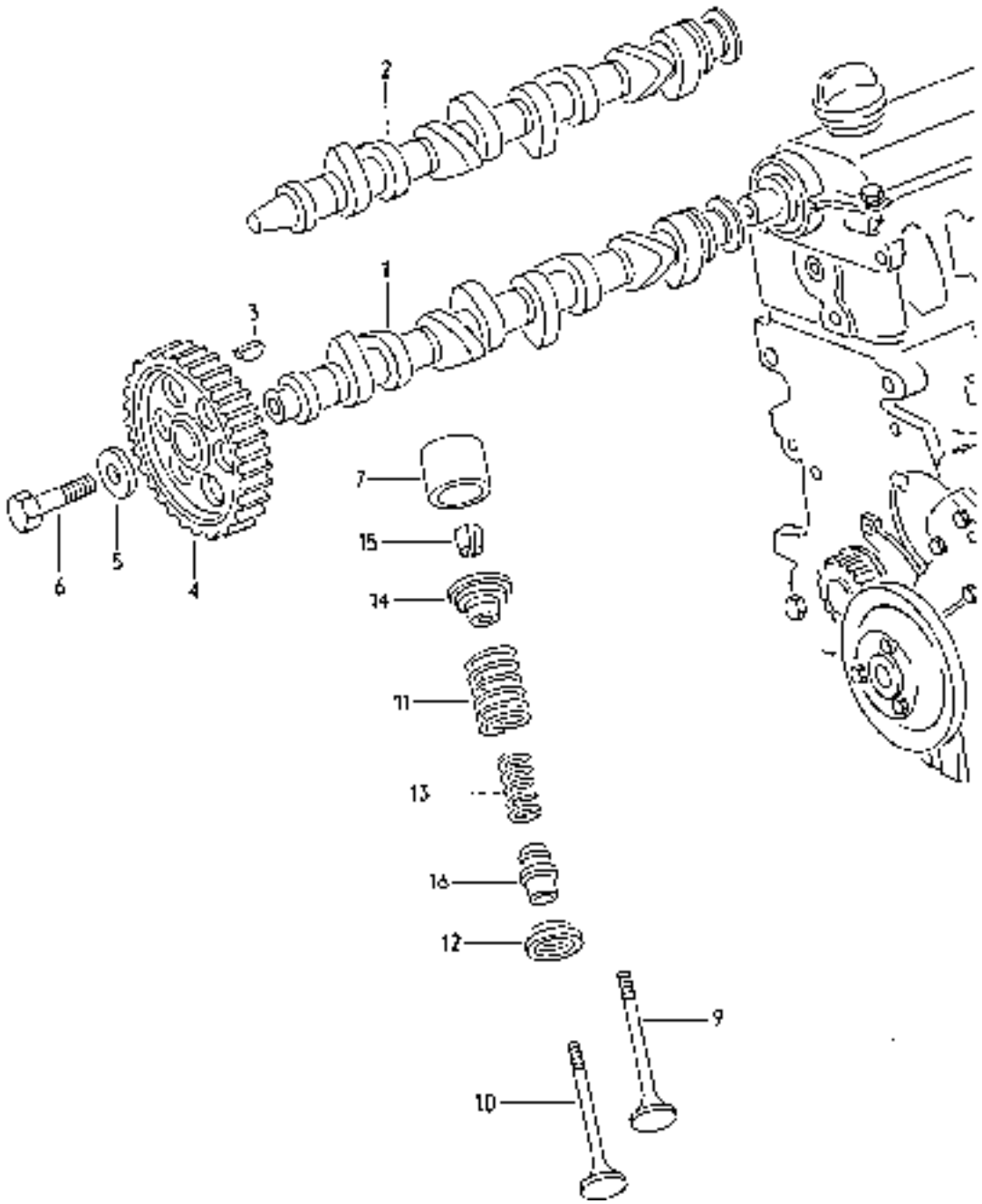

117109100.tif

https://truckmanualshub.com/

Camshaft, Valves ADF

Pos.	Part-No.	I	Designation	Qantity	replaced by	Remarks
1	VW026109101M		Camshaft	1		
3	VWN 0127082		Woodruff Key	1		
4	VW049109111C		Toothed Belt Pulley	1		
5	VW056109143		Washer	1		
6	VWN 0101371		Hexagonal Head Bolt	1		
7	VW050109309J		cam follower			
9	VW048109601E		Intake Valve			
10	VW048109611B		Exhaust Valve			
11	VW078109623C		Spring - Valve			Outer
	-		M ADF 005 796>>			
13	VW078109633A		Spring - Valve	8		Inner
14	VW078109641C		Spring Disc			Upper
	-		M ADF 005 796>>			
15	VW021109651		Cotter, Split			
16	VW027109675		valve seal			
	-		M ADF 005 796>>			

1 = Packaged quantities 2 = Restricted availability 3 = Parts being phased out 4 = not available individually 5 = see separate list

https://truckmanualshub.com/

Toothed Belt Toothed Belt Cover ADG

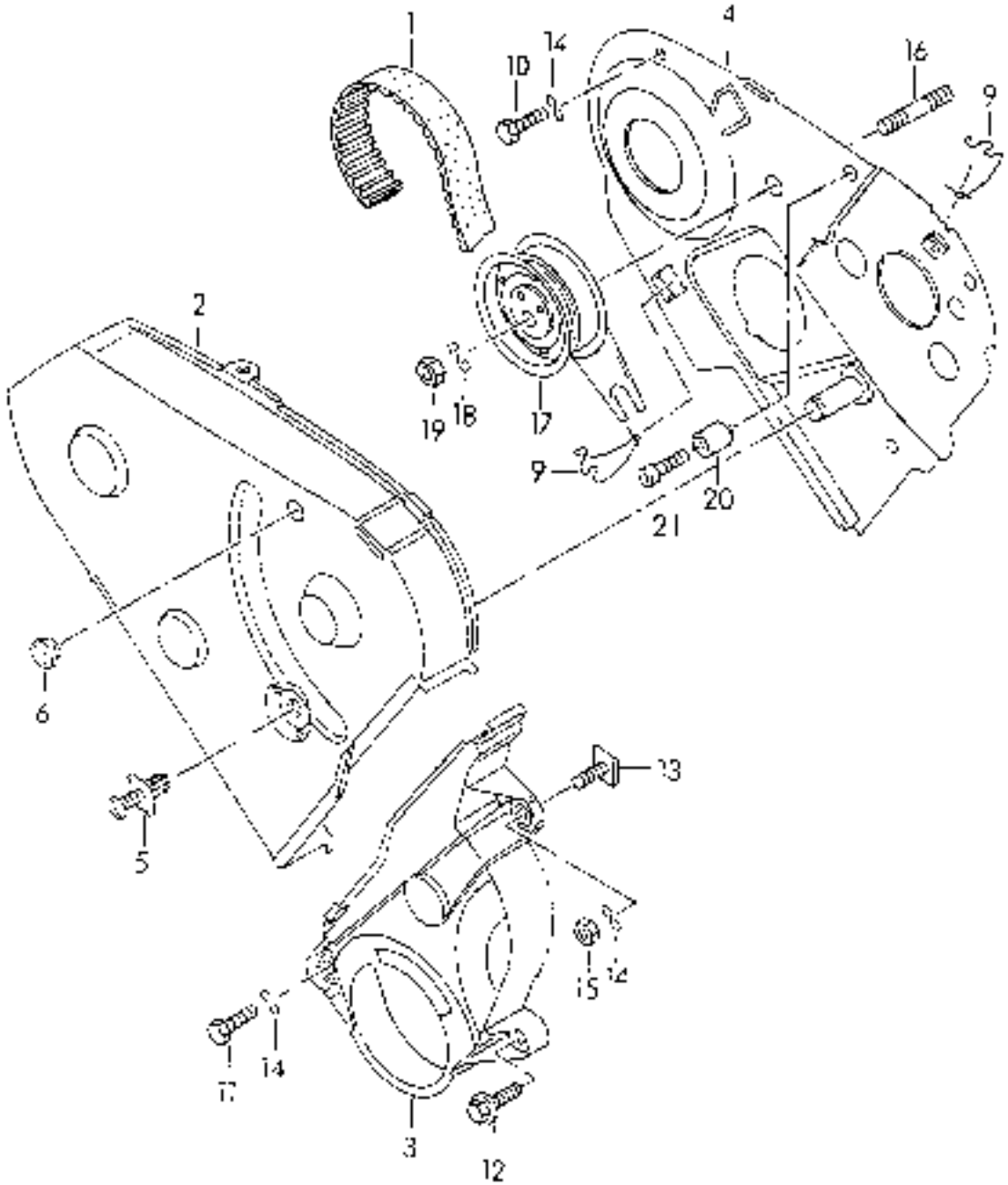

117109600.tif

https://truckmanualshub.com/

Toothed Belt Toothed Belt Cover ADG

Pos.	Part-No.	I	Designation	Qantity	replaced by	Remarks
1	VW028109119P		cam belt	1		
2	VW028109123E		tooth protection	1		Upper
3	VW028109127C		tooth protection	1		Lower
4	VW028109143C		Cover Panel	1		
-	VW028109178A		Clips	1		
5	VW028109132		Plug	1		
6	VW8A0831449		Plug	1		
9	VW069109150		Spring Clamp	3		
10	VWN 01021226		Hexagonal Head Bolt	2		
11	VWN 01021533		Hexagonal Head Bolt	1		
12	VWN 0903151		Hexagon Head Bolt (Combi)	1		
13	VWN 90053401		T-Head Screw	1		
14	VWN 0152761		Washer	X		
15	VWN 01100636		Hexagonal Nut	1		
16	VWN 0144083		Stud	1		
17	VW028109243F		cam belt tensioner	1		
18	VWN 01155813		Scheibe	2		
19	VWN 90074404		Mutter	1		
-	VW028198119A		Repair Kit For Toothed Belt	1		
	-		With Tensioning Roller			

1 = Packaged quantities 2 = Restricted availability 3 = Parts being phased out 4 = not available individually 5 = see separate list

https://truckmanualshub.com/

Toothed Belt Toothed Belt Cover ADF

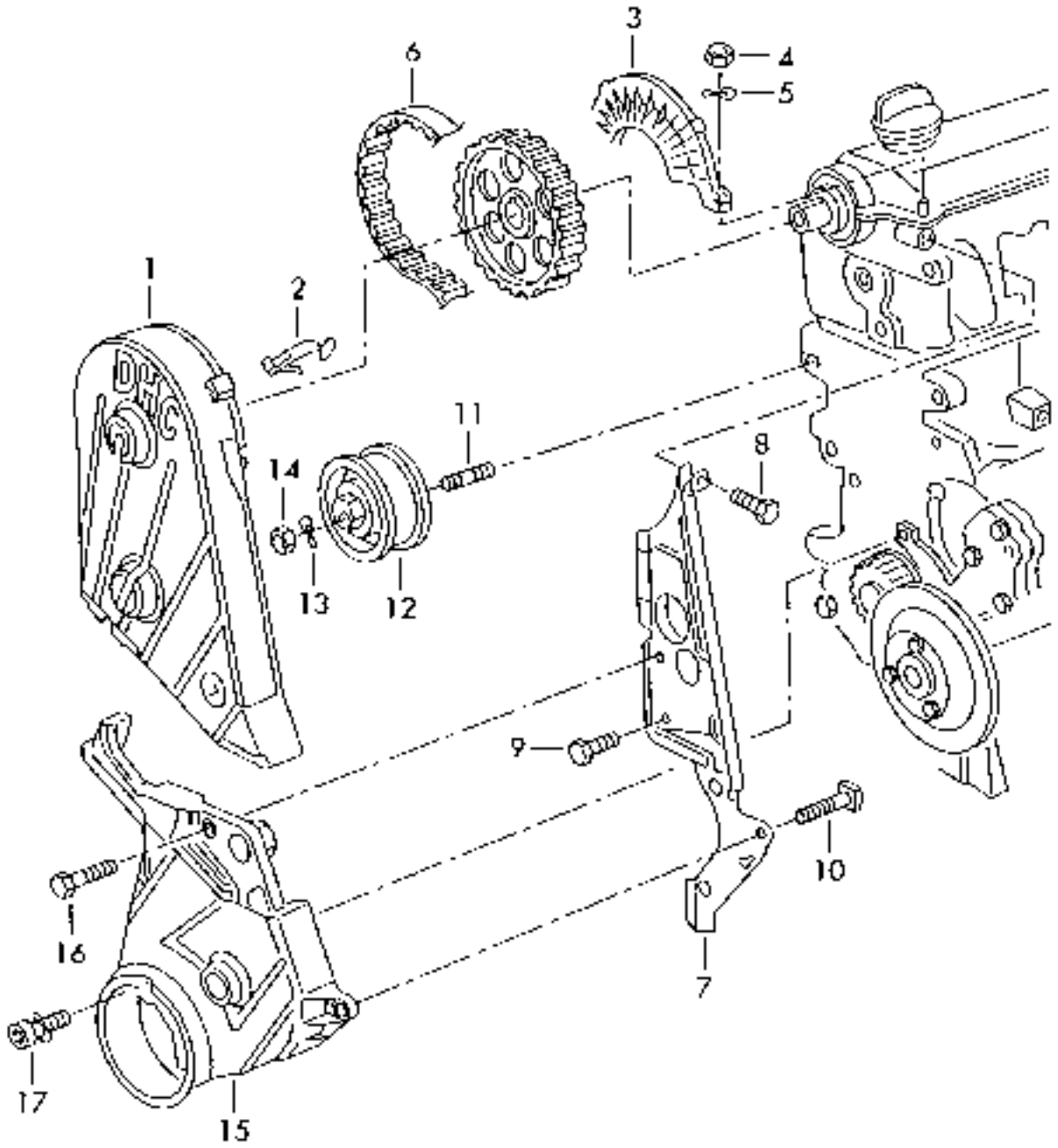

421109450.tif

https://truckmanualshub.com/

Toothed Belt Toothed Belt Cover ADF

Pos.	Part-No.	I	Designation	Qantity	replaced by	Remarks
1	VW026109107B		Toothed Belt Cover	1		Upper
-	VW049109291A		Plug	1		
2	VW026109150A		Spring Clamp	2		
3	VW026109173A		covering	1		Upper
4	VWN 01100636		Hexagonal Nut	3		
5	VWN 01152426		Washer	2		
6	VW056109119A		Toothed Belt	1		
7	VW026109129E		Cover Panel	1		
8	VWN 90296401		Stud	1		
9	VW111821145		Hexagonal Head Bolt	1		
10	VWN 90053401		T-Head Screw	1		
11	VWN 90296401		Stud	1		
12	VW026109243L		Tensioning Roller	1		
13	VWN 0122314		Spring Washer	1		
14	VWN 0111337		Hexagonal Nut	1		
15	VW026109175B		Toothed Belt Cover	1		Lower
16	VWN 01024123		Hexagonal Head Bolt	1		
17	VWN 01470514		Allen Key Head	2		
	-		Bolt			
	-		Also Use:			N 012 226 5
-	VWN 0122265		Spring Washer	1		
-	VW051198119		Repair Kit For Toothed Belt	1		
	-		With Tensioning Roller			

1 = Packaged quantities 2 = Restricted availability 3 = Parts being phased out 4 = not available individually 5 = see separate list

https://truckmanualshub.com/

Repair Kit For Toothed Belt With Tensioning Roller ADF,BEF,CBSA

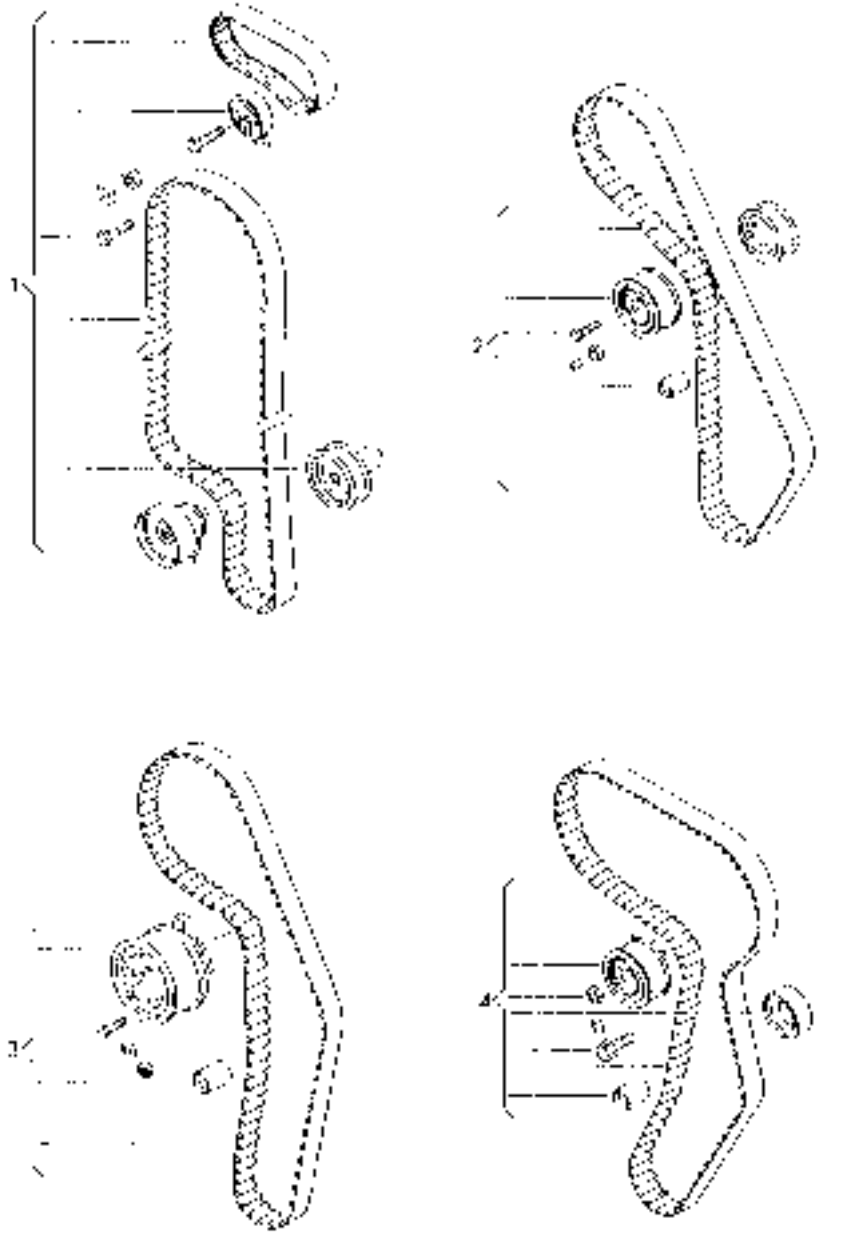

420109000.tif

https://truckmanualshub.com/

Repair Kit For Toothed Belt With Tensioning Roller ADF,BEF,CBSA

Pos.	Part-No.	I	Designation	Qantity	replaced by	Remarks
2	VW051198119		Repair Kit For Toothed Belt	1		ADF
	-		With Tensioning Roller			ADF
2	VW06A198119		Repair Kit For Toothed Belt	1		BEF,CBSA
	-		With Tensioning Roller			BEF,CBSA

1 = Packaged quantities 2 = Restricted availability 3 = Parts being phased out 4 = not available individually 5 = see separate list

https://truckmanualshub.com/

Oil Filter Oil filter bracket ADG

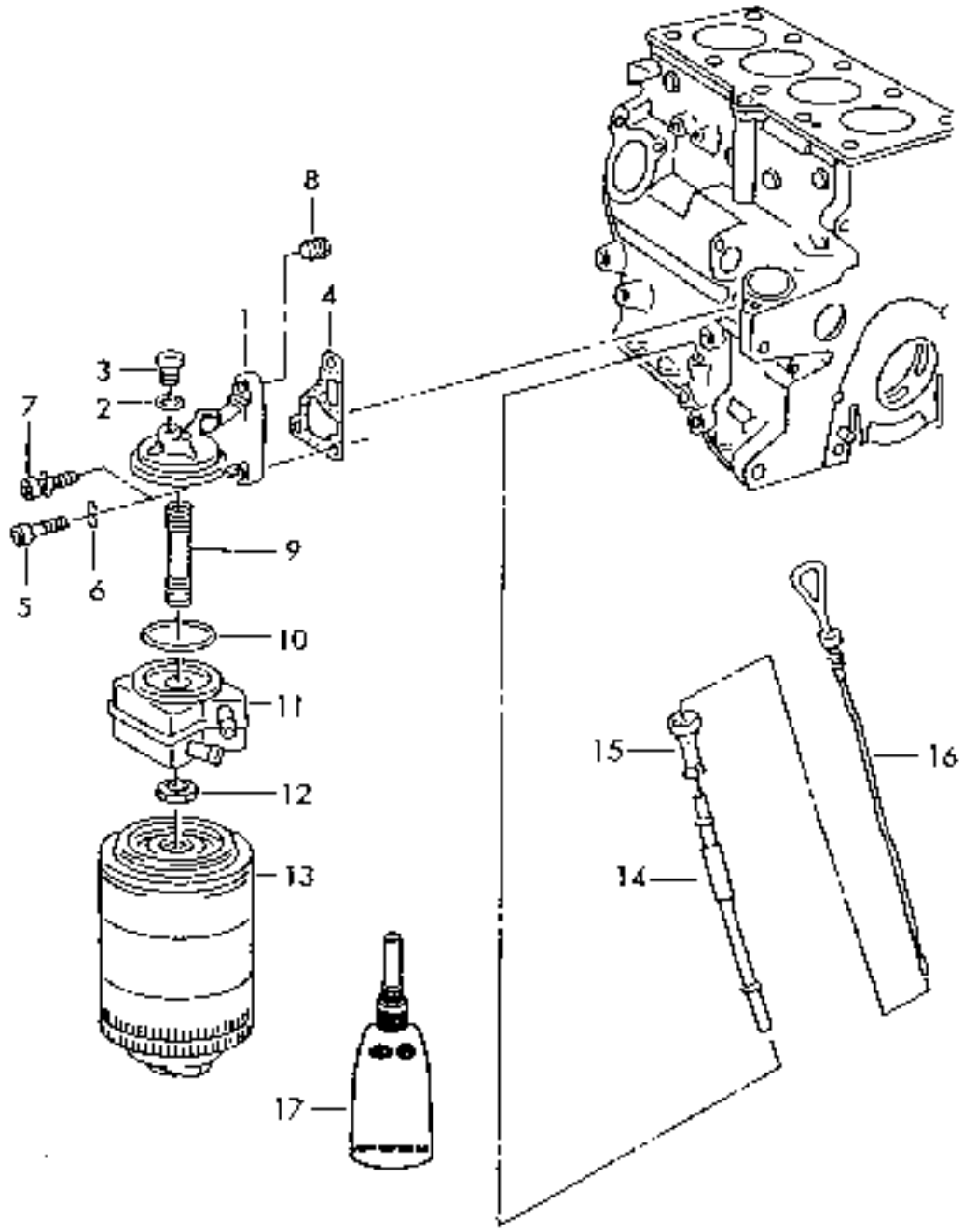

423115050.tif

https://truckmanualshub.com/

Oil Filter Oil filter bracket ADG

Pos.	Part-No.	I	Designation	Qantity	replaced by	Remarks
1	VW053115417A		Oil Filter Bracket	1		
2	VWN 0138115		Sealing Washer	3		
3	VWN 0160243		Sealing Plug	3		
4	VW028115441C		gasket	1		
5	VWN 90339605		Zylinderschraube	1		
6	VWN 01224110		Spring Washer	X		
7	VWN 0903151		Hexagon Head Bolt (Combi)	2		
8	VW028115436		Choke	1		
13	VW068115561B		Oil Filter	1		
14	VW028103634		Tube For Oil Dipstick	1		
15	VW028103663B		Guide FunnelOrange	1		
16	VW028115611C		Oil Dipstick	1		
17	VWAMV18810002		Sealing Paste	1		

1 = Packaged quantities 2 = Restricted availability 3 = Parts being phased out 4 = not available individually 5 = see separate list

https://truckmanualshub.com/

Oil Pump ADF

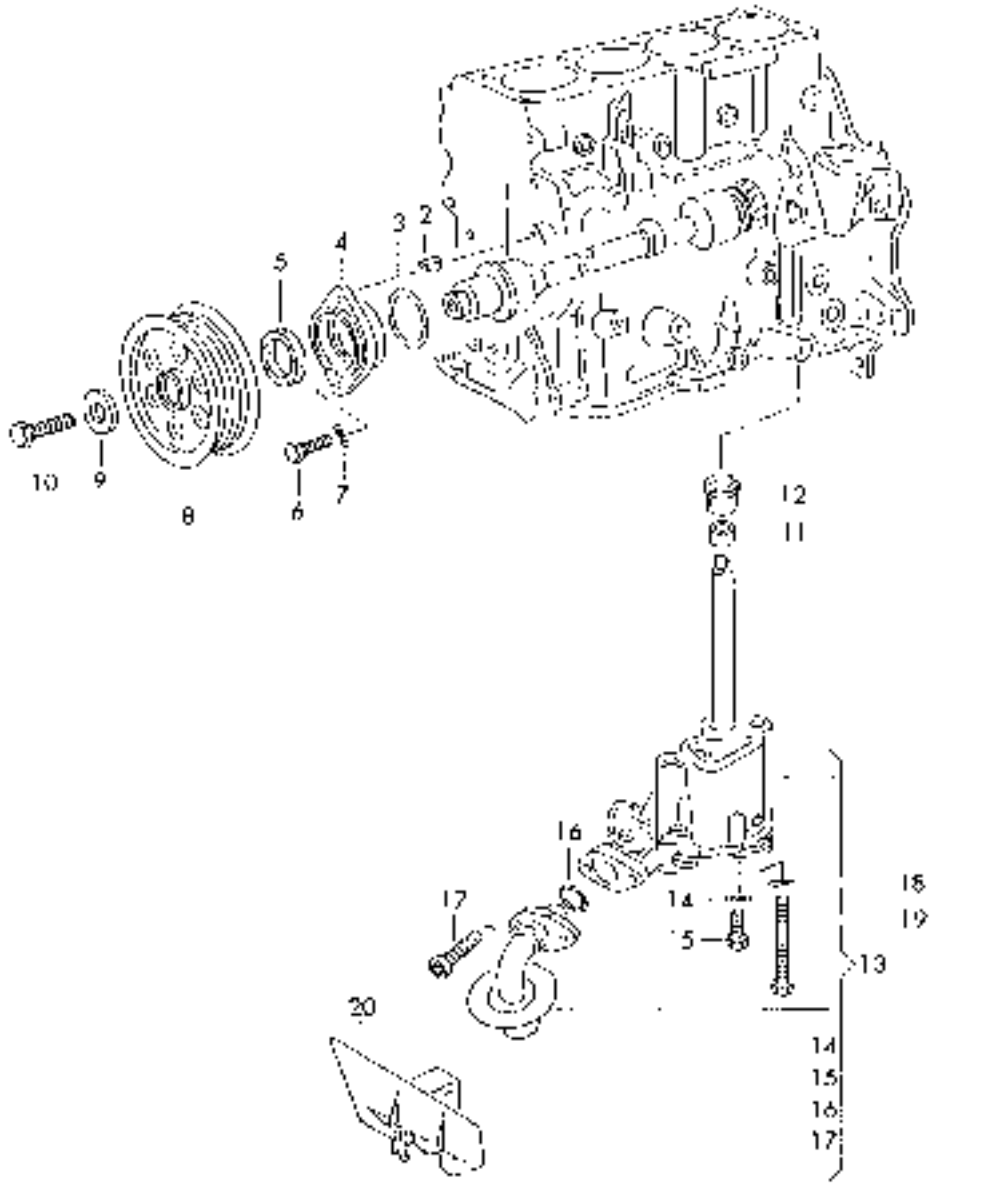

423115350.tif

https://truckmanualshub.com/

Oil Pump ADF

Pos.	Part-No.	I	Designation	Qantity	replaced by	Remarks
1	VW049115017B		Intermediate Shaft	1		
2	VWN 0127082		Woodruff Key	1		
3	VWN 90353501		Round Seal	1		
4	VW027115033		Guide RingMarked White	1		
5	VW068103085E		oil seal	1		
6	VWN 01024016		Hexagonal Head Bolt	2		
7	VWN 01224110		Spring Washer	2		
8	VW049109111C		Toothed Belt Pulley	1		
9	VW056109143		Washer	1		
10	VWN 0101371		Hexagonal Head Bolt	1		
11	VW053115167		Dowel Sleeve	1		
12	VW056103541		Bush	1		
13	VW027115105E		Oil Pump	1		
14	VWN 0122265		Spring Washer	2		
15	VWN 0102228		Hexagonal Head Bolt	2		
16	VWN 0282222		sealing washer	1		
17	VW026103637A		Cheese Head Bolt	2		
18	VWN 0122283		Spring Washer	2		
19	VWN 0103883		Hexagonal Head Bolt	2		

1 = Packaged quantities 2 = Restricted availability 3 = Parts being phased out 4 = not available individually 5 = see separate list

https://truckmanualshub.com/

Oil Filter Oil filter bracket ADF

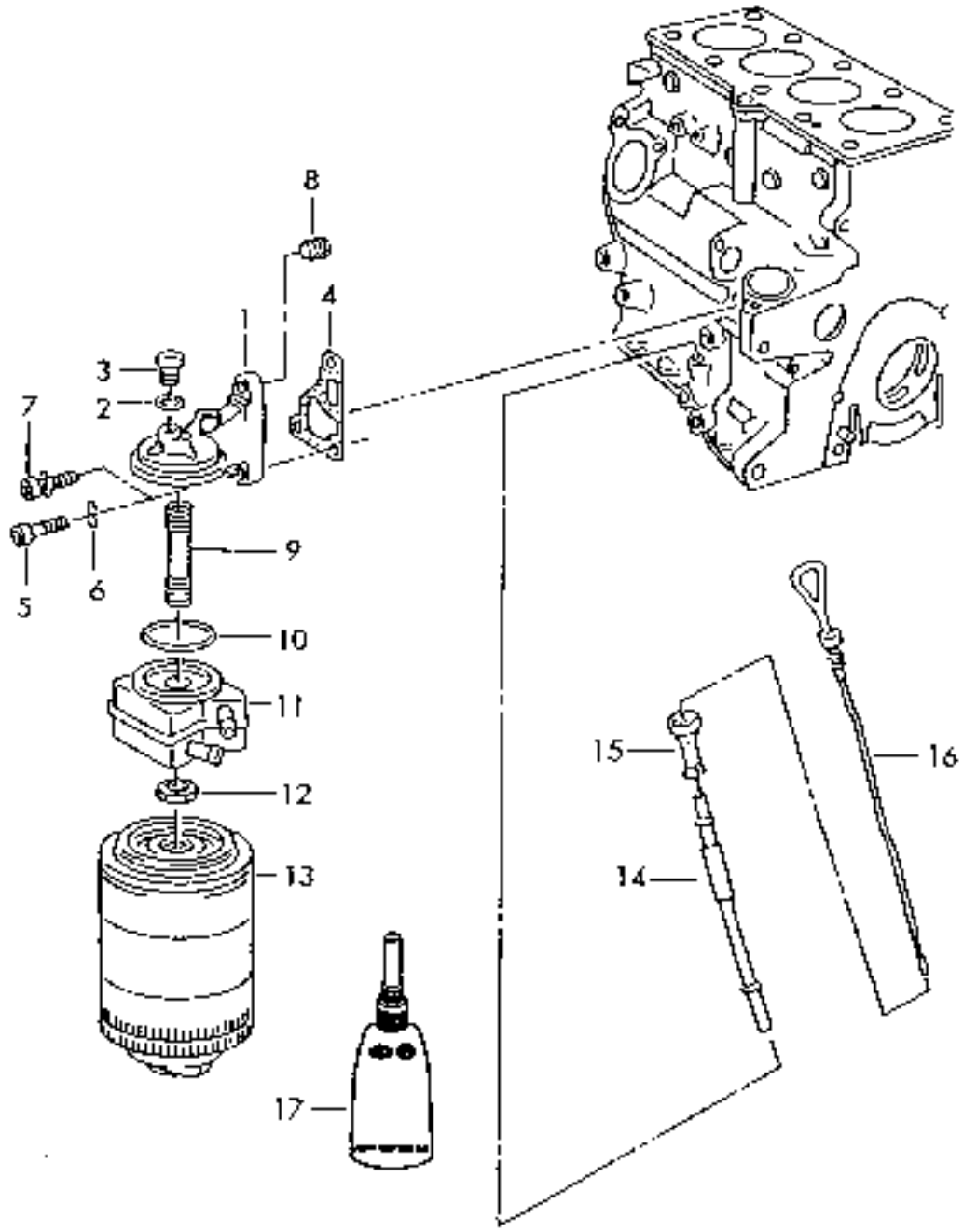

423115050.tif

https://truckmanualshub.com/

Oil Filter Oil filter bracket ADF

Pos.	Part-No.	I	Designation	Qantity	replaced by	Remarks
1	VW053115417A		Oil Filter Bracket	1		
2	VWN 0138115		Sealing Washer	3		
3	VWN 0160243		Sealing Plug	3		
4	VW028115441C		gasket	1		
5	VWN 90339605		Zylinderschraube	1		
5	VWN 90425401		Allen Key Head Bolt	2		
	-		(combi)			
6	VWN 01224110		Spring Washer	X		
8	VW077103175B		Valve	1		
9	VW059115721		Threaded Union	1		
13	VW06A115561B		oil filter	1		
14	VW049103634		Tube For Oil Dipstick	1		
15	VW050103663		guide funnel	1		
16	VW027115611C		Oil Dipstick	1		
17	VWAMV18810002		Sealing Paste	1		

1 = Packaged quantities 2 = Restricted availability 3 = Parts being phased out 4 = not available individually 5 = see separate list

https://truckmanualshub.com/

Oil Pump ADG

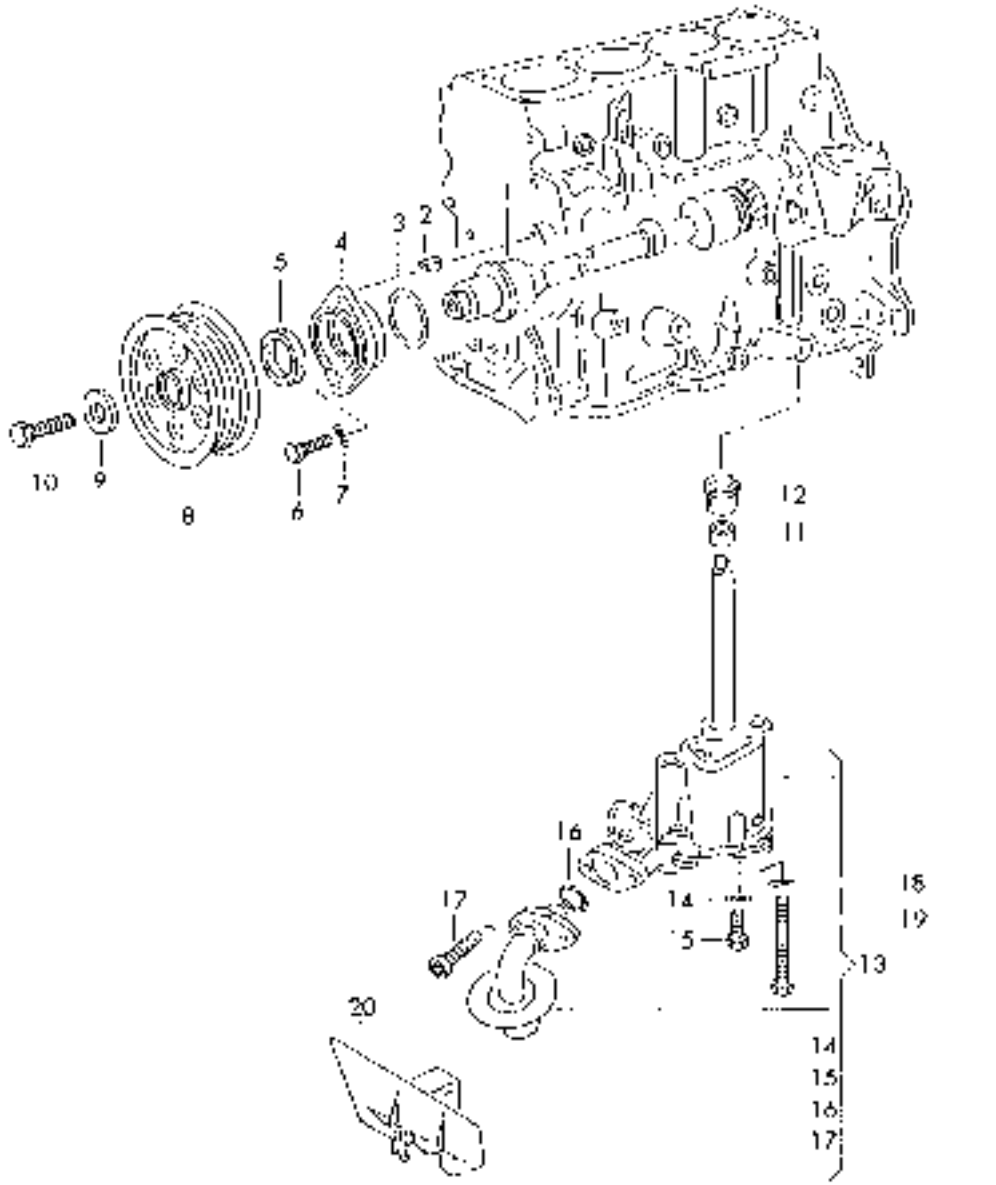

423115350.tif

https://truckmanualshub.com/

Oil Pump ADG

Pos.	Part-No.	I	Designation	Qantity	replaced by	Remarks
1	VW028115017E		shaft oil pump	1		
2	VWN 0127082		Woodruff Key	1		
3	VWN 90353501		Round Seal	1		
4	VW027115033		Guide RingMarked White	1		
5	VW068103085E		oil seal	1		
6	VWN 01024016		Hexagonal Head Bolt	2		
7	VWN 01224110		Spring Washer	2		
8	VW028115021B		pulley	1		
9	VW056109143		Washer	1		
10	VWN 0101371		Hexagonal Head Bolt	1		
11	VW053115167		Dowel Sleeve	1		
12	VW056103541		Bush	1		
13	VW028115105G		Oil Pump	1		
14	VWN 0122265		Spring Washer	2		
15	VWN 0102228		Hexagonal Head Bolt	2		
16	VWN 0282222		sealing washer	1		
17	VW026103637A		Cheese Head Bolt	2		
18	VWN 0122283		Spring Washer	2		
19	VWN 0103883		Hexagonal Head Bolt	2		
20	VW055115221B		Baffle	1		

1 = Packaged quantities 2 = Restricted availability 3 = Parts being phased out 4 = not available individually 5 = see separate list

https://truckmanualshub.com/

Water Pump ADG

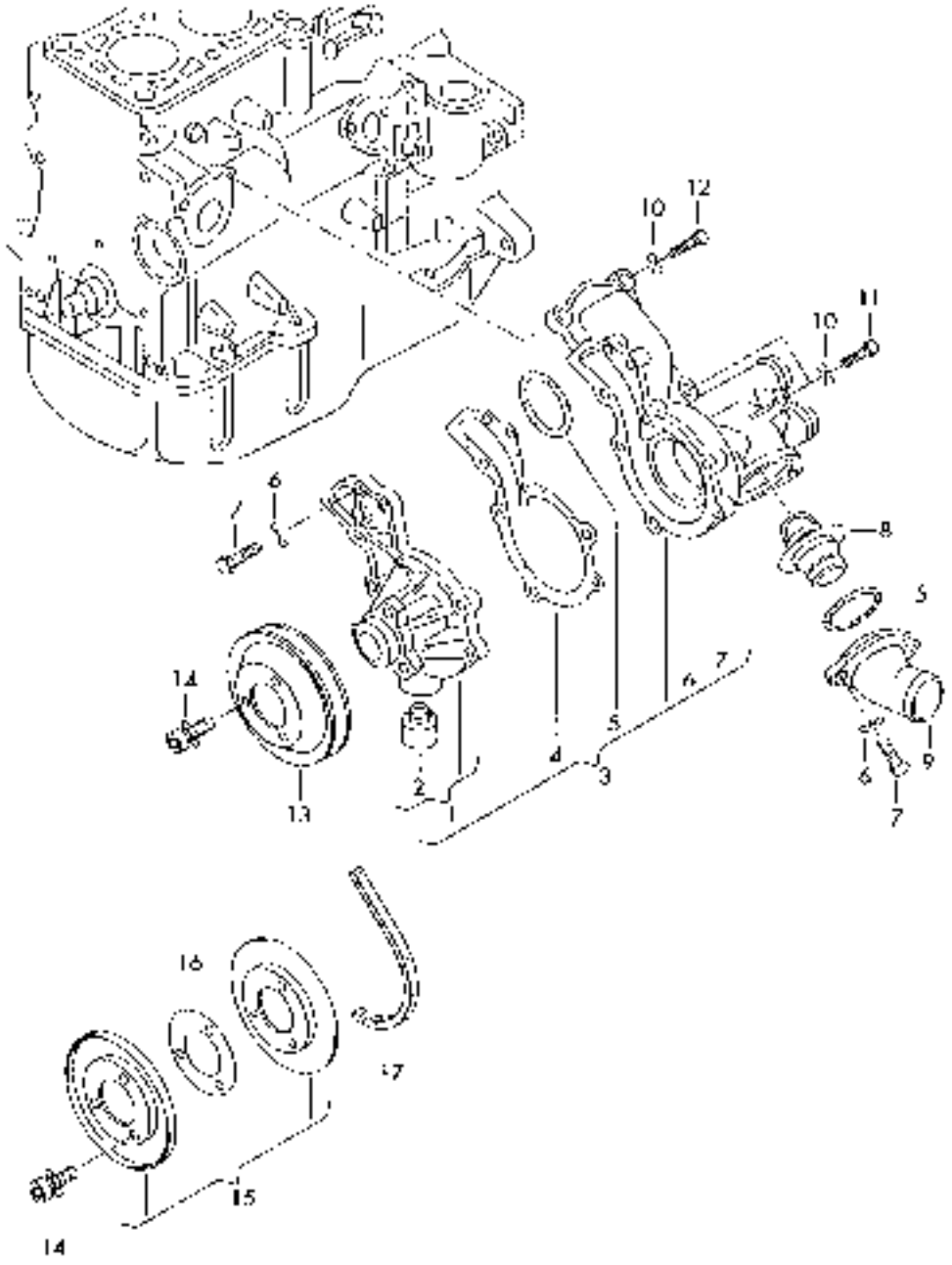

423121050.tif

https://truckmanualshub.com/

Water Pump ADG

Pos.	Part-No.	I	Designation	Qantity	replaced by	Remarks
1	VW037121005C		Housing With Impeller	1		
2	VW049121099		Plug	1		
3	VW037121010C		water pump assembly	1		
	-		Without Pulley, Thermostat And			
	-		Adapter			
3	VW037121010CX		Water Pump With Sealing Washer	1		
	-		Without Pulley, Thermostat And			
	-		Adapter			
4	VW026121041P		Gasket	1		
5	VW038121119B		washer	2		
6	VWN 0122265		Spring Washer	10		
7	VWN 0102228		Hexagonal Head Bolt	10		
8	VW068121113A		thermostat	1		
9	VW055121121F		Connecting Socket	1		
10	VWN 01224110		Spring Washer	X		
11	VWN 0103506		Hexagonal Head Bolt	1		
11	VWN 01036113		Hexagonal Head Bolt	1		
12	VWN 01024425		Hexagonal Head Bolt	2		
12	VWN 0103516		Hexagonal Head Bolt	2		
13	VW068121031K		V-Belt Pulley	1		
13	VW028121031K		Pulley	1		
13	VW028105253A		V-Belt Pulley	1		
14	VWN 90308607		Hexagon Socket Head Bolt With	3		
	-		Collar			
	-		Also Use:			N 012 241 10
14	VWN 90221803		Allen Key Head Bolt	3		
	-		(combi)			

1 = Packaged quantities 2 = Restricted availability 3 = Parts being phased out 4 = not available individually 5 = see separate list

https://truckmanualshub.com/

Water Pump ADG

Pos.	Part-No.	I	Designation	Qantity	replaced by	Remarks
15	**VW068121029A**		**pulley**	**1**		
16	**VW068121185B**		**Washer**	**6**		
17	**VW068121039G**		**V-Belt**	**1**		

1 = Packaged quantities **2 = Restricted availability** **3 = Parts being phased out** **4 = not available individually** **5 = see separate list**

https://truckmanualshub.com/

https://truckmanualshub.com/

Water Pump ADF

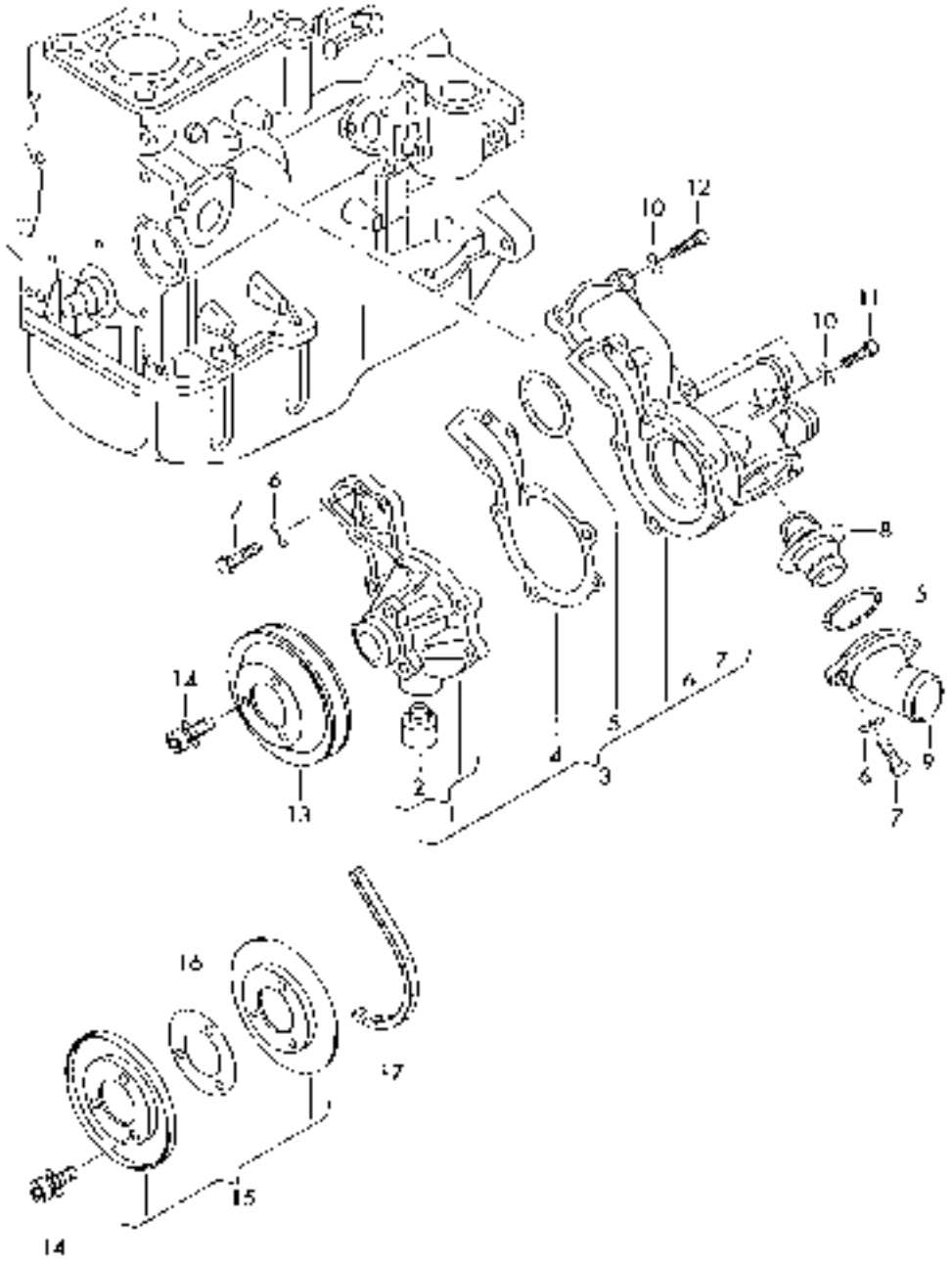

423121050.tif

https://truckmanualshub.com/

Water Pump ADF

Pos.	Part-No.	I	Designation	Qantity	replaced by	Remarks
1	VW037121005C		Housing With Impeller	1		
2	VW049121099		Plug	1		
3	VW037121010C		water pump assembly	1		
	-		Without Pulley, Thermostat And			
	-		Adapter			
3	VW037121010BX		Water Pump With Sealing Washer	1		
	-		Without Pulley, Thermostat And			
	-		Adapter			
4	VW026121041P		Gasket	1		
5	VW038121119B		washer	2		
6	VWN 0122265		Spring Washer	10		
7	VWN 0102228		Hexagonal Head Bolt	10		
8	VW068121113A		thermostat	1		
9	VW055121121F		Connecting Socket	1		
10	VWN 01224110		Spring Washer	4		
11	VWN 0402622		Hexagonal Head Bolt	2		
12	VWN 01024425		Hexagonal Head Bolt	2		
13	VW026121031D		V-Belt Pulley	1		
14	VWN 90308607		Hexagon Socket Head Bolt With	3		
	-		Collar			
	-		Also Use:			N 012 241 10
-	VWN 01224110		Spring Washer	X		
15	VW068121029A		pulley	1		
16	VW068121185B		Washer	6		
17	VW050903137		v belt	1		

1 = Packaged quantities 2 = Restricted availability 3 = Parts being phased out 4 = not available individually 5 = see separate list

https://truckmanualshub.com/

Flange Water Hoses ADG

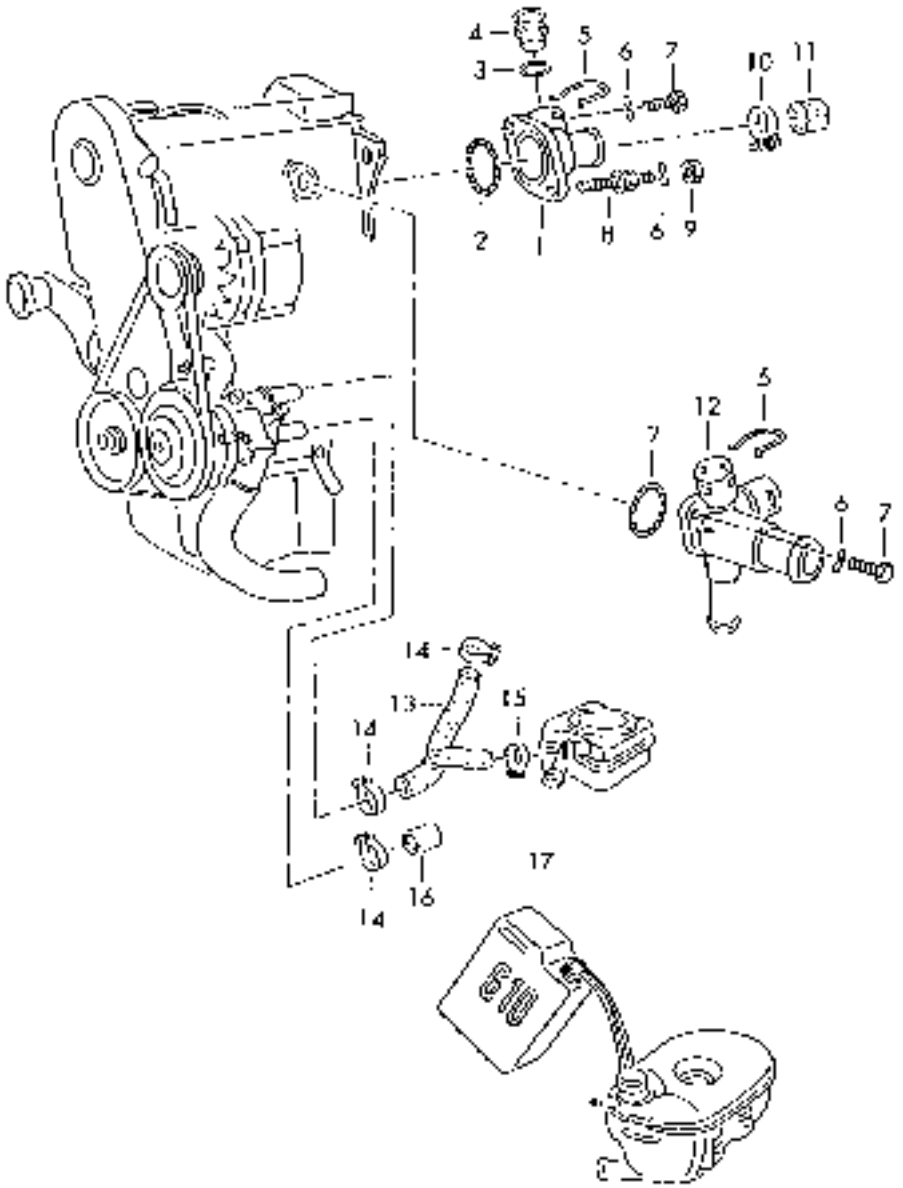

423121350.tif

https://truckmanualshub.com/

Flange Water Hoses ADG

Pos.	Part-No.	I	Designation	Qantity	replaced by	Remarks
1	VW068121144		Flange With Sealing Ring	1		
1	VW044121144C		Flange With Sealing Ring	1		
	-		For Models With Supplementary			
	-		Heater			
2	VW037121687		sealing washer	2		
3	VWN 90316802		seal	1		
4	VW357121140		Plug	1		
5	VW032121142		retaining spring	2		
6	VWN 0122265		Spring Washer	X		
7	VWN 01021723		Hexagonal Head Bolt	2		
8	VWN 91148001		Double Stud With Hexagon Drive	1		
9	VWN 90175205		Hexagon Nut, Shouldered	1		
10	VWN 10258101		Pipe Clip	1		
11	VW036121324B		cap	1		
12	VW068121132		flange with sealing ring	1		
13	VW028121053N		Water Hose	1		
14	VWN 0164041		Spring-Type Clip	2		
15	VWN 0164021		Spring-Type Clip	1		
17	VWG 012A8FM1		Kühlmittelzusatz	X		1.5Ltr.

1 = Packaged quantities 2 = Restricted availability 3 = Parts being phased out 4 = not available individually 5 = see separate list

https://truckmanualshub.com/

Water Hoses And Pipes Radiator Flange ADF

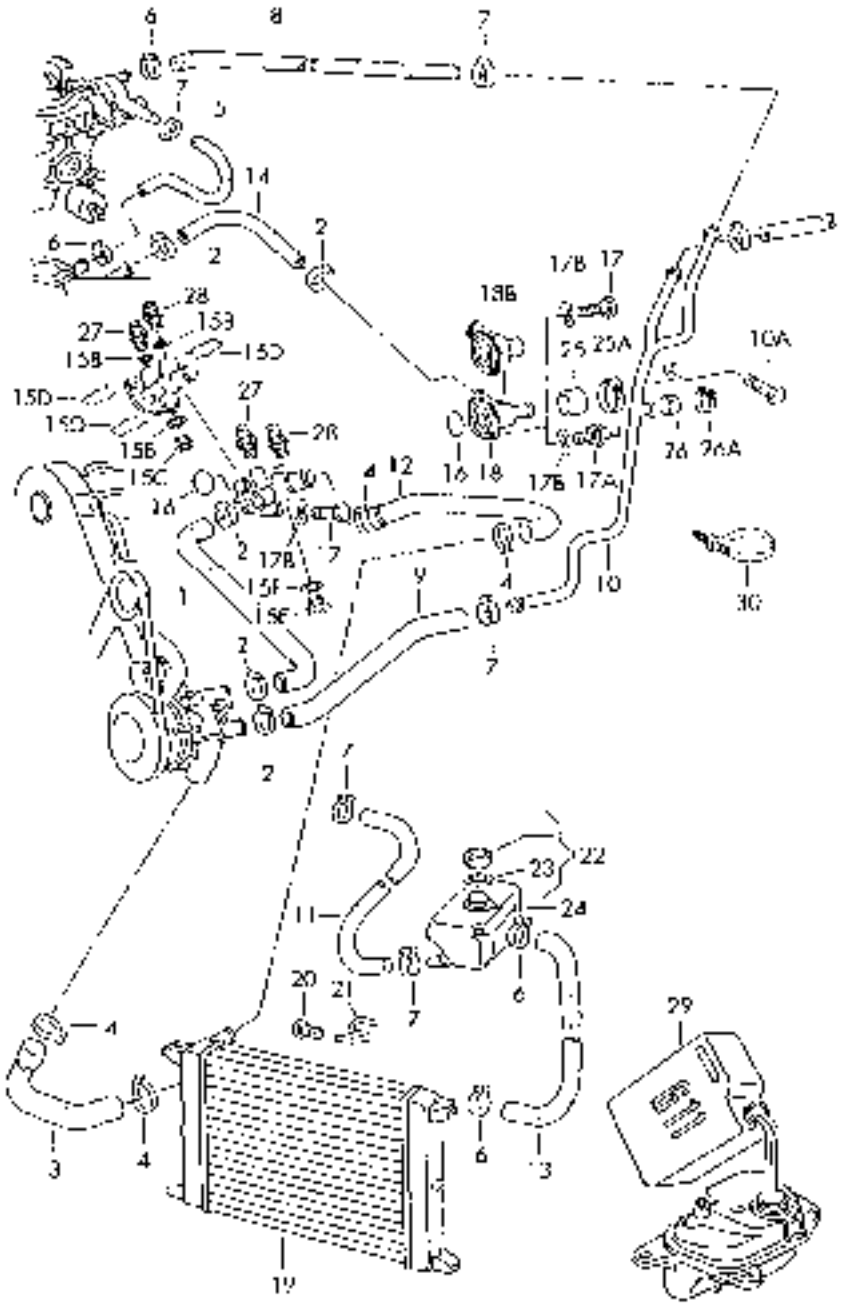

421121450.tif

https://truckmanualshub.com/

Water Hoses And Pipes Radiator Flange ADF

Pos.	Part-No.	I	Designation	Qantity	replaced by	Remarks
4	VWN 0245077		Pipe Clip	X		
15E	VWN 0160241		Plug	X		
15F	VWN 0138115		Sealing Washer	X		
16	VW037121687		sealing washer	2		
17	VWN 90280901		Hexagon Head Bolt (Combi)	2		
17A	VW027121631A		Double Hex. Hd. Bolt	2		
17B	VWN 0122265		Spring Washer	2		
18	VW026121144F		Flange With Sealing Ring	1		
25	VW036121324B		cap	1		
25A	VWN 0245077		Pipe Clip	1		
27	VW251919369B		Thermal Switch	1		
	-		For Intake Manifold Heating			2 Pin Red
28	VW068919369		temperature switch	1		
29	VWG 012A8FM1		Kühlmittelzusatz	X		1.5Ltr.
29	VWG 012A8FM8		Coolant Additive, Plus	X		60Ltr.
30	VWN 0209022		Cable Tie	X		

1 = Packaged quantities 2 = Restricted availability 3 = Parts being phased out 4 = not available individually 5 = see separate list

https://truckmanualshub.com/

Water Hoses And Pipes Radiator Flange ADF

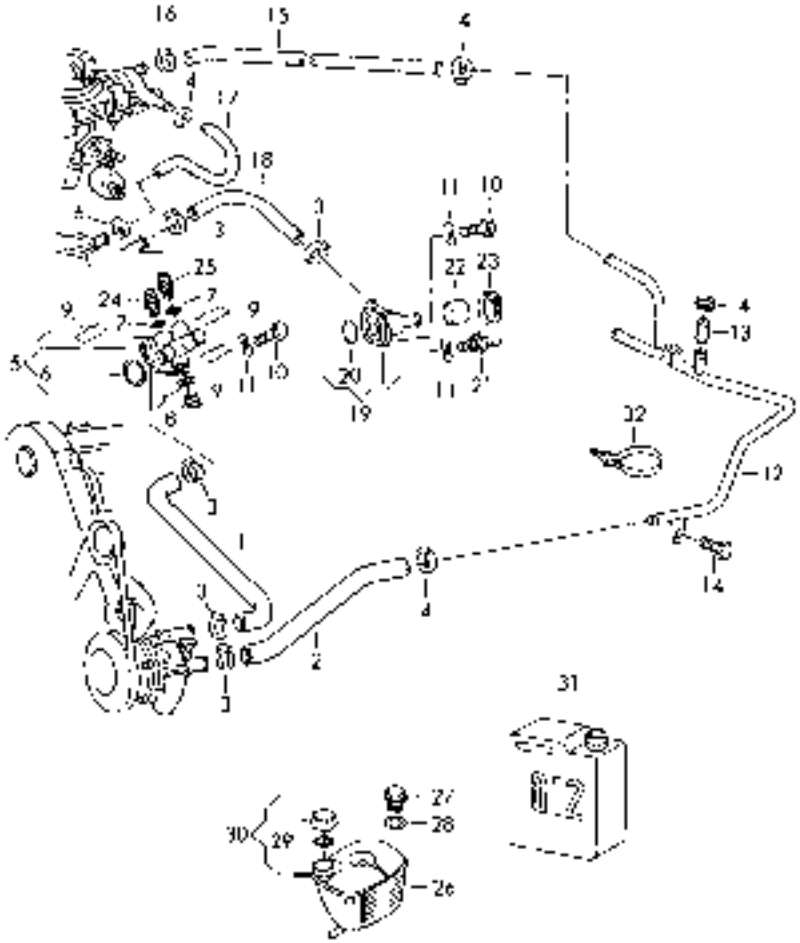

421121510.tif

https://truckmanualshub.com/

Water Hoses And Pipes Radiator Flange ADF

Pos.	Part-No.	I	Designation	Qantity	replaced by	Remarks
1	VW026121053G		Water Hose	1		
5	VW037121132B		Flange With Sealing Ring	1		
	-		Also Use:			357 121 140 032 121 142 N 903 168 02
6	VW037121687		sealing washer	2		
7	VWN 90316802		seal	3		
8	VW357121140		Plug	1		
8	VW357121140		Plug	2		
9	VW032121142		retaining spring	X		
10	VWN 90280901		Hexagon Head Bolt (Combi)	2		
11	VWN 0122265		Spring Washer	2		
19	VW026121144F		Flange With Sealing Ring	1		
20	VW171121327		Seal	1		
21	VWN 91148001		Double Stud With Hexagon Drive	2		
22	VW036121324B		cap	1		
23	VWN 0245077		Pipe Clip	1		
25	VW068919369		temperature switch	1		
25	VW251919501D		switch temperature	1		2 Pin
	-		For Coolant Temperature			
	-		Gauge			Green/Black
	-		Also Use:			N 903 168 02

1 = Packaged quantities 2 = Restricted availability 3 = Parts being phased out 4 = not available individually 5 = see separate list

https://truckmanualshub.com/

Fuel Pump ADF

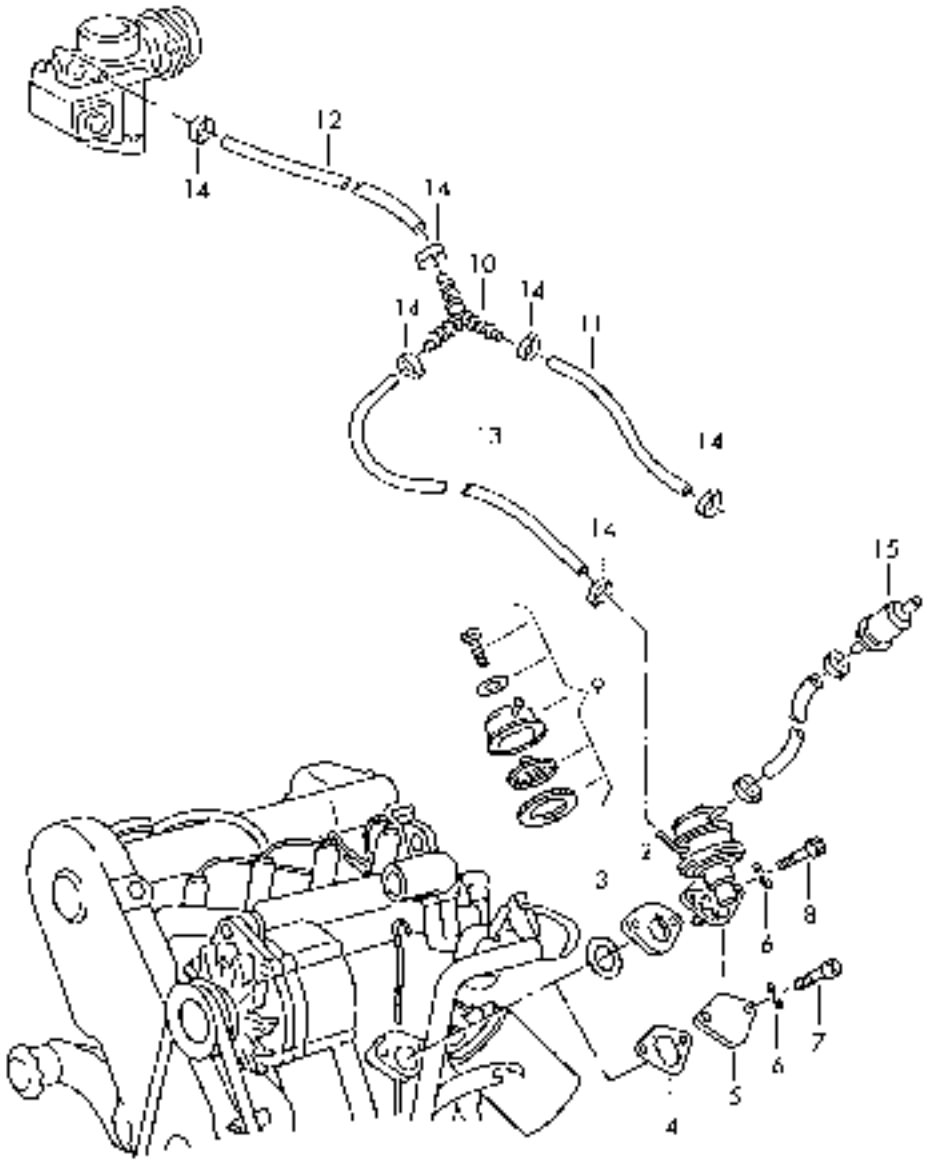

421127000.tif

https://truckmanualshub.com/

Fuel Pump ADF

Pos.	Part-No.	I	Designation	Qantity	replaced by	Remarks
1	VW026127025A		Fuel Pump	1		
2	VW035127301C		Intermediate Flange	1		
3	VW049127311A		Round Seal	1		
4	VW028127311A		Gasket(asbestos Free)	1		
5	VW063103113		Locking Cover	1		
6	VWN 01224110		Spring Washer	2		
7	VWN 10644901		Socket head bolt with inner	2		
	-		multipoint head			
8	VWN 90355903		Allen Key Head Bolt	1		
	-		(combi)			
9	VW111198555C		Set Of Gaskets ForFuel Pump	1		
-	VWN 10120701		Hose In Coils Of 5M	*		
	-		'order Unit 5'			
14	VW111127537A		Terminal	X		
-	VW026133827A		Holder	1		

1 = Packaged quantities 2 = Restricted availability 3 = Parts being phased out 4 = not available individually 5 = see separate list

https://truckmanualshub.com/

Intake Connection ADG

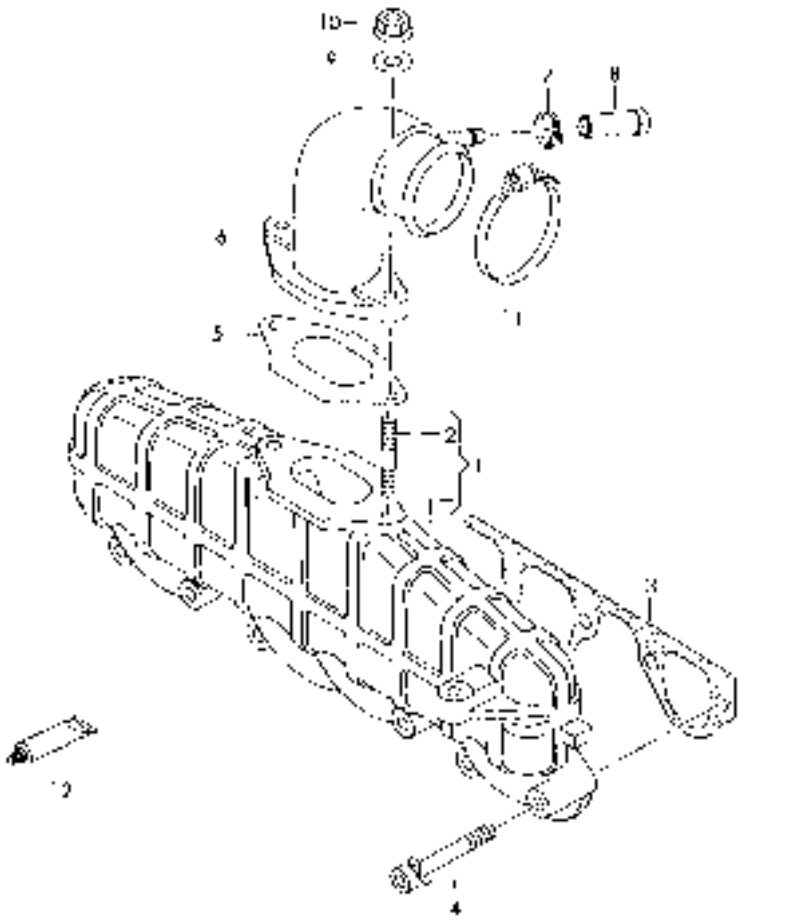

425129050.tif

https://truckmanualshub.com/

Intake Connection ADG

Pos.	Part-No.	I	Designation	Qantity	replaced by	Remarks
1	VW028129711C		Intake Connection	1		
2	VWN 90175601		Stud	2		
3	VW028129717D		gasket	1		
4	VWN 0147154		Allen Key Head	6		
	-		Bolt			
	-		See Drawing:			N044753
5	VW068129638A		Seal	1		
6	VW068129635		Connection Piece	1		
	-		Also Use:			028 130 229 A N 900 455 01
7	VWN 90045502		Pipe Clip	1		
8	VW028130229A		Cap	1		
9	VWN 01152527		Washer	1		
10	VWN 0221464		Hexagon Nut, Self-Locking	2		
11	VWN 0245044		Pipe Clip	1		
12	VWAMV18800102		Sealing Paste	X		

1 = Packaged quantities 2 = Restricted availability 3 = Parts being phased out 4 = not available individually 5 = see separate list

https://truckmanualshub.com/

Intake System ADF

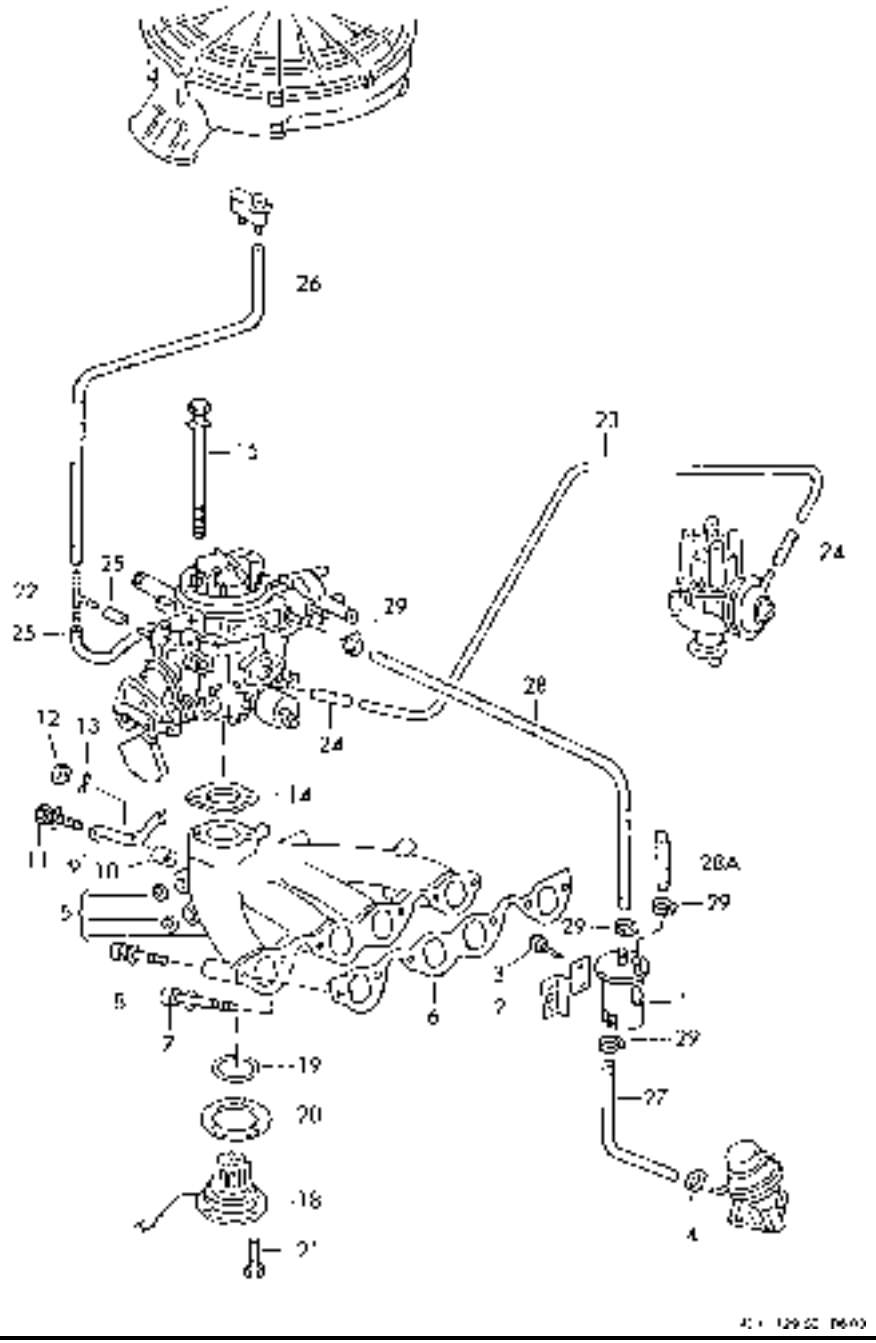

421129500.tif

https://truckmanualshub.com/

Intake System ADF

Pos.	Part-No.	I	Designation	Qantity	replaced by	Remarks
4	VW111127537A		Terminal	1		
8	VWN 0147513		Allen Key Head	4		
	-		Bolt			
	-		Also Use:			N 011 525 27
10	-		No Longer Available			
-	VWN 90179102		Washer	2		
-	VWN 90107604		Washer	1		
-	VWN 01224110		Spring Washer	X		
-	VWN 0201391		Tube In Coils Of 5M	*		
	-		'order Unit 5'			
23	-		Shorten To:	1		600MM
-	VWN 02035327		Hose In Coils Of 5M	*		
	-		'order Unit 5'			
-	VWN 10120701		Hose In Coils Of 5M	*		
	-		'order Unit 5'			

1 = Packaged quantities 2 = Restricted availability 3 = Parts being phased out 4 = not available individually 5 = see separate list

https://truckmanualshub.com/

Intake Connection ADF

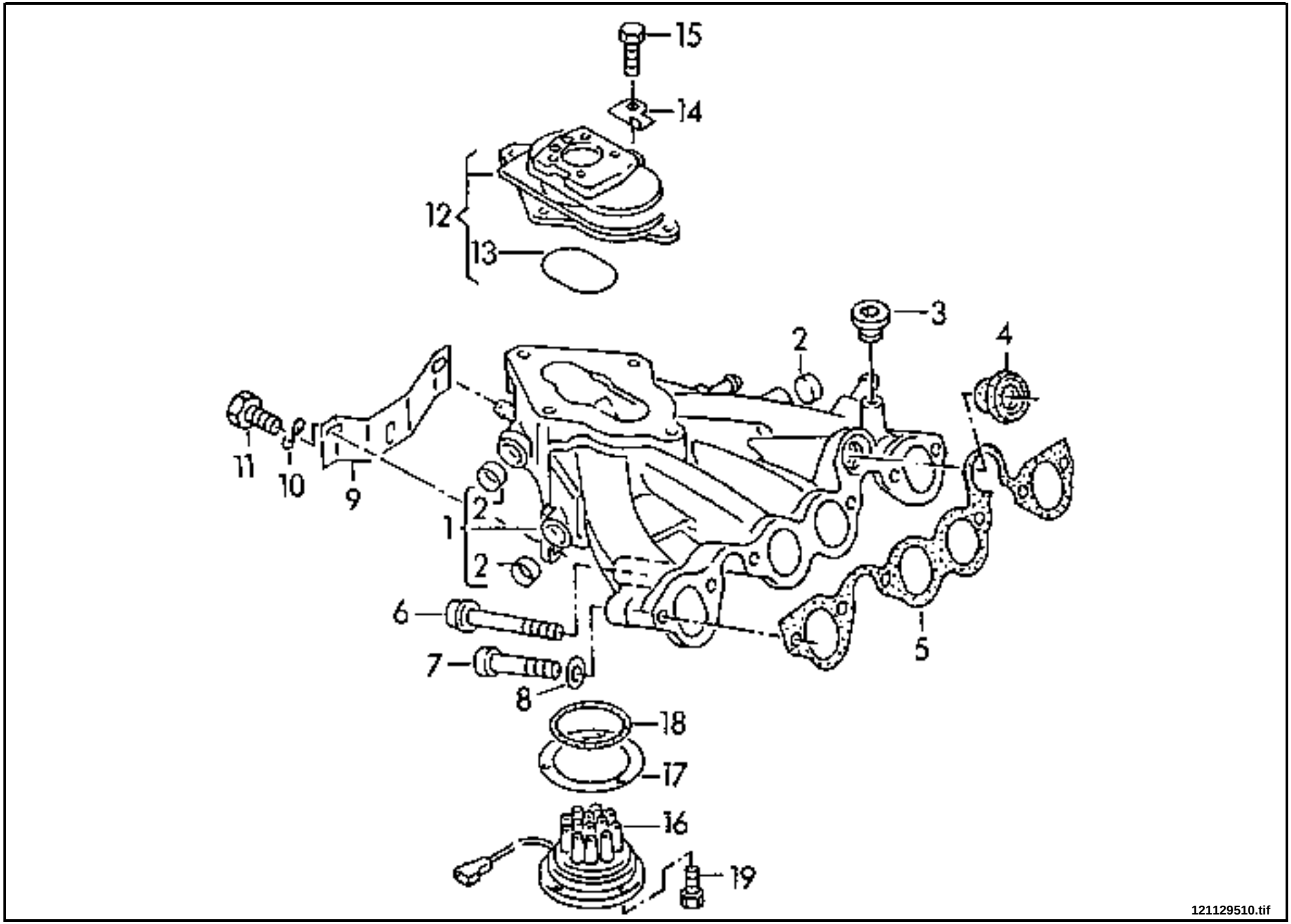

https://truckmanualshub.com/

Intake Connection ADF

Pos.	Part-No.	I	Designation	Qantity	replaced by	Remarks
1	VW051129711D		Intake Connection	1		
2	VWN 0119043		Locking Cover	3		
3	VWN 0160243		Sealing Plug	X		
4	VW035121171C		Seal	1		
5	VW048129717D		Gasket	1		
6	VWN 0447141		Allen Key Head	2		
	-		inner hex round head			
7	VWN 0147513		Allen Key Head	4		
	-		Bolt			
8	VWN 01152527		Washer	4		
16	VW026129893		Pre-Heater	1		
17	VWN 0283403		Seal	1		
18	VW026129949		Gasket	1		
19	VWN 01021527		Hexagonal Head Bolt	3		

1 = Packaged quantities 2 = Restricted availability 3 = Parts being phased out 4 = not available individually 5 = see separate list

https://truckmanualshub.com/

Injection Pump ADG

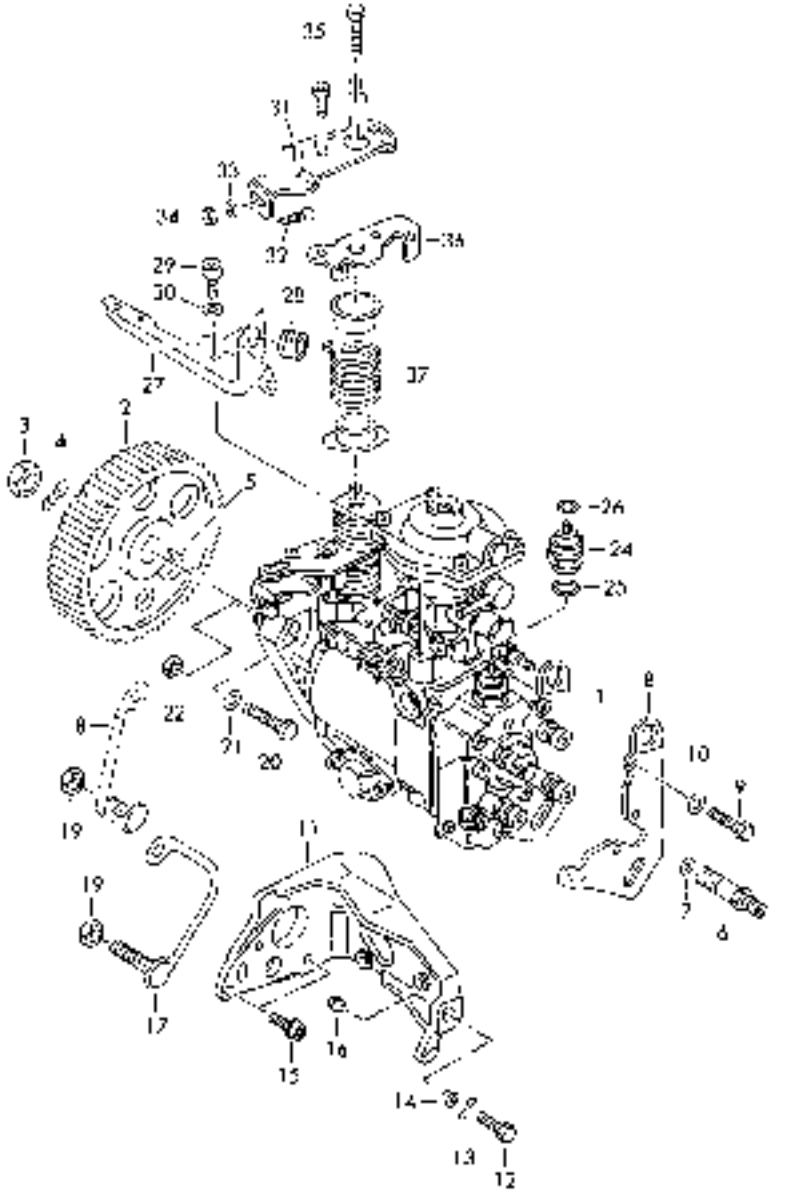

425130050.tif

https://truckmanualshub.com/

Injection Pump ADG

Pos.	Part-No.	I	Designation	Qantity	replaced by	Remarks
1	VW028130082B		injection pump	1		
2	VW028130111C		Toothed Belt Pulley	1		
3	VWN 0110304		Hexagonal Nut	1		
4	VWN 0122321		Spring Washer	1		
5	VWN 0127061		Woodruff Key	1		
6	VW028130795		Union	4		
7	VW068130787A		Sealing Washer	4		
8	VW028130149		Support	1		
9	VWN 0147821		Allen Key Head	2		
	-		Bolt			
10	VWN 0115477		Washer	2		
11	VW028130147A		Console	1		
12	VWN 0102478		Hexagonal Head Bolt	4		
13	VWN 01224110		Spring Washer	4		
14	VW068130199		Bush	1		
15	VWN 10226004		Hexagon Socket Head Bolt With	3		
	-		Collar			
16	VW068130197		Tapered Nut	1		
17	VW068130174		Arm	1		
18	VW068130173B		Arm	1		
19	VWN 0111849		Hexagon Nut, Self-Locking	2		
20	VWN 0102695		Hexagonal Head Bolt	1		
22	VWN 0111849		Hexagon Nut, Self-Locking	2		
24	VW028130135B		fuel cut-off switch 12V	1		
25	VW068130139		Seal For	1		
	-		Fuel Cut-Off Solenoid			
26	VWN 0221544		Hexagon Nut, Self-Locking	1		

1 = Packaged quantities 2 = Restricted availability 3 = Parts being phased out 4 = not available individually 5 = see separate list

https://truckmanualshub.com/

Injection Pump ADG

Pos.	Part-No.	I	Designation	Qantity	replaced by	Remarks
27	VW028130147D		Carrier Panel	1		
28	VW171711512		Bush	1		
29	VWN 01021533		Hexagonal Head Bolt	2		
31	VW068130331Q		Retaining Lever	1		
32	VWN 0155151		Ball Pin	1		
33	VWN 01152321		Washer	1		
34	VWN 10017304		Hexagon Nut, Shouldered	1		
35	VWN 01021612		Hexagonal Head Bolt	1		
36	VW068130331S		Retaining Lever	1		
37	VW068130735N		Leg Spring	1		
37	VW068130735H		Leg Spring	1		

1 = Packaged quantities 2 = Restricted availability 3 = Parts being phased out 4 = not available individually 5 = see separate list

https://truckmanualshub.com/

https://truckmanualshub.com/

Set Of Gaskets For Injection Pump ADG

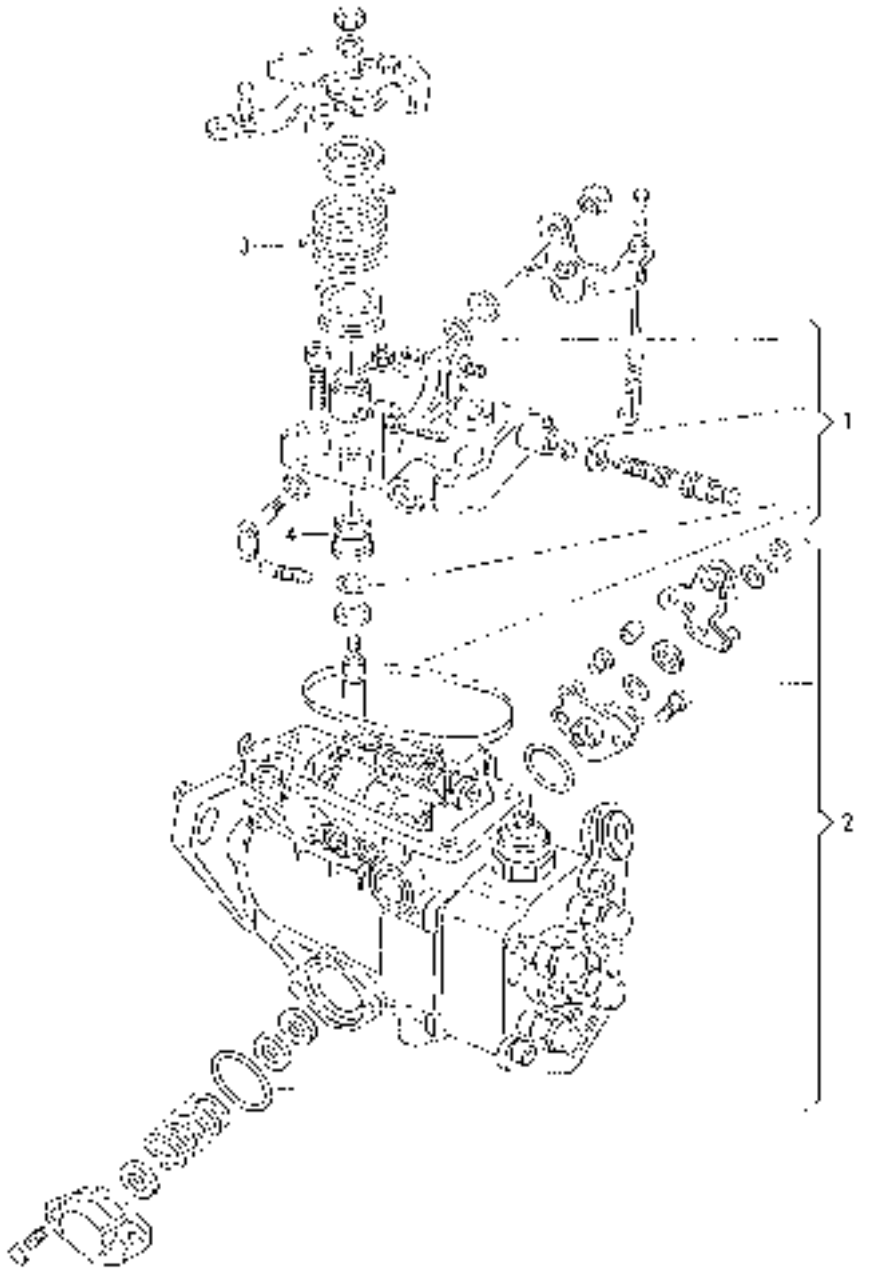

423130250.tif

https://truckmanualshub.com/

Set Of Gaskets For Injection Pump ADG

Pos.	Part-No.	I	Designation	Qantity	replaced by	Remarks
1	VW068198051A		Set Of Gaskets ForInjection Pump	1		
2	VW068198052A		Set Of Seals	1		
3	VW068130735N		Leg Spring	1		
4	VW068130718		Bush	1		
4	VW068130718F		Bush	1		
4	VW068130718H		Bush	1		
4	VW068130718J		Bush	1		

1 = Packaged quantities 2 = Restricted availability 3 = Parts being phased out 4 = not available individually 5 = see separate list

https://truckmanualshub.com/

Injector Pressure Pipes ADG

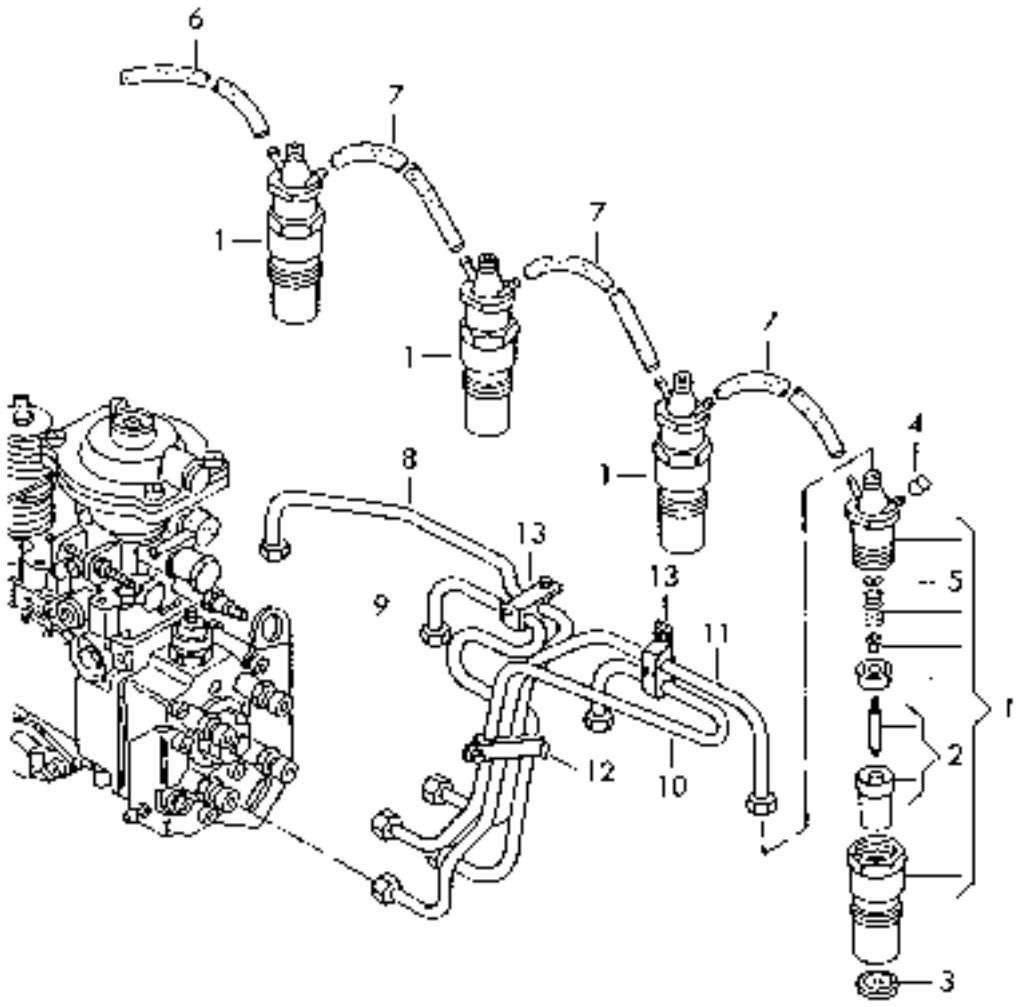

423130400.tif

https://truckmanualshub.com/

Injector Pressure Pipes ADG

Pos.	Part-No.	I	Designation	Qantity	replaced by	Remarks
1	VW068130202AX		Injector Complete	4		
3	VW068130219		Sealing Washer	4		
4	VW028130229A		Cap	1		
5	VW068130251		Adjusting Washer	X		
5	VW068130252		Adjusting Washer	X		
5	VW068130253		Adjusting Washer	X		
5	VW068130254		Adjusting Washer	X		
5	VW068130255		Adjusting Washer	X		
5	VW068130256		Adjusting Washer	X		
5	VW068130257		Adjusting Washer	X		
5	VW068130258		Adjusting Washer	X		
5	VW068130259		Adjusting Washer	X		
5	VW068130260		Adjusting Washer	X		
5	VW068130261		Adjusting Washer	X		
5	VW068130262		Adjusting Washer	X		
5	VW068130263		Adjusting Washer	X		
5	VW068130264		Adjusting Washer	X		
5	VW068130265		Adjusting Washer	X		
5	VW068130266		Adjusting Washer	X		
5	VW068130267		Adjusting Washer	X		
5	VW068130268		Adjusting Washer	X		
5	VW068130269		Adjusting Washer	X		
5	VW068130270		Adjusting Washer	X		
-	VWN 02035333		Hose In Coils Of 5M	*		
	-		'order Unit 5'			
	-		Use If Required:			N 900 455 01
-	VWN 90045501		clip	X		

1 = Packaged quantities 2 = Restricted availability 3 = Parts being phased out 4 = not available individually 5 = see separate list

https://truckmanualshub.com/

Injector Pressure Pipes ADG

Pos.	Part-No.	I	Designation	Qantity	replaced by	Remarks
8	VW028130301Q		Pressure Pipe	1		Cylinder 1
9	VW028130302Q		Pressure Pipe	1		Cylinder 2
10	VW028130303J		Pressure Pipe	1		Cylinder 3
11	VW028130304H		Pressure Pipe	1		Cylinder 4
12	VW028130431		Pipe Clip	2		
13	VW028130431		Pipe Clip	2		

1 = Packaged quantities 2 = Restricted availability 3 = Parts being phased out 4 = not available individually 5 = see separate list

https://truckmanualshub.com/

https://truckmanualshub.com/

Alternator And Single Parts ADG

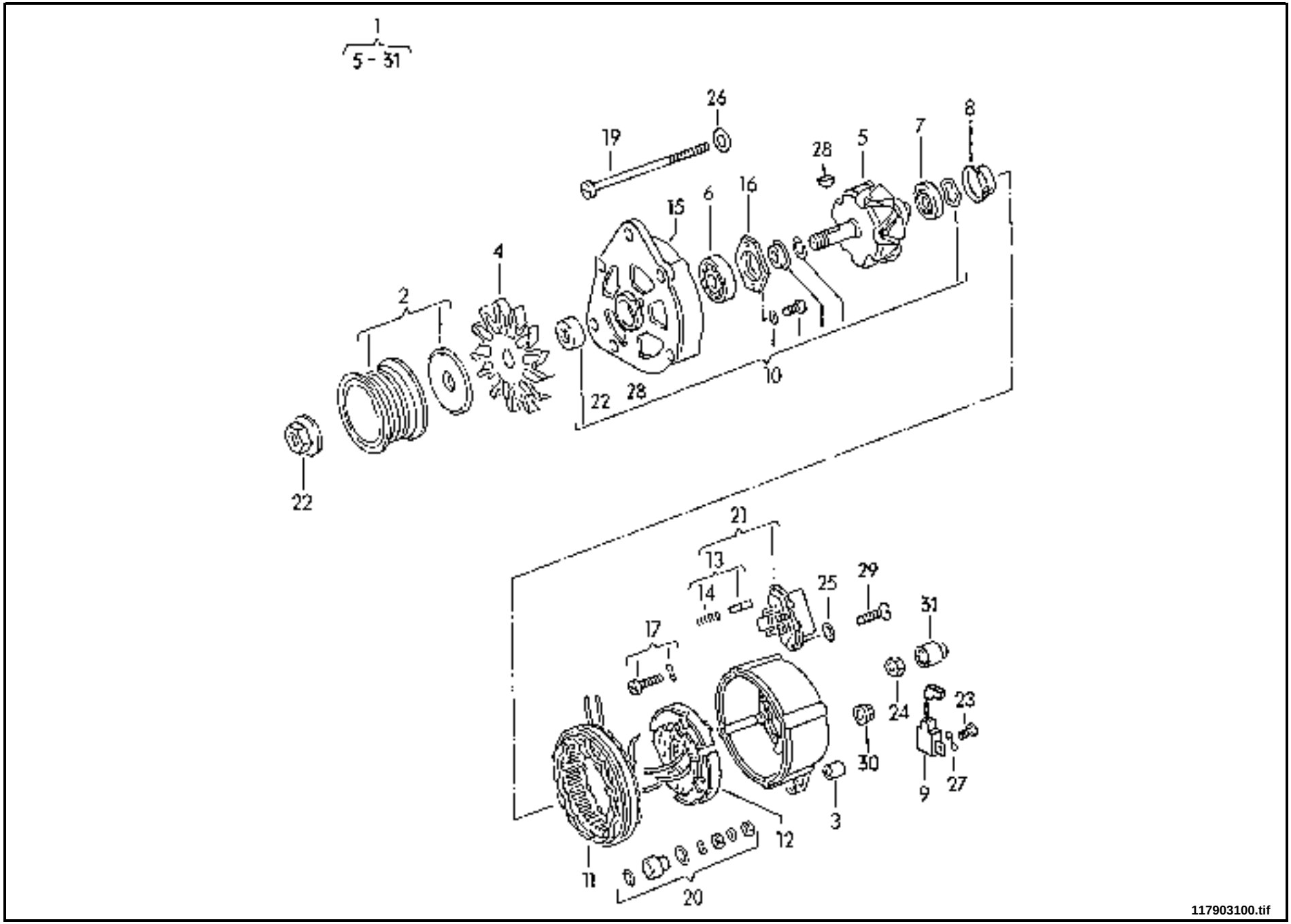

https://truckmanualshub.com/

Alternator And Single Parts ADG

Pos.	Part-No.	I	Designation	Qantity	replaced by	Remarks
1	VW068903017NX		Alternator	1		ADG
						ADG
						ADG
1	VW068903017NX		Alternator	1		ADG
						ADG
						ADG
						ADG
						ADG
						ADG
1	VW068903017TX		Alternator	1		ADG
						ADG
						ADG
2	VW049903119L		pulley	1		
	-		For Alternator:			3
2	VW028903119F		Ribbed Belt Pulley	1		
	-		For Alternator:			4
-	VW028903193E		Protective Cap	1		
	-		For Alternator:			4
4	VW068903171		Fan Wheel	1		
	-		For Alternator:			3
5	VW068903213F		Claw-Pole Rotor	1		
	-		For Alternator:			1
5	VW069903213E		Claw-Pole Rotor	1		
	-		For Alternator:			2,3
6	VW021903221E		Grooved Ball Bearing	1		
	-		For Alternator:			1,2,3
7	VW054903221A		Grooved Ball Bearing	1		

1 = Packaged quantities 2 = Restricted availability 3 = Parts being phased out 4 = not available individually 5 = see separate list

https://truckmanualshub.com/

Alternator And Single Parts ADG

Pos.	Part-No.	I	Designation	Qantity	replaced by	Remarks
	-		For Alternator:			1,2,3
8	VW049903223		Intermediate Ring	1		
	-		For Alternator:			1,2,3
9	VW056903291		Suppression Condenser	1		
	-		For Alternator:			1,2,3
10	VW028903320B		Repair Kit ForAlternator	1		
	-		Alternator			1,2,3,4
11	-		No Longer Available	1		
	-		For Alternator:			2,3
12	VW069903359D		Diode Plate	1		
	-		For Alternator:			1-3
13	VW049903515C		1 Set: Carbon Brushes	1		
	-		For Alternator:			2,3
14	-		No Longer Available			
15	VW049903537B		End Shield	1		
	-		For Alternator:			1
15	VW036903537C		End Shield	1		
	-		For Alternator:			2
15	VW026903537A		Starter Drive Housing	1		
	-		For Alternator:			3
16	VW059903543		Retaining Plate	1		
	-		For Alternator:			1,2,3
17	VW049903555A		Fillister Head Bolt (Combi.)	3		
	-		For Alternator:			2,3
19	VW037903555		Fillister Hd. Bolt	4		
20	VW068903791E		1 Set: Connecting Parts For	1		
	-		Terminal			

1 = Packaged quantities 2 = Restricted availability 3 = Parts being phased out 4 = not available individually 5 = see separate list

https://truckmanualshub.com/

Alternator And Single Parts ADG

Pos.	Part-No.	I	Designation	Qantity	replaced by	Remarks
	-		For Alternator:			1,2,3
21	VW068903803DX		Voltage Regulator	1		
	-		For Alternator:			1,2,3
21	VW028903803D		Voltage Regulator	1		
	-		For Alternator:			4
22	VWN 10218708		Hexagonal Nut	1		
	-		For Alternator:			1
22	VW037903181		Shouldered Nut	1		
	-		For Alternator:			2,3
-	VWN 0122333		Spring Washer	1		
	-		For Alternator:			1
-	VWN 0122385		Spring Washer	1		
	-		For Alternator:			1,2
23	VWN 0107042		Cheese Head Bolt	1		
	-		For Alternator:			1,2,3
24	VWN 01100830		Hexagonal Nut	1		
	-		For Alternator:			1,2,3
25	VWN 0115227		Washer	2		
	-		For Alternator:			1,2,3
25	VWN 0122213		Spring Washer	2		
	-		For Alternator:			1,3
26	VWN 0115562		Washer	X		
	-		For Alternator:			1
26	VWN 01152318		Washer	1		
	-		For Alternator:			2
27	VWN 0122224		Spring Washer	1		
	-		For Alternator:			1,2

1 = Packaged quantities 2 = Restricted availability 3 = Parts being phased out 4 = not available individually 5 = see separate list

https://truckmanualshub.com/

Alternator And Single Parts ADG

Pos.	Part-No.	I	Designation	Qantity	replaced by	Remarks
28	VWN 0127082		Woodruff Key	1		
	-		For Alternator:			1,2,3
29	VWN 0141251		Fillister Hd. Bolt	2		
	-		For Alternator:			1,2,3
30	VWN 10017303		Hexagon Nut, Shouldered	1		
	-		For Alternator:			1,2,3
31	VWN 90403002		Cover Cap	1		
	-		For Alternator:			1,2,3

1 = Packaged quantities 2 = Restricted availability 3 = Parts being phased out 4 = not available individually 5 = see separate list

https://truckmanualshub.com/

https://truckmanualshub.com/

Alternator And Single Parts ADF

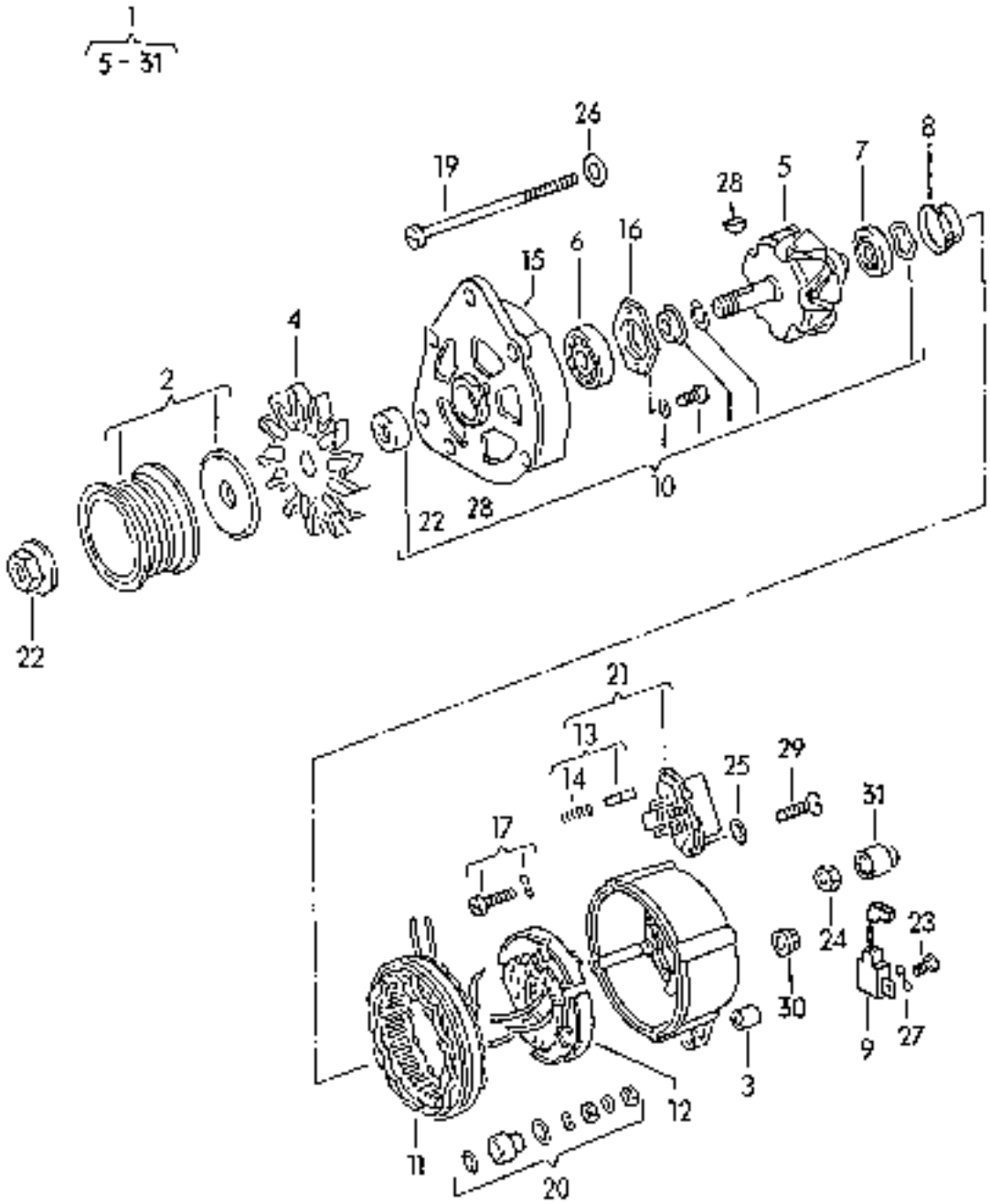

117903100.tif

https://truckmanualshub.com/

Alternator And Single Parts ADF

Pos.	Part-No.	I	Designation	Qantity	replaced by	Remarks
1	VW026903017AX		Alternator	1		
1	VW068903017NX		Alternator	1		
4	VW068903171		Fan Wheel	1		
	-		For Alternator:			3,5
5	VW069903213E		Claw-Pole Rotor	1		
	-		For Alternator:			2
5	-		No Longer Available	1		
	-		For Alternator:			1
6	VW021903221E		Grooved Ball Bearing	1		
	-		For Alternator:			1,2
7	VW054903221A		Grooved Ball Bearing	1		
	-		For Alternator:			2
8	VW049903223		Intermediate Ring	1		
	-		For Alternator:			1,2
9	VW056903291		Suppression Condenser	1		
	-		For Alternator:			2
10	VW028903320B		Repair Kit ForAlternator	1		
	-		Alternator			1,2
11	-		No Longer Available	1		
	-		For Alternator:			2
11	-		No Longer Available	1		
	-		For Alternator:			1
12	VW069903359D		Diode Plate	1		
	-		For Alternator:			1,2
12	VW036903359H		Diode Plate	1		
	-		For Alternator:			1
13	VW049903515C		1 Set: Carbon Brushes	1		

1 = Packaged quantities 2 = Restricted availability 3 = Parts being phased out 4 = not available individually 5 = see separate list

https://truckmanualshub.com/

Alternator And Single Parts ADF

Pos.	Part-No.	I	Designation	Qantity	replaced by	Remarks
	-		For Alternator:			1,2
14	-		No Longer Available			
15	VW049903537B		End Shield	1		
	-		For Alternator:			1
15	VW026903537A		Starter Drive Housing	1		
	-		For Alternator:			2
16	VW059903543		Retaining Plate	1		
	-		For Alternator:			2
17	VW049903555A		Fillister Head Bolt (Combi.)	3		
	-		For Alternator:			1,2
19	VW037903555		Fillister Hd. Bolt	4		
20	VW068903791E		1 Set: Connecting Parts For	1		
	-		Terminal			
	-		For Alternator:			1,2
21	VW068903803DX		Voltage Regulator	1		
	-		For Alternator:			1,2
22	VW037903181		Shouldered Nut	1		
	-		For Alternator:			1,2
23	VWN 0107042		Cheese Head Bolt	1		
	-		For Alternator:			2
24	VWN 01100830		Hexagonal Nut	1		
	-		For Alternator:			1,2
25	VWN 0115227		Washer	2		
	-		For Alternator:			1,2
25	VWN 0122213		Spring Washer	2		
	-		For Alternator:			1,2
26	VWN 01152318		Washer	1		

1 = Packaged quantities 2 = Restricted availability 3 = Parts being phased out 4 = not available individually 5 = see separate list

https://truckmanualshub.com/

Alternator And Single Parts ADF

Pos.	Part-No.	I	Designation	Qantity	replaced by	Remarks
	-		For Alternator:			1
27	VWN 0122385		Spring Washer	1		
	-		For Alternator:			1
28	VWN 0127082		Woodruff Key	1		
	-		For Alternator:			2
29	VWN 0141251		Fillister Hd. Bolt	2		
	-		For Alternator:			2
30	VWN 10017303		Hexagon Nut, Shouldered	1		
	-		For Alternator:			2
31	VWN 90403002		Cover Cap	1		
	-		For Alternator:			1,2
-	VWN 0122333		Spring Washer	1		
	-		For Alternator:			1

1 = Packaged quantities 2 = Restricted availability 3 = Parts being phased out 4 = not available individually 5 = see separate list

https://truckmanualshub.com/

Connecting And Mounting Parts For Alternator Ribbed V-Belt ADG

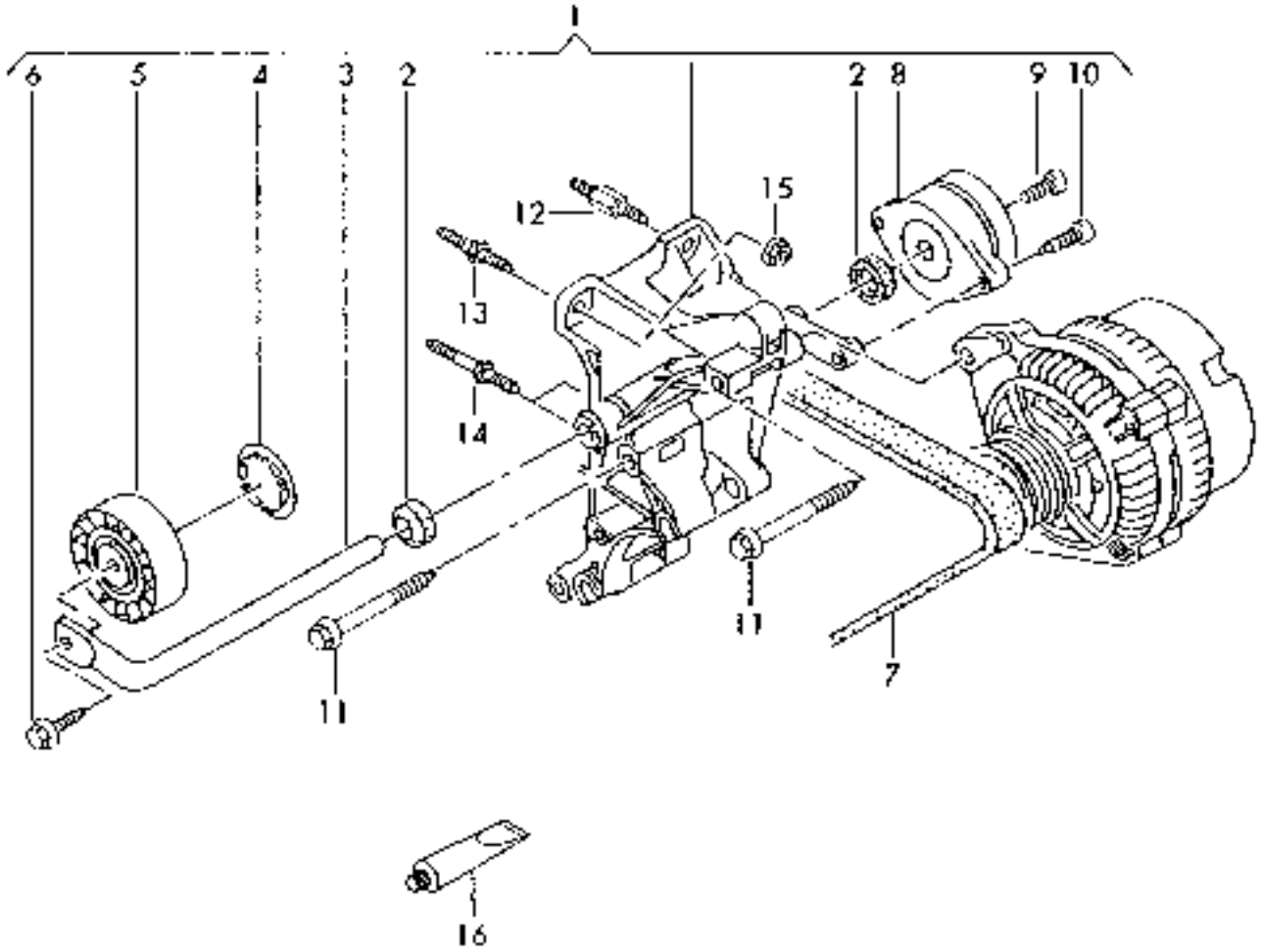

423 903-35 03-03 423903350.tif

https://truckmanualshub.com/

Connecting And Mounting Parts For Alternator Ribbed V-Belt ADG

Pos.	Part-No.	I	Designation	Qantity	replaced by	Remarks
1	VW028903139T		Bracket For Alternator	1		
	-		For Vehicles With Air Condit.			
2	VW028903310		Dust Cap	2		
3	VW028903308G		Tensioning Lever	1		
4	VW028145291B		Protective Cap	1		
	-		Only For:			028 145 278 E
5	VW028145278E		Relay Roller	1		
	-		With Threaded Bush			M8
6	VWN 01953310		Hexagon Head Bolt C/W Shoulder	2		
7	VW028903137BB		Ribbed V-Belt	1		
	-		For Alternator:			120A
8	VW028903315R		Tensioner	1		
9	VWN 0147404		Allen Key Head	1		
	-		Bolt			
10	VWN 90493801		Allen Key Head	2		
	-		Bolt			
11	VWN 10120803		Hexagon Head Bolt C/W Shoulder	2		
12	VW028260821C		Stud With Shoulder	1		
13	VW028260821		Stud With Shoulder	1		
14	VW028260821A		Stud With Shoulder	2		
15	VWN 0230038		Hexagonal Nut	4		
	-		Self-Locking			
15	VWN 90229102		Hexagon Nut, Shouldered	4		
16	VWG 052735A2		Universal Grease	1		

1 = Packaged quantities 2 = Restricted availability 3 = Parts being phased out 4 = not available individually 5 = see separate list

https://truckmanualshub.com/

Connecting And Mounting Parts For Alternator ADF

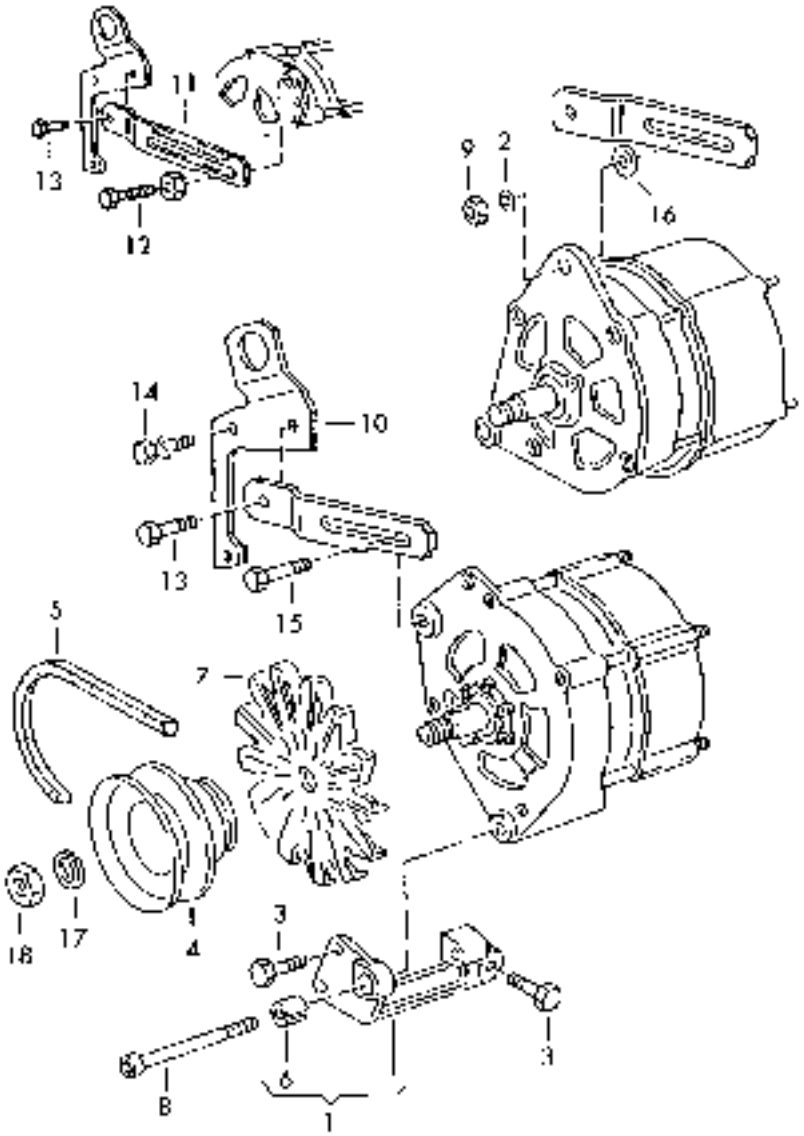

421903350.tif

https://truckmanualshub.com/

Connecting And Mounting Parts For Alternator ADF

Pos.	Part-No.	I	Designation	Qantity	replaced by	Remarks
1	VW049903103B		Bracket For Alternator	1		
3	VWN 01024222		Hexagonal Head Bolt	2		
4	VW049903119L		pulley	1		
5	VW050903137		v belt	1		
6	VW049903149		Bush	1		
8	VWN 0447591		Allen Key Head	1		
	-		Bolt			
10	VW026903245A		Retainer	1		ADF
						ADF
						ADF
11	VW026903247B		Angled Bracket	1		ADF
						ADF
						ADF
12	VW034903555B		Bolt	1		ADF
						ADF
						ADF
13	VWN 0195024		Hexagon Head Bolt C/W Shoulder	1		ADF
						ADF
						ADF
14	VWN 01024222		Hexagonal Head Bolt	2		
	-		Also Use:			N 012 241 10
-	VWN 01224110		Spring Washer	2		
15	VWN 0197002		Hexagon Head Bolt C/W Shoulder	1		=>| 03.94
16	VWN 0116961		Washer	1		=>| 03.94
17	VWN 0120442		Spring Ring	1		=>| 03.94
18	VWN 10218708		Hexagonal Nut	1		=>| 03.94
-	VW036903121		Spring Shackle	1		=>| 03.94

1 = Packaged quantities 2 = Restricted availability 3 = Parts being phased out 4 = not available individually 5 = see separate list

https://truckmanualshub.com/

Connecting And Mounting Parts For Alternator ADG

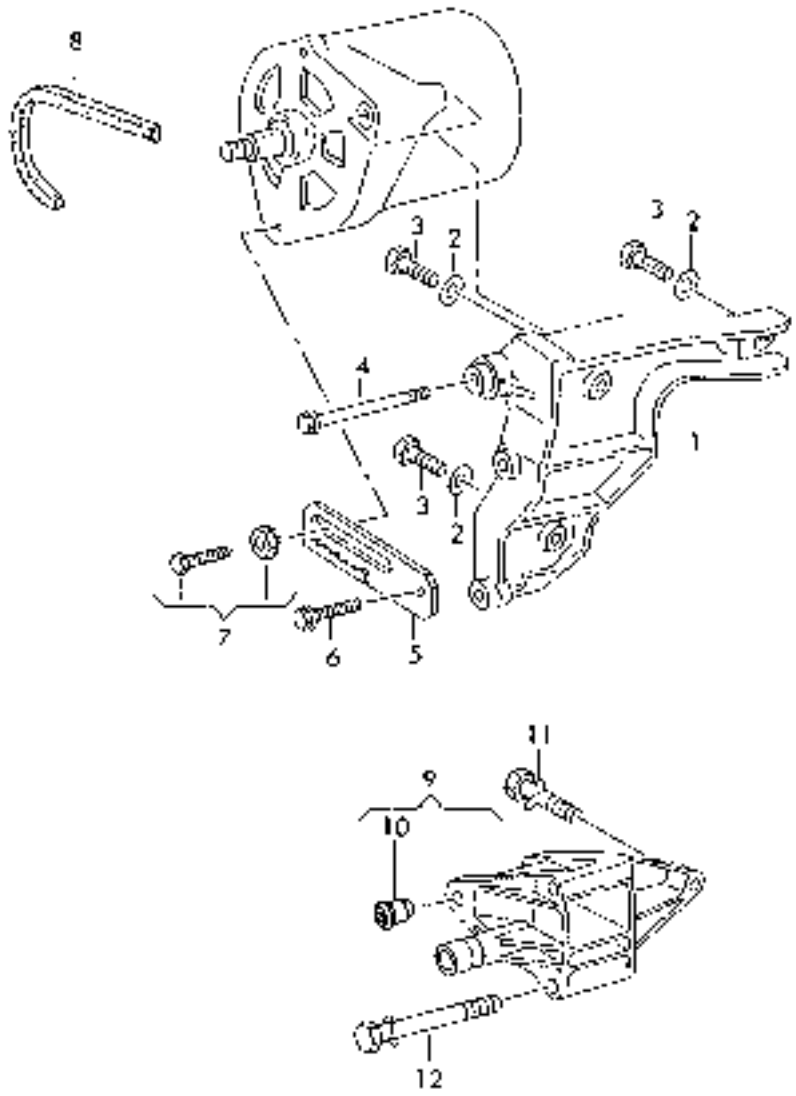

423903400.tif

https://truckmanualshub.com/

Connecting And Mounting Parts For Alternator ADG

Pos.	Part-No.	I	Designation	Qantity	replaced by	Remarks
1	VW068903141R		Bracket For Alternator	1		
2	VWN 01155811		Washer	3		
-	VW068903147H		Bush	1		
-	VW075145265B		Sleeve	3		ADG
						ADG
						ADG
3	VWN 01024118		Hexagonal Head Bolt	3		
4	VWN 10067003		Hexagon Head Bolt C/W Shoulder	1		
5	VW068903251H		Angled Bracket	1		
	-		Also Use:			034 903 555 B
6	VWN 0103805		Hexagonal Head Bolt	1		
	-		Also Use:			N 015 401 3
-	VWN 0154013		Washer	1		
7	VW034903555B		Bolt	1		
8	VW068903137Q		V-Belt	1		

1 = Packaged quantities 2 = Restricted availability 3 = Parts being phased out 4 = not available individually 5 = see separate list

https://truckmanualshub.com/

Connecting And Mounting Parts For Alternator ADF

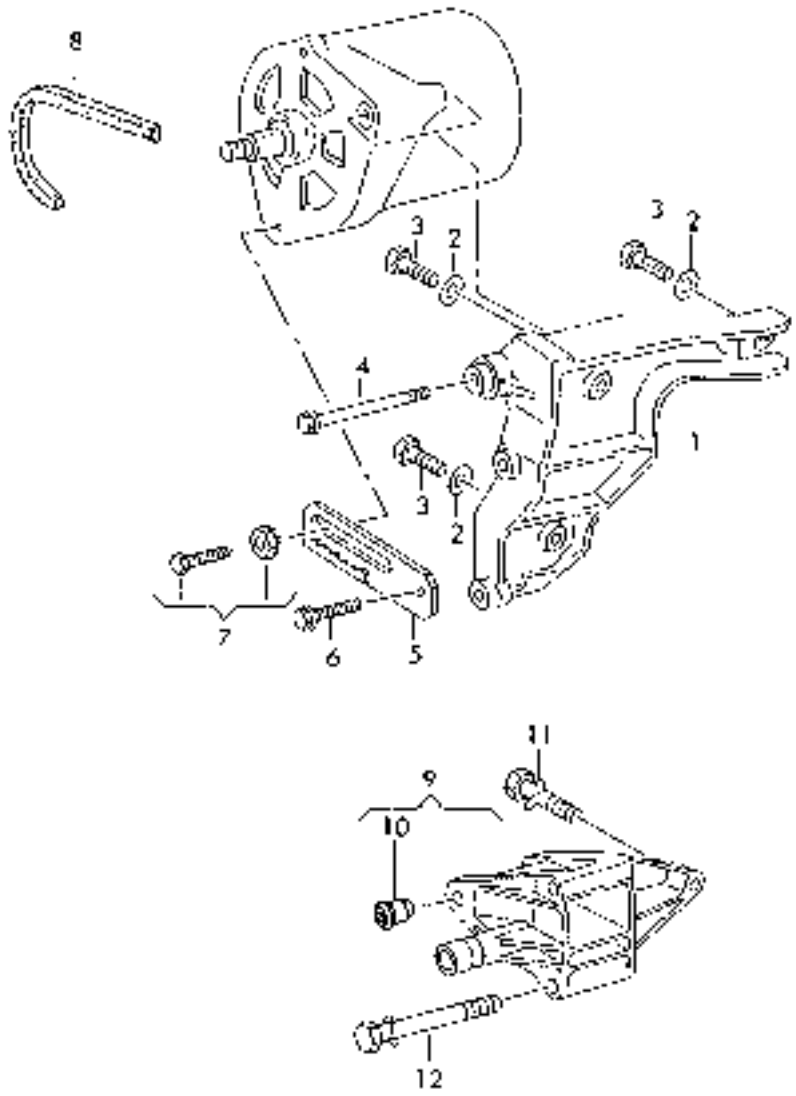

423903400.tif

https://truckmanualshub.com/

Connecting And Mounting Parts For Alternator ADF

Pos.	Part-No.	I	Designation	Qantity	replaced by	Remarks
1	VW068903141R		Bracket For Alternator	1		ADF
-	VW068903147H		Bush	1		ADF
2	VWN 01155813		Scheibe	3		
3	VWN 90215604		Allen Key Head Bolt	2		
	-		(combi)			
-	VW075145265B		Sleeve	1		ADF
5	VW068903251H		Angled Bracket	1		
	-		Also Use:			034 903 555 B
6	VWN 01953310		Hexagon Head Bolt C/W Shoulder	1		
7	VW034903555B		Bolt	1		

1 = Packaged quantities 2 = Restricted availability 3 = Parts being phased out 4 = not available individually 5 = see separate list

https://truckmanualshub.com/

Ignition Coil Ignition Lead ADF

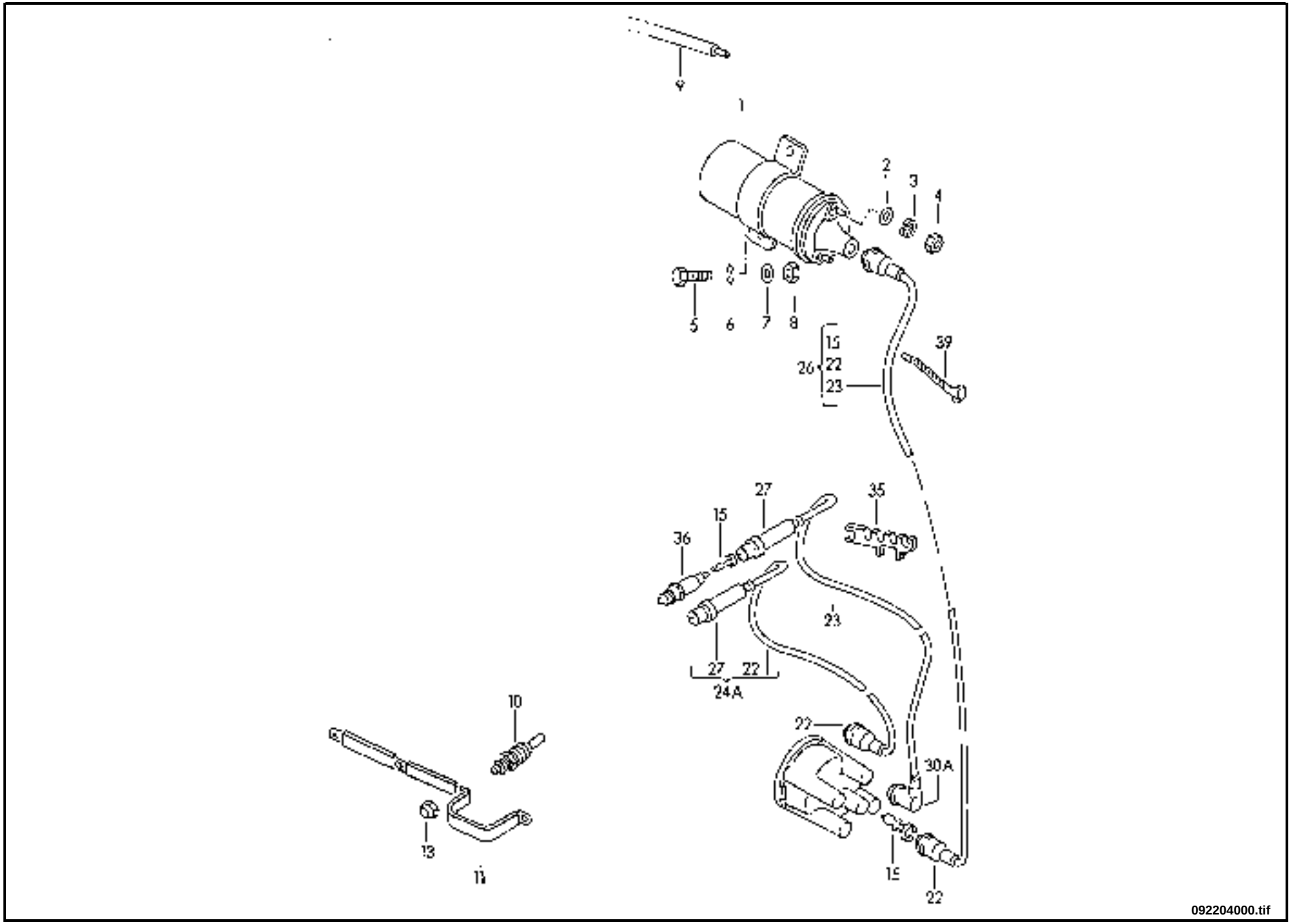

https://truckmanualshub.com/

Ignition Coil Ignition Lead ADF

Pos.	Part-No.	I	Designation	Qantity	replaced by	Remarks
36	VW101000005AD		Spark Plug Longlife			
	-		M >> ADF 011 133			
36	VW101000001AD		Spark Plug Longlife			
	-		M >> ADF 011 133			
36	VW101000036AC		Spark Plug Longlife			
	-		M >> ADF 011 133			
36	VW101000005AE		Spark Plug Longlife'			
	-		M ADF 011 134>>			

1 = Packaged quantities 2 = Restricted availability 3 = Parts being phased out 4 = not available individually 5 = see separate list

https://truckmanualshub.com/

Ignition Distributor ADF

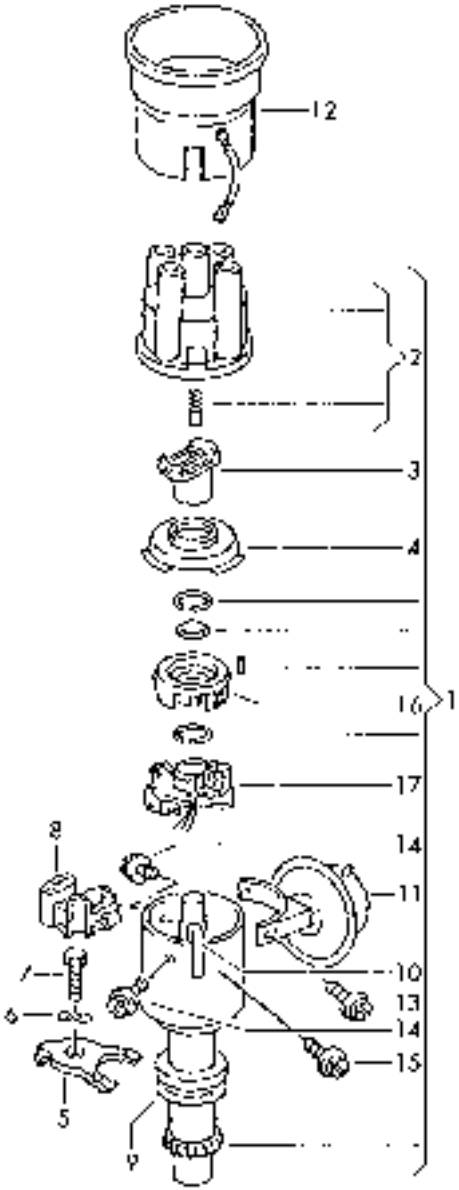

421905250.tif

https://truckmanualshub.com/

Ignition Distributor ADF

Pos.	Part-No.	I	Designation	Qantity	replaced by	Remarks
1	VW026905237AX		Ignition Distributor	1		
2	VW027905207		Distributor Cap	1		
3	VW055905225B		Rotor For Distributor	1		
3	VW026905225C		Rotor WithSpeed Limiter	1		
4	VW039905241		Dust Protection Cover	1		
5	VW028905256		Retainer	1		
6	VWN 01224110		Spring Washer	1		
7	VWN 01024222		Hexagonal Head Bolt	1		
8	VW035905331B		Tip Jack	1		
9	VW056905261		Seal	1		
10	VW034905265		Retaining Spring	2		
11	VW026905271		Vacuum Unit	1		
12	VW035905209A		Screening Ring	X		
13	VW059998225		Fillister Head Bolt (Combi.)	1		
14	VW035905281A		Fillister Head Bolt (Combi.)	2		
15	VW049905281A		Fillister Head Bolt (Combi.)	1		
16	-		No Longer Available			
17	VW034998065		Hall Sender With Mounting	1		
	-		Parts			

1 = Packaged quantities 2 = Restricted availability 3 = Parts being phased out 4 = not available individually 5 = see separate list

https://truckmanualshub.com/

Starter ADG,BEQ,BEU

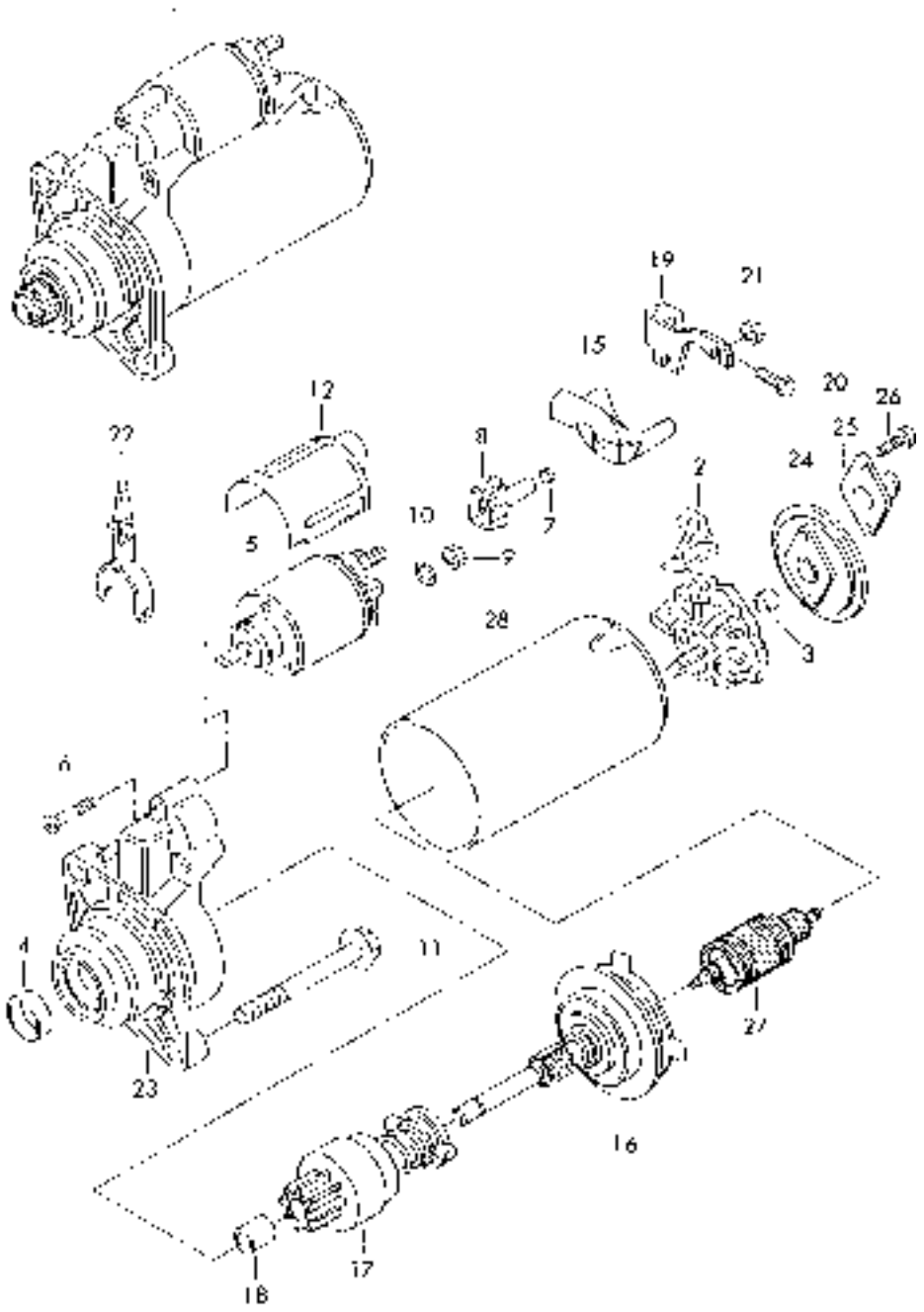

176911000.tif

https://truckmanualshub.com/

Starter ADG,BEQ,BEU

Pos.	Part-No.	I	Designation	Qantity	replaced by	Remarks
1	VW068911024GX		-sx starter	1		ADG,BEQ,BEU
	-		Single Parts			BOSCH
2	VW068911209J		Brush Holder Plate	1		
	-		For Starter:			1
3	VW035911213B		Bearing Bush	1		
4	VW059911257B		Bearing Bush	1		
5	VW068911287H		Solenoid Switch	1		
6	VW035911299B		Torx Socket Head Bolt	3		
7	VW357972742C		Single Wiring Seal	X		Green
	-					4,0
8	VW357972771		Flat Contact Housing	1		1 Pin
9	VWN 01111816		Hexagonal Nut	1		
10	VWN 0120387		Lock Ring	1		
11	VWN 01036112		Hexagonal Head Bolt	2		
11	VWN 90766002		Double Stud With Hexagon Drive	2		
	-		For Starter:			3
15	VW8D0911483A		Anti-Twist Retainer	1		
16	VW068911303F		Planetary Gear	1		
17	VW068911335H		Freewheel Unit	1		
	-		For Starter:			1
18	VW02B911213		Bearing Bush	1		
21	VWN 90512601		Hex. Nut With Washer	2		
22	VW02B911365		Engaging Lever	1		
23	VW068911255S		Starter Drive Housing	1		
26	VWN 0141233		Fillister Hd. Bolt	2		

1 = Packaged quantities 2 = Restricted availability 3 = Parts being phased out 4 = not available individually 5 = see separate list

https://truckmanualshub.com/

Starter ADF,BEF

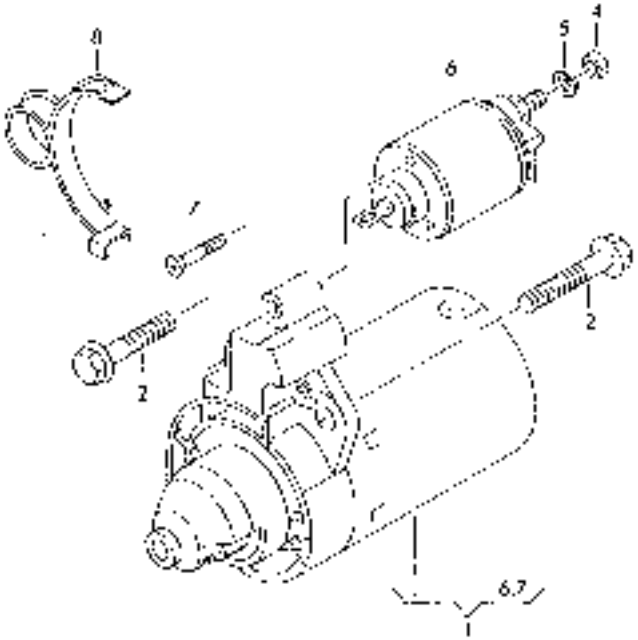

448911000.tif

https://truckmanualshub.com/

Starter ADF,BEF

Pos.	Part-No.	I	Designation	Qantity	replaced by	Remarks
1	VW068911024F		starter motor	1		ADF,BEF
1	VW068911024GX		-sx starter	1		ADF,BEF
	-		Single Parts			BOSCH
4	VWN 01111816		Hexagonal Nut	1		
5	VWN 0120387		Lock Ring	1		
6	VW068911287H		Solenoid Switch	1		
	-		For Starter:			1,2,3
7	VW035911299B		Torx Socket Head Bolt	3		
8	VW8D0911483A		Anti-Twist Retainer	1		
	-		For Starter:			1,2

1 = Packaged quantities 2 = Restricted availability 3 = Parts being phased out 4 = not available individually 5 = see separate list

https://truckmanualshub.com/

Glow Plug Wiring Harness For Alternator ADG,BXT,BEQ,BEU,BJC

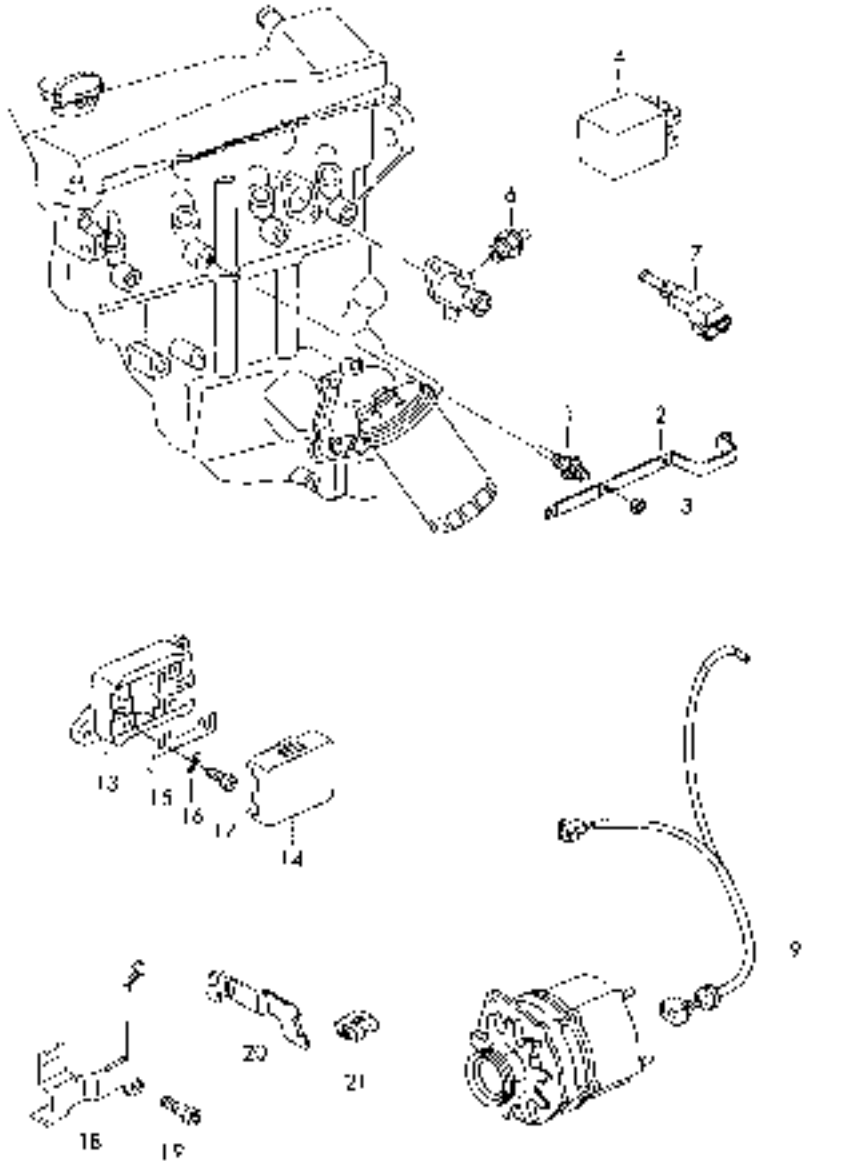

425972000.tif

https://truckmanualshub.com/

Glow Plug Wiring Harness For Alternator ADG,BXT,BEQ,BEU,BJC

Pos.	Part-No.	I	Designation	Qantity	replaced by	Remarks
1	VWN 10213002		Glow Plug	4		ADG M12X1,25X21
1	VWN 10213001		Glow Plug	4		ADG M12X1,25X21
1	VWN 10140104		Glow Plug	4		BXT,BEQ,BEU,BJC
1	VWN 10140105		Glow Plug	4		BXT,BEQ,BEU,BJC
2	VW068972095B		Current Rail	1		ADG
3	VWN 0221544		Hexagon Nut, Self-Locking	4		ADG
4	VW191911261C		glow plug relay	1		ADG
4	VW357911253		Control Unit For Glow Plug	1		BXT,BEQ,BJC
	-		Relay Location/Code No.:			BXT,BEQ,BJC
						BXT,BEQ,BJC
						BXT,BEQ,BJC
6	VW068919369		temperature switch	1		ADG
	-		For Coolant Temperature			ADG
	-		Gauge			ADG
6	VW251919501D		switch temperature	1		ADG 2 Pin
	-		For Glow Plug Relay			ADG Green/Black 20MM

1 = Packaged quantities 2 = Restricted availability 3 = Parts being phased out 4 = not available individually 5 = see separate list

https://truckmanualshub.com/

Wiring Harness For Alternator ADF

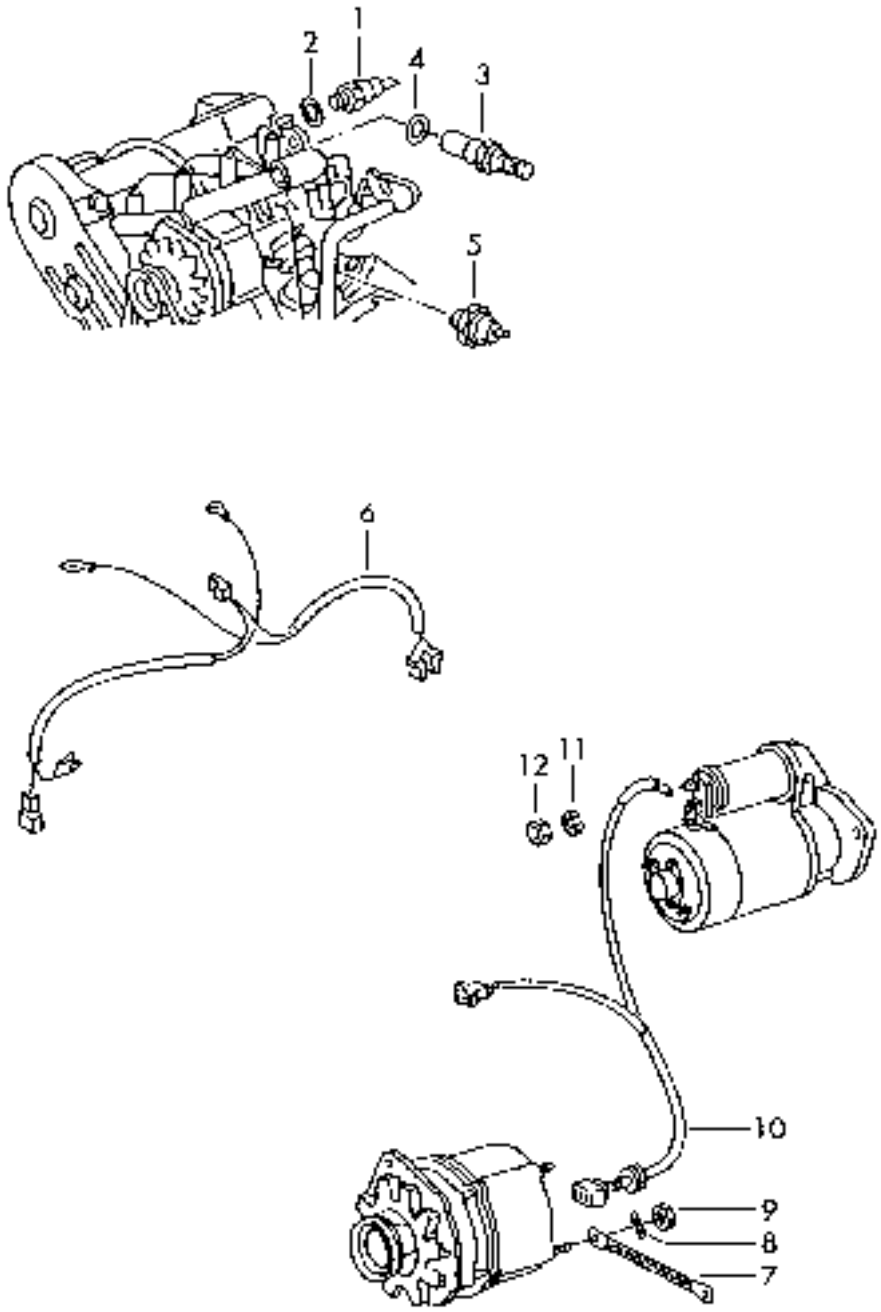

421972000.tif

https://truckmanualshub.com/

Wiring Harness For Alternator ADF

Pos.	Part-No.	I	Designation	Qantity	replaced by	Remarks
1	VW028919081H		Oeldruckschalter	1		1 Pin Blue
5	VW068919369		temperature switch	1		
	-		For Coolant Temperature			
	-		Gauge			
5	VW251919501D		switch temperature	1		2 Pin
	-		For Coolant Temperature			
	-		Gauge			Green/Black
	-		Also Use:			N 903 168 02
-	VWN 90316802		seal	2		
-	VW051971843B		Bracket For Breather Pipe	1		

1 = Packaged quantities 2 = Restricted availability 3 = Parts being phased out 4 = not available individually 5 = see separate list

https://truckmanualshub.com/

https://truckmanualshub.com/

POWER UNIT: ENGINE/MOTOR 01

DRIVE TRANSMISSION 02

CHASSIS, BODYWORK AND FITTINGS 03

STEERING AND WHEELS 04

CONTROLS 05

ELECTRIC EQUIPMENT 06

HYDRAULIC UNIT 07

MAST ASSEMBLY AND AUXILIARY HYDRAULIC SE 08

SPECIAL EQUIPMENT 09

MISCELLANEOUS 10

https://truckmanualshub.com/

https://truckmanualshub.com/

Register 01 : POWER UNIT: ENGINE/MOTOR

01/01	00 - 01	OIL FILTER FOR ENGINE
01/02	00 - 02	AIR SUPPLY FOR ENGINE AND AIR FILTER
01/03	00 - 03	ENGINE SUSPENSION
01/04	00 - 03	COOLING SYSTEM
01/05	00 - 03	FUEL SYSTEM DIESEL ENGINE
01/06	00 - 02	WATER SEPARATOR DIESEL ENGINE C1X350N00053 |=>
01/07	00 - 02	EXHAUST SYSTEM
01/08	00 - 03	LPG SYSTEM
01/09	00 - 04	LPG SYSTEM (CATALYZER GOVERNED)
01/10	00 - 04	LPG TANK
01/11	00 - 02	GUARD DUST - FILTER PRELIMINARY INSTALLAT.
01/12	00 - 04	PARTICLE FILTER SYSTEM =>I 08/2002
01/13	00 - 03	PARTICLE FILTER SYSTEM 09/2002 |=>
01/14	00 - 02	PARTICLE FILTER

https://truckmanualshub.com/

OIL FILTER FOR ENGINE

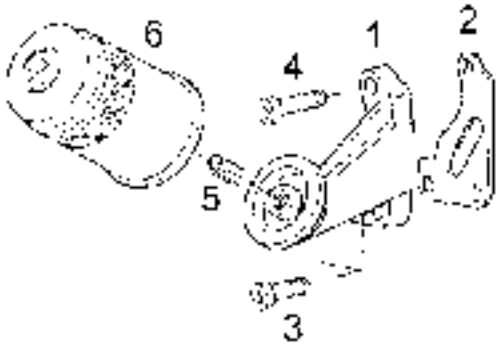

350.803.01.23

3508030123.tif

https://truckmanualshub.com/

OIL FILTER FOR ENGINE

Pos.	Part-No.	I	Designation	Qantity	replaced by	Remarks
1	000 980 20 00		part upper assy.	1		
2	000 961 91 04		seal	1		
3	9 045 311 183	1	socket-head screw ISO 4762 M8x25-8.8	2		
4	9 045 316 188	1	socket-head screw ISO 4762 M8x35-8.8-A2C	1		
5	000 916 88 02		tapped bush 12,4-3/4-16UNF	1		
6	000 983 06 08		filter	1		

1 = Packaged quantities 2 = Restricted availability 3 = Parts being phased out 4 = not available individually 5 = see separate list

https://truckmanualshub.com/

AIR SUPPLY FOR ENGINE AND AIR FILTER

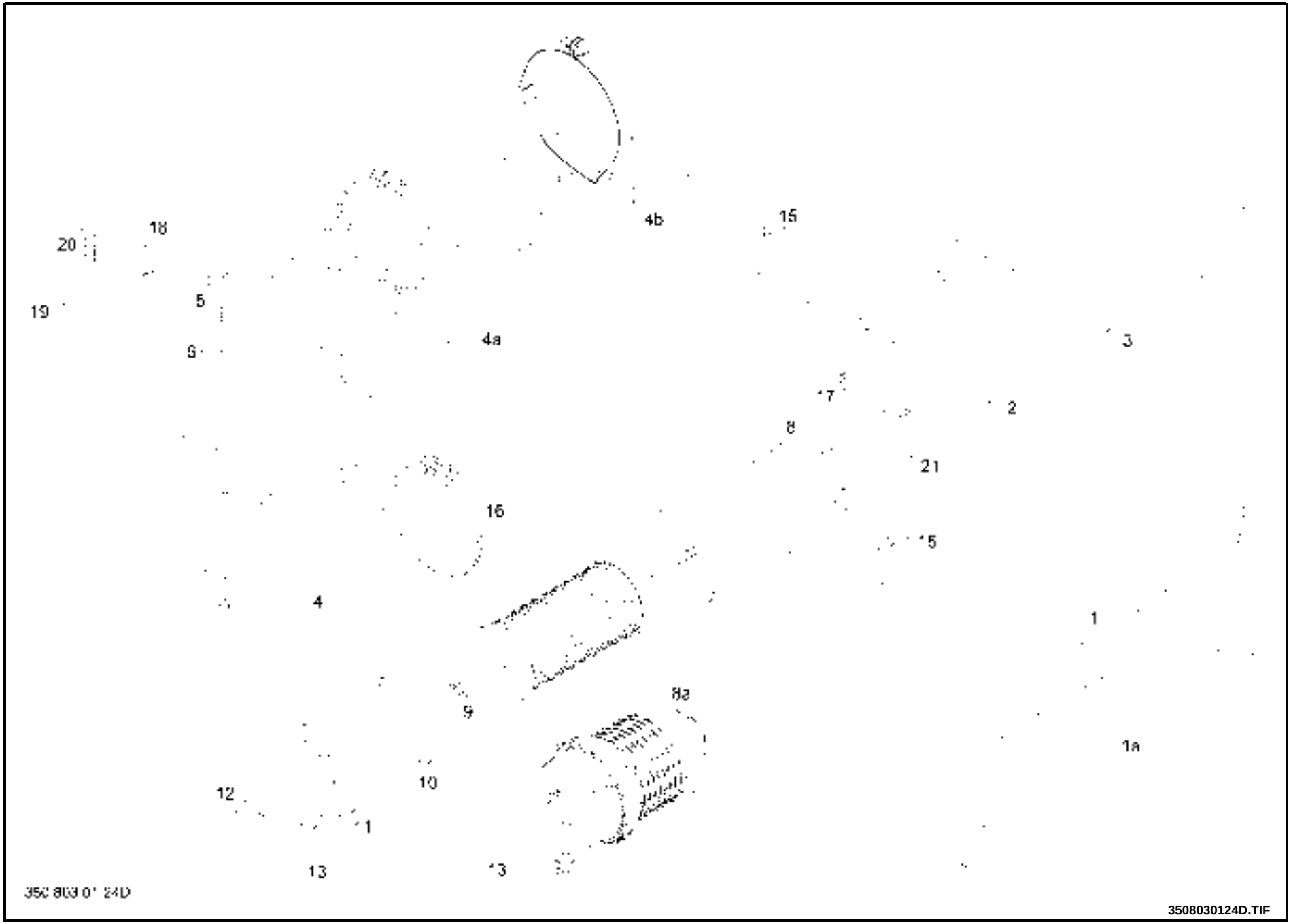

https://truckmanualshub.com/

AIR SUPPLY FOR ENGINE AND AIR FILTER

Pos.	Part-No.	I	Designation	Qantity	replaced by	Remarks
1	000 962 60 00		silencer	1		
1	000 962 60 01		hose corrugated	1		container
2	350 173 18 01		hose formed	1		=>| C1X350S00439 Diesel
2	350 173 18 06		shaped hose	1		C1X350S00440 |=> Diesel
3	350 173 18 02		formed hose	1		=>| 09/2005 LPG
3	350 173 18 07		shaped hose	1		10/2005 |=> LPG
4a	350 110 11 01		console assy.	1		=>| 12/2004
4b	350 420 50 08		battery console assy.	1		=>| 01/2005 , |=> C1X350S00439
4b	350 420 50 11		battery console assy.	1		C1X350S00440 |=> with pos. 16
5	9 007 311 306	1	hexagon head bolt ISO 4014 M12x50-8.8-A2C	2		
6	9 311 003 022	1	washer DIN 6340 DIN 6340-13	2		
7	000 983 20 11		dry air filter	1		=>| C1X350S00439 pos. 7-13
7a	000 983 20 68		air filter	1		C1X350S00440 |=>
8	000 983 90 12		filter cartridge	1		to pos.7
8	000 983 90 02		cartridge filter	1		to pos.7a
9	000 983 98 07		self-locking nut M8	1	9 243 281 110	
9	9 243 281 110	1	collar nut WN 14302 WN 14302-M8-8	1		
10	000 983 92 69		seal	1		
11	000 983 91 17		bottom	1		
12	000 983 98 06		nut	1		
13	000 983 81 03		valve	1		
15	000 955 20 34	1	clip hose DIN 3017 A40-60x13-W2	3		, =>|C1X350S00439
15	000 955 20 34		clip hose DIN 3017 A40-60x13-W2	1		C1X350S00440|=>
16	000 955 20 68		clip DIN 3016-2 G1-142x20-W1-1	1		

1 = Packaged quantities 2 = Restricted availability 3 = Parts being phased out 4 = not available individually 5 = see separate list

https://truckmanualshub.com/

AIR SUPPLY FOR ENGINE AND AIR FILTER

Pos.	Part-No.	I	Designation	Qantity	replaced by	Remarks
17	000 955 20 36	1	clip hose DIN 3017 A20-32x13-W2	1		
19	000 955 22 41		clip DIN 3016-1 D1-42x15-W1-1	1		
20	9 008 610 132		hexagon head screw DIN 7500 DEM6x20-ST-A3B	1		
21	000 955 20 62		clip hose DIN 3017 A50-70x13-W2	2		C1X350S00440|=>

1 = Packaged quantities 2 = Restricted availability 3 = Parts being phased out 4 = not available individually 5 = see separate list

https://truckmanualshub.com/

https://truckmanualshub.com/

ENGINE SUSPENSION

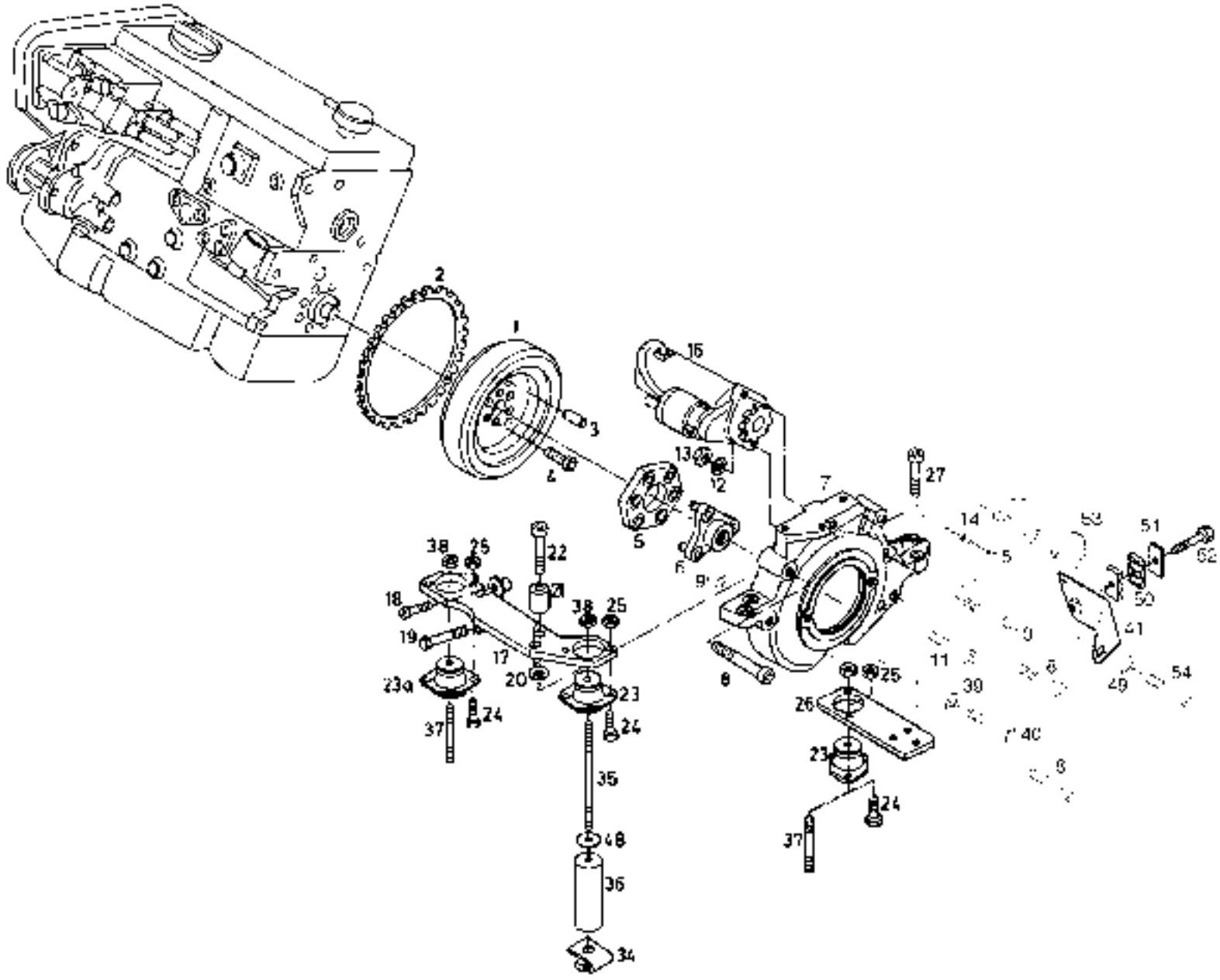

3508030125A.tif

https://truckmanualshub.com/

ENGINE SUSPENSION

Pos.	Part-No.	I	Designation	Qantity	replaced by	Remarks
	350 221 05 07		motor	1		diesel engine
	000 971 03 03		alternator	1		
	000 971 03 93		alternator exchange	1		
	350 363 14 17		support	1		
	9 008 311 183		hexagon head screw ISO 4017 M8x25-8.8-A2C	4		
	9 294 003 018		washer DIN 433 DIN 433-8,4-ST50-A2C	3		
	000 973 13 02		relay	1		
	000 903 10 51		hollow screw HOS-8-A3C	1		
	000 926 50 02		belt-v	1		
	000 976 31 08		box fuse HOS-8-A3C	1		
	000 983 99 29		clamping piece HOS-8-A3C	1		
	000 903 48 03		bolt clamping HOS-8-A3C	1		
	000 901 15 21		hexagon head screw M8X98-Y6921-10 9	1		
	000 903 10 52		hollow screw HOS-8-A3C-ALT.	1		
	000 954 13 02		union banjo	1		
	350 221 05 02		engine	1		LPG engine
	000 972 17 02		ignition coil	1		
	350 350 50 00		shifting device	1		
	350 030 15 00		flywheel assy.	1		Diesel and LPG
	000 906 35 06		sleeve	2		
	000 938 19 88		label HOS-8-A3C	1		
	350 030 15 04	3	flywheel assy.	1	350 030 15 06	= pos. 1-3
	350 030 15 06		flywheel assy. LX	1		= pos. 1-3
1	----------	4	flywheel	1		
2	350 032 12 00		ring gear	1		=>|C1X350S00370
						C1X350S00390/341,C1X350S00426-435
2	----------	4	rim toothed	1		C1X350S00371|=>

1 = Packaged quantities 2 = Restricted availability 3 = Parts being phased out 4 = not available individually 5 = see separate list

https://truckmanualshub.com/

ENGINE SUSPENSION

Pos.	Part-No.	I	Designation	Qantity	replaced by	Remarks
3	000 912 10 68		*****	3		
4	9 045 371 281	1	screw ISO 21269 M10x1x20-12.9	6		
5	300 232 21 00	3	washer disc	1	350 232 22 00	=>|C1x350T00124
5	350 232 22 00		fabric disc	1		C1x350T00125|=>
6	-		coupling flange	1		see page 02/04/01 Pos.17
7	350 231 14 09		intermediate flange	1		
8	9 045 311 314	1	cheese-head screw ISO 4762 M12x90-8.8-A2C	3		
9	000 906 35 06		sleeve	2		
10	9 045 316 312	1	screw cap hd ISO 4762 M12x80-8.8-A2C	1		
11	9 045 316 372	1	socket head screw ISO 4762 M12x100-8.8-A2C	2		
12	9 294 003 022	1	washer DIN 433 DIN 433-13x20x2-A2C	1		
13	9 210 281 140	1	hexagon nut ISO 4032 DIN 934-M12-8A2C	1	000 905 04 02	
13	000 905 04 02	1	square nut M12	1		
14	9 380 620 204	1	spring dowel sleeve ISO 8752 4x8-ST	1		
15	9 380 620 142	1	spring dowel sleeve ISO 8752 2,5x20-ST	1		
16	000 971 01 00	3	starter motor	1	000 971 01 06	=>|C1X350P00228
16	000 971 01 06		starter motor	1		C1X350P00229|=>
16	000 971 01 80	3	starter motor exchange	1	000 971 01 91	
16	000 971 01 91		-sx starter motor exchange	1		
17	350 210 01 02		support engine assy.	1		
18	9 045 316 245	1	screw cap skt hd ISO 4762 M10x45-8.8-A2C	1		
19	9 007 311 249	1	hexagon head bolt ISO 4014 M10x65-8.8-A2C	1		
20	000 914 17 28		washer 17x26x6ST	2		
21	000 916 17 31		bush 17X30X31	2		
22	9 045 311 416	1	socket-head screw ISO 4762 M16x70-8.8-A2C	2		
23	000 965 41 00		bumper rubber G12x48-70	2		
23a	000 965 40 54		rubber steel mounting	1		

1 = Packaged quantities 2 = Restricted availability 3 = Parts being phased out 4 = not available individually 5 = see separate list

https://truckmanualshub.com/

Pos.	Part-No.	I	Designation	Qantity	replaced by	Remarks
24	9 008 311 241	1	hexagon head screw ISO 4017 M10x30-8.8-A2C	6		
25	9 210 281 130	1	nut hexagon ISO 4032 DIN 934-M10-8A2C	6		
26	350 212 04 05		plate	1		
27	9 045 311 412	1	cheese-head screw ISO 4762 M16x50-8.8	3		
34	350 210 20 10		bracket assy.	1		= Pos. 34+35
35	9 124 311 271	1	stud DIN 939	1		
36	000 993 37 18		roller	1		
37	9 124 311 248	1	stud threaded DIN 939 M10X60-939-8.8A2C	2		
38	9 210 281 130	1	nut hexagon ISO 4032 DIN 934-M10-8A2C	3		
39	000 914 16 26	1	washer	2		
40	9 008 311 412	1	hexagon head screw ISO 4017 M16x50-8.8-A2C	2		
41	350 360 64 03	1	angle assy.	1		
49	000 914 12 35	1	washer 12,5x25x4ST	1		
50	000 955 08 12		clip DIN 3015-3 Z-KP-2-R-15-15-PP	1		
51	000 955 15 00		cover plate DIN 3015-3 Z-DP-2-W1-A2C	1		
52	9 008 311 195	1	hexagon head screw ISO 4017 M8x50-8.8-A2C	1		
53	7 9149 50 922		cable binder.	1		
54	9 045 316 318	1	socket-head screw ISO 4762 M12x110-8.8-A2C	1		

1 = Packaged quantities 2 = Restricted availability 3 = Parts being phased out 4 = not available individually 5 = see separate list

https://truckmanualshub.com/

COOLING SYSTEM

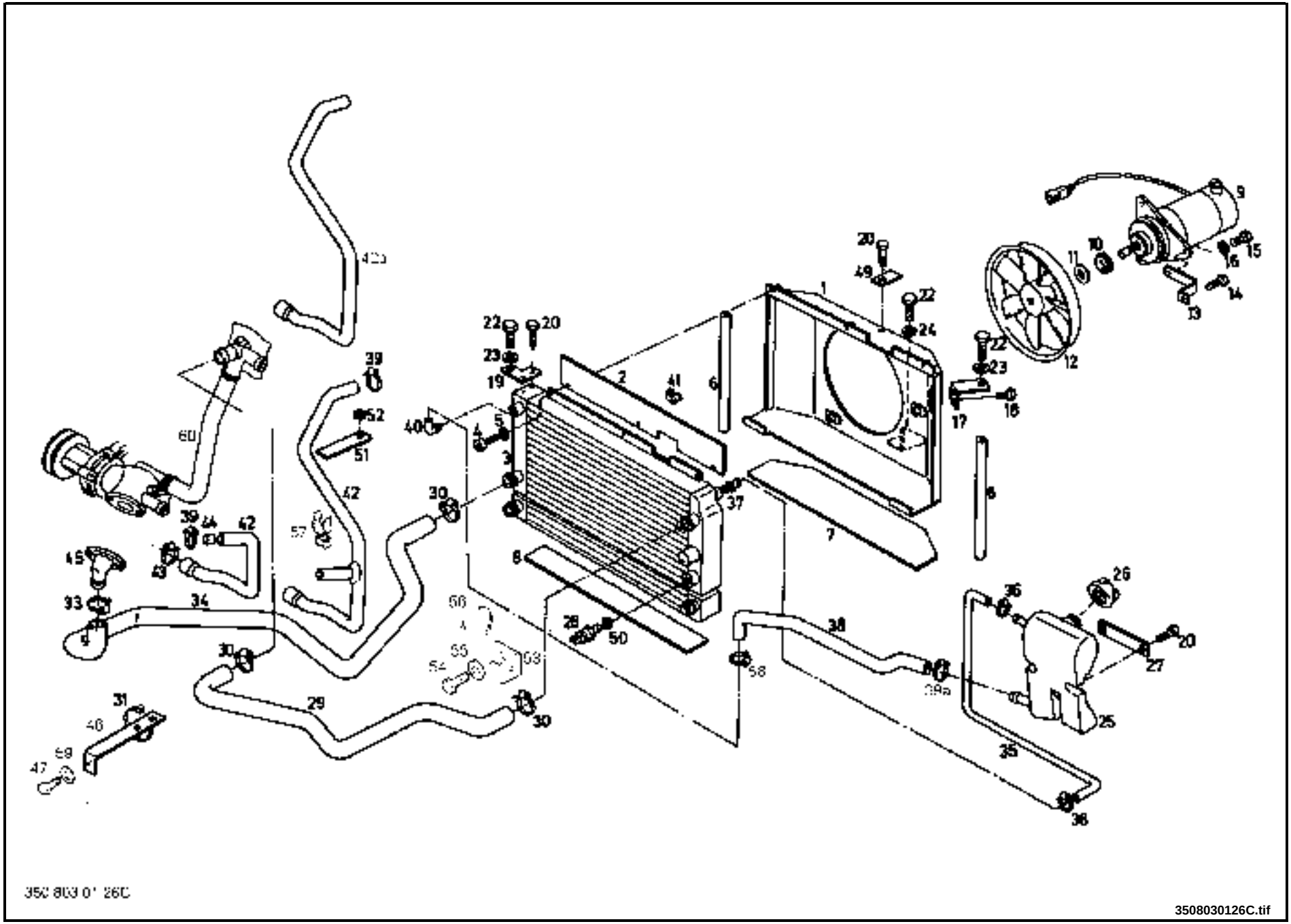

https://truckmanualshub.com/

COOLING SYSTEM

Pos.	Part-No.	I	Designation	Qantity	replaced by	Remarks
1	350 110 05 02		duct air cooling assy.	1		
2	350 116 42 06		insulating mat	1		
3	350 107 05 50		*****	1		
4	9 045 316 132	1	socket-head screw ISO 4762 M6x20-8.8-A2C	3		
5	9 309 412 014	1	washer DIN 7349 DIN 7349-6,4x17x3A2C	3		
6	000 964 12 00		sealing profile 350 mm	2		
7	350 116 42 10		damping mat	1		
8	350 116 42 00		damping mat	1		
9	000 976 10 04		motor	1		
	000 971 81 79		brush	1		to pos. 9
	350 357 05 00		bearing label	1		to pos. 9
	000 962 01 22		plug WN 17253	1		to pos. 9
	000 924 50 02		ball bearing grooved	1		to pos. 9 (bearing front)
	000 924 50 03		ball bearing grooved	1		to pos. 9 (bearing real)
10	350 105 10 00		washer	1		
11	000 907 33 06		locking disc 8	1		
12	350 106 02 00		fan wheel	1		
13	350 116 15 00		angle	3		
14	9 008 311 128	1	hexagon head screw ISO 4017 M6x16-8.8-A2C	4		
15	9 008 311 098	1	hexagon head screw ISO 4017 M5x16-8.8-A2C	3		
16	9 292 003 012	1	washer ISO 7089 A5,3-ST-A2C	3		
17	350 116 15 15		angle left	1		
18	9 008 311 126	1	hexagon head screw ISO 4017 M6x12-8.8-A2C	2		
19	350 116 15 10		angle right	1		
20	9 008 311 180	1	hexagon head screw ISO 4017 M8x20-8.8-A2C	5		=>|08/2005
20	9 008 311 180	1	hexagon head screw ISO 4017 M8x20-8.8-A2C	3		09/2005|=>
20	9 008 311 177	1	hexagon head screw ISO 4017 M8x16-8.8-A2C	2		09/2005|=>

1 = Packaged quantities 2 = Restricted availability 3 = Parts being phased out 4 = not available individually 5 = see separate list

https://truckmanualshub.com/

COOLING SYSTEM

Pos.	Part-No.	I	Designation	Qantity	replaced by	Remarks
22	9 008 311 236	1	hexagon head screw ISO 4017 M10x20-8.8-A2C	3		
23	9 309 412 020	1	washer DIN 7349 DIN 7349-10,5x25x4	2		
24	9 308 003 020	1	washer DIN9021 DIN 9021-B10.5x30x2.5	1		
25	000 982 08 09	3	reservoir	1	000 982 08 41	
25	000 982 08 41		reservoir	1		
26	000 918 46 00		locking cover	1	000 918 46 22	
26	000 918 46 22		*****	1		
27	000 918 54 04		shackle assembly	1		
28	7 9154 95 003		switch 20A	1		
29	350 108 20 02		formed hose	1		
30	000 955 20 60	1	clip hose DIN 3017 A32-50x13-W2	3		
31	000 955 20 37		cable tie 9X350 BLACK	1		
33	000 955 20 65	1	hose clamp DIN 3017	1		
34	350 108 20 11		formed flexible tube	1		
35	350 108 20 26		tube	1		
36	000 955 20 54	1	clip DIN 3017 A12-20x9-W2	2		
37	000 951 20 06		pipe union fitting	1		Loctite no. 5203
38	350 108 20 21		formed flexible tube	1		
39	000 955 20 36	1	clip hose DIN 3017 A20-32x13-W2	2		
39a	000 955 20 75	1	clamp hose	1	000 955 20 14	
39a	000 955 20 14	1	clip hose DIN 3017 A16-25x25-W2	1	000 955 20 75	
39a	000 955 20 75	1	clamp hose	1		
40	000 951 55 15		threaded pipe angle	1		
41	000 955 36 18	1	hose clip	1		
42	350 108 20 31	3	hose	1	350 108 20 42	Diesel
42a	350 108 20 42		hose	1		Diesel
42	350 108 20 36	3	formed flexible tube	1	350 108 20 09	LPG

1 = Packaged quantities 2 = Restricted availability 3 = Parts being phased out 4 = not available individually 5 = see separate list

https://truckmanualshub.com/

Pos.	Part-No.	I	Designation	Qantity	replaced by	Remarks
42a	350 108 20 09		hose	1		LPG
43	000 955 20 31	1	clip hose DIN 3017 A25-40x13-W2	1		
44	000 964 16 03		pipe	1		=>| 05/2002
45	350 105 15 01		flange	1		
46	000 918 12 15		shackle	1		
47	9 008 311 175	1	hexagon head screw ISO 4017 M8x12-8.8-A2C	1		
49	000 918 72 03		shackle assembly	1		
50	000 962 04 39	1	seal 22x32x2-V80	1		
51	000 918 71 02		support	1		LPG
52	9 210 281 090	1	hexagon nut ISO 4032 DIN 934-M6-8A2C	1		=>|07/2002 LPG
53	351 363 42 08		angle	1		
54	9 008 311 180	1	hexagon head screw ISO 4017 M8x20-8.8-A2C	1		
55	9 308 003 018	1	washer ISO 7093-1 8-200HV-A2C	1		
56	7 9149 50 922		cable binder.	1		
57	000 950 22 36		clip fastening assy. A1+A4/18-30	1		
58	000 955 20 36		clip hose DIN 3017 A20-32x13-W2	1		
59	9 292 003 018	1	washer DIN 125 DIN 125-A8,4x16x1,6-A2C	1		
60	-		hose	1		see illustration 00/121-50

1 = Packaged quantities 2 = Restricted availability 3 = Parts being phased out 4 = not available individually 5 = see separate list

https://truckmanualshub.com/

FUEL SYSTEM DIESEL ENGINE

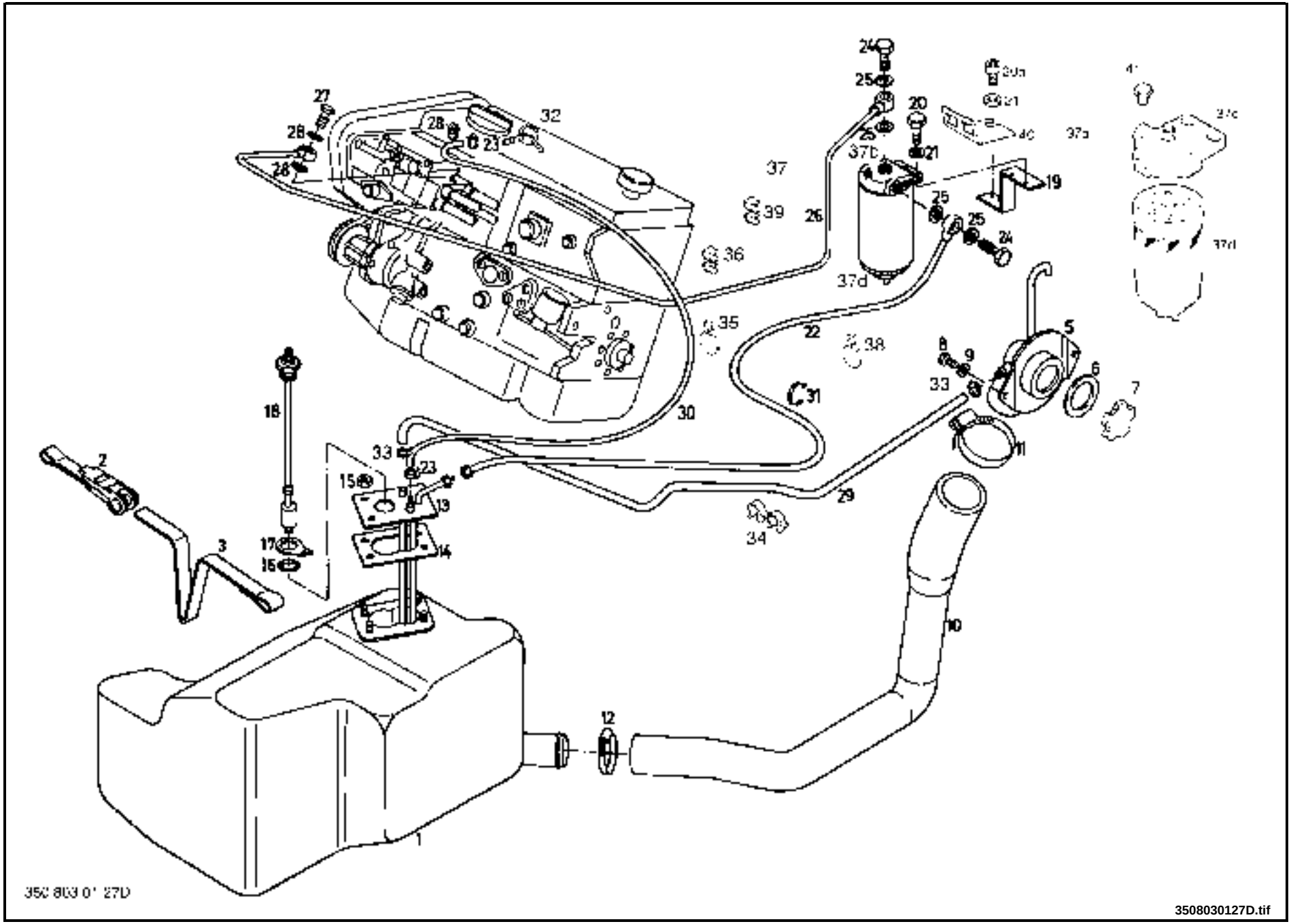

https://truckmanualshub.com/

Pos.	Part-No.	I	Designation	Qantity	replaced by	Remarks
1	350 571 01 05		fuel tank	1		
2	000 930 01 28		strap tightening assy.	1		
3	000 937 01 14		strap tightening 1.2X25X20X1050	1		
5	350 570 20 00		plug neck assy.	1		
6	000 964 21 32		washer shim disc	1		
7	000 918 46 01		locking cover	1		
8	9 008 311 180	1	hexagon head screw ISO 4017 M8x20-8.8-A2C	2		
9	9 308 003 018	1	washer ISO 7093-1 8-200HV-A2C	2		
10	350 574 40 00		formed hose	1		
	000 955 20 62		clip hose DIN 3017 A50-70x13-W2	1		
11	000 955 20 39	1	clip hose DIN 3017 A60-80x13-W2	1		
12	000 955 20 60	1	clip hose DIN 3017 A32-50x13-W2	1		
13	350 570 52 12		fuel line assy.	1		
13	350 570 52 02		fuel line assy.	1		particle filter
14	000 961 04 19		gasket	1		
15	9 210 281 070	1	hexagon nut ISO 4032 M5-8-A2C	4		
16	000 963 22 05	1	o ring	1		
17	000 975 19 02		contact plate	1		
18	000 973 12 11		fuel signal transmitter	1		
19	350 570 15 01	3	support assy.	1	350 570 15 07	
19	350 570 15 07		support assy.	1		
20	9 008 311 241	1	hexagon head screw ISO 4017 M10x30-8.8-A2C	2		=>|C1X350N00052 12/2003|=>
20	9 048 316 241	1	socket-head screw DIN 7984 7984-M10x30-8.8A2C	2		C1x350N00053|=> =>|12/2002
20a	9 048 316 234	1	socket-head screw DIN 7984 7984-M10x16-8.8A2C	2		
21	9 291 003 020	1	washer DIN 125 B10,5x20x2-HV200-A2C	2		
22	000 957 40 65		hoseline	1		
	000 963 20 36	1	o-ring 7,5x1,5-v80	1		to pos. 22

1 = Packaged quantities 2 = Restricted availability 3 = Parts being phased out 4 = not available individually 5 = see separate list

https://truckmanualshub.com/

FUEL SYSTEM DIESEL ENGINE

Pos.	Part-No.	I	Designation	Qantity	replaced by	Remarks
23	000 955 21 16		clip	2		
24	9 170 281 080	1	banjo union DIN 7643	2		
25	000 962 04 37	1	seal ring 14x22x1,5-V80	4		
26	000 957 00 02		hoseline	1		
27	9 170 281 060	1	bolt banjo DIN 7643 8-7643ST-A3C	1		
28	000 962 04 36	1	seal 12x19x1,5-V80	4		
29	350 574 40 10		formed hose	1		
30	000 957 00 01		hose DIN 73379	1		
31	-		tie cable	1		
32	000 954 12 09		union, banjo	1		
33	000 955 20 09		clip hose DIN 3017 A16-27x9-W2	2		
34	000 950 22 40		clip fastening assy. A3+A4/23,5-	2		
35	000 950 22 35		clip fastening assy.	2		
36	000 950 22 72		clip fastening assy. A3+A4/11-16	1		
36	000 950 22 03		clip assy.	1		
37	000 983 05 03	3	filter fuel	1	000 983 05 09	=>|C1x350T00156 = pos. 37b+37d including: 1x 350.570.15.07 1x 000.952.40.26
37a	000 983 05 09		filter	1		C1x350T00157|=> = pos. 37c+37d
37b	-		filter top	1		
37c	-		filter top	1		
37d	000 983 16 25	3	filter	1	000 983 16 47	04/2006|=> optionally
37d	000 983 16 47		filter insert	1		optionally
38	000 950 22 18		clip assy.	1		06/2003 |=>
39	000 955 05 11		clip fastening	1		06/2003 |=>

1 = Packaged quantities 2 = Restricted availability 3 = Parts being phased out 4 = not available individually 5 = see separate list

https://truckmanualshub.com/

Pos.	Part-No.	I	Designation	Qantity	replaced by	Remarks
40	**350 363 14 38**		**support**	**1**		**09/2002|=>** **particle filter**
41	**000 952 40 26**		**screw plug M14x1,5**	**1**		**C1x350T00157|=>**

1 = Packaged quantities **2 = Restricted availability** **3 = Parts being phased out** **4 = not available individually** **5 = see separate list**

https://truckmanualshub.com/

WATER SEPARATOR DIESEL ENGINE C1X350N00053 |=>

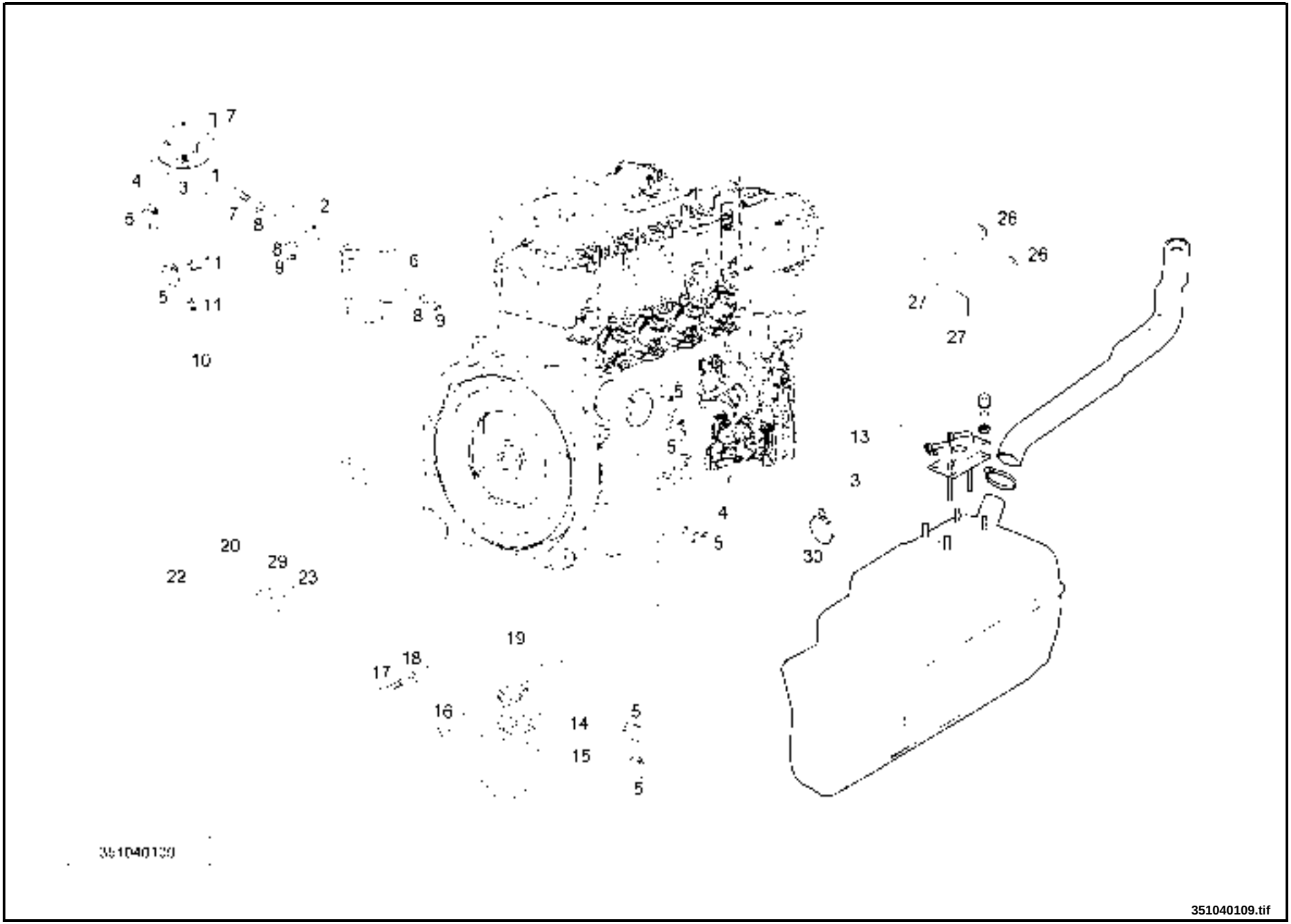

https://truckmanualshub.com/

WATER SEPARATOR DIESEL ENGINE C1X350N00053 |=>

Pos.	Part-No.	I	Designation	Qantity	replaced by	Remarks
1	000 980 11 02		pre-cleaner assy.	1		for LX
	000 983 10 02		pre-cleaner	1		to pos. 1
	000 983 85 01		housing filter	1		to pos. 1
	7 9174 15 509		sensor	1		to pos. 1
2	350 570 15 05		*****	1		
3	350 574 15 06		*****	1		
4	350 574 15 04		*****	1		
5	000 955 20 89		clip hose DIN 3017 A8-12x9-W2-1	2		
6	9 008 311 183		hexagon head screw ISO 4017 M8x25-8.8-A2C	2		
7	9 292 003 018	1	washer DIN 125 DIN 125-A8,4x16x1,6-A2C	2		
8	9 060 145 066	1	screw csk hd DIN 965 M4X12-965-4.8A2R	2		
9	351 381 04 14		*****	1		
10	7 9125 03 811		tab housing 2-polig	1		to pos. 9
11	7 9125 03 753		tab 0,5-1,0	2		to pos. 9
12	7 9149 99 019		seal 0,35-1	2		to pos. 9
13	000 957 17 65		hose line	2		to pos. 9
14	7 9125 11 315		connecting bush DIN 46340	5		to pos. 9
15	7 9125 00 260		cable shoe DIN 46225	1		to pos. 9
16	000 974 15 24		light indicator 12V	1		
17	000 938 35 18		symbol insert HZ/WRN,RED,SF U	2		
18	351 574 15 13		*****	1		
19	000 931 39 00		clamp 19x24/4	2		
	7 9125 03 121		plug housing 2 way	1		
	002 978 05 11		contact JPT-0,5-1	2		
	000 955 30 68		cable tie 4.6x205	1		
	000 955 23 03		adhesive base 35X25-black	1		
	7 3780 00 021		adhesive string (mtr)(1 roll = 6m) 8	1		

1 = Packaged quantities 2 = Restricted availability 3 = Parts being phased out 4 = not available individually 5 = see separate list

https://truckmanualshub.com/

WATER SEPARATOR DIESEL ENGINE C1X350N00053 |=>

Pos.	Part-No.	I	Designation	Qantity	replaced by	Remarks
	000 950 22 63		**clip fastening assy.**	**1**		

1 = Packaged quantities **2 = Restricted availability** **3 = Parts being phased out** **4 = not available individually** **5 = see separate list**

https://truckmanualshub.com/

https://truckmanualshub.com/

EXHAUST SYSTEM

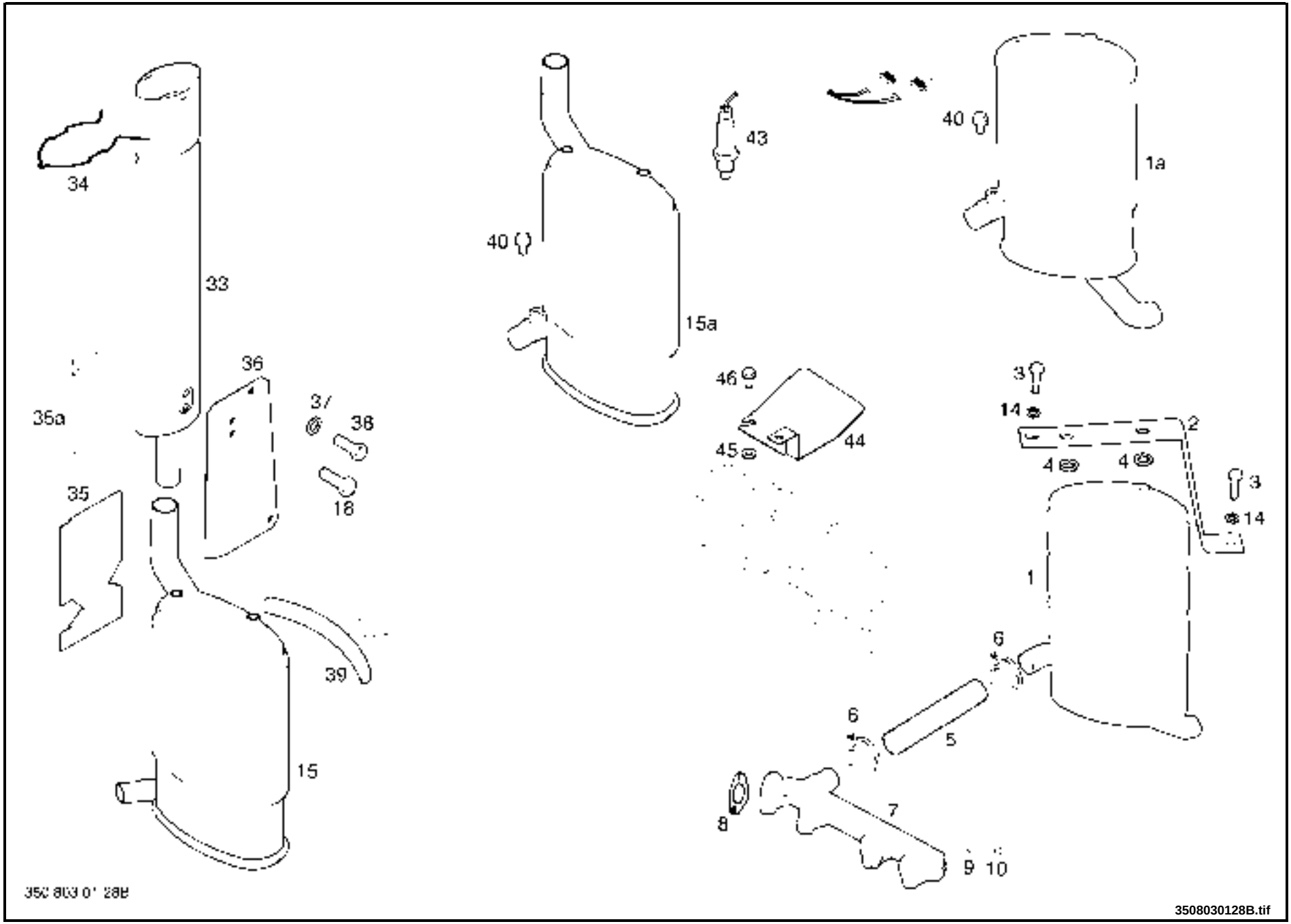

https://truckmanualshub.com/

EXHAUST SYSTEM

Pos.	Part-No.	I	Designation	Qantity	replaced by	Remarks
1	350 581 01 12		main silencer	1		diesel H12-H18
1	350 581 01 19		silencer	1		diesel H20,H20-600C
1a	350 586 01 06		catalyzer	1		diesel catalyzer ungoverned H12-H18
1a	350 586 01 14		catalyzer	1		diesel catalyzer ungoverned H20,H20-600C
1a	350 586 01 00		silencer	1		LPG catalyzer ungoverned H12-H18
1a	350 586 01 11		catalyser	1		LPG catalyzer ungoverned H20,H20-600C
1a	350 586 01 05		silencer	1		LPG catalyzer governed H12-H18
1a	350 586 01 12		catalyzer	1		LPG catalyzer governed H20,H20-600C
2	350 582 14 00		angle	1		
3	9 007 311 306	1	hexagon head bolt ISO 4014 M12x50-8.8-A2C	2		
4	9 295 003 031	1	washer DIN 434 22x40x44-A2R	2		
5	000 957 50 04		corrugated hose	1	000 957 50 69	
5	000 957 50 69		*****	1		
6	000 955 22 83		pipe clip 43,5-M8-W1	2		
7	350 172 02 15		exhaust manifold without hose	1		
8	000 961 10 93		seal	4		
9	9 294 003 018	1	washer DIN 433 DIN 433-8,4-ST50-A2C	8		
10	9 214 335 110	1	nut ISO 7042 M8-8-C2P	8		
14	9 291 003 022	1	washer DIN 125 B12-HV200-A2C	2		
15	350 581 01 18		silencer	1		Diesel
15a	350 586 01 09		silencer	1		diesel, catalyzer ungoverned
15a	350 586 01 08		silencer	1		LPG , catalyzer ungoverned
15a	350 586 01 10		silencer	1		LPG, governed catalyzer
18	9 008 311 177	1	hexagon head screw ISO 4017 M8x16-8.8-A2C	2		

1 = Packaged quantities 2 = Restricted availability 3 = Parts being phased out 4 = not available individually 5 = see separate list

https://truckmanualshub.com/

EXHAUST SYSTEM

Pos.	Part-No.	I	Designation	Qantity	replaced by	Remarks
33	350 581 01 06		silencer	1		
34	350 436 35 10		support	1		
35	000 964 84 05	3	plate insulating	1	000 964 84 06	
35a	000 964 84 06		insulator	1		
36	350 436 28 30		sheet cover	1		
37	9 309 412 014	1	washer DIN 7349 DIN 7349-6,4x17x3A2C	2		
38	9 008 311 128	1	hexagon head screw ISO 4017 M6x16-8.8-A2C	2		
39	350 432 03 00		mat	1		
40	9 148 600 176		screw plug WN 14140	1		
43	7 9190 95 257		sensor	1		
44	350 436 28 01		cover sheet	1		
45	9 309 412 014	1	washer DIN 7349 DIN 7349-6,4x17x3A2C	1		
46	9 008 610 132	1	hexagon head screw DIN 7500 DEM6x20-ST-A3B	1		

1 = Packaged quantities 2 = Restricted availability 3 = Parts being phased out 4 = not available individually 5 = see separate list

https://truckmanualshub.com/

https://truckmanualshub.com/

LPG SYSTEM

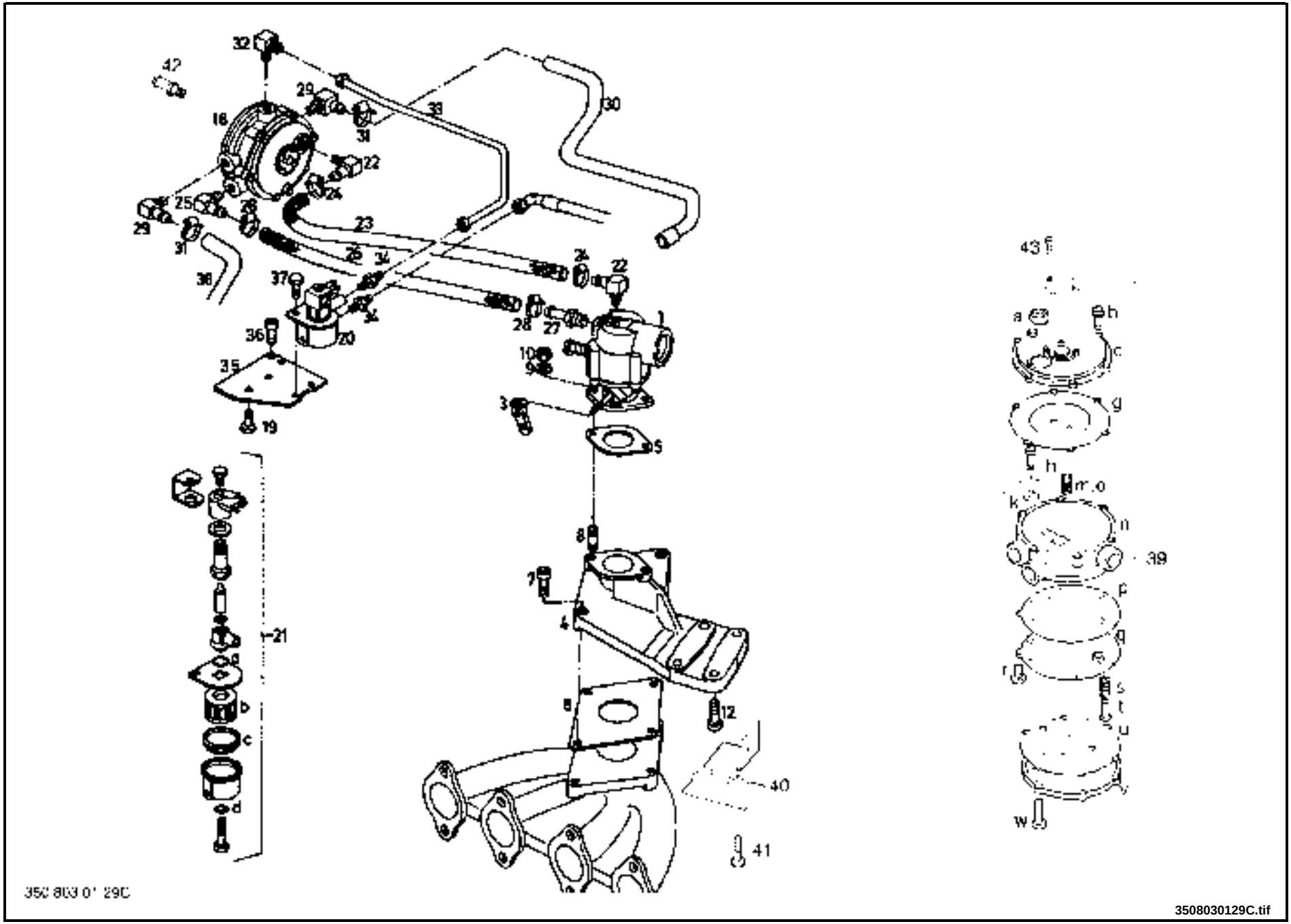

https://truckmanualshub.com/

Pos.	Part-No.	I	Designation	Qantity	replaced by	Remarks
1	350 572 14 02		mixer assembly	1		
3	350 572 29 01		lever	1		
4	350 171 11 00		intermediate flange	1		
5	000 961 51 26		seal gasket.	1		
6	350 179 00 00		seal	1		
7	9 045 311 138	1	screw cap hd ISO 4762 M6X35-8.8	4		
8	9 124 311 180	1	stud DIN 939	2		
9	9 294 003 018	1	washer DIN 433 DIN 433-8,4-ST50-A2C	2		
10	9 210 281 110	1	nut ISO 4032 934-M8-8A2C	2		
12	9 045 311 177	1	socket-head screw ISO 4762 M8x16-8.8-A2C	2		
18	351 572 20 00		pressure regulator	1		
20	350 572 18 01		shut off valve	1		
21	000 983 16 23		filter part	1		= pos. 21 a-d
21a	-		o-ring	1		
21b	-		FUEL FILTER ELEMENT	1		
21c	-		SEALANT	1		
21d	-		o-ring	1		
22	000 956 01 09		pipe union 1/8NPT-3/8"/90°-Nyl	2		
23	000 964 14 47	3	hose vacuum	1	000 964 15 22	
23	000 964 15 22		hose	1		
24	000 955 50 00		clip	2		
25	000 951 55 12		coupling	1		
26	000 957 18 26		hose	1		
27	000 951 54 27		coupling	1		
28	000 955 50 01		clip	2		
29	000 956 01 06		pipe union 3/8NPT-5/8"/90°-Nyl	2		
30	350 108 20 41		formed hose	1		

1 = Packaged quantities 2 = Restricted availability 3 = Parts being phased out 4 = not available individually 5 = see separate list

https://truckmanualshub.com/

LPG SYSTEM

Pos.	Part-No.	I	Designation	Qantity	replaced by	Remarks
31	000 955 20 36		clip hose DIN 3017 A20-32x13-W2	2		
32	000 951 55 14	1	threaded pipe angle	1		
33	350 570 52 13		pipe assy.	1		
34	000 951 22 86		reduction nipple	2		
35	350 571 14 04		plate	1		
36	9 048 316 234	1	socket-head screw DIN 7984 7984-M10x16-8.8A2C	2		
37	9 008 311 132	1	hexagon head screw ISO 4017 M6x20-8.8-A2C	2		
38	350 108 20 36	3	formed flexible tube	1	350 108 20 09	
38	350 108 20 09		hose	1		
39	352 572 90 20		repair kit	1		= pos. 39b,g,k,o,p,s,t,u,w for 351.572.20.00
39b	000 901 90 12		screw	6		
39c	----------	4	cover	1		
39g	----------	4	membrane	1		
39h	350 572 29 00		lever	1		
39i	000 901 90 18		screw 8/32x1/2-Tx	1		
39j	000 908 10 01		pin	1		
39k	----------	4	fixture holding	1		
39m	----------	4	housing	1		
39n	----------	4	housing	1		
39o	----------	4	housing	1		
39p	----------	4	seal	1		
39q	----------	4	plate	1		
39r	000 962 01 31		pipe plug 1/8"-27-NPTF	1		
39s	----------	4	compression spring	1		
39t	----------	4	bolt	1		
39u	----------	4	membrane	1		

1 = Packaged quantities 2 = Restricted availability 3 = Parts being phased out 4 = not available individually 5 = see separate list

https://truckmanualshub.com/

Pos.	Part-No.	I	Designation	Qantity	replaced by	Remarks
39v	----------	4	cover	1		
39w	000 901 90 13		socket-head screw 8-32x1"	7		
	350 380 95 00		repair kit	1		
	350 381 03 53		harness	1		350.380.95.00
	7 9162 99 055		relay	1		350.380.95.00
	9 008 610 096		hexagon head screw DIN 7500 DEM5x12-ST-A3B	1		350.380.95.00
	000 955 30 30		tie cable 6,3x4,8x198-SW	5	000 955 30 68	350.380.95.00
	000 955 30 68		cable tie 4.6x205	5		
40	350 360 60 16		support assy.	1		
41	9 045 316 186	1	socket-head screw ISO 4762 M8x30-8.8-A2C	2		
42	000 944 09 01		pressure relief valve	1		02/2002 |=>
43	000 901 90 64		screw 6-32x5/16"	2		=>|06/2007

1 = Packaged quantities 2 = Restricted availability 3 = Parts being phased out 4 = not available individually 5 = see separate list

https://truckmanualshub.com/

LPG SYSTEM (CATALYZER GOVERNED)

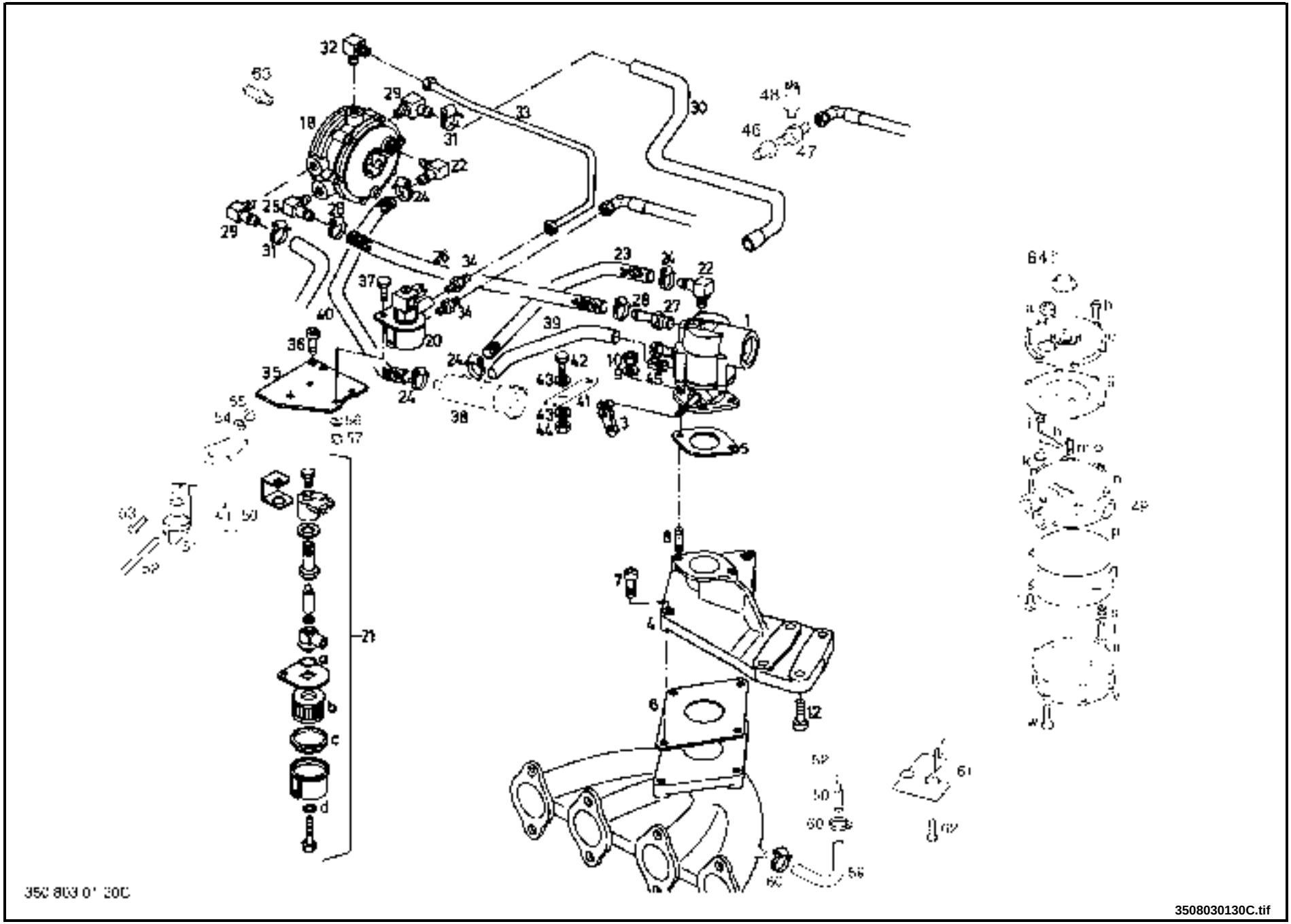

https://truckmanualshub.com/

LPG SYSTEM (CATALYZER GOVERNED)

Pos.	Part-No.	I	Designation	Qantity	replaced by	Remarks
1	350 572 14 03		mixing device	1		
3	350 572 29 01		lever	1		
4	350 171 11 00		intermediate flange	1		
5	000 961 51 26		seal gasket.	1		
6	350 179 00 00		seal	1		
7	9 045 311 138	1	screw cap hd ISO 4762 M6X35-8.8	4		
8	9 124 311 180	1	stud DIN 939	2		
9	9 294 003 018	1	washer DIN 433 DIN 433-8,4-ST50-A2C	2		
10	9 210 281 110	1	nut ISO 4032 934-M8-8A2C	2		
12	9 045 311 177	1	socket-head screw ISO 4762 M8x16-8.8-A2C	2		
18	351 572 20 00		pressure regulator	1		
20	350 572 18 01		shut off valve	1		
21	000 983 16 23		filter part	1		= pos. 21 a-d
21a	-		o-ring	1		
21b	-		FUEL FILTER ELEMENT	1		
21c	-		SEALANT	1		
21d	-		o-ring	1		
22	000 956 01 09		pipe union 1/8NPT-3/8"/90°-Nyl	2		
23	000 964 14 22		hose flexible formed	1		
24	000 955 50 00		clip	4		
25	000 951 55 12		coupling	1		
26	000 957 18 26		hose	1		
27	000 951 54 27		coupling	1		
28	000 955 50 01		clip	2		
29	000 956 01 06		pipe union 3/8NPT-5/8"/90°-Nyl	2		
30	350 108 20 41		formed hose	1		
31	000 955 20 36		clip hose DIN 3017 A20-32x13-W2	2		

1 = Packaged quantities 2 = Restricted availability 3 = Parts being phased out 4 = not available individually 5 = see separate list

https://truckmanualshub.com/

LPG SYSTEM (CATALYZER GOVERNED)

Pos.	Part-No.	I	Designation	Qantity	replaced by	Remarks
32	000 951 55 14	1	threaded pipe angle	1		
33	350 570 52 13		pipe assy.	1		
34	000 951 22 86		reduction nipple	2		
35	350 571 14 04		plate	1		
36	9 048 316 234	1	socket-head screw DIN 7984 7984-M10x16-8.8A2C	2		
37	9 008 311 132	1	hexagon head screw ISO 4017 M6x20-8.8-A2C	2		
38	350 572 22 02		piston	1		
39	000 964 14 56		hose 7/32"x90mm	1		
40	000 964 14 61		hose	1		
41	350 172 10 01		support	1		
42	9 008 311 128	1	hexagon head screw ISO 4017 M6x16-8.8-A2C	1		
43	9 292 003 014	1	washer ISO 7089 A6,4-ST50-A2C	2		
44	9 210 281 090	1	hexagon nut ISO 4032 DIN 934-M6-8A2C	1		
45	000 956 03 04		nipple 1/4UNF	1		
46	000 951 22 95		adaptor	1		
47	000 951 33 09		t piece	1		
48	7 9154 91 007	3	switch pressure (low fuel indicator)	1	7 9154 91 014	residual flow indicator
48	7 9154 91 014		pressure switch	1		residual flow indicator
49	352 572 90 20		repair kit	1		= pos. 49b,g,k,o,p,s,t,u,w for 351.572.20.00
49b	000 901 90 12		screw	6		
49c	----------	4	cover	1		
49g	----------	4	membrane	1		
49h	350 572 29 00		lever	1		
49i	000 901 90 18		screw 8/32x1/2-Tx	1		
49j	000 908 10 01		pin	1		
49k	----------	4	fixture holding	1		

1 = Packaged quantities 2 = Restricted availability 3 = Parts being phased out 4 = not available individually 5 = see separate list

https://truckmanualshub.com/

Pos.	Part-No.	I	Designation	Qantity	replaced by	Remarks
49m	----------	4	housing	1		
49n	----------	4	housing	1		
49o	----------	4	housing	1		
49p	----------	4	seal	1		
49q	----------	4	plate	1		
49r	000 962 01 31		pipe plug 1/8"-27-NPTF	1		
49s	----------	4	compression spring	1		
49t	----------	4	bolt	1		
49u	----------	4	membrane	1		
49v	----------	4	cover	1		
49w	000 901 90 13		socket-head screw 8-32x1"	7		
50	350 363 42 11		support	1		
51	000 973 29 31		switch	1		
52	000 964 14 27		hose vacuum	1		
53	9 008 311 095	1	hexagon head screw ISO 4017 M5x10-8.8-A2C	2		
54	9 292 003 012	1	washer ISO 7089 A5,3-ST-A2C	2		
55	9 210 281 070	1	hexagon nut ISO 4032 M5-8-A2C	2		
56	9 292 003 014	1	washer ISO 7089 A6,4-ST50-A2C	2		
57	9 210 281 090	1	hexagon nut ISO 4032 DIN 934-M6-8A2C	2		
58	000 964 46 50		differ.pieces	1		
59	351 108 20 17		hose formed	1		when re-work is done 350.808.23.35
60	000 955 50 01		clip	2		
61	350 360 60 16		support assy.	1		
62	9 045 316 186		socket-head screw ISO 4762 M8x30-8.8-A2C	2		
63	000 944 09 01		pressure relief valve	1		02/2002 |=>
64	000 901 90 64	1	screw 6-32x5/16"	1		06/2007
	7 9160 40 000		fuse DIN 72581 1A	1		

1 = Packaged quantities 2 = Restricted availability 3 = Parts being phased out 4 = not available individually 5 = see separate list

https://truckmanualshub.com/

LPG SYSTEM (CATALYZER GOVERNED)

Pos.	Part-No.	I	Designation	Qantity	replaced by	Remarks
	7 9190 86 803		fuse element DIN 72581 C5-32V	1		
	350 380 95 00		repair kit	1		
	350 381 03 53		harness	1		
	7 9162 99 055		relay	1		
	9 008 610 096		hexagon head screw DIN 7500 DEM5x12-ST-A3B	1		
	000 955 30 30	3	tie cable 6,3x4,8x198-SW	5	000 955 30 68	
	000 955 30 68		cable tie 4.6x205	5		

1 = Packaged quantities 2 = Restricted availability 3 = Parts being phased out 4 = not available individually 5 = see separate list

https://truckmanualshub.com/

https://truckmanualshub.com/

LPG TANK

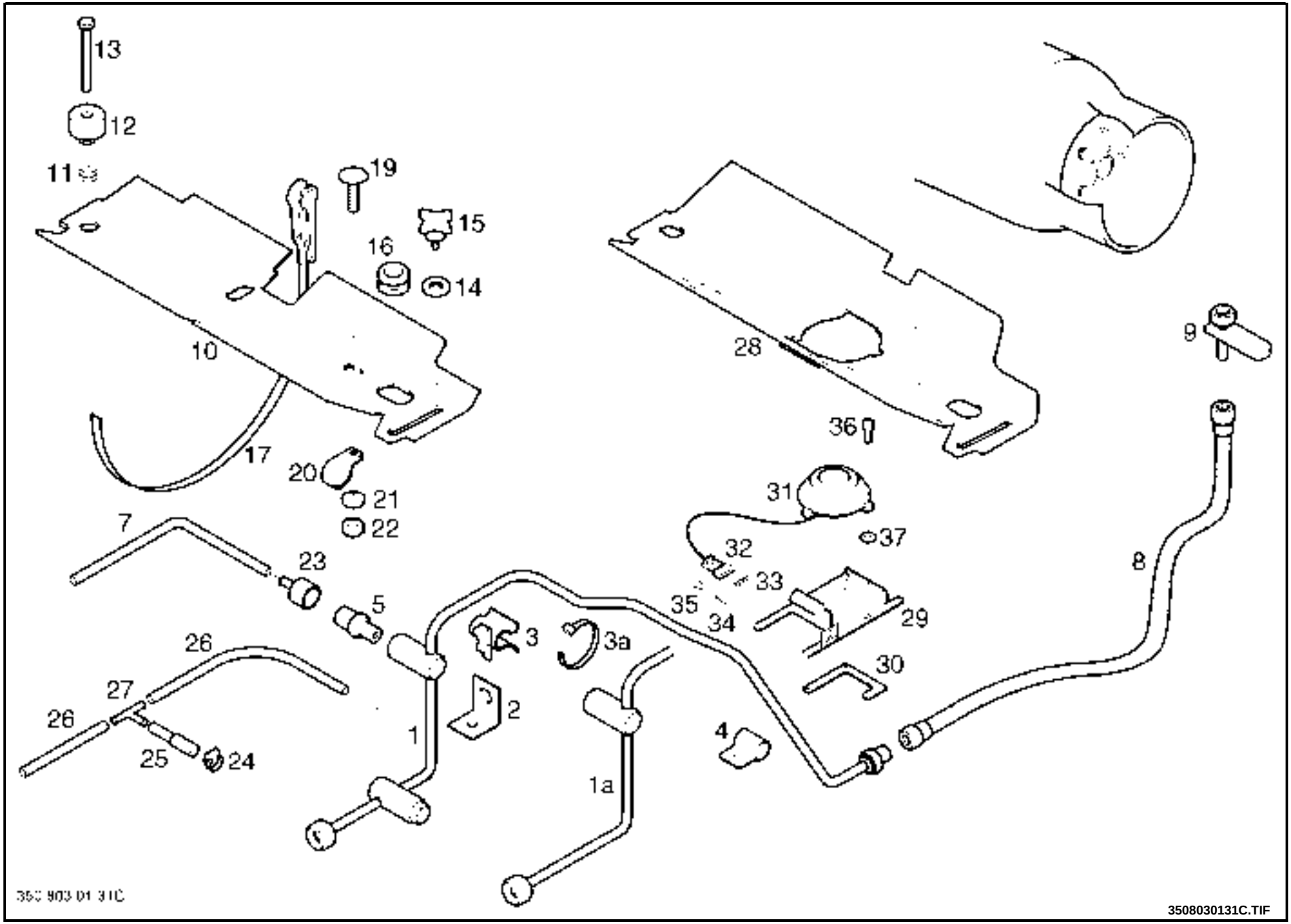

https://truckmanualshub.com/

LPG TANK

Pos.	Part-No.	I	Designation	Qantity	replaced by	Remarks
1	350 574 10 02		pipe	1		
	7 9154 91 007	3	switch pressure (low fuel indicator)	1	7 9154 91 014	residual flow indicator
	7 9154 91 014		pressure switch	1		residual flow indicator
1a	350 574 10 03		pipe	1		
2	000 931 73 15	3	angle	1	351 363 42 08	including: 1x 000.955.30.74
2	351 363 42 08		angle	1		
3	000 931 40 20		clamp	1		=>| 06/2006
3a	000 955 30 74		tie cable 4,6x1,2x200-PA6.6	1		07/2006 |=>
4	000 955 22 58		clip support DIN 3016-1 D1-10x20-W1-1	1		
5	000 944 15 06		over pressure valve.	1	000 944 13 57	Loctite nr. 5331 including: 1x 000.964.38.01
5	000 944 13 57		high-pressure relief valve	1		Loctite nr. 5331
7	351 574 40 05		hose vacuum 4x8x480	1		=>| 01/2002
	000 964 46 49		support	1		for pos. 7
8	000 957 30 92	3	hose high pressure	1	000 957 60 14	
8	000 957 60 14		hose line	1		
9	000 956 90 03		nipple	1		
	000 961 02 01		seal ring	1		to pos. 9
10	350 571 10 04		support assembly	1		
10a	350 570 11 26		console assy.	1		320 mm LPG tank ultra sound sensor residual flow indicator
11	9 487 648 161	1	disc spring DIN 2093 B45	2		
12	000 916 50 00		collar liner	1		
13	9 007 311 248	1	hexagon head bolt ISO 4014 M10x60-8.8-A2C	1		
14	9 309 412 020	1	washer DIN 7349 DIN 7349-10,5x25x4	1		
15	9 575 931 454		handle crosstype DIN 6335 L50x35-PF31	1		

1 = Packaged quantities 2 = Restricted availability 3 = Parts being phased out 4 = not available individually 5 = see separate list

https://truckmanualshub.com/

LPG TANK

Pos.	Part-No.	I	Designation	Qantity	replaced by	Remarks
16	000 964 03 27		cable shipper	1		
17	000 930 01 13	3	strap tightening assy.	1	000 937 02 34	
17	000 937 02 34		tightening strap	1		
19	9 027 311 183	1	screw DIN 603 M8X25-603-8.8-A2C	1		
20	000 955 22 39		clip DIN 3016-1 D1-48x20-W1-1	1		
21	9 309 412 018	1	washer DIN 7349 DIN 7349-8.4x21x4,8A2C	1		
22	9 210 281 110	1	nut ISO 4032 934-M8-8A2C	1		
23	000 964 46 49		support	1		=>| 08/2003 Loctite nr. 648
23	000 964 38 01		cap	1		09/2003 |=> Loctite nr. 648
24	000 955 50 00		clip	1		02/2002 |=>
25	350 574 40 11		hose flexible formed	1		02/2002 |=>
26	000 964 15 56		hose D 4x220	2		02/2002 |=>
	000 955 01 58		clip cable	1		to pos. 26
27	000 951 33 13		tee piece	1		02/2002 |=>
28	350 570 11 23		console assy.	1		version ultra sound sensor
29	350 570 11 14		console assy.	1		version ultra sound sensor
29	350 571 10 30		console	1		320 mm LPG tank ultra sound sensor residual flow indicator
30	392 571 20 47		support	1		version ultra sound sensor
31	7 9174 15 518	3	sensor	1	7 9174 15 613	version ultra sound sensor
31	7 9174 15 613		sensor	1		version ultra sound sensor
32	7 9125 03 122		tab housing 4 way	1		version ultra sound sensor
33	7 9149 99 022		seal 4 way	1		version ultra sound sensor
34	7 9125 03 753		tab 0,5-1,0	a.req.		version ultra sound sensor
35	7 9149 99 019		seal 0,35-1	a.req.		version ultra sound sensor

1 = Packaged quantities 2 = Restricted availability 3 = Parts being phased out 4 = not available individually 5 = see separate list

https://truckmanualshub.com/

Pos.	Part-No.	I	Designation	Qantity	replaced by	Remarks
36	9 045 311 135		socket-head screw ISO 4762 M6x25-8.8-A2C	3		Loctite nr. 243 version ultra sound sensor
36	9 045 316 132		socket-head screw ISO 4762 M6x20-8.8-A2C	3		Loctite nr. 243 320 mm LPG tank ultra sound sensor residual flow indicator
37	9 309 412 014		washer DIN 7349 DIN 7349-6,4x17x3A2C	3		version ultra sound sensor
38	000 901 15 00		screw	1		
39	9 291 003 031		washer DIN 125 B19-ST50-A2C	1		
40	000 921 90 04		spring compression	1		
41	000 916 50 02		collar bush	1		
42	9 007 311 256		hexagon head bolt ISO 4014 M10x100-8.8-A2C	1		
43	350 571 23 00		plate joining	2		
44	9 309 412 014		washer DIN 7349 DIN 7349-6,4x17x3A2C	4		
45	9 210 281 090		hexagon nut ISO 4032 DIN 934-M6-8A2C	2		
46	9 008 311 132		hexagon head screw ISO 4017 M6x20-8.8-A2C	2		
47	000 955 22 61		clip DIN 3016-1 D1-35x20-W1-1	1		
48	353 363 14 68		support	1		320 mm LPG tank ultra sound sensor residual flow indicator
49	9 210 281 110		nut ISO 4032 934-M8-8A2C	1		
50	9 027 311 183		screw DIN 603 M8X25-603-8.8-A2C	1		
51	200 132 03 20		handlebar	1		
52	000 905 30 00		nut	1		
53	000 916 09 08		bush	1		
54	000 901 01 65		screw	1		
55	200 351 32 00		clamp hub	1		
56	000 951 55 14		threaded pipe angle	1		320 mm LPG tank ultra sound sensor residual flow indicator

1 = Packaged quantities 2 = Restricted availability 3 = Parts being phased out 4 = not available individually 5 = see separate list

https://truckmanualshub.com/

LPG TANK

Pos.	Part-No.	I	Designation	Qantity	replaced by	Remarks
57	000 951 64 04		screw coupling 1 1/4"ACME-1/4"NPT	1		320 mm LPG tank ultra sound sensor residual flow indicator Loctite nr. 5331
58	9 045 316 096		socket-head screw ISO 4762 M5x12-8.8-A2C	2		
59	9 292 003 012		washer ISO 7089 A5,3-ST-A2C	4		
60	9 210 281 070		hexagon nut ISO 4032 M5-8-A2C	2		

1 = Packaged quantities 2 = Restricted availability 3 = Parts being phased out 4 = not available individually 5 = see separate list

https://truckmanualshub.com/

https://truckmanualshub.com/

GUARD DUST - FILTER PRELIMINARY INSTALLAT.

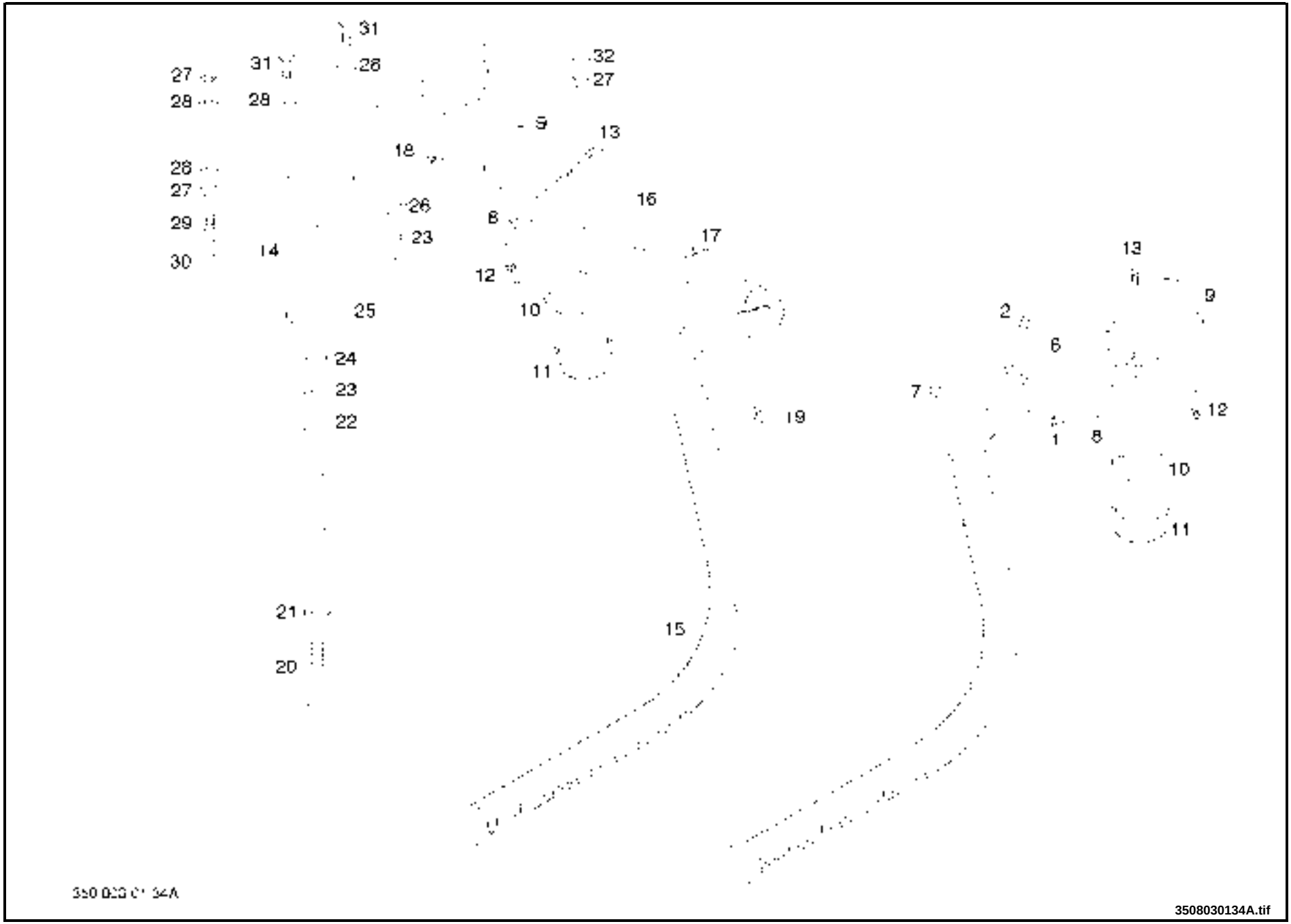

https://truckmanualshub.com/

GUARD DUST - FILTER PRELIMINARY INSTALLAT.

Pos.	Part-No.	I	Designation	Qantity	replaced by	Remarks
1	9 113 604 495	1	tapping screw ISO 7049	1		
2	9 087 101 178	1	screw ISO 7045 DIN 7985-M8X16-4.8A2R	2		
6	000 950 17 10		elbow pipe assy.	1		
7	9 214 317 110	1	hexagon nut ISO 7042 M8-8-A2C	2		
8	9 222 057 110	1	nut DIN 557	1		
9	000 983 20 30		pre-cleaner	1		Pos. 8-13
10	000 983 83 09		funnel	1		
11	000 983 83 01		filter bowl glass	1		
12	000 983 94 52		fastener	2		
13	000 983 87 09		locking screw	1		
14	350 363 25 09		plate	1		version driver's cab
15	000 962 60 03		hose corrugated	1		version driver's cab
16	350 173 11 04		pipe	1		
17	000 955 20 34		clip hose DIN 3017 A40-60x13-W2	1		
18	000 955 50 15		clip	1		
19	000 964 13 56		edge protection 13,5x120An	1		
20	9 007 311 316	1	hexagon head bolt ISO 4014 M12x100-8.8-A2C	1		
21	9 311 003 022	1	washer DIN 6340 DIN 6340-13	1		
22	000 964 03 35		grommet cable 20/12X4	1		
23	9 291 003 022	1	washer DIN 125 B12-HV200-A2C	2		
24	9 208 281 140	1	hexagon nut ISO 4035 DIN 439-BM12-6A2C	1		
25	9 311 600 046	1	washer DIN 6340 DIN 6340-31xA2C	1		
26	9 210 281 140	1	hexagon nut ISO 4032 DIN 934-M12-8A2C	1		
27	9 210 281 110	1	nut ISO 4032 934-M8-8A2C	6		
28	9 292 003 018	1	washer DIN 125 DIN 125-A8,4x16x1,6-A2C	6		
29	9 008 311 186	1	hexagon head screw ISO 4017 M8x30-8.8-A2C	2		
30	000 964 37 09		cover. hex head protective - sw13	2		

1 = Packaged quantities 2 = Restricted availability 3 = Parts being phased out 4 = not available individually 5 = see separate list

https://truckmanualshub.com/

GUARD DUST - FILTER PRELIMINARY INSTALLAT.

Pos.	Part-No.	I	Designation	Qantity	replaced by	Remarks
31	9 008 311 183	1	hexagon head screw ISO 4017 M8x25-8.8-A2C	2		
32	9 309 412 018	1	washer DIN 7349 DIN 7349-8.4x21x4,8A2C	2		

1 = Packaged quantities 2 = Restricted availability 3 = Parts being phased out 4 = not available individually 5 = see separate list

https://truckmanualshub.com/

https://truckmanualshub.com/

PARTICLE FILTER SYSTEM =>I 08/2002

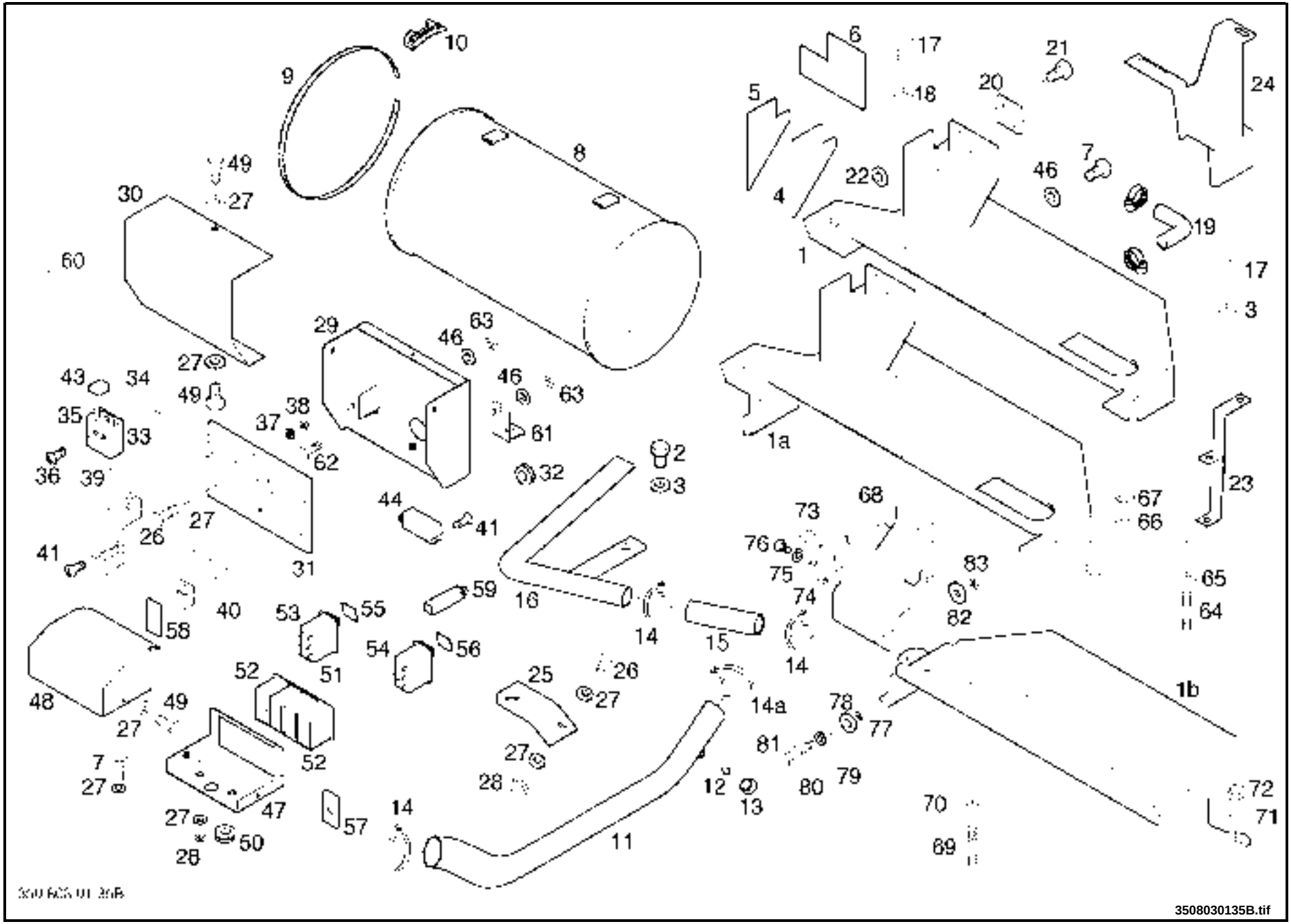

https://truckmanualshub.com/

PARTICLE FILTER SYSTEM =>I 08/2002

Pos.	Part-No.	I	Designation	Qantity	replaced by	Remarks
1	350 580 35 04		support assy.	1		=>|05/2001
1b	350 580 35 06		console assy.	1		06/2001|=>
2	9 008 311 298	1	hexagon head screw ISO 4017 M12x30-8.8-A2C	1		
3	9 291 003 022	1	washer DIN 125 B12-HV200-A2C	1		
4	000 964 65 39		plate insulating	1		=>|05/2001
5	000 964 65 40		plate insulating	1		=>|05/2001
6	000 964 65 38		plate insulating	1		
7	9 008 311 132	1	hexagon head screw ISO 4017 M6x20-8.8-A2C	5		
8	350 586 18 00		insulation	1		
9	000 937 01 22		tightening strap	3		
10	000 983 99 28		cocking lever	3		
11	350 580 06 06		exhaust pipe assy.	1		
12	000 954 20 01		locking pin	1		
13	000 952 01 04		nut DIN 3870 6-L-A3C	1		
14	000 955 22 83		pipe clip 43,5-M8-W1	3		
14a	000 955 22 85		clip pipe 45-M8-W1	1		
15	000 957 50 36	3	corrugated hose	1	000 957 50 71	
15	000 957 50 71		corrugated hose 40x279	1		
16	350 580 01 13		pipe assy.	1		H12-18D
16	350 580 01 02		exhaust pipe assy.	1		H20D
17	9 090 313 243	1	button head screw ISO 7380 M10x35-8.8-A2C	1		=>|05/2001
18	9 309 412 020	1	washer DIN 7349 DIN 7349-10,5x25x4	1		=>|05/2001
19	000 964 14 14		manifold	1		
20	000 918 56 21		strap	1		
21	9 008 311 068	1	hexagon head screw ISO 4017 M4x16-8.8-A2C	2		
22	9 292 003 010	1	washer DIN 125 A4.3x9x0.8-125-A2C	2		
23	350 360 60 06		support assy.	1		

1 = Packaged quantities 2 = Restricted availability 3 = Parts being phased out 4 = not available individually 5 = see separate list

https://truckmanualshub.com/

PARTICLE FILTER SYSTEM =>I 08/2002

Pos.	Part-No.	I	Designation	Qantity	replaced by	Remarks
	7 9149 50 922		cable binder.	1		to pos. 23
24	350 586 10 03		cover sheet	1		
25	000 951 72 07		angle	1		
26	9 008 311 128	1	hexagon head screw ISO 4017 M6x16-8.8-A2C	2		
27	9 292 003 014	1	washer ISO 7089 A6,4-ST50-A2C	a.req.		
28	9 210 281 090	1	hexagon nut ISO 4032 DIN 934-M6-8A2C	3		
29	350 360 04 00		housing assy.	1		
30	350 363 19 00		cover	1		
31	350 363 25 03		plate	1		
32	000 964 03 27		cable shipper	1		
33	7 9190 86 803		fuse element DIN 72581 C5-32V	1		
34	7 9190 86 807		fuse element DIN 72581 C20-32V	1		
35	7 9190 86 809		fuse element DIN 72581 C30-32V	1		
36	9 041 201 045	1	*zs-am3x35-84-4.8a2c ISO 1207 84-AM3X35-4.8A2C	2		
37	9 292 003 008	1	washer DIN 125 A3,2-ST50-A2C	2		
38	9 210 281 040	1	hexagon nut ISO 4032 M3-934-8A2C	2		
39	7 9189 15 201		oscillator	1		
40	7 9162 99 084	3	relay	4	7 9162 91 264	
40	7 9162 91 264		relay 12V	4		
41	9 008 610 096	1	hexagon head screw DIN 7500 DEM5x12-ST-A3B	8		
43	7 9190 95 006		hood	3		
44	390 365 05 05		timer-transmitter	1		
46	9 309 412 014	1	washer DIN 7349 DIN 7349-6,4x17x3A2C	1		
47	350 360 60 04		support assy.	1		
48	350 363 19 01		cover	1		
49	9 008 311 126	1	hexagon head screw ISO 4017 M6x12-8.8-A2C	4		
50	7 9149 90 927		cable grommet 18,5/6x2	1		

1 = Packaged quantities 2 = Restricted availability 3 = Parts being phased out 4 = not available individually 5 = see separate list

https://truckmanualshub.com/

PARTICLE FILTER SYSTEM =>I 08/2002

Pos.	Part-No.	I	Designation	Qantity	replaced by	Remarks
51	000 964 45 38		frame	2		
52	000 964 45 37		frame	2		
53	000 973 26 03		switch	1		
54	7 9154 90 525		switch	1		
55	000 938 35 47		*symbol-red-sootÖfltr	1		
56	000 938 35 07		symbol insert	1		
57	000 918 25 43		diaphragm	1		
58	000 918 25 00		diaphragm	2		
59	000 974 15 08		lamp	1		
60	000 938 09 01		label particle filter english	1		english
61	350 527 06 03		support	1		
62	9 008 311 135	1	hexagon head screw ISO 4017 M6x25-8.8-A2C	2		
63	9 210 281 090	1	hexagon nut ISO 4032 DIN 934-M6-8A2C	2		
68	350 586 09 04		support	1		
69	9 124 311 307	1	stud DIN 939 DIN 939-M12x55	2		
70	000 914 16 21	1	shim 16.1x35x6.1-ST	a.req.		
71	000 914 13 03	1	washer 13x42x6	2		
72	9 210 281 140	1	hexagon nut ISO 4032 DIN 934-M12-8A2C	2		
73	350 527 06 03		support	1		
74	000 904 60 09	1	captive nut M6-A2C	1		
75	9 309 412 014	1	washer DIN 7349 DIN 7349-6,4x17x3A2C	1		
76	9 008 311 132	1	hexagon head screw ISO 4017 M6x20-8.8-A2C	1		
77	9 208 056 110	1	hexagon nut ISO 4035 DIN 439 BM8-04A2C	2		
78	000 914 16 21	1	shim 16.1x35x6.1-ST	2		
79	9 292 003 018	1	washer DIN 125 DIN 125-A8,4x16x1,6-A2C	2		
80	9 008 311 190	1	hexagon head screw ISO 4017 M8x40-8.8-A2C	2		
81	000 964 37 09		cover. hex head protective - sw13	2		

1 = Packaged quantities 2 = Restricted availability 3 = Parts being phased out 4 = not available individually 5 = see separate list

https://truckmanualshub.com/

PARTICLE FILTER SYSTEM =>I 08/2002

Pos.	Part-No.	I	Designation	Qantity	replaced by	Remarks
82	000 914 08 23	1	washer 8.1X39X4-ST (P)	2		
83	9 210 281 110	1	nut ISO 4032 934-M8-8A2C	2		
	7 9149 50 160		adhesive base	1		
	000 955 30 30	3	tie cable 6,3x4,8x198-SW	10	000 955 30 68	
	000 955 30 68	1	cable tie 4.6x205	10		
	7 9149 50 921	1	cable tie 3.6x140-black	10		

1 = Packaged quantities 2 = Restricted availability 3 = Parts being phased out 4 = not available individually 5 = see separate list

https://truckmanualshub.com/

https://truckmanualshub.com/

PARTICLE FILTER SYSTEM 09/2002 |=>

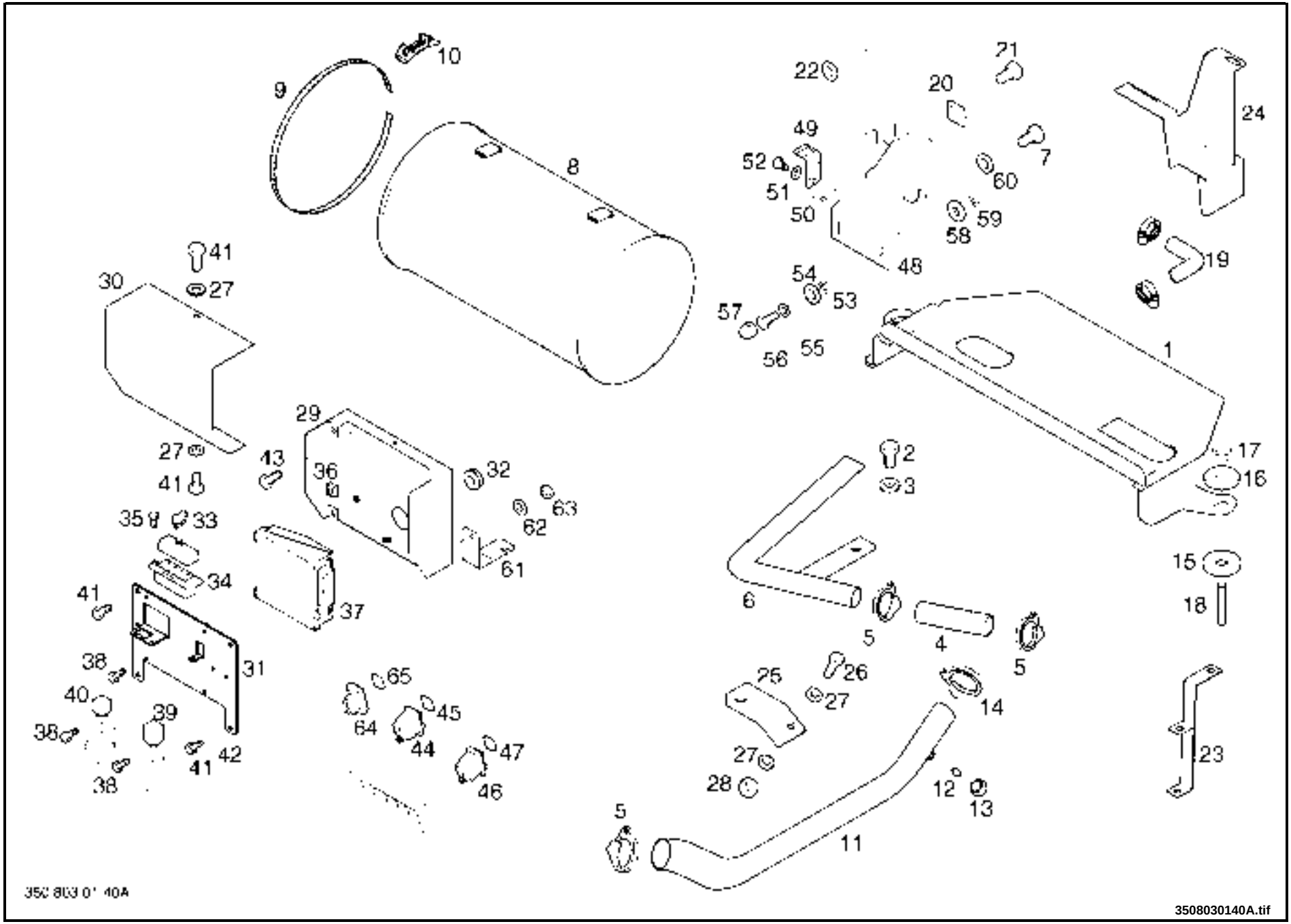

https://truckmanualshub.com/

Pos.	Part-No.	I	Designation	Qantity	replaced by	Remarks
1	350 580 35 06		console assy.	1		
2	9 008 311 298	1	hexagon head screw ISO 4017 M12x30-8.8-A2C	1		
3	9 291 003 022	1	washer DIN 125 B12-HV200-A2C	1		
4	000 957 50 36	3	corrugated hose	1	000 957 50 71	
4	000 957 50 71		corrugated hose 40x279	1		
5	000 955 22 83		pipe clip 43,5-M8-W1	3		
6	350 580 01 13		pipe assy.	1		H12-18D
6	350 580 01 02		exhaust pipe assy.	1		H20D
7	9 008 311 132	1	hexagon head screw ISO 4017 M6x20-8.8-A2C	1		
8	350 586 18 00		insulation	1		
9	000 937 01 22		tightening strap	3		
10	000 983 99 28		cocking lever	3		
11	350 580 06 06		exhaust pipe assy.	1		
12	000 954 20 01		locking pin	1		
13	000 952 01 04		nut DIN 3870 6-L-A3C	1		
14	000 955 22 85		clip pipe 45-M8-W1	1		
15	000 914 16 21	1	shim 16.1x35x6.1-ST	a.req.		
16	000 914 13 03	1	washer 13x42x6	2		
17	9 210 281 140	1	hexagon nut ISO 4032 DIN 934-M12-8A2C	2		
18	9 124 311 307	1	stud DIN 939 DIN 939-M12x55	2		
19	000 964 14 14		manifold	1		
20	000 918 56 21		strap	1		
21	9 008 311 068	1	hexagon head screw ISO 4017 M4x16-8.8-A2C	2		
22	9 292 003 010	1	washer DIN 125 A4.3x9x0.8-125-A2C	2		
23	350 360 60 06		support assy.	1		
	7 9149 50 922		cable binder.	1		
24	350 586 10 03		cover sheet	1		

1 = Packaged quantities 2 = Restricted availability 3 = Parts being phased out 4 = not available individually 5 = see separate list

https://truckmanualshub.com/

PARTICLE FILTER SYSTEM 09/2002 |=>

Pos.	Part-No.	I	Designation	Qantity	replaced by	Remarks
25	000 951 72 07		angle	1		
26	9 008 311 128	1	hexagon head screw ISO 4017 M6x16-8.8-A2C	2		
27	9 292 003 014	1	washer ISO 7089 A6,4-ST50-A2C	a.req.		
28	9 210 281 090	1	hexagon nut ISO 4032 DIN 934-M6-8A2C	3		
29	350 360 04 01		housing assy.	1		
30	350 363 19 00		cover	1		
31	350 363 25 11		plate	1		
32	000 964 03 27		cable shipper	1		
33	7 9190 86 803		fuse element DIN 72581 C5-32V	1		
33	7 9190 86 807		fuse element DIN 72581 C20-32V	1		
33	7 9190 86 809		fuse element DIN 72581 C30-32V	1		
34	7 9190 00 107		fuse box	1		
35	9 008 610 065		hexagon head screw DIN 7500 DEM4x10-ST-A3B	2		
36	000 904 60 09		captive nut M6-A2C	4		
37	390 360 63 41		control unit electronic assy.	1		
38	9 008 610 093	1	hexagon head screw DIN 7500 DEM5x8-ST-A3B	6		
39	7 9189 15 217		buzzer 12v	1		
40	000 973 13 15		relay 12v 70a	1		
41	9 008 311 126	1	hexagon head screw ISO 4017 M6x12-8.8-A2C	6		=>|11/2002
41	9 008 311 126	1	hexagon head screw ISO 4017 M6x12-8.8-A2C	5		12/2002|=>
41a	9 008 311 132	1	hexagon head screw ISO 4017 M6x20-8.8-A2C	1		12/2002|=>
42	9 332 622 014	1	washer lock serrated DIN 6798 V6,4-PHR	1		
43	9 008 311 135	1	hexagon head screw ISO 4017 M6x25-8.8-A2C	2		
44	000 973 26 03		switch	1		emergency-off - particle filter
45	000 938 35 47		*symbol-red-sootÖfltr	1		
46	7 9154 90 525		switch	1		start - particle filter
47	000 938 35 07		symbol insert	1		

1 = Packaged quantities 2 = Restricted availability 3 = Parts being phased out 4 = not available individually 5 = see separate list

https://truckmanualshub.com/

Pos.	Part-No.	I	Designation	Qantity	replaced by	Remarks
47	000 938 35 39		symbol insert black	1		
48	350 586 09 04		support	1		
49	350 527 06 03		support	1		
50	000 904 60 09	1	captive nut M6-A2C	1		
51	9 309 412 014	1	washer DIN 7349 DIN 7349-6,4x17x3A2C	1		
52	9 008 311 132	1	hexagon head screw ISO 4017 M6x20-8.8-A2C	1		
53	9 208 056 110	1	hexagon nut ISO 4035 DIN 439 BM8-04A2C	2		
54	000 914 16 21	1	shim 16.1x35x6.1-ST	2		
55	9 292 003 018	1	washer DIN 125 DIN 125-A8,4x16x1,6-A2C	2		
56	9 008 311 190	1	hexagon head screw ISO 4017 M8x40-8.8-A2C	2		
57	000 964 37 09		cover. hex head protective - sw13	2		
58	000 914 08 23	1	washer 8.1X39X4-ST (P)	2		
59	9 210 281 110	1	nut ISO 4032 934-M8-8A2C	2		
60	9 309 412 014	1	washer DIN 7349 DIN 7349-6,4x17x3A2C	1		
61	350 363 14 37		support	1		
62	9 309 412 014	1	washer DIN 7349 DIN 7349-6,4x17x3A2C	2		
63	9 210 281 090	1	hexagon nut ISO 4032 DIN 934-M6-8A2C	2		
64	000 974 15 24		light indicator 12V	1		01/2004 |=>
	7 9195 64 937		bulb DIN 72601 W5/1,2-12V 1,2W	1		to pos. 64
65	000 938 35 47		*symbol-red-sootÖfltr	1		
65	000 938 35 39		symbol insert black	1		

1 = Packaged quantities 2 = Restricted availability 3 = Parts being phased out 4 = not available individually 5 = see separate list

https://truckmanualshub.com/

PARTICLE FILTER

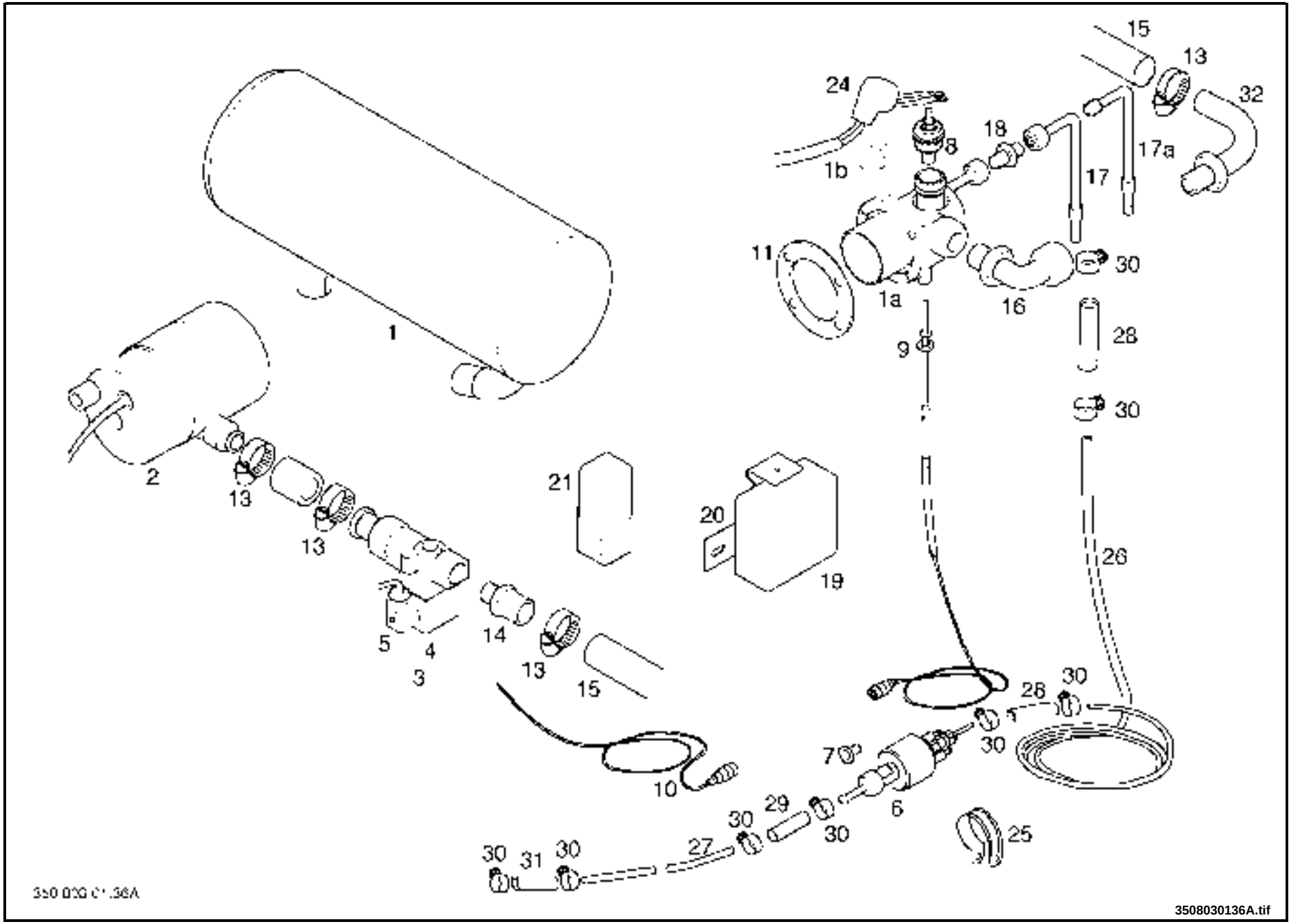

https://truckmanualshub.com/

PARTICLE FILTER

Pos.	Part-No.	I	Designation	Qantity	replaced by	Remarks
	350 580 10 11		particle filter assy.	1		=>| 08/2002 = pos. 1-31
	350 580 10 12		particle filter assy.	1		09/2002 |=> = pos. 1-18 , 24-31
1	350 586 16 01		particle filter	1		
1a	350 586 22 00	3	combustion chamber	1	350 586 22 02	
1a	350 586 22 02		burner	1		
1b	9 210 826 110		hexagon nut ISO 4032 DIN 934-M8-MS	4		
2	351 586 23 03		blower	1		
3	000 944 24 02		valve	1		350.580.10.11 = Pos. 3+14
4	350 589 01 03		seal	1		
5	351 381 03 42		harness	1		
6	000 981 02 05		pump	1		
7	000 982 15 01		strainer	1		
8	000 972 02 01	3	glow plug	1	000 972 02 07	
8	000 972 02 07		glow plug	1		
9	000 972 13 02		gauge	1		
10	000 975 90 10		cable	1		
11	350 589 01 02		seal	1		
13	000 955 20 09		clip hose DIN 3017 A16-27x9-W2	4		
14	000 951 20 92		union	2		
	9 636 801 236		seal ring DIN 7603 A21x26-Cu	2		to pos. 14
15	000 964 15 13		hose	1		
16	9 715 002 685		elbow DIN 3942 18L-V80-A3C	1		
17a	351 586 02 05		pipe	1		350.580.10.11
19	000 944 01 11	3	controller	1		=>| 08/2002
	350 580 90 00		repair kit assy. particle filter	1		= pos. 29-43, 61, see register 01/17A and pos. 1-3, see register 06/12A

1 = Packaged quantities 2 = Restricted availability 3 = Parts being phased out 4 = not available individually 5 = see separate list

https://truckmanualshub.com/

PARTICLE FILTER

Pos.	Part-No.	I	Designation	Qantity	replaced by	Remarks
20	350 586 09 02		support	1		=>| 08/2002
21	7 9162 99 061		relay	1		=>| 08/2002
24	350 381 03 15		harness	1		
25	000 955 22 31		clip DIN 3016-1 D1-80x15-W1-1	1		
26	000 957 51 50		pipe DIN 73378	1		
	7 9133 00 401		hose corrugated 6,9-MW-PPmod-SW	1		=>| 08/2002 to pos. 26
27	000 957 51 51		pipe DIN 73378	1		
28	000 957 51 27		hose	2		
29	000 957 51 26		hose	1		
30	000 955 20 51		clip DIN 3017 DIN 3017 10X9-B1	8		
31	000 951 72 03		union	1		
32	000 950 17 14		elbow pipe assy.	1		

1 = Packaged quantities 2 = Restricted availability 3 = Parts being phased out 4 = not available individually 5 = see separate list

Register 02 : DRIVE TRANSMISSION

02/01	00 - 02	center piece AH20-01
02/02	00 - 02	axle driven gear GR2H-01
02/03	00 - 01	service unit AH20-01
02/04	00 - 02	Power unit and housing
02/05	00 - 03	Port plate housing and valves
02/06	00 - 01	Remote control E2 (4-16 bar)
02/07	00 - 01	Service units HPV55-02

https://truckmanualshub.com/

center piece AH20-01

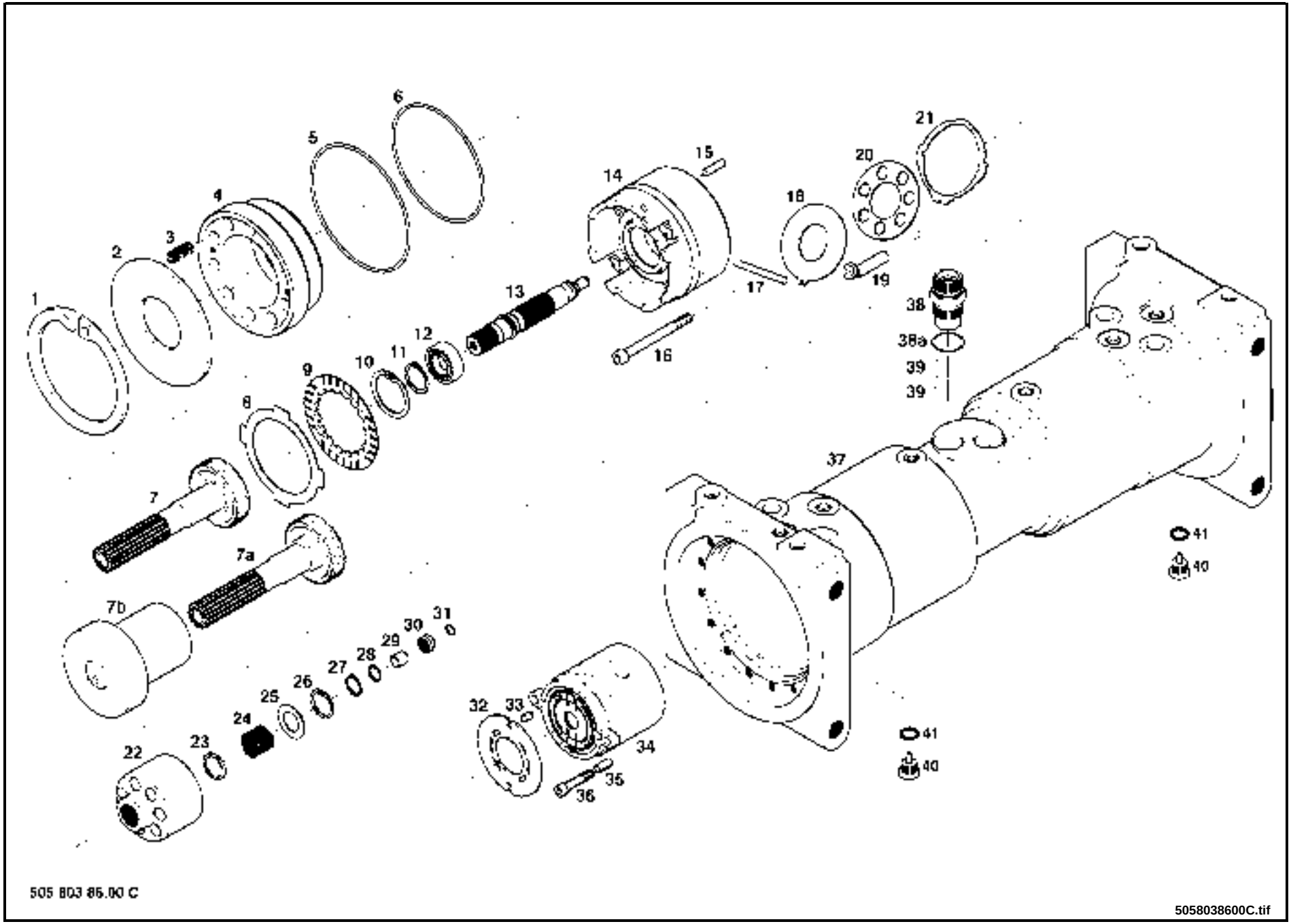

https://truckmanualshub.com/

center piece AH20-01

Pos.	Part-No.	I	Designation	Qantity	replaced by	Remarks
1	9 456 622 829	1	circlip DIN 472	2		
2	000 914 44 04		washer	2		
3	000 921 92 42		compression spring 2,5x12,5x32	20		
4	505 504 55 05	3	brake piston	2	505 504 55 07	=>| H2X.505.L.02067
4	505 504 55 07		brake piston	2		H2X.505.L.02068 |=>
5	000 963 11 26		o ring DIN 3771	2		
6	000 963 11 14		o ring	2		
7	505 264 11 02	3	SUNWHEEL	2	505 260 40 00	
	505 260 40 00		sun wheel assy.	2		includes pos. 7a and 7b
7a	----------	4	sun wheel AH20	2		
7b	----------	4	bush	2		
8	505 504 13 04		wear disc	12		
9	505 504 13 02		wear disc	10		
10	9 456 622 518	1	retaining ring DIN 472 DIN 472-52x2	2		
11	9 455 622 279	1	retaining ring DIN 471 Din 471-25x1,2	2		
12	9 511 000 119		bearing DIN 5412	2		
13	505 323 01 05		drive shaft	2		
14	505 323 15 07		swash plate	2		
15	9 385 450 370	1	cylindrical pin ISO 8733	2		
16	9 048 348 253	1	socket-head screw M10x85-10.9-PHR	8	000 901 06 00	
16	000 901 06 00		socket-head screw #NLICH 7984 M10x85-10.9-T50	8		
17	9 385 600 329	1	pin ISO 8735	2		
18	291 343 51 05		sliding disc	2		
19	291 320 04 07		piston assy.	14		
20	291 323 14 07		pull-back plate	2		
21	291 323 31 11		ring 2,52	2 *		* = optionally
21	291 323 31 12		ring 2,54	2 *		

1 = Packaged quantities 2 = Restricted availability 3 = Parts being phased out 4 = not available individually 5 = see separate list

https://truckmanualshub.com/

center piece AH20-01

02

Pos.	Part-No.	I	Designation	Qantity	replaced by	Remarks
21	291 323 31 13		ring	2 *		
21	291 323 31 14		ring 2,58	2 *		
21	291 323 31 15		ring 2,60	2 *		
22	291 320 08 06		cylinder block assy.	2		
23	000 914 24 01		washer	2		
24	000 921 40 01		compression spring 4x28,8x48	2		
25	000 914 24 09		washer 24x34x2,0	2		
26	9 456 622 377	1	circlip DIN 472	2		
27	9 455 622 245	1	lock ring DIN 471 DIN 471-22x1,2	2		
28	000 907 06 04		snap ring 21x1,2	2		
29	000 925 10 07		ring	2		
30	000 924 80 12		bearing	2		
31	000 907 50 09		snap ring 12x1	2		
32	291 324 02 06		port plate	2		
33	000 912 11 45		bolt	4		
34	505 301 05 06		port plate housing	1		
35	9 384 620 405	1	pin spring slotted 10X16-Y7346	2		
36	9 045 311 186	1	socket-head screw ISO 4762 M8x30-8.8	2		
37	505 331 09 02		axle housing	1		
38	000 951 22 48		pipe adaptor	2		with Pos. 38a
38a	000 962 08 10		ring sealing DIN 3869 27-Fpm-V80	2		
39	000 963 22 33		o-ring DIN 3771 26,5x3,55-V80	4		
40	000 903 30 02		plug DIN 908 908-M18x1,5-5.8MA	2		
41	9 636 801 195	1	seal ring DIN 7603 A18x22-Cu	2		

1 = Packaged quantities 2 = Restricted availability 3 = Parts being phased out 4 = not available individually 5 = see separate list

https://truckmanualshub.com/

https://truckmanualshub.com/

axle driven gear GR2H-01

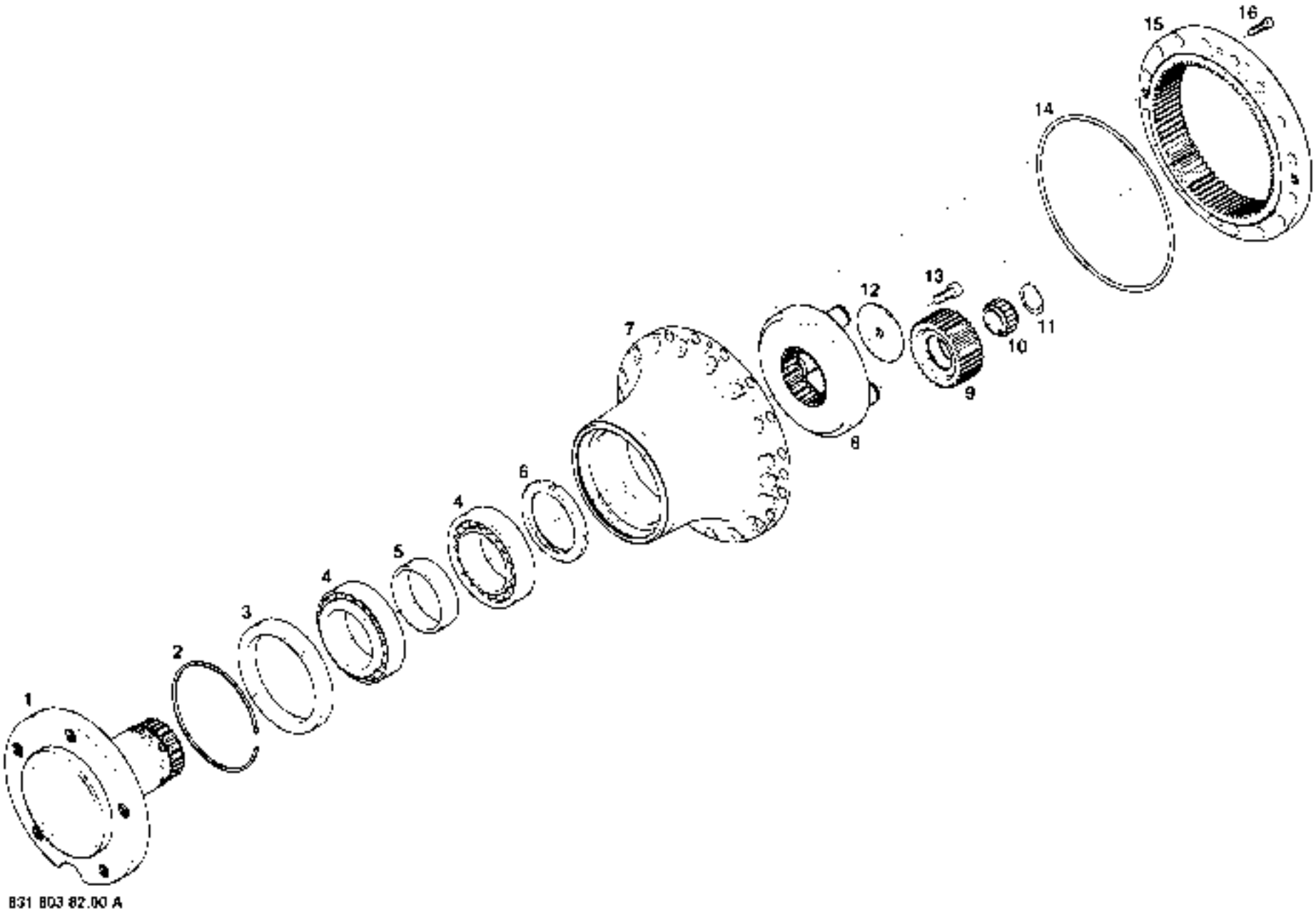

8318038200A.tif

https://truckmanualshub.com/

axle driven gear GR2H-01

Pos.	Part-No.	I	Designation	Qantity	replaced by	Remarks
	831 260 35 00		wheel shaft assy.	2		includes pos. 1-7
1	831 264 35 03		wheel shaft	2		
2	000 907 06 00		snap ring	2		
3	000 928 03 24		seal ring	2		Loctite nr. 243
4	9 509 000 875		roller bearing DIN 720	4		
5	000 915 60 11		spacer ring	2 *		* = optionally
5	000 915 60 12		spacer ring	2 *		
5	000 915 60 13		spacer ring	2 *		
5	000 915 60 14		spacer ring 60.2x68x18.39	2 *		
5	000 915 60 15		spacer ring 60.2x68x18.42	2 *		
5	000 915 60 16		spacer ring 60.2x68x18.45	2 *		
5	000 915 60 17		spacer ring 60.2x68x18.48	2 *		
5	000 915 60 18		spacer ring 60.2x68x18.51	2 *		
5	000 915 60 19		spacer ring 60.2x68x18.54	2 *		
5	000 915 60 20		spacer ring 60.2x68x18.57	2 *		
5	000 915 60 21		spacer ring	2 *		
5	000 915 60 25		ring 60.2x68x18.63	2 *		01/2002 |=>
5	000 915 60 26		ring 60.2x68x18.66	2 *		01/2002 |=>
5	000 915 60 27		ring 60.2x68x18.24	2 *		01/2002 |=>
5	000 915 60 28		ring 60.2x68x18.27	2 *		01/2002 |=>
6	000 905 02 12		nut DIN 981	2		Loctite nr. 270
7	831 264 01 07		transmission housing	2		
8	831 264 08 05		planet gear carrier	2		
	831 260 45 00		planet wheel assy.	6		includes pos. 9 and 10
9	831 264 09 04		planet wheel	6		
10	000 924 69 06		cyl. roller bearing 20 x 33 , 83 x 18	6		
11	9 455 622 215	1	retaining ring DIN 471 DIN 471-20x1,2	6		

1 = Packaged quantities 2 = Restricted availability 3 = Parts being phased out 4 = not available individually 5 = see separate list

https://truckmanualshub.com/

axle driven gear GR2H-01

02

Pos.	Part-No.	I	Designation	Qantity	replaced by	Remarks
12	000 914 09 07		washer	2		
13	9 048 348 178	1	socket-head screw DIN 7984-M8x16-10.9PH	2		Loctite nr. 243
14	000 963 12 28		o ring	2		
15	831 264 10 03		annular gear	2		
16	9 045 336 132	1	socket-head screw ISO 4762 M6x20-8.8-MK7x2-PHR	4		

1 = Packaged quantities 2 = Restricted availability 3 = Parts being phased out 4 = not available individually 5 = see separate list

https://truckmanualshub.com/

https://truckmanualshub.com/

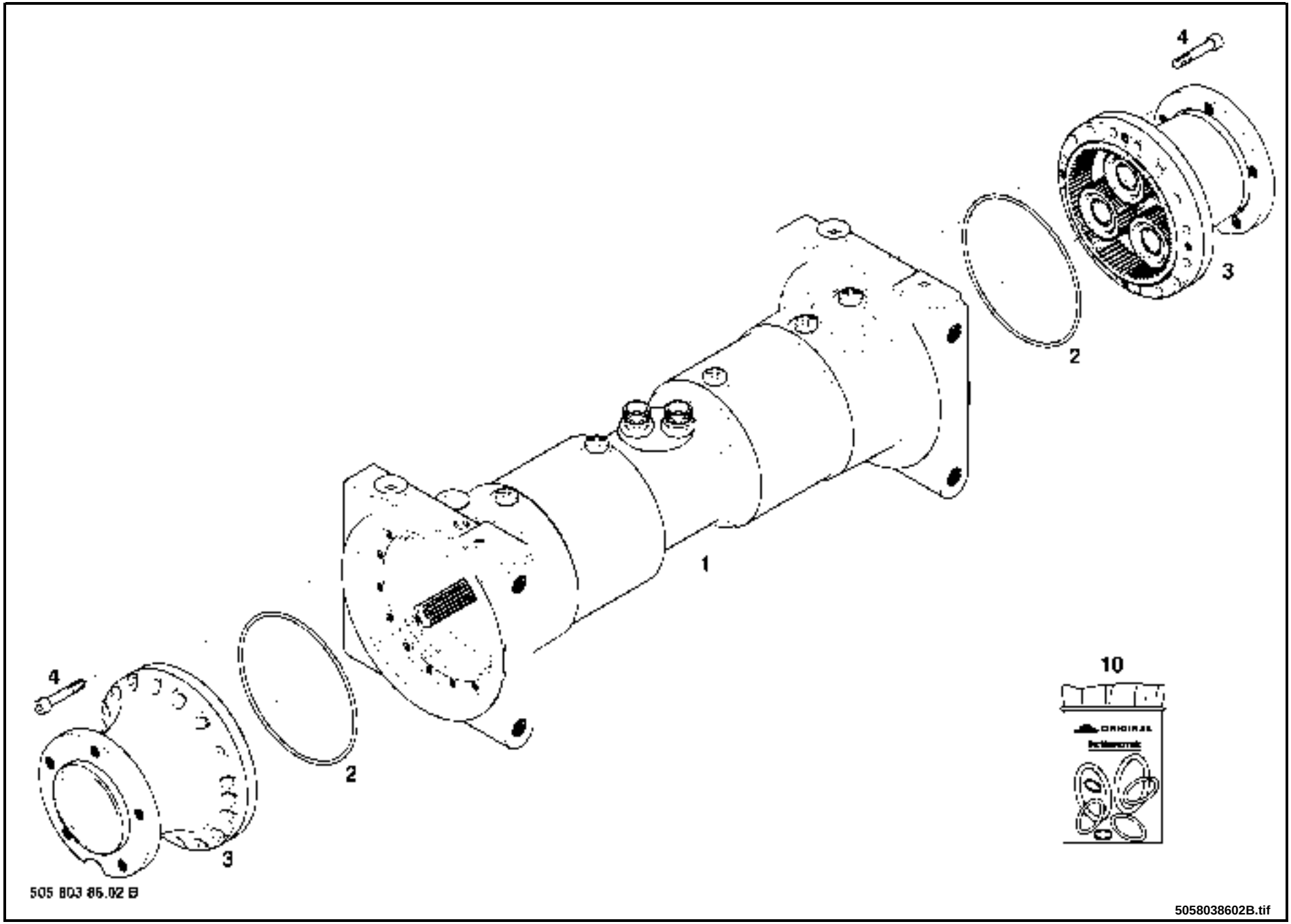

https://truckmanualshub.com/

service unit AH20-01

Pos.	Part-No.	I	Designation	Qantity	replaced by	Remarks
	505 000 85 00		service unit	1		includes pos. 1-4
1	505 000 95 00		service unit AH20-01	1		center piece (with pos. 2)
2	000 963 12 28		o ring	2		
3	831 000 85 00		service unit	2		
4	9 045 341 245	1	socket-head screw ISO 4762 M10x45-10.9	32		
10	505 320 99 01		seal kit	1		

1 = Packaged quantities 2 = Restricted availability 3 = Parts being phased out 4 = not available individually 5 = see separate list

https://truckmanualshub.com/

Power unit and housing

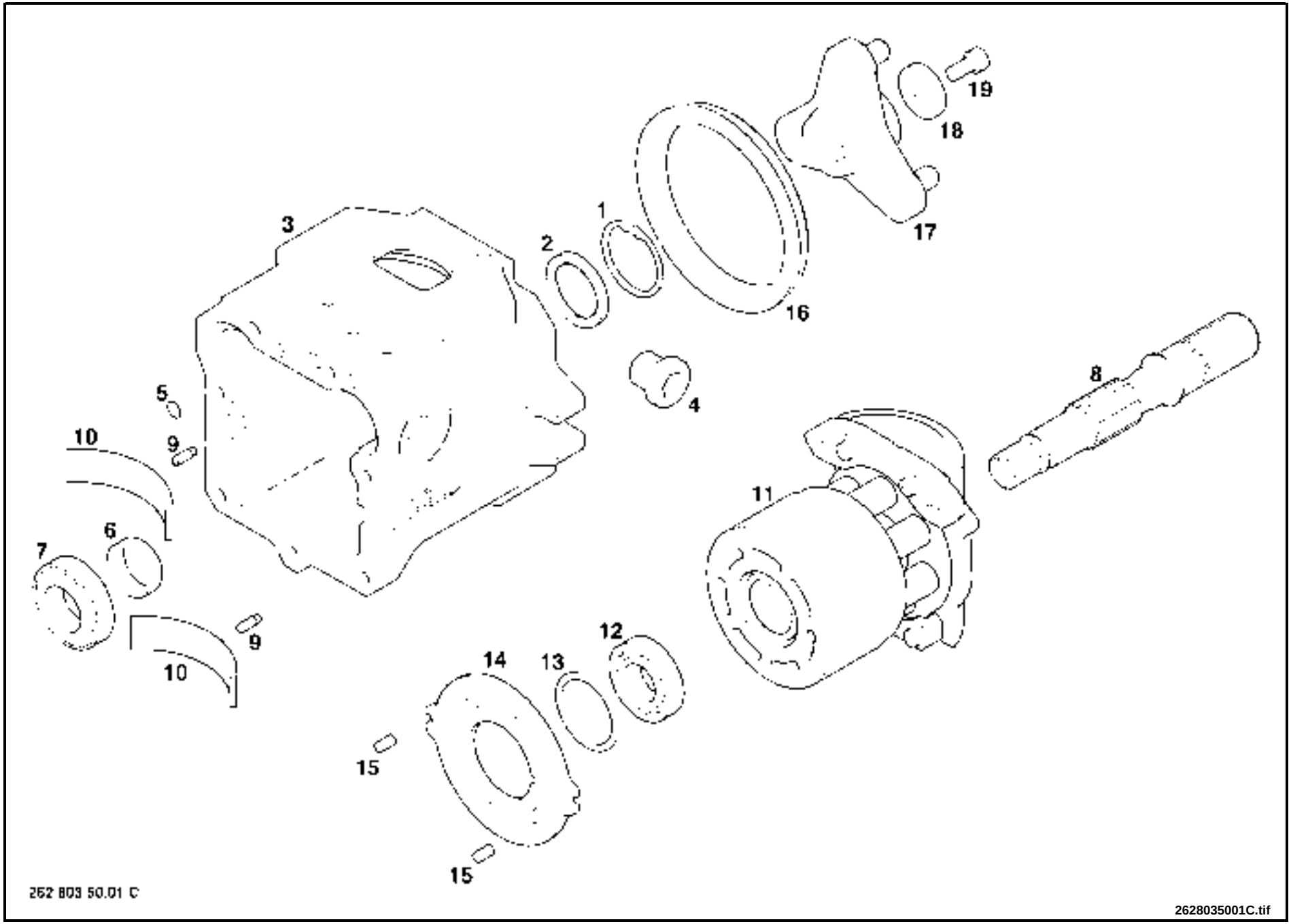

https://truckmanualshub.com/

Power unit and housing

Pos.	Part-No.	I	Designation	Qantity	replaced by	Remarks
1	9 456 622 552	1	retaining ring DIN 472	1		
2	000 928 03 67		shaft seal ring WN 17216	1		Loctite nr. 270
3	262 301 00 06		housing DIN	1		
4	000 952 40 29		screw plug M22x1,5	1		
5	000 963 00 38		o ring DIN 3770	3		
6	292 323 05 01	3	race	1	292 323 05 02	Loctite nr. 648
6	292 323 05 02		race	1		Loctite nr. 648
7	000 924 68 06		tapered roller bearing 34,925x65,088	1		
8	262 323 01 03	3	drive shaft SAE 16/32 pitch 21	1	262 323 01 05	
8	262 323 01 05		drive shaft SAE 16/32 pitch 21	1		
9	000 908 02 61		pin	2		
10	000 923 40 38		sliding bearing	2		
11	262 320 00 00		power unit assy.	1		
12	9 509 000 615		shaft inner bearing DIN 720	1		
13	000 914 61 41		shim	1 *		* = optionally
13	000 914 61 42		shim	1 *		
13	000 914 61 43		shim	1 *		
13	000 914 61 44		shim	1 *		
13	000 914 61 45		shim	1 *		
13	000 914 61 46		shim	1 *		
13	000 914 61 47		shim	1 *		
13	000 914 61 48		shim	1 *		
14	262 324 02 03		port plate righthand	1		
15	9 381 660 312	1	cylindrical pin ISO 8734 6m6x20-A-St	2		
16	262 231 14 00		intermediate flange	1		
17	262 230 64 01		coupling flange assy.	1		
18	000 914 11 28		washer	1		

1 = Packaged quantities 2 = Restricted availability 3 = Parts being phased out 4 = not available individually 5 = see separate list

https://truckmanualshub.com/

Pos.	Part-No.	I	Designation	Qantity	replaced by	Remarks
19	**9 048 348 236**	**1**	**screw**	**1**		

1 = Packaged quantities **2 = Restricted availability** **3 = Parts being phased out** **4 = not available individually** **5 = see separate list**

https://truckmanualshub.com/

https://truckmanualshub.com/

Port plate housing and valves

02

2628035201D.tif

https://truckmanualshub.com/

Port plate housing and valves

Pos.	Part-No.	I	Designation	Qantity	replaced by	Remarks
1a	262 300 03 03		port plate housing assy.	1		
3	000 914 03 20		washer	a.req.		
3	000 914 03 31		washer	a.req.		
3	000 914 03 21		washer	a.req.		
3	000 914 03 32		washer	a.req.		
3	000 914 03 22		washer	a.req.		
3	000 914 03 33		washer	a.req.		
3	000 914 03 23		washer	a.req.		
3	000 914 03 34		washer	a.req.		
3	000 914 03 24		washer	a.req.		
3	000 914 03 35		washer	a.req.		
3	000 914 03 25		washer	a.req.		
3	000 914 03 36		washer	a.req.		
3	000 914 03 26		washer	a.req.		
3	000 914 03 37		washer	a.req.		
3	000 914 03 27		washer	a.req.		
3	000 914 03 38		washer	a.req.		
3	000 914 03 28		washer	a.req.		
3	000 914 03 39		washer	a.req.		
3	000 914 03 29		washer	a.req.		
3	000 914 03 40		washer	a.req.		
3	000 914 03 30		washer	a.req.		
5	000 963 20 31		o ring	2		
6	000 962 27 53		ring	2		
7	262 301 40 02	3	pipe	2	262 301 40 03	
7	262 301 40 03		pipe	2		
8	000 962 38 26		o ring	2		

1 = Packaged quantities 2 = Restricted availability 3 = Parts being phased out 4 = not available individually 5 = see separate list

https://truckmanualshub.com/

Port plate housing and valves

02

Pos.	Part-No.	I	Designation	Qantity	replaced by	Remarks
9	262 345 04 01		servo piston	2		
10	262 343 51 01		washer 4,55	2 *		* = optionally
10	262 343 51 02		washer 4,65	2 *		
10	262 343 51 03		washer 4,75	2 *		
10	262 343 51 04		washer 4,85	2 *		
10	262 343 51 05		washer 4,95	2 *		
10	262 343 51 06		washer 5,05	2 *		
10	262 343 51 07		washer 5,15	2 *		
10	262 343 51 08		washer 5,25	2 *		
10	262 343 51 09		washer 5,35	2 *		
11	000 914 18 02		washer	2		
12	000 921 28 27		spring	2		
13	262 343 38 00		spring plate	2		
14	000 944 13 63		pressure relief valve VD9-BE02 420bar	2		
15	000 963 22 38		o ring 21,95X1,8-V80	2		
16	000 963 22 08		o-ring 22,2x3-V80	2		
17	000 962 49 28		ring A28x2x1	2		
20	000 963 21 07		o ring 12,3X2,4-V80	1		
21	600 340 50 80		pressure rel. valve assy. 17,5 bar	1		
26	9 148 010 156	1	screw plug WN 14141 M14X1.5-14141-V80	2		
27	9 045 341 248	1	screw cap hd ISO 4762 M10X60-10.9	7		
30	9 456 622 167	1	retaining ring DIN 472	1		
31	262 305 12 00		clutch	1		
32	000 963 08 13		o-ring 84x2-V80	1		
33	000 981 00 80		gear pump	1		for H12-03, H16-03, H18-03
33	000 981 21 29		gear pump	1		for H20-03
	000 960 80 44		seal kit	1		complet BOSCH

1 = Packaged quantities 2 = Restricted availability 3 = Parts being phased out 4 = not available individually 5 = see separate list

https://truckmanualshub.com/

Port plate housing and valves

Pos.	Part-No.	I	Designation	Qantity	replaced by	Remarks
	000 962 90 55		seal kit	1		complet ULTRA
	000 981 01 23		pump 14 cm3/U	1		pump 1
	000 960 80 60		seal kit	1		for pump 1
	000 981 01 24		gear pump 11 cm3/U	1		pump 2
	000 960 80 61		seal kit	1		for pump 2
34	9 045 311 239	1	socket-head screw ISO 4762 M10x25-8.8-A2C	2		
35	9 243 281 140	1	locknut WN 14302 M12-8.8	1		
36	502 343 05 15		bolt	1		
37	000 944 30 01		flow control valve	1		for 000.981.00.80 for H12-03, H16-03, H18-03
37	000 944 30 02		flow control valve	1		for 000.981.21.29 for H20-03

1 = Packaged quantities 2 = Restricted availability 3 = Parts being phased out 4 = not available individually 5 = see separate list

https://truckmanualshub.com/

Remote control E2 (4-16 bar)

2628035801D.tif

https://truckmanualshub.com/

Remote control E2 (4-16 bar)

Pos.	Part-No.	I	Designation	Qantity	replaced by	Remarks
1	584 340 27 00	3	remote control assy. E2 4-16bar/DIN 12V	1	584 340 27 06	with pos. 6-8
1	584 340 27 06	3	remote control assy. E2	1	584 340 27 91	with pos. 6-8
1	584 340 27 91		remote control assy. E2 4-16bar/DIN 12V	1	584 340 37 32	with pos. 6-8
1	584 340 37 32		remote control assy. E2 4-16bar/DIN 12V	1		with pos. 6-8
2	000 903 75 11		orifice D1,8-M6-St	2		
3	000 903 31 95		screw plug M8x1-5.8	2		
4	000 963 08 05		o ring	1		
5	000 963 01 12		o-ring 10x1,5-V80	7	000 963 21 14	
5	000 963 21 14		o-ring 10.5x1.5-V80	7		
6	000 973 60 84		magnet	2		
7	000 973 60 85		switching magnet	1		magnet outlet grey
8	000 963 22 16		o-ring 23,52x1,78-V80	3		
9	9 384 620 450	1	pin ISO 13337	4		
10	506 323 19 02		spacer	1		
11	9 048 348 183	1	socket-head screw Y7984-M8x25-10.9PH	2		Loctite nr. 648
12	9 289 003 110	1	shim DIN 988 DIN 988-12X18X0,1	a.req.		
12	9 289 003 109	1	shim DIN 988 12X18X0.5	a.req.		
13	9 455 622 113	1	retaining ring DIN 471 12X1-472	1		
14	9 045 316 186	1	socket-head screw ISO 4762 M8x30-8.8-A2C	4	9 045 348 186	
14	9 045 348 186	1	screw ISO 4762 M8x30-10.9-PHR	4		

1 = Packaged quantities 2 = Restricted availability 3 = Parts being phased out 4 = not available individually 5 = see separate list

https://truckmanualshub.com/

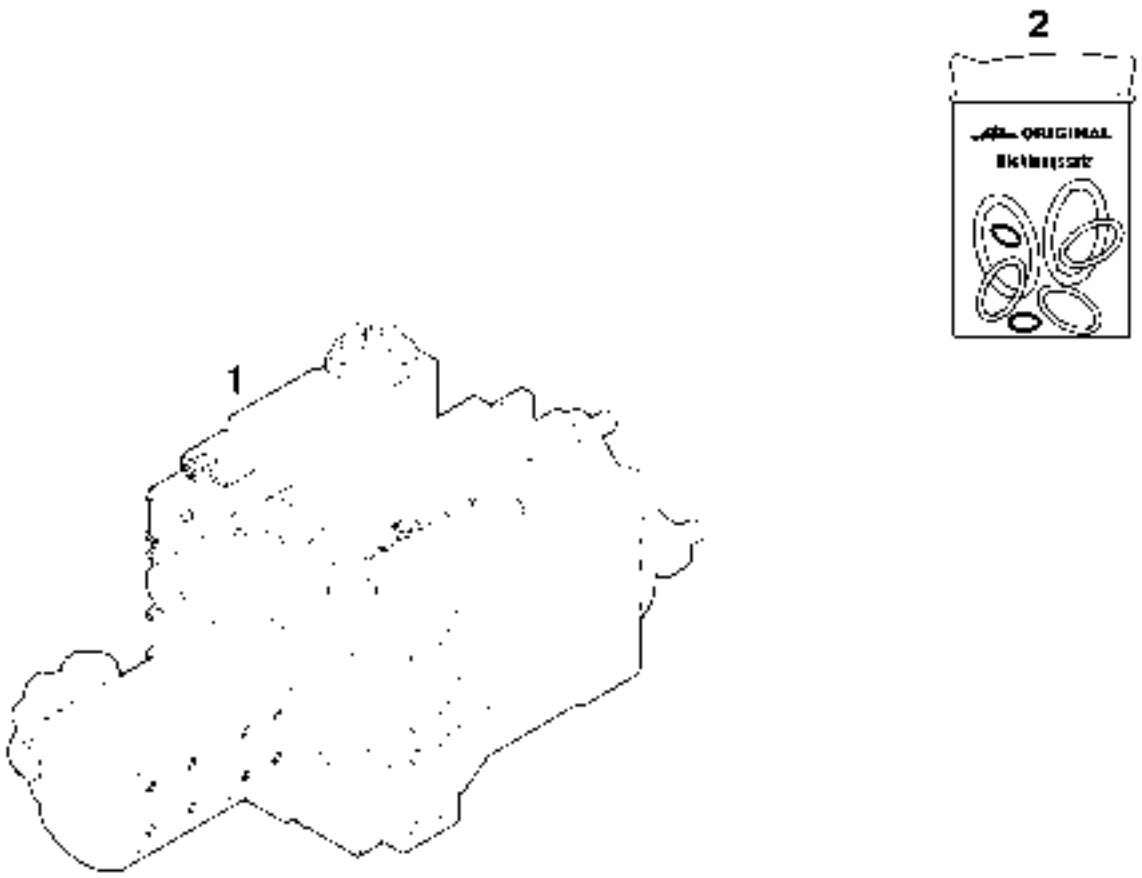

262 803 96.01

2628039601.tif

https://truckmanualshub.com/

Service units HPV55-02

Pos.	Part-No.	I	Designation	Qantity	replaced by	Remarks
1	262 000 95 51		service unit HPV55-02	1		for H12-03, H16-03, H18-03
1	262 000 95 59		service unit HPV55-02	1		for H20-03
2	262 320 99 00		seal kit	1		

1 = Packaged quantities 2 = Restricted availability 3 = Parts being phased out 4 = not available individually 5 = see separate list

https://truckmanualshub.com/

https://truckmanualshub.com/

Register 03 : CHASSIS, BODYWORK AND FITTINGS

03/01	00 - 03	CHASSIS,OVERHEAD GUARD AND COUNTERWEIGHT
03/02	00 - 04	HOOD AND COVERINGS
03/03	00 - 01	DAMPING MATS
03/04	00 - 02	DRIVER'S SEAT
03/05	00 - 01	DRIVER'S SEAT
03/06	00 - 01	DRIVER'S SEAT
03/07	00 - 01	DRIVER`S SEAT VERSION CONTAINER
03/08	00 - 06	DRIVER'S CAB
03/09	00 - 02	HEATER =>I 05/2002
03/10	00 - 02	HEATER 06/2002 I=>

https://truckmanualshub.com/

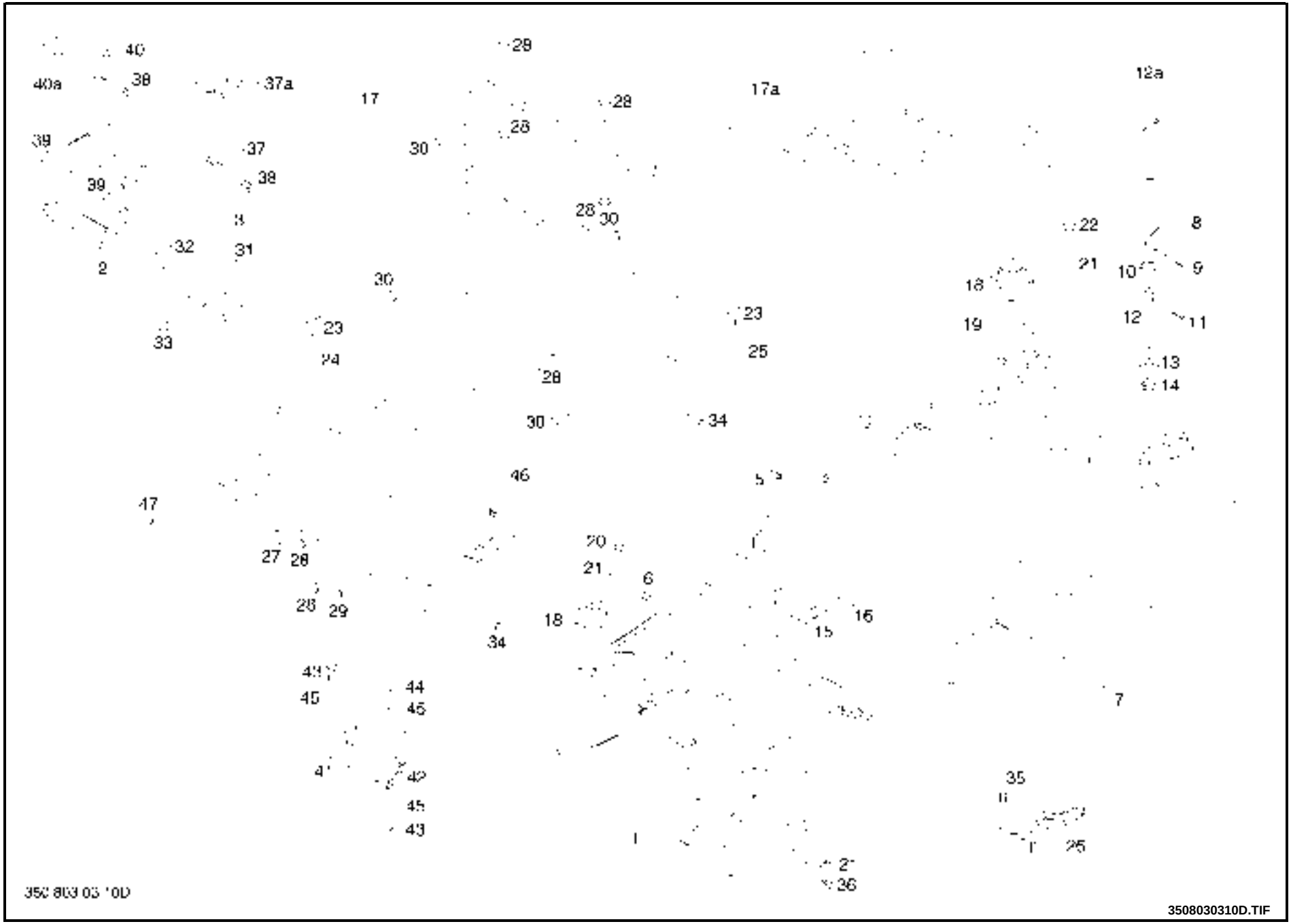

https://truckmanualshub.com/

CHASSIS,OVERHEAD GUARD AND COUNTERWEIGHT

Pos.	Part-No.	I	Designation	Qantity	replaced by	Remarks
1	350 400 30 07		chassis assy.	1		
	000 962 02 72		pipe plug WN 17253 30x12	2		for pos. 1
2	350 440 30 06	3	console assy.	1	350 440 30 07	including: 1x 350.441.65.14 - central control lever 1x 350.441.65.13 - single control lever 4x 000.965.41.39 4x 9.087.101.140
2	350 440 30 07		console assy.	1		C1X350R00095|=>
3	9 008 311 186	1	hexagon head screw ISO 4017 M8x30-8.8-A2C	4		
5	350 400 44 05	1	cover assy.	1		
6	9 062 311 178	1	countersunk screw ISO 10642 7991-M8x16-8.8A2C	3		
7	350 613 03 08	2	counterweight H12	1		
7	350 613 03 09	2	counterweight H16 LX	1		
7	350 613 03 10	2	counterweight	1		
7	350 613 03 13	2	counterweight H20-03	1		
7	350 613 03 18	2	counterweight H20-03-600C	1		H20-600C
	9 312 600 022		washer - spherical face DIN 6319 C13-6319ST-A2C	1		for 350.613.03.18
8	000 931 20 08		lever	1		
9	9 380 620 379	1	spring dowel sleeve ISO 8752 8x40-ST	1		
10	324 421 19 02		spring cap	1		
11	9 380 620 375	1	spring dowel sleeve ISO 8752 8x32-ST	1		
12	000 912 12 21		towing pin	1		
13	000 914 28 11	1	washer ISO 8738 28X42X3,5-0,5	1		
14	000 921 32 43		pressure spring 3,2x38x33	1		
15	9 008 311 531	1	hexagon head screw ISO 4017 M20x70-8.8-A2C	4		
16	000 914 20 21	1	washer	4		

1 = Packaged quantities 2 = Restricted availability 3 = Parts being phased out 4 = not available individually 5 = see separate list

https://truckmanualshub.com/

Pos.	Part-No.	I	Designation	Qantity	replaced by	Remarks
17	350 430 70 04		guard overhead assy.	1		
17a	350 430 70 01		guard overhead assy.	1		container version
18	000 965 40 36		damper	4		guard overhead
18	000 965 40 35		damper	4		driver's cab
19	000 953 01 45		two-bolt flange 66X11X126X88	2		
20	9 008 311 239	1	hexagon head screw ISO 4017 M10x25-8.8-A2C	4		
21	9 309 412 020	1	washer DIN 7349 DIN 7349-10,5x25x4	9		
22	9 045 311 243	1	socket-head screw ISO 4762 M10x35-8.8-A2C	4		
23	9 008 311 298	1	hexagon head screw ISO 4017 M12x30-8.8-A2C	4		
24	000 914 13 11		washer 13x55x5ST	2		
25	9 309 412 022	1	washer DIN 7349 DIN 7349-13x30x6-A2C	2		
26	351 431 22 00		plate	2		
27	000 962 65 07	1	pipe plug WN 17253	1		
28	000 962 65 05	1	plug WN 17253	a.req.		
29	000 962 65 06	1	plug pipe WN 17253 H9.5X4.5-BLACK	2		
30	000 962 65 04		pipe plug WN 17253 H11.5-4Xblack	5		
31	000 918 73 18		support	6		=>|C1X350T00256
31	000 918 73 18		support	4		C1X350T00257|=>
32	000 965 22 02		bumper rubber DIN 95364 C40x38-NR57St	1		
33	9 008 311 188	1	hexagon head screw ISO 4017 M8x35-8.8-A2C	1		
34	000 962 02 14	1	plug	4		
35	9 062 311 241	1	countersunk screw ISO 10642 7991-M10x30-8.8A2C	2		
36	9 210 281 130	1	nut hexagon ISO 4032 DIN 934-M10-8A2C	2		
37	350 363 42 04		angle	1		=>| 12/2000
37a	350 363 14 31		support	1		01/2001 |=>
38	9 008 311 177	1	hexagon head screw ISO 4017 M8x16-8.8-A2C	2		
39	9 210 281 110	1	nut ISO 4032 934-M8-8A2C	2		

1 = Packaged quantities 2 = Restricted availability 3 = Parts being phased out 4 = not available individually 5 = see separate list

https://truckmanualshub.com/

CHASSIS,OVERHEAD GUARD AND COUNTERWEIGHT

Pos.	Part-No.	I	Designation	Qantity	replaced by	Remarks
40	350 527 06 03		support	1		=>| 06/2002 07/2005|=>
40	350 527 06 03		support	2		07/2002|=> =>|06/2005
40a	350 363 42 18		angle	1		07/2005 |=>
41	350 360 60 13		support assy.	1		
42	351 363 14 26		support	1		
43	9 008 311 180	1	hexagon head screw ISO 4017 M8x20-8.8-A2C	2		
44	9 210 281 110	1	nut ISO 4032 934-M8-8A2C	2		
45	9 292 003 018	1	washer DIN 125 DIN 125-A8,4x16x1,6-A2C	2		
46	000 964 13 56		edge protection 13,5x120An	1		
47	000 962 01 68		pipe plug WN 17253 WN 17253-5,2x7	a.req.		

1 = Packaged quantities 2 = Restricted availability 3 = Parts being phased out 4 = not available individually 5 = see separate list

https://truckmanualshub.com/

HOOD AND COVERINGS

03

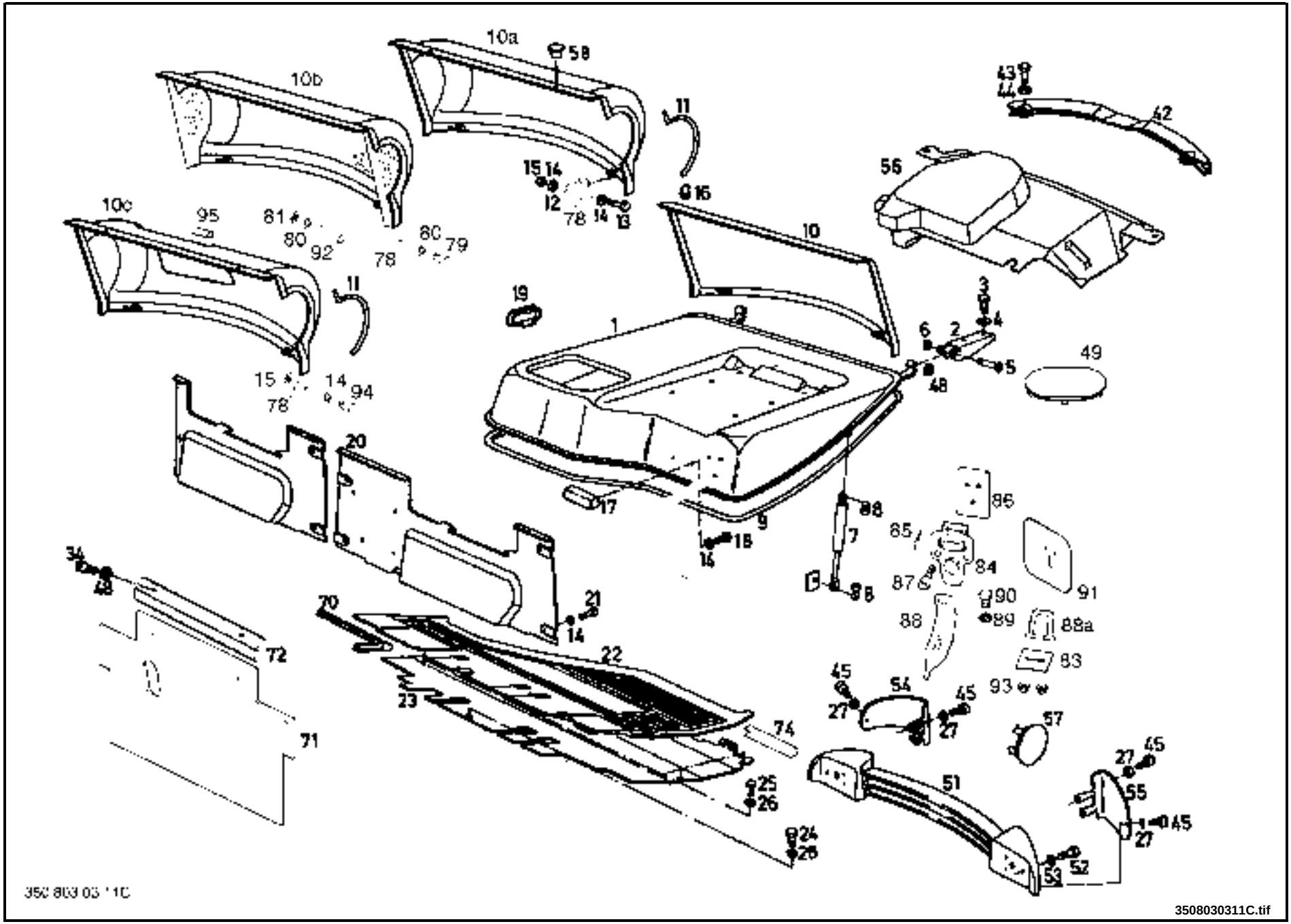

https://truckmanualshub.com/

HOOD AND COVERINGS

Pos.	Part-No.	I	Designation	Qantity	replaced by	Remarks
1	350 430 06 01		hood engine assy.	1		
2	000 930 05 10		hinge (engine hood) assy.	2		
3	9 008 311 239	1	hexagon head screw ISO 4017 M10x25-8.8-A2C	4		
4	9 309 412 020	1	washer DIN 7349 DIN 7349-10,5x25x4	4		
5	000 912 40 47		hinge pin	2		
6	000 907 33 17	1	locking disc A10x0,6	2		
7	000 965 55 12		gas spring D22X170	1		
8	000 934 25 03		bolt with cotter WN 17441 8x16	2		
9	000 964 11 10		sealing profile D32,4x3655	1		=>|02/2008
10	350 430 30 00		rear wall cover assy.	1		Diesel
10a	350 430 30 09		rear wall cover assy.	1		LPG
10b	350 430 30 12		rear wall assy.	1		particle filter
10c	350 430 30 08		rear wall assy.	1		LPG tank Loctite no. 5203
11	000 964 11 11		edge protection	2		only LPG version
12	000 907 30 01		circlip	2		
13	9 008 311 132	1	hexagon head screw ISO 4017 M6x20-8.8-A2C	2		
14	9 309 412 014	1	washer DIN 7349 DIN 7349-6,4x17x3A2C	10		
15	9 210 281 090	1	hexagon nut ISO 4032 DIN 934-M6-8A2C	2		
16	000 962 50 35		cap	2		
17	000 931 08 01		handle	1		
18	9 087 144 125	1	screw pan head ISO 7045 M6X10-7985-4.8A2C	2		
19	000 962 50 63		cap	1		
20	350 432 24 04		lining	1		
20	350 432 24 06		panelling	1		heating
21	9 087 101 128	1	screw pan head ISO 7045 M6X16-7985-4.8A2C	4		
22	350 431 30 16		mat	1		double pedal

1 = Packaged quantities 2 = Restricted availability 3 = Parts being phased out 4 = not available individually 5 = see separate list

https://truckmanualshub.com/

Pos.	Part-No.	I	Designation	Qantity	replaced by	Remarks
22	350 431 30 18		mat	1		double pedal / version cabin
22	350 431 30 20		floor mat	1		double pedal and heating
22	350 431 30 17		floormat	1		single pedal
22	350 431 30 19		floormat	1		single pedal / version cabin
22	350 431 30 21		floormat	1		single pedal and heating
23	350 431 15 01		floorplate	1		=>| 03/2002
23	350 431 15 04		Floorplate	1		04/2002 |=>
23	350 430 14 01		pottom plate assy.	1		=>| 03/2002 heating
23	350 430 14 02		floorplate assy.	1		04/2002 |=> heating
24	9 008 311 180	1	hexagon head screw ISO 4017 M8x20-8.8-A2C	3		
25	9 008 311 177	1	hexagon head screw ISO 4017 M8x16-8.8-A2C	2		
26	9 308 003 018	1	washer ISO 7093-1 8-200HV-A2C	6		
33	9 008 311 180	1	hexagon head screw ISO 4017 M8x20-8.8-A2C	2		
34	9 008 311 177	1	hexagon head screw ISO 4017 M8x16-8.8-A2C	2		
42	350 436 29 40		guard bracket	1		H12-H20
42	350 436 29 43		guard hoop	1		H12-H20 version particle filter
42	350 436 29 02		bracket	1		H20/H20-600C
43	9 008 311 298	1	hexagon head screw ISO 4017 M12x30-8.8-A2C	2		
44	9 291 003 022	1	washer DIN 125 B12-HV200-A2C	2		
48	9 308 003 020	1	washer DIN9021 DIN 9021-B10.5x30x2.5	4		
49	000 962 02 49		cover	2		
51	350 610 08 03		panelling rear assy.	1		H12/H16 for tail light
51	350 610 08 04		panelling rear assy.	1		H18/H20 for tail light
51	350 610 08 06		panelling rear assy.	1		H12/H16
51	350 610 08 07		panelling rear assy.	1		H18/H20
52	9 008 311 236	1	hexagon head screw ISO 4017 M10x20-8.8-A2C	2		

1 = Packaged quantities 2 = Restricted availability 3 = Parts being phased out 4 = not available individually 5 = see separate list

https://truckmanualshub.com/

HOOD AND COVERINGS

Pos.	Part-No.	I	Designation	Qantity	replaced by	Remarks
53	9 291 003 020	1	washer DIN 125 B10,5x20x2-HV200-A2C	2		
56	350 430 14 05		coverplate assy.	1		
57	000 962 50 05		locking cap	1		
58	000 962 01 03		pipe plug WN 17253 WN 17253-10,9x9,5	2		
70	000 964 12 02		profile	1		
71	350 616 44 01		rubber mat	1		
72	350 616 05 01		angle	1		
73	9 292 003 014	1	washer ISO 7089 A6,4-ST50-A2C	2		
78	000 918 53 14	3	shackle	1	350 571 23 00	particle filter
78	350 571 23 00		plate joining	1		particle filter
79	9 008 311 132	1	hexagon head screw ISO 4017 M6x20-8.8-A2C	2		=>|05/2002 particle filter
79	9 008 311 140	1	hexagon head screw ISO 4017 M6x40-8.8-A2C	2		06/2002 |=> particle filter
80	9 292 003 014	1	washer ISO 7089 A6,4-ST50-A2C	4		particle filter
81	9 210 281 090	1	hexagon nut ISO 4032 DIN 934-M6-8A2C	2		particle filter
83	000 964 65 45		plate	1		
84	000 936 26 16		tension locking	1		
	000 936 22 00		cylinder	1		
85	000 973 04 41		key (single)	1		
86	000 918 00 91		plate	1		
87	9 048 318 129		socket-head screw DIN 7984 DIN 7984-M6x16-8,8A2R	3		
88	350 430 26 02		angle assy.	1		=>| 03/2002
88a	350 432 13 15		angle	1		04/2002 |=>
89	9 309 412 020	1	washer DIN 7349 DIN 7349-10,5x25x4	1		=>| 03/2002
90	9 008 311 241	1	hexagon head screw ISO 4017 M10x30-8.8-A2C	1		=>| 03/2002
91	350 432 08 02		cover sheet	1		
	350 430 95 00		kit expansion	1		

1 = Packaged quantities 2 = Restricted availability 3 = Parts being phased out 4 = not available individually 5 = see separate list

https://truckmanualshub.com/

Pos.	Part-No.	I	Designation	Qantity	replaced by	Remarks
92	000 916 07 11		bush sleeve	2		particle filter
93	000 962 65 01		plug pipe WN 17253 H8.5X2-BLACK	2	000 962 65 04	=>| 06/2002
93	000 962 65 04		pipe plug WN 17253 H11.5-4Xblack	2		07/2002 |=>
94	9 008 311 135	1	hexagon head screw ISO 4017 M6x25-8.8-A2C	2		
95	000 964 19 02		edge protection 9,5x1145	1	000 964 05 10	
95	000 964 05 10		edge protection 1165 mm	1		

1 = Packaged quantities 2 = Restricted availability 3 = Parts being phased out 4 = not available individually 5 = see separate list

https://truckmanualshub.com/

https://truckmanualshub.com/

DAMPING MATS

03

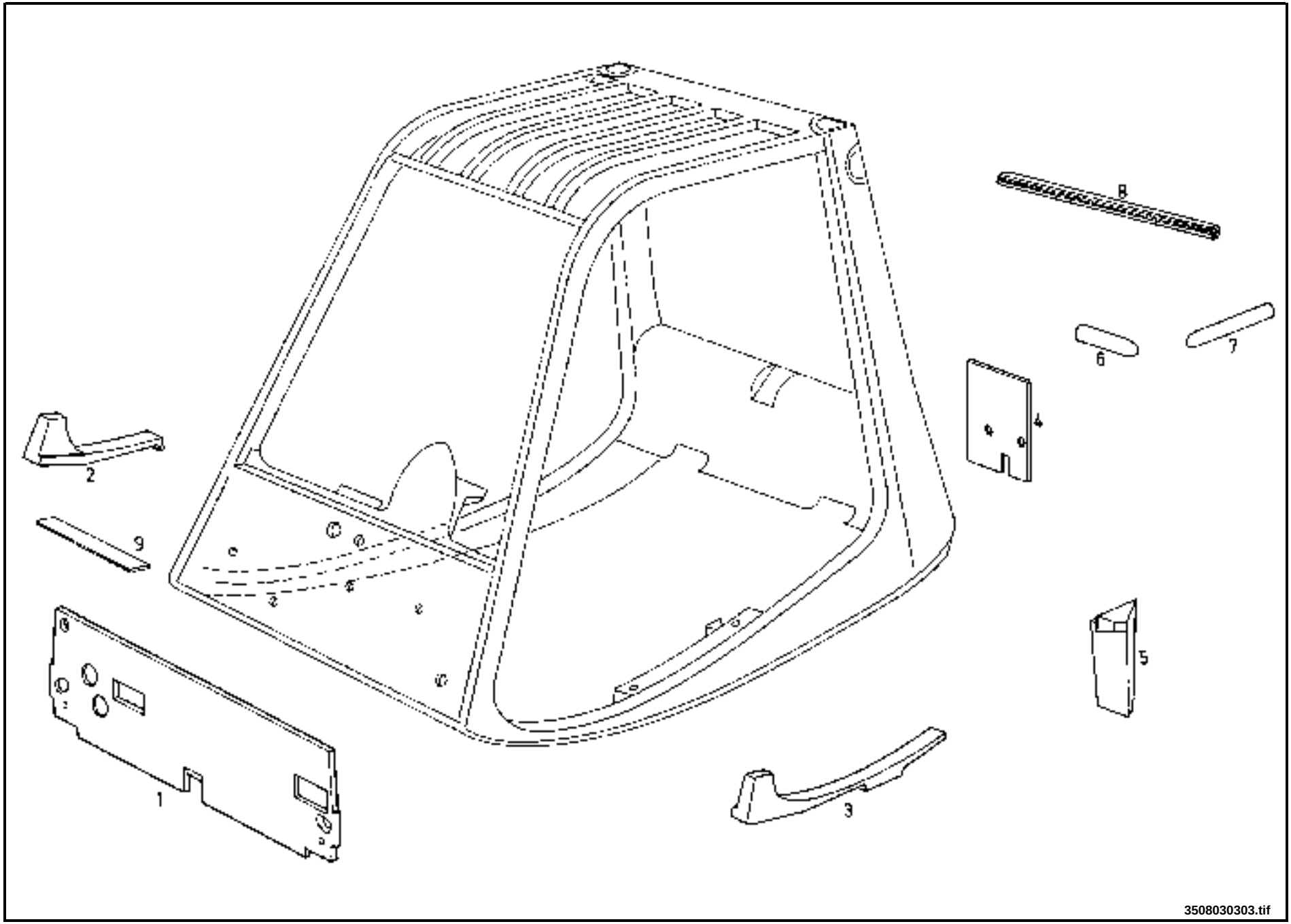

https://truckmanualshub.com/

DAMPING MATS

Pos.	Part-No.	I	Designation	Qantity	replaced by	Remarks
1	350 432 05 09		damping mat	1		
2	350 432 24 05		panelling	1		
3	350 432 24 10		panelling	1		
4	350 432 05 06		damping mat	1		
5	000 964 18 99		rubber profile	1		
6	000 964 18 11		sectional clamping strip	1		
7	000 964 18 24		sectional clamping strip	1		
8	000 964 12 73		sealing profile	1		
9	350 432 05 12		damping mat	1		heating

1 = Packaged quantities 2 = Restricted availability 3 = Parts being phased out 4 = not available individually 5 = see separate list

https://truckmanualshub.com/

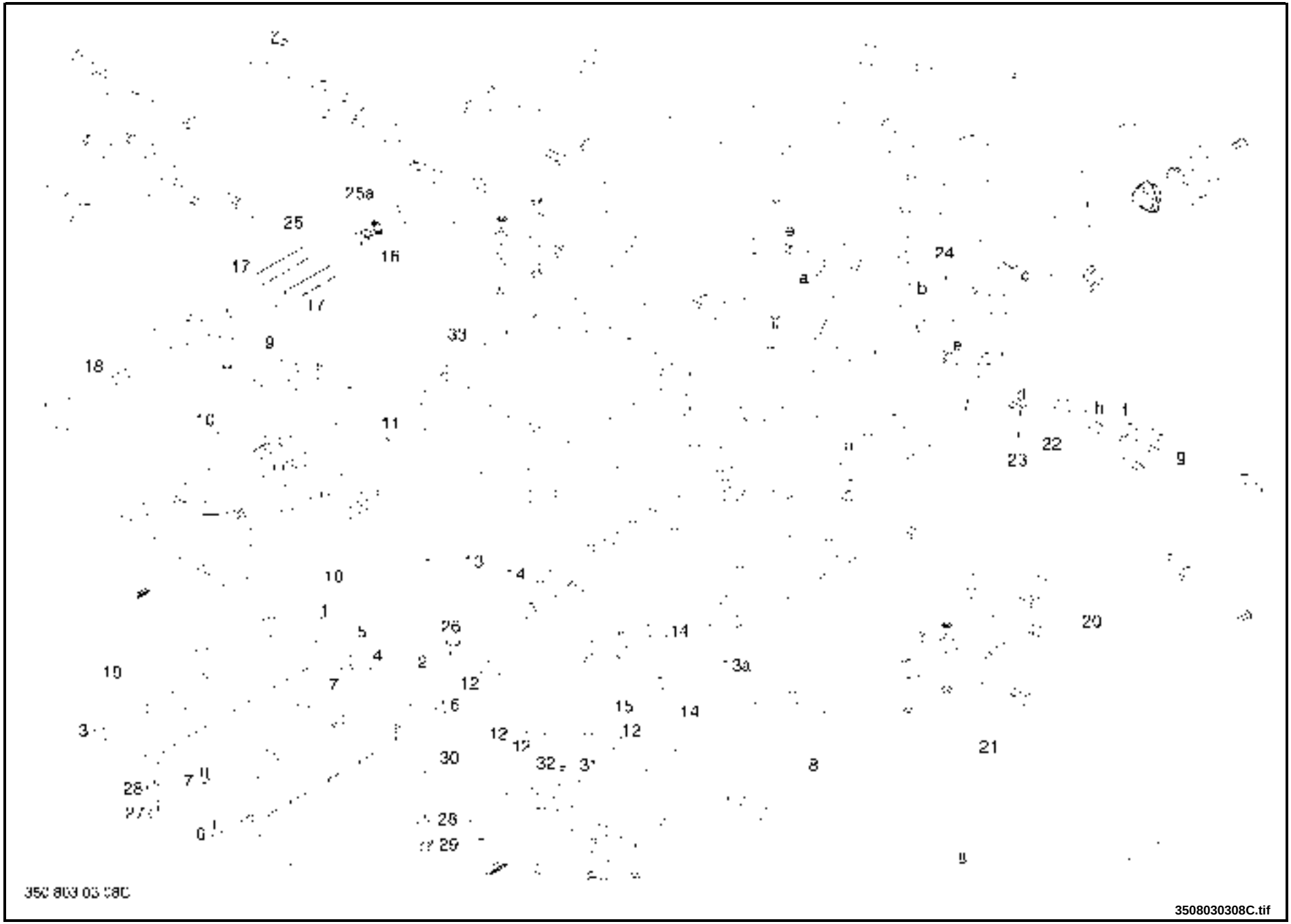

https://truckmanualshub.com/

DRIVER'S SEAT

Pos.	Part-No.	I	Designation	Qantity	replaced by	Remarks
	351 433 10 16		seat. (standard)	1		imitation leather covering
	350 433 10 06		drivers seat	1		imitation leather covering with seat switch
	351 433 10 17		seat. (comfort)	1		with fabric couvering version
	350 433 10 07		driver seat comfort with switch	1		with fabric couvering version with seat switc
1	351 433 18 01		seat guide	1		
2	351 433 18 02		seat guide	1		
3	351 433 05 01		angle	1		
4	9 294 428 018	1	washer DIN 433 8.4x15x1.6-433-St	4		
5	000 903 17 03		knurled screw	1		
6	9 045 316 175		socket-head screw ISO 4762 M8x12-8.8-A2C	3		
7	9 045 311 177		socket-head screw ISO 4762 M8x16-8.8-A2C	1		
8	351 433 75 00		shock absorber	1		
	351 433 07 00		hexagonal bolt	1		
	9 460 620 050		retaining clip DIN 6799	2		
9	351 433 73 00		forks assembly	1		
10	000 964 01 25		bumper	2		
11	000 964 01 09		bumper rubber	1		
12	000 993 36 74		roller	4		
13	351 433 07 10		bolt	1		
13a	351 433 07 05		bolt	1		
14	351 433 42 00		bush	4		
15	351 433 12 01		rocker arm	1		
16	000 924 70 43		cylindrical roller bearing	1		
17	000 922 46 61		tension spring	2		
18	330 433 13 00		spindle adjusting	1		
19	000 993 36 94		roller	1		

1 = Packaged quantities 2 = Restricted availability 3 = Parts being phased out 4 = not available individually 5 = see separate list

https://truckmanualshub.com/

Pos.	Part-No.	I	Designation	Qantity	replaced by	Remarks
20	351 433 80 02		backrest pad	1		for 351.433.10.16
20	351 433 80 04		backrest pad	1		for 351.433.10.17
21	351 433 80 03		seat pad (pvc)	1		for 351.433.10.16
21	351 433 80 05		seat pad	1		for 351.433.10.17
22	351 433 66 01		lever	1		
23	351 433 14 00		handle	1		
24	351 433 42 01		bush	1		
25	351 433 85 01	3	seat belt	1	392 433 85 00	
25a	392 433 85 00		seat belt	1		
26	9 008 311 186	1	hexagon head screw ISO 4017 M8x30-8.8-A2C	5		
27	9 008 311 183	1	hexagon head screw ISO 4017 M8x25-8.8-A2C	1		
28	9 308 003 018	1	washer ISO 7093-1 8-200HV-A2C	6		
29	9 210 281 110	1	nut ISO 4032 934-M8-8A2C	6		
30	000 918 95 01		plate joining	2		
31	7 9154 99 909		seat switch	1		seat switch
32	9 424 700 248	1	rivet blind DIN 7337	4		
33	337 433 56 00		covering suspension(bellows)	1		
	351 433 90 00		kit seat lever	1		= pos. a-h,22-24

1 = Packaged quantities 2 = Restricted availability 3 = Parts being phased out 4 = not available individually 5 = see separate list

https://truckmanualshub.com/

https://truckmanualshub.com/

DRIVER'S SEAT

03

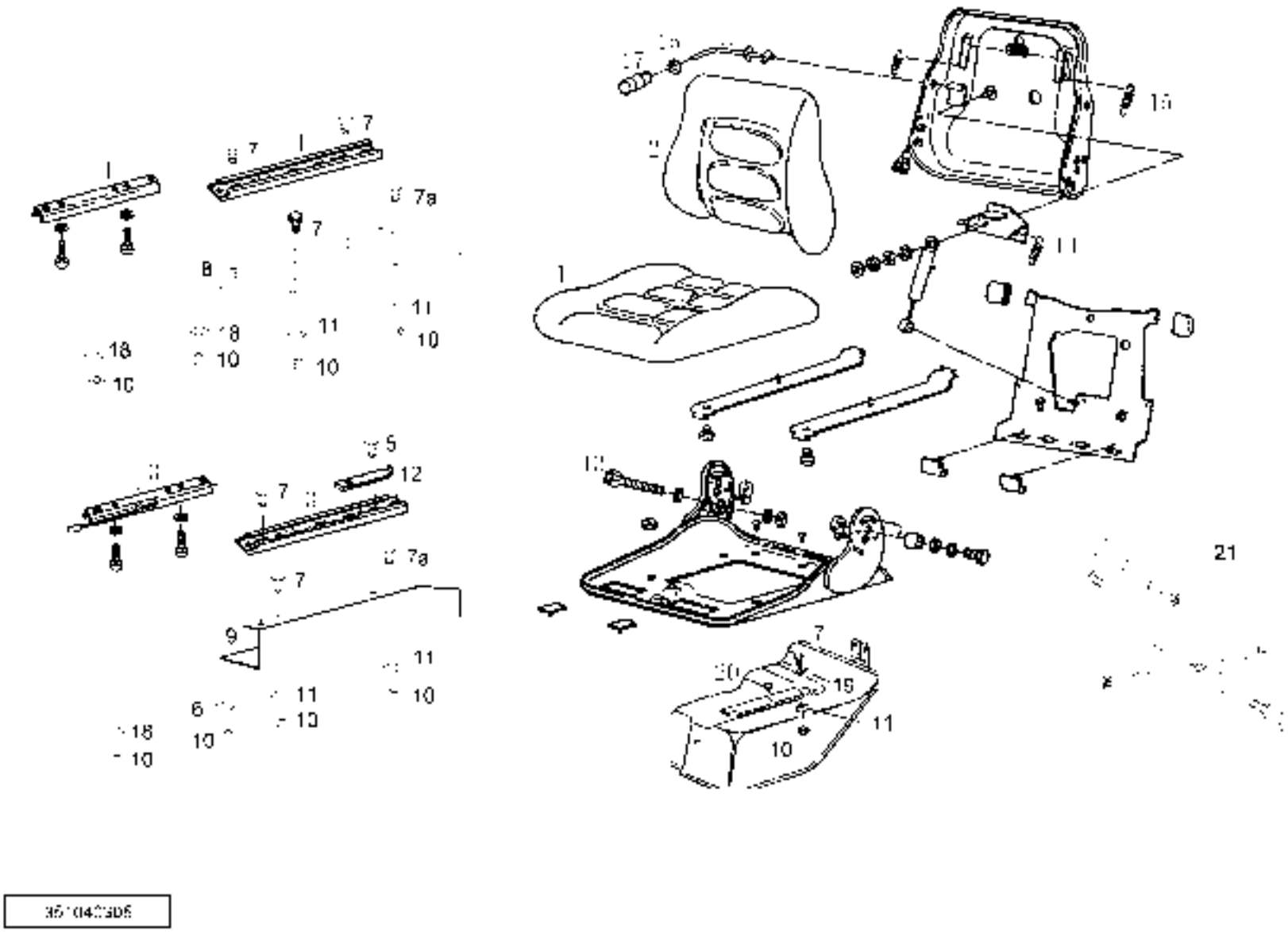

351040305.tif

https://truckmanualshub.com/

DRIVER'S SEAT

Pos.	Part-No.	I	Designation	Qantity	replaced by	Remarks
	350 433 10 04		driver seat	1		version GS12 without switch + seat belt
1	324 433 26 11		upholstery	1		
2	324 433 26 15		backrest pad	1		
3	351 433 18 20		seat guide	1		
4	351 433 18 15		seat guide	1		
5	9 008 311 177	1	hexagon head screw ISO 4017 M8x16-8.8-A2C	1		
6	9 323 620 018	1	spring washer DIN 137 DIN 137-B8-A2C	1		
7	9 008 311 180	1	hexagon head screw ISO 4017 M8x20-8.8-A2C	7		
7a	9 008 311 183	1	hexagon head screw ISO 4017 M8x25-8.8-A2C	2		
8	351 433 34 00		console	1		
9	351 433 34 01		console	1		
10	9 210 281 110	1	nut ISO 4032 934-M8-8A2C	12		
11	9 308 003 018	1	washer ISO 7093-1 8-200HV-A2C	8		
12	322 433 03 00		stop (limit block)	1		
13	324 433 13 05		adjusting spindle	1		
14	000 922 46 44		tension spring	1		
15	000 922 46 45		tension spring	2		
16	324 433 66 00		lever	1		
17	324 433 14 00		handle	1		
18	9 309 412 018	1	washer DIN 7349 DIN 7349-8.4x21x4,8A2C	3		
19	9 292 003 018	1	washer DIN 125 DIN 125-A8,4x16x1,6-A2C	4		
20	000 962 01 00		plug WN 17253 8.8X9.5	2		
21	351 433 85 00		lap belt retrofit kit	1		

1 = Packaged quantities 2 = Restricted availability 3 = Parts being phased out 4 = not available individually 5 = see separate list

https://truckmanualshub.com/

DRIVER'S SEAT

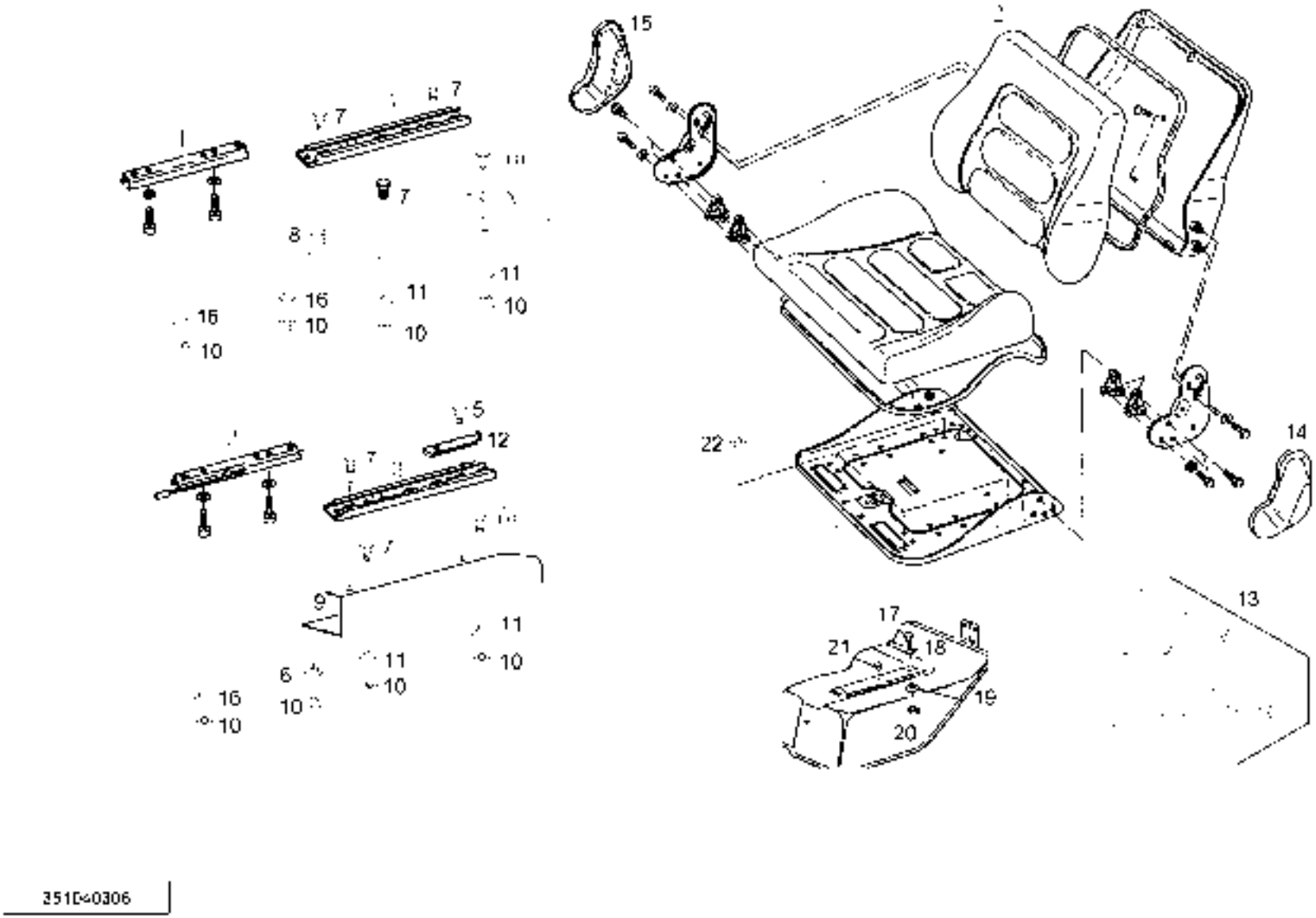

351040306.tif

https://truckmanualshub.com/

DRIVER'S SEAT

Pos.	Part-No.	I	Designation	Qantity	replaced by	Remarks
	351 433 10 49		*****	1		rear screen protection cab + seat belt
1	-		seat pad	1		=pos.1-4,14-22
2	-		backrest pad	1		
3	-		rail guide	1		left
4	-		rail guide	1		
5	9 008 311 177	1	hexagon head screw ISO 4017 M8x16-8.8-A2C	1		
6	9 323 620 018	1	spring washer DIN 137 DIN 137-B8-A2C	1		
7	9 008 311 180	1	hexagon head screw ISO 4017 M8x20-8.8-A2C	5		
7a	9 008 311 183	1	hexagon head screw ISO 4017 M8x25-8.8-A2C	2		
8	350 433 34 00		*****	1		
9	350 433 34 01		*****	1		
10	9 210 281 110	1	nut ISO 4032 934-M8-8A2C	8		
11	9 308 003 018	1	washer ISO 7093-1 8-200HV-A2C	4		
12	322 433 03 00		stop (limit block)	1		
13	351 433 85 01		seat belt	1		
14	-		covering	1		right
15	-		covering	1		left
16	9 309 412 018	1	washer DIN 7349 DIN 7349-8.4x21x4,8A2C	3		
17	9 008 311 180	1	hexagon head screw ISO 4017 M8x20-8.8-A2C	2		
18	9 292 003 018	1	washer DIN 125 DIN 125-A8,4x16x1,6-A2C	2		
19	9 308 003 018	1	washer ISO 7093-1 8-200HV-A2C	2		
20	9 210 281 110	1	nut ISO 4032 934-M8-8A2C	2		
21	000 962 01 00		plug WN 17253 8.8X9.5	2		
22	9 210 281 110	1	nut ISO 4032 934-M8-8A2C	4		

1 = Packaged quantities 2 = Restricted availability 3 = Parts being phased out 4 = not available individually 5 = see separate list

https://truckmanualshub.com/

DRIVER'S SEAT VERSION CONTAINER

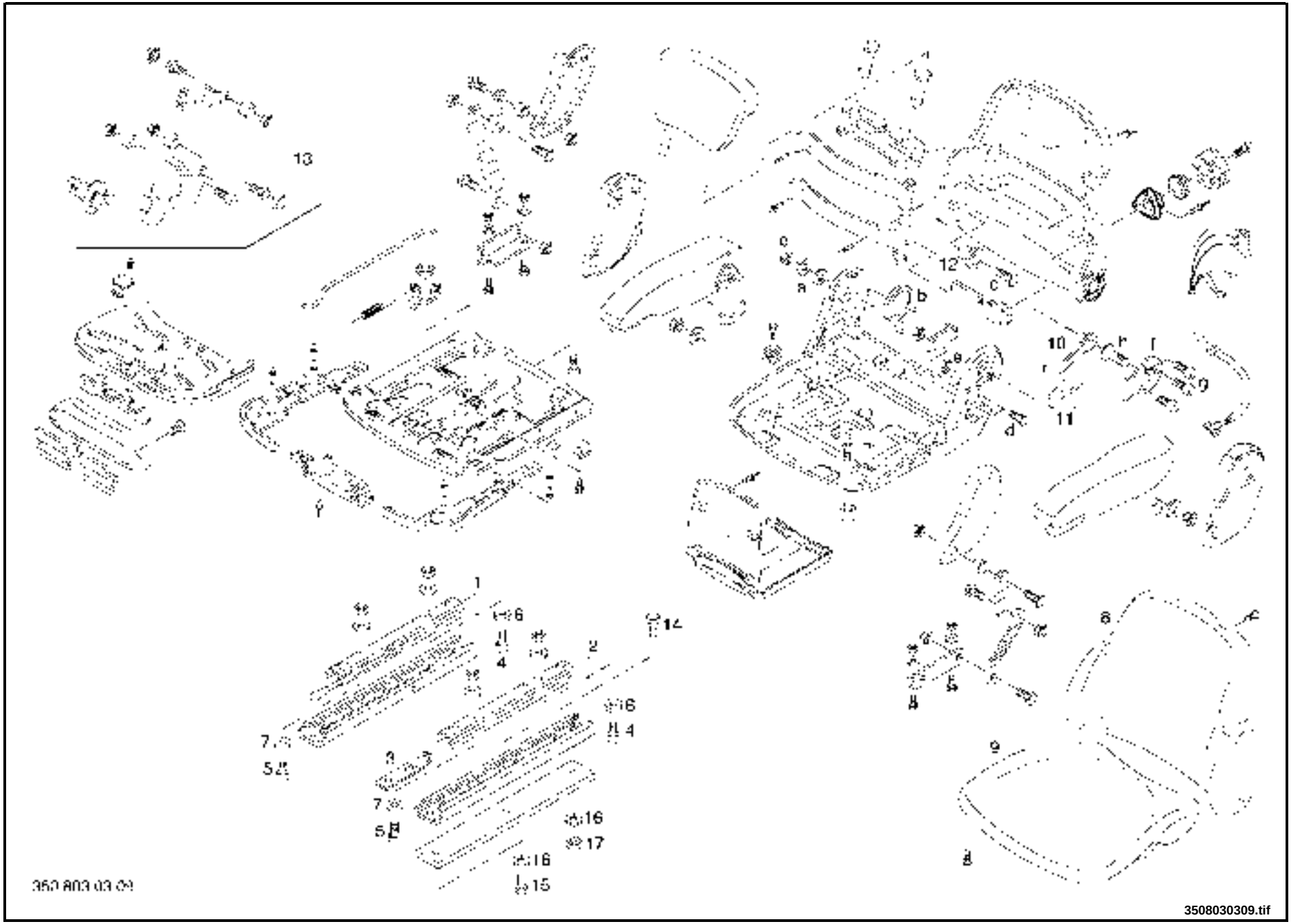

https://truckmanualshub.com/

DRIVER S SEAT VERSION CONTAINER

Pos.	Part-No.	I	Designation	Qantity	replaced by	Remarks
	351 433 10 18		seat drivers	1		imitation leather covering
	351 433 10 22		seat	1		with fabric couvering version
1	351 433 18 02		seat guide	1		
2	351 433 18 01		seat guide	1		
3	351 433 05 01		angle	1		
4	9 045 311 180	1	socket-head screw ISO 4762 M8x20-8.8-A2C	1		
5	9 045 311 177	1	socket-head screw ISO 4762 M8x16-8.8-A2C	3		
6	000 903 17 03		knurled screw	1		
7	000 914 58 10		supporting disc	7		
8	351 433 80 02		backrest pad	1		for 351.433.10.18
8	351 433 80 04		backrest pad	1		for 351.433.10.22
9	351 433 80 03		seat pad (pvc)	1		for 351.433.10.18
9	351 433 80 05		seat pad	1		for 351.433.10.22
10	351 433 66 01		lever	1		
11	351 433 14 00		handle	1		
12	351 433 42 01		bush	1		
13	351 433 85 01		seat belt	1		
14	9 008 311 186	1	hexagon head screw ISO 4017 M8x30-8.8-A2C	5		
15	9 008 311 183	1	hexagon head screw ISO 4017 M8x25-8.8-A2C	1		
16	9 308 003 018	1	washer ISO 7093-1 8-200HV-A2C	6		
17	9 210 281 110	1	nut ISO 4032 934-M8-8A2C	6		
	351 433 90 00		kit seat lever	1		= pos. a-h,10-12

1 = Packaged quantities 2 = Restricted availability 3 = Parts being phased out 4 = not available individually 5 = see separate list

https://truckmanualshub.com/

DRIVER'S CAB

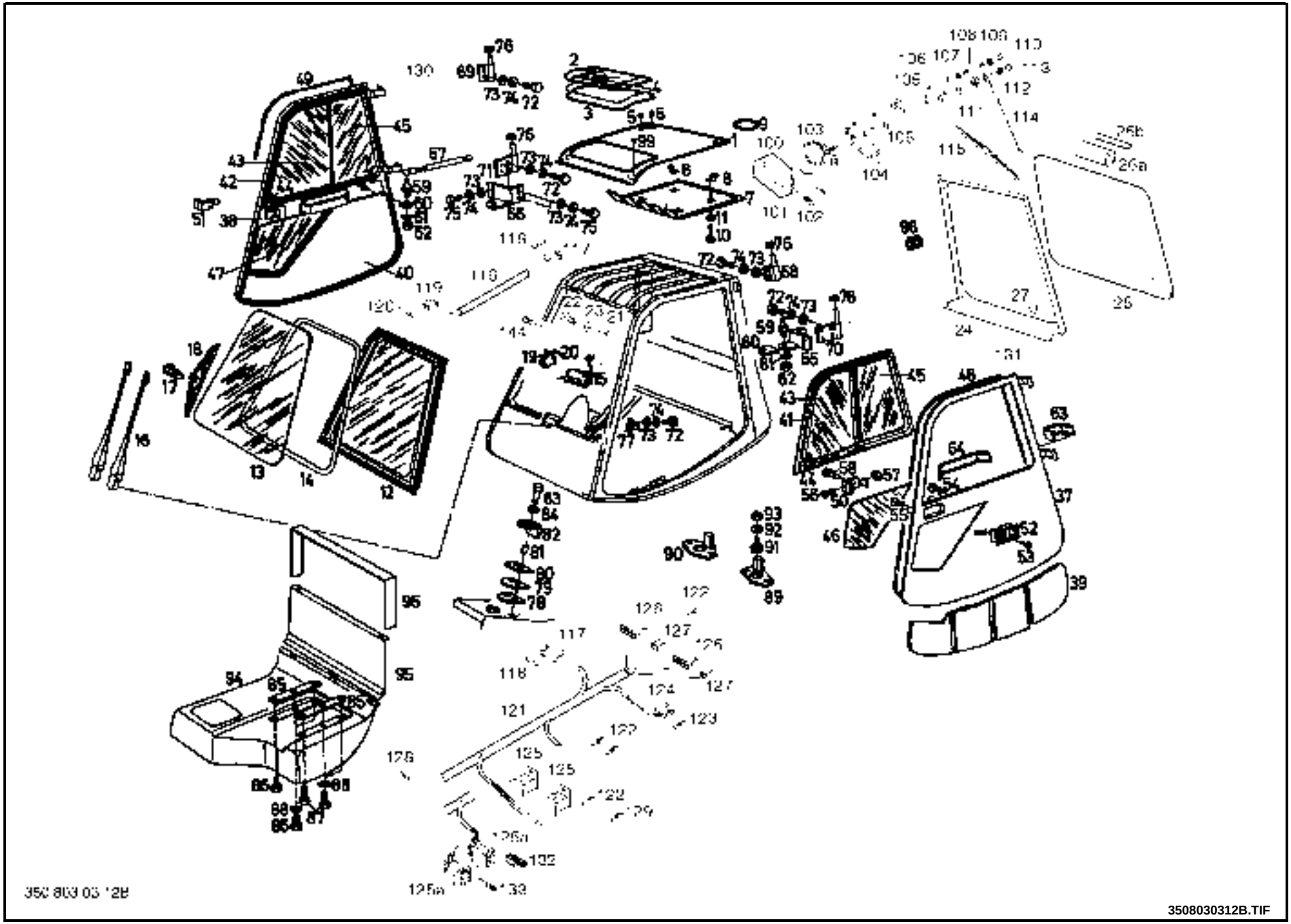

https://truckmanualshub.com/

Pos.	Part-No.	I	Designation	Qantity	replaced by	Remarks
	350 430 65 15		roof with lining	1		= pos. 1-11
	350 430 65 35		weather protection cab assy.	1		= pos. 1-11
	350 430 65 20		frame	1		= pos. 12-14
	350 430 65 25		frame rear with pane	1		= pos. 24-27
	350 430 65 30		cab weather protection 3.stage	1		= pos. 37-64,94,95
	350 430 65 15		roof with lining	1		
1	350 437 91 03		roof	1		= pos. 1-6
2	351 437 90 10		roof glass	1		for 350.430.65.15
2	350 437 63 00		roof pane	1		for 350.430.65.35
3	000 964 18 32		sectional clamping strip	1		
4	000 964 18 33		rubber profile	1		
5	000 962 01 89		pipe plug	4		
6	000 962 01 87	3	pipe plug A7	8	000 962 03 05	
6	000 962 03 05		stopper	8		
	000 964 55 04		ADHESIVE STRING 8x2500	1		
	7 3792 00 155		adhesive SEALANT TEROSTAT 935 (BLACK)	1		
7	350 437 92 00		lining	1		
8	351 437 73 00		angle	4		
9	000 964 20 00		ring rubber	2		
10	9 116 604 380		sheet metal screw ISO 7051 7983-4,8x22A2C	4		
11	000 914 76 46		washer	4		
12	350 430 65 20		frame	1		
13	350 437 90 00		window panel	1		
14	000 964 18 30		strip retaining	1		
15	000 973 40 69		wiper motor 12V 60°	1		
16	000 973 40 95	3	parallel wiper arm 650mm/C12xM8	1	000 973 42 06	
16	000 973 42 06		wiper arm 650 mm/C12xM8	1		

1 = Packaged quantities 2 = Restricted availability 3 = Parts being phased out 4 = not available individually 5 = see separate list

https://truckmanualshub.com/

Pos.	Part-No.	I	Designation	Qantity	replaced by	Remarks
17	000 973 40 85		slider	1		
18	000 973 40 96		wiper blade 600mm	1		
19	000 973 26 20		switch toggle	1		
20	000 938 35 48		symbol insrt INT.WIPER '14X14	1		for 000.973.26.20
20	000 938 35 49		symbol insert R/W W/WIPER	1		for 000.973.26.20
	000 955 30 30		tie cable 6,3x4,8x198-SW	2	000 955 30 68	
	000 955 30 68		cable tie 4.6x205	2		
	000 964 55 06		RB 7378000021 073819 1989	1		
	7 3792 00 155		adhesive SEALANT TEROSTAT 935 (BLACK)	1		
21	000 931 01 22		handle	1	000 931 01 00	including: 1x 9.062.316.180 1x 350.808.23.37
21	000 931 01 00		bracket	1		assembly with Pos. 144
22	9 008 311 177		hexagon head screw ISO 4017 M8x16-8.8-A2C	2		=>| 01/2005
23	9 294 003 018		washer DIN 433 DIN 433-8,4-ST50-A2C	2		=>| 01/2005
24	350 430 65 17		frame rear with pane	1		= pos. 25-27
25	350 437 90 09		rear window	1		
26a	000 964 19 64		sectional clamping strip	1		
26b	000 964 19 65		strip retaining	1		
27	000 962 01 89		pipe plug	1		
	000 964 55 08		SEALING STRIP 8x2150	1		
	7 3792 00 155		adhesive SEALANT TEROSTAT 935 (BLACK)	1		
	350 430 65 30		cab weather protection 3.stage	1		
37	350 437 91 01		door left	1		= pos. 39,41,43-46,48,50,52-64
	000 936 01 60		hinge left links	2		for pos. 37
38	350 437 91 02		door	1		= pos. 40,42,43-45,47,49,51-64
	000 936 01 61		hinge right rechts	2		to pos. 38
39	350 437 92 01		lining left	1		

1 = Packaged quantities 2 = Restricted availability 3 = Parts being phased out 4 = not available individually 5 = see separate list

https://truckmanualshub.com/

Pos.	Part-No.	I	Designation	Qantity	replaced by	Remarks
40	350 437 92 02		lining right	1		
41	350 437 90 02		sliding window left	1		
42	350 437 90 03		window	1		
43	350 437 90 06		sliding pane	2		
	322 437 82 00		guide rail	2		
	322 437 85 00		cross bar	2		
	000 964 13 89		brush device	2		
44	000 931 10 13		notched handle	2		
45	350 437 90 07		pane	2		
46	350 437 90 04		pane door	1		left
47	350 437 90 05		pane door	1		right
48	000 964 11 19		sealing profile left	1		
49	000 964 11 25		sealing profile right	1		
50	000 931 10 11		door lock left (marked r)	1		
51	000 931 10 10		door lock right (marked l)	1		
52	000 931 01 03		handle cover	2		
53	000 973 04 38		key	2		
54	9 060 101 102	1	countersunk screw DIN 965 965-M5x20-4.8A2C	2		
55	9 051 201 098	1	countersunk screw DIN 963 963-M5x16-4.8A2C	4		
56	9 060 101 137	1	countersunk screw DIN 965 965-M6x30-4.8A2C	4		
57	9 210 281 090	1	hexagon nut ISO 4032 DIN 934-M6-8A2C	2		
58	9 087 101 132	1	screw pan head ISO 7045 M6X20-7985-4.8A2R	4		
59	000 934 16 02		ball joint	4		
60	351 437 95 00		coating	4		
61	9 330 620 018	1	washer lock serrated DIN 6798 6798-A8,4-PHR	4		
62	9 210 281 110	1	nut ISO 4032 934-M8-8A2C	4		
63	000 964 11 16		hinge cover	4		

1 = Packaged quantities 2 = Restricted availability 3 = Parts being phased out 4 = not available individually 5 = see separate list

https://truckmanualshub.com/

Pos.	Part-No.	I	Designation	Qantity	replaced by	Remarks
64	000 964 18 34		hand rail section 360mm	2		
65	350 437 62 00		support left	1		
66	350 437 62 01		support right	1		
67	000 921 91 68		gas spring	2		
68	000 936 01 06		hinge	1		
69	000 936 01 07		hinge	1		
70	000 936 01 08		hinge	1		
71	000 936 01 09		hinge	1		
72	9 008 311 183	1	hexagon head screw ISO 4017 M8x25-8.8-A2C	20		
73	9 292 003 018	1	washer DIN 125 DIN 125-A8,4x16x1,6-A2C	24		
74	9 321 620 018	1	spring washer DIN 127 DIN 127-B8	24		
75	9 008 311 177	1	hexagon head screw ISO 4017 M8x16-8.8-A2C	8		
76	000 914 12 16	1	washer	4		
77	351 437 50 00		cotter pin	2		
78	000 918 00 17		plate	2		
79	351 437 74 00		plate	a.req.		t= 1 mm
79	000 918 00 17		plate	a.req.		t= 4 mm
79	000 918 00 42		plate	a.req.		t= 6 mm
80	000 964 10 94		rubber stop	2		
81	000 916 10 80		bush 10.5X18X34	4		
82	351 437 78 00		limit block	2		
82	350 437 78 10		stop (limit block)	1		heating
83	9 007 311 250	1	hexagon head bolt ISO 4014 M10x70-8.8-A2C	4		
84	9 309 412 020	1	washer DIN 7349 DIN 7349-10,5x25x4	4		
85	350 433 23 00	1	latch	2		
86	9 008 311 186	1	hexagon head screw ISO 4017 M8x30-8.8-A2C	5		
87	9 008 311 188	1	hexagon head screw ISO 4017 M8x35-8.8-A2C	3		deleted

1 = Packaged quantities 2 = Restricted availability 3 = Parts being phased out 4 = not available individually 5 = see separate list

https://truckmanualshub.com/

Pos.	Part-No.	I	Designation	Qantity	replaced by	Remarks
88	9 308 003 018	1	washer ISO 7093-1 8-200HV-A2C	4		deleted
89	350 430 22 05		two-bolt flange assy.	1		
90	350 430 22 00		two-bolt flange assy.	1		
91	000 965 25 15		rubber buffer DM10x12	2		
92	9 309 412 020	1	washer DIN 7349 DIN 7349-10,5x25x4	2		
93	9 210 281 130	1	nut hexagon ISO 4032 DIN 934-M10-8A2C	2		
94	350 432 45 04		panelling	1		
95	350 432 45 03		panelling	1		
96	350 432 45 02		panelling	1		
98	000 964 03 05		cable grommet 11.5X7.5X1.5	1		
99	000 962 65 00		pipe plug WN 17253	4		
100	335 363 18 10	3	cover sheet	1	335 363 17 11	
100	335 363 17 11		protective cover	1		
101	9 309 412 010	1	washer DIN 7349 4,3x12x1,6 A2C	2	000 962 50 12	=>| 01/2001
102	9 186 353 235	1	tapping screw 3,5x8-10.9-A2K	2	000 962 50 12	=>| 01/2001
102	000 962 50 12		rivet	2		02/2001 |=>
103	000 973 41 10		wiper motor 12V 80°	1		
104	335 430 14 04		coverplate assy.	1		
105	335 363 25 05		plate	2		
106	335 363 25 04		plate	1		
107	9 292 003 014		washer ISO 7089 A6,4-ST50-A2C	2		
108	9 123 316 135	1	stud threaded DIN 938 M6X25-938-8.8A2C	2		
109	9 210 281 090	1	hexagon nut ISO 4032 DIN 934-M6-8A2C	2		
110	000 964 37 32		cap protective SW10	2		
111	000 904 60 51		nut M14x1-A2C	1		
112	9 214 317 090	1	nut hexagon ISO 7042 M6-8-A2C	1		
113	000 962 50 50		cap	1		

1 = Packaged quantities 2 = Restricted availability 3 = Parts being phased out 4 = not available individually 5 = see separate list

https://truckmanualshub.com/

Pos.	Part-No.	I	Designation	Qantity	replaced by	Remarks
114	000 973 41 15		wiper arm 350mm/A8xM6	1		
115	000 973 41 12		wiper blade 400mm/H9x2,5	1		
116	352 381 03 46		harness	1		windscreen wiper rear
117	000 975 17 18		housed mounting 3P	1		
118	7 9125 03 150		bush	a.req.		
119	000 975 17 17		plug housing 3-P	1		
120	7 9125 03 104		pin 1,5-2,5	a.req.		
121	350 381 03 36		harness	1		windscreen wiper front/rear
122	7 9125 11 315		connecting bush DIN 46340	a.req.		
123	7 9125 11 303		faston DIN 46340	a.req.		
124	7 9125 15 510		housing	1		
125	7 9162 99 961		base	2		=>| 06/2002
125a	7 9125 03 923		base	2		07/2002 |=>
126	000 975 17 47		socket housing	2		
127	000 975 17 65		socket housing 2-polig	2		
128	7 9125 00 249		connector DIN 46225	a.req.		
129	7 9125 11 308		receptacle faston DIN 46340 B2,8-1 Ms	a.req.		
130	000 936 01 61		hinge right rechts	2		
131	000 936 01 60		hinge left links	2		
132	000 975 26 07		support	2		07/2002 |=>
133	7 9125 03 035		contact	a.req.		
133	7 9125 03 044		contact	a.req.		
133	7 9125 03 036		contact	a.req.		
144	9 062 316 180	1	countersunk screw ISO 10642 M8x20-8.8-A2C	2		02/2005 |=>

1 = Packaged quantities 2 = Restricted availability 3 = Parts being phased out 4 = not available individually 5 = see separate list

https://truckmanualshub.com/

https://truckmanualshub.com/

HEATER =>I 05/2002

03

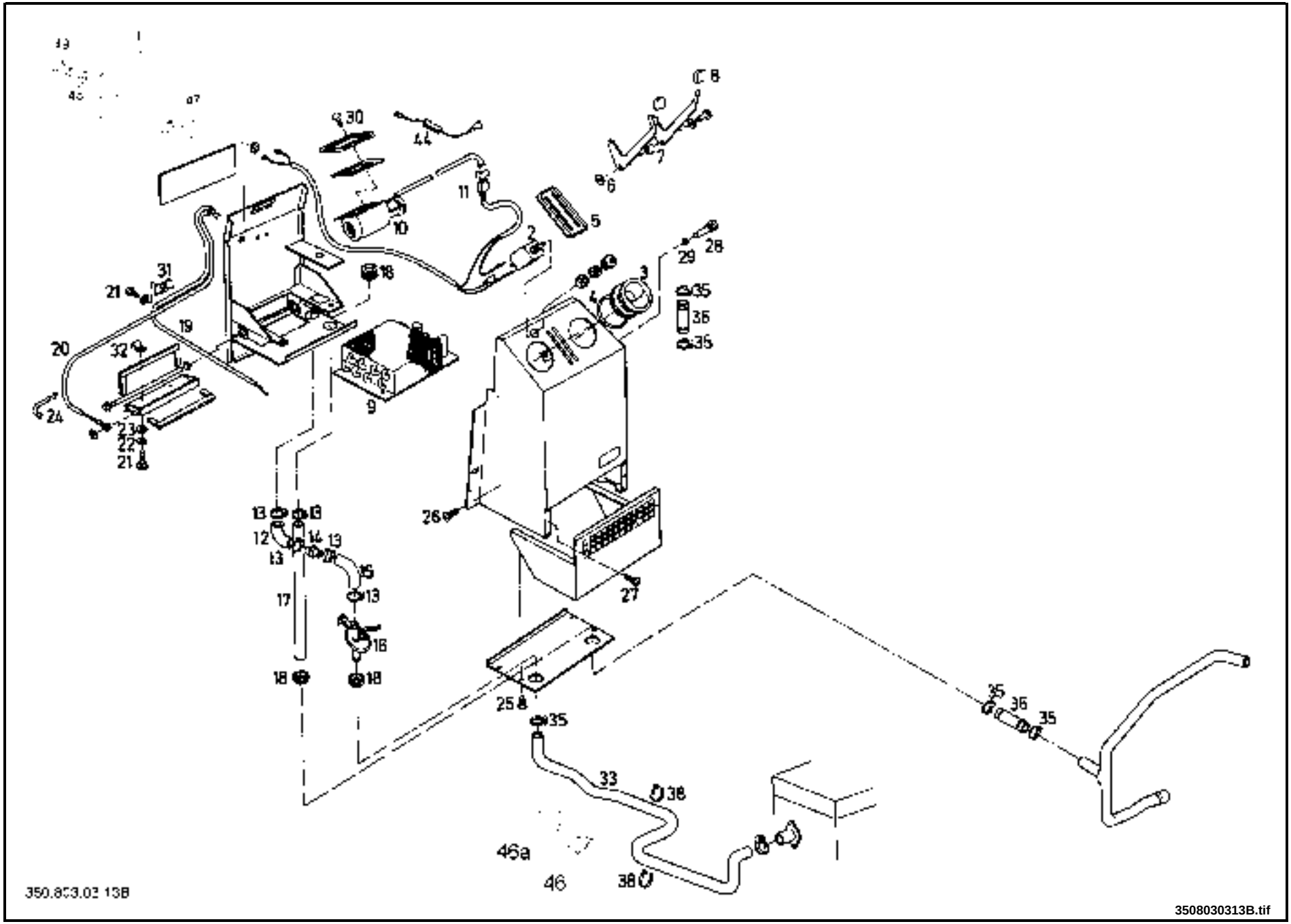

https://truckmanualshub.com/

HEATER =>I 05/2002

Pos.	Part-No.	I	Designation	Qantity	replaced by	Remarks
	350 584 01 01	3	heater	1	350 584 01 02	= pos.2-32,44
1	350 432 08 03	3	cover sheet	1	350 432 08 04	
1	350 432 08 04		cover	1		
	000 962 65 01		plug pipe WN 17253 H8.5X2-BLACK	2		for 350.432.08.04
2	000 973 29 28		switch	1		
3	352 584 17 00		jet duct nozzle	2		
4	000 963 05 04		o ring 50x2-V80	2		
5	000 938 18 98		label	1		
6	000 914 76 60		washer	2		
7	000 916 96 02		bush	1		
8	000 932 15 00		button	2		
9	350 584 03 00		heat exchanger	1		
10	000 981 18 01		fan	1		
11	352 381 03 02		harness	1		
11	352 381 03 03		harness	1		
12	000 957 90 60		hose	1		
13	000 955 20 36		clip hose DIN 3017 A20-32x13-W2	5		
14	000 951 72 02		section middle	1		
15	000 957 90 26		hose	1		
16	000 945 01 12		thermostat	1		
17	000 957 90 27		inner tube DIN 73411	1		
18	000 964 03 14		ring rubber 30/25x8	4		
19	000 935 08 01		pulley	1		
20	000 935 08 02		pulley	1		
21	9 041 201 098	1	socket-head screw ISO 1207 DIN 84-AM5X16-4.8A2C	3		
22	9 321 620 012	1	spring washer DIN 127 B5-A2C	2		
23	9 309 412 012	1	washer DIN 7349 DIN 7349-5,3-ST-A2A	2		

1 = Packaged quantities 2 = Restricted availability 3 = Parts being phased out 4 = not available individually 5 = see separate list

https://truckmanualshub.com/

Pos.	Part-No.	I	Designation	Qantity	replaced by	Remarks
24	000 931 40 04		clamp	1		
25	9 087 101 063	1	button head screw ISO 7045 M4x8-4.8-A2C	4		
26	9 051 201 095	1	countersunk screw DIN 963 963-M5x10-4.8A2c	4		
27	9 093 003 066	1	tapping screw DIN 7513 BE M4x12-A2C	2		
28	7 9160 01 748	1	fuse DIN 41662 T5,0	1		
29	350 584 16 01		support	1		
30	9 113 604 324	1	sheet metal screw ISO 7049 7981-C4-2x9,5A2C	4		
31	000 955 50 29		clip	1		
32	9 758 003 602		clip DIN 72571 1-6-W1-2	2		
33	350 584 35 03		hose formed	1		
35	000 955 20 36		clip hose DIN 3017 A20-32x13-W2	2		
36	000 964 16 03		pipe	1		
37	350 584 08 00		t-piece	1		LPG
38	000 955 20 37		cable tie 9X350 BLACK	3		
44	352 381 03 03		harness	1		
45	000 962 02 58		plug	2		
46	000 955 30 13		clamp	2		
46a	000 955 30 15		cable clip.	2		
47	000 955 08 01		clip DIN 3015 12 diam double	2		
48	9 292 003 014	1	washer ISO 7089 A6,4-ST50-A2C	2		for 350.432.08.03
48	9 307 003 014	1	washer DIN 9021 B6,4-ST-A2C	2		for 350.432.08.04
49	9 008 311 140	1	hexagon head screw ISO 4017 M6x40-8.8-A2C	2		

1 = Packaged quantities 2 = Restricted availability 3 = Parts being phased out 4 = not available individually 5 = see separate list

https://truckmanualshub.com/

https://truckmanualshub.com/

03

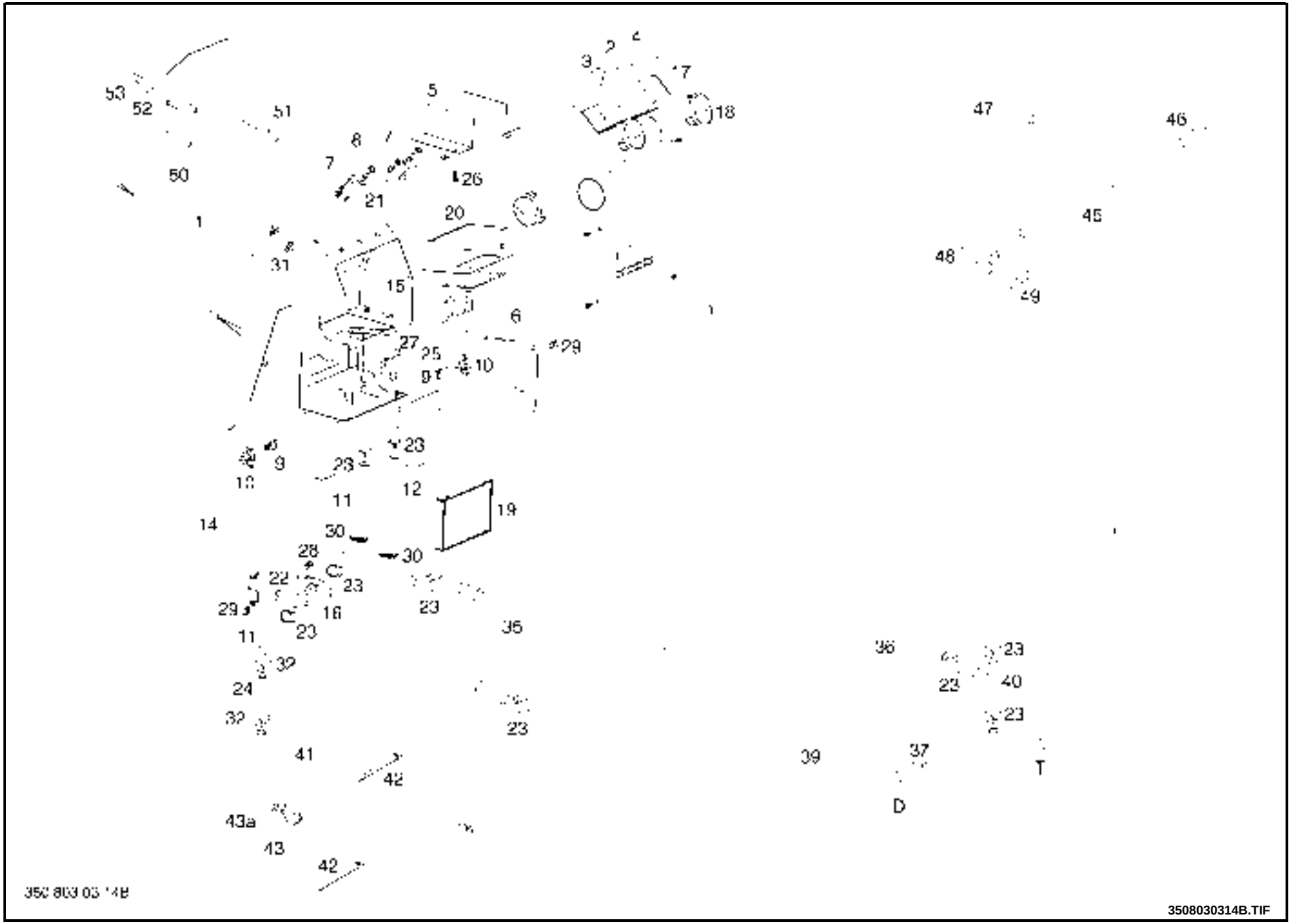

https://truckmanualshub.com/

HEATER 06/2002 I=>

Pos.	Part-No.	I	Designation	Qantity	replaced by	Remarks
	350 584 01 02		heater	1		= pos. 1-32
1	350 381 03 78		harness	1		
2	000 932 15 03		button	1		
3	000 932 15 05		button	1		
4	000 932 15 04		button	1		
5	350 584 03 01		exchanger heat	1		
6	7 9189 11 955		fan	1		
7	351 584 10 08		angle	2		
8	7 9154 95 510		switch	1		
9	351 584 16 16		support	2		
10	000 936 01 65		hinge	2		
11	000 957 53 07		hose	1		
12	000 957 53 08		hose	1		
13	000 957 90 26		hose	1		
14	000 935 03 19		cable pull	1		
15	000 935 03 20		cable pull	1		
16	000 944 40 11		valve	1		
17	000 938 26 01		label	1		
18	352 584 17 00		jet duct nozzle	3		
19	000 983 02 10		filter	1		
20	000 964 19 86		profile rubber	1		
21	000 907 33 22		Clip retaining 4	2		
22	000 931 40 04		clamp	1		
23	000 955 20 14		clip hose DIN 3017 A16-25x25-W2	a.req.		
24	000 951 72 02		section middle	1		
25	000 975 40 00		plate	1		
26	9 113 604 324		sheet metal screw ISO 7049 7981-C4-2x9,5A2C	1		

1 = Packaged quantities 2 = Restricted availability 3 = Parts being phased out 4 = not available individually 5 = see separate list

https://truckmanualshub.com/

Pos.	Part-No.	I	Designation	Qantity	replaced by	Remarks
27	9 041 201 098		socket-head screw ISO 1207 DIN 84-AM5X16-4.8A2C	1		
28	9 087 101 128		screw pan head ISO 7045 M6X16-7985-4.8A2C	2		
29	9 087 216 096		screw pan head ISO 7045 M5X12-7985-5.8A2C	8		
30	000 964 03 40		grommet cable	2		
31	000 964 03 25		grommet cable(collar) 9/11/16	1		
32	000 955 20 36		clip hose DIN 3017 A20-32x13-W2	a.req.		
32	000 955 20 14		clip hose DIN 3017 A16-25x25-W2	2		=>|04/2005
35	350 584 35 04		formed hose	1		
36	350 584 35 06		formed hose	1		
37	000 955 20 31		clip hose DIN 3017 A25-40x13-W2	1		
39	350 108 20 42		hose	1		Diesel version
40	350 584 08 00		t-piece	1		version LPG
41	350 584 35 03		hose formed	1		
42	000 955 20 37		cable tie 9X350 BLACK	3		
43	000 955 30 13		clamp	2		
43a	000 955 30 15		cable clip.	2		
45	351 381 03 67		harness	1		
46	7 9125 11 315		connecting bush DIN 46340	a.req.		
47	7 9125 00 243		cable shoe DIN 46225	a.req.		
48	7 9125 03 848		box 2 way	a.req.		
49	7 9125 03 151		bush	a.req.		
50	350 432 08 04		cover	1		
51	000 955 08 01		clip DIN 3015 12 diam double	2		
52	9 307 003 014		washer DIN 9021 B6,4-ST-A2C	2		
53	9 008 311 140		hexagon head screw ISO 4017 M6x40-8.8-A2C	2		

1 = Packaged quantities 2 = Restricted availability 3 = Parts being phased out 4 = not available individually 5 = see separate list

https://truckmanualshub.com/

Register 04 : STEERING AND WHEELS

04/01	00 - 03	HYDROSTATIC STEERING WITH LINES
04/02	00 - 03	STEERING AXLE
04/03	00 - 02	WHEELS AND TYRES

https://truckmanualshub.com/

HYDROSTATIC STEERING WITH LINES

04

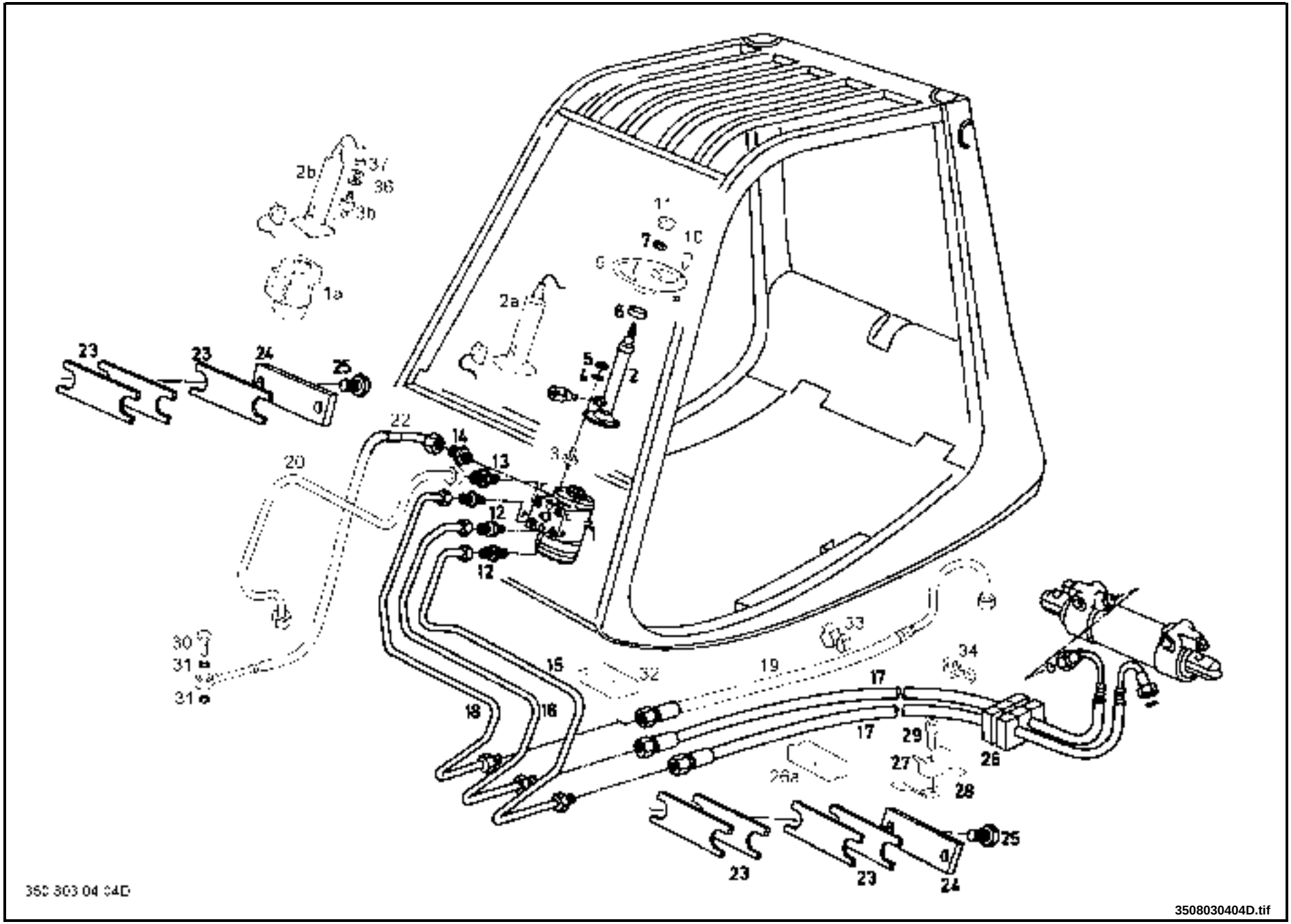

https://truckmanualshub.com/

HYDROSTATIC STEERING WITH LINES

Pos.	Part-No.	I	Designation	Qantity	replaced by	Remarks
1	350 542 12 00		steering control valve	1	350 542 12 03	Bosch including: 1x 351.542.10.04 2x 000.912.34.39 4x 9.308.003.018 2x 9.210.281.110
1	350 542 12 03		steering control valve	1	350 542 12 02	=>|C1X350P00117 (C1X350P00468 - 477)
						with pos. 3,4,5 exchange by set only
1	350 542 12 80	3	valve steering control ex.	1	350 542 12 83	
	350 542 12 83		-sx steering control valve exchange	1		
	000 962 91 38		seal kit	1		for 350.542.12.00
1a	350 542 12 02		steering control valve	1	350 542 12 03	|=>C1X350P00118 (C1X350P00115)
						=>|C1x350R00435 C1x350U00621|=> including: 1x 351.542.10.04 2x 000.912.34.39 4x 9.308.003.018 2x 9.210.281.110
1	350 542 12 03		steering control valve	1		C1x350R00436|=> =>|C1x350U00620
2	350 542 10 00	3	steering column	1	350 542 10 01	=>|C1x350M00042
2a	350 542 10 01		steering column	1		C1x350M00043|=> for pos. 1
						=>|C1X350P00117 (C1X350P00468 - 477)
2	350 542 10 80	3	steering column ex.	1	350 542 10 81	
2a	350 542 10 81		steering column ex.	1		for pos. 1
2b	351 542 10 04		column steering	1	350 542 10 01	C1x350P00118|=> including: C1X350P00115 for pos. 1a
						=>|C1x350R00435 C1x350U00621|=>
2a	350 542 10 01		steering column	1		C1x350R00436|=> =>|C1x350U00620
2b	351 542 10 84		steering column ex.	1		for pos. 1a

1 = Packaged quantities 2 = Restricted availability 3 = Parts being phased out 4 = not available individually 5 = see separate list

https://truckmanualshub.com/

HYDROSTATIC STEERING WITH LINES

04

Pos.	Part-No.	I	Designation	Qantity	replaced by	Remarks
	000 991 01 49		contact	1		for pos. 2
	000 991 04 02		sliding contact	1		for pos.2a , 2b
3	000 902 12 01		stud	2		=>|C1x350P00117
3b	000 912 34 39		bolt	2	000 902 12 01	C1x350P00118|=> including: C1X350P00115
						=>|C1x350R00435 C1x350U00621|=>
3	000 902 12 01		stud	2		C1x350R00436|=> =>|C1x350U00620
4	9 308 003 020	1	washer DIN9021 DIN 9021-B10.5x30x2.5	2		=>|C1X350P00117
4	9 308 003 018	1	washer ISO 7093-1 8-200HV-A2C	2		C1x350U00621|=>
5	9 210 281 130	1	nut hexagon ISO 4032 DIN 934-M10-8A2C	2		=>|C1X350P00117
5	9 210 281 110	1	nut ISO 4032 934-M8-8A2C	2		C1x350U00621|=>
6	000 962 50 29		cap	1		
7	9 211 281 176	1	nut hexagon DIN 936 M18x1,5-17H-A2C	1		
9	000 991 02 05	3	steering wheel	1	000 991 02 06	
9	000 991 02 06		steering wheel	1		
10	000 991 03 06		handle	1		
11	000 991 01 02		signal button	1		
12	9 721 002 062		pipe union ISO 8434-1 SDS-S12xM18x1,5-type E-A3C-V	3		
13	9 721 002 015		pipe union ISO 8434-1 SDS-L15xM18x1,5-type E-CFS-V	1		
14	9 721 002 001		adaptor DIN 3901	1		
15	350 440 14 15		pipe assy.	1		
16	350 440 14 18		pipe assy.	1		
17	000 957 30 74		hose line	2		
18	350 440 14 09		pipe assy.	1		
19	350 448 35 29		hoseline	1		
	000 963 20 20		o-ring 9x1,5-V80	1		for pos. 19
	000 963 21 28		o ring 316 truck	1		for pos. 19

1 = Packaged quantities 2 = Restricted availability 3 = Parts being phased out 4 = not available individually 5 = see separate list

https://truckmanualshub.com/

HYDROSTATIC STEERING WITH LINES

Pos.	Part-No.	I	Designation	Qantity	replaced by	Remarks
	000 955 08 18		clamp hose	1	000 955 08 15	for pos. 19
	000 955 08 15		clamp hose	1		for pos. 19
20	350 440 14 10		pipe line assy. 15x2-N/D	1		
	000 950 22 72		clip fastening assy. A3+A4/11-16	1		
22	000 957 17 44		hose-low pressure	1		
23	000 964 08 46		rubber plate	7		
24	000 918 56 06		shackle assy	2		
25	9 008 311 177	1	hexagon head screw ISO 4017 M8x16-8.8-A2C	4		
26	000 955 08 15		clamp hose	2	000 955 08 68	
26a	000 955 08 68		clamp hose	1		
27	000 964 45 14		clamping piece	2		
28	000 931 49 08		clip spring	2		
29	9 045 311 180	1	socket-head screw ISO 4762 M8x20-8.8-A2C	2		
30	9 170 281 023	1	hollow screw DIN 7643	1		
31	9 636 801 063		seal ring DIN 7603 A8X11,5-Cu	2		
32	000 955 08 67		clamp hose	1		=>| 03/2008
33	000 950 22 72		clip fastening assy. A3+A4/11-16	1		
34	000 955 30 42		clip cable double /13-14	1		01/2004 |=>
35	352 432 05 46		insulating mat	1		
36	9 308 003 018		washer ISO 7093-1 8-200HV-A2C	4		C1x350P00118|=> including: C1X350P00115 =>|C1x350R00435 C1x350U00621|=>
36	9 308 003 020		washer DIN9021 DIN 9021-B10.5x30x2.5	2		C1x350R00436|=> =>|C1x350U00620
37	9 210 281 110		nut ISO 4032 934-M8-8A2C			C1x350P00118|=> including: C1X350P00115 =>|C1x350R00435 C1x350U00621|=>
37	9 210 281 130		nut hexagon ISO 4032 DIN 934-M10-8A2C	2		C1x350R00436|=> =>|C1x350U00620

1 = Packaged quantities 2 = Restricted availability 3 = Parts being phased out 4 = not available individually 5 = see separate list

https://truckmanualshub.com/

STEERING AXLE

04

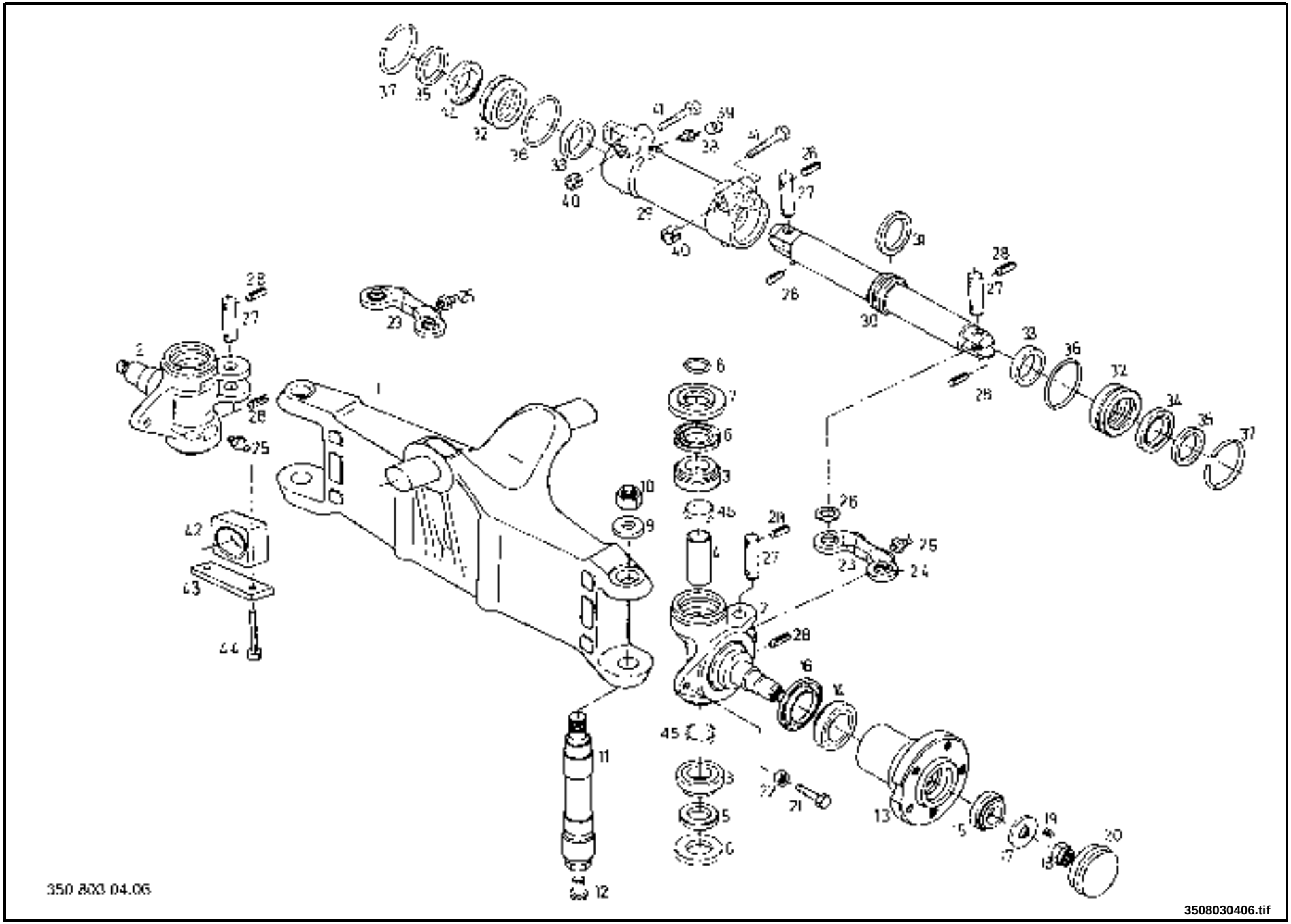

https://truckmanualshub.com/

STEERING AXLE

Pos.	Part-No.	I	Designation	Qantity	replaced by	Remarks
	301 000 25 00		steering axle AL16-01	1		= pos. 1-43
1	301 451 04 01		central axle	1		
2	301 453 03 05		stub axle	2		
	302 450 90 00		repair kit	4		= pos.3+6+45
	000 938 21 89		data plate	1		04/2007|=> for 3010002500
3	----------	4	tapered roller bear. 33,338x68,262	4		
4	000 917 40 19		pipe	2		
5	000 914 33 09		washer	2		
6	000 962 26 28		wiper ring A54X73X6P	4		
7	000 910 05 05		spacer ring assy.	2		= pos. 7+8
8	000 963 23 19		o-ring 33,3x2,4-P70	2		
9	000 914 19 04		washer 19x42x8	2		
10	9 214 342 176	3	hexagon nut ISO 10513 M18x1,5-10-A2C	2	9 212 341 176	
10	9 212 341 176	1	nut hexagon DIN 985 NM18x1,5-10-A2C	2		
11	301 453 02 10		steering pivot pin	2		
12	000 962 01 01	1	pipe plug WN 17253 WN 17253-14,9X9,5	2		
13	301 454 02 15		wheel hub	2		
14	000 924 73 15		bearing taper rolling	2		
15	000 924 73 18		bearing	2		
16	000 928 03 26		shaft seal ring AS50x72x12P72	2		
17	000 914 14 39	3	washer	2	000 914 14 13	
17	000 914 14 13		washer	2		
18	9 214 317 156	1	hexagon nut ISO 10513 M14x1,5-8-A2C	2		
19	9 380 620 257	1	spring dowel sleeve ISO 8752 5x12-ST	2		
20	342 454 03 00		wheel cap	2		
21	9 008 311 302	1	hexagon head screw ISO 4017 M12x40-8.8-A2C	2		

1 = Packaged quantities 2 = Restricted availability 3 = Parts being phased out 4 = not available individually 5 = see separate list

https://truckmanualshub.com/

Pos.	Part-No.	I	Designation	Qantity	replaced by	Remarks
22	9 210 281 140	1	hexagon nut ISO 4032 DIN 934-M12-8A2C	2		
23	301 450 13 02		rod tie assy.	2		= pos. 23-26
24	9 512 000 175		spherical bearing	4		
25	9 607 021 060	1	lubrication nipple DIN 71412 71412-AM6	8		
26	000 961 04 32	1	seal ring	8		
27	000 912 20 04		bolt	4		
28	9 384 620 317	1	spring cotter DIN 7346 DIN 7346-6x28	8		
	301 540 42 15	3	cylinder steering assy.	1	301 540 42 04	= pos. 29-39
	301 540 42 04		cylinder assy.	1		= pos. 29-32a, 34-39
29	301 491 01 02		cylinder pipe	1		
30	301 490 20 05		rod piston assy.	1		
31	000 962 36 24	3	seal ring	1	301 450 90 01	
32	301 452 08 05	3	guide bush	2	301 450 90 01	
32	----------	4	guide bush	2		
32a	----------	4	guide bush assy.	2		= pos. 32,34 - 36
D	000 960 80 30	3	set of seal assy.	1	301 450 90 01	= pos. 31,33 - 36a
R2	301 450 90 01		repair kit assy. steering cylinder	1		= 2 X pos. 32a 1 X pos. 31 1 X pos. 36a
33	----------	4	band rotating driving 50x55x9,5	2		for 0009608030
34	----------	4	grooved ring 50x58x8	2		
35	----------	4	wiper ring 50x60x5/7	2		
36	----------	4	o-ring DIN 3771 63x3,55-P90	2		
36a	000 941 97 72		sleeve	1		only for assembly
37	000 907 11 27		snap ring	2		
38	9 721 002 010	1	pipe union ISO 8434-1 SDS-L10xM14x1,5-type E-A3C-V	2		
39	000 962 01 99	1	pipe plug WN 17253 WN 17253-C16,3X13	2		
40	9 384 621 744	1	spring cotter DIN 7346 DIN 7346-21X30	2		

1 = Packaged quantities 2 = Restricted availability 3 = Parts being phased out 4 = not available individually 5 = see separate list

https://truckmanualshub.com/

STEERING AXLE

Pos.	Part-No.	I	Designation	Qantity	replaced by	Remarks
41	9 010 312 305	1	hexagon head bolt ISO 8765 M16x1,5x100-8.8	4		
42	000 964 01 29		buffer	2		
43	000 918 58 03		bracket	2		
44	9 045 311 416	1	socket-head screw ISO 4762 M16x70-8.8-A2C	4		Loctite nr. 270
45	000 961 03 14		seal ring	4		

1 = Packaged quantities 2 = Restricted availability 3 = Parts being phased out 4 = not available individually 5 = see separate list

https://truckmanualshub.com/

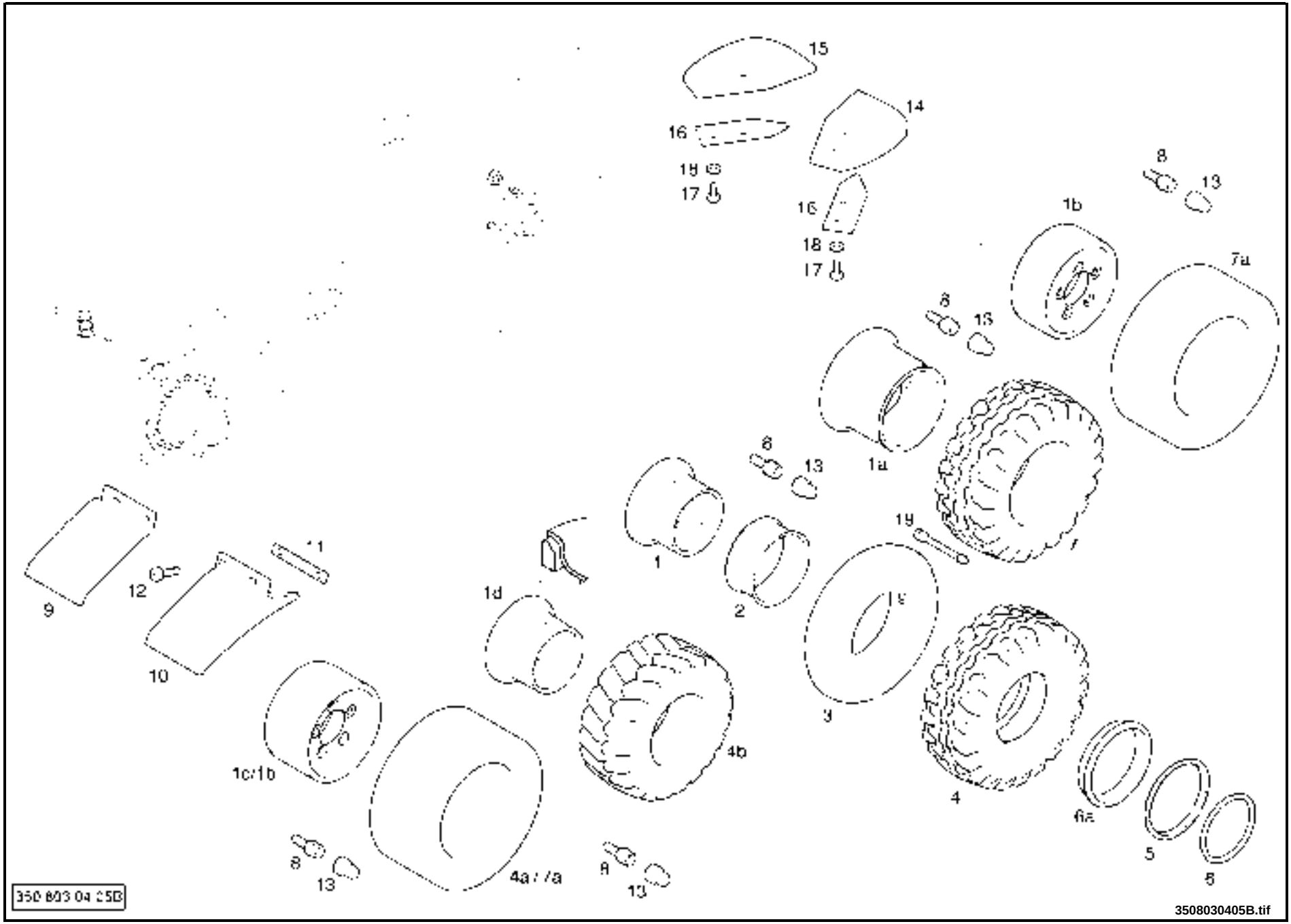

https://truckmanualshub.com/

WHEELS AND TYRES

Pos.	Part-No.	I	Designation	Qantity	replaced by	Remarks
	000 990 20 44		air wheel assy. 18x7-8/16PR	4		= Pos. 1,2-4,5,6
	000 990 20 18		air wheel assy. 18x7 R8/16PR-XZM	4		= Pos. 1,2-4,5,6 , 19 Michelin
	000 990 20 82		air wheel assy. 18x7 R8-XZR	4		= Pos. 1,2-4,5,6 Michelin
	000 990 18 42		air wheel assy. 21x8-9/16PR	2		= Pos. 1,2-4,5,6,6a
1	000 993 20 94		wheel disc 4.33R-8	4		
1	000 993 20 03		wheel-disc 6.00E-9	2		drive axle
	000 990 05 28		tyre assy. DIN 7811 18x7-8/16PR	4		= pos. 2-4
	000 990 05 40		tyre assy. 18x7 R8-XZM	4		= pos. 2-4
	000 990 05 47		tyre assy. 18x7 R8-XZR	4		= pos. 2-4 Michelin
	000 990 05 84		tyre assy. 21x8-9/16PR	2		= pos. 2-4
	000 990 24 98		wheel solid assy.	2		= pos. 1c+4a
	000 990 21 40		wheel solid assy. 200/50-10 bright	2		= pos. 1a+4b annex used only with strap earth
	000 990 23 24		wheel solid assy. 200/50-10	2		= pos. 1a+4b
1a	000 993 21 26		wheel-disc 6,50F-10	2		
1b	000 993 20 87		wheel rim	2		
1c	000 993 22 13		wheel disc	2		
1d	000 990 15 00		disc wheel assy. 4,33R-8	2		
2	9 815 000 087		flap 115-8	4		
3	9 815 000 086		tube inner(pneu.tyre) 18X7-8	4		
4	9 815 000 088		tyre pneum DIN 7811 18X7-8/16PR	4		
4	9 815 010 085		tyre DIN 7811 18x7 R8-XZM	4		Michelin
4	9 815 011 085		tyre DIN 7811 18x7-8/16PR-XZR	4		Michelin
4a	000 993 70 94		tyre solid 18x7x12 1/8	2		Michelin
4b	9 815 005 948		tyre solid DIN 7845 200/50-10-BRIGHT	2		
4b	000 993 70 32		tyre solid 200/50-10 SIT	2		
5	000 993 83 21		ring side (nd)	4		

1 = Packaged quantities 2 = Restricted availability 3 = Parts being phased out 4 = not available individually 5 = see separate list

https://truckmanualshub.com/

Pos.	Part-No.	I	Designation	Qantity	replaced by	Remarks
5	000 993 83 02		ring side	2		
6	000 993 82 21		ring lock (nd)	4		
6	000 993 82 01		ring lock	2		
6a	000 993 84 01		ring bevel shoulder	2		
	000 990 23 19		wheel solid assy. 18x6x12 1/8 profillos	4		= pos. 1b+7a
	000 990 21 62		wheel solid assy. 18x7-8	4		= pos. 1+7
	000 990 23 05		wheel solid assy. 18x7-8 bright	4		= pos. 1+7 annex used only with strap earthin
	000 990 23 24		wheel solid assy. 200/50-10	2		= pos. 1a+7
7	9 815 002 945		tyre solid DIN 7852	2		
7	9 815 005 945		tyre solid cont. DIN 7852 18X7-8	4		
7	000 993 70 32		tyre solid 200/50-10 SIT	2		
7a	000 993 70 31		tyre solid	4		
8	9 177 342 249	1	head bolt DIN 74361 G14x24-10.9-DAC	20		
9	350 602 05 06	3	mudguard right	1	350 602 05 03	
9	350 602 05 03		mudguard	1		
10	350 602 05 01	3	mudguard left	1	350 602 05 04	
10	350 602 05 04		mudguard	1		
11	000 910 10 15		shackle assy.	2		
12	9 087 128 244	1	screw ISO 7045 M10x40-4.8 DELTASEAL, DIN 7985	4		
13	000 964 37 25		protective cap	20		=>| 08/2001
14	350 602 05 17		mudguard left	1		
15	350 602 05 18		mudguard right	1		
16	350 602 07 00		plate	2		
17	9 008 311 239	1	hexagon head screw ISO 4017 M10x25-8.8-A2C	4		
18	9 309 412 020	1	washer DIN 7349 DIN 7349-10,5x25x4	20		

1 = Packaged quantities 2 = Restricted availability 3 = Parts being phased out 4 = not available individually 5 = see separate list

Register 05 : CONTROLS

05/01	00 - 02	SPEED CONTROL DIESEL ENGINE
05/02	00 - 01	SPEED CONTROL LP GAS VERSION
05/03	00 - 06	TRAVEL AND BRAKE OPERATION
05/04	00 - 03	ACTUATOR OF PILOT VALVE

https://truckmanualshub.com/

SPEED CONTROL DIESEL ENGINE

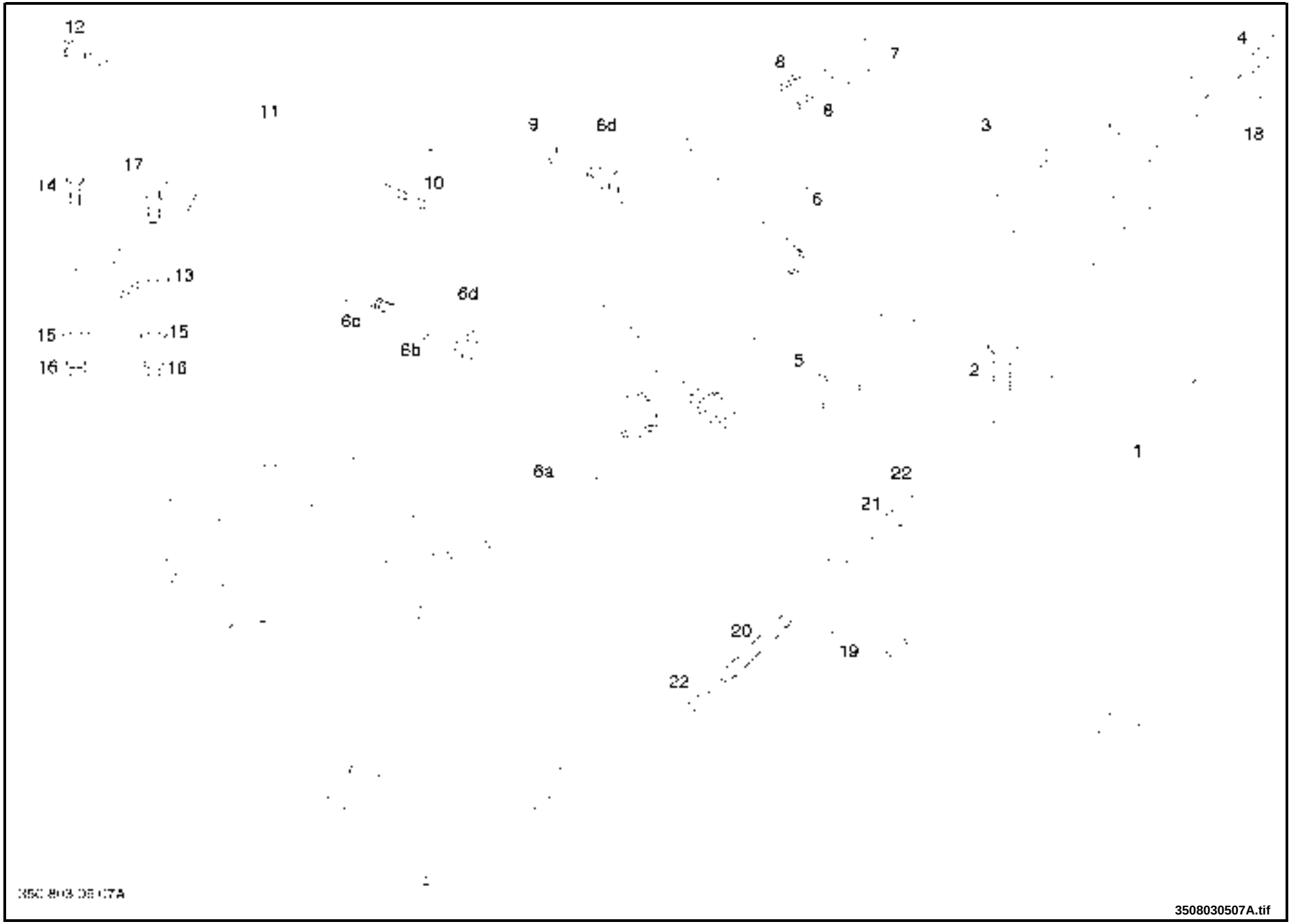

05

https://truckmanualshub.com/

SPEED CONTROL DIESEL ENGINE

Pos.	Part-No.	I	Designation	Qantity	replaced by	Remarks
1	350 520 71 06		angle assy.	1		
2	9 008 311 241	1	hexagon head screw ISO 4017 M10x30-8.8-A2C	3		
3	350 527 02 07		angle	1		
4	9 008 311 183	1	hexagon head screw ISO 4017 M8x25-8.8-A2C	4		
5	000 955 50 05		clip	1		
6	000 973 60 04		solenoid	1		=>| C1X350M00009
6a	000 973 60 99		magnet	1		C1X350M00010 |=> = Pos. 6a,6b,6c,6d
	7 9125 03 817		housing tab 2 pin	1		to pos. 6a
	7 9125 03 753		tab 0,5-1,0	a.req.		to pos. 6a
	7 9149 99 019		seal 0,35-1	a.req.		to pos. 6a
6b	000 916 05 05		bush	1		
6c	000 934 19 02		ball joint 8	1		
6d	000 962 55 75		bellows	1		
7	000 975 17 05		socket housing 2-P	1		
8	7 9125 11 315		connecting bush DIN 46340	2		
9	000 934 15 03		ball cup	1		
10	9 210 281 070	1	hexagon nut ISO 4032 M5-8-A2C	4		
11	000 902 52 17		rod threaded	1		
12	9 210 281 071	1	hexagon nut ISO 4032 DIN 934-M5L-8A2C	1		
13	350 202 05 01		lever	1		
14	9 008 311 098	1	hexagon head screw ISO 4017 M5x16-8.8-A2C	2		
15	9 292 003 012	1	washer ISO 7089 A5,3-ST-A2C	3		
16	9 210 281 070	1	hexagon nut ISO 4032 M5-8-A2C	3		
17	9 798 311 011		ball joint DIN 71802 AS8L-Y71802-A2C	1		
	9 803 311 084		ball-ended spindle DIN 71803 C8-71823-A2C	1		to pos.17
	9 803 050 083		safety-stirrup DIN 71805 71805-S8-A2C	1		to pos.17

1 = Packaged quantities 2 = Restricted availability 3 = Parts being phased out 4 = not available individually 5 = see separate list

https://truckmanualshub.com/

SPEED CONTROL DIESEL ENGINE

05

Pos.	Part-No.	I	Designation	Qantity	replaced by	Remarks
18	350 363 14 29		support	1		01/2001 |=>
19	000 978 50 00		sensor	1		
20	000 902 50 65		rod	1		Loctite nr. 270
21	000 916 06 09		bush	1		
22	9 210 281 090	1	hexagon nut ISO 4032 DIN 934-M6-8A2C	2		

1 = Packaged quantities 2 = Restricted availability 3 = Parts being phased out 4 = not available individually 5 = see separate list

https://truckmanualshub.com/

https://truckmanualshub.com/

SPEED CONTROL LP GAS VERSION

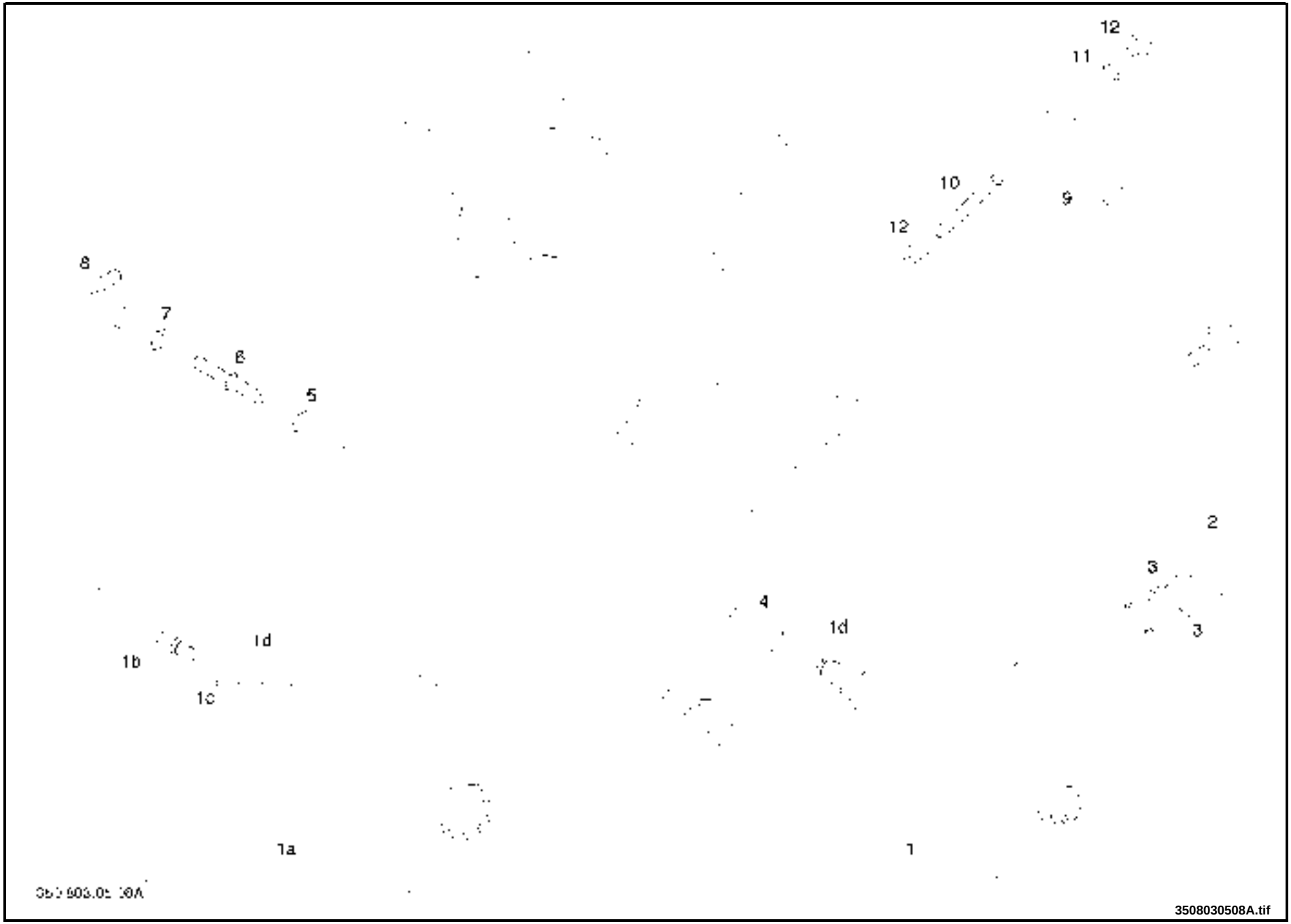

https://truckmanualshub.com/

SPEED CONTROL LP GAS VERSION

Pos.	Part-No.	I	Designation	Qantity	replaced by	Remarks
1	000 973 60 04		solenoid	1		=>| H2X350L02565
1a	000 973 60 99		magnet	1		H2X350L02566 |=> = Pos. 1a,1b,1c,1d
	7 9125 03 817		housing tab 2 pin	1		for pos. 1a
	7 9125 03 753		tab 0,5-1,0	a.req.		for pos. 1a
	7 9149 99 019		seal 0,35-1	a.req.		for pos. 1a
1b	000 934 19 02		ball joint 8	1		
1c	000 916 05 05		bush	1		
1d	000 962 55 75		bellows	1		
2	000 975 17 05		socket housing 2-P	2		
3	7 9125 11 315		connecting bush DIN 46340	2		
4	000 934 15 03		ball cup	1		
5	9 210 281 070		hexagon nut ISO 4032 M5-8-A2C	1		
6	000 902 01 80		stud M5R/M5Lx37	1		
7	9 210 281 071	1	hexagon nut ISO 4032 DIN 934-M5L-8A2C	1		
8	9 798 311 011		ball joint DIN 71802 AS8L-Y71802-A2C	1		
	9 803 311 084		ball-ended spindle DIN 71803 C8-71823-A2C	1		to pos. 8
	9 803 050 083	1	safety-stirrup DIN 71805 71805-S8-A2C	1		to pos. 8
9	000 978 50 00		sensor	1		
10	000 902 50 65		rod	1		Loctite nr. 270
11	000 916 06 09		bush	1		
12	9 210 281 090	1	hexagon nut ISO 4032 DIN 934-M6-8A2C	2		

1 = Packaged quantities 2 = Restricted availability 3 = Parts being phased out 4 = not available individually 5 = see separate list

https://truckmanualshub.com/

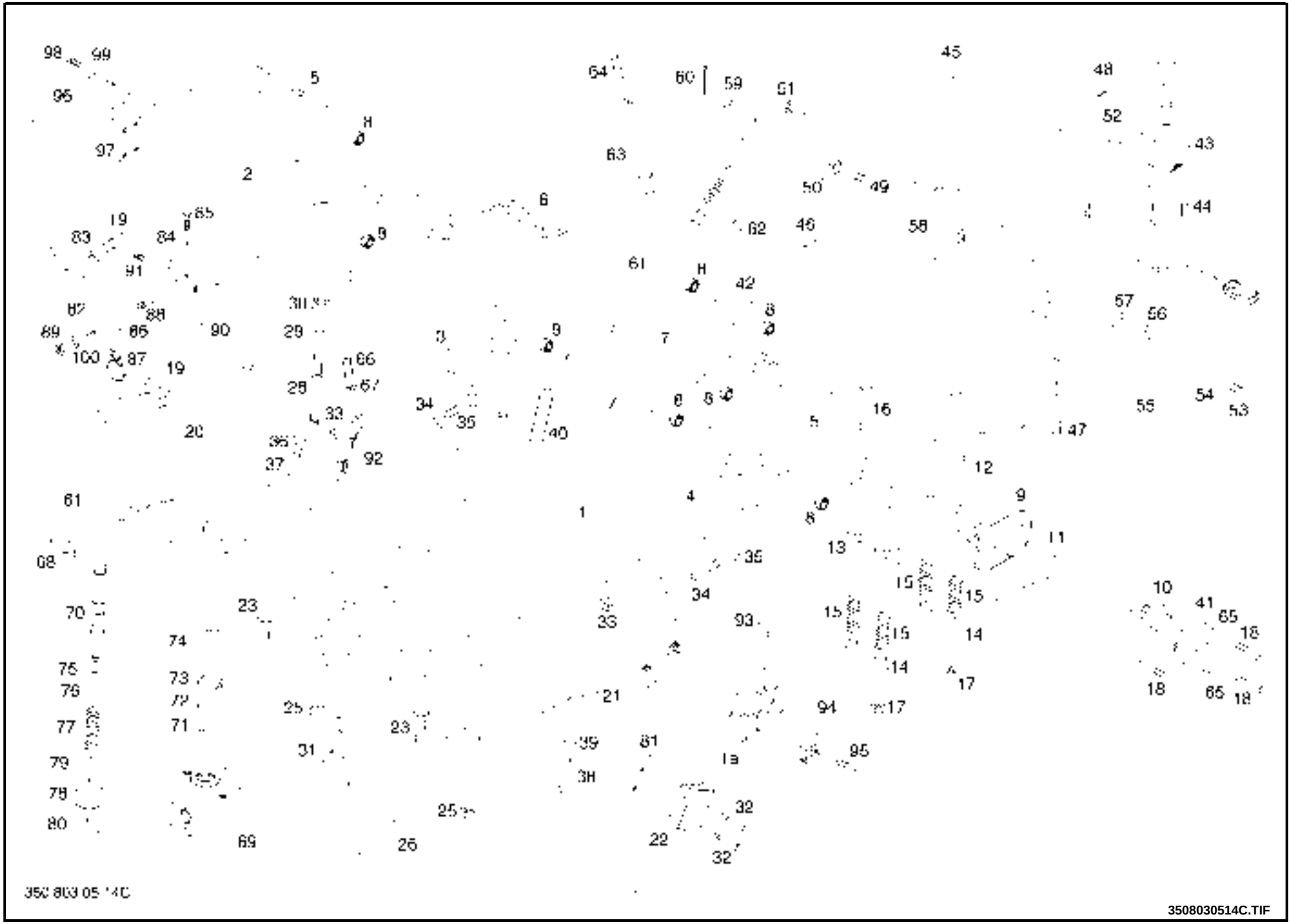

https://truckmanualshub.com/

TRAVEL AND BRAKE OPERATION

Pos.	Part-No.	I	Designation	Qantity	replaced by	Remarks
1	350 520 63 00	3	plate assy.	1	350 520 63 02	including: 1x 392.527.36.06 4x 9.062.316.180 1x 350.363.14.41 2x 9.045.311.065
1	350 520 63 02		plate assy.	1		
1a	392 527 36 08		bearing block	1		
2	350 520 56 05		accelerator pedal assy.	1	350 520 56 08	=>|C1X350S00349
2	350 520 56 08		accelerator pedal assy.	1		C1X350S00350|=>
3	350 520 26 01		brake pedal assy.	1		
4	350 520 56 06		accelerator pedal assy.	1		
5	000 964 45 87		pedal direction covering	2		
6	000 964 45 91		pedal stop covering	1		
7	000 913 12 04		rod pedal pivot	2		
8	000 924 80 41		needle bearing 12x18x14RS	6		
9	000 964 37 38		protective cap	1		
10	000 964 46 37	3	pinion gear	1	350 527 47 00	
10	350 527 47 00		pinion gear sensor	1		
11	000 964 46 38	3	gear	1	350 527 46 00	
11	350 527 46 00	3	gear	1	350 527 46 01	
11	350 527 46 01		gear sensor	1		
12	335 527 30 06		bracket	1		
13	335 527 30 07		bracket	1		
14	000 964 46 39		guide spring	2		
15	000 921 20 27		spring 2X15.5X29.22	4		
16	9 027 068 142	1	screw truss head DIN 603 din 603 M6x45-4.6-A2C	4		
17	9 210 281 090	1	hexagon nut ISO 4032 DIN 934-M6-8A2C	4	9 214 317 090	Loctite nr. 270
17	9 214 317 090	1	nut hexagon ISO 7042 M6-8-A2C	4		
18	9 045 316 074	1	socket head screw ISO 4762 M4x25-8.8-A2C	4		

1 = Packaged quantities 2 = Restricted availability 3 = Parts being phased out 4 = not available individually 5 = see separate list

https://truckmanualshub.com/

Pos.	Part-No.	I	Designation	Qantity	replaced by	Remarks
19	9 008 311 236	1	hexagon head screw ISO 4017 M10x20-8.8-A2C	2		
20	000 922 51 48		leaf spring	1		
21	335 431 19 03	3	block bearing	1	392 431 19 00	
21	392 431 19 00		bearing block pedal assy	1		
22	000 973 30 23	3	limit switch	2	000 973 30 33	=>|C1x350U00117
22	000 973 30 33		microswitch	2		C1x350U00118|=>
23	9 008 311 244	1	hexagon head screw ISO 4017 M10x40-8.8-A2C	1/2		single pedal 1 double pedal 2
25	9 210 281 130	1	nut hexagon ISO 4032 DIN 934-M10-8A2C	1/2		
26	350 522 06 00		bracket	1		
28	9 124 311 252	1	stud threaded DIN 939 M10X80-8.8A2C	2		
29	9 309 412 020	1	washer DIN 7349 DIN 7349-10,5x25x4	2		
30	9 210 281 130	1	nut hexagon ISO 4032 DIN 934-M10-8A2C	2		
31	000 918 63 13		plate joining	1		
32	9 008 311 045	1	hexagon head screw ISO 4017 M3x35-8.8-A2C	2		
33	9 210 281 110	1	nut ISO 4032 934-M8-8A2C	2		
34	9 309 412 018	1	washer DIN 7349 DIN 7349-8.4x21x4,8A2C	2		
35	9 007 311 197	1	hexagon head bolt ISO 4014 M8x60-8.8-A2C	2		
36	9 008 311 183	1	hexagon head screw ISO 4017 M8x25-8.8-A2C	2		
37	9 309 412 018	1	washer DIN 7349 DIN 7349-8.4x21x4,8A2C	2		
38	9 008 311 138	1	hexagon head screw ISO 4017 M6x35-8.8-A2C	1		Loctite nr. 270
39	9 292 003 014	1	washer ISO 7089 A6,4-ST50-A2C	1		
40	000 922 17 02		spring 2,5x19,5x85,75	1		
41	7 9164 00 159		potentiometer	1		
42	350 527 13 03		spacer for single pedal	1		single pedal
43	000 973 29 35	3	switch	1	000 973 29 51	single pedal
43	000 973 29 51		switch	1		single pedal

1 = Packaged quantities 2 = Restricted availability 3 = Parts being phased out 4 = not available individually 5 = see separate list

https://truckmanualshub.com/

Pos.	Part-No.	I	Designation	Qantity	replaced by	Remarks
	7 9125 03 149		housing 6P	1		to pos.43
	7 9125 03 753		tab 0,5-1,0	a.req.		to pos.43
	7 9149 99 019		seal 0,35-1	a.req.		to pos.43
	7 9149 99 025		stopper	a.req.		to pos.43
	7 9149 99 023		seal 6P	a.req.		to pos.43
44	9 060 145 066	1	screw csk hd DIN 965 M4X12-965-4.8A2R	4		
45	351 438 02 01	3	control console top	1	352 438 02 01	=>|01/2002 07/2005|=>
						=>|09/2007
45	352 438 02 01		dashboard	1		02/2002|=> =>|06/2005
						C1X350T00358|=> =>|C1X350T00373
						10/2007|=> =>|01/2008
45	351 438 02 21		*****	1		02/2008|=>
45	351 438 02 02		dashboard	1		version ultra sound sensor
45	350 438 02 00		dashboard	1		version ultra sound sensor and LFM
46	351 438 02 10	3	control console bottom part	1	352 438 02 00	=>|01/2002 07/2005|=>
						=>|09/2007
46	352 438 02 00		dashboard	1		02/2002|=> =>|06/2005
						C1X350T00358|=> =>|C1X350T00373
						10/2007|=> =>|01/2008
46	351 438 02 26		*****	1		02/2008|=>
47	9 087 144 132	1	screw pan head ISO 7045 M6X20-7985-4.8A2C	4		
48	9 087 144 125	1	screw pan head ISO 7045 M6X10-7985-4.8A2C	1		
49	9 087 101 128	1	screw pan head ISO 7045 M6X16-7985-4.8A2C	2		=>| 01/2002 07/2005|=>
						=>|09/2007
49	9 087 101 128	1	screw pan head ISO 7045 M6X16-7985-4.8A2C	3		02/2002|=> =>|06/2005
						C1X350T00358|=> =>|C1X350T00373
						10/2007|=>

1 = Packaged quantities 2 = Restricted availability 3 = Parts being phased out 4 = not available individually 5 = see separate list

https://truckmanualshub.com/

Pos.	Part-No.	I	Designation	Qantity	replaced by	Remarks
49	9 062 311 129		countersunk screw ISO 10642 M6x16-8.8-A2C	1		for 3514380201
50	9 309 412 014	1	washer DIN 7349 DIN 7349-6,4x17x3A2C	2		=>| 01/2002 07/2005|=>
						=>|09/2007
50	9 292 003 014	1	washer ISO 7089 A6,4-ST50-A2C	3		02/2002|=> =>|06/2005
						C1X350T00358|=> =>|C1X350T00373
						10/2007|=>
51	9 210 281 090	1	hexagon nut ISO 4032 DIN 934-M6-8A2C	2		=>| 01/2002 07/2005|=>
						=>|09/2007
51	9 210 281 090	1	hexagon nut ISO 4032 DIN 934-M6-8A2C	3		02/2002|=> =>|06/2005
						C1X350T00358|=> =>|C1X350T00373
						10/2007|=>
52	000 962 01 25		pipe plug 25	1		
53	9 045 316 096	1	socket-head screw ISO 4762 M5x12-8.8-A2C	1		
54	9 323 620 012	1	washer wave DIN 137 DIN 137-B5-A2C	1		
55	351 528 10 00		lever	1		
56	9 291 003 020	1	washer DIN 125 B10,5x20x2-HV200-A2C	1		
57	9 294 003 020	1	washer DIN 433 DIN 433-10,5-ST50-A2C	1		for 3514380201
58	351 510 07 00		lever assy.	1		
59	9 289 003 029	1	washer/shim/disc DIN 988	1		
60	9 395 003 081	1	cotter pin ISO 1234 DIN 94-6X16-ST-A2C	1		
61	000 935 06 40		cable brake assy	1		
62	000 907 33 17	1	locking disc A10x0,6	1		
63	000 912 85 13		spacer bolt	1		heating
64	9 124 311 131	1	screw threaded DIN 939 M6X18-939-8.8A2C	1		heating
65	9 292 003 010	1	washer DIN 125 A4.3x9x0.8-125-A2C	2		
66	9 133 339 137	1	threaded pin DIN 913 M6x30-8.8-A2C	1		
67	9 210 281 090	1	hexagon nut ISO 4032 DIN 934-M6-8A2C	1		

1 = Packaged quantities 2 = Restricted availability 3 = Parts being phased out 4 = not available individually 5 = see separate list

https://truckmanualshub.com/

Pos.	Part-No.	I	Designation	Qantity	replaced by	Remarks
68	000 955 05 06		clip	1		
	674 340 61 00		brake valve assy.	1	674 340 61 02	= pos. 69-81,28 including: 1x 000.961.22.06 1x 000.963.21.24
	674 340 61 02		brake valve assy.	1	674 340 61 10	= pos. 69-81,28
	674 340 61 10		brake valve assy.	1		= pos. 69-81,28
69	674 341 01 02	3	housing	1	674 341 01 03	including: 1x 000.961.22.06 1x 000.963.21.24
69	----------	4	housing	1		
70	674 345 04 04		piston	1		
71	000 962 19 48		shaft seal	1	000 928 18 03	=>|C1X350S00349
71	000 928 18 03		seal ring shaft 10x16x4-P70	1		C1x350S00350|=>
72	000 914 10 44		spacer	1		=>|C1x350R00414
72	-		washer	1		C1x350R00415|=>
73	9 456 622 214	1	circlip DIN 472	1		
74	000 962 55 23		boot	1		
75	674 343 38 04		spring plate	1		
76	9 464 620 060	1	snap ring DIN 7993	1		
77	000 921 12 35		compression spring 1,2x12,9x38x6,4	1		
78	674 343 38 03		spring plate	1		
79	000 963 02 65		o ring 24x3-V80	1		
80	9 464 621 240	1	circlip DIN 7993	1		
81	000 918 50 08		plate joining	1		
82	350 363 14 43	3	support	1	350 363 14 59	LFM including: 1x 350.527.02.11 1x 350.527.29.01 4x 9.045.316.102 4x 9.292.003.012

1 = Packaged quantities 2 = Restricted availability 3 = Parts being phased out 4 = not available individually 5 = see separate list

https://truckmanualshub.com/

Pos.	Part-No.	I	Designation	Qantity	replaced by	Remarks
82	350 363 14 59		support	1		
83	9 294 003 020	1	washer DIN 433 DIN 433-10,5-ST50-A2C	2		=>| 05/2005
84	350 527 02 09	3	angle	1	350 527 02 11	LFM including: 1x 350.363.14.59 1x 350.527.29.01 4x 9.045.316.102 4x 9.292.003.012
84	350 527 02 11		angle	1		
85	9 087 101 061	1	button head screw ISO 7045 M4x6-4.8-H-A2C	1		=>| 05/2005
86	7 9174 15 563		sensor	1		LFM
87	000 950 22 63		clip fastening assy.	1		
88	9 051 216 039	1	countersunk screw DIN 963 M3x18-5.8	1		
89	9 210 281 040	1	hexagon nut ISO 4032 M3-934-8A2C	1		Loctite nr. 243
90	350 522 14 01		clamping piece	1		=>| 05/2005 LFM
91	9 008 311 128	1	hexagon head screw ISO 4017 M6x16-8.8-A2C	1		=>| 05/2005
92	350 363 14 42		support 2xjm4	1		LFM
93	9 062 316 180		countersunk screw ISO 10642 M8x20-8.8-A2C	4		
94	350 363 14 41		support	1		
95	9 045 311 065	1	screw skt hd ISO 4762 M4x10-8.8-A2R	2		
96	350 527 02 11		angle	1		
97	350 527 29 01		plate	1		
98	9 045 316 102	1	screw ISO 4762 M5x20-8.8-A2C	4		
99	9 292 003 012	1	washer ISO 7089 A5,3-ST-A2C	4		
100	9 292 003 008	1	washer DIN 125 A3,2-ST50-A2C	1		
	000 962 01 25		pipe plug 25	1		

1 = Packaged quantities 2 = Restricted availability 3 = Parts being phased out 4 = not available individually 5 = see separate list

https://truckmanualshub.com/

https://truckmanualshub.com/

ACTUATOR OF PILOT VALVE

05

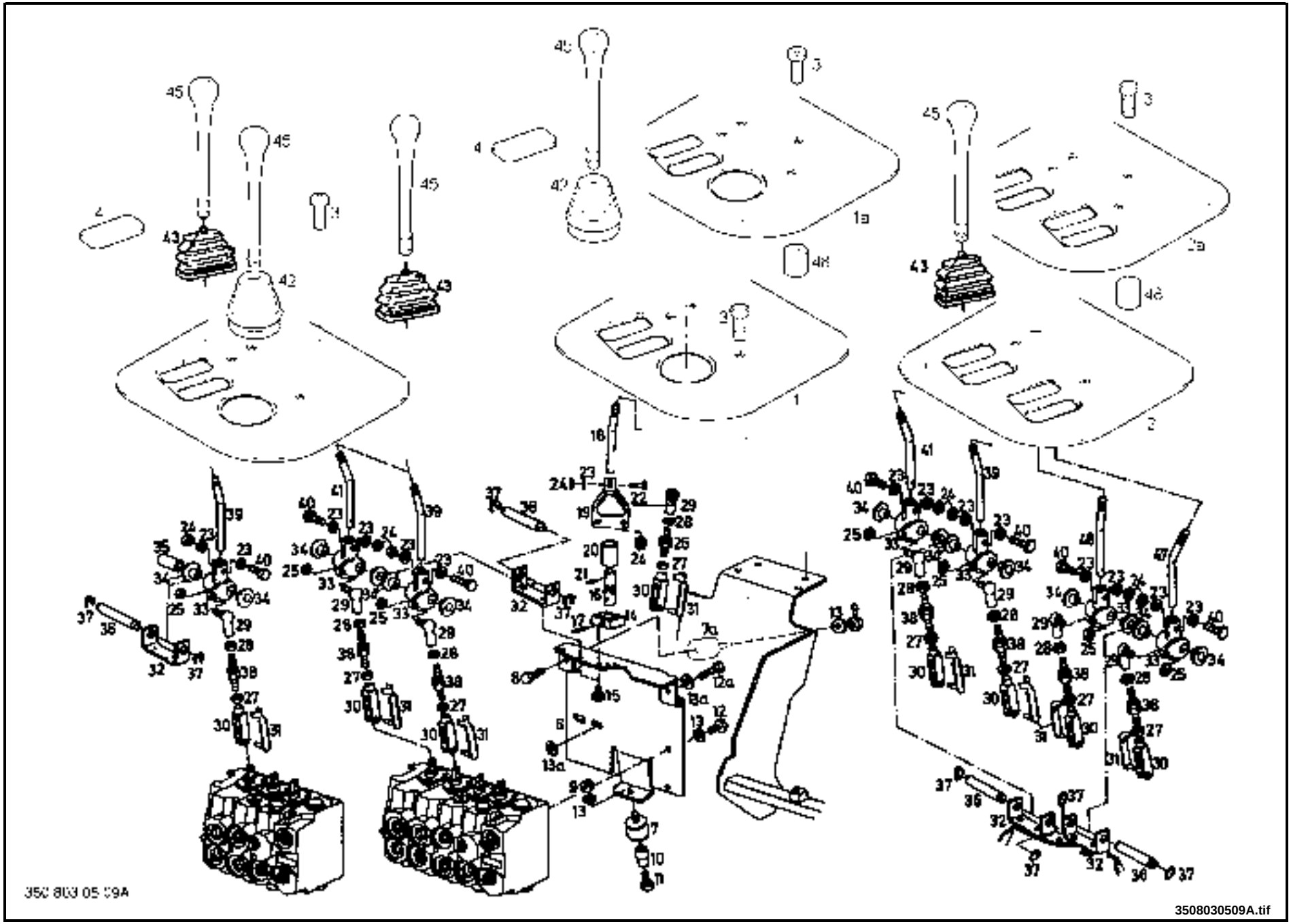

https://truckmanualshub.com/

ACTUATOR OF PILOT VALVE

Pos.	Part-No.	I	Designation	Qantity	replaced by	Remarks
1	350 441 65 08	3	cover	1	350 441 65 14	
1a	350 441 65 14		cover (central lever hydraulic)	1		
2	350 441 65 07	3	cover	1	350 441 65 13	only for single lever hydraulic control
2a	350 441 65 13		cover (single lever hydraulic)	1		only for single lever hydraulic control
3	9 087 101 128	1	screw pan head ISO 7045 M6X16-7985-4.8A2C	3		=>| 02/2004
3	9 087 101 140	1	screw ISO 7045	4		03/2004 |=>
4	000 918 25 40		cap locking	1-2		depending on version
6	350 440 30 00		console assy.	1		
7	000 965 21 05		rubber buffer DIN 95363 BM8x30	1		
7a	000 965 21 10		rubber bumper DIN 95363	2		
8	9 008 311 174	1	hexagon head screw ISO 4017 M8x10-8.8-A2C	2	9 008 311 175	
8	9 008 311 175	1	hexagon head screw ISO 4017 M8x12-8.8-A2C	2		
9	9 210 281 110	1	nut ISO 4032 934-M8-8A2C	a.req.		
10	000 916 09 00		bush	1		
11	9 045 311 183	1	socket-head screw ISO 4762 M8x25-8.8	1		
12	9 008 311 177	1	hexagon head screw ISO 4017 M8x16-8.8-A2C	2		
12a	9 008 311 180	1	hexagon head screw ISO 4017 M8x20-8.8-A2C	1		
13	9 292 003 018	1	washer DIN 125 DIN 125-A8,4x16x1,6-A2C	4		
13a	9 309 412 018	1	washer DIN 7349 DIN 7349-8.4x21x4,8A2C	2		
14	000 918 74 17		support 15X30X45	1		
15	9 045 311 177	1	socket-head screw ISO 4762 M8x16-8.8-A2C	2-4		depending on version
16	000 934 13 01		cardan joint	1		
17	9 387 620 219	1	spring cotter ISO 8748 ISO 8748-4x30-ST	1		
18	350 528 01 00		rod	1		
19	351 528 10 35		lever	1		
20	000 964 23 42		bush	1		

1 = Packaged quantities 2 = Restricted availability 3 = Parts being phased out 4 = not available individually 5 = see separate list

https://truckmanualshub.com/

ACTUATOR OF PILOT VALVE

05

Pos.	Part-No.	I	Designation	Qantity	replaced by	Remarks
21	9 387 620 211	1	spring cotter ISO 8748 ISO 8748-4x16-ST	1		
22	9 008 346 138	1	hexagon head screw ISO 4017 M6x35-10.9	1		
23	9 292 003 014	1	washer ISO 7089 A6,4-ST50-A2C	2-8		depending on version
24	9 210 346 090	1	nut ISO 4032	1-4		
25	9 214 317 110	1	hexagon nut ISO 7042 M8-8-A2C	1-4		depending on version
26	000 912 35 63		threaded pin	2		
27	9 210 281 110	1	nut ISO 4032 934-M8-8A2C	1-4		depending on version
28	9 210 281 111	1	hexagon nut ISO 4032 DIN 934-M8-8A2C LH.	1-4		depending on version
29	9 798 002 051		ball joint DIN 71802 CS13L-Y71802-A2C	1-4		depending on version
30	9 796 470 070	1	fork clevis DIN 71572 71572-G8x32A2C	1-4		depending on version
31	000 934 25 13	1	bolt with cotter WN 17441 10X20-A2C	1-4		depending on version
32	351 527 30 05		bracket	1-2		=>| 12/2001
32	351 527 30 11		bracket	1-2		01/2002 |=>
33	351 528 10 16		lever	1-4		=>| 12/2001 depending on version
33	351 528 10 11		lever	1-4		01/2002 |=> depending on version
	9 294 003 022		washer DIN 433 DIN 433-13x20x2-A2C	1-2		for pos. 33 only for axial play over 2 mm
34	000 916 50 57	1	bush	2-8		=>| 12/2001 depending on version
34	000 923 01 53		bearing bush	2-8		01/2002 |=> depending on version
35	000 916 12 47		bush 12x16x45	1		=>| 12/2001 only for single auxiliary hydraulic services
35	000 916 14 06		bush	1		01/2002 |=> only for single auxiliary hydraulic services
36	000 912 15 28		bolt	1-2		=>| 12/2001
36	000 912 11 42		bolt	1-2		H2X350L03682 |=>

1 = Packaged quantities 2 = Restricted availability 3 = Parts being phased out 4 = not available individually 5 = see separate list

https://truckmanualshub.com/

ACTUATOR OF PILOT VALVE

Pos.	Part-No.	I	Designation	Qantity	replaced by	Remarks
37	000 907 33 18		spring clip WN 14412-12	2		=>| 12/2001
37	000 907 33 14	1	locking disc 14-A2C	2		H2X350L03682 |=>
38	000 912 35 64		pin threaded M8R/M8LX70	1-4		depending on version
39	350 528 01 05		rod	1		
40	9 008 346 138	1	hexagon head screw ISO 4017 M6x35-10.9	1-4		depending on version
41	350 528 01 10		rod	1		
42	000 962 55 41		bellows	1		
43	000 962 55 42		bellows	1-4		depending on version
45	000 931 20 06		lever handle	1-4		depending on version
46	350 528 01 15		rod	1		only for single lever hydraulic control
47	350 528 01 20		rod	1		only for single lever hydraulic control
48	000 965 41 39		spring element	4		03/2004 |=>

1 = Packaged quantities 2 = Restricted availability 3 = Parts being phased out 4 = not available individually 5 = see separate list

https://truckmanualshub.com/

https://truckmanualshub.com/

Register 06 : ELECTRIC EQUIPMENT

06/01	00 - 06	ELECTRIC ARMATURES AND BATTERY
06/02	00 - 01	LINDE FORKLIFT DATA MANAGEMENT (LFM)
06/03	00 - 03	MAIN CABLE LOOM DIESEL VERSION
06/04	00 - 03	MAIN CABLE LOOM LPG VERSION
06/05	00 - 03	MAIN CABLE LOOM LPG VERSION CATALYZER GOVERNED
06/06	00 - 02	SET CABLE
06/07	00 - 03	SET CABLE - LFM
06/08	00 - 02	SPOT LIGHT 11/2004 |=>
06/09	00 - 04	TRUCK LIGHTING, WARNING BLINKER SYSTEM AND DANGER SIGNAL
06/10	00 - 02	FLASH LIGHT AND WARNING LIGHTS
06/11	00 - 03	VEHICLE LIGHTING VERSION JAPAN
06/12	00 - 02	CABLE TREES FOR LIGHTING
06/13	00 - 02	CABLE LOOMS FOR LIGHTING VERSION JAPAN
06/14	00 - 02	HARNES FOR PARTICLE FILTER =>I H2X350N03290
06/14A	00 - 02	HARNES FOR PARTICLE FILTER H2X350N03291 |=>
06/15	00 - 02	HARNESS FOR FLASH LIGHTS / CONSOLE / LIGHT WARNING
06/16	00 - 01	HARNESS LPG ULTRASONIC VOLUME INDICATOR

https://truckmanualshub.com/

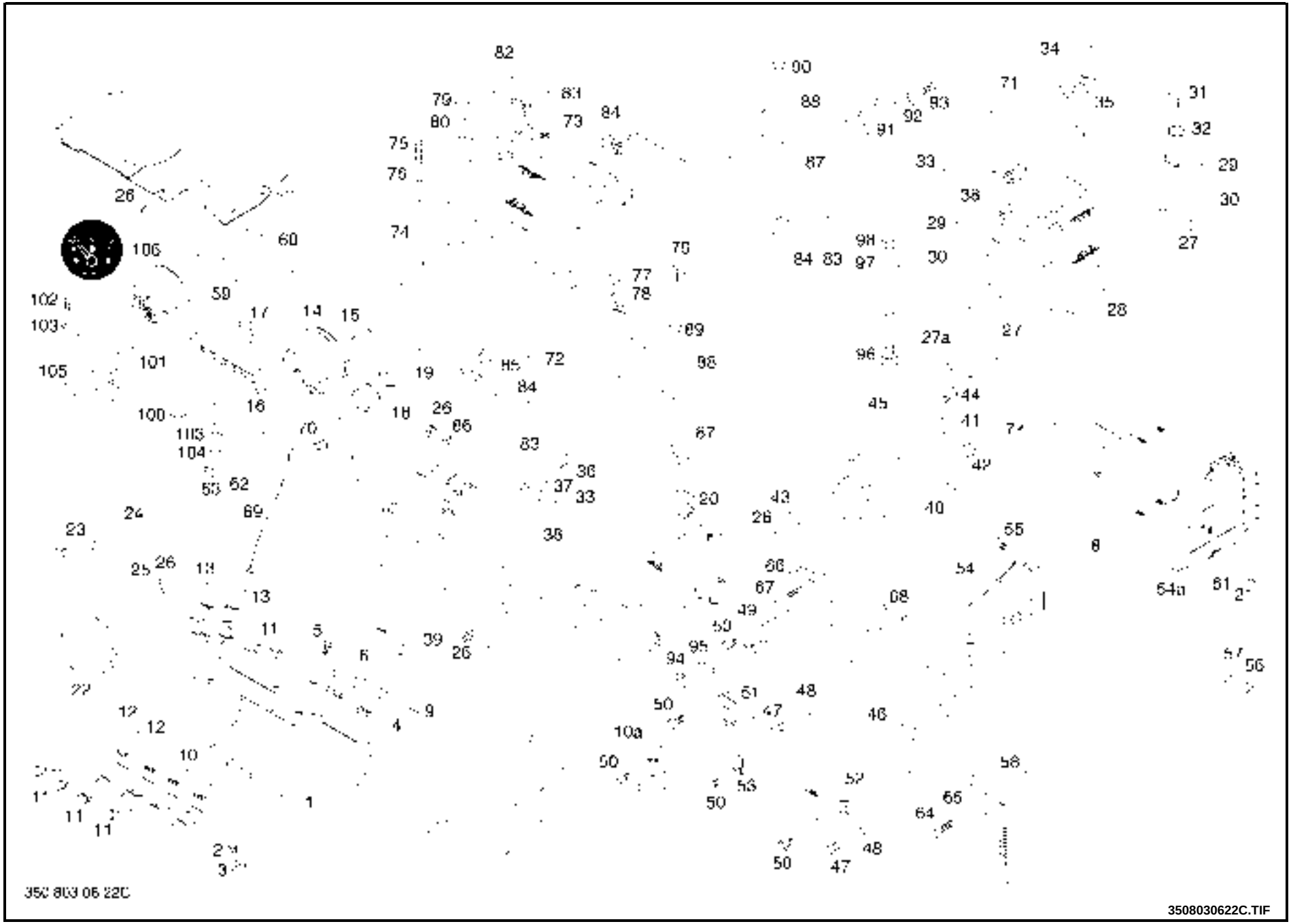

https://truckmanualshub.com/

ELECTRIC ARMATURES AND BATTERY

Pos.	Part-No.	I	Designation	Qantity	replaced by	Remarks
1	350 363 14 09		support	1		
2	9 087 144 093	1	pan head screw ISO 7045 M5x8-4.8-H-A2C	3		
3	9 292 003 012	1	washer ISO 7089 A5,3-ST-A2C	3		
4	7 9190 00 106		fuse box	1/3		
5	9 008 610 065	1	hexagon head screw DIN 7500 DEM4x10-ST-A3B	2/6		
6	7 9160 40 000		fuse DIN 72581 1A	a.req.		
6	7 9190 86 803		fuse element DIN 72581 C5-32V	a.req.		
6	7 9190 86 805		fuse element DIN 72581 C10-32V	a.req.		
6	7 9190 86 806		fuse element DIN 72581 C15-32V	a.req.		
6	7 9190 86 807		fuse element DIN 72581 C20-32V	a.req.		
7	9 265 316 110		nut hexagon DIN 6923 M8-8-A2C	2		
8	350 420 28 05		support assy.	1		10/2004 |=>
9	7 9159 99 210		bridge	a.req.		
10	000 973 13 15		relay 12v 70a	2		starting relay + auxiliary relay
10a	000 973 13 15		relay 12v 70a	1		fan
11	9 008 610 093	1	hexagon head screw DIN 7500 DEM5x8-ST-A3B	6		
12	000 973 25 02		blinker relay	1		
12	7 9162 91 264		relay 12V	1		drivers seat traction cut off
12	7 9162 91 264		relay 12V	1		danger signal
13	7 9162 91 022	3	relay	2	7 9162 91 040	windscreen wiper front / rear
13	7 9162 91 040		relay windshield wiper	2		windscreen wiper front / rear
14	000 946 07 59	3	indicator unit	1	000 946 07 62	
14	000 946 07 62	3	indicator unit	1	000 946 07 67	
14	000 946 07 67	3	indicator unit	1	000 946 07 76	
14	000 946 07 76	3	indicator unit	1	7 9172 92 553	
14	7 9172 92 553		indicator unit	1		

1 = Packaged quantities 2 = Restricted availability 3 = Parts being phased out 4 = not available individually 5 = see separate list

https://truckmanualshub.com/

Pos.	Part-No.	I	Designation	Qantity	replaced by	Remarks
16	000 964 46 34		frame	1		=>| 10/2001 for 3514380201
17	000 918 25 00		diaphragm	6		02/2002|=> =>|06/2005 C1X350T00358|=> =>|C1X350T00373 10/2007|=>
17	000 918 25 00		diaphragm	3		=>|01/2002 07/2005|=> 09/2007|=>
18	000 973 02 12		igntn starter switch	1		
19	000 973 04 41		key (single)	1		
20	000 943 10 01		switch pressure 50 mbar	1		
21	9 210 281 090		hexagon nut ISO 4032 DIN 934-M6-8A2C	4		
22	000 973 15 15		horn	1		
23	9 007 311 199		hexagon head bolt ISO 4014 M8x70-8.8-A2C	1		
24	000 917 14 06		tube spacer	1		
25	9 323 620 018	1	spring washer DIN 137 DIN 137-B8-A2C	1		
26	9 210 281 110	1	nut ISO 4032 934-M8-8A2C	5		
27	350 423 02 01		support	2		=>| 02/2002
27a	351 423 02 00		support	2		03/2002 |=>
28	7 9199 00 223		battery DIN 72311 12V 45Ah	1	000 971 56 76	LPG
28	000 971 56 76		*****	1		LPG
28	7 9199 00 235		battery	1		particle filter
29	9 008 311 188	1	hexagon head screw ISO 4017 M8x35-8.8-A2C	2		=>| 02/2002
30	9 309 412 018	1	washer DIN 7349 DIN 7349-8.4x21x4,8A2C	2		
31	9 008 311 177	1	hexagon head screw ISO 4017 M8x16-8.8-A2C	1		
32	9 330 620 018	1	washer lock serrated DIN 6798 6798-A8,4-PHR	1		
33	000 975 70 33		cable earth	1		
34	000 931 05 07		handle	1		
35	000 901 11 04		screw	1		

1 = Packaged quantities 2 = Restricted availability 3 = Parts being phased out 4 = not available individually 5 = see separate list

https://truckmanualshub.com/

Pos.	Part-No.	I	Designation	Qantity	replaced by	Remarks
36	9 045 311 236	1	socket-head screw ISO 4762 M10x20-8.8-A2C	1		
37	9 291 003 020	1	washer DIN 125 B10,5x20x2-HV200-A2C	1		
38	000 975 75 24		cable	1		
39	000 962 50 03		cap protective	1		
40	350 363 42 07		angle	1		LPG
41	9 045 311 236	1	socket-head screw ISO 4762 M10x20-8.8-A2C	2		
42	9 008 311 177	1	hexagon head screw ISO 4017 M8x16-8.8-A2C	2		
43	9 292 003 018	1	washer DIN 125 DIN 125-A8,4x16x1,6-A2C	2		
44	9 008 613 105	1	hexagon head screw DIN 7500 DM5X25-ST-A3B	2		
45	000 977 28 05		cable ignition	1		
46	350 423 02 02		support	1		
47	9 008 311 183	1	hexagon head screw ISO 4017 M8x25-8.8-A2C	2		
48	9 309 412 018	1	washer DIN 7349 DIN 7349-8.4x21x4,8A2C	2		
49	350 363 42 02	1	angle	1		
50	9 008 610 096	1	hexagon head screw DIN 7500 DEM5x12-ST-A3B	a.req.		
51	353 363 14 01		support	1		
52	7 9162 99 071		relay	1		
53	000 955 22 23		clip support DIN 3016-1 D1-25X15-W1-1	1		
54	390 360 58 15	3	traction electronic assy. LHC	1	390 360 58 66	
54	390 360 58 66		traction electronic assy. LHC	1		=>| C1X350S00072
54a	390 360 13 04		control unit electronic assy. LHC-11/12	1		C1X350S00073 |=>
54	390 360 83 66		traction electronic ex.assy.	1		=>| C1X350S00072
54a	390 360 43 04		electron. control ex.assy.	1		C1X350S00073 |=>
54	390 360 58 04		traction electronic assy.	1		=>| 10/2004 to 16 km/h
54	390 360 83 04		traction electronic ex.assy.	1		=>| 10/2004 to 16 km/h
54a	390 360 13 42		control unit electronic assy.	1		to 16 km/h

1 = Packaged quantities 2 = Restricted availability 3 = Parts being phased out 4 = not available individually 5 = see separate list

https://truckmanualshub.com/

ELECTRIC ARMATURES AND BATTERY

Pos.	Part-No.	I	Designation	Qantity	replaced by	Remarks
54a	390 360 13 02		control unit electronic assy.	1		to 14 km/h
54a	390 360 13 46		control unit electronic assy.	1		to 9 km/h
54a	390 360 13 45		control unit electronic assy.	1		to 6 km/h
55	9 008 311 132	1	hexagon head screw ISO 4017 M6x20-8.8-A2C	2		=>|C1X350S00072
56	9 210 281 090	1	hexagon nut ISO 4032 DIN 934-M6-8A2C	2		=>|C1X350S00072
56	9 210 281 090	1	hexagon nut ISO 4032 DIN 934-M6-8A2C	4		C1X350S00073|=>
57	9 307 003 014	1	washer DIN 9021 B6,4-ST-A2C	2		=>|C1X350S00072
57	9 307 003 014	1	washer DIN 9021 B6,4-ST-A2C	4		C1X350S00073|=>
58	000 973 70 05		control apparatus	1		regulated catalyzer converter
59	7 9164 00 157		resistor	1		
60	9 045 316 211	1	screw ISO 4762 M8x135-8.8-A2C	1		
61	9 292 003 014	1	washer ISO 7089 A6,4-ST50-A2C	4		
62	9 210 281 090	1	hexagon nut ISO 4032 DIN 934-M6-8A2C	1		=>|04/2006
63	9 330 629 014	1	washer lock serated DIN 6798 6.4X11X0.7-6798-A2C	1		=>|04/2006
64	9 008 613 105	1	hexagon head screw DIN 7500 DM5X25-ST-A3B	4		
65	9 292 003 012	1	washer ISO 7089 A5,3-ST-A2C	4		
66	350 363 42 09		angle	1		regulated catalyzer converter
67	9 041 201 046	1	socket-head screw ISO 1207 AM3x40-4.8-A2C	2		regulated catalyzer converter
68	000 918 50 17		bracket 2X8X34X25.4	1		regulated catalyzer converter
69	000 937 25 02		rope	1		
70	9 087 144 125	1	screw pan head ISO 7045 M6X10-7985-4.8A2C	1		=>|04/2006
72	350 420 50 01		console assy.	1		Diesel
73	7 9199 00 245		battery 12V 88Ah	1		Diesel
74	350 423 02 01		support	1		Diesel
75	9 008 311 188	1	hexagon head screw ISO 4017 M8x35-8.8-A2C	1		
76	9 309 412 018	1	washer DIN 7349 DIN 7349-8.4x21x4,8A2C	1		
77	9 008 311 177	1	hexagon head screw ISO 4017 M8x16-8.8-A2C	1		

1 = Packaged quantities 2 = Restricted availability 3 = Parts being phased out 4 = not available individually 5 = see separate list

https://truckmanualshub.com/

ELECTRIC ARMATURES AND BATTERY

Pos.	Part-No.	I	Designation	Qantity	replaced by	Remarks
78	9 330 620 018	1	washer lock serrated DIN 6798 6798-A8,4-PHR	1		
79	9 008 311 239	1	hexagon head screw ISO 4017 M10x25-8.8-A2C	2		
80	9 291 003 020	1	washer DIN 125 B10,5x20x2-HV200-A2C	1		
82	000 962 50 64		cap	1		
83	000 975 75 38		cable starter	1		
	000 931 39 00		clamp 19x24/4	2		to pos. 83
84	000 975 70 39		cable earth	1		
85	9 008 311 236	1	hexagon head screw ISO 4017 M10x20-8.8-A2C	1		
86	9 210 281 070	1	hexagon nut ISO 4032 M5-8-A2C	1		
87	000 955 08 12		clip DIN 3015-3 Z-KP-2-R-15-15-PP	2		
88	000 955 15 00		cover plate DIN 3015-3 Z-DP-2-W1-A2C	2		
89	9 007 311 193	1	hexagon head bolt ISO 4014 M8x45-8.8-A2C	1		
90	9 007 311 195	1	hexagon head bolt ISO 4014 M8x50-8.8-A2C	1		
91	350 360 60 01		support assy.	1		
92	9 307 003 014	1	washer DIN 9021 B6,4-ST-A2C	1		
93	9 008 311 128	1	hexagon head screw ISO 4017 M6x16-8.8-A2C	1		
94	7 9160 40 014		type fuse-link 50A-rot	a.req.		
95	7 9160 40 010		type fuse-link 30A-grün	a.req.		
96	9 027 311 183	1	screw DIN 603 M8X25-603-8.8-A2C	2		03/2000 |=>
97	9 309 412 018	1	washer DIN 7349 DIN 7349-8.4x21x4,8A2C	2		03/2000 |=>
98	9 210 281 110	1	nut ISO 4032 934-M8-8A2C	2		03/2000 |=>
99	7 0331 49 005	3	tape Antistatic	1	7 0331 49 015	Loctite nr. 243
99	7 0331 49 015		tape Antistatic	1		
100	000 964 03 17		cable grommet 11/8x3	1		
101	7 9145 90 532		housing	1		ultra sound sensor
102	9 008 311 068	1	hexagon head screw ISO 4017 M4x16-8.8-A2C	2		
103	9 292 003 010	1	washer DIN 125 A4.3x9x0.8-125-A2C	2		

1 = Packaged quantities 2 = Restricted availability 3 = Parts being phased out 4 = not available individually 5 = see separate list

https://truckmanualshub.com/

ELECTRIC ARMATURES AND BATTERY

Pos.	Part-No.	I	Designation	Qantity	replaced by	Remarks
104	9 210 281 060	1	hexagon nut ISO 4032 DIN 934-M4-8A2C	2		
105	000 964 03 05		cable grommet 11.5X7.5X1.5	1		
106	7 9172 92 511		indicator unit	1		ultra sound sensor
107	000 955 30 68		cable tie 4.6x205	1		

06

1 = Packaged quantities 2 = Restricted availability 3 = Parts being phased out 4 = not available individually 5 = see separate list

https://truckmanualshub.com/

https://truckmanualshub.com/

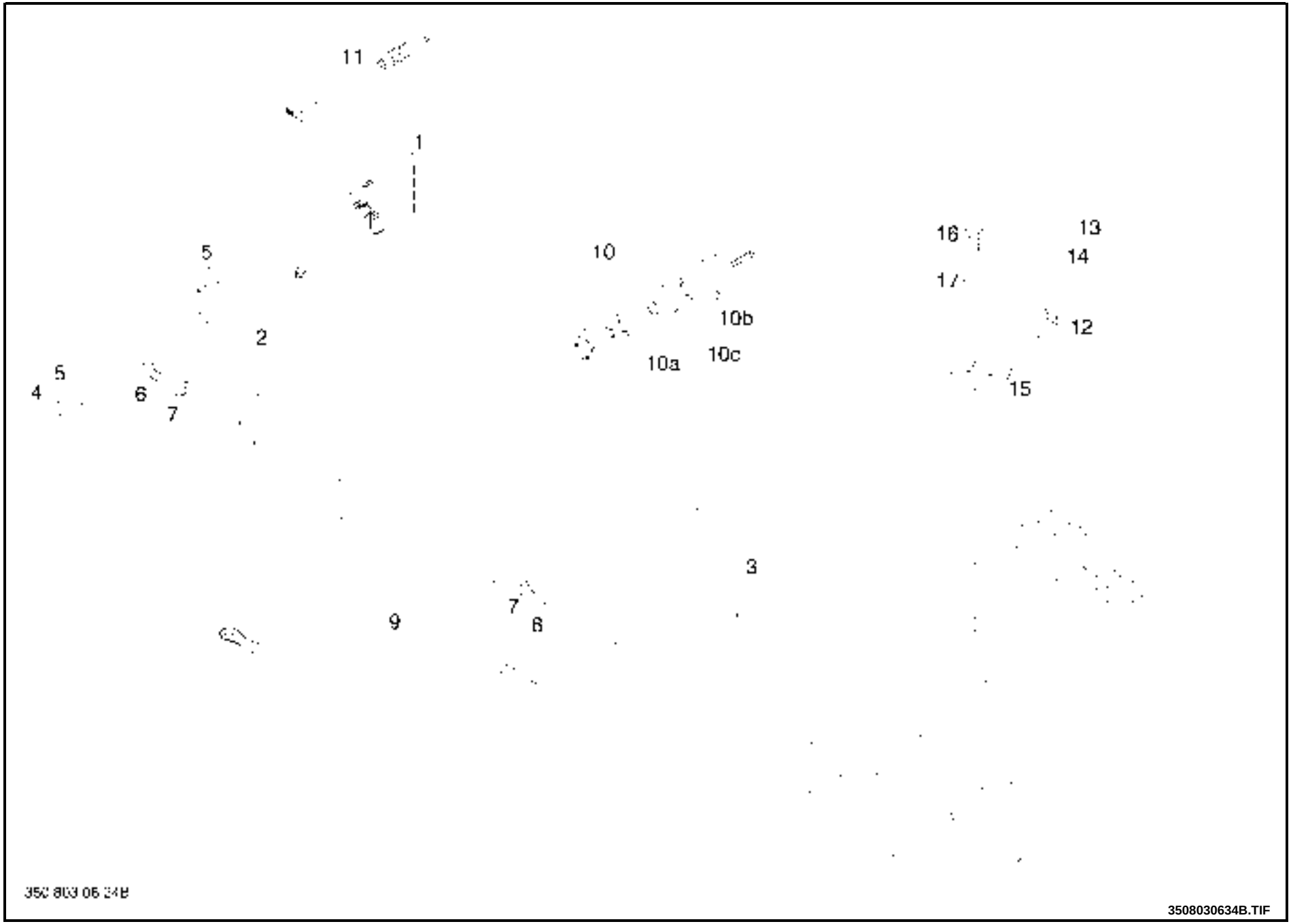

06

https://truckmanualshub.com/

LINDE FORKLIFT DATA MANAGEMENT (LFM)

Pos.	Part-No.	I	Designation	Qantity	replaced by	Remarks
1	390 360 13 13	3	control unit electronic assy. FDE 11/10	1	390 360 13 68	Access
1	390 360 13 68	3	control unit electronic assy. FDE 11/10	1	390 360 13 78	Access
1	390 360 13 78	3	electronic control unit assy. FDE 21/10	1	390 360 13 98	Access
1	390 360 13 98		electronic control unit assy. FDE-21/12	1		Access
1	390 360 13 14	3	control unit electronic assy. FDE 11/11	1	390 360 13 69	Basic
1	390 360 13 69	3	control unit electronic assy. FDE 11/11	1	390 360 13 79	Basic
1	390 360 13 79	3	electronic control unit assy. FDE 21/11	1	390 360 13 99	Basic
1	390 360 13 99		electronic control unit assy. FDE-21/13	1		Basic
2	350 363 14 55		support	1		
3	352 438 02 02		dashboard	1		
4	9 210 281 060	1	hexagon nut ISO 4032 DIN 934-M4-8A2C	3		
5	9 292 003 010	1	washer DIN 125 A4.3x9x0.8-125-A2C	6		
6	9 008 311 132	1	hexagon head screw ISO 4017 M6x20-8.8-A2C	3		
7	9 309 412 014	1	washer DIN 7349 DIN 7349-6,4x17x3A2C	6		
8	9 210 281 090	1	hexagon nut ISO 4032 DIN 934-M6-8A2C	3		
9	000 977 39 00	1	cable electric form C	1		
10	7 9154 92 600		key switch LFM	1		
10a	353 438 11 03		plate, sheet metal	1		
10b	9 289 003 346		shim DIN 988 22X32X1-988	1		
10c	000 963 02 02		o-ring DIN 3770 20x2,5-P90	1		
11	300 381 03 06		harness LFM	1		
12	390 360 51 06		module electronic assy.	1		
13	9 008 311 126	1	hexagon head screw ISO 4017 M6x12-8.8-A2C	2		
14	9 292 003 014	1	washer ISO 7089 A6,4-ST50-A2C	2		
15	350 363 12 00		support	1		
16	9 008 311 241	1	hexagon head screw ISO 4017 M10x30-8.8-A2C	2		
17	9 309 412 020	1	washer DIN 7349 DIN 7349-10,5x25x4	2		

1 = Packaged quantities 2 = Restricted availability 3 = Parts being phased out 4 = not available individually 5 = see separate list

https://truckmanualshub.com/

MAIN CABLE LOOM DIESEL VERSION

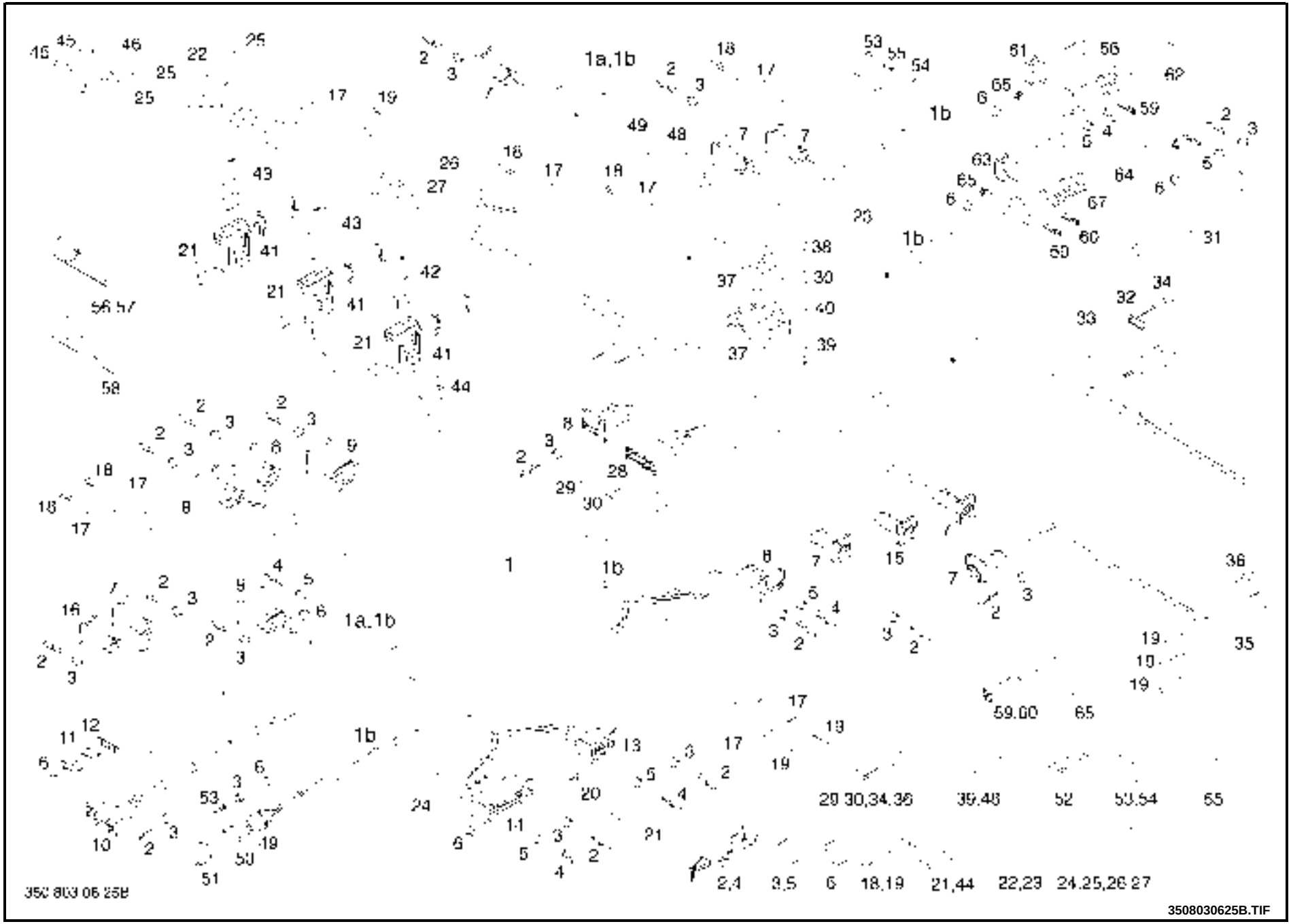

06

https://truckmanualshub.com/

MAIN CABLE LOOM DIESEL VERSION

Pos.	Part-No.	I	Designation	Qantity	replaced by	Remarks
1	350 381 05 55		harness	1		=>| C1X350M00009
1a	350 381 05 56		main harness	1		C1X350M00010 |=> =>| 12/2004
1b	350 381 05 59		main harness	1		01/2005 |=>
2	002 978 05 11		contact JPT-0,5-1	a.req.		
3	7 9149 99 019		seal 0,35-1	a.req.		
4	7 9125 03 140		contact	a.req.		
5	7 9149 99 020		seal AD-1,0-2,5	a.req.		
6	7 9149 99 025		stopper	a.req.		
7	7 9125 03 146		housing 2 way	6		=>| C1X350M00009
7	7 9125 03 146		housing 2 way	7		C1X350M00010 |=>
8	7 9125 03 145		housing 3P	4		
9	7 9125 03 835		housing 4 way	1		=>| C1X350M00009
9	7 9125 03 835		housing 4 way	2		H2X350L02566 |=>
10	7 9125 03 147		plug housing 4 way	1		
11	7 9125 03 122		tab housing 4 way	1		
12	7 9149 99 022		seal 4 way	1		
13	7 9125 03 123		plug housing 6P	1		
14	7 9125 03 173		plug housing 16P	1		
15	7 9125 03 815		housing tab	1		
16	7 9150 06 008		housing	1		
17	7 9106 00 056		insulation sleeve E6,3-4,8	8		
18	7 9125 11 115		receptacle faston DIN 46247	a.req.		
19	000 975 15 25		receptacle faston DIN 46247 6,3-2,5-MS	a.req.		
20	7 9125 15 503		housing 1 way	1		
21	7 9125 15 002		receptacle faston	a.req.		
22	7 9125 00 242		cable shoe DIN 46225	a.req.		
23	7 9125 00 254		cable shoe DIN 46225	a.req.		

1 = Packaged quantities 2 = Restricted availability 3 = Parts being phased out 4 = not available individually 5 = see separate list

https://truckmanualshub.com/

MAIN CABLE LOOM DIESEL VERSION

Pos.	Part-No.	I	Designation	Qantity	replaced by	Remarks
24	7 9125 00 256		connector DIN 46225	a.req.		
25	7 9125 00 261		cable shoe DIN 46225 A8-10	a.req.		
26	7 9125 00 257		cable shoe DIN 46225	a.req.		
27	7 9125 00 262		cable shoe DIN 46225 A10-10	a.req.		
28	000 975 17 08		socket housing 8-P	1		
29	7 9125 11 315		connecting bush DIN 46340	a.req.		
30	000 975 15 29		tab DIN 46340	a.req.		
31	7 9125 03 535		housing socket	1		
32	7 9190 95 010		housing 3-way	1		
33	7 9190 95 012		cap protective	1		
34	7 9125 11 366		faston DIN 46340	a.req.		
35	000 975 17 05		socket housing 2-P	1		
36	7 9125 11 369		receptacle faston DIN 46340 B6,3-6 Ms	2		
38	7 9125 11 308		receptacle faston DIN 46340 B2,8-1 Ms	a.req.		
39	7 9125 12 212		tab DIN 46343	a.req.		
40	7 9125 11 325		receptable faston DIN 46340	a.req.		
41	7 9190 95 043		socket fuse	3		
42	7 9160 40 014		type fuse-link 50A-rot	2		
43	7 9160 40 010		type fuse-link 30A-grün	1		
44	7 9125 15 004		housing	1		
45	000 973 90 05		cap	2		
46	7 9199 99 001		protective cap	1		
47	000 975 17 04		tab housing 2x6,3	1		
48	7 9125 12 242		receptable faston DIN 46343 B6,3-1-Ms	2		
49	7 9150 06 016		plug	1		
50	000 905 90 00		nut	1		
51	000 975 50 09		cover	1		

1 = Packaged quantities 2 = Restricted availability 3 = Parts being phased out 4 = not available individually 5 = see separate list

https://truckmanualshub.com/

MAIN CABLE LOOM DIESEL VERSION

Pos.	Part-No.	I	Designation	Qantity	replaced by	Remarks
52	7 9125 03 112		contact	a.req.		
53	7 9190 95 110		contact 0.75-1.5	a.req.		
54	7 9190 95 114		contact 1.5-2.5	a.req.		
55	7 9194 90 710		diode 1N4004	1		
37	7 9162 99 960		moulding	2		
56	000 950 22 35		clip fastening assy.	a.req.		=>| 09/2000
57	000 950 22 82		pipe clamp assy.	a.req.		10/2000 |=>
58	000 950 22 16	3	clip assy.	a.req.	000 950 22 35	
59	7 9125 03 080		contact	a.req.		
60	7 9125 03 081		contact	a.req.		
61	7 9125 33 702		lid	1		
62	7 9125 03 322		lock	1		
63	7 9125 33 706		lid	1		
64	7 9125 03 320		lock	1		
65	7 9149 96 000		plug	a.req.		
66	----------	4	housing	1		
67	----------	4	housing	1		

1 = Packaged quantities 2 = Restricted availability 3 = Parts being phased out 4 = not available individually 5 = see separate list

https://truckmanualshub.com/

MAIN CABLE LOOM LPG VERSION

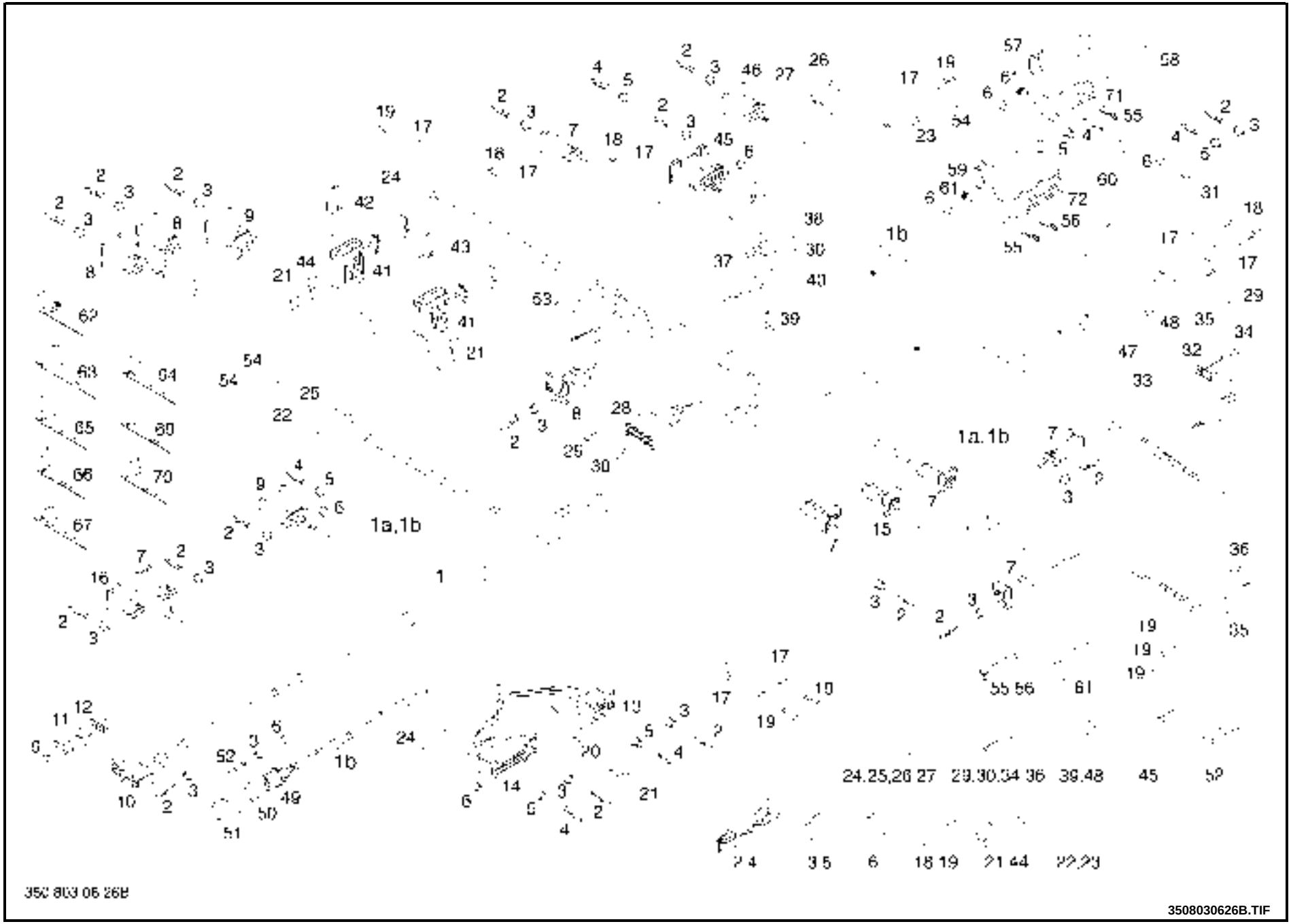

06

https://truckmanualshub.com/

MAIN CABLE LOOM LPG VERSION

Pos.	Part-No.	I	Designation	Qantity	replaced by	Remarks
1	350 381 05 53		harness	1		=>| 07/2000
	350 381 03 35		harness	1		to pos. 1 alternator - starter motor
1a	350 381 05 57		main harness	1		08/2000 |=> =>| 09/2004
1b	350 381 05 60		main harness	1		10/2004 |=>
2	002 978 05 11		contact JPT-0,5-1	a.req.		
3	7 9149 99 019		seal 0,35-1	a.req.		
4	7 9125 03 140		contact	a.req.		
5	7 9149 99 020		seal AD-1,0-2,5	a.req.		
6	7 9149 99 025		stopper	a.req.		
7	7 9125 03 146		housing 2 way	4		=>| 07/2000
7	7 9125 03 146		housing 2 way	5		08/2000 |=>
8	7 9125 03 145		housing 3P	2		
9	7 9125 03 835		housing 4 way	1		=>| 07/2000
9	7 9125 03 835		housing 4 way	2		H2X350L02566 |=>
10	7 9125 03 147		plug housing 4 way	1		
11	7 9125 03 122		tab housing 4 way	1		
12	7 9149 99 022		seal 4 way	1		
13	7 9125 03 123		plug housing 6P	1		
14	7 9125 03 173		plug housing 16P	1		
15	7 9125 03 815		housing tab	1		
16	7 9150 06 008		housing	1		
17	7 9106 00 056		insulation sleeve E6,3-4,8	8		
18	7 9125 11 115		receptacle faston DIN 46247	a.req.		
19	000 975 15 25		receptacle faston DIN 46247 6,3-2,5-MS	a.req.		
20	7 9125 15 503		housing 1 way	1		
21	7 9125 15 002		receptacle faston	a.req.		
22	7 9125 00 242		cable shoe DIN 46225	a.req.		

1 = Packaged quantities 2 = Restricted availability 3 = Parts being phased out 4 = not available individually 5 = see separate list

https://truckmanualshub.com/

MAIN CABLE LOOM LPG VERSION

Pos.	Part-No.	I	Designation	Qantity	replaced by	Remarks
23	7 9125 00 248		cable shoe DIN 46225 A5-2,5	a.req.		
24	7 9125 06 052		shoe cable DIN 46234 8-16	a.req.		
25	7 9125 00 261		cable shoe DIN 46225 A8-10	a.req.		
26	7 9125 00 257		cable shoe DIN 46225	a.req.		
27	7 9125 00 262		cable shoe DIN 46225 A10-10	a.req.		
28	000 975 17 08		socket housing 8-P	1		
29	7 9125 11 315		connecting bush DIN 46340	a.req.		
30	000 975 15 29		tab DIN 46340	a.req.		
31	7 9125 03 535		housing socket	1		
32	7 9190 95 010		housing 3-way	1		
33	7 9190 95 012		cap protective	1		
34	7 9125 11 366		faston DIN 46340	a.req.		
35	000 975 17 05		socket housing 2-P	1		
36	7 9125 11 369		receptacle faston DIN 46340 B6,3-6 Ms	a.req.		
37	7 9162 99 960		moulding	1		
38	7 9125 11 308		receptacle faston DIN 46340 B2,8-1 Ms	a.req.		
39	7 9125 12 212		tab DIN 46343	a.req.		
40	7 9125 11 325		receptable faston DIN 46340	a.req.		
41	7 9190 95 043		socket fuse	2		
42	7 9160 40 014		type fuse-link 50A-rot	1		
43	7 9160 40 010		type fuse-link 30A-grün	1		
44	7 9125 15 004		housing	a.req.		
45	7 9150 02 530		housing plug	1		
46	7 9125 03 126		housing 3 way	1		
47	000 975 17 04		tab housing 2x6,3	1		
48	7 9125 12 242		receptable faston DIN 46343 B6,3-1-Ms	2		
49	7 9150 06 016		plug	1		

1 = Packaged quantities 2 = Restricted availability 3 = Parts being phased out 4 = not available individually 5 = see separate list

https://truckmanualshub.com/

MAIN CABLE LOOM LPG VERSION

Pos.	Part-No.	I	Designation	Qantity	replaced by	Remarks
50	000 905 90 00		nut	1		
51	000 975 50 09		cover	1		
52	7 9125 03 112		contact	a.req.		
53	000 976 45 00		distributor 8,5-8,5-10	1		
54	7 9199 99 001		protective cap	3		
55	7 9125 03 080		contact	a.req.		
56	7 9125 03 081		contact	a.req.		
57	7 9125 33 702		lid	1		
58	7 9125 03 322		lock	1		
59	7 9125 33 706		lid	1		
60	7 9125 03 320		lock	1		
61	7 9149 96 000		plug	a.req.		
62	000 950 22 16	3	clip assy.	a.req.	000 950 22 35	
62	000 950 22 35		clip fastening assy.	a.req.		
63	000 950 22 16		clip assy.	a.req.		
64	000 950 22 28		clip fastening assy.	a.req.		
65	000 950 22 18		clip assy.	a.req.		
66	000 950 22 32		clip fastening assy.	a.req.		
67	000 950 22 33		clip fastening assy.	a.req.		
68	000 955 03 02		clip	a.req.	000 950 22 76	
	000 950 22 76		pipe clamp assy.	a.req.		
69	000 955 26 04		clip fastening assy.	a.req.		
70	000 950 22 34		clip fastening assy.	a.req.		
71	----------	4	housing	1		
72	----------	4	housing	1		
	000 964 03 35		grommet cable 20/12X4	2		

1 = Packaged quantities 2 = Restricted availability 3 = Parts being phased out 4 = not available individually 5 = see separate list

https://truckmanualshub.com/

MAIN CABLE LOOM LPG VERSION CATALYZER GOVERNED

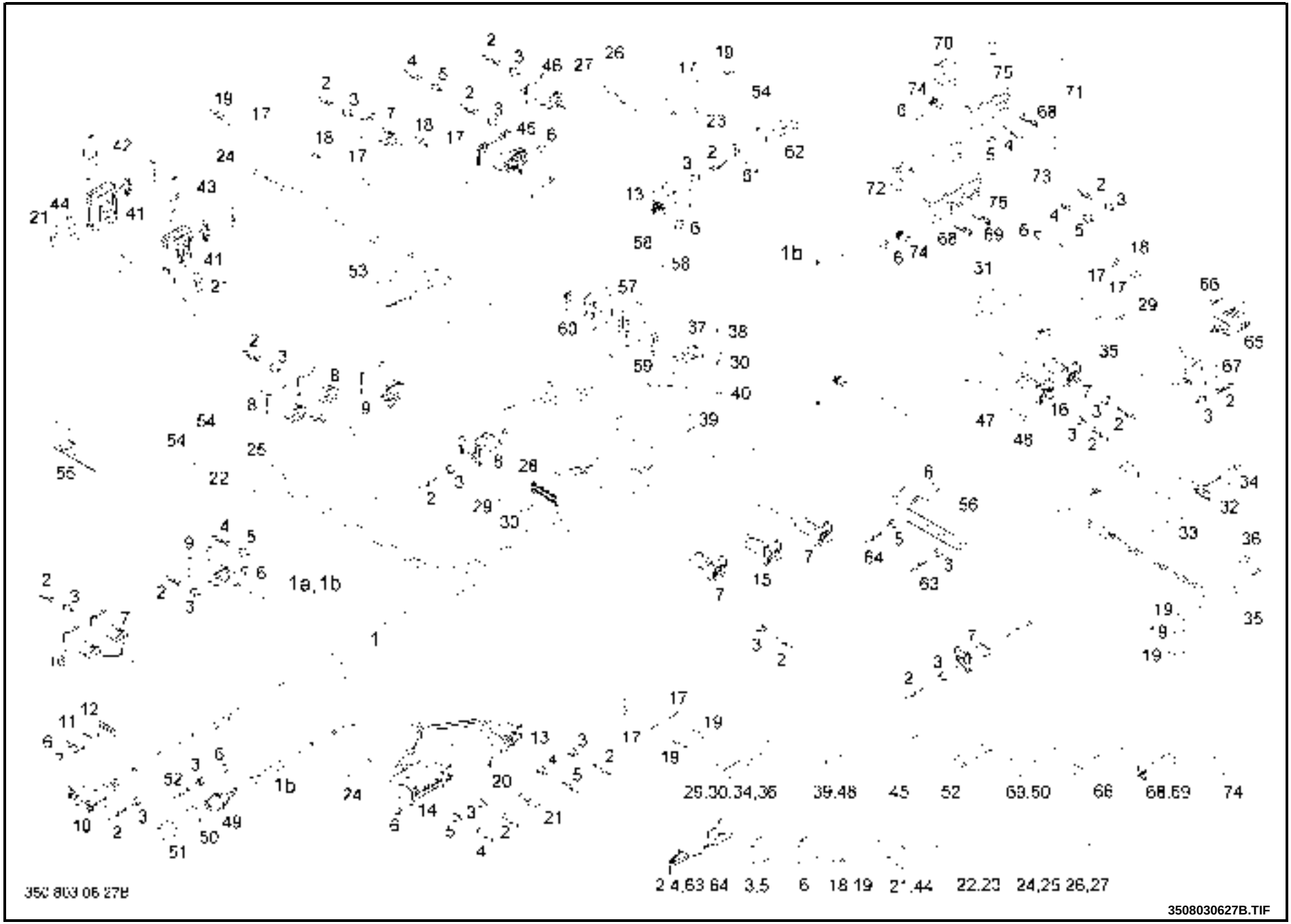

06

https://truckmanualshub.com/

MAIN CABLE LOOM LPG VERSION CATALYZER GOVERNED

Pos.	Part-No.	I	Designation	Qantity	replaced by	Remarks
1	350 381 05 54		harness	1		=>| 07/2000
1a	350 381 05 58		main harness	1		08/2000 |=> =>|09/2004
1b	350 381 05 61		main harness	1		10/2004 |=>
2	002 978 05 11		contact JPT-0,5-1	a.req.		
3	7 9149 99 019		seal 0,35-1	a.req.		
4	7 9125 03 140		contact	a.req.		
5	7 9149 99 020		seal AD-1,0-2,5	a.req.		
6	7 9149 99 025		stopper	a.req.		
7	7 9125 03 146		housing 2 way	4		=>| 07/2000
7	7 9125 03 146		housing 2 way	5		08/2000 |=>
8	7 9125 03 145		housing 3P	2		
9	7 9125 03 835		housing 4 way	1		=>| 07/2000
9	7 9125 03 835		housing 4 way	2		H2X350L02566 |=>
10	7 9125 03 147		plug housing 4 way	1		
11	7 9125 03 122		tab housing 4 way	1		
12	7 9149 99 022		seal 4 way	1		
13	7 9125 03 123		plug housing 6P	2		
14	7 9125 03 173		plug housing 16P	1		
15	7 9125 03 815		housing tab	1		
16	7 9150 06 008		housing	2		
17	7 9106 00 056		insulation sleeve E6,3-4,8	7		
18	7 9125 11 115		receptacle faston DIN 46247	a.req.		
19	000 975 15 25		receptacle faston DIN 46247 6,3-2,5-MS	a.req.		
20	7 9125 15 503		housing 1 way	1		
21	7 9125 15 002		receptacle faston	a.req.		
22	7 9125 00 242		cable shoe DIN 46225	a.req.		
23	7 9125 00 248		cable shoe DIN 46225 A5-2,5	a.req.		

1 = Packaged quantities 2 = Restricted availability 3 = Parts being phased out 4 = not available individually 5 = see separate list

https://truckmanualshub.com/

MAIN CABLE LOOM LPG VERSION CATALYZER GOVERNED

Pos.	Part-No.	I	Designation	Qantity	replaced by	Remarks
24	7 9125 06 052		shoe cable DIN 46234 8-16	a.req.		
25	7 9125 00 261		cable shoe DIN 46225 A8-10	a.req.		
26	7 9125 00 257		cable shoe DIN 46225	a.req.		
27	7 9125 00 262		cable shoe DIN 46225 A10-10	a.req.		
28	000 975 17 08		socket housing 8-P	1		
29	7 9125 11 315		connecting bush DIN 46340	a.req.		
30	000 975 15 29		tab DIN 46340	a.req.		
31	7 9125 03 535		housing socket	1		
32	7 9190 95 010		housing 3-way	1		
33	7 9190 95 012		cap protective	1		
34	7 9125 11 366		faston DIN 46340	a.req.		
35	000 975 17 05		socket housing 2-P	1		
36	7 9125 11 369		receptacle faston DIN 46340 B6,3-6 Ms	a.req.		
37	7 9162 99 960		moulding	1		
38	7 9125 11 308		receptacle faston DIN 46340 B2,8-1 Ms	a.req.		
39	7 9125 12 212		tab DIN 46343	a.req.		
40	7 9125 11 325		receptable faston DIN 46340	a.req.		
41	7 9190 95 043		socket fuse	2		
42	7 9160 40 014		type fuse-link 50A-rot	1		
43	7 9160 40 010		type fuse-link 30A-grün	1		
44	7 9125 15 004		housing	1		
45	7 9150 02 530		housing plug	1		
46	7 9125 03 126		housing 3 way	1		
47	000 975 17 04		tab housing 2x6,3	1		
48	7 9125 12 242		receptable faston DIN 46343 B6,3-1-Ms	2		
49	7 9150 06 016		plug	1		
50	000 905 90 00		nut	1		

1 = Packaged quantities 2 = Restricted availability 3 = Parts being phased out 4 = not available individually 5 = see separate list

https://truckmanualshub.com/

MAIN CABLE LOOM LPG VERSION CATALYZER GOVERNED

Pos.	Part-No.	I	Designation	Qantity	replaced by	Remarks
51	000 975 50 09		cover	1		
52	7 9125 03 112		contact	a.req.		
53	000 976 45 00		distributor 8,5-8,5-10	1		
54	7 9199 99 001		protective cap	3		
55	000 950 22 35		clip fastening assy.	a.req.		
56	7 9150 06 082		socket housing	1		
57	7 9190 95 000		socket fuse	2		
58	7 9190 95 006		hood	2		
59	7 9190 95 052		contact DFK-6,3x0,8	a.req.		
60	7 9190 95 053		contact DFK-4,0-6,0	a.req.		
61	7 9149 99 023		seal 6P	1		
62	7 9125 03 149		housing 6P	1		
63	7 9125 03 133		contact	a.req.		
64	7 9125 03 134		contact	a.req.		
65	7 9125 03 532		housing socket 4 way	1		
66	7 9125 01 025		cable shoe 0,8-1,0	a.req.		
67	7 9125 03 121		plug housing 2 way	1		
68	7 9125 03 080		contact	a.req.		
69	7 9125 03 081		contact	a.req.		
70	7 9125 33 702		lid	1		
71	7 9125 03 322		lock	1		
72	7 9125 33 706		lid	1		
73	7 9125 03 320		lock	1		
74	7 9149 96 000		plug	a.req.		
75	----------	4	housing	1		
76	----------	4	housing	1		

1 = Packaged quantities 2 = Restricted availability 3 = Parts being phased out 4 = not available individually 5 = see separate list

https://truckmanualshub.com/

SET CABLE

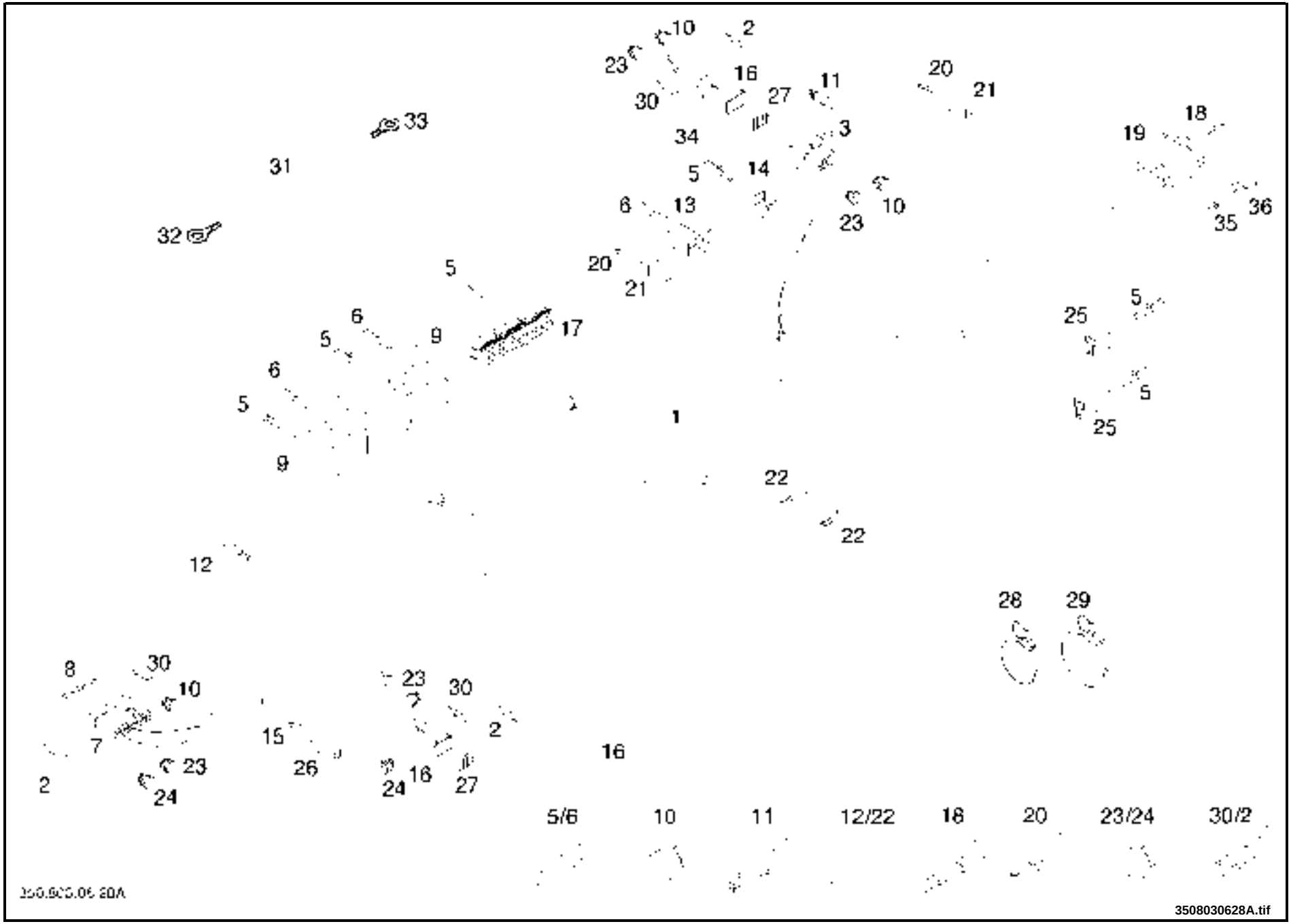

06

https://truckmanualshub.com/

SET CABLE

Pos.	Part-No.	I	Designation	Qantity	replaced by	Remarks
1	350 381 05 34	3	cable set	1	350 381 10 00	=>|C1X350M00042 C1X350N00226|=> =>|C1X350P00117
1	350 381 10 00		cable set	1		C1X350M00043|=> =>|C1X350N00225 C1X350P00118|=> (C1X350P00115)
2	7 9125 03 752		contact 1.0-2.5	a.req.		
3	7 9125 03 123		plug housing 6P	1		
4	7 9125 04 058		cable end DIN 46228	a.req.		
5	7 9125 11 315		connecting bush DIN 46340	a.req.		
6	7 9125 11 325		receptable faston DIN 46340	a.req.		
7	7 9125 03 119		plug housing 16P	1		
8	7 9149 99 012		seal 16P	1		
9	7 9162 99 960		moulding	2		
10	7 9149 99 025		stopper	a.req.		
11	002 978 05 11		contact JPT-0,5-1	a.req.		
12	7 9125 00 250		cable shoe DIN 46225	1		
13	000 975 17 85		housing	1		
14	000 975 17 86		housing	1		
15	7 9125 15 007		contact tab 2,5-6,0	a.req.		
16	7 9125 03 149		housing 6P	1		
17	7 9190 20 927		plug	1		
18	7 9125 03 180		contact pin	a.req.		
19	7 9125 03 887		housing tab	1		
20	7 9125 12 242		receptable faston DIN 46343 B6,3-1-Ms	a.req.		
21	000 975 15 33		housing 1X6.3	2		
22	7 9125 00 249		connector DIN 46225	2		
23	7 9149 99 019		seal 0,35-1	a.req.		
24	7 9149 99 020		seal AD-1,0-2,5	a.req.		

1 = Packaged quantities 2 = Restricted availability 3 = Parts being phased out 4 = not available individually 5 = see separate list

https://truckmanualshub.com/

SET CABLE

Pos.	Part-No.	I	Designation	Qantity	replaced by	Remarks
25	000 975 17 65		socket housing 2-polig	2		
26	7 9125 15 504		housing tab 1 way	1		
27	7 9149 99 023		seal 6P	1		
28	000 955 26 04		clip fastening assy.	a.req.		
29	000 955 05 04		clip fastening assy.	a.req.		
29	000 950 22 33		clip fastening assy.	1		
30	7 9125 03 753		tab 0,5-1,0	a.req.		
31	000 977 64 27		cable assembly WN22430	1		
32	7 9125 00 257		cable shoe DIN 46225	a.req.		
33	7 9125 00 258		cable shoe DIN 46225 A12X6	a.req.		
34	350 381 03 57		harness	1		= pos. 10,16,27,30 double pedal, coding plug
35	7 9125 11 115		receptacle faston DIN 46247	a.req.		
36	7 9106 00 056		insulation sleeve E6,3-4,8	a.req.		

1 = Packaged quantities 2 = Restricted availability 3 = Parts being phased out 4 = not available individually 5 = see separate list

https://truckmanualshub.com/

https://truckmanualshub.com/

SET CABLE - LFM

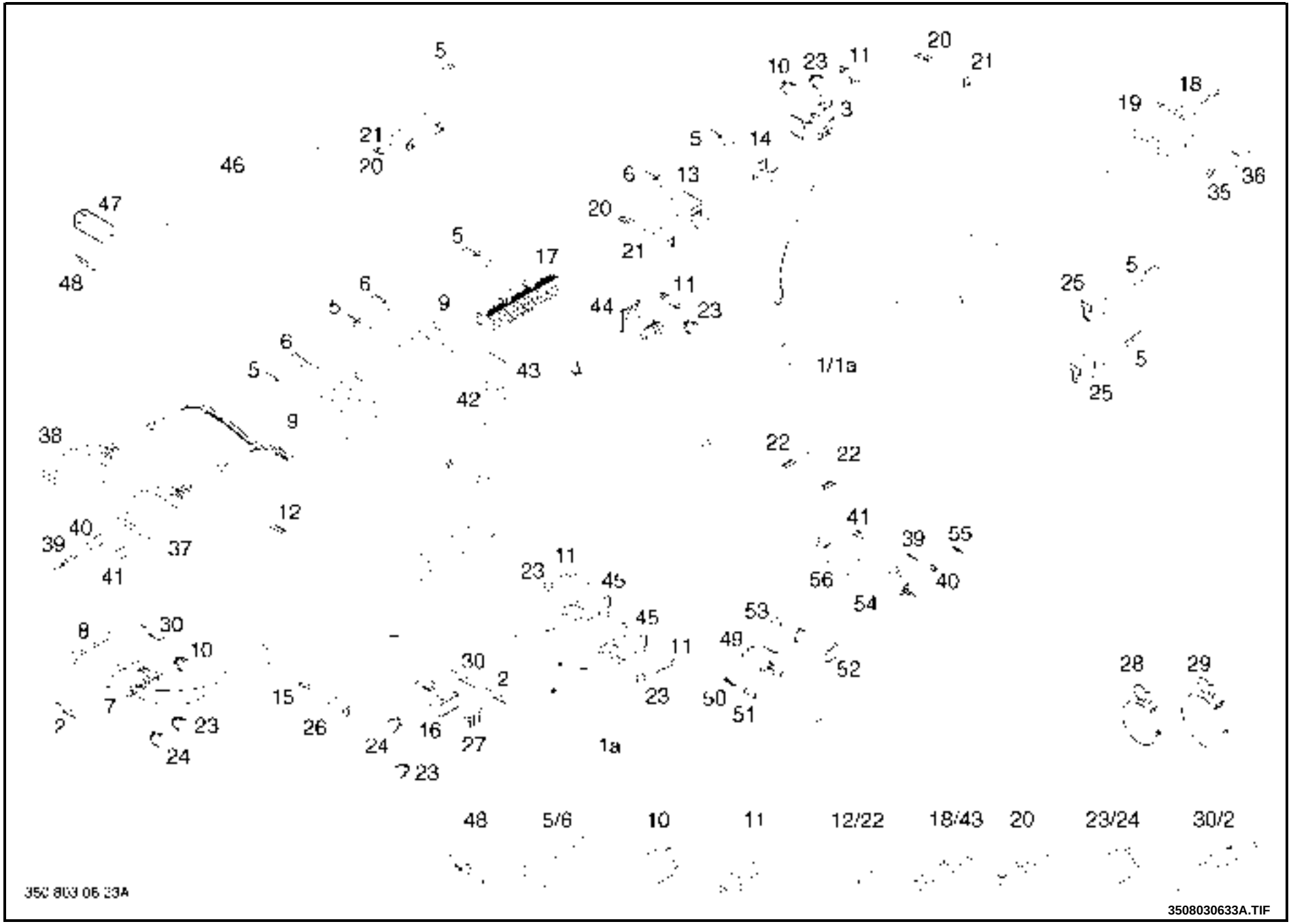

06

https://truckmanualshub.com/

SET CABLE - LFM

Pos.	Part-No.	I	Designation	Qantity	replaced by	Remarks
1	350 381 10 01	3	set cable	1	350 381 10 02	
1a	350 381 10 02		set cable	1		
2	7 9125 03 752		contact 1.0-2.5	a.req.		
3	7 9125 03 123		plug housing 6P	1		
4	7 9125 04 058		cable end DIN 46228	a.req.		
5	7 9125 11 315		connecting bush DIN 46340	a.req.		
6	7 9125 11 325		receptable faston DIN 46340	a.req.		
7	7 9125 03 119		plug housing 16P	1		
8	7 9149 99 012		seal 16P	1		
9	7 9162 99 960		moulding	2		
10	7 9149 99 025		stopper	a.req.		
11	002 978 05 11		contact JPT-0,5-1	a.req.		
12	7 9125 00 250		cable shoe DIN 46225	1		
13	000 975 17 85		housing	1		
14	000 975 17 86		housing	1		
15	7 9125 15 007		contact tab 2,5-6,0	a.req.		
16	7 9125 03 149		housing 6P	1		
17	7 9190 20 927		plug	1		
18	7 9125 03 180		contact pin	a.req.		
19	7 9125 03 887		housing tab	1		
20	7 9125 12 242		receptable faston DIN 46343 B6,3-1-Ms	a.req.		
21	000 975 15 33		housing 1X6.3	2		
22	7 9125 00 249		connector DIN 46225	2		
23	7 9149 99 019		seal 0,35-1	a.req.		
24	7 9149 99 020		seal AD-1,0-2,5	a.req.		
25	000 975 17 65		socket housing 2-polig	2		
26	7 9125 15 504		housing tab 1 way	1		

1 = Packaged quantities 2 = Restricted availability 3 = Parts being phased out 4 = not available individually 5 = see separate list

https://truckmanualshub.com/

SET CABLE - LFM

Pos.	Part-No.	I	Designation	Qantity	replaced by	Remarks
27	7 9149 99 023		seal 6P	1		
28	000 955 26 04		clip fastening assy.	a.req.		
29	000 955 05 04		clip fastening assy.	a.req.		
29	000 950 22 33		clip fastening assy.	1		
30	7 9125 03 753		tab 0,5-1,0	a.req.		
31	000 977 64 27		cable assembly WN22430	1		
32	7 9125 00 257		cable shoe DIN 46225	a.req.		
33	7 9125 00 258		cable shoe DIN 46225 A12X6	a.req.		
35	7 9125 11 115		receptacle faston DIN 46247	a.req.		
36	7 9106 00 056		insulation sleeve E6,3-4,8	a.req.		
37	000 975 18 05		housing	1		
38	000 975 18 13		housing	1		
39	7 9125 03 072		contact 0,5-1,0	a.req.		
40	7 9149 99 017		seal 0,35-1,0	a.req.		
41	7 9149 99 024		plug	a.req.		
42	7 9125 03 816		mounting housed 1 way	1		
43	7 9125 03 151		bush	a.req.		
44	7 9125 03 145		housing 3P	1		
45	7 9125 03 835		housing 4 way	2		
46	350 381 03 89		harness	1		particle filter for LFM
47	000 975 17 38		housing plug	1		
48	7 9125 03 101		pin contact 2.1X20.1	a.req.		
49	7 9125 33 011		contact	1		
50	7 9125 33 210		contact	a.req.		
51	7 9125 33 330		seal	a.req.		
52	7 9125 33 410		contact	1		
53	7 9149 96 001		stopper	a.req.		

1 = Packaged quantities 2 = Restricted availability 3 = Parts being phased out 4 = not available individually 5 = see separate list

https://truckmanualshub.com/

SET CABLE - LFM

Pos.	Part-No.	I	Designation	Qantity	replaced by	Remarks
54	000 975 18 04		housing	1		
55	7 9125 03 071		contact	a.req.		
56	7 9125 03 452		housing tab	1		
	000 955 26 04		clip fastening assy.	1		

1 = Packaged quantities 2 = Restricted availability 3 = Parts being phased out 4 = not available individually 5 = see separate list

https://truckmanualshub.com/

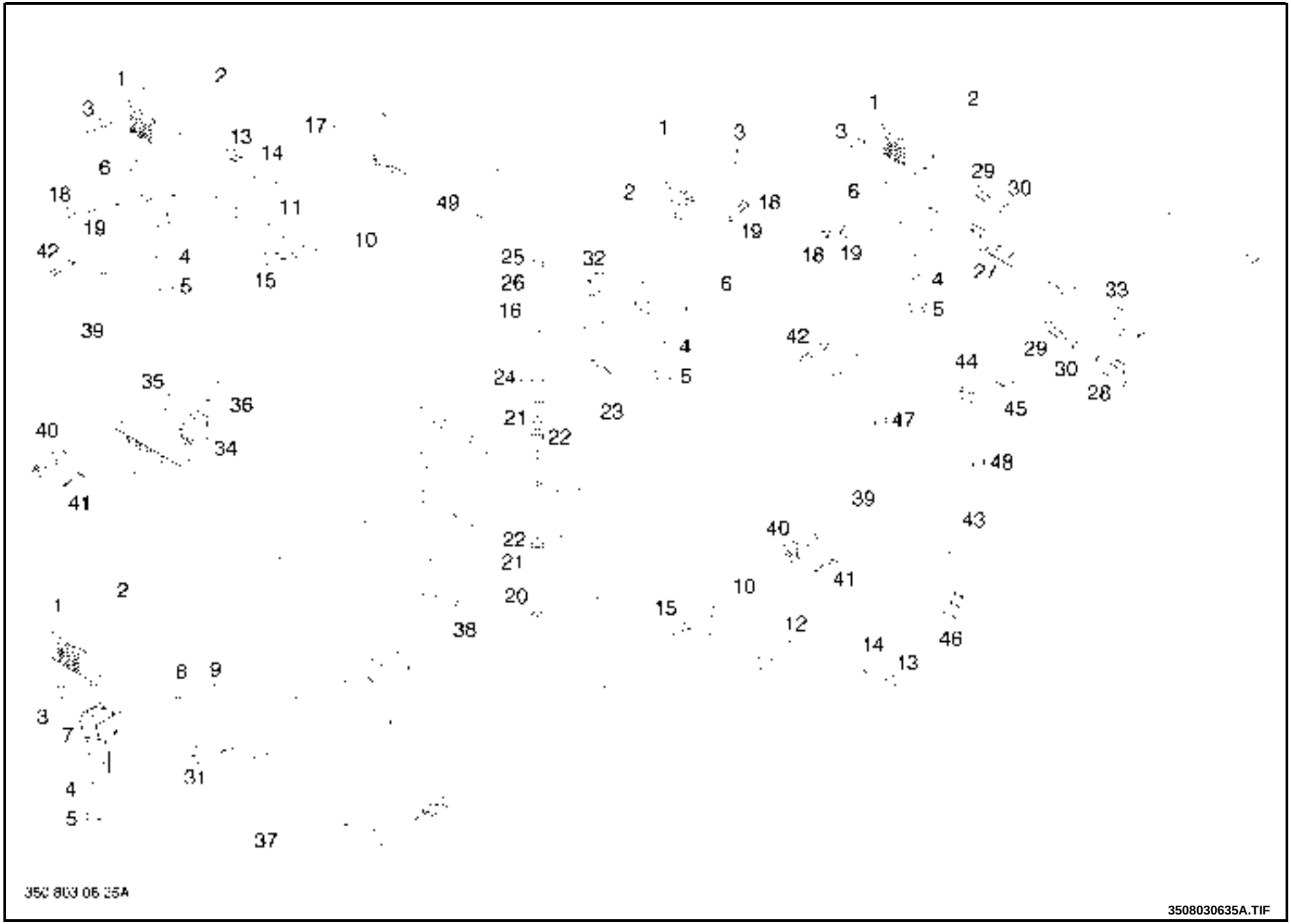

https://truckmanualshub.com/

SPOT LIGHT 11/2004 |=>

Pos.	Part-No.	I	Designation	Qantity	replaced by	Remarks
1	000 974 04 23		working lamp	1-5		= pos. 1,2,4,5
2	000 964 03 37	3	cable bushing	1-5	7 9149 90 749	for pos. 1
2	7 9149 90 749		cable grommet	1-5		for pos. 1
3	7 9195 64 945		bulb DIN 72601 YC-12V55W	1-5		
4	9 323 620 020	1	spring washer'DIN 137-B10-A2C DIN 137	1-5		
5	9 210 281 130	1	nut hexagon ISO 4032 DIN 934-M10-8A2C	1-5		
6	353 363 14 81	1	support	1-3		
7	350 360 60 10		support assy.	1-2		
8	9 330 620 018	1	washer lock serrated DIN 6798 6798-A8,4-PHR	1-2		
9	9 214 317 110		hexagon nut ISO 7042 M8-8-A2C	1-2		
10	350 363 01 05		bracket	1-2		
11	350 360 60 20		support assy.	1		
12	350 360 60 19		support assy.	1		
13	9 008 311 175	1	hexagon head screw ISO 4017 M8x12-8.8-A2C	2		
14	9 292 003 018	1	washer DIN 125 DIN 125-A8,4x16x1,6-A2C	2		
15	9 045 311 180	1	socket-head screw ISO 4762 M8x20-8.8-A2C	2		
16	350 360 60 24		support assy.	1		
17	350 360 60 25		support assy.	1		annex preliminary filter
18	9 008 311 128		hexagon head screw ISO 4017 M6x16-8.8-A2C	3		
19	9 292 003 014	1	washer ISO 7089 A6,4-ST50-A2C	a.req.		
20	9 007 311 316	1	hexagon head bolt ISO 4014 M12x100-8.8-A2C	1		
21	9 311 003 022	1	washer DIN 6340 DIN 6340-13	2		
22	000 964 03 35		grommet cable 20/12X4	2		
23	9 208 281 140	1	hexagon nut ISO 4035 DIN 439-BM12-6A2C	1		
24	9 311 600 046	1	washer DIN 6340 DIN 6340-31xA2C	1		
25	9 210 281 140	1	hexagon nut ISO 4032 DIN 934-M12-8A2C	1		
26	9 291 003 022	1	washer DIN 125 B12-HV200-A2C	1		

1 = Packaged quantities 2 = Restricted availability 3 = Parts being phased out 4 = not available individually 5 = see separate list

https://truckmanualshub.com/

SPOT LIGHT 11/2004 |=>

Pos.	Part-No.	I	Designation	Qantity	replaced by	Remarks
27	350 360 60 22		support assy.	1		
28	350 360 60 21		support assy.	1		
29	9 008 311 180	1	hexagon head screw ISO 4017 M8x20-8.8-A2C	2		
30	9 309 412 018	1	washer DIN 7349 DIN 7349-8.4x21x4,8A2C	a.req.		
31	9 308 003 020	1	washer DIN9021 DIN 9021-B10.5x30x2.5	2		
32	000 955 30 68		cable tie 4.6x205	1		
33	7 9149 90 765		grommet cable 11/6x1,5	1		
34	7 9154 90 527		toggle switch E/A/W-	2		
35	7 9195 64 937		bulb DIN 72601 W5/1,2-12V 1,2W	1		
36	000 938 35 02		symbol insert W/LIGHT '14X14	1		
37	000 962 65 05		plug WN 17253	a.req.		
38	000 964 03 17		cable grommet 11/8x3	a.req.		
39	350 381 03 91		harness	1		
40	7 9125 03 893		housing socket 2 way	1		
41	7 9125 11 365		receptable faston DIN 46340 B6.3-1MS-46340	a.req.		
42	7 9125 03 151		bush	2		
43	000 891 60 01		cable electric	1		version for working lamp Pos. 7 by reverse
44	7 9125 11 115		receptacle faston DIN 46247	2		
45	7 9106 00 056		insulation sleeve E6,3-4,8	2		
46	7 9125 03 101		pin contact 2.1X20.1	2		
47	7 9149 90 765		grommet cable 11/6x1,5	1		
48	000 964 03 37	3	cable bushing	1	7 9149 90 749	
48	7 9149 90 749		cable grommet	1		
48	000 964 03 17		cable grommet 11/8x3	1		
49	350 363 25 08		plate	1		version for lighting height up

1 = Packaged quantities 2 = Restricted availability 3 = Parts being phased out 4 = not available individually 5 = see separate list

https://truckmanualshub.com/

https://truckmanualshub.com/

TRUCK LIGHTING, WARNING BLINKER SYSTEM AND DANGER SIGNAL

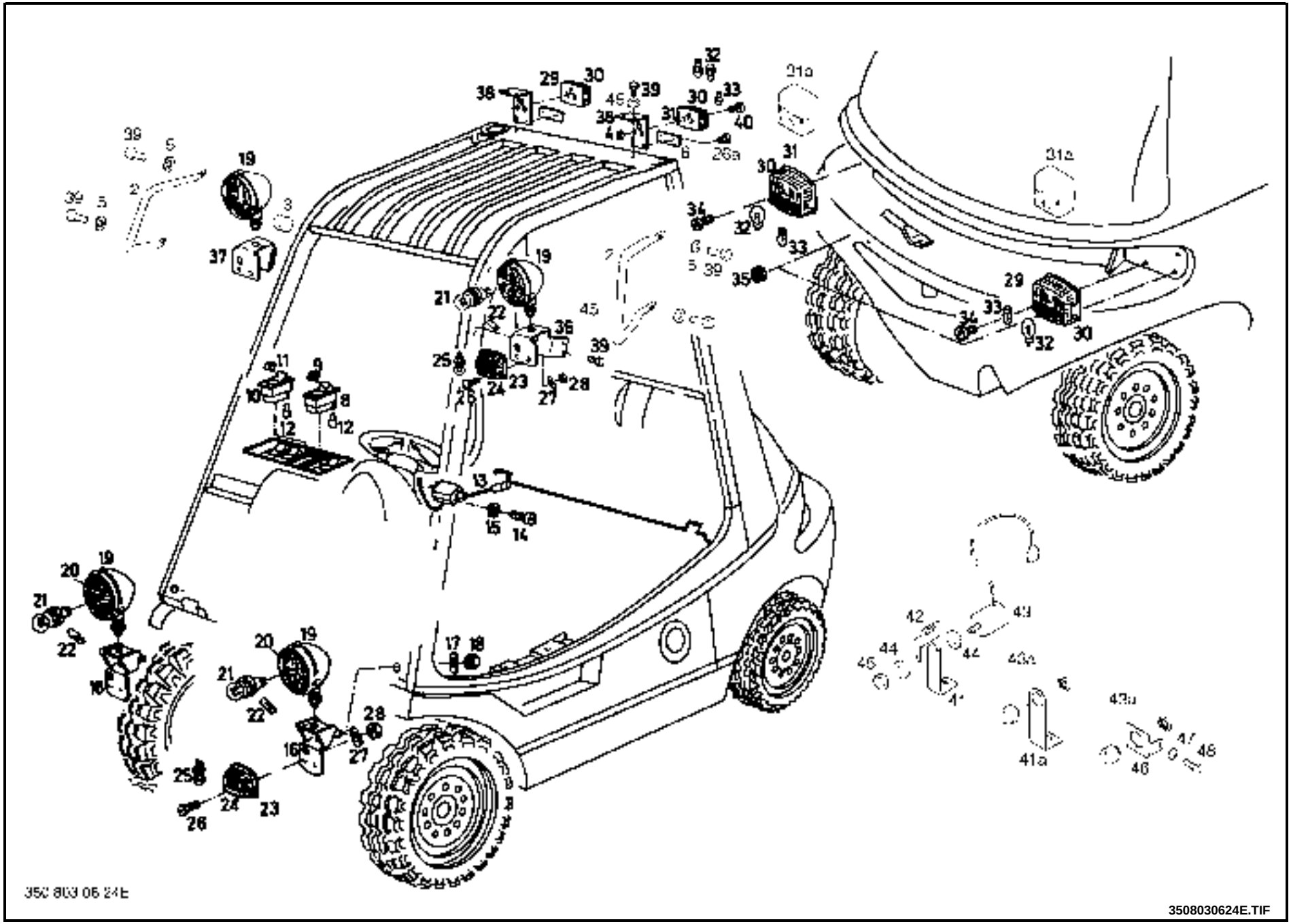

06

https://truckmanualshub.com/

TRUCK LIGHTING, WARNING BLINKER SYSTEM AND DANGER SIGNAL

Pos.	Part-No.	I	Designation	Qantity	replaced by	Remarks
1	351 436 29 06		guard hoop	1		
2	351 436 29 05		guard hoop	1		
3	7 9149 90 636		grommet cable 15/10X3-rubber	2	000 964 03 35	
3	000 964 03 35		grommet cable 20/12X4	4		
4	9 210 281 070	1	hexagon nut ISO 4032 M5-8-A2C	4		
5	9 309 412 014	1	washer DIN 7349 DIN 7349-6,4x17x3A2C	12		
6	000 994 01 13		reflector rear 94x44/red	2		
8	7 9154 90 528		switch,toggle	1		
9	000 938 35 00		symbol insert	1		
10	000 973 26 14		toggle switch	1		
11	000 938 35 01		symbol insert	1		
12	7 9195 64 937	1	bulb DIN 72601 W5/1,2-12V 1,2W	2		
13	000 973 24 00		blinker switch	1		
14	9 041 201 065	1	socket-head screw ISO 1207 AM4x10-4.8-A2C	2		
15	9 292 003 010	1	washer DIN 125 A4.3x9x0.8-125-A2C	2		
16	350 360 60 10		support assy.	2		
17	9 330 620 018	1	washer lock serrated DIN 6798 6798-A8,4-PHR	2		
18	9 214 317 110		hexagon nut ISO 7042 M8-8-A2C	2		
19	000 974 04 25		frame headlight	2		Pos. 19+20
20	000 974 82 10		lens	2		
21	7 9195 64 902		bulb DIN 72601 12V 45/40W	2		
22	7 9195 00 953		bulb DIN 72601 12V-4W	2		
23	000 974 10 28		flasher light	2		
24	000 974 60 38		light glass	2		
25	7 9195 64 920		bulb DIN 72601 12V 21W	2		
26	9 087 101 068	1	screw ISO 7045 7985-M4x16-4.8A2C	4		
26a	9 041 201 065	1	socket-head screw ISO 1207 AM4x10-4.8-A2C	4		

1 = Packaged quantities 2 = Restricted availability 3 = Parts being phased out 4 = not available individually 5 = see separate list

https://truckmanualshub.com/

TRUCK LIGHTING, WARNING BLINKER SYSTEM AND DANGER SIGNAL

Pos.	Part-No.	I	Designation	Qantity	replaced by	Remarks
27	9 330 620 010	1	washer lock serrated DIN 6798 6798-A4,3-PHR	4		
28	9 210 281 060	1	hexagon nut ISO 4032 DIN 934-M4-8A2C	4		
29	000 974 02 14		rear blinker light right	1		=>| H2X350L02020 by version lighting = pos. 29+30 =>| H2X350L02860 for lighting height up = pos. 29+30
30	000 974 60 36		lamp glass	2		=>| H2X350L02020 by version lighting =>| H2X350L02860 for lighting height up
31	000 974 02 15		rear blinker light left	1		=>| H2X350L02020 by version lighting = pos. 30+31 =>| H2X350L02860 for lighting height up = pos. 30+31
31a	000 974 02 21		rear light	2		H2X350L02021 |=> by version lighting H2X350L02861 |=> for lighting height up
32	7 9195 64 920		bulb DIN 72601 12V 21W	2		
33	7 9195 64 921		bulb DIN 72601 12V 10W	2		=>| H2X350L02020 by version lighting =>| H2X350L02860 for lighting height up
33	7 9195 64 991		bulb DIN 72601 GL-P21W-12V5W-WN72601	2		H2X350L02021 |=> by version lighting H2X350L02861 |=> for lighting height up
34	9 048 341 095	1	socket-head screw M5x10-10.9	4		=>| H2X350L02020 by version lighting

1 = Packaged quantities 2 = Restricted availability 3 = Parts being phased out 4 = not available individually 5 = see separate list

https://truckmanualshub.com/

TRUCK LIGHTING, WARNING BLINKER SYSTEM AND DANGER SIGNAL

Pos.	Part-No.	I	Designation	Qantity	replaced by	Remarks
						=>| H2X350L02860 for lighting height up
34	9 041 201 098	1	socket-head screw ISO 1207 DIN 84-AM5X16-4.8A2C	4		H2X350L02021 |=> by version lighting H2X350L02861 |=> for lighting height up
35	000 994 01 14		reflector rear D=60/red/adhes.	2		
36	351 363 14 37		support left	1		
37	351 363 14 38		support right	1		
38	351 363 42 01		angle	2		=>| H2X350L02860
38	350 363 42 16		angle	2		H2X350L02861 |=>
39	9 111 604 497		screw s/t hex hd ISO 1479 F6.3X19-A2C	12		
40	9 041 201 098		socket-head screw ISO 1207 DIN 84-AM5X16-4.8A2C	4		
	000 964 55 17		string adhesive 8x20	3		
	000 955 01 58		clip cable	2		
	000 962 02 48		pipe plug WN 17253 C3,5x6	6		
41	350 436 35 02		support	1		=>| H2X350R00104
41a	350 436 15 21		angle	1		H2X350R00105 |=>
42	000 973 50 11		support	1		=>| H2X350R00104
43	7 9189 15 240	3	sounder=12-24v	1	7 9189 15 225	including: 2x 7.9125.11.115 2x 7.9106.00.056 1x 350.436.15.21
	000 975 17 18		housed mounting 3P	1		to pos. 43
	7 9125 03 151		bush	a.req.		to pos. 43
43a	7 9189 15 225		buzzer	1		
44	9 292 003 018	1	washer DIN 125 DIN 125-A8,4x16x1,6-A2C	2		
45	9 210 281 110	1	nut ISO 4032 934-M8-8A2C	1		

06

1 = Packaged quantities 2 = Restricted availability 3 = Parts being phased out 4 = not available individually 5 = see separate list

https://truckmanualshub.com/

Pos.	Part-No.	I	Designation	Qantity	replaced by	Remarks
46	352 430 26 13		angle assy.	1		version LPG tank Australa , Great Britain (U
47	9 309 412 018	1	washer DIN 7349 DIN 7349-8.4x21x4,8A2C	1		
48	9 008 311 180	1	hexagon head screw ISO 4017 M8x20-8.8-A2C	1		

1 = Packaged quantities 2 = Restricted availability 3 = Parts being phased out 4 = not available individually 5 = see separate list

https://truckmanualshub.com/

https://truckmanualshub.com/

FLASH LIGHT AND WARNING LIGHTS

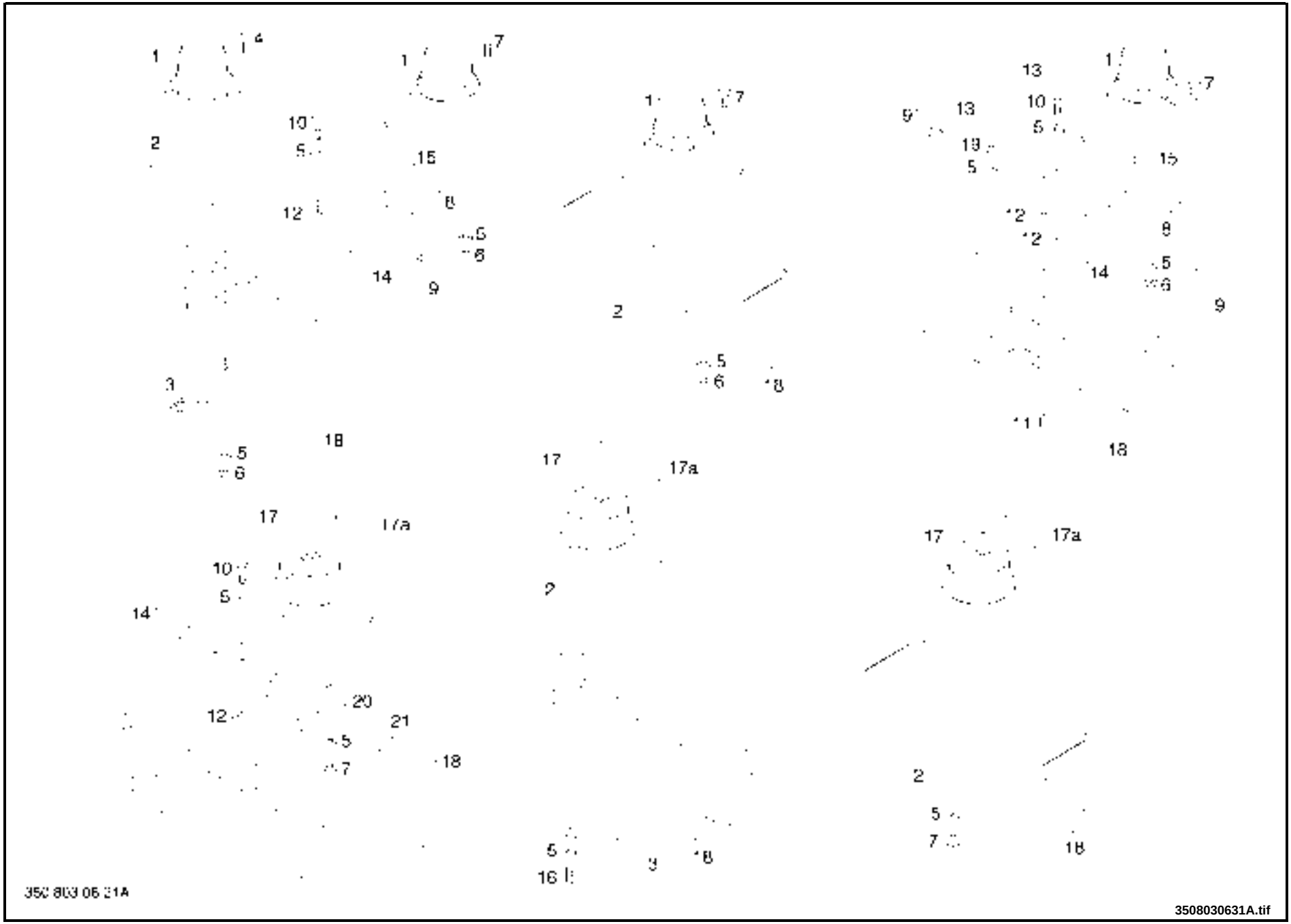

06

https://truckmanualshub.com/

FLASH LIGHT AND WARNING LIGHTS

Pos.	Part-No.	I	Designation	Qantity	replaced by	Remarks
1	000 974 18 00	3	light warning flashing	1	000 974 18 01	
	7 9125 03 850		plug disconnect	1		
	7 9125 03 101		pin contact 2.1X20.1	a.req.		
1	000 974 18 01		light warning flashing	1		
2	351 363 25 03		plate	1		
3	351 363 01 07		bracket	1		
4	9 008 311 137	1	hexagon head screw ISO 4017 M6x30-8.8-A2C	3		
5	9 292 003 014	1	washer ISO 7089 A6,4-ST50-A2C	3/7		
6	9 214 317 090	1	nut hexagon ISO 7042 M6-8-A2C	3/5		
7	9 008 311 132	1	hexagon head screw ISO 4017 M6x20-8.8-A2C	3		
	350 360 60 18		support assy.	1		= pos. 8-9
8	350 363 14 32		support	1		
9	000 964 13 56		edge protection 13,5x120An	2		
10	9 008 610 132	1	hexagon head screw DIN 7500 DEM6x20-ST-A3B	2/4		
11	9 062 316 132	1	countersunk screw ISO 10642 7991-M6x20-8.8A2C	2		
12	000 964 21 54		washer	4		
13	000 964 37 32		cap protective SW10	4		
14	000 955 30 68		cable tie 4.6x205	a.req.		
15	7 9149 90 928		grommet cable 10/6X4-PVC	1		
16	9 008 311 135	1	hexagon head screw ISO 4017 M6x25-8.8-A2C	3		
17	7 9190 52 815	3	rotating beacon 12V	1	7 9190 52 829	
17	7 9190 52 829		warning light 10,8-14,4V	1		
17a	7 9195 18 905		lamp DIN 72601 YC12V55W	1		
	7 9125 03 850		plug disconnect	1		
	7 9125 03 101		pin contact 2.1X20.1	a.req.		
18	000 964 03 17		cable grommet 11/8x3	a.req.		
19	9 210 281 090	1	hexagon nut ISO 4032 DIN 934-M6-8A2C	2		

1 = Packaged quantities 2 = Restricted availability 3 = Parts being phased out 4 = not available individually 5 = see separate list

https://truckmanualshub.com/

FLASH LIGHT AND WARNING LIGHTS

Pos.	Part-No.	I	Designation	Qantity	replaced by	Remarks
20	350 363 14 39		support	1		
21	7 9149 90 928		grommet cable 10/6X4-PVC	1		
	7 3780 00 021		adhesive string (mtr)(1 roll = 6m) 8	a.req.		

06

1 = Packaged quantities 2 = Restricted availability 3 = Parts being phased out 4 = not available individually 5 = see separate list

https://truckmanualshub.com/

https://truckmanualshub.com/

VEHICLE LIGHTING VERSION JAPAN

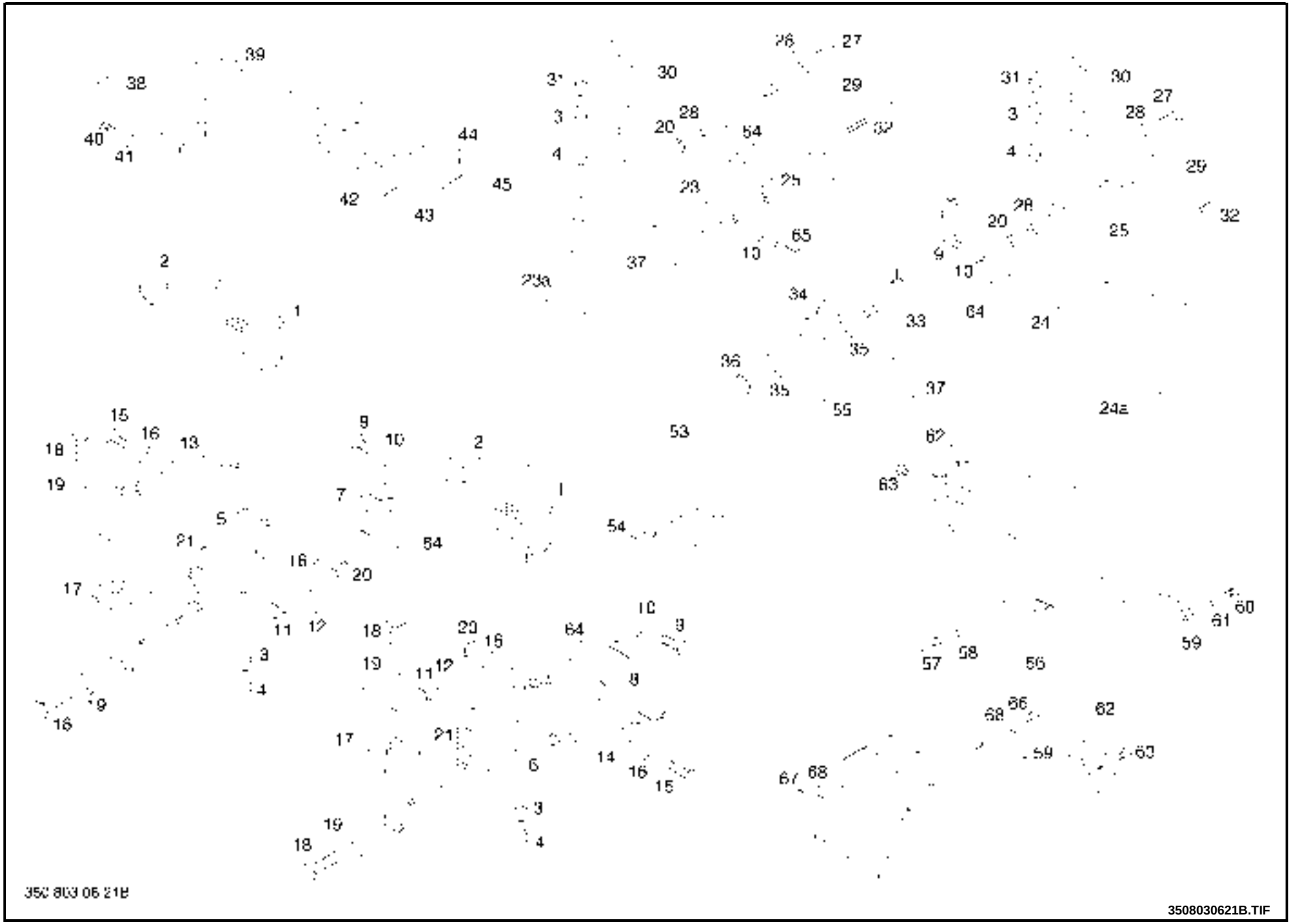

06

https://truckmanualshub.com/

VEHICLE LIGHTING VERSION JAPAN

Pos.	Part-No.	I	Designation	Qantity	replaced by	Remarks
1	000 974 04 32		headlight	2		
	-		lamp lense	2		for pos. 1
2	7 9195 64 945		bulb DIN 72601 YC-12V55W	2		
3	-		bulb 12V27W	4		
4	-		bulb 12V10W	4		
5	335 360 60 30		support assy.	1		
6	335 360 60 29		support assy.	1		
7	351 360 60 24		support assy.	1		
8	351 360 60 23		support assy.	1		
9	9 110 604 493		screw s/tapping ISO 1479 C6.3X13-A2C	4		
10	9 309 412 014		washer DIN 7349 DIN 7349-6,4x17x3A2C	8		
11	9 008 311 180	1	hexagon head screw ISO 4017 M8x20-8.8-A2C	4		
12	9 309 412 018	1	washer DIN 7349 DIN 7349-8.4x21x4,8A2C	4		
13	351 363 42 22		angle right	1		
14	351 363 42 23		angle left	1		
15	9 008 311 128	1	hexagon head screw ISO 4017 M6x16-8.8-A2C	4		
16	9 292 003 014	1	washer ISO 7089 A6,4-ST50-A2C	8		
17	351 430 75 02		bracket guard assy.	2		
18	9 008 311 180	1	hexagon head screw ISO 4017 M8x20-8.8-A2C	6		
19	9 309 412 018	1	washer DIN 7349 DIN 7349-8.4x21x4,8A2C	6		
20	9 210 281 090	1	hexagon nut ISO 4032 DIN 934-M6-8A2C	8		=>| 03/2005
20	9 210 281 090	1	hexagon nut ISO 4032 DIN 934-M6-8A2C	4		04/2005 |=>
21	000 974 10 02		indicator light	2		= pos. 21+22
	-		lamp lense	2		
23	350 360 60 15	3	support assy.	1	350 363 14 57	
23a	350 363 14 57		support	1		
24	350 360 60 14	3	support assy.	1	350 363 14 58	

1 = Packaged quantities 2 = Restricted availability 3 = Parts being phased out 4 = not available individually 5 = see separate list

https://truckmanualshub.com/

VEHICLE LIGHTING VERSION JAPAN

Pos.	Part-No.	I	Designation	Qantity	replaced by	Remarks
24a	350 363 14 58		support	1		
25	335 606 09 03		bracket	2		=>| 03/2005
27	9 008 311 128		hexagon head screw ISO 4017 M6x16-8.8-A2C	4		=>| 03/2005
28	9 292 003 014	1	washer ISO 7089 A6,4-ST50-A2C	a.req.		
29	000 974 02 22		indicator light REAR	2		
30	-		lamp lense cpt.	2		
	-		lamp lense	2		top for pos.30
	-		lamp lense	2		centre for pos.30
	-		lamp lense	2		bottom for pos.30
31	-		bulb 12V23/8W	2		
32	-		screw raised head M5x55	8		
33	7 9189 15 240		sounder=12-24v	1		
	000 975 17 18		housed mounting 3P	1		to pos. 33
	7 9125 03 151		bush	2		to pos. 33
34	000 973 50 11		support	1		
35	9 292 003 018	1	washer DIN 125 DIN 125-A8,4x16x1,6-A2C	2		
36	9 210 281 110	1	nut ISO 4032 934-M8-8A2C	1		
37	000 994 01 14		reflector rear D=60/red/adhes.	2		
38	000 973 24 00		blinker switch	1		
39	000 962 55 53		bellows	1		
40	9 041 201 065	1	socket-head screw ISO 1207 AM4x10-4.8-A2C	2		
41	9 292 003 010	1	washer DIN 125 A4.3x9x0.8-125-A2C	2		
42	7 9154 90 528		switch,toggle	1		
43	000 938 35 00		symbol insert	1		
44	000 973 26 14		toggle switch	1		

1 = Packaged quantities 2 = Restricted availability 3 = Parts being phased out 4 = not available individually 5 = see separate list

https://truckmanualshub.com/

VEHICLE LIGHTING VERSION JAPAN

Pos.	Part-No.	I	Designation	Qantity	replaced by	Remarks
45	000 938 35 01		symbol insert	1		
53	000 973 25 02		blinker relay	1		
54	9 008 610 096	1	hexagon head screw DIN 7500 DEM5x12-ST-A3B	1		
55	350 436 35 02		support	1		
56	350 360 60 02		support assy.	1		=>| 02/2003
57	9 045 311 180	1	socket-head screw ISO 4762 M8x20-8.8-A2C	1		=>| 02/2003
58	9 308 003 018	1	washer ISO 7093-1 8-200HV-A2C	1		=>| 02/2003
59	350 527 06 03		support	1		
60	9 008 610 069	1	hexagon head screw DIN 7500 DEM4x16-ST-A3B	1		=>| 02/2003
61	9 309 412 010	1	washer DIN 7349 4,3x12x1,6 A2C	1		=>| 02/2003
62	7 9162 99 084		relay	2		
63	9 008 610 096		hexagon head screw DIN 7500 DEM5x12-ST-A3B	2		
64	7 9149 90 981		grommet	4		
65	9 111 604 497		screw s/t hex hd ISO 1479 F6.3X19-A2C	3		
65	9 008 311 128		hexagon head screw ISO 4017 M6x16-8.8-A2C	1		
66	9 008 311 132	1	hexagon head screw ISO 4017 M6x20-8.8-A2C	1		03/2003 |=>
67	9 210 281 090	1	hexagon nut ISO 4032 DIN 934-M6-8A2C	1		03/2003 |=>
68	9 292 003 014	1	washer ISO 7089 A6,4-ST50-A2C	2		03/2003 |=>

1 = Packaged quantities 2 = Restricted availability 3 = Parts being phased out 4 = not available individually 5 = see separate list

https://truckmanualshub.com/

CABLE TREES FOR LIGHTING

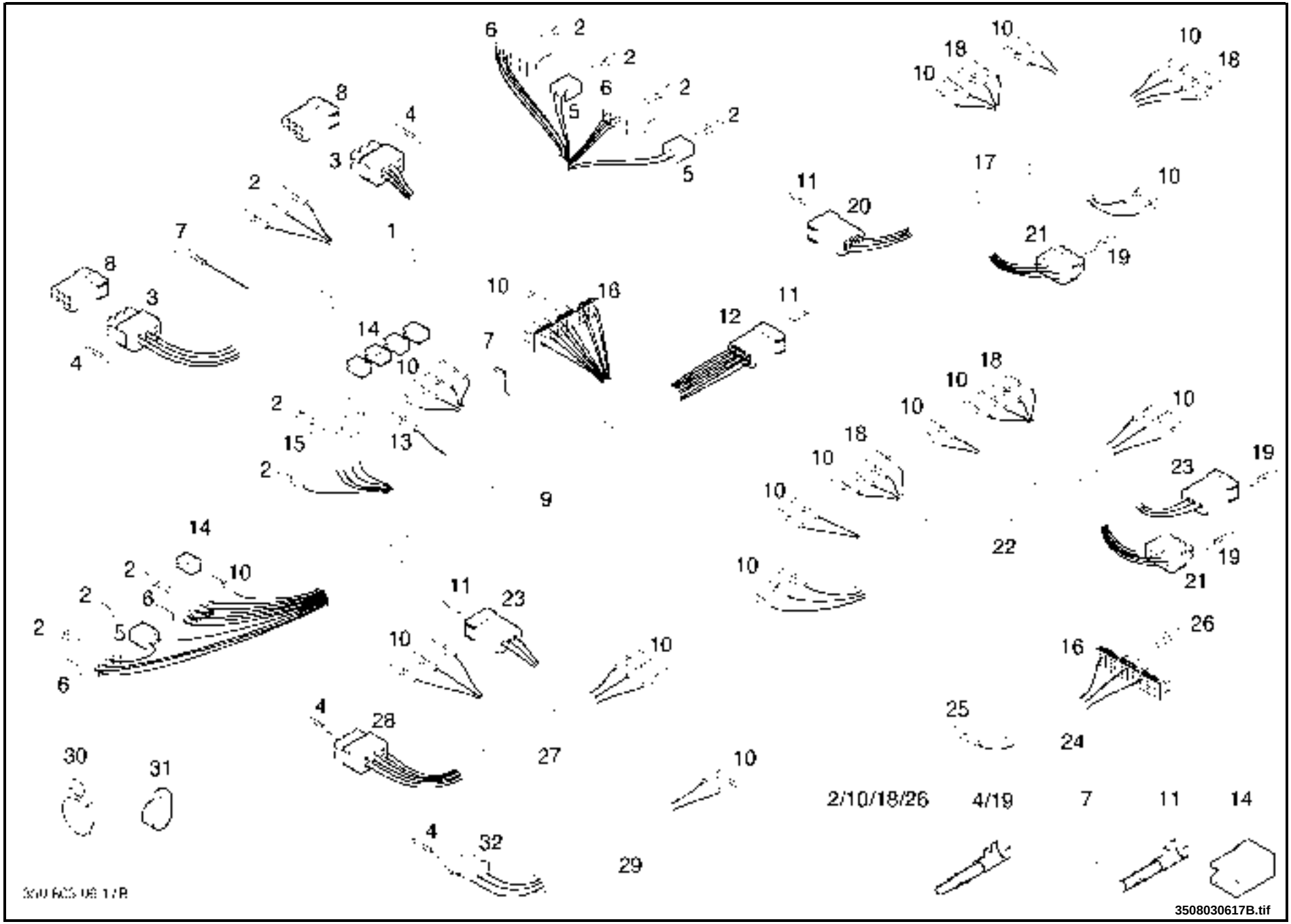

06

https://truckmanualshub.com/

CABLE TREES FOR LIGHTING

Pos.	Part-No.	I	Designation	Qantity	replaced by	Remarks
1	350 381 03 37		harness	1		for working lamp
2	7 9125 11 315		connecting bush DIN 46340	a.req.		
3	7 9125 03 846		housing plug	2		
4	7 9125 03 101		pin contact 2.1X20.1	a.req.		
5	000 975 17 65		socket housing 2-polig	3		
6	000 975 17 47		socket housing	4		
7	7 9125 00 255		cable shoe DIN 46225	a.req.		
8	7 9125 03 895		housing	2		
9	350 381 03 38		harness	1		console japan - lighting
10	7 9125 11 115		receptacle faston DIN 46247	a.req.		
11	7 9125 03 151		bush	a.req.		
12	7 9125 03 896		mounting housed	1		
13	7 9125 03 688		faston	a.req.		
14	7 9106 00 056		insulation sleeve E6,3-4,8	a.req.		
15	7 9125 03 526		housing socket	1		
16	7 9190 20 927		plug	2		
17	350 381 03 39		harness	1		by version lighting
18	7 9125 11 383		faston receptacle DIN 46340 B7.7X2.5-FORM B-Z4634	a.req.		
19	7 9125 03 102		pin	a.req.		
20	000 975 17 20		housed mounting 6-P	1		
21	7 9125 03 847		housing plug	2		
22	350 381 03 40		harness	1		=>| H2X350L02860 for lighting height up
22	350 381 03 54		harness	1		H2X350L02861 |=> for lighting height up
	7 9149 90 636		grommet cable 15/10X3-rubber	2		to pos. 22
	000 964 03 17		cable grommet 11/8x3	2		to pos. 22
23	000 975 17 18		housed mounting 3P	2		

1 = Packaged quantities 2 = Restricted availability 3 = Parts being phased out 4 = not available individually 5 = see separate list

https://truckmanualshub.com/

CABLE TREES FOR LIGHTING

Pos.	Part-No.	I	Designation	Qantity	replaced by	Remarks
24	350 381 03 55		harness	1		power supply for special attachments
25	7 9125 11 325		receptable faston DIN 46340	a.req.		
26	000 975 15 29		tab DIN 46340	a.req.		
27	350 381 05 45		cable loom	1		=>| H2X350L02020 rear blinker light
27	350 381 03 56		harness	1		H2X350L02021 |=> rear blinker light
	000 964 55 17		string adhesive 8x20	3		for 350.381.03.56
28	000 975 17 19		plug housing 6-P	2		
29	350 381 05 03		harness	1		number-plate light
30	000 955 26 04		clip fastening assy.	1		for 3503810338 lighting japan
30	000 950 22 18		clip assy.	4		for 350.381.03.56
31	000 955 22 04		clip support DIN 3016-1 D1-10x15-W1-1	1		for 3503810338 lighting japan
32	000 975 17 17		plug housing 3-P	1		

1 = Packaged quantities 2 = Restricted availability 3 = Parts being phased out 4 = not available individually 5 = see separate list

https://truckmanualshub.com/

https://truckmanualshub.com/

CABLE LOOMS FOR LIGHTING VERSION JAPAN

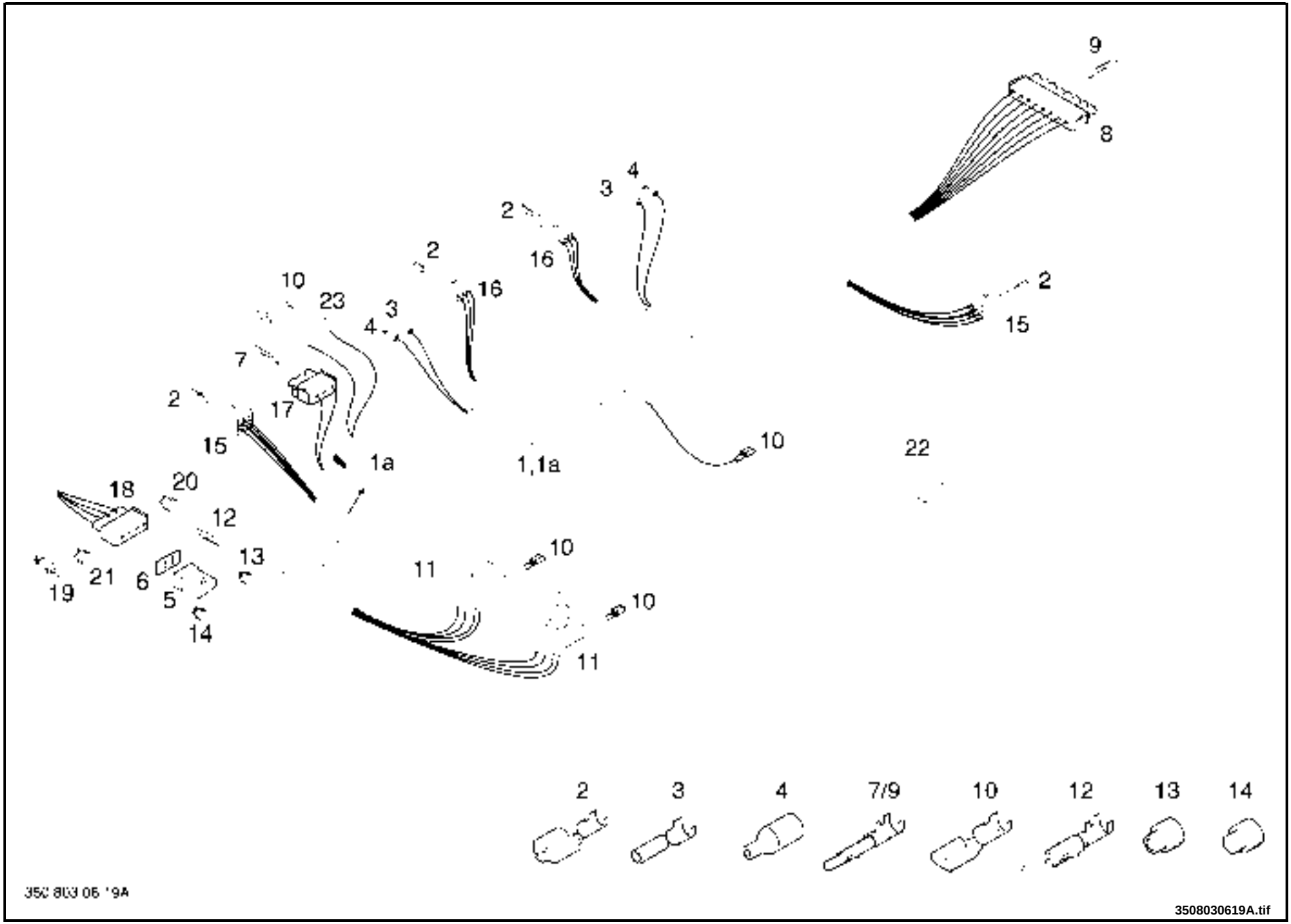

06

https://truckmanualshub.com/

CABLE LOOMS FOR LIGHTING VERSION JAPAN

Pos.	Part-No.	I	Designation	Qantity	replaced by	Remarks
1	350 381 03 46	3	harness	1	350 381 03 92	including: 1x 000.975.17.17 2x 7.9125.03.101
1	350 381 03 92		harness	1		
2	7 9125 01 205		receptacle faston 0,85-1,25	a.req.		
3	7 9125 01 255		receptacle faston 0,5-2,0	a.req.		
4	7 9125 01 265		receptacle faston	a.req.		
5	7 9125 03 122		tab housing 4 way	1		
6	7 9149 99 022		seal 4 way	1		
7	7 9125 03 101		pin contact 2.1X20.1	a.req.		
8	7 9125 03 847		housing plug	1		
9	7 9125 03 102		pin	a.req.		
10	7 9125 11 115		receptacle faston DIN 46247	a.req.		
11	7 9125 03 526		housing socket	2		
12	7 9125 03 753		tab 0,5-1,0	a.req.		
13	7 9149 99 019		seal 0,35-1	a.req.		
14	7 9149 99 025		stopper	a.req.		
15	7 9125 01 112		housing socket 6-way	2		
16	7 9125 01 110		housing socket 3-way	2		
17	000 975 17 17		plug housing 3-P	1		
18	7 9125 03 147		plug housing 4 way	1		
19	002 978 05 11		contact JPT-0,5-1	a.req.		
20	7 9149 99 019		seal 0,35-1	a.req.		
21	7 9149 99 025		stopper	a.req.		
22	000 955 01 58		clip cable	2		
23	7 9106 00 056		insulation sleeve E6,3-4,8	a.req.		
	000 964 55 17		string adhesive 8x20	2		
	000 955 23 03		adhesive base 35X25-black	1		

1 = Packaged quantities 2 = Restricted availability 3 = Parts being phased out 4 = not available individually 5 = see separate list

https://truckmanualshub.com/

CABLE LOOMS FOR LIGHTING VERSION JAPAN

06

Pos.	Part-No.	I	Designation	Qantity	replaced by	Remarks
	000 955 30 33		**clip 4,8x151**	**2**		

1 = Packaged quantities **2 = Restricted availability** **3 = Parts being phased out** **4 = not available individually** **5 = see separate list**

https://truckmanualshub.com/

https://truckmanualshub.com/

HARNES FOR PARTICLE FILTER =>I H2X350N03290

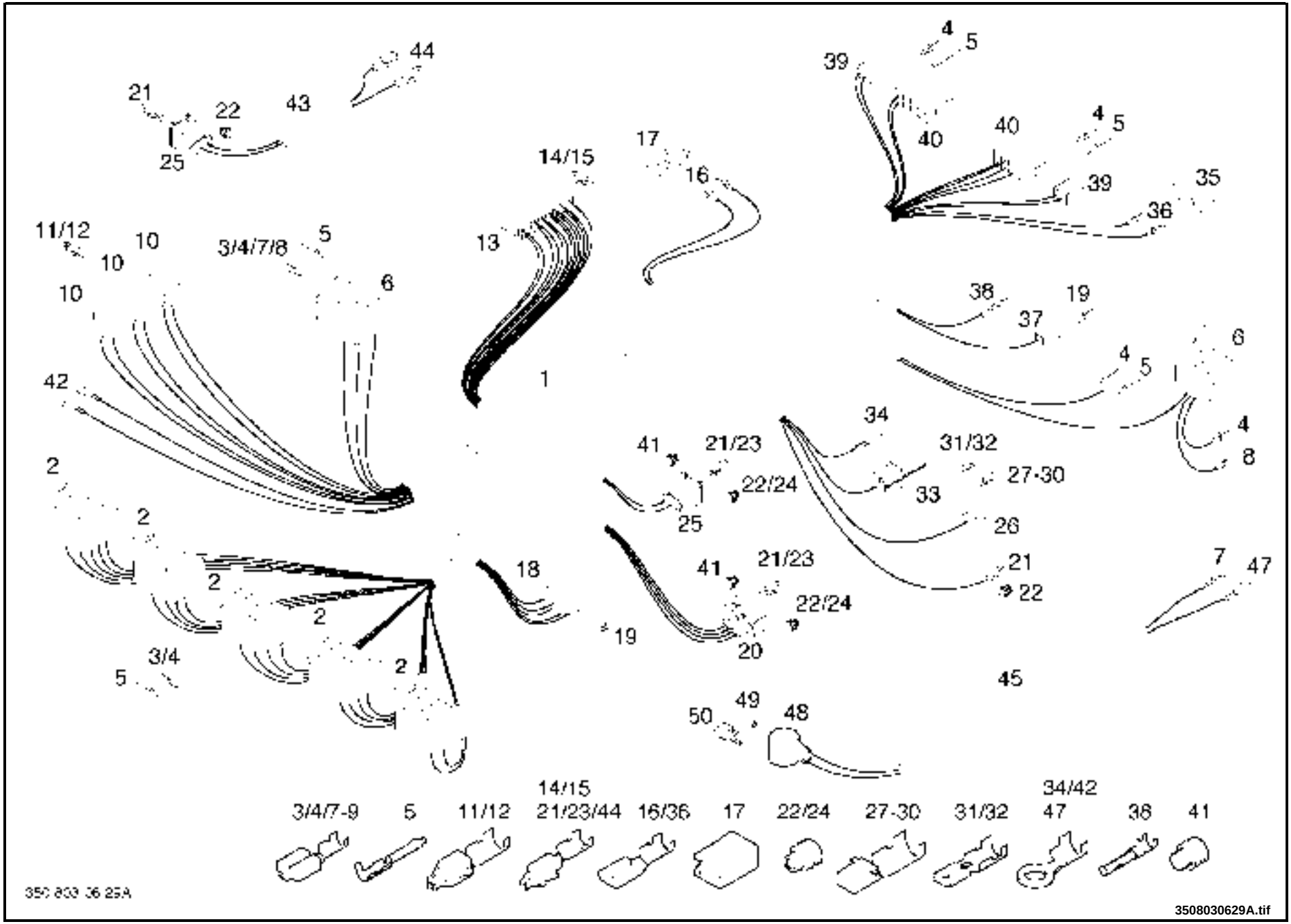

06

https://truckmanualshub.com/

HARNES FOR PARTICLE FILTER =>I H2X350N03290

Pos.	Part-No.	I	Designation	Qantity	replaced by	Remarks
1	350 381 03 52	3	harness	1	350 381 03 63	including: 1x 000.973.13.15 1x 9.008.610.096
1	350 381 03 63		harness	1		
2	7 9162 99 961		base	5		
3	7 9125 11 308		receptacle faston DIN 46340 B2,8-1 Ms	a.req.		
4	7 9125 11 315		connecting bush DIN 46340	a.req.		
5	7 9125 12 242		receptable faston DIN 46343 B6,3-1-Ms	a.req.		
6	7 9162 99 960		moulding	1		
7	7 9125 11 325		receptable faston DIN 46340	a.req.		
8	7 9125 03 688		faston	a.req.		
10	7 9190 95 001		fuse holder	3		
	7 9190 95 006		hood	3		
11	7 9190 95 053		contact DFK-4,0-6,0	a.req.		
12	7 9190 95 052		contact DFK-6,3x0,8	a.req.		
13	7 9150 06 002		housing plug	1		
14	7 9125 03 133		contact	a.req.		
15	7 9125 03 134		contact	a.req.		
16	7 9125 11 115		receptacle faston DIN 46247	a.req.		
17	7 9106 00 056		insulation sleeve E6,3-4,8	a.req.		
18	000 975 17 08		socket housing 8-P	1		
19	7 9125 11 365		receptable faston DIN 46340 B6.3-1MS-46340	a.req.		
20	7 9125 03 147		plug housing 4 way	1		
21	002 978 05 11		contact JPT-0,5-1	a.req.		
22	7 9149 99 019		seal 0,35-1	a.req.		
23	7 9125 03 140		contact	a.req.		
24	7 9149 99 020		seal AD-1,0-2,5	a.req.		
25	7 9125 03 146		housing 2 way	1		

1 = Packaged quantities 2 = Restricted availability 3 = Parts being phased out 4 = not available individually 5 = see separate list

https://truckmanualshub.com/

HARNES FOR PARTICLE FILTER =>I H2X350N03290

Pos.	Part-No.	I	Designation	Qantity	replaced by	Remarks
26	7 9125 15 503		housing 1 way	a.req.		
27	7 9125 15 001		contact	a.req.		
28	7 9125 15 002		receptacle faston	a.req.		
29	7 9125 15 005		connector 6-10	a.req.		
30	7 9125 15 004		housing	a.req.		
31	7 9125 15 007		contact tab 2,5-6,0	a.req.		
32	7 9125 15 003		tab 6-16	a.req.		
33	7 9125 15 504		housing tab 1 way	1		
34	7 9125 00 244		cable shoe DIN 46225 A8-1-46225	a.req.		
35	7 9106 00 050		sleeve insulating	a.req.		
36	7 9125 03 649		receptacle faston 2,8-1	a.req.		
37	000 975 17 28		housing 1X9.9	1		
38	7 9125 03 180		contact pin	a.req.		
39	000 975 17 65		socket housing 2-polig	2		
40	000 975 17 47		socket housing	2		
41	7 9149 99 025		stopper	a.req.		
42	7 9125 00 243		cable shoe DIN 46225	a.req.		
43	350 381 03 29		harness	1		adaptor - flame gauge
44	7 9125 03 133		contact	a.req.		
45	350 381 03 15		harness	1		plug glow
47	7 9125 00 256		connector DIN 46225	a.req.		
48	000 964 03 31		grommet cable(collar)	a.req.		
49	000 977 23 40		hose heat-shrinkage	a.req.		
50	----------	4	plug glow - connection	1		

1 = Packaged quantities 2 = Restricted availability 3 = Parts being phased out 4 = not available individually 5 = see separate list

https://truckmanualshub.com/

https://truckmanualshub.com/

HARNES FOR PARTICLE FILTER H2X350N03291 |=>

06

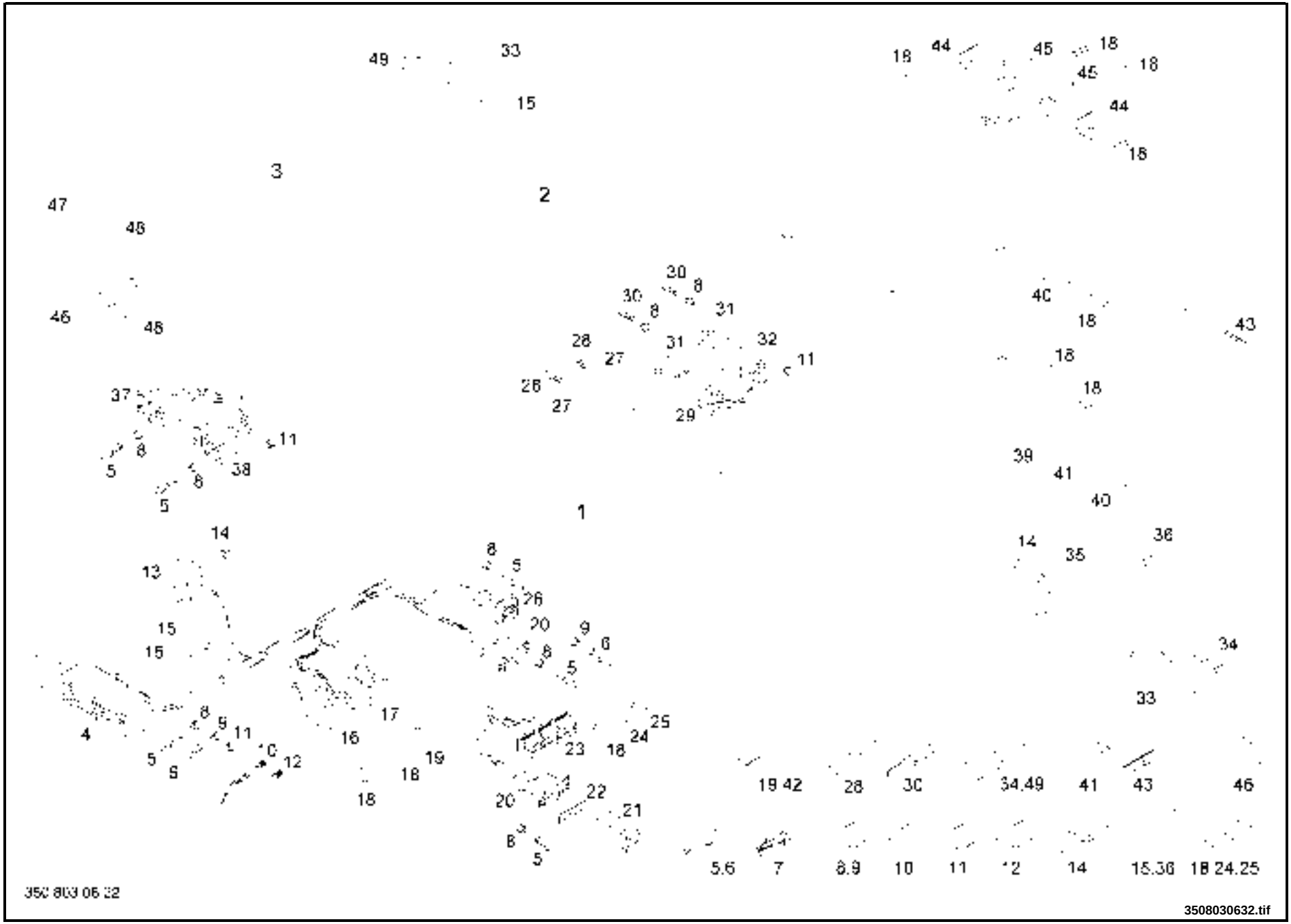

https://truckmanualshub.com/

HARNES FOR PARTICLE FILTER H2X350N03291 |=>

Pos.	Part-No.	I	Designation	Qantity	replaced by	Remarks
1	350 381 03 80		harness	1		particle filter
2	350 381 03 81		harness	1		particle filter console
3	350 381 03 82		harness	1		plug glow
4	7 9125 03 844		housing plug 42P	1		
5	7 9125 03 133		contact	a.req.		
6	7 9125 03 140		contact	a.req.		
7	7 9125 03 770		contact microtim-0,5	a.req.		
8	7 9149 99 019		seal 0,35-1	a.req.		
9	7 9149 99 020		seal AD-1,0-2,5	a.req.		
10	7 9149 99 017		seal 0,35-1,0	a.req.		
11	7 9149 99 025		stopper	a.req.		
12	7 9149 99 024		plug	a.req.		
13	7 9125 15 504		housing tab 1 way	1		
14	7 9125 15 007		contact tab 2,5-6,0	2		
15	7 9125 00 255		cable shoe DIN 46225	2		
16	7 9162 99 961		base	1		
17	7 9162 99 960		moulding	1		
18	7 9125 11 315		connecting bush DIN 46340	a.req.		
19	7 9125 11 369		receptacle faston DIN 46340 B6,3-6 Ms	a.req.		
20	7 9125 03 147		plug housing 4 way	2		
21	7 9125 03 122		tab housing 4 way	1		
22	7 9149 99 022		seal 4 way	1		
23	7 9190 20 926		plug	1		
24	000 975 15 29		tab DIN 46340	a.req.		
25	7 9125 11 319		faston DIN 46340	a.req.		
26	7 9125 03 146		housing 2 way	1		
27	7 9106 00 056		insulation sleeve E6,3-4,8	2		

1 = Packaged quantities 2 = Restricted availability 3 = Parts being phased out 4 = not available individually 5 = see separate list

https://truckmanualshub.com/

HARNES FOR PARTICLE FILTER H2X350N03291 |=>

Pos.	Part-No.	I	Designation	Qantity	replaced by	Remarks
28	7 9125 11 115		receptacle faston DIN 46247	a.req.		
29	7 9125 03 149		housing 6P	1		
30	7 9125 03 753		tab 0,5-1,0	a.req.		
31	7 9149 99 023		seal 6P	2		
32	7 9125 03 462		housing tab	1		
33	7 9125 15 503		housing 1 way	1		
34	7 9125 15 004		housing	1		
35	7 9125 15 504		housing tab 1 way	1		
36	7 9125 00 256		connector DIN 46225	1		
37	7 9125 03 123		plug housing 6P	1		
38	7 9125 03 420		housing tab	1		
39	000 975 15 33		housing 1X6.3	1		
40	000 975 17 28		housing 1X9.9	2		
41	7 9125 12 242		receptable faston DIN 46343 B6,3-1-Ms	a.req.		
42	7 9125 11 365		receptable faston DIN 46340 B6.3-1MS-46340	a.req.		
43	7 9125 03 180		contact pin	a.req.		
44	000 975 17 65		socket housing 2-polig	2		
45	000 975 17 47		socket housing	2		
46	----------	4	plug glow - connection	1		
47	000 964 03 31		grommet cable(collar)	1		
48	000 977 23 40		hose heat-shrinkage	2		
49	7 9125 15 002		receptacle faston	1		

06

1 = Packaged quantities 2 = Restricted availability 3 = Parts being phased out 4 = not available individually 5 = see separate list

https://truckmanualshub.com/

https://truckmanualshub.com/

HARNESS FOR FLASH LIGHTS / CONSOLE / LIGHT WARNING

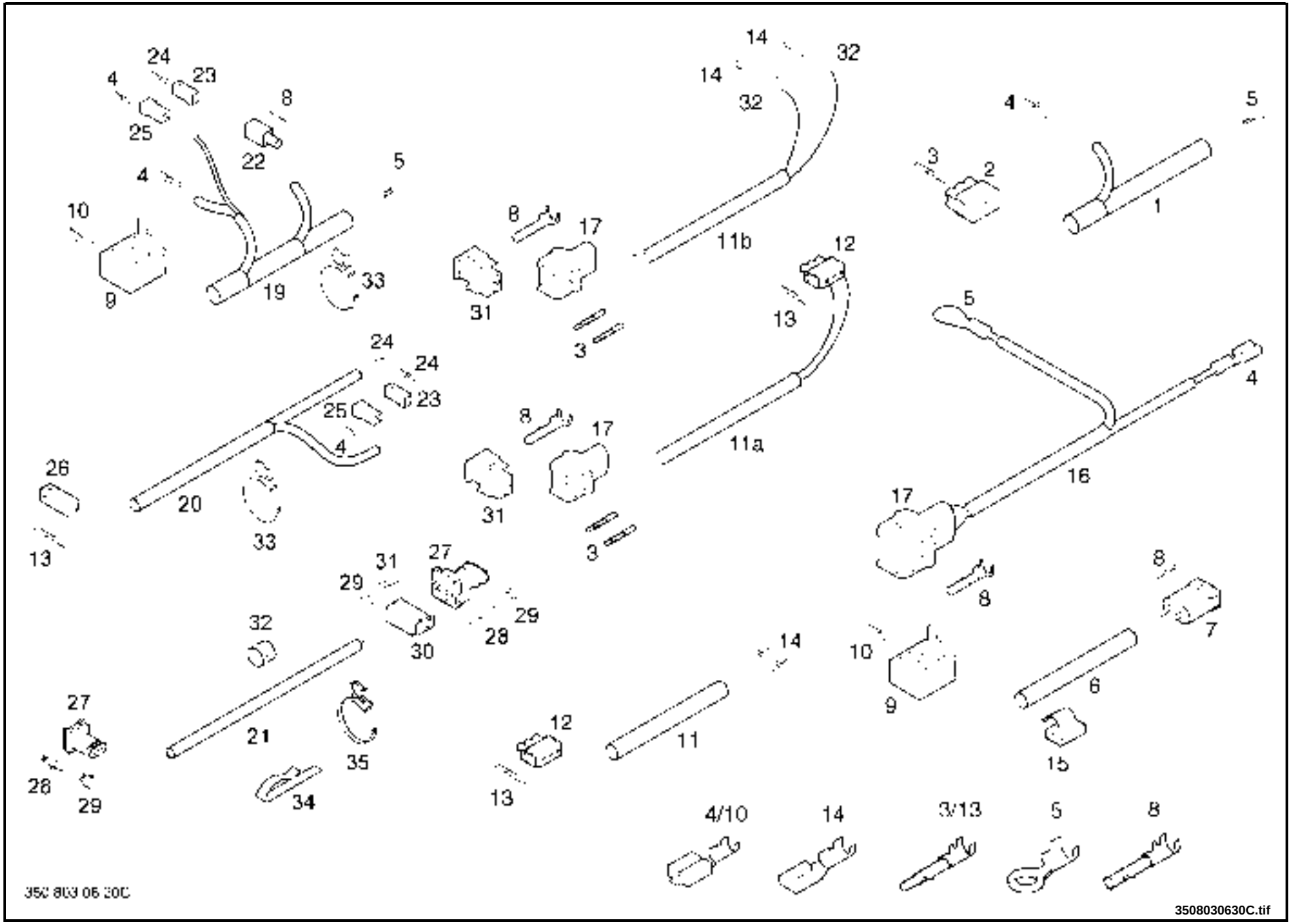

06

https://truckmanualshub.com/

HARNESS FOR FLASH LIGHTS / CONSOLE / LIGHT WARNING

Pos.	Part-No.	I	Designation	Qantity	replaced by	Remarks
1	350 381 03 67		harness	1		danger signal by reverse / console
2	000 975 17 19		plug housing 6-P	1		
3	7 9125 03 102		pin	a.req.		
4	7 9125 11 315		connecting bush DIN 46340	a.req.		
5	7 9125 00 243		cable shoe DIN 46225	a.req.		
6	350 381 03 66		harness	1		danger signal by reverse
7	000 975 17 20		housed mounting 6-P	1		
8	7 9125 03 151		bush	a.req.		
9	7 9125 03 526		housing socket	2		
10	7 9125 11 315		connecting bush DIN 46340	a.req.		
11	350 381 03 60		harness	1		=>| 03/2003 Buzzer
11a	350 381 03 86	3	harness	1	350 381 03 93	04/2003 |=> Buzzer including: 1x 000.975.17.17 2x 7.9125.03.101
	7 3780 00 021		adhesive string (mtr)(1 roll = 6m) 8	a.req.		
11b	350 381 03 93		harness	1		Buzzer
12	000 975 17 17		plug housing 3-P	1		
13	7 9125 03 101		pin contact 2.1X20.1	a.req.		
14	7 9125 11 115		receptacle faston DIN 46247	a.req.		
15	000 955 01 58		clip cable	1		
16	350 381 03 68		harness	1		flash light / identification light rotating b
17	7 9125 03 848		box 2 way	1		
18	7 9125 03 151		bush	a.req.		
19	350 381 03 70		harness	1		Consumer connector/switch - console
20	350 381 03 71		harness	1		Consumer connector/switch - vehicle
21	350 381 03 79		harness	1		seat switch

1 = Packaged quantities 2 = Restricted availability 3 = Parts being phased out 4 = not available individually 5 = see separate list

https://truckmanualshub.com/

HARNESS FOR FLASH LIGHTS / CONSOLE / LIGHT WARNING

Pos.	Part-No.	I	Designation	Qantity	replaced by	Remarks
	000 955 30 68		cable tie 4.6x205	1		
	000 955 20 37		cable tie 9X350 BLACK	1		
22	7 9125 03 816		mounting housed 1 way	1		
23	000 975 17 28		housing 1X9.9	2		
24	7 9125 11 365		receptable faston DIN 46340 B6.3-1MS-46340	a.req.		
25	000 975 15 33		housing 1X6.3	2		
26	000 975 17 38		housing plug	1		
27	7 9125 03 145		housing 3P	2		
28	002 978 05 11		contact JPT-0,5-1	a.req.		
29	7 9149 99 019		seal 0,35-1	a.req.		
30	7 9125 03 856		electrical housing.	1		
31	7 9125 03 850		plug disconnect	1		
32	7 9106 00 056		insulation sleeve E6,3-4,8	a.req.		

1 = Packaged quantities 2 = Restricted availability 3 = Parts being phased out 4 = not available individually 5 = see separate list

https://truckmanualshub.com/

https://truckmanualshub.com/

HARNESS LPG ULTRASONIC VOLUME INDICATOR

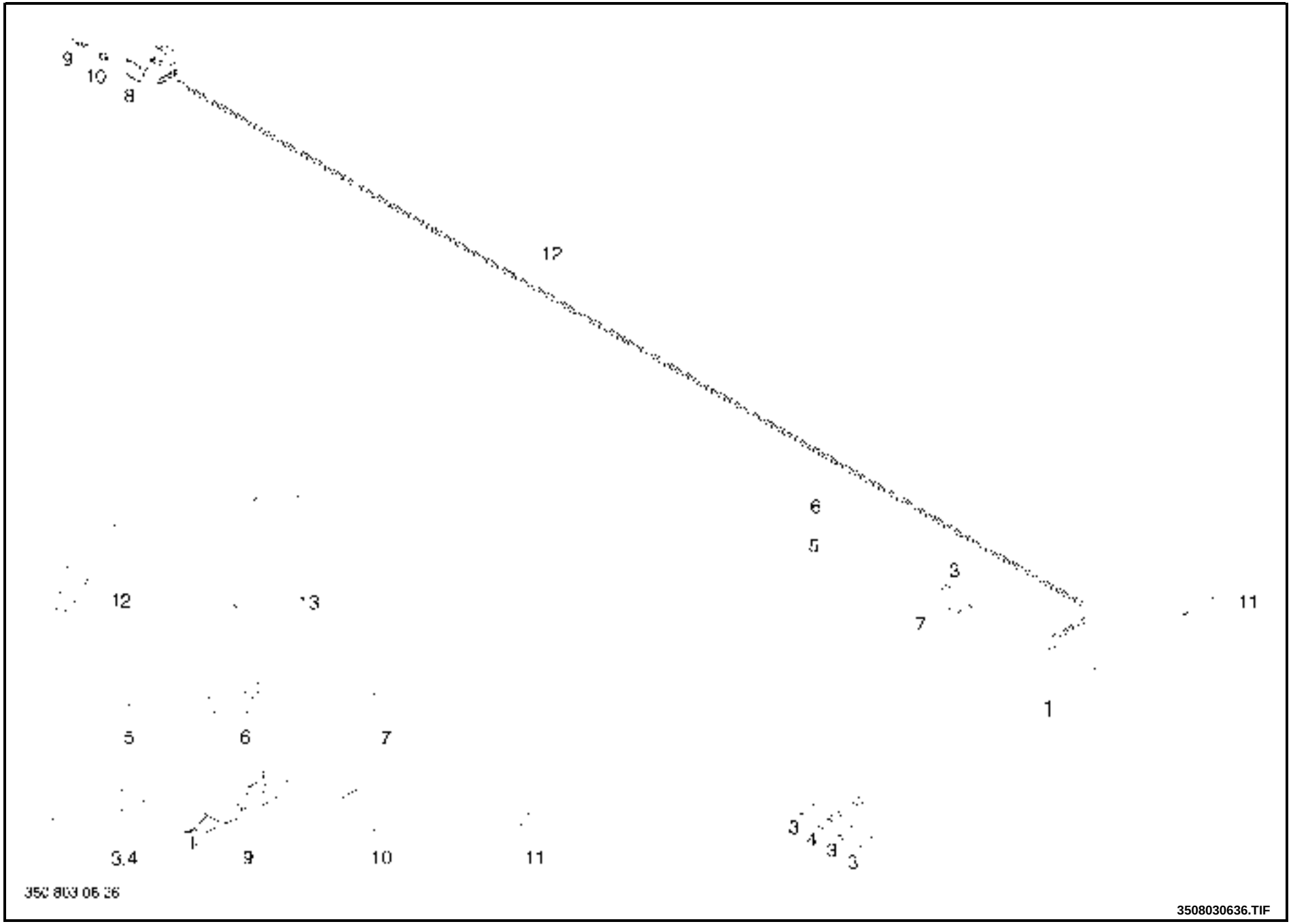

https://truckmanualshub.com/

HARNESS LPG ULTRASONIC VOLUME INDICATOR

Pos.	Part-No.	I	Designation	Qantity	replaced by	Remarks
1	350 381 03 88		harness	1		
3	7 9125 11 115		receptacle faston DIN 46247	3		
4	000 975 15 25		receptacle faston DIN 46247 6,3-2,5-MS	2		
5	000 975 15 00		flat-pin connector B6,3x0,8-Y46342	1		
6	9 208 056 090		hexagon nut ISO 4035 DIN 439-BM6-04A2C	1		
7	7 9125 00 249		connector DIN 46225	1		
8	7 9125 03 147		plug housing 4 way	1		
9	002 978 05 11		contact JPT-0,5-1	4		
10	7 9149 99 019		seal 0,35-1	4		
11	000 975 15 29		tab DIN 46340	1		
12	000 950 22 11		clip assy.	1		
13	000 955 30 68		cable tie 4.6x205	3		
	7 3780 00 021		adhesive string (mtr)(1 roll = 6m) 8	a.req.		

1 = Packaged quantities 2 = Restricted availability 3 = Parts being phased out 4 = not available individually 5 = see separate list

https://truckmanualshub.com/

https://truckmanualshub.com/

Register 07 : HYDRAULIC UNIT

07/01	00 - 03	CONTROL VALVE AND LINES
07/02	00 - 03	OIL TANK WITH LINES AND ACCESSORIES
07/03	00 - 02	OIL FILTER AND LINES FOR HYDRAULIC TRAVEL SYSTEM
07/04	00 - 01	TILT CYLINDER

https://truckmanualshub.com/

CONTROL VALVE AND LINES

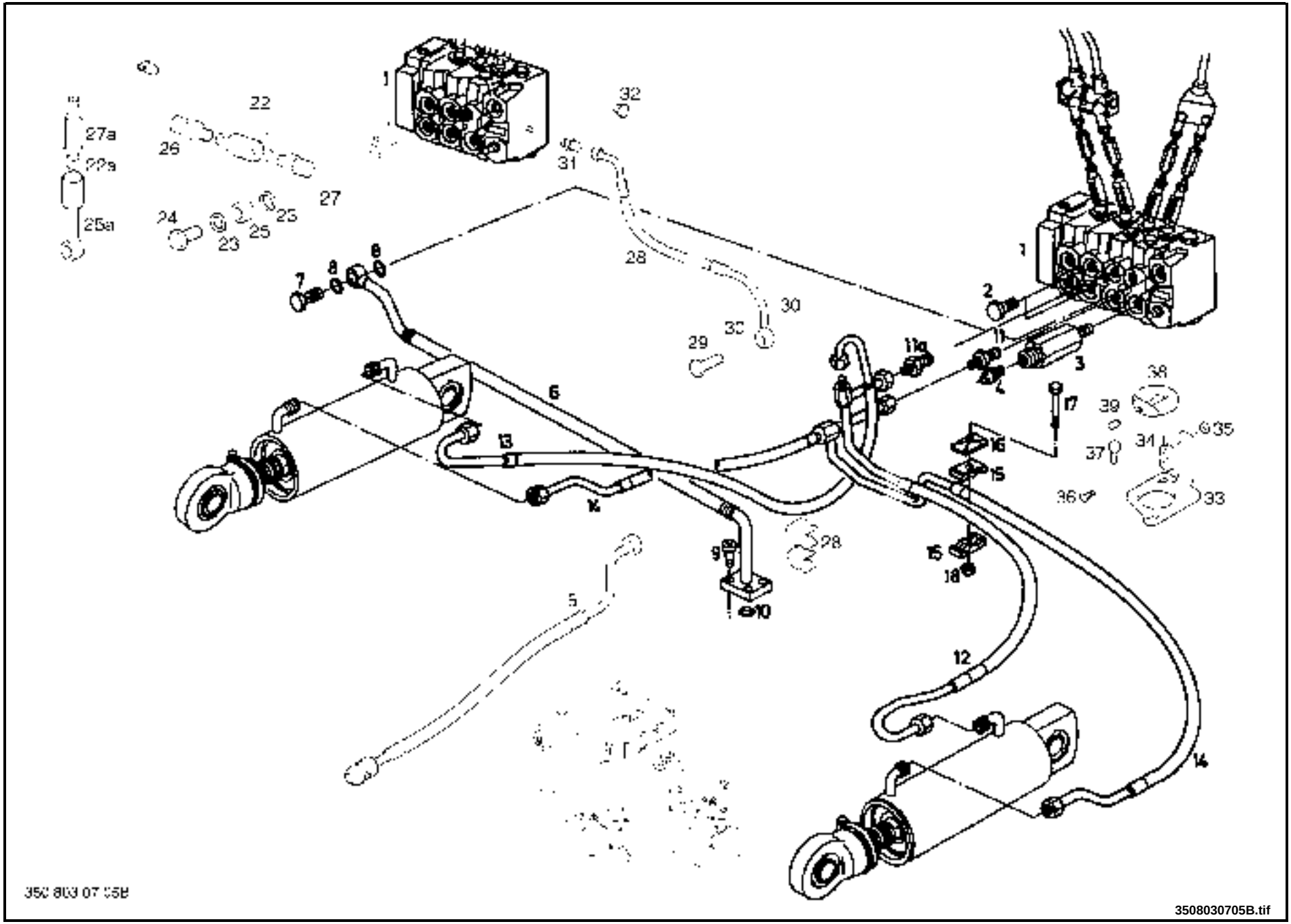

07

https://truckmanualshub.com/

CONTROL VALVE AND LINES

Pos.	Part-No.	I	Designation	Qantity	replaced by	Remarks
1	000 944 28 94		control valve EZH	1		3-way H12-H18
1	000 944 88 94		valve control ex. EZH	1		3-way H12-H18
1	000 944 29 88		control valve EZH	1		3-way H20/H20-600C
1	000 944 89 88		valve control ex. EZH	1		3-way H20/H20-600C
1	000 944 28 95		control valve DZH	1		4-way H12-H18
1	000 944 88 95		valve control ex. DZH	1		4-way H12-H18
1	000 944 29 89		control valve DZH	1		4-way H20/H20-600C
1	000 944 89 89		valve control ex. DZH	1		4-way H20/H20-600C
	000 944 02 11		valve section , extra hydraulics	1		for pos. 1
	000 944 14 01		shuttle valve	1		for pos. 1
	351 446 83 05		rod	3		3-way
	351 446 83 00		rod	3		4-way
	000 962 90 97		set of seals	1		for control valve and sliding
2	000 952 40 28		screw plug M18x1,5-A3C	2		piece deleted by auxiliary hydr.
3	000 951 22 04		socket	1		
	000 963 21 53		o ring	1		
4	000 944 23 38		flow control valve	1		
5	350 448 35 27		hose line 2STC-N/N	1		
	000 963 02 01	1	o-ring 20x2-V80	1		to pos. 5
	000 963 21 28	1	o ring 316 truck	1		to pos. 5
6	000 957 34 35	3	hoseline	1	350 448 35 49	
6	350 448 35 49		hose line 2STC12-S/J	1		
7	000 903 10 04		hollow screw	1		
8	000 963 22 05		o ring	2	000 963 21 49	
8	000 963 21 49		o-ring DIN 3770 19x2,5-V80	2		
9	9 045 311 135	1	socket-head screw ISO 4762 M6x25-8.8-A2C	4		
10	000 963 21 42		o ring 18,3X2,4-V80	1		

1 = Packaged quantities 2 = Restricted availability 3 = Parts being phased out 4 = not available individually 5 = see separate list

https://truckmanualshub.com/

CONTROL VALVE AND LINES

Pos.	Part-No.	I	Designation	Qantity	replaced by	Remarks
11	9 721 002 062		pipe union ISO 8434-1 SDS-S12xM18x1,5-type E-A3C-V	1		
11a	000 951 22 96		pipe union	1		
12	000 957 30 84		hose line	1		
	000 955 08 31		clip	1		to pos. 12
13	000 957 30 85		hose line	1		
14	350 448 35 13		hoseline	1		
	000 963 00 29	1	o ring 6x1,5-V80	a.req.		to pos. 12,13,14
	000 963 01 01	1	o ring DIN 3770	a.req.		to pos. 12,13,14
15	000 955 08 01		clip DIN 3015 12 diam double	2		
16	000 955 15 01		cover plate DIN 3015-3 Z-DP-1-W1	1		
17	9 008 311 147	1	hexagon head screw ISO 4017 M6x70-8.8-A2C	1		
18	9 210 281 090	1	hexagon nut ISO 4032 DIN 934-M6-8A2C	1		
22	000 962 04 36	1	seal 12x19x1,5-V80	2		=>| H2X350L02565
22a	000 963 21 06	1	o ring 11,3X2,4-V80	1		H2X350L02566 |=>
23	000 962 04 37	1	seal ring 14x22x1,5-V80	2		
24	9 170 281 080	1	banjo union DIN 7643	1		
25	350 440 14 04		pipe assy.	1		=>| H2X350L02565
25a	350 440 14 23		pipe assy.	1		H2X350L02566 |=>
26	7 9154 91 066		switch	1		=>| H2X350L02565
27	7 9154 91 065		switch	1		=>| H2X350L02565
27a	7 9174 15 580		sensor	1		H2X350L02566 |=> =>| H2X350R03587
27a	7 9174 15 582		sensor	1		H2X350R03588 |=>
	7 9125 03 835		housing 4 way			to pos. 27a
28	350 448 35 41		hoseline	1		H20/H20-600C
29	000 903 10 38		hollow screw	1		
30	000 963 21 06		o ring 11,3X2,4-V80	2		
31	9 721 000 008		pipe union'8L-7/16-20UNF DIN 3901	1		

1 = Packaged quantities 2 = Restricted availability 3 = Parts being phased out 4 = not available individually 5 = see separate list

https://truckmanualshub.com/

CONTROL VALVE AND LINES

Pos.	Part-No.	I	Designation	Qantity	replaced by	Remarks
32	000 903 02 09		screw plug WN 11355	1		H12/H16/H18
33	350 441 48 04		angle	1		LFM
34	7 9174 15 563		sensor	1		LFM
35	9 210 281 040	1	hexagon nut ISO 4032 M3-934-8A2C	1		Loctite nr. 243
36	9 051 216 039	1	countersunk screw DIN 963 M3x18-5.8	1		
37	9 045 316 125	1	socket-head screw ISO 4762 M6x10-8.8-A2C	2		
38	350 441 20 00		washer	1		LFM
39	9 133 339 031	1	threaded pin DIN 913 DIN 913-M3x5-22H	1		

1 = Packaged quantities 2 = Restricted availability 3 = Parts being phased out 4 = not available individually 5 = see separate list

https://truckmanualshub.com/

OIL TANK WITH LINES AND ACCESSORIES

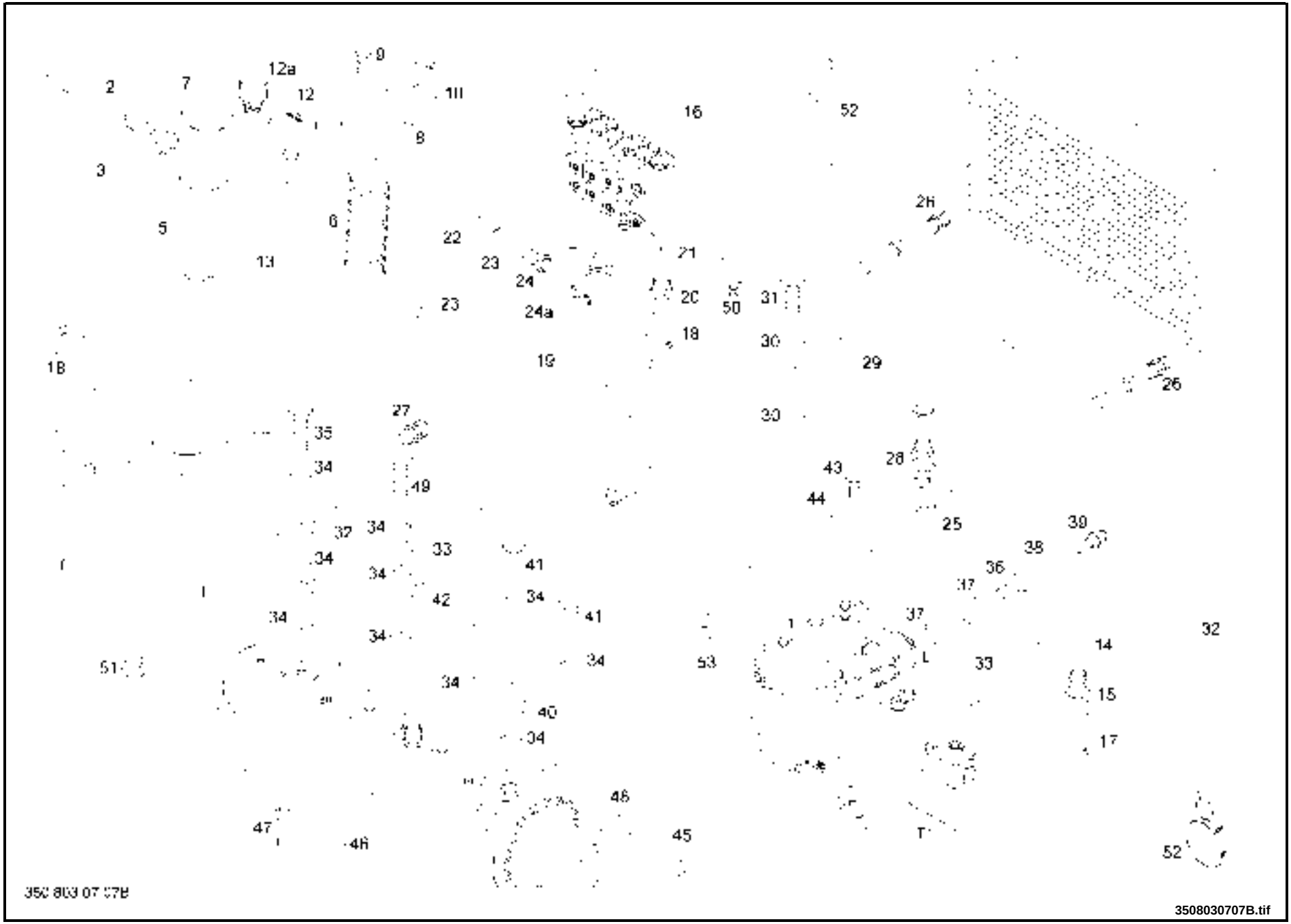

https://truckmanualshub.com/

OIL TANK WITH LINES AND ACCESSORIES

Pos.	Part-No.	I	Designation	Qantity	replaced by	Remarks
1	350 420 60 03		tank oil assy.	1		
	000 952 40 26		screw plug M14x1,5	1		for pos. 1
	9 636 801 143		seal ring DIN 7603 A14x18-Cu	1		for pos. 1
2	000 930 01 28		strap tightening assy.	1		
3	000 937 01 14		strap tightening 1.2X25X20X1050	1		Diesel version
3	000 937 01 55		strap tightening	1		03/2002 |=> version LPG
	000 983 08 42		suction filter	1		= pos. 5-7
5	000 983 77 03		pipe	1		
6	000 983 16 00		filter insert	1		
7	000 983 92 73		seal	1		
8	000 983 84 03		suction flange	1		
9	9 008 311 233		hexagon head screw ISO 4017 M10x16-8.8-A2C	3		
10	000 955 20 34		clip hose DIN 3017 A40-60x13-W2	1		
11	9 148 010 196	1	screw plug WN 14141 M22x1,5-V80-A2C	1		
12	000 983 21 08	3	filter ventilating	1	000 983 21 14	
12a	000 983 21 14		filter	1		
13	000 942 27 03		rod	1		
14	000 963 02 65		o ring 24x3-V80	1		
15	000 951 20 01		stud	1		
16	350 448 40 03		formed hose	1		
17	000 955 20 60		clip hose DIN 3017 A32-50x13-W2	1		
18	000 955 20 31		clip hose DIN 3017 A25-40x13-W2	2		
19	350 448 40 40		formed hose	1		
20	000 951 20 00		pipe union	1		
21	000 963 22 16		o-ring 23,52x1,78-V80	1		
22	350 448 40 06		formed hose	1		

1 = Packaged quantities 2 = Restricted availability 3 = Parts being phased out 4 = not available individually 5 = see separate list

https://truckmanualshub.com/

OIL TANK WITH LINES AND ACCESSORIES

Pos.	Part-No.	I	Designation	Qantity	replaced by	Remarks
23	000 955 20 09		clip hose DIN 3017 A16-27x9-W2	2		
24	000 951 21 08	3	pipe union	1	000 951 20 90	including: 000.963.21.46 for brake valve 674.340.61.00
24	000 951 20 90		connection piece	1		for brake valve 674.340.61.00
24	000 961 22 06		pipe union	1		for brake valve 674.340.61.02
24a	000 963 21 59		o-ring 17,17x1,8-V80	1	000 963 21 46	
24a	000 963 21 46		o ring	1		000.951.21.08 / 000.951.20.90
24a	000 963 21 24		o-ring 15,3x2,4-V80	1		000.961.22.06
25	000 957 30 87		hose line	1		
26	9 721 010 018		pipe union ISO 8434-1 SDS-L18xM22x1,5-type E-A3C-V	2		
27	9 721 002 022		pipe union ISO 8434-1 SDS-L22xM26x1,5-type E-A3C-V	1		
28	000 952 51 81		check valve	1		
29	350 448 41 06		pipe	1		
30	000 962 04 39		seal 22x32x2-V80	2		
31	9 170 281 160		bolt DIN 7643 18-ST-7643-A3C	1		
32	350 448 41 12		pipe	1		
33	350 448 41 13		pipe	1		
34	000 962 04 38		seal ring 18x26,5x2-V80	10		
35	9 170 281 140		banjo bolt DIN 7643	1		
36	000 903 10 86		screw - banjo+	1		
37	000 962 04 39		seal 22x32x2-V80	1		
38	000 962 04 37		seal ring 14x22x1,5-V80	1		
39	000 945 10 06		temperature switch	1		
40	350 448 41 11		pipe	1		
41	9 170 281 130		bolt banjo DIN 7643 15-ST-7643-A3C	2		
42	350 448 41 10		pipe	1		
43	9 008 311 177	1	hexagon head screw ISO 4017 M8x16-8.8-A2C	1		

1 = Packaged quantities 2 = Restricted availability 3 = Parts being phased out 4 = not available individually 5 = see separate list

https://truckmanualshub.com/

OIL TANK WITH LINES AND ACCESSORIES

Pos.	Part-No.	I	Designation	Qantity	replaced by	Remarks
44	9 758 400 230		clip pipe DIN 1596 23 bk	1		
45	9 010 312 406		hexagon head bolt ISO 8765 M20x1,5x100-8.8-A2C	2		
46	000 916 17 32		bush	2		
47	9 045 317 302		screw ISO 21269 M16x1,5x80-8.8-A2C	2		
48	000 916 19 25		bush	2		
49	000 903 10 57		hollow screw	1		
50	000 950 22 57		clip fastening assy.	1		
51	000 952 40 26		screw plug M14x1,5	1		
52	000 950 22 03		clip assy.	1		
53	000 950 22 72		clip fastening assy. A3+A4/11-16	1		

1 = Packaged quantities 2 = Restricted availability 3 = Parts being phased out 4 = not available individually 5 = see separate list

https://truckmanualshub.com/

OIL FILTER AND LINES FOR HYDRAULIC TRAVEL SYSTEM

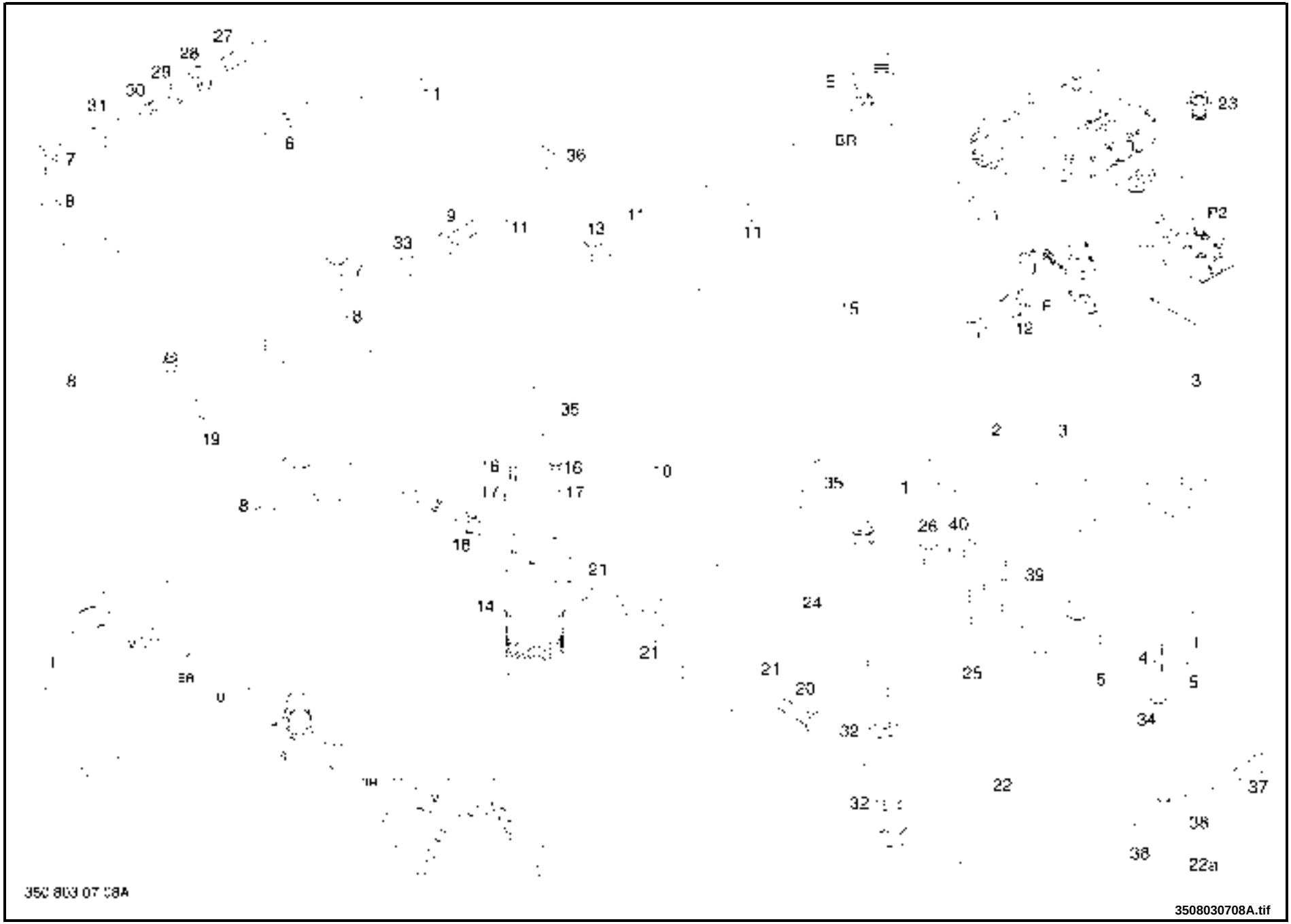

https://truckmanualshub.com/

OIL FILTER AND LINES FOR HYDRAULIC TRAVEL SYSTEM

Pos.	Part-No.	I	Designation	Qantity	replaced by	Remarks
1	350 448 35 38		hoseline	1		=>| H2X350L03350
1	350 448 35 43	3	hoseline	1	350 448 35 51	H2X350L03351 |=>
1	350 448 35 51		hose line 2STC12-S/J	1		
2	350 448 35 39		hoseline	1		=>| H2X350L03350
2	350 448 35 44	3	hose	1	350 448 35 50	H2X350L03351 |=>
2	350 448 35 50		hose line 2STC12-S/J	1		
3	000 963 02 27		o-ring DIN 3771 25x3,55-V80	4		
4	9 124 311 246	1	threaded stud DIN 939 M10x50-8.8-A2C	2		
5	9 045 316 247	1	socket-head screw ISO 4762 M10x55-8.8-A2C	6		
6	350 448 35 23		hoseline	1		
7	9 170 281 130		bolt banjo DIN 7643 15-ST-7643-A3C	2		
8	000 962 04 38		seal ring 18x26,5x2-V80	4		
9	000 903 10 12		hollow screw	1		
10	350 448 35 25		hoseline	1		
11	000 962 04 38		seal ring 18x26,5x2-V80	8		
12	9 721 010 018		pipe union ISO 8434-1 SDS-L18xM22x1,5-type E-A3C-V	1		
13	9 170 281 130		bolt banjo DIN 7643 15-ST-7643-A3C	1		
14	000 983 06 11		oil filter.	1		
	000 963 26 02		o-ring 61,5x2,65-V80	1		
	000 983 16 16		filter insert	1		
15	350 448 35 40		hoseline	1		
16	9 008 311 175	1	hexagon head screw ISO 4017 M8x12-8.8-A2C	3		
17	000 965 21 11		bumper rubber	3		
18	9 721 002 015		pipe union ISO 8434-1 SDS-L15xM18x1,5-type E-CFS-V	1		
19	350 448 35 24		hoseline	1		
	000 950 22 63		clip fastening assy.	1		
	000 955 30 60		tie cable	1		

1 = Packaged quantities 2 = Restricted availability 3 = Parts being phased out 4 = not available individually 5 = see separate list

https://truckmanualshub.com/

OIL FILTER AND LINES FOR HYDRAULIC TRAVEL SYSTEM

Pos.	Part-No.	I	Designation	Qantity	replaced by	Remarks
20	9 170 281 140		banjo bolt DIN 7643	1		
21	000 962 04 38		seal ring 18x26,5x2-V80	3		
22	350 448 35 28		hoseline	1		H12/H16/H18
22a	350 448 35 42		hoseline	1		H20/H20-600C
	000 963 21 28		o ring 316 truck	2		to pos. 22
23	000 951 01 03		stud	1		
24	350 441 70 01		damper	1		
25	350 441 58 01		support	1		
26	9 008 311 298	1	hexagon head screw ISO 4017 M12x30-8.8-A2C	2		
27	000 903 68 90		threaded pin	1		
28	9 243 281 140	1	locknut WN 14302 M12-8.8	1		
29	000 962 04 36	1	seal 12x19x1,5-V80	1		
30	9 607 021 060		lubrication nipple DIN 71412 71412-AM6	1		
31	000 905 01 22		cap nut M12	1		
32	9 273 201 196	1	hexagon nut DIN 80705	2		
33	000 952 40 25		screw plug M12x1,5	1		
34	9 210 281 130	1	nut hexagon ISO 4032 DIN 934-M10-8A2C	2		
35	000 950 22 36		clip fastening assy. A1+A4/18-30	3		
36	000 950 22 73		clip fastening assy. A3+A4/11-	1		
37	000 903 10 04		hollow screw	1		
38	000 963 22 05		o ring	2	000 963 21 49	
38	000 963 21 49		o-ring DIN 3770 19x2,5-V80	2		
39	350 363 14 28		support	1		
40	000 955 08 15		clamp hose	1		

1 = Packaged quantities 2 = Restricted availability 3 = Parts being phased out 4 = not available individually 5 = see separate list

https://truckmanualshub.com/

https://truckmanualshub.com/

TILT CYLINDER

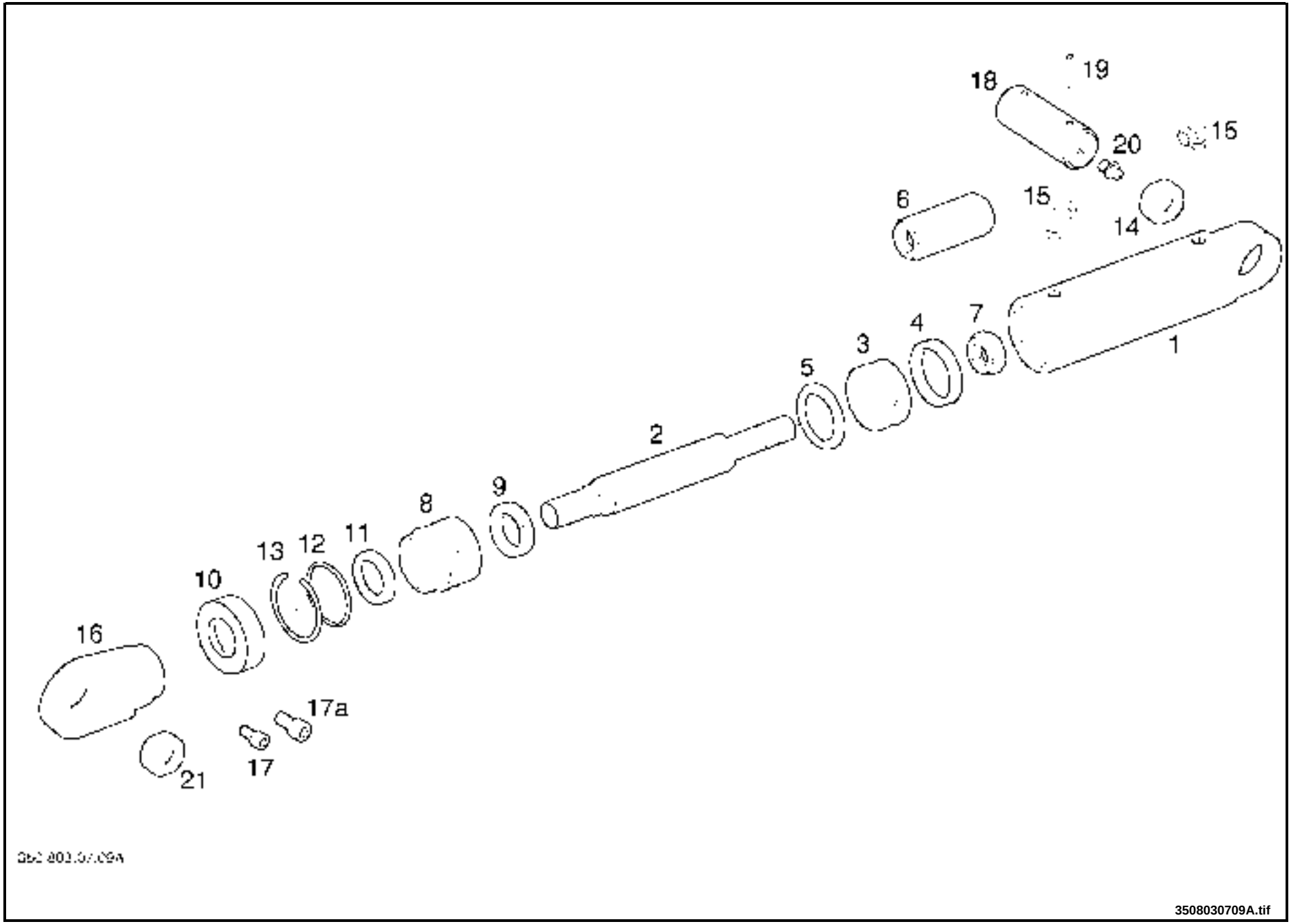

07

https://truckmanualshub.com/

TILT CYLINDER

Pos.	Part-No.	I	Designation	Qantity	replaced by	Remarks
	350 440 80 09		cylinder tilt assy.	2		= pos. 1-5,7-15 backward tilt 10 deg
	350 440 80 16		cylinder tilt assy.	2		= pos. 1-6,8-15 backward tilt 6 deg.
1	350 446 01 02		cylinder pipe	2		= pos. 1+14
2	350 446 03 03		piston rod	2		
3	335 446 11 00		piston	2		
4	000 962 33 12		drive band	2		
5	000 962 36 19		seal	2		
6	000 904 18 02		nut	2		
7	9 210 341 176	1	nut ISO 4032	2		
8	335 446 41 00		cylinder head	2		
9	000 962 19 73		ring	2		
10	000 962 50 55		cap	1		
11	000 962 25 22		wiper ring	2		
12	000 963 05 00		o ring	2		
13	9 461 620 280	1	snap ring DIN 7993 DIN 720 320/32X	2		
14	9 512 000 204		bearing ISO 12240-1 E20	2		
15	9 721 001 308		pipe union DIN 3903-L8-A3C	4		
16	350 440 31 00	3	eye bolt assy.	2	350 440 31 01	= pos. 16+21+17
16	350 440 31 01		eye bolt assy.	2		= pos. 16+21+17a
17	9 045 371 239	1	bolt ISO 4762 M10x25-12.9	2		
17a	9 045 341 295	1	socket-head screw ISO 4762 M12x25-10.9	2		
18	350 446 10 01		bolt	2		
19	9 380 620 324		spring dowel sleeve ISO 8752 6x40-ST	2		
20	9 607 021 080		lubricating nipple (cone) DIN 71412 AM8x1	2		
21	000 924 96 06		bearing	2		
	000 960 80 77		set of seal assy.	1		= pos. 4,5,9,11,12

1 = Packaged quantities 2 = Restricted availability 3 = Parts being phased out 4 = not available individually 5 = see separate list

https://truckmanualshub.com/

Register 08 : MAST ASSEMBLY AND AUXILIARY HYDRAULIC SE

08/01	00 - 06	STANDARD MAST TYPE 180, FORK CARRIAGE AND FORK ARMS
08/02	00 - 04	DUPLEX MAST TYPE 180
08/03	00 - 06	TRIPLEX MAST TYPE 180
08/04	00 - 21	LIFT CYLINDER FOR MAST LIFT TYPE 180
08/05	00 - 04	AUXILIARY HYDRAULICS FOR STANDARD MAST TYPE 180
08/06	00 - 04	AUXILIARY HYDRAULICS FOR DUPLEX MAST TYPE 180
08/07	00 - 05	AUXILIARY HYDRAULICS FOR TIPLEX MAST TYPE 180
08/08	00 - 02	SIDESHIFTER FOR STANDARD MAST TYPE 180 =>| H2X180L08640
08/08A	00 - 02	SIDESHIFTER FOR STANDARD MAST TYPE 180 H2X180L08641 |=>
08/09	00 - 02	SIDESHIFTER FOR DUPLEX MAST TYPE 180 =>| H2X180L09343
08/09A	00 - 02	SIDESHIFTER FOR DUPLEX MAST TYPE 180 H2X180L09344 |=>
08/10	00 - 02	SIDESHIFTER FOR TRIPLEX MAST TYPE 180 =>| H2X180L07369
08/10A	00 - 02	SIDESHIFTER FOR TRIPLEX MAST TYPE 180 H2X180L07370 |=>

https://truckmanualshub.com/

STANDARD MAST TYPE 180, FORK CARRIAGE AND FORK ARMS

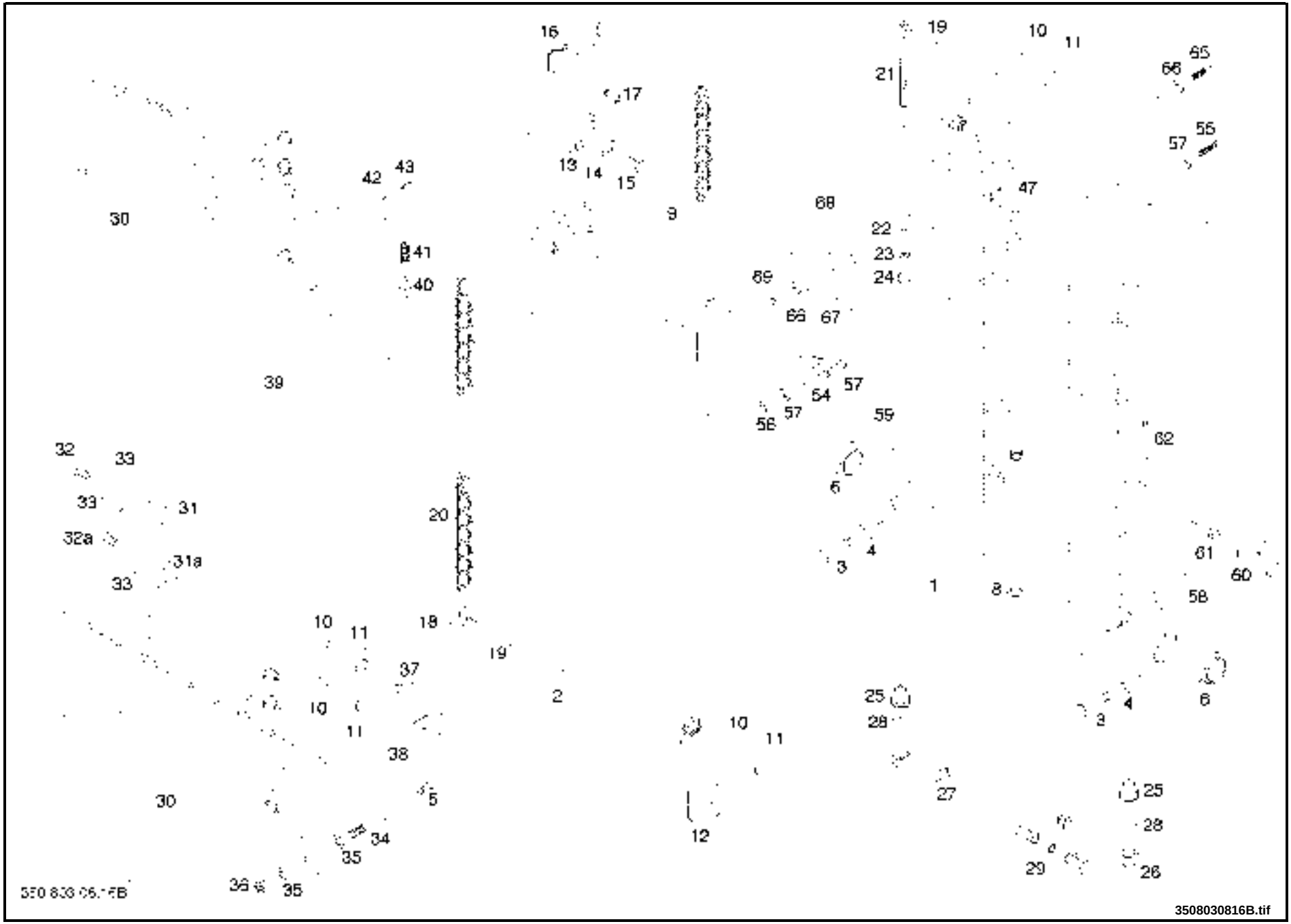

08

https://truckmanualshub.com/

STANDARD MAST TYPE 180, FORK CARRIAGE AND FORK ARMS

Pos.	Part-No.	I	Designation	Qantity	replaced by	Remarks
						S = standard D = duplex T = triplex HH = lift height (mm)
1	180 410 10 40	2	lift mast outer assy. 2850	1		
1	180 410 10 42	2	lift mast outer assy. 3050	1		
1	180 410 10 44	2	lift mast outer assy. 3250	1		
1	180 410 10 48	2	lift mast outer assy. 3650	1		
1	180 410 10 50	2	lift mast outer assy. 3850	1		
1	180 410 10 52	2	lift mast outer assy. 4050	1		
1	180 410 10 54	2	lift mast outer assy. 4250	1		
1	180 410 10 56	2	lift mast outer assy. 4450	1		
1	180 410 10 60	2	lift mast outer assy. 4850	1		
1	180 410 10 63	2	lift mast outer assy. 5150	1		
1	180 410 10 64	2	lift mast outer assy. 5250	1		
1	180 410 10 68	2	lift mast outer assy. 5650	1		
2	180 410 15 00	2	lift mast inner assy. 2850HH	1		
2	180 410 15 02	2	lift mast inner assy. 2910/3050HH	1		
2	180 410 15 04	2	lift mast inner assy. 3110/3250HH	1		
2	180 410 15 08	2	lift mast inner assy. 3510/3650HH	1		
2	180 410 15 10	2	lift mast inner assy. 3710/3850HH	1		
2	180 410 15 12	2	lift mast inner assy. 3910/4050HH	1		
2	180 410 15 14	2	lift mast inner assy. 4110/4250HH	1		
2	180 410 15 16	2	lift mast inner assy. 4310/4450HH	1		
2	180 410 15 20	2	lift mast inner assy. 4710/4850HH	1		
2	180 410 15 23	2	lift mast inner assy. 5010/5150HH	1		
2	180 410 15 24	2	lift mast inner assy. 5110/5250HH	1		
2	180 410 15 28	2	lift mast inner assy. 5510/5650HH	1		

1 = Packaged quantities 2 = Restricted availability 3 = Parts being phased out 4 = not available individually 5 = see separate list

https://truckmanualshub.com/

STANDARD MAST TYPE 180, FORK CARRIAGE AND FORK ARMS

Pos.	Part-No.	I	Designation	Qantity	replaced by	Remarks
3	9 010 342 447		hexagon head bolt DIN 960 M22x1,5x100-DAC-10.9	4	9 010 346 448	
3	9 010 346 448		hexagon head bolt ISO 8765 M22x1,5x105-10.9-DAC	4		
4	000 914 23 02	3	washer	4	000 914 23 07	
4	000 914 23 07		washer	4		
5	9 045 316 195	1	socket-head screw ISO 4762 M8x50-8.8-A2C	2		Loctite nr. 243
6	000 924 96 02		bearing spherical E45-2RS	2		
8	000 914 30 31		washer 30.5X43X7.5	2		
9	9 455 622 172	1	retaining ring DIN 471 DIN 471-16x1,5	2		
10	000 914 58 05		washer supporting 32x42x0.3-Y988	a.req.		
10	000 914 58 06		washer supporting 32x42x0.5-Y988	a.req.		
10	000 914 58 07		washer supporting 32X42X1-Y988	a.req.		
11	000 924 95 33		support roller 30X75.3X24	10		
11	000 924 95 34		support roller 30X75.6X24	10		
11	000 924 95 35		support roller 30X75.9X24	10		
12	180 446 09 01		guide	2		
13	000 993 36 26		chain pulley	2		
14	000 914 08 63		washer 8.4X45X5	2		
15	9 008 341 177	1	hexagon head screw ISO 4017 M8x16-10.9	2		Loctite nr. 243
16	180 446 16 00		hose roller guide	2		
17	9 045 316 126	1	socket-head screw ISO 4762 M6x12-8.8-A2C	4		
18	180 446 55 03		chain support	2		
19	000 912 11 22		pin WN 17514	4		
20	9 495 080 097		leaf chain WN 17514 A1-19,05x2x97	2		HH 2850 annex fork carriage
20	9 495 080 099		chain WN 17514	2		HH 2850 annex sideshift
20	9 495 080 101		leaf chain WN 17514 A1-19,05x2x101	2		HH 3050 annex fork carriage
20	9 495 080 103		chain WN 17514 A1-19,05x2x103	2		HH 3050 annex sideshift
20	9 495 080 107		leaf chain WN 17514 A1-19,05x2x107	2		HH 3250 annex fork carriage

1 = Packaged quantities 2 = Restricted availability 3 = Parts being phased out 4 = not available individually 5 = see separate list

https://truckmanualshub.com/

STANDARD MAST TYPE 180, FORK CARRIAGE AND FORK ARMS

Pos.	Part-No.	I	Designation	Qantity	replaced by	Remarks
20	9 495 080 109		chain WN 17514	2		HH 3250 annex sideshift
20	9 495 080 117		leaf chain WN 17514 A1-19,05x2x117	2		HH 3650 annex fork carriage
20	9 495 080 119		chain WN 17514	2		HH 3650 annex sideshift
20	9 495 080 123		leaf chain WN 17514 A1-19,05x2x123	2		HH 3850 annex fork carriage
20	9 495 080 125		chain WN 17514	2		HH 3850 annex sideshift
20	9 495 080 127		chain WN 17514	2		HH 4050 annex fork carriage
20	9 495 080 129		leaf chain WN 17514 A1-19,05x2x129	2		HH 4050 annex sideshift
20	9 495 080 133		leaf chain WN 17514 A1-19,05x2x133	2		HH 4250 annex fork carriage
20	9 495 080 135		chain WN 17514	2		HH 4250 annex sideshift
20	9 495 080 139		leaf chain WN 17514 A1-19.05x2x139	2		HH 4450 annex fork carriage
20	9 495 080 141		chain WN 17514	2		HH 4450 annex sideshift
20	9 495 080 149		leaf chain WN 17514 A1-19.05x2x149	2		HH 4850 annex fork carriage
20	9 495 080 151		chain WN 17514	2		HH 4850 annex sideshift
20	9 495 080 157		chain WN 17514	2		HH 5150 annex fork carriage
20	9 495 080 159		chain WN 17514 A1-19,05X2X159	2		HH 5150 annex sideshift
20	9 495 080 159		chain WN 17514 A1-19,05X2X159	2		HH 5250 annex fork carriage
20	9 495 080 161		chain WN 17514	2		HH 5250 annex sideshift
20	9 495 080 169		leaf chain WN 17514 A1-19,05x2x169	2		HH 5650 annex fork carriage
20	9 495 080 171		chain A1-19,05x2x171	2		HH 5650 annex sideshift
	000 912 22 03		bolt WN 17514 B7,8x34x27	a.req.		repair
21	180 446 55 00	3	chain anchor	2	181 445 05 00	
21	181 445 05 00		chain anchor	2		
22	9 309 412 022	1	washer DIN 7349 DIN 7349-13x30x6-A2C	2		
23	9 208 281 140	1	hexagon nut ISO 4035 DIN 439-BM12-6A2C	2		
24	9 210 281 140	1	hexagon nut ISO 4032 DIN 934-M12-8A2C	2		
25	000 944 23 48		pipe safety valve LBS-0.8/28	2		
26	180 448 41 06		pipe	1		

1 = Packaged quantities 2 = Restricted availability 3 = Parts being phased out 4 = not available individually 5 = see separate list

https://truckmanualshub.com/

STANDARD MAST TYPE 180, FORK CARRIAGE AND FORK ARMS

Pos.	Part-No.	I	Designation	Qantity	replaced by	Remarks
27	180 448 35 01		hose line 2STC10-N/N	1		
28	000 963 02 01		o-ring 20x2-V80	2		
29	000 963 20 20		o-ring 9x1,5-V80	1		
30	180 440 91 07	3	carriage fork assy. 1040 mm	1	180 440 91 23	S H12-H18
30	180 440 91 23		carriage fork assy.	1		S H12-H18
30	180 440 91 12	3	carriage fork assy. 1040 mm	1	180 440 91 22	S H20
30	180 440 91 22		carriage fork assy.	1		S H20
31	183 446 14 01		stop	1		S , D
31a	163 446 14 10		stop	1		T
32	9 045 316 293	1	socket-head screw ISO 4762 M12x20-8.8-A2C	1		Loctite nr. 270
32a	9 045 341 300	1	socket-head screw ISO 4762 M12x35-10.9	1		Loctite nr. 270
33	9 381 660 478	1	cylindrical pin ISO 8734 12m6x50-A-St	2		Loctite nr. 270
34	9 007 311 308	1	hexagon head bolt ISO 4014 M12x60-8.8-A2C	2		
35	9 309 412 022	1	washer DIN 7349 DIN 7349-13x30x6-A2C	4		
36	9 210 281 140	1	hexagon nut ISO 4032 DIN 934-M12-8A2C	2		
37	000 903 02 19		screw plug	2		Loctite nr. 243
38	000 964 45 71		filling piece	2		
39	100 447 09 00		fork arms 80x40x800	2		H12/H16
39	100 447 09 01		fork arm 80x40x900	2		H12/H16
39	100 447 09 02		fork arm 80x40x1000	2		H12/H16
39	100 447 09 03		fork arms 80x40x1100	2		H12/H16
39	100 447 09 04		fork arm 800A2-80x40x1200	2		H12/H16
39	100 447 09 05		fork arm 80X40X1300MM-A2	2		H12/H16
39	100 447 09 06		fork arm 80X40X1400MM-A2	2		H12/H16
39	100 447 09 07		fork arm 80x40x1500MM-A2	2		H12/H16
39	100 447 09 08		fork arm 80X40X1600MM-A2	2		H12/H16
39	100 447 09 09		fork arm 80X40X1800MM-A2	2		H12/H16

1 = Packaged quantities 2 = Restricted availability 3 = Parts being phased out 4 = not available individually 5 = see separate list

https://truckmanualshub.com/

STANDARD MAST TYPE 180, FORK CARRIAGE AND FORK ARMS

Pos.	Part-No.	I	Designation	Qantity	replaced by	Remarks
39	100 447 09 10		fork arm 80X40X2000MM-A2	2		H12/H16
39	100 447 12 01		fork arms 100x45x900	2		H18/H20
39	100 447 12 02		fork arms 100x45x1000	2		H18/H20
39	100 447 12 03		fork arm 100x45x1100	2		H18/H20
39	100 447 12 04		fork arm 1250A2-100x45x1200	2		H18/H20
39	100 447 12 05		fork arm 100x45x1300mm-a2	2		H18/H20
39	100 447 12 06		fork arm 100X45X1400MM-A2	2		H18/H20
39	100 447 12 07		fork arms 100x45x1500	2		H18/H20
39	100 447 12 08		fork arm 100X45X1600MM-A2	2		H18/H20
39	100 447 12 09		fork arm 1250A2-100x45x1800	2		H18/H20
39	100 447 12 10		fork arm 100X45X2000MM-A2	2		H18/H20
40	394 446 10 00		stop bolt	2		
41	000 921 91 51		pressure spring	2		
42	394 446 84 00		locking lever	2		
43	9 380 620 269	1	spring dowel sleeve ISO 8752 5x28-ST	2		
47	180 446 93 01		plate guard	2		
54	000 955 22 78		clip 48x2x40	4		HH 4750 |=> =>| 09/2000
55	9 008 346 190	1	hexagon head screw ISO 4017 M8x40-10.9-DAC	4		HH 4750 |=> =>| 09/2000
56	9 210 346 110	1	nut ISO 4032	4		HH 4750 |=> =>| 09/2000
57	9 308 003 018	1	washer ISO 7093-1 8-200HV-A2C	12		HH 4750 |=> =>| 09/2000
58	350 400 09 01		bearing block assy. left	1		= pos. 58+6
59	350 400 09 00		bearing block assy. right	1		= pos. 59+6
60	350 446 10 00		bolt	2		
61	9 607 021 080		lubricating nipple (cone) DIN 71412 AM8x1	2		
62	9 380 620 326	1	spring dowel sleeve ISO 8752 6x50-ST	2		
65	9 008 311 190	1	hexagon head screw ISO 4017 M8x40-8.8-A2C	4		HH 4750 |=> 10/2000 |=>
66	9 309 412 018	1	washer DIN 7349 DIN 7349-8.4x21x4,8A2C	8		HH 4750 |=> 10/2000 |=>

1 = Packaged quantities 2 = Restricted availability 3 = Parts being phased out 4 = not available individually 5 = see separate list

https://truckmanualshub.com/

Pos.	Part-No.	I	Designation	Qantity	replaced by	Remarks
67	180 440 48 00		support assy.	2		HH 4750 |=> 10/2000 |=>
68	000 965 35 03		spring element	2		HH 4750 |=> 10/2000 |=>
69	9 210 281 110	1	nut ISO 4032 934-M8-8A2C	4		HH 4750 |=> 10/2000 |=>

1 = Packaged quantities 2 = Restricted availability 3 = Parts being phased out 4 = not available individually 5 = see separate list

https://truckmanualshub.com/

https://truckmanualshub.com/

DUPLEX MAST TYPE 180

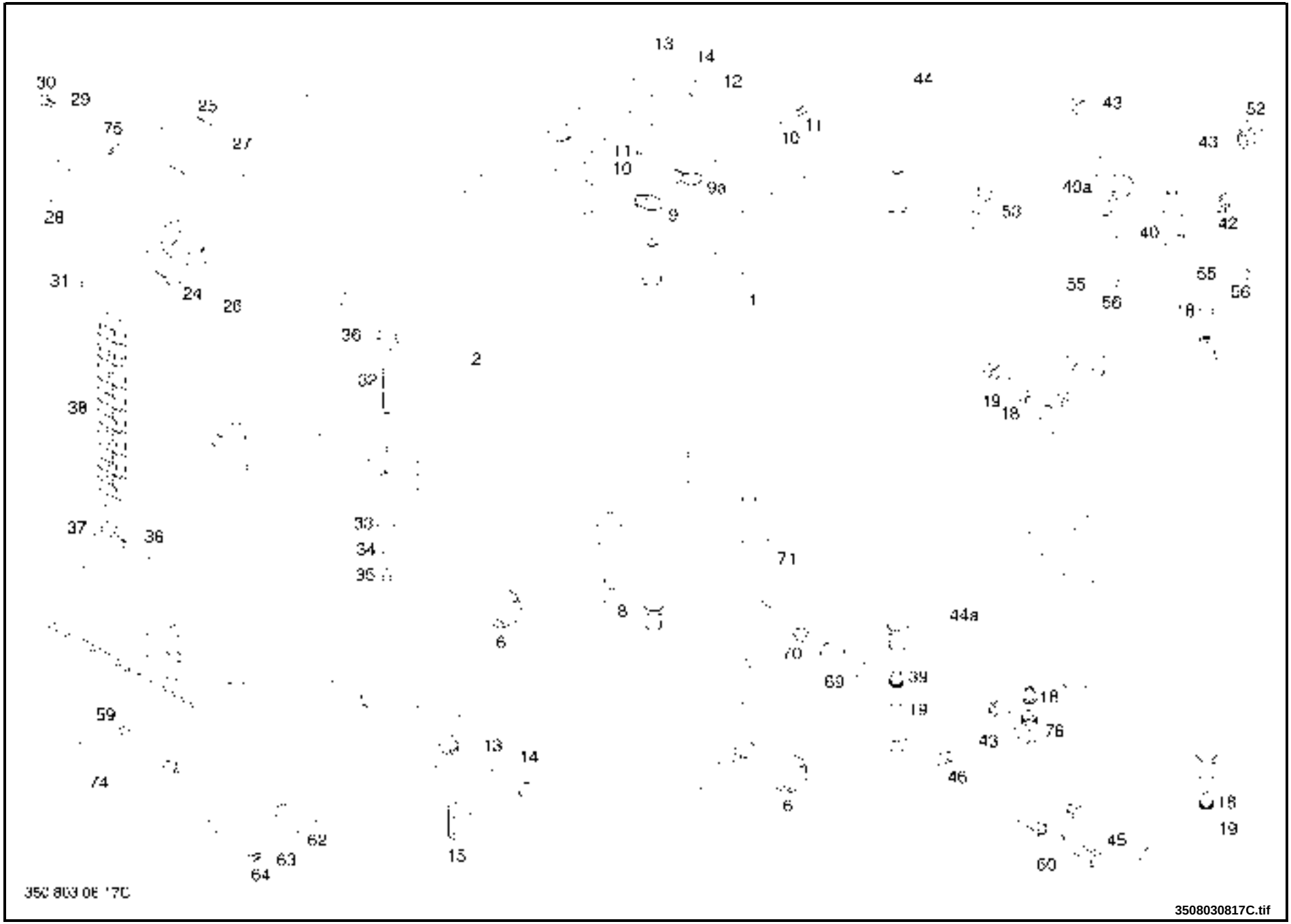

3508030817C.tif

08

https://truckmanualshub.com/

DUPLEX MAST TYPE 180

Pos.	Part-No.	I	Designation	Qantity	replaced by	Remarks
						HH = lift height (mm)
1	180 410 30 30	2	lift mast outer assy. 2770/4020	1		HH 2770
1	180 410 30 33	2	lift mast outer assy. 3070/4470	1		HH 3070
1	180 410 30 35	2	lift mast outer assy. 4770	1		HH 3270
1	180 410 30 38	2	lift mast outer assy. 3570/5220	1		HH 3570
1	180 410 30 40	2	lift mast outer assy. 3770	1		
2	180 410 25 30	2	lift mast inner assy. 2770	1		HH 2770
2	180 410 25 33	2	lift mast inner assy. 3025/3070HH	1		
2	180 410 25 35	2	lift mast inner assy. 3225/3270HH	1		HH 3270
2	180 410 25 38	2	lift mast inner assy. 3525/3570HH	1		
2	180 410 25 40	2	lift mast inner assy. 3725/3770HH	1		
6	000 924 96 02		bearing spherical E45-2RS	2		
8	000 914 30 31		washer 30.5X43X7.5	2		
9	000 955 05 01		clip	2		=>| H2X180N05686 for 180.440.52.01 ... 08 / 180.440.52.11 ... 18
9a	000 955 05 15		clip	2		H2X180N05687 |=> for 180.440.52.01 ... 08 / 180.440.52.11 ... 18
10	9 292 003 018	1	washer DIN 125 DIN 125-A8,4x16x1,6-A2C	2		
11	9 008 350 177	1	hexagon head screw ISO 4014 M8x16-10.9-MK8x3	2		
12	9 455 622 172	1	retaining ring DIN 471 DIN 471-16x1,5	2		
13	000 914 58 05		washer supporting 32x42x0.3-Y988	a.req.		
13	000 914 58 06		washer supporting 32x42x0.5-Y988	a.req.		
13	000 914 58 07		washer supporting 32X42X1-Y988	a.req.		
14	000 924 95 33		support roller 30X75.3X24	10		
14	000 924 95 34		support roller 30X75.6X24	10		
14	000 924 95 35		support roller 30X75.9X24	10		
15	180 446 09 01		guide	2		

1 = Packaged quantities 2 = Restricted availability 3 = Parts being phased out 4 = not available individually 5 = see separate list

https://truckmanualshub.com/

Pos.	Part-No.	I	Designation	Qantity	replaced by	Remarks
18	000 944 23 29		valve safety	3		Loctite nr. 270
19	000 963 02 01		o-ring 20x2-V80	3		
24	180 446 45 05	3	fork clevis	1	181 446 45 01	Loctite nr. 270
24	181 446 45 01		fork clevis	1		Loctite nr. 270
25	180 446 54 00		chain pulley	1		
26	000 912 21 02		pin 45X120	1		
27	000 924 85 27		bearing thrust washer DIN 5405 45x65x1	2		
28	180 446 24 00		angle	1		
29	9 292 003 018	1	washer DIN 125 DIN 125-A8,4x16x1,6-A2C	2		
30	9 008 311 177	1	hexagon head screw ISO 4017 M8x16-8.8-A2C	2		
31	000 962 01 00		plug WN 17253 8.8X9.5	1		=>| 06/2005
32	180 446 55 01		chain anchor	1		
33	000 915 18 25		ring	1		
34	9 211 281 166	1	hexagon nut DIN 936 M16X1.5-936-17H-A2C	1		
35	9 210 311 166	1	nut hex ISO 8673 M16X1.5-8A2C	1		
36	9 495 104 930	1	pin chain WN 17514 A-9,60x70,1	2		
37	180 446 55 04		support chain	1		
38	9 495 114 045	3	leaf chain A1-25.4x4x45	1	9 495 116 045	HH 2770
38	9 495 116 045	2	leaf chain A1-25,4x4x45	1		HH 2770
38	9 495 114 049	3	leaf chain A1-25.4x4x49	1	9 495 116 049	HH 3070
38	9 495 116 049	2	leaf chain A1-25,4x4x49	1		HH 3070
38	9 495 114 051	3	leaf chain A1-25.4x4x51	1	9 495 116 051	HH 3270
38	9 495 116 051	2	leaf chain A1-25,4x4x51	1		HH 3270
38	9 495 114 053	3	leaf chain A1-25.4x4x53	1	9 495 116 053	HH 3570
38	9 495 116 053	2	leaf chain A1-25,4x4x53	1		HH 3570
38	9 495 114 055	3	chain	1	9 495 116 055	HH 3770
38	9 495 116 055	2	leaf chain A1-25,4x4x55	1		HH 3770

1 = Packaged quantities 2 = Restricted availability 3 = Parts being phased out 4 = not available individually 5 = see separate list

https://truckmanualshub.com/

Pos.	Part-No.	I	Designation	Qantity	replaced by	Remarks
39	000 944 23 48		pipe safety valve LBS-0.8/28	1		Loctite nr. 270
40	180 446 63 15	3	connector	1	180 446 63 18	Loctite nr. 243
40a	180 446 63 18		connector	1		Loctite nr. 243
41	9 148 010 176	1	screw plug WN 14141 M18X1.5-14141-V80	1		
42	9 721 002 018	1	pipe union ISO 8434-1 SDS-L18xM18x1,5-type E-CFS-V	1		=>| 09/2000
43	000 963 01 06		o-ring 15x2-V80	2		=>| H2X180M11017
43	000 963 01 06		o-ring 15x2-V80	1		H2X180M11018 |=>
44	180 446 29 15		pipeline	1		=>| H2X180M11017 HH 2770
44	180 446 29 18		pipeline	1		=>| H2X180M11017 HH 3070
44	180 446 29 20		pipeline	1		=>| H2X180M11017 HH 3270
44	180 446 29 23		pipeline	1		=>| H2X180M11017 HH 3570
44	180 446 29 25		pipeline	1		=>| H2X180M11017 HH 3770
44a	180 446 29 77		pipe	1		H2X180M11018 |=> HH 2770
44a	180 446 29 80		pipe	1		H2X180M11018 |=> HH 3070
44a	180 446 29 82		pipe	1		H2X180M11018 |=> HH 3270
44a	180 446 29 85		pipe	1		H2X180M11018 |=> HH 3570
44a	180 446 29 87		pipe	1		H2X180M11018 |=> HH 3770
45	180 448 41 07		pipeline	1		
46	180 448 35 01		hose line 2STC10-N/N	1		
52	9 715 002 685		elbow DIN 3942 18L-V80-A3C	1		=>| H2X180M11017
53	000 922 70 07		spring clip	1		=>| H2X180M11017

1 = Packaged quantities 2 = Restricted availability 3 = Parts being phased out 4 = not available individually 5 = see separate list

https://truckmanualshub.com/

Pos.	Part-No.	I	Designation	Qantity	replaced by	Remarks
53	000 922 70 14		clip spring	1		H2X180M11018 |=>
55	9 636 801 063	1	seal ring DIN 7603 A8X11,5-Cu	1	000 961 02 28	
55	000 961 02 28	1	seal ring DIN 7603 A8x11,5-Cu	1		
56	9 008 311 174	1	hexagon head screw ISO 4017 M8x10-8.8-A2C	1	9 045 316 175	
56	9 045 316 175	1	socket-head screw ISO 4762 M8x12-8.8-A2C	1	000 901 01 93	
56	000 901 01 93	1	socket head screw	1		
59	9 045 316 175	1	socket-head screw ISO 4762 M8x12-8.8-A2C	1		Loctite nr. 270
60	000 963 20 20	1	o-ring 9x1,5-V80	1		
62	000 955 02 12		clip 76x30-W1	1		
63	9 291 003 020	1	washer DIN 125 B10,5x20x2-HV200-A2C	2		
64	9 008 311 236	1	hexagon head screw ISO 4017 M10x20-8.8-A2C	2		
69	350 446 10 00		bolt	2		
70	9 607 021 080		lubricating nipple (cone) DIN 71412 AM8x1	2		
71	9 380 620 326	1	spring dowel sleeve ISO 8752 6x50-ST	2		
74	180 440 91 09	3	carriage fork assy. 1040 mm	1	180 440 91 24	D H12-H18
74	180 440 91 24		carriage fork assy.	1		D H12-H18
74	180 440 91 13	3	carriage fork assy. 1040 mm	1	180 440 91 25	D H20
74	180 440 91 25		carriage fork assy.	1		
75	000 964 19 85		edge protection	1		
76	000 952 25 32		joint swivel	1		H2X180M11018 |=>

1 = Packaged quantities 2 = Restricted availability 3 = Parts being phased out 4 = not available individually 5 = see separate list

https://truckmanualshub.com/

https://truckmanualshub.com/

TRIPLEX MAST TYPE 180

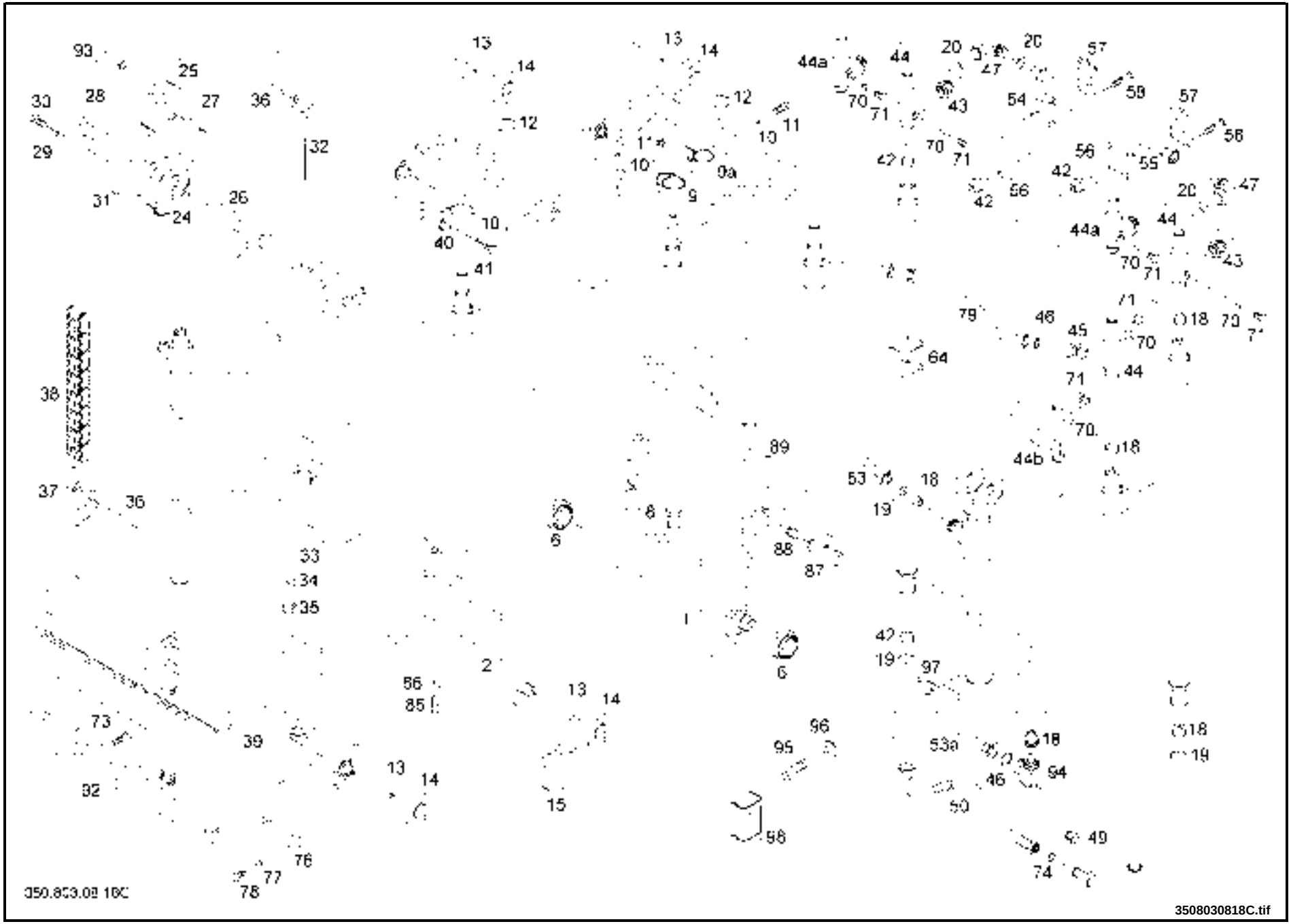

08

https://truckmanualshub.com/

TRIPLEX MAST TYPE 180

Pos.	Part-No.	I	Designation	Qantity	replaced by	Remarks
						HH = lift height (mm)
1	180 410 30 30	2	lift mast outer assy. 2770/4020	1		
1	180 410 30 31	2	lift mast outer assy. 2870/4170	1		
1	180 410 30 33	2	lift mast outer assy. 3070/4470	1		
1	180 410 30 34	2	lift mast outer assy. 4620	1		
1	180 410 30 35	2	lift mast outer assy. 4770	1		
1	180 410 30 38	2	lift mast outer assy. 3570/5220	1		
1	180 410 30 41	2	lift mast outer assy. 5470	1		
1	180 410 30 42	2	lift mast outer assy. 5620	1		
1	180 410 30 44	2	lift mast outer assy. 5920	1		
1	180 410 30 46	2	lift mast outer assy. 6220	1		
2	180 440 43 22	2	lift mast central assy. 4020HH	1		
2	180 440 43 23	2	lift mast central assy. 4170/4175HH	1		
2	180 440 43 25	2	lift mast central assy. 4470/4475HH	1		
2	180 440 43 26	2	lift mast central assy. 4620/4625HH	1		
2	180 440 43 27	2	lift mast central assy. 4770/4775HH	1		
2	180 440 43 30	2	lift mast central assy. 5220/5225HH	1		
2	180 440 43 32	2	lift mast central assy. 5470/5475HH	1		
2	180 440 43 33	2	lift mast central assy. 5620/5625HH	1		
2	180 440 43 35	2	lift mast central assy. 5920/5925HH	1		
2	180 440 43 37	2	lift mast central assy. 6220/6225HH	1		
6	000 924 96 02		bearing spherical E45-2RS	2		
8	000 914 30 31		washer 30.5X43X7.5	2		
9	000 955 05 01		clip	2		=>| H2X180N05686
9a	000 955 05 15		clip	2		H2X180N05687 |=>
10	9 292 003 018	1	washer DIN 125 DIN 125-A8,4x16x1,6-A2C	4		
11	9 008 350 177	1	hexagon head screw ISO 4014 M8x16-10.9-MK8x3	2		

1 = Packaged quantities 2 = Restricted availability 3 = Parts being phased out 4 = not available individually 5 = see separate list

https://truckmanualshub.com/

Pos.	Part-No.	I	Designation	Qantity	replaced by	Remarks
12	9 455 622 172	1	retaining ring DIN 471 DIN 471-16x1,5	4		
13	000 914 58 05		washer supporting 32x42x0.3-Y988	a.req.		
13	000 914 58 06		washer supporting 32x42x0.5-Y988	a.req.		
13	000 914 58 07		washer supporting 32X42X1-Y988	a.req.		
14	000 924 95 33		support roller 30X75.3X24	14		
14	000 924 95 34		support roller 30X75.6X24	14		
14	000 924 95 35		support roller 30X75.9X24	14		
15	180 446 09 01		guide	2		
18	000 944 23 29		valve safety	5		Loctite nr. 270
19	000 963 02 01		o-ring 20x2-V80	3		
24	180 446 45 05	3	fork clevis	1	181 446 45 01	Loctite nr. 270
24	181 446 45 01		fork clevis	1		Loctite nr. 270
25	180 446 54 00		chain pulley	1		
26	000 912 21 02		pin 45X120	1		
27	000 924 85 27		bearing thrust washer DIN 5405 45x65x1	2		
28	180 446 24 00		angle	1		
29	9 292 003 018	1	washer DIN 125 DIN 125-A8,4x16x1,6-A2C	3		
30	9 008 311 177	1	hexagon head screw ISO 4017 M8x16-8.8-A2C	2		
31	000 962 01 00		plug WN 17253 8.8X9.5	1		=>| 09/2005
32	180 446 55 01		chain anchor	1		
33	000 915 18 25		ring	1		
34	9 211 281 166	1	hexagon nut DIN 936 M16X1.5-936-17H-A2C	1		
35	9 210 311 166	1	nut hex ISO 8673 M16X1.5-8A2C	1		
36	9 495 104 930	1	pin chain WN 17514 A-9,60x70,1	2		
37	180 446 55 04		support chain	1		
38	9 495 114 045	3	leaf chain A1-25.4x4x45	1	9 495 116 045	HH 4020
38	9 495 116 045	2	leaf chain A1-25,4x4x45	1		HH 4020

1 = Packaged quantities 2 = Restricted availability 3 = Parts being phased out 4 = not available individually 5 = see separate list

https://truckmanualshub.com/

TRIPLEX MAST TYPE 180

Pos.	Part-No.	I	Designation	Qantity	replaced by	Remarks
38	9 495 114 047	3	leaf chain A1-25.4x4x47	1	9 495 116 047	HH 4170/4320
38	9 495 116 047	2	leaf chain A1-25,4x4x47	1		HH 4170/4320
38	9 495 114 049	3	leaf chain A1-25.4x4x49	1	9 495 116 049	HH 4470/4620
38	9 495 116 049	2	leaf chain A1-25,4x4x49	1		HH 4470/4620
38	9 495 114 051	3	leaf chain A1-25.4x4x51	1	9 495 116 051	HH 4770
38	9 495 116 051	2	leaf chain A1-25,4x4x51	1		HH 4770
38	9 495 114 053	3	leaf chain A1-25.4x4x53	1	9 495 116 053	HH 5220
38	9 495 116 053	2	leaf chain A1-25,4x4x53	1		HH 5220
38	9 495 114 057	3	leaf chain A1-25.4x4x57	1	9 495 116 057	HH 5470/5620
38	9 495 116 057	2	leaf chain A1-25,4x4x57	1		HH 5470/5620
38	9 495 114 059	3	leaf chain A1-25.4x4x59	1	9 495 116 059	HH 5920
38	9 495 116 059	2	leaf chain A1-25,4x4x59	1		HH 5920
38	9 495 114 061	3	leaf chain A1-25.4x4x61	1	9 495 116 061	HH 6220
38	9 495 116 061	2	leaf chain A1-25,4x4x61	1		HH 6220
39	180 410 33 50	2	lift mast inner assy. 4020HH	1		
39	180 410 33 51	2	lift mast inner assy. 4170/4175HH	1		
39	180 410 33 53	2	lift mast inner assy. 4470/4475HH	1		
39	180 410 33 54	2	lift mast inner assy. 4620/4625HH	1		
39	180 410 33 55	2	lift mast inner assy. 4770/4775HH	1		
39	180 410 33 58	2	lift mast inner assy. 5250/5255HH	1		
39	180 410 33 60	2	lift mast inner assy. 5470/5475HH	1		
39	180 410 33 61	2	lift mast inner assy. 5620/5625HH	1		
39	180 410 33 63	2	lift mast inner assy. 5920/5925HH	1		
39	180 410 33 65	2	lift mast inner assy. 6220/6225HH	1		
40	000 955 05 07		clip	2		
41	9 048 350 180	1	screw cap hd M8x20-10.9-MK 10x5	2		
42	000 944 23 48		pipe safety valve LBS-0.8/28	3		Loctite nr. 270

1 = Packaged quantities 2 = Restricted availability 3 = Parts being phased out 4 = not available individually 5 = see separate list

https://truckmanualshub.com/

Pos.	Part-No.	I	Designation	Qantity	replaced by	Remarks
43	9 721 002 015	1	pipe union ISO 8434-1 SDS-L15xM18x1,5-type E-CFS-V	2		=>| 09/2000
44	180 446 63 15	3	connector	3	180 446 63 19	Loctite nr. 243
					180 446 63 18	
44a	180 446 63 19	3	connector	2	180 446 63 21	Loctite nr. 243
44a	180 446 63 21		connector	2		Loctite nr. 243
44b	180 446 63 18		connector	1		Loctite nr. 243
45	9 721 002 018	1	pipe union ISO 8434-1 SDS-L18xM18x1,5-type E-CFS-V	1		=>| H2X180M11003
46	000 963 01 06		o-ring 15x2-V80	a.req.		
47	001 952 30 00		screw joint	2		=>| 09/2002
49	180 448 41 07		pipeline	1		
50	180 448 35 01		hose line 2STC10-N/N	1		
53	180 448 22 21		pipeline	1		=>| H2X180M11003 HH 4020
53	180 448 22 22		pipeline	1		=>| H2X180M11003 HH 4170
53	180 448 22 24		pipeline	1		=>| H2X180M11003 HH 4470
53	180 448 22 25		pipeline	1		=>| H2X180M11003 HH 4620
53	180 448 22 26		pipe	1		=>| H2X180M11003 HH 4770
53	180 448 22 29		pipe line	1		=>| H2X180M11003 HH 5220
53	180 448 22 32		pipeline	1		=>| H2X180M11003 HH 5470
53	180 448 22 33		pipe line	1		=>| H2X180M11003 HH 5620
53	180 448 22 35		pipe	1		=>| H2X180M11003 HH 5920
53	180 448 22 37		pipeline	1		=>| H2X180M11003 HH 6220

1 = Packaged quantities 2 = Restricted availability 3 = Parts being phased out 4 = not available individually 5 = see separate list

https://truckmanualshub.com/

Pos.	Part-No.	I	Designation	Qantity	replaced by	Remarks
53a	180 448 22 57		pipe	1		H2X180M11004 |=> HH 4020
53a	180 448 22 58		pipe	1		H2X180M11004 |=> HH 4170
53a	180 448 22 60		pipe	1		H2X180M11004 |=> HH 4470
53a	180 448 22 61		pipe	1		H2X180M11004 |=> HH 4620
53a	180 448 22 62		pipe	1		H2X180M11004 |=> HH 4770
53a	180 448 22 65		pipe	1		H2X180M11004 |=> HH 5220
53a	180 448 22 68		pipe	1		H2X180M11004 |=> HH 5470
53a	180 448 22 69		pipe	1		H2X180M11004 |=> HH 5620
53a	180 448 22 71		pipe	1		H2X180M11004 |=> HH 5920
53a	180 448 22 73		pipe	1		H2X180M11004 |=> HH 6220
54	180 446 29 62	3	pipeline	1	180 446 29 74	
54	180 446 29 74		pipe	1		
55	180 446 29 63	3	pipeline	1	180 446 29 75	
55	180 446 29 75		pipe	1		
56	000 963 23 03		o ring DIN 3770	2		
57	180 441 19 02		plate	2	180 441 19 10	including: 1x 9.045.346.137
57	180 441 19 10		plate	2		
58	9 045 311 135	1	socket-head screw ISO 4762 M6x25-8.8-A2C	8	9 045 346 137	
58	9 045 346 137	1	socket head screw ISO 4762 M6x30-10.9-DAC	8		
64	000 922 70 07		spring clip	1		
70	9 636 801 063	1	seal ring DIN 7603 A8X11,5-Cu	3	000 961 02 28	

1 = Packaged quantities 2 = Restricted availability 3 = Parts being phased out 4 = not available individually 5 = see separate list

https://truckmanualshub.com/

TRIPLEX MAST TYPE 180

Pos.	Part-No.	I	Designation	Qantity	replaced by	Remarks
70	000 961 02 28	1	seal ring DIN 7603 A8x11,5-Cu	3		
71	9 008 311 174	1	hexagon head screw ISO 4017 M8x10-8.8-A2C	3	9 045 316 175	
71	9 045 316 175	1	socket-head screw ISO 4762 M8x12-8.8-A2C	3	000 901 01 93	
71	000 901 01 93	1	socket head screw	3		
73	9 045 316 175	1	socket-head screw ISO 4762 M8x12-8.8-A2C	1		
74	000 963 20 20		o-ring 9x1,5-V80	1		
75	000 964 23 25		bush	1		
76	000 955 02 12		clip 76x30-W1	1		
77	9 291 003 020	1	washer DIN 125 B10,5x20x2-HV200-A2C	2		
78	9 008 311 236	1	hexagon head screw ISO 4017 M10x20-8.8-A2C	2		
79	180 446 29 39		pipe	1		
85	9 008 311 233	1	hexagon head screw ISO 4017 M10x16-8.8-A2C	2		Loctite nr. 270
85	9 008 320 234	1	hexagon head screw ISO 4017 M10x16-8.8A2C-MK-8x3	2		
86	9 309 412 020	1	washer DIN 7349 DIN 7349-10,5x25x4	2		
87	350 446 10 00		bolt	2		
88	9 607 021 080		lubricating nipple (cone) DIN 71412 AM8x1	2		
89	9 380 620 326	1	spring dowel sleeve ISO 8752 6x50-ST	2		
92	180 440 91 06	3	carriage fork assy. 1040 mm	1	180 440 91 20	T H12-H18
92	180 440 91 20		carriage fork assy.	1		T H12-H18
92	180 440 91 14	3	carriage fork assy. 1040 mm	1	180 440 91 21	T H20
92	180 440 91 21		carriage fork assy.	1		T H20
93	000 964 19 85		edge protection	1		
94	000 952 25 32		joint swivel	1		H2X180M11004 |=>
95	9 045 316 175		socket-head screw ISO 4762 M8x12-8.8-A2C	1		
96	9 292 003 018		washer DIN 125 DIN 125-A8,4x16x1,6-A2C	1		
97	000 955 01 04		clip DIN 1596 19 bk	1		12/2001 |=> =>| 01/2002
98	000 922 70 14		clip spring	1		02/2002 |=>

1 = Packaged quantities 2 = Restricted availability 3 = Parts being phased out 4 = not available individually 5 = see separate list

https://truckmanualshub.com/

https://truckmanualshub.com/

LIFT CYLINDER FOR MAST LIFT TYPE 180

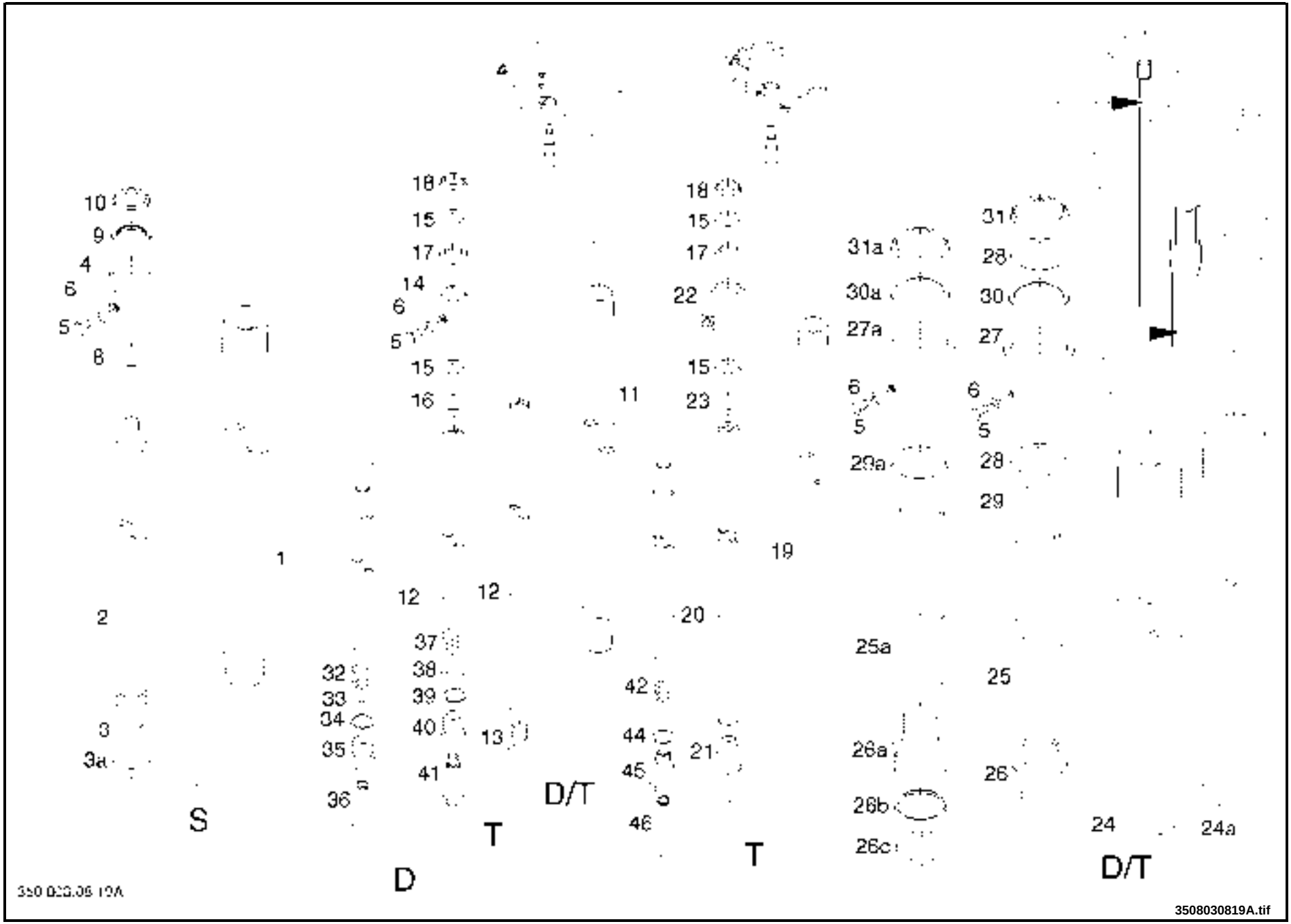

08

https://truckmanualshub.com/

LIFT CYLINDER FOR MAST LIFT TYPE 180

Pos.	Part-No.	I	Designation	Qantity	replaced by	Remarks
						S = standard **D = duplex** **T = triplex** **HH = lift height (mm)** **E = end-od-stroke damper (right**
	180 440 53 10	**2**	**lift cylinder assy. 1508 mm**	**2**		**S-HH 2850**
	180 440 53 11	**2**	**lift cylinder assy. 1558 mm**	**2**		**S-HH 2950**
	180 440 53 12	**2**	**lift cylinder assy. 1608 mm**	**2**		**S-HH 3050**
	180 440 53 13	**2**	**lift cylinder assy. 1658 mm**	**2**		**S-HH 3150**
	180 440 53 14	**2**	**lift cylinder assy. 1708 mm**	**2**		**S-HH 3250**
	180 440 53 15	**2**	**lift cylinder assy. 1758 mm**	**2**		**S-HH 3350**
	180 440 53 16	**2**	**lift cylinder assy. 1808 mm**	**2**		**S-HH 3450**
	180 440 53 17	**2**	**lift cylinder assy. 1858 mm**	**2**		**S-HH 3550**
	180 440 53 18	**2**	**lift cylinder assy. 1908 mm**	**2**		**S-HH 3650**
	180 440 53 19	**2**	**lift cylinder assy. 1958 mm**	**2**		**S-HH 3750**
	180 440 53 20	**2**	**lift cylinder assy. 2008 mm**	**2**		**S-HH 3850**
	180 440 53 21	**2**	**lift cylinder assy. 2058 mm**	**2**		**S-HH 3950**
	180 440 53 22	**2**	**lift cylinder assy. 2108 mm**	**2**		**S-HH 4050**
	180 440 53 23	**2**	**lift cylinder assy. 2158 mm**	**2**		**S-HH 4150**
	180 440 53 24	**2**	**lift cylinder assy. 2208 mm**	**2**		**S-HH 4250**
	180 440 53 25	**2**	**lift cylinder assy. 2258 mm**	**2**		**S-HH 4350**
	180 440 53 26	**2**	**lift cylinder assy. 2308 mm**	**2**		**S-HH 4450**
	180 440 53 27	**2**	**lift cylinder assy. 2358 mm**	**2**		**S-HH 4550**
	180 440 53 28	**2**	**lift cylinder assy. 2408 mm**	**2**		**S-HH 4650**
	180 440 53 29	**2**	**lift cylinder assy. 2458 mm**	**2**		**S-HH 4750**
	180 440 53 30	**2**	**lift cylinder assy. 2508 mm**	**2**		**S-HH 4850**
	180 440 53 31	**2**	**lift cylinder assy. 2558 mm**	**2**		**S-HH 4950**
	180 440 53 32	**2**	**lift cylinder assy. 2608 mm**	**2**		**S-HH 5050**
	180 440 53 33	**2**	**lift cylinder assy. 2658 mm**	**2**		**S-HH 5150**

1 = Packaged quantities **2 = Restricted availability** **3 = Parts being phased out** **4 = not available individually** **5 = see separate list**

https://truckmanualshub.com/

LIFT CYLINDER FOR MAST LIFT TYPE 180

Pos.	Part-No.	I	Designation	Qantity	replaced by	Remarks
	180 440 53 34	2	lift cylinder assy. 2708 mm	2		S-HH 5250
	180 440 53 35	2	lift cylinder assy. 2758 mm	2		S-HH 5350
	180 440 53 36	2	lift cylinder assy. 2808 mm	2		S-HH 5450
	180 440 53 37	2	lift cylinder assy. 2858 mm	2		S-HH 5550
	180 440 53 38	2	lift cylinder assy. 2908 mm	2		S-HH 5650
	180 440 53 39	2	lift cylinder assy. 3058 mm	2		S-HH 5950
	180 440 53 40	2	lift cylinder assy. 3308 mm	2		S-HH 6450
1	180 446 59 20	2	cylinder pipe 1483,5 mm	2		for 180.440.53.10
1	180 446 59 21	2	cylinder pipe 1533,5 mm	2		for 180.440.53.11
1	180 446 59 22	2	cylinder pipe 1583,5 mm	2		for 180.440.53.12
1	180 446 59 23	2	cylinder pipe 1633,5 mm	2		for 180.440.53.13
1	180 446 59 24	2	cylinder pipe	2		for 180.440.53.14
1	180 446 59 25	2	cylinder pipe 1733,5 mm	2		for 180.440.53.15
1	180 446 59 26	2	cylinder pipe 1783,5 mm	2		for 180.440.53.16
1	180 446 59 27	2	cylinder pipe 1833,5 mm	2		for 180.440.53.17
1	180 446 59 28	2	cylinder pipe 1883,5 mm	2		for 180.440.53.18
1	180 446 59 29	2	cylinder pipe 1933,5 mm	2		for 180.440.53.19
1	180 446 59 30	2	cylinder pipe 1983,5 mm	2		for 180.440.53.20
1	180 446 59 31	2	cylinder pipe 2033,5 mm	2		for 180.440.53.21
1	180 446 59 32	2	cylinder pipe 2083,5 mm	2		for 180.440.53.22
1	180 446 59 33	2	cylinder pipe 2133,5 mm	2		for 180.440.53.24
1	180 446 59 34	2	cylinder pipe 2183,5 mm	2		for 180.440.53.25
1	180 446 59 35	2	cylinder pipe 2233,5 mm	2		for 180.440.53.26
1	180 446 59 36	2	cylinder pipe 2283,5 mm	2		for 180.440.53.28
1	180 446 59 37	2	cylinder pipe 2333,5 mm	2		for 180.440.53.29
1	180 446 59 38	2	cylinder pipe 2383,5 mm	2		for 180.440.53.28
1	180 446 59 39	2	cylinder pipe 2433,5 mm	2		for 180.440.53.29

1 = Packaged quantities 2 = Restricted availability 3 = Parts being phased out 4 = not available individually 5 = see separate list

https://truckmanualshub.com/

LIFT CYLINDER FOR MAST LIFT TYPE 180

Pos.	Part-No.	I	Designation	Qantity	replaced by	Remarks
1	180 446 59 40	2	cylinder pipe 2483,5 mm	2		for 180.440.53.30
1	180 446 59 41	2	cylinder pipe 2533,5 mm	2		for 180.440.53.31
1	180 446 59 42	2	cylinder pipe 2583,5 mm	2		for 180.440.53.32
1	180 446 59 43	2	cylinder pipe 2633,5 mm	2		for 180.440.53.33
1	180 446 59 44	2	cylinder pipe 2683,5 mm	2		for 180.440.53.34
1	180 446 59 45	2	cylinder pipe 2733,5 mm	2		for 180.440.53.35
1	180 446 59 46	2	cylinder pipe 2783,5 mm	2		for 180.440.53.36
1	180 446 59 47	2	cylinder pipe 2833,5 mm	2		for 180.440.53.37
1	180 446 59 48	2	cylinder pipe 2883,5 mm	2		for 180.440.53.38
1	180 446 59 49	2	cylinder pipe 3033,5 mm	2		for 180.440.53.39
1	180 446 59 50	2	cylinder pipe 3283,5 mm	2		for 180.440.53.40
2	180 447 00 00	2	rod piston 1520,5 mm	2		for 180.440.53.10
2	180 447 00 01	2	rod piston 1570,5 mm	2		for 180.440.53.11
2	180 447 00 02	2	rod piston 1620,5 mm	2		for 180.440.53.12
2	180 447 00 03	2	rod piston 1670,5 mm	2		for 180.440.53.13
2	180 447 00 04	2	rod piston 1720,5 mm	2		for 180.440.53.14
2	180 447 00 05	2	rod piston 1770,5 mm	2		for 180.440.53.15
2	180 447 00 06	2	rod piston 1820,5 mm	2		for 180.440.53.16
2	180 447 00 07	2	rod piston 1870,5 mm	2		for 180.440.53.17
2	180 447 00 08	2	rod piston 1920,5 mm	2		for 180.440.53.18
2	180 447 00 09	2	rod piston 1970,5 mm	2		for 180.440.53.19
2	180 447 00 10	2	rod piston 2020,5 mm	2		for 180.440.53.20
2	180 447 00 11	2	rod piston 2070,5 mm	2		for 180.440.53.21
2	180 447 00 12	2	rod piston 2120,5 mm	2		for 180.440.53.22
2	180 447 00 13	2	rod piston 2170,5 mm	2		for 180.440.53.24
2	180 447 00 14	2	rod piston 2220,5 mm	2		for 180.440.53.25
2	180 447 00 15	2	rod piston 2270,5 mm	2		for 180.440.53.26

1 = Packaged quantities 2 = Restricted availability 3 = Parts being phased out 4 = not available individually 5 = see separate list

https://truckmanualshub.com/

LIFT CYLINDER FOR MAST LIFT TYPE 180

Pos.	Part-No.	I	Designation	Qantity	replaced by	Remarks
2	180 447 00 16	2	rod piston 2320,5 mm	2		for 180.440.53.28
2	180 447 00 17	2	rod piston 2370,5 mm	2		for 180.440.53.29
2	180 447 00 18	2	rod piston 2420,5 mm	2		for 180.440.53.28
2	180 447 00 19	2	rod piston 2470,5 mm	2		for 180.440.53.29
2	180 447 00 20	2	rod piston 2520,5 mm	2		for 180.440.53.30
2	180 447 00 21	2	rod piston 2570,5 mm	2		for 180.440.53.31
2	180 447 00 22	2	rod piston 2620,5 mm	2		for 180.440.53.32
2	180 447 00 23	2	rod piston 2670,5 mm	2		for 180.440.53.33
2	180 447 00 24	2	rod piston 2720,5 mm	2		for 180.440.53.34
2	180 447 00 25	2	rod piston 2770,5 mm	2		for 180.440.53.35
2	180 447 00 26	2	rod piston 2820,5 mm	2		for 180.440.53.36
2	180 447 00 27	2	rod piston 2870,5 mm	2		for 180.440.53.37
2	180 447 00 28	2	rod piston 2920,5 mm	2		for 180.440.53.38
2	180 447 00 29	2	rod piston 3070,5 mm	2		for 180.440.53.39
2	180 447 00 30	2	rod piston 3320,5 mm	2		for 180.440.53.40
3	000 907 01 14		ring snap	2		
3a	000 915 90 16		ring	2		
4	180 446 41 09		cylinder head	2		= pos. 4-10 Loctite nr. 243
5	002 903 02 00		screw plug	2		
6	117 446 27 01	3	seal ring A6x10-Cu	2	9 636 801 037	
6	9 636 801 037		seal ring DIN 7603 A6X10-Cu	2		
	000 960 80 78	3	set of seal assy.	1	000 960 80 91	= pos. 8-10
	000 960 80 91		set of seal assy.	1		= pos. 8-10
8	000 963 24 33		o-ring 44,2x2,5-P70	2		
9	000 962 19 76	3	grooved ring	2	000 962 19 80	
9	000 962 19 80		grooved ring 37-47-7,3	2		

1 = Packaged quantities 2 = Restricted availability 3 = Parts being phased out 4 = not available individually 5 = see separate list

https://truckmanualshub.com/

LIFT CYLINDER FOR MAST LIFT TYPE 180

Pos.	Part-No.	I	Designation	Qantity	replaced by	Remarks
10	000 962 25 61		wiper ring	2	000 962 26 55	
10	000 962 26 55		wiper 37x45x4/7	2		
	180 440 62 08	2	lift cylinder assy. 1345 mm	1		D-HH 2770
	180 440 17 00	2	lift cylinder assy. 1345 mm	1		D-HH 2770 E
	180 440 52 11	2	lift cylinder assy. 1601 mm	1		D-HH 3070
	180 440 52 01	2	lift cylinder assy. 1690,5 mm	1		D-HH 3070 E
	180 440 52 13	2	lift cylinder assy. 1701 mm	1		D-HH 3270
	180 440 52 03	2	lift cylinder assy. 1790,5 mm	1		D-HH 3270 E
	180 440 52 16	2	lift cylinder assy. 1851 mm	1		D-HH 3570
	180 440 52 06	2	lift cylinder assy. 1940,5 mm	1		D-HH 3570 E
	180 440 52 18	2	lift cylinder assy. 1951 mm	1		D-HH 3770
	180 440 52 08	2	lift cylinder assy. 2040,5 mm	1		D-HH 3770 E
	180 440 62 80	2	lift cylinder assy. 1422,5 mm	1		T-HH 4020
	180 440 62 60	2	lift cylinder assy. 1422,5 mm	1		T-HH 4020 E
	180 440 62 81	2	lift cylinder assy. 1472,5 mm	1		T-HH 4170
	180 440 62 61	2	lift cylinder assy. 1472,5 mm	1		T-HH 4170 E
	180 440 62 83	2	lift cylinder assy. 1572,5 mm	1		T-HH 4470
	180 440 62 63	2	lift cylinder assy. 1572,5 mm	1		T-HH 4470 E
	180 440 62 84	2	lift cylinder assy. 1622,5 mm	1		T-HH 4620
	180 440 62 64	2	lift cylinder assy. 1622,5 mm	1		T-HH 4620 E
	180 440 62 85	2	lift cylinder assy. 1672,5 mm	1		T-HH 4770
	180 440 62 65	2	lift cylinder assy. 1672,5 mm	1		T-HH 4770 E
	180 440 62 88	2	lift cylinder assy. 1822,5 mm	1		T-HH 5220
	180 440 62 68	2	lift cylinder assy. 1822,5 mm	1		T-HH 5220 E
	180 440 62 10	2	lift cylinder assy. 1972,5 mm	1		T-HH 5470
	180 440 62 00	2	lift cylinder assy. 1972,5 mm	1		T-HH 5470 E
	180 440 62 11	2	lift cylinder assy. 2022,5 mm	1		T-HH 5620

1 = Packaged quantities 2 = Restricted availability 3 = Parts being phased out 4 = not available individually 5 = see separate list

https://truckmanualshub.com/

LIFT CYLINDER FOR MAST LIFT TYPE 180

Pos.	Part-No.	I	Designation	Qantity	replaced by	Remarks
	180 440 62 01	2	lift cylinder assy. 2022,5 mm	1		T-HH 5620 E
	180 440 62 13	2	lift cylinder assy. 2122,5 mm	1		T-HH 5920
	180 440 62 03	2	lift cylinder assy. 2122,5 mm	1		T-HH 5920 E
	180 440 62 15	2	lift cylinder assy. 2222,5 mm	1		T-HH 6220
	180 440 62 05	2	lift cylinder assy. 2222,5 mm	1		T-HH 6220 E
11	180 446 59 19	2	cylinder pipe 1351 mm	1		for 180.440.62.80
11	180 446 59 14	2	cylinder pipe	1		for 180.440.62.08 180.440.17.00 180.440.62.81
11	180 446 59 15	2	cylinder pipe 1451 mm	1		for 180.440.62.09 180.440.17.01 180.440.62.82
11	180 446 59 08	2	cylinder pipe 1501 mm	1		for 180.440.52.10 180.440.17.02 180.440.62.83
11	180 446 59 00	2	cylinder pipe 1551 mm	1		for 180.440.52.11 180.440.52.01 180.440.62.84
11	180 446 59 01	2	cylinder pipe 1601 mm	1		for 180.440.52.12 180.440.52.02 180.440.62.85
11	180 446 59 02	2	cylinder pipe 1651 mm	1		for 180.440.52.13 180.440.52.03 180.440.62.86
11	180 446 59 03	2	cylinder pipe 1701 mm	1		for 180.440.52.14 180.440.52.04 180.440.62.87
11	180 446 59 04	2	cylinder pipe 1751 mm	1		for 180.440.52.15 180.440.52.05 180.440.62.88
11	180 446 59 05	2	cylinder pipe 1801 mm	1		for 180.440.52.16 180.440.52.06 180.440.62.10 180.440.62.89

1 = Packaged quantities 2 = Restricted availability 3 = Parts being phased out 4 = not available individually 5 = see separate list

https://truckmanualshub.com/

LIFT CYLINDER FOR MAST LIFT TYPE 180

Pos.	Part-No.	I	Designation	Qantity	replaced by	Remarks
11	180 446 59 06	2	cylinder pipe 1851 mm	1		for 180.440.52.17 180.440.52.07 180.440.62.11
11	180 446 59 07	2	cylinder pipe 1901 mm	1		for 180.440.52.18 180.440.52.08 180.440.62.12
11	180 446 59 09	2	cylinder pipe 1951 mm	1		for 180.440.52.19 180.440.17.03 180.440.62.13
11	180 446 59 10	2	cylinder pipe 2001 mm	1		for 180.440.52.20 180.440.17.04 180.440.62.14
11	180 446 59 11	2	cylinder pipe 2051 mm	1		for 180.440.52.21 180.440.17.05 180.440.62.15
11	180 446 59 12	2	cylinder pipe 2101 mm	1		for 180.440.52.22 180.440.17.06 180.440.62.16
11	180 446 59 13	2	cylinder pipe 2151 mm	1		for 180.440.62.17
11	180 446 58 33	2	piston barrel	1		for 180.440.62.60
11	180 446 58 34	2	piston barrel 1401 mm	1		for 180.440.62.61
11	180 446 58 35	2	piston barrel 1451 mm	1		for 180.440.62.62
11	180 440 54 17	2	pipe cylinder assy. 1501 mm	1		for 180.440.62.63
11	180 440 54 18	2	pipe cylinder assy. 1551 mm	1		for 180.440.62.64
11	180 440 54 19	2	pipe cylinder assy. 1601 mm	1		for 180.440.62.65
11	180 440 54 20	2	pipe cylinder assy. 1651 mm	1		for 180.440.62.66
11	180 440 54 21	2	pipe cylinder assy. 1701 mm	1		for 180.440.62.67
11	180 440 54 22	2	pipe cylinder assy. 1751 mm	1		for 180.440.62.68
11	180 440 54 23	2	pipe cylinder assy. 1801 mm	1		for 180.440.62.69 180.440.62.00
11	180 440 54 24	2	pipe cylinder assy. 1851 mm	1		for 180.440.62.01
11	180 440 54 25	2	pipe cylinder assy. 1901 mm	1		for 180.440.62.02

1 = Packaged quantities 2 = Restricted availability 3 = Parts being phased out 4 = not available individually 5 = see separate list

https://truckmanualshub.com/

LIFT CYLINDER FOR MAST LIFT TYPE 180

Pos.	Part-No.	I	Designation	Qantity	replaced by	Remarks
11	180 440 54 26	2	pipe cylinder assy. 1951 mm	1		for 180.440.62.03
11	180 440 54 27	2	pipe cylinder assy. 2001 mm	1		for 180.440.62.04
11	180 440 54 28	2	pipe cylinder assy. 2051 mm	1		for 180.440.62.05
11	180 440 54 29	2	pipe cylinder assy. 2101 mm	1		for 180.440.62.06
11	180 440 54 30	2	pipe cylinder assy. 2151 mm	1		for 180.440.62.07
12	180 446 58 22	2	piston barrel 1395,0 mm	1		for 180.440.62.08 180.440.62.80
12	180 446 58 23	2	piston barrel 1445,0 mm	1		for 180.440.62.09 180.440.62.81
12	180 446 48 94	2	piston barrel 1495,0 mm	1		for 180.440.52.10 180.440.62.82
12	180 446 48 95	2	piston barrel	1		for 180.440.52.11 180.440.62.83
12	180 446 48 96	2	piston barrel 1595,0 mm	1		for 180.440.52.12 180.440.62.84
12	180 446 48 97	2	piston barrel	1		for 180.440.52.13 180.440.62.85
12	180 446 48 98	2	piston barrel 1695,0 mm	1		for 180.440.52.14 180.440.62.86
12	180 446 48 99	2	piston barrel 1745,0 mm	1		for 180.440.52.15 180.440.62.87
12	180 446 58 00	2	piston barrel 1795,0 mm	1		for 180.440.52.16
12	180 446 58 01	2	piston barrel 1845,0 mm	1		for 180.440.52.17
12	180 446 58 02	2	piston barrel 1895,0 mm	1		for 180.440.52.18
12	180 446 58 03	2	piston barrel 1945,0 mm	1		for 180.440.52.19
12	180 446 58 04	2	piston barrel 1995,0 mm	1		for 180.440.52.20
12	180 446 58 05	2	piston barrel 2045,0 mm	1		for 180.440.52.21
12	180 446 58 06	2	piston barrel	1		for 180.440.52.22
12	180 446 58 00	2	piston barrel 1795,0 mm	1		for 180.440.62.88
12	180 446 58 01	2	piston barrel 1845,0 mm	1		for 180.440.62.89

1 = Packaged quantities 2 = Restricted availability 3 = Parts being phased out 4 = not available individually 5 = see separate list

https://truckmanualshub.com/

LIFT CYLINDER FOR MAST LIFT TYPE 180

Pos.	Part-No.	I	Designation	Qantity	replaced by	Remarks
12	180 446 58 03	2	piston barrel 1945,0 mm	1		for 180.440.62.10
12	180 446 58 04	2	piston barrel 1995,0 mm	1		for 180.440.62.11
12	180 446 58 05	2	piston barrel 2045,0 mm	1		for 180.440.62.12
12	180 446 58 06	2	piston barrel	1		for 180.440.62.13
12	180 446 58 07	2	piston barrel 2145,0 mm	1		for 180.440.62.14
12	180 446 58 08	2	piston barrel 1495,0 mm	1		for 180.440.62.62
12	180 446 58 09	2	piston barrel 1545,0 mm	1		for 180.440.62.63
12	180 446 58 10	2	piston barrel 1595,0 mm	1		for 180.440.62.64
12	180 446 58 11	2	piston barrel 1645,0 mm	1		for 180.440.62.65
12	180 446 58 12	2	piston barrel 1695,0 mm	1		for 180.440.62.66
12	180 446 58 13	2	piston barrel 1745,0 mm	1		for 180.440.62.67
12	180 446 58 14	2	piston barrel 1795,0 mm	1		for 180.440.62.68
12	180 446 58 15	2	piston barrel 1845,0 mm	1		for 180.440.62.69
12	180 446 58 17	2	piston barrel 1945,0 mm	1		for 180.440.62.00
12	180 446 58 18	2	piston barrel 1995,0 mm	1		for 180.440.62.01
12	180 446 58 19	2	piston barrel 2045,0 mm	1		for 180.440.62.02
12	180 446 58 20	2	piston barrel 2095,0 mm	1		for 180.440.62.03
12	180 446 58 21	2	piston barrel 2145,0 mm	1		for 180.440.62.04
12	180 446 58 30	2	piston barrel 2195,0 mm	1		for 180.440.62.15
12	180 446 58 31	2	piston barrel 2245,0 mm	1		for 180.440.62.16
12	180 446 58 32	2	piston barrel 2295,0 mm	1		for 180.440.62.17
12	180 446 58 36	2	piston barrel 1395,0 mm	1		for 180.440.62.60
12	180 446 58 37	2	piston barrel 1445,0 mm	1		for 180.440.62.61
12	180 446 58 38	2	piston barrel 2245,0 mm	1		for 180.440.62.07
12	180 446 58 39	2	piston barrel 2295,0 mm	1		for 180.440.62.06
12	180 446 58 40	2	piston barrel 2195,0 mm	1		for 180.440.62.05
12	180 446 03 46	2	rod piston 1484,5 mm	1		for 180.440.17.00

1 = Packaged quantities 2 = Restricted availability 3 = Parts being phased out 4 = not available individually 5 = see separate list

https://truckmanualshub.com/

LIFT CYLINDER FOR MAST LIFT TYPE 180

Pos.	Part-No.	I	Designation	Qantity	replaced by	Remarks
12	180 446 03 47	2	rod piston 1534,5 mm	1		for 180.440.17.01
12	180 446 03 48	2	rod piston 1584,5 mm	1		for 180.440.17.02
12	180 446 03 34	2	rod piston 1634,5 mm	1		for 180.440.52.01
12	180 446 03 35	2	rod piston 1684,5 mm	1		for 180.440.52.02
12	180 446 03 36	2	rod piston 1734,5 mm	1		for 180.440.52.03
12	180 446 03 37	2	rod piston 1784,5 mm	1		for 180.440.52.04
12	180 446 03 38	2	rod piston 1834,5 mm	1		for 180.440.52.05
12	180 446 03 39	2	rod piston 1884,5 mm	1		for 180.440.52.06
12	180 446 03 40	2	rod piston 1934,5 mm	1		for 180.440.52.07
12	180 446 03 41	2	rod piston 1984,5 mm	1		for 180.440.52.08
12	180 446 03 42	2	rod piston 2034,5 mm	1		for 180.440.17.03
12	180 446 03 43	2	rod piston 2084,5 mm	1		for 180.440.17.04
12	180 446 03 44	2	rod piston 2134,5 mm	1		for 180.440.17.05
12	180 446 03 45	2	rod piston 2184,5 mm	1		for 180.440.17.06
13	180 446 12 12		cover piston	1		Loctite nr. 270
14	180 446 41 07		cylinder head	4		= Pos. 5,6,14-18 Loctite nr. 243
	000 960 80 71	3	set of seal assy.	1	000 960 80 79	= Pos. 15-18
	000 960 80 79		set of seal assy.	1		= Pos. 15-18
15	000 962 33 31		band rotating driving	4		
16	000 963 22 48		o-ring 34x2,3-P90	2		
17	000 962 20 05	3	ring	2	000 962 20 11	
17	000 962 20 11		seal ring grooved	2		
18	000 962 25 34		seal wiper	2		
	180 440 62 73	2	lift cylinder assy. 1402 mm	1		T-HH 4020
	180 440 62 76	2	lift cylinder assy. 1499 mm	1		T-HH 4020 E
	180 440 62 74	2	lift cylinder assy. 1452 mm	1		T-HH 4170

1 = Packaged quantities 2 = Restricted availability 3 = Parts being phased out 4 = not available individually 5 = see separate list

https://truckmanualshub.com/

LIFT CYLINDER FOR MAST LIFT TYPE 180

Pos.	Part-No.	I	Designation	Qantity	replaced by	Remarks
	180 440 62 77	2	lift cylinder assy. 1539 mm	1		T-HH 4170 E
	180 440 52 70	2	lift cylinder assy. 1552 mm	1		T-HH 4470
	180 440 52 50	2	lift cylinder assy. 1639 mm	1		T-HH 4470 E
	180 440 52 71	2	lift cylinder assy. 1602 mm	1		T-HH 4620
	180 440 52 51	2	lift cylinder assy. 1699 mm	1		T-HH 4620 E
	180 440 52 72	2	lift cylinder assy. 1652 mm	1		T-HH 4770
	180 440 52 52	2	lift cylinder assy. 1739 mm	1		T-HH 4770 E
	180 440 52 75	2	lift cylinder assy. 1802 mm	1		T-HH 5220
	180 440 52 55	2	lift cylinder assy. 1899 mm	1		T-HH 5220 E
	180 440 52 76	2	lift cylinder assy. 1852 mm	1		T-HH 5470
	180 440 52 56	2	lift cylinder assy. 1939 mm	1		T-HH 5470 E
	180 440 52 77	2	lift cylinder assy. 1902 mm	1		T-HH 5620
	180 440 52 57	2	lift cylinder assy. 1999 mm	1		T-HH 5620 E
	180 440 52 79	2	lift cylinder assy. 2002 mm	1		T-HH 5920
	180 440 52 59	2	lift cylinder assy. 2099 mm	1		T-HH 5920 E
	180 440 52 81	2	lift cylinder assy. 2102 mm	1		T-HH 6220
	180 440 52 61	2	lift cylinder assy. 2199 mm	1		T-HH 6220 E
19	180 446 01 99	2	cylinder pipe 1334 mm	a.req.		for 180.440.62.73 for 180.440.62.76
19	180 446 01 48	2	cylinder pipe	a.req.		for 180.440.62.74 for 180.440.62.77
19	180 446 01 49	2	cylinder pipe	a.req.		for 180.440.62.75 for 180.440.62.78
19	180 446 01 50	2	cylinder pipe	a.req.		for 180.440.52.50 for 180.440.52.70
19	180 446 01 51	2	cylinder pipe 1534 mm	a.req.		for 180.440.52.51 for 180.440.52.71
19	180 446 01 52	2	cylinder pipe 1584 mm	a.req.		for 180.440.52.52 for 180.440.52.72

1 = Packaged quantities 2 = Restricted availability 3 = Parts being phased out 4 = not available individually 5 = see separate list

https://truckmanualshub.com/

LIFT CYLINDER FOR MAST LIFT TYPE 180

Pos.	Part-No.	I	Designation	Qantity	replaced by	Remarks
19	180 446 01 53	2	cylinder pipe 1634 mm	a.req.		for 180.440.52.53 for 180.440.52.73
19	180 446 01 54	2	cylinder pipe 1684 mm	a.req.		for 180.440.52.54 for 180.440.52.74
19	180 446 01 55	2	cylinder pipe 1734 mm	a.req.		for 180.440.52.55 for 180.440.52.75
19	180 446 01 56	2	cylinder pipe 1784 mm	a.req.		for 180.440.52.56 for 180.440.52.76
19	180 446 01 57	2	cylinder pipe 1834 mm	a.req.		for 180.440.52.57 for 180.440.52.77
19	180 446 01 58	2	cylinder pipe 1884 mm	a.req.		for 180.440.52.58 for 180.440.52.78
19	180 446 01 59	2	cylinder pipe 1934 mm	a.req.		for 180.440.52.59 for 180.440.52.79
19	180 446 01 60	2	cylinder pipe 1984 mm	a.req.		for 180.440.52.60 for 180.440.52.80
19	180 446 01 61	2	cylinder pipe 2034 mm	a.req.		for 180.440.52.61 for 180.440.52.81
19	180 446 01 62	2	cylinder pipe 2084 mm	a.req.		for 180.440.52.62 for 180.440.52.82
20	180 446 00 96	2	rod piston	1		for 180.440.62.76
20	180 446 58 24	2	piston barrel 1345,5 mm	1		for 180.440.62.73
20	180 446 00 97	2	rod piston 1485 mm	1		for 180.440.62.77
20	180 446 58 25	2	piston barrel 1395,5 mm	1		for 180.440.62.74
20	180 446 00 98	2	rod piston 1535 mm	1		for 180.440.62.78
20	180 446 58 26	2	piston barrel 1445,5 mm	1		for 180.440.62.75
20	180 446 00 83	2	rod piston 1585 mm	1		for 180.440.52.50
20	180 446 48 65	2	piston barrel	1		for 180.440.52.70
20	180 446 00 84	2	rod piston	1		for 180.440.52.51
20	180 446 48 66	2	piston barrel	1		for 180.440.52.71
20	180 446 00 85	2	rod piston 1685 mm	1		for 180.440.52.52

1 = Packaged quantities 2 = Restricted availability 3 = Parts being phased out 4 = not available individually 5 = see separate list

https://truckmanualshub.com/

LIFT CYLINDER FOR MAST LIFT TYPE 180

Pos.	Part-No.	I	Designation	Qantity	replaced by	Remarks
20	180 446 48 67	2	piston barrel	1		for 180.440.52.72
20	180 446 00 86	2	rod piston	1		for 180.440.52.53
20	180 446 48 68	2	piston barrel	1		for 180.440.52.73
20	180 446 00 87	2	rod piston 1785 mm	1		for 180.440.52.54
20	180 446 48 69	2	piston barrel 1695,5 mm	1		for 180.440.52.74
20	180 446 00 88	2	rod piston	1		for 180.440.52.55
20	180 446 48 70	2	piston barrel	1		for 180.440.52.75
20	180 446 00 89	2	rod piston 1885 mm	1		for 180.440.52.56
20	180 446 48 71	2	piston barrel	1		for 180.440.52.76
20	180 446 00 90	2	rod piston 1935 mm	1		for 180.440.52.57
20	180 446 48 72	2	piston barrel 1845,5 mm	1		for 180.440.52.77
20	180 446 00 91	2	rod piston 1985 mm	1		for 180.440.52.58
20	180 446 48 73	2	piston barrel 1895,5 mm	1		for 180.440.52.78
20	180 446 48 74	2	piston barrel 1945,5 mm	1		for 180.440.52.79
20	180 446 00 93	2	rod piston 2085 mm	1		for 180.440.52.60
20	180 446 48 75	2	piston barrel 1995,5 mm	1		for 180.440.52.80
20	180 446 00 94	2	rod piston 2135 mm	1		for 180.440.52.61
20	180 446 48 76	2	piston barrel 2045,5 mm	1		for 180.440.52.81
20	180 446 00 95	2	rod piston 2185 mm	1		for 180.440.52.62
20	180 446 48 77	2	piston barrel 2095,5 mm	1		for 180.440.52.82
20	180 446 00 92	2	rod piston 2034 mm	1		for 180.440.52.59
21	180 446 12 08	3	piston cover	2	180 446 12 09	Loctite nr. 270 for 180.440.52.70 ... 52.82 / 62.73 ... 62.75
21	180 446 12 09		cover piston	2		Loctite nr. 270 for 180.440.52.70 ... 52.82 / 62.73 ... 62.75
22	180 446 41 05		cylinder head	2		Loctite nr. 243 for 180.440.52.50 ... 52.62 for 180.440.52.70 ... 52.82

1 = Packaged quantities 2 = Restricted availability 3 = Parts being phased out 4 = not available individually 5 = see separate list

https://truckmanualshub.com/

LIFT CYLINDER FOR MAST LIFT TYPE 180

Pos.	Part-No.	I	Designation	Qantity	replaced by	Remarks
	000 960 80 73	3	set of seal assy.	1	000 960 80 80	= pos. 15,17,18,23 for 180.440.52.50 ... 62 for 180.440.52.70 ... 82
	000 960 80 80		set of seal assy.	1		= pos. 15,17,18,23 for 180.440.52.50 ... 62 for 180.440.52.70 ... 82
23	000 963 23 33		o ring 37.77x2.65-P90	2		
	180 440 62 70	3	lift cylinder assy. 826,5 mm	1	180 440 17 85	D-HH 2770 T-HH 4020 including: duplex 1x 180.446.29.77, 1x 000.952.25.32, 1x 000.922.70.14 when re-work is done 180.808.94.07 triplex 1x 180.448.22.57, 1x 000.952.25.32, 1x 000.955.01.04, 1x 9.045.316.175, 1x 9.292.003.018 when re-work is done 180.808.94.08
	180 440 17 85	2	lift cylinder assy. 833,5mm	1		D-HH 2770 T-HH 4020
	180 440 62 71	3	lift cylinder assy. 851,5 mm	1	180 440 17 86	D-HH 2870 T-HH 4170 including: duplex 1x 180.446.29.78, 1x 000.952.25.32, 1x 000.922.70.14 when re-work is done 180.808.94.07 triplex 1x 180.448.22.58, 1x 000.952.25.32, 1x 000.955.01.04, 1x 9.045.316.175, 1x 9.292.003.018 when re-work is done 180.808.94.08
	180 440 17 86	2	lift cylinder assy. 858,5mm	1		D-HH 2870 T-HH 4170

1 = Packaged quantities 2 = Restricted availability 3 = Parts being phased out 4 = not available individually 5 = see separate list

https://truckmanualshub.com/

LIFT CYLINDER FOR MAST LIFT TYPE 180

Pos.	Part-No.	I	Designation	Qantity	replaced by	Remarks
	180 440 52 85	3	lift cylinder assy. 901,5 mm	1	180 440 17 88	D-HH 3070 T-HH 4470 including: duplex 1x 180.446.29.80, 1x 000.952.25.32, 1x 000.922.70.14 when re-work is done 180.808.94.07 triplex 1x 180.448.22.60, 1x 000.952.25.32, 1x 000.955.01.04, 1x 9.045.316.175, 1x 9.292.003.018 when re-work is done 180.808.94.08
	180 440 17 88	2	lift cylinder assy. 908,5 mm	1		D-HH 3070 T-HH 4470
	180 440 52 86	3	lift cylinder assy. 926,5 mm	1	180 440 17 89	D-HH 3170 T-HH 4620 including: duplex 1x 180.446.29.81, 1x 000.952.25.32, 1x 000.922.70.14 when re-work is done 180.808.94.07 triplex 1x 180.448.22.61, 1x 000.952.25.32, 1x 000.955.01.04, 1x 9.045.316.175, 1x 9.292.003.018 when re-work is done 180.808.94.08
	180 440 17 89	2	lift cylinder assy. 933,5 mm	1		D-HH 3170 T-HH 4620
	180 440 52 87	3	lift cylinder assy. 951,5 mm	1	180 440 17 90	D-HH 3270 T-HH 4770 including: duplex 1x 180.446.29.82, 1x 000.952.25.32, 1x 000.922.70.14 when re-work is done 180.808.94.07 triplex 1x 180.448.22.62, 1x 000.952.25.32, 1x 000.955.01.04, 1x 9.045.316.175, 1x 9.292.003.018 when re-work is done 180.808.94.08
	180 440 17 90	2	lift cylinder assy. 958,5 mm	1		D-HH 3270 T-HH 4770

1 = Packaged quantities 2 = Restricted availability 3 = Parts being phased out 4 = not available individually 5 = see separate list

https://truckmanualshub.com/

LIFT CYLINDER FOR MAST LIFT TYPE 180

Pos.	Part-No.	I	Designation	Qantity	replaced by	Remarks
	180 440 52 90	3	lift cylinder assy. 1026,5 mm	1	180 440 17 93	D-HH 3570 T-HH 5220 including: duplex 1x 180.446.29.85, 1x 000.952.25.32, 1x 000.922.70.14 when re-work is done 180.808.94.07 triplex 1x 180.448.22.65, 1x 000.952.25.32, 1x 000.955.01.04, 1x 9.045.316.175, 1x 9.292.003.018 when re-work is done 180.808.94.08
	180 440 17 93	2	lift cylinder assy. 1033,5 mm	1		D-HH 3570 T-HH 5220
	180 440 52 92	3	lift cylinder assy. 1076,5 mm	1	180 440 17 95	D-HH 3770 including: duplex 1x 180.446.29.87, 1x 000.952.25.32, 1x 000.922.70.14 when re-work is done 180.808.94.07
	180 440 17 95	2	lift cylinder assy. 1083,5 mm	1		D-HH 3770
	180 440 52 93	3	lift cylinder assy. 1101,5 mm	1	180 440 17 96	T-HH 5470 including: triplex 1x 180.448.22.68, 1x 000.952.25.32, 1x 000.955.01.04, 1x 9.045.316.175, 1x 9.292.003.018 when re-work is done 180.808.94.08
	180 440 17 96	2	lift cylinder assy. 1108,5 mm	1		T-HH 5470
	180 440 52 94	3	lift cylinder assy. 1126,5 mm	1	180 440 17 97	T-HH 5620 including: triplex 1x 180.448.22.69, 1x 000.952.25.32, 1x 000.955.01.04, 1x 9.045.316.175, 1x 9.292.003.018 when re-work is done 180.808.94.08
	180 440 17 97	2	lift cylinder assy. 1133,5 mm	1		T-HH 5620

1 = Packaged quantities 2 = Restricted availability 3 = Parts being phased out 4 = not available individually 5 = see separate list

https://truckmanualshub.com/

LIFT CYLINDER FOR MAST LIFT TYPE 180

Pos.	Part-No.	I	Designation	Qantity	replaced by	Remarks
	180 440 52 96	3	lift cylinder assy. 1174,5 mm	1	180 440 17 99	T-HH 5920 including: triplex 1x 180.448.22.71, 1x 000.952.25.32, 1x 000.955.01.04, 1x 9.045.316.175, 1x 9.292.003.018 when re-work is done 180.808.94.08
	180 440 17 99	2	lift cylinder assy. 1183,5 mm	1		T-HH 5920
	180 440 52 98	3	lift cylinder assy. 1226,5 mm	1	180 440 62 36	T-HH 6220 including: triplex 1x 180.448.22.73, 1x 000.952.25.32, 1x 000.955.01.04, 1x 9.045.316.175, 1x 9.292.003.018 when re-work is done 180.808.94.08
	180 440 62 36	2	lift cylinder assy. 1233,5 mm	1		T-HH 6220
24	180 446 59 16	3	cylinder pipe 743,5 mm	1	180 440 17 85	for 180.440.62.70
24	180 446 59 17	3	cylinder pipe 768,5 mm	1	180 446 17 86	for 180.440.62.71
24	180 446 59 18	3	cylinder pipe 793,5 mm	1	180 446 17 87	for 180.440.62.72
24	180 446 01 83	3	cylinder pipe 818,5 mm	1	180 440 17 88	for 180.440.52.85
24	180 446 01 84	3	cylinder pipe 843,5 mm	1	180 440 17 89	for 180.440.52.86
24	180 446 01 85	3	cylinder pipe 868,5 mm	1	180 440 17 90	for 180.440.52.87
24	180 446 01 86	3	cylinder pipe 893,5 mm	1	180 440 17 91	for 180.440.52.88
24	180 446 01 87	3	cylinder pipe 918,5 mm	1	180 440 17 92	for 180.440.52.89
24	180 446 01 88	3	cylinder pipe 943,5 mm	1	180 440 17 93	for 180.440.52.90
24	180 446 01 89	3	cylinder pipe 968,5 mm	1	180 440 17 94	for 180.440.52.91
24	180 446 01 90	3	cylinder pipe 993,5 mm	1	180 440 17 95	for 180.440.52.92
24	180 446 01 91	3	cylinder pipe 1018,5 mm	1	180 440 17 96	for 180.440.52.93
24	180 446 01 92	3	cylinder pipe 1043,5 mm	1	180 440 17 97	for 180.440.52.94
24	180 446 01 93	3	cylinder pipe 1068,5 mm	1	180 440 17 98	for 180.440.52.95
24	180 446 01 94	3	cylinder pipe 1093,5 mm	1	180 440 17 99	for 180.440.52.96
24	180 446 01 95	3	cylinder pipe 1118,5 mm	1	180 440 62 35	for 180.440.52.97

1 = Packaged quantities 2 = Restricted availability 3 = Parts being phased out 4 = not available individually 5 = see separate list

https://truckmanualshub.com/

LIFT CYLINDER FOR MAST LIFT TYPE 180

Pos.	Part-No.	I	Designation	Qantity	replaced by	Remarks
24	180 446 01 96	3	cylinder pipe 1143,5 mm	1	180 440 62 36	for 180.440.52.98
24	180 446 01 97	3	cylinder pipe 1168,5 mm	1	180 440 62 37	for 180.440.52.99
24	180 446 01 98	3	cylinder pipe 1193,5 mm	1	180 440 62 38	for 180.440.52.27
24a	180 446 59 51	2	cylinder pipe 768,5 mm	1		for 180.440.17.85
24a	180 446 59 52	2	cylinder pipe 793,5 mm	1		for 180.440.17.86
24a	180 446 59 53	2	cylinder pipe 818,5 mm	1		for 180.440.17.87
24a	180 446 59 54	2	cylinder pipe 843,5 mm	1		for 180.440.17.88
24a	180 446 59 55	2	cylinder pipe 868,5 mm	1		for 180.440.17.89
24a	180 446 59 56	2	cylinder pipe 893,5 mm	1		for 180.440.17.90
24a	180 446 59 57	2	cylinder pipe 918,5 mm	1		for 180.440.17.91
24a	180 446 59 58	2	cylinder pipe 943,5 mm	1		for 180.440.17.92
24a	180 446 59 59	2	cylinder pipe 968,5 mm	1		for 180.440.17.93
24a	180 446 59 60	2	cylinder pipe 993,5 mm	1		for 180.440.17.94
24a	180 446 59 61	2	cylinder pipe 1018,5 mm	1		for 180.440.17.95
24a	180 446 59 62	2	cylinder pipe 1043,5 mm	1		for 180.440.17.96
24a	180 446 59 63	2	cylinder pipe 1068,5 mm	1		for 180.440.17.97
24a	180 446 59 64	2	cylinder pipe 1093,5 mm	1		for 180.440.17.98
24a	180 446 59 65	2	cylinder pipe 1118,5 mm	1		for 180.440.17.99
24a	180 446 59 66	2	cylinder pipe 1143,5 mm	1		for 180.440.62.35
24a	180 446 59 67	2	cylinder pipe 1168,5 mm	1		for 180.440.62.36
24a	180 446 59 68	2	cylinder pipe 1193,5 mm	1		for 180.440.62.37
24a	180 446 59 69	2	cylinder pipe 1218,5 mm	1		for 180.440.62.38
25	180 446 58 27	3	piston barrel 773,5 mm	1	180 440 17 85	for 180.440.62.70
25	180 446 58 28	3	piston barrel 798,5 mm	1	180 446 17 86	for 180.440.62.71
25	180 446 58 29	3	piston barrel 823,5 mm	1	180 446 17 87	for 180.440.62.72
25	180 446 48 78	3	piston barrel	1	180 440 17 88	for 180.440.52.85
25	180 446 48 79	3	piston barrel 873,5 mm	1	180 440 17 89	for 180.440.52.86

1 = Packaged quantities 2 = Restricted availability 3 = Parts being phased out 4 = not available individually 5 = see separate list

https://truckmanualshub.com/

LIFT CYLINDER FOR MAST LIFT TYPE 180

Pos.	Part-No.	I	Designation	Qantity	replaced by	Remarks
25	180 446 48 80	3	piston barrel 898,5 mm	1	180 440 17 90	for 180.440.52.87
25	180 446 48 81	3	piston barrel 923,5 mm	1	180 440 17 91	for 180.440.52.88
25	180 446 48 82	3	piston barrel 948,5 mm	1	180 440 17 92	for 180.440.52.89
25	180 446 48 83	3	piston barrel 973,5 mm	1	180 440 17 93	for 180.440.52.90
25	180 446 48 84	3	piston barrel 998,5 mm	1	180 440 17 94	for 180.440.52.91
25	180 446 48 85	3	piston barrel 1023,5 mm	1	180 440 17 95	for 180.440.52.92
25	180 446 48 86	3	piston barrel 1048,5 mm	1	180 440 17 96	for 180.440.52.93
25	180 446 48 87	3	piston barrel 1073,5 mm	1	180 440 17 97	for 180.440.52.94
25	180 446 48 88	3	piston barrel 1098,5 mm	1	180 440 17 98	for 180.440.52.95
25	180 446 48 89	3	piston barrel 1123,5 mm	1	180 440 17 99	for 180.440.52.96
25	180 446 48 90	3	piston barrel 1148,5 mm	1	180 440 62 35	for 180.440.52.97
25	180 446 48 91	3	piston barrel 1173,5 mm	1	180 440 62 36	for 180.440.52.98
25	180 446 48 92	3	piston barrel 1198,5 mm	1	180 440 62 37	for 180.440.52.99
25	180 446 48 93	3	piston barrel 1293,5 mm	1	180 440 62 38	for 180.440.52.27
25a	180 447 00 31	2	rod piston 775,5 mm	1		for 180.440.17.85
25a	180 447 00 32	2	rod piston	1		for 180.440.17.86
25a	180 447 00 33	2	rod piston 825,5 mm	1		for 180.440.17.87
25a	180 447 00 34	2	piston rod	1		for 180.440.17.88
25a	180 447 00 35	2	rod piston 875,5 mm	1		for 180.440.17.89
25a	180 447 00 36	2	rod piston 900,5 mm	1		for 180.440.17.90
25a	180 447 00 37	2	piston rod	1		for 180.440.17.91
25a	180 447 00 38	2	rod piston 950,5 mm	1		for 180.440.17.92
25a	180 447 00 39	2	rod piston 975,5 mm	1		for 180.440.17.93
25a	180 447 00 40	2	rod piston 1000,5 mm	1		for 180.440.17.94
25a	180 447 00 41	2	rod piston 1025,5 mm	1		for 180.440.17.95
25a	180 447 00 42	2	rod piston 1050,5 mm	1		for 180.440.17.96
25a	180 447 00 43	2	rod piston 1075,5 mm	1		for 180.440.17.97

1 = Packaged quantities 2 = Restricted availability 3 = Parts being phased out 4 = not available individually 5 = see separate list

https://truckmanualshub.com/

LIFT CYLINDER FOR MAST LIFT TYPE 180

Pos.	Part-No.	I	Designation	Qantity	replaced by	Remarks
25a	180 447 00 44	2	rod piston 1100,5 mm	1		for 180.440.17.98
25a	180 447 00 45	2	rod piston 1125,5 mm	1		for 180.440.17.99
25a	180 447 00 46	2	rod piston 1150,5 mm	1		for 180.440.62.35
25a	180 447 00 47	2	rod piston 1175,5 mm	1		for 180.440.62.36
25a	180 447 00 48	2	rod piston 1200,5 mm	1		for 180.440.62.37
25a	180 447 00 49	2	rod piston 1225,5 mm	1		for 180.440.62.38
26	180 446 12 10		cover piston	1		for 180.440.52.85 ... 99.27 Loctite nr. 270
26a	180 446 12 14		cover piston	1		= Pos. 26a,26b,26c for 180.440.17.85...99; 180.440.62.35...38 Loctite nr. 270
26b	000 961 91 58		seal	1		
26c	000 962 33 33		band rotating driving 58x63x5.6	1		
27	180 446 41 06		cylinder head	1		= Pos. 27,28,29,30,31 for 180.440.52.85 ... 99.27 Loctite nr. 243
27a	180 446 41 13		cylinder head	1		= Pos. 27a,29a,30a,31a for 180.440.17.85...99; 180.440.62.35...38 Loctite nr. 243
	000 960 80 72	3	set of seal assy.	1	000 960 80 81	= Pos. 28,29,30,31 for 180.440.52.85 ... 99.27
	000 960 80 81		set of seal assy.	1		= Pos. 28,29,30,31 for 180.440.52.85 ... 99.27
	000 960 80 93		set of seal assy.	1		= Pos. 26b,26c,29a,30a,31a for 180.440.17.85...99; 180.440.62.35...38
28	000 962 33 30		band	2		
29	000 963 06 39		o ring	1		
29a	000 961 00 16		seal ring	1		
30	000 962 20 04	3	ring	1	000 962 20 12	

1 = Packaged quantities 2 = Restricted availability 3 = Parts being phased out 4 = not available individually 5 = see separate list

https://truckmanualshub.com/

LIFT CYLINDER FOR MAST LIFT TYPE 180

Pos.	Part-No.	I	Designation	Qantity	replaced by	Remarks
30	000 962 20 12		ring	1		
30a	000 962 20 12		ring	1		
31	000 962 25 33		ring	1		
31a	000 962 25 31		seal wiper	1		
32	000 921 90 36		spring compression	1		for 180.440.17.00 ... 17.06 for 180.440.52.01 ... 52.08
33	000 914 75 26		washer	1		for 180.440.17.00 ... 17.06 for 180.440.52.01 ... 52.08
34	000 907 50 09		snap ring 12x1	1		for 180.440.17.00 ... 17.06 for 180.440.52.01 ... 52.08
35	180 446 12 11		piston cover	1		for 180.440.17.00 ... 17.06 for 180.440.52.01 ... 52.08
36	180 446 11 00		piston	1		for 180.440.17.00 ... 17.06 for 180.440.52.01 ... 52.08
37	000 921 90 37		spring compression	1		for 180.440.62.60 ... 62.68 for 180.440.62.01 ... 62.06
38	000 914 75 28		washer	1		for 180.440.62.60 ... 62.68 for 180.440.62.01 ... 62.06
39	000 907 50 11		snap ring 15x1,2	1		for 180.440.62.60 ... 62.68 for 180.440.62.01 ... 62.06
40	180 446 12 13		cover piston	1		for 180.440.62.60 ... 62.68 for 180.440.62.01 ... 62.06
41	180 446 11 01		piston	1		for 180.440.62.60 ... 62.68 for 180.440.62.01 ... 62.06
42	000 921 90 36		spring compression	1		for 180.440.52.50 ... 52.62
44	000 907 50 09		snap ring 12x1	1		for 180.440.52.50 ... 52.62
45	180 446 12 09		cover piston	1		for 180.440.52.50 ... 52.62 / 62.76 ... 62.78
46	180 446 11 03		piston	1		for 180.440.52.50 ... 52.62

1 = Packaged quantities 2 = Restricted availability 3 = Parts being phased out 4 = not available individually 5 = see separate list

https://truckmanualshub.com/

AUXILIARY HYDRAULICS FOR STANDARD MAST TYPE 180

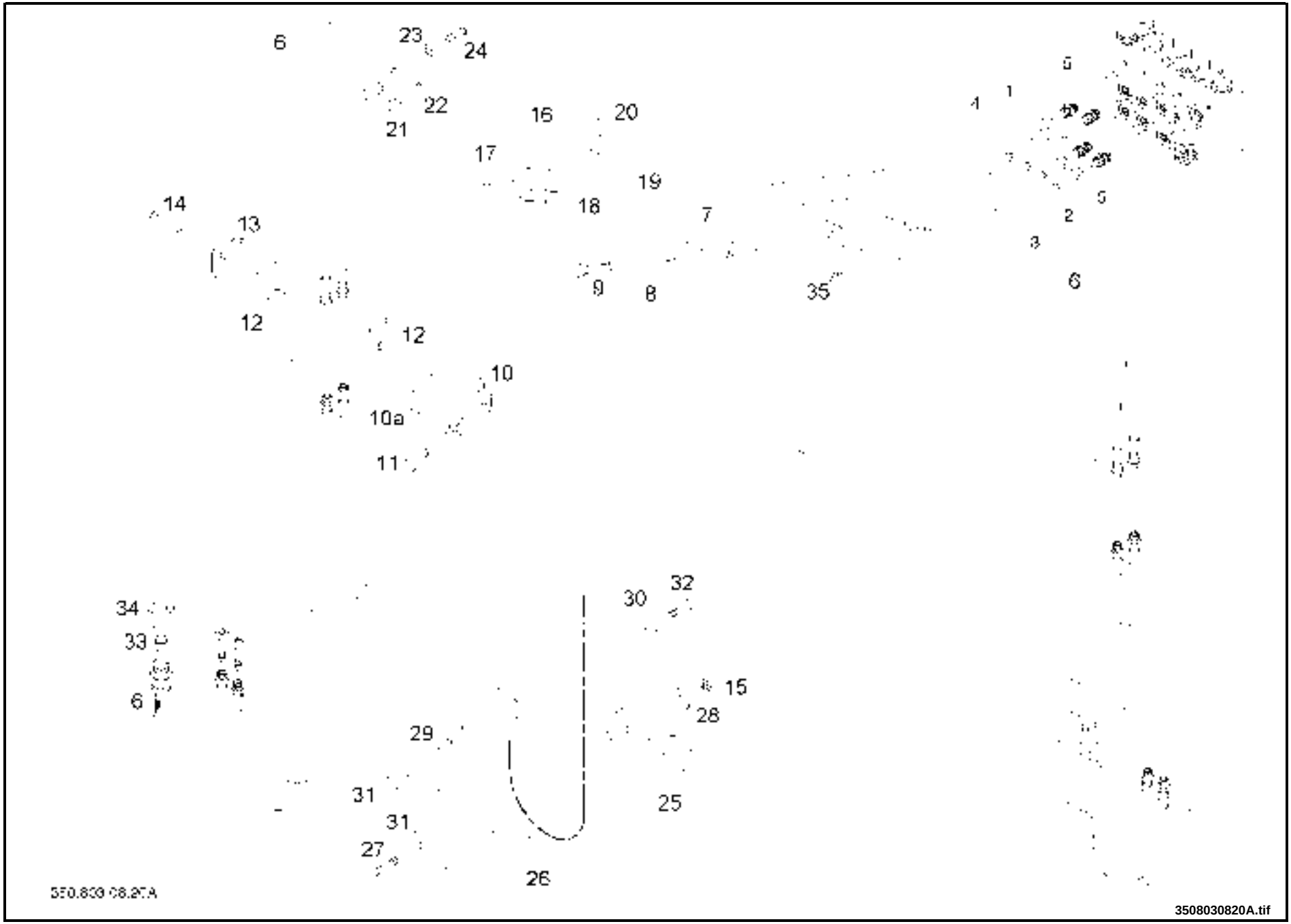

08

https://truckmanualshub.com/

AUXILIARY HYDRAULICS FOR STANDARD MAST TYPE 180

Pos.	Part-No.	I	Designation	Qantity	replaced by	Remarks
						NOTE! Quantities indicated in front of the stroke apply to single auxiliary hydraulic services. Quantities indicated behind of the stroke apply to double auxiliary hydraulic services. HH = lift height (mm)
1	350 448 35 30		hoseline	1/1		
2	350 448 35 31		hoseline	1/1		
3	350 448 35 33		hoseline	/1		
4	350 448 35 32		hoseline	/1		
5	9 721 002 062		pipe union ISO 8434-1 SDS-S12xM18x1,5-type E-A3C-V	2/4		
5	000 961 22 94	3	pipe union GE12LM18x1,5	2	000 951 24 11	by annex sideshift
5	000 951 24 11		pipe union GE12SMY8434-A3C-V80	2		by annex sideshift
	000 914 00 00		throttle 1x11,9	2		by annex sideshift
6	000 950 97 00		hoseline double 2503mm	1/2		HH 2850
6	000 950 97 01		hoseline double	1/2		HH 2950
6	000 950 97 02		double hose line 2693mm	1/2		HH 3050
6	000 950 97 03		hoseline double	1/2		HH 3150
6	000 950 97 04		double hose line 2893mm	1/2		HH 3250
6	000 950 97 05		hoseline double	1/2		HH 3350
6	000 950 97 06		double hose line 3083 mm	1/2		HH 3450
6	000 950 97 07		hoseline double	1/2		HH 3550
6	000 950 97 08		double hose line 3273mm	1/2		HH 3650
6	000 950 97 09		hose assembly	1/2		HH 3750
6	000 950 97 10		double hose line 3473mm	1/2		HH 3850
6	000 950 97 11		hose	1/2		HH 3950
6	000 950 97 12		hoseline double	1/2		HH 4050
6	000 950 97 13		hoseline double	1/2		HH 4150
6	000 950 97 14		double hose line 3863mm	1/2		HH 4250

1 = Packaged quantities 2 = Restricted availability 3 = Parts being phased out 4 = not available individually 5 = see separate list

https://truckmanualshub.com/

AUXILIARY HYDRAULICS FOR STANDARD MAST TYPE 180

Pos.	Part-No.	I	Designation	Qantity	replaced by	Remarks
6	000 950 97 15		hoseline double	1/2		HH 4350
6	000 950 97 16		double hose line 4058mm	1/2		HH 4450
6	000 950 97 17		hoseline double	1/2		HH 4550
6	000 950 97 18		hoseline double	1/2		HH 4650
6	000 950 97 19		hoseline double	1/2		HH 4750
6	000 950 97 20		double hose line 4453mm	1/2		HH 4850
6	000 950 97 21		hoseline double	1/2		HH 4950
6	000 950 97 22		hoseline double	1/2		HH 5050
6	000 950 97 23		hoseline double	1/2		HH 5150
6	000 950 97 24		double hose line 4848 mm	1/2		HH 5250
6	000 950 97 25		double hose line 4948 mm	1/2		HH 5350
6	000 950 97 26		hoseline double	1/2		HH 5450
6	000 950 97 27		hoseline double	1/2		HH 5550
6	000 950 97 28		double hose line 5248mm	1/2		HH 5650
6	000 950 97 29		double hose line 5548 mm	1/2		HH 5950
6	000 950 97 30		double hose line 6048 mm	1/2		HH 6450
7	000 955 08 01		clip DIN 3015 12 diam double	2/4		
8	000 955 15 01		cover plate DIN 3015-3 Z-DP-1-W1	2/4		
9	9 007 311 142	1	hexagon head bolt ISO 4014 M6x45-8.8-A2C	2/4		
10	180 440 77 22		support assy.	1/2		
10a	183 441 58 06		support	1/2		
11	9 045 316 183	1	socket-head screw ISO 4762 M8x25-8.8-A2C	1/2		
12	000 955 08 14		block clamp DIN 3015-3 Z-KP-2-R-18-18-PP	1/2		
13	000 955 15 00		cover plate DIN 3015-3 Z-DP-2-W1-A2C	1/2		
14	9 045 316 195	1	socket-head screw ISO 4762 M8x50-8.8-A2C	1/2		
15	9 210 281 110	1	nut ISO 4032 934-M8-8A2C	a.req.		
16	000 955 21 14		clip	4/8		HH 3750 |=>

1 = Packaged quantities 2 = Restricted availability 3 = Parts being phased out 4 = not available individually 5 = see separate list

https://truckmanualshub.com/

AUXILIARY HYDRAULICS FOR STANDARD MAST TYPE 180

Pos.	Part-No.	I	Designation	Qantity	replaced by	Remarks
				6/12		HH 4650 |=>
				8/16		HH 5650 |=>
17	000 918 71 11	3	retainer plate	2/4	000 918 71 22	HH 3750 |=>
				3/6		HH 4650 |=>
				4/8		HH 5650 |=>
17	000 918 71 22		retainer plate	2/4		HH 3750 |=>
				3/6		HH 4650 |=>
				4/8		HH 5650 |=>
18	9 294 003 018		washer DIN 433 DIN 433-8,4-ST50-A2C	a.req.		
19	9 045 316 183		socket-head screw ISO 4762 M8x25-8.8-A2C	a.req.		
20	000 964 19 62		edge protection A2-36X15	a.req.		
21	000 955 08 11		clip	1/2		
22	000 918 64 64		plate joining	1/2		
23	9 292 003 014	1	washer ISO 7089 A6,4-ST50-A2C	2/4		
24	9 045 316 138	1	socket-head screw ISO 4762 M6x35-8.8-A2C	2/4		
25	160 446 36 15		baffle	1/2		
26	180 441 19 03		plate	1/2		
27	9 124 311 188	1	stud DIN 939 DIN 939-M8X35-8.8A2C	2/4		
28	9 309 412 018	1	washer DIN 7349 DIN 7349-8.4x21x4,8A2C	2/4		
29	000 955 08 47		clamp block DIN 3015-3 Z-KP-2-R-17,2-17, 2-PP	1/2		
30	000 955 06 02		clip	1/2		
31	000 918 53 45		fishplate	2/4		annex fork carriage
31	000 918 53 45		fishplate	2/2		annex sideshift
32	9 008 311 193	1	hexagon head screw ISO 4017 M8x45-8.8-A2C	1/2		annex fork carriage
32	9 008 311 188		hexagon head screw ISO 4017 M8x35-8.8-A2C	/1		annex sideshift
33	000 952 70 11		plug pipe 12L/S-VKA-V80	2/4		
34	000 952 01 17		cap nut DIN 3870	2/4		

1 = Packaged quantities 2 = Restricted availability 3 = Parts being phased out 4 = not available individually 5 = see separate list

https://truckmanualshub.com/

AUXILIARY HYDRAULICS FOR STANDARD MAST TYPE 180

Pos.	Part-No.	I	Designation	Qantity	replaced by	Remarks
35	**000 964 13 56**		**edge protection 13,5x120An**	**1**		

1 = Packaged quantities **2 = Restricted availability** **3 = Parts being phased out** **4 = not available individually** **5 = see separate list**

https://truckmanualshub.com/

https://truckmanualshub.com/

AUXILIARY HYDRAULICS FOR DUPLEX MAST TYPE 180

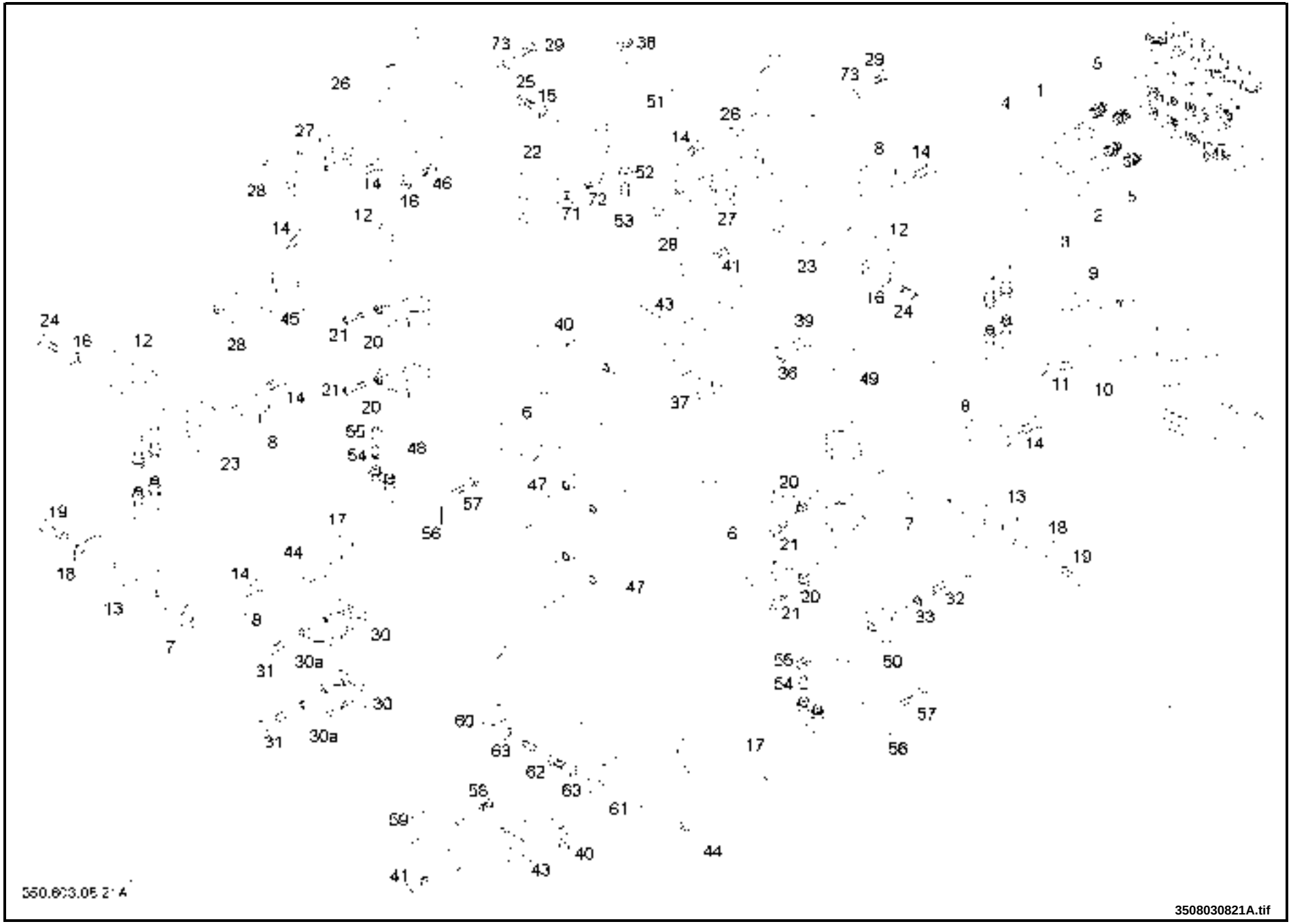

08

https://truckmanualshub.com/

AUXILIARY HYDRAULICS FOR DUPLEX MAST TYPE 180

Pos.	Part-No.	I	Designation	Qantity	replaced by	Remarks
						NOTE! Quantities indicated in front of the stroke apply to single auxiliary hydraulic services. Quantities indicated behind of the stroke apply to double auxiliary hydraulic services. HH = lift height (mm)
1	350 448 35 30		hoseline	1/1		
2	350 448 35 31		hoseline	1/1		
3	350 448 35 33		hoseline	/1		
4	350 448 35 32		hoseline	/1		
5	9 721 002 062		pipe union ISO 8434-1 SDS-S12xM18x1,5-type E-A3C-V	2/4		
5	000 961 22 94	3	pipe union GE12LM18x1,5	2	000 951 24 11	by annex sideshift
5	000 951 24 11		pipe union GE12SMY8434-A3C-V80	2		by annex sideshift
	000 914 00 00		throttle 1x11,9	2		by annex sideshift
6	000 950 57 60		double hose line	1/2		HH 2770
6	000 950 57 51		double hose line 3998mm	1/2		HH 3070
6	000 950 57 53		hose	1/2		HH 3270
6	000 950 57 56		double hose line 4448mm	1/2		HH 3570
6	000 950 57 58		double hose line 4648mm	1/2		HH 3770
7	180 440 77 29		support assy.	1/2		
8	180 441 48 20		support	a.req.		
9	000 955 08 01		clip DIN 3015 12 diam double	2/4		
10	000 955 15 01		cover plate DIN 3015-3 Z-DP-1-W1	2/4		
11	9 007 311 142	1	hexagon head bolt ISO 4014 M6x45-8.8-A2C	2/4		
12	000 955 08 11		clip	a.req.		
13	000 955 08 14		block clamp DIN 3015-3 Z-KP-2-R-18-18-PP	1/2		
14	9 045 316 183	1	socket-head screw ISO 4762 M8x25-8.8-A2C	a.req.		
15	9 292 003 018	1	washer DIN 125 DIN 125-A8,4x16x1,6-A2C	a.req.		
16	9 292 003 014	1	washer ISO 7089 A6,4-ST50-A2C	a.req.		

1 = Packaged quantities 2 = Restricted availability 3 = Parts being phased out 4 = not available individually 5 = see separate list

https://truckmanualshub.com/

AUXILIARY HYDRAULICS FOR DUPLEX MAST TYPE 180

Pos.	Part-No.	I	Designation	Qantity	replaced by	Remarks
17	000 955 08 47		clamp block DIN 3015-3 Z-KP-2-R-17,2-17, 2-PP	1/2		
18	000 955 15 00		cover plate DIN 3015-3 Z-DP-2-W1-A2C	1		
19	9 045 316 195	1	socket-head screw ISO 4762 M8x50-8.8-A2C	2		
20	180 441 58 12		support	2/4		
21	9 045 316 183	1	socket-head screw ISO 4762 M8x25-8.8-A2C	a.req.		
22	180 441 09 09		guide	1/2		
23	180 440 77 18	1	support assy.	1/2		
				2/4		HH 2970 |=>
				4/6		HH 3770 |=>
24	9 045 316 132	1	socket-head screw ISO 4762 M6x20-8.8-A2C	a.req.		
25	9 008 311 177	1	hexagon head screw ISO 4017 M8x16-8.8-A2C	a.req.		
26	183 441 09 00		guide	1/2		
27	180 440 77 28	1	support assy.	1/2		
28	180 441 58 12	1	support	a.req.		
29	9 045 316 132	1	socket-head screw ISO 4762 M6x20-8.8-A2C	2/4		
30	180 440 77 25		support assy.	2		
30a	180 441 58 36		support	2		
31	9 045 316 183	1	socket-head screw ISO 4762 M8x25-8.8-A2C	2		
32	9 007 311 195	1	hexagon head bolt ISO 4014 M8x50-8.8-A2C	4		
33	9 308 003 018	1	washer ISO 7093-1 8-200HV-A2C	4		
36	9 309 412 020	1	washer DIN 7349 DIN 7349-10,5x25x4	a.req.		
37	180 446 26 22		bracket	1		
38	9 210 281 130	1	nut hexagon ISO 4032 DIN 934-M10-8A2C	a.req.		
39	9 045 311 236	1	socket-head screw ISO 4762 M10x20-8.8-A2C	2		
40	000 950 22 01		clip assy.	2		
41	9 045 311 180	1	socket-head screw ISO 4762 M8x20-8.8-A2C	4		
43	000 964 45 68		clamping piece	2		

1 = Packaged quantities 2 = Restricted availability 3 = Parts being phased out 4 = not available individually 5 = see separate list

https://truckmanualshub.com/

AUXILIARY HYDRAULICS FOR DUPLEX MAST TYPE 180

Pos.	Part-No.	I	Designation	Qantity	replaced by	Remarks
44	000 918 53 45		fishplate	1/2		annex fork carriage
45	180 440 77 91		support assy.	/2		
46	9 045 316 132	1	socket-head screw ISO 4762 M6x20-8.8-A2C	a.req.		
47	180 440 45 02		guide assy.	1/2		HH 2770
47	180 440 45 03		guide assy.	1/2		HH 3070
47	180 440 45 04		guide assy.	1/2		HH 3270
47	180 440 45 06		guide assy.	1/2		HH 3570
47	180 440 45 07		guide assy.	1/2		HH 3770
48	180 440 45 22		guide assy.	1		HH 2770
48	180 440 45 24		guide assy.	1		HH 3070
48	180 440 45 25		guide assy.	1		HH 3270
48	180 440 45 26		guide assy.	1		HH 3570
48	180 440 45 27		guide assy.	1		HH 3770
49	180 440 45 30		guide assy.	1		HH 2770
49	180 440 45 32		guide assy.	1		HH 3070
49	180 440 45 34		guide assy.	1		HH 3570
49	180 440 45 35		guide assy.	1		HH 3670/3770
50	180 440 77 10		support assy.	1/		HH 3870 |=>
51	180 440 25 02		cap assy.	1		
52	9 294 003 020	1	washer DIN 433 DIN 433-10,5-ST50-A2C	2/		
53	9 045 316 233	1	socket-head screw ISO 4762 M10x16-8.8-A2C	1/		
54	000 952 70 11		plug pipe 12L/S-VKA-V80	2/4		
55	000 952 01 17		cap nut DIN 3870	2/4		
56	000 955 06 02		clip	1/2		
57	9 008 311 193	1	hexagon head screw ISO 4017 M8x45-8.8-A2C	1/2		annex fork carriage
57	9 008 311 188	1	hexagon head screw ISO 4017 M8x35-8.8-A2C	/1		annex sideshift
58	9 045 311 177	1	socket-head screw ISO 4762 M8x16-8.8-A2C	2		

1 = Packaged quantities 2 = Restricted availability 3 = Parts being phased out 4 = not available individually 5 = see separate list

https://truckmanualshub.com/

AUXILIARY HYDRAULICS FOR DUPLEX MAST TYPE 180

Pos.	Part-No.	I	Designation	Qantity	replaced by	Remarks
59	180 446 25 04		support	1		
60	180 441 58 00		support	1		
61	180 441 58 01		support	1		
62	9 008 311 177	1	hexagon head screw ISO 4017 M8x16-8.8-A2C	2		
63	9 309 412 018	1	washer DIN 7349 DIN 7349-8.4x21x4,8A2C	2		
71	9 309 412 014	1	washer DIN 7349 DIN 7349-6,4x17x3A2C	2/4		
72	9 008 610 132	1	hexagon head screw DIN 7500 DEM6x20-ST-A3B	2/4		
73	9 309 412 014	1	washer DIN 7349 DIN 7349-6,4x17x3A2C	2/4		

1 = Packaged quantities 2 = Restricted availability 3 = Parts being phased out 4 = not available individually 5 = see separate list

https://truckmanualshub.com/

https://truckmanualshub.com/

AUXILIARY HYDRAULICS FOR TIPLEX MAST TYPE 180

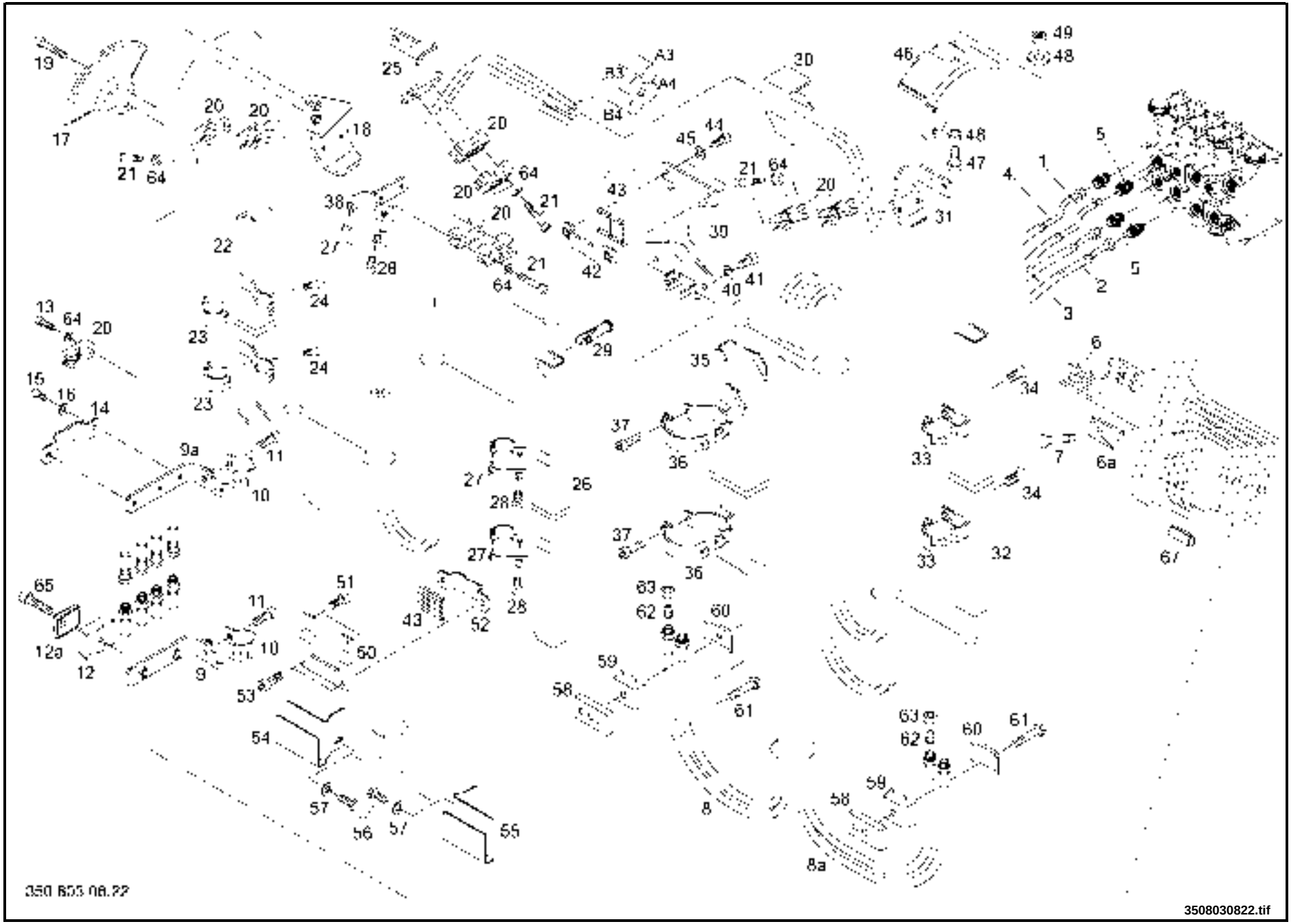

08

https://truckmanualshub.com/

AUXILIARY HYDRAULICS FOR TIPLEX MAST TYPE 180

Pos.	Part-No.	I	Designation	Qantity	replaced by	Remarks
						NOTE! Quantities indicated in front of the stroke apply to single auxiliary hydraulic services. Quantities indicated behind of the stroke apply to double auxiliary hydraulic services. HH = lift height (mm)
1	350 448 35 30		hoseline	1/1		
2	350 448 35 31		hoseline	1/1		
3	350 448 35 37		hoseline	/1		
4	350 448 35 32		hoseline	/1		
5	9 721 002 062		pipe union ISO 8434-1 SDS-S12xM18x1,5-type E-A3C-V	2/4		
5	000 961 22 94	3	pipe union GE12LM18x1,5	2	000 951 24 11	by annex sideshift
5	000 951 24 11		pipe union GE12SMY8434-A3C-V80	2		by annex sideshift
	000 914 00 00		throttle 1x11,9	2		by annex sideshift
6	000 955 08 01		clip DIN 3015 12 diam double	2/4		
6a	000 955 15 01		cover plate DIN 3015-3 Z-DP-1-W1	2/4		
7	9 007 311 142	1	hexagon head bolt ISO 4014 M6x45-8.8-A2C	2/4		
8	180 490 50 37		hose pipe assy. 6383 mm	1/1		HH 4020
8	180 490 50 38		hose pipe assy. 6633 mm	1/1		HH 4170
8	180 490 50 16		hose pipe assy. 6813 mm	1/1		HH 4470
8	180 490 50 17		hose pipe assy. 6863 mm	1/1		HH 4620
8	180 490 50 18		hose pipe assy. 7113 mm	1/1		HH 4770
8	180 490 50 19		hose pipe assy. 7463 mm	1/1		HH 5220
8	180 490 50 20		hose pipe assy. 8013 mm	1/1		HH 5470
8	180 490 50 55		hose pipe assy.	1/1		HH 5620
8	180 490 50 21		hose pipe assy. 8363 mm	1/1		HH 5920
8	180 490 50 22		hose pipe assy. 8663 mm	1/1		HH 6220
8a	180 490 50 39		hose pipe assy. 6348 mm	/1		HH 4020
8a	180 490 50 40		hose pipe assy. 6348 mm	/1		HH 4170

1 = Packaged quantities 2 = Restricted availability 3 = Parts being phased out 4 = not available individually 5 = see separate list

https://truckmanualshub.com/

AUXILIARY HYDRAULICS FOR TIPLEX MAST TYPE 180

Pos.	Part-No.	I	Designation	Qantity	replaced by	Remarks
8a	180 490 50 24		hose pipe assy. 6898 mm	/1		HH 4470
8a	180 490 50 25		hose pipe assy. 6948 mm	/1		HH 4620
8a	180 490 50 26		hose pipe assy. 7198 mm	/1		HH 4770
8a	180 490 50 27		hose pipe assy. 7548 mm	/1		HH 5220
8a	180 490 50 28		hose pipe assy. 8098 mm	/1		HH 5470
8a	180 490 50 29		hose pipe assy. 8448 mm	/1		HH 5920
8a	180 490 50 30		hose pipe assy. 8748 mm	/1		HH 6220
9	180 440 77 94		support assy.	1		
9a	180 440 77 24		support assy.	2		
10	180 441 48 20		support	3		
11	9 045 311 180	1	socket-head screw ISO 4762 M8x20-8.8-A2C	3		
12	000 955 08 14		block clamp DIN 3015-3 Z-KP-2-R-18-18-PP	1/2		
12a	000 955 15 00		cover plate DIN 3015-3 Z-DP-2-W1-A2C	1/2		
13	9 045 316 132		socket-head screw ISO 4762 M6x20-8.8-A2C			
14	000 955 09 12		clip DIN 72573-4-15-A2C	/3		
15	9 045 316 126	1	socket-head screw ISO 4762 M6x12-8.8-A2C	/6		
16	9 309 412 014	1	washer DIN 7349 DIN 7349-6,4x17x3A2C	/6		
17	180 441 09 22		guide	1		
18	180 440 29 03		angle assy.	1		
19	9 045 316 195	1	socket-head screw ISO 4762 M8x50-8.8-A2C	2		
20	000 955 08 11		clip	a.req.		
21	9 045 316 132	1	socket-head screw ISO 4762 M6x20-8.8-A2C	10/		
21	9 045 316 142	1	socket-head screw ISO 4762 M6x45-8.8-A2C	/8		
22	180 440 46 40		guide assy.	1		HH 4020/4170
22	180 440 46 41		guide assy.	1		HH 4470/4620/4770/4920
22	180 440 46 42		guide assy.	1		HH 5070/5220/5370 HH 5470/5620/5770/5920

1 = Packaged quantities 2 = Restricted availability 3 = Parts being phased out 4 = not available individually 5 = see separate list

https://truckmanualshub.com/

AUXILIARY HYDRAULICS FOR TIPLEX MAST TYPE 180

Pos.	Part-No.	I	Designation	Qantity	replaced by	Remarks
22	180 440 46 43		guide assy.	1		HH 6070/6220
23	180 441 58 52		support	2		
24	9 090 356 183	1	screw raised head ISO 7380 M8x25-10.9-DAC-sw	2		
25	180 441 58 60		support	1		
26	180 440 46 30		guide assy.	1		HH 4020/4170
26	180 440 46 31		guide assy.	1		HH 4470
26	180 440 46 32		guide assy.	1		HH 4620/4770
26	180 440 46 33		guide assy.	1		HH 4920/5070
26	180 440 46 39		guide assy.	1		HH 5220/5370
26	180 440 46 34		guide assy.	1		HH 5470
26	180 440 46 35		guide assy.	1		HH 5620/5770
26	180 440 46 36		guide assy.	1		HH 5920/6070
26	180 440 46 37		guide assy.	1		HH 6220
26	180 440 46 38		guide assy.	1		HH 6470
27	180 441 58 34		support	4		
28	9 062 316 180	1	countersunk screw ISO 10642 M8x20-8.8-A2C	4		
29	000 964 25 03		bolt	1		
30	000 931 30 47		bracket	1		
31	180 441 58 65		support	1		
32	180 440 46 55		guide assy.	1		HH 4020/4170/4320
32	180 440 46 20		guide assy.	1		HH 4470/4620/4770
32	180 440 46 21		guide assy.	1		HH 4920/5020/5220
32	180 440 46 23		guide assy.	1		HH 5370/5470
32	180 440 46 24		guide assy.	1		HH 5620/5770/5920
32	180 440 46 25		guide assy.	1		HH 6070/6220
33	180 441 58 09		support	2		
34	9 062 316 180	1	countersunk screw ISO 10642 M8x20-8.8-A2C	2		

1 = Packaged quantities 2 = Restricted availability 3 = Parts being phased out 4 = not available individually 5 = see separate list

https://truckmanualshub.com/

AUXILIARY HYDRAULICS FOR TIPLEX MAST TYPE 180

Pos.	Part-No.	I	Designation	Qantity	replaced by	Remarks
35	180 440 46 10		guide assy.	1		HH 4020/4170
35	180 440 46 11		guide assy.	1		HH 4320/4470
35	180 440 46 12		guide assy.	1		HH 4620/4770
35	180 440 46 13		guide assy.	1		HH 4920/5070
35	180 440 46 19		guide assy.	1		HH 5220/5370
35	180 440 46 14		guide assy.	1		HH 5470
35	180 440 46 15		guide assy.	1		HH 5620/5770
35	180 440 46 16		guide assy.	1		HH 5920/6070
35	180 440 46 17		guide assy.	1		HH 6220/6370
35	180 440 46 18		guide assy.	1		HH 6470
36	180 441 58 36		support	2		
37	9 045 316 183	1	socket-head screw ISO 4762 M8x25-8.8-A2C	2		
38	180 440 77 27	3	support assy.	2	180 440 77 95	
38	180 440 77 95		support assy.	2		
39	180 446 26 22		bracket	1		
40	9 309 412 020	1	washer DIN 7349 DIN 7349-10,5x25x4	2		
41	9 045 311 236		socket-head screw ISO 4762 M10x20-8.8-A2C	2		
42	000 950 22 01		clip assy.	1		
43	000 964 45 68		clamping piece	2		
44	9 045 311 180	1	socket-head screw ISO 4762 M8x20-8.8-A2C	2		
45	9 292 003 018	1	washer DIN 125 DIN 125-A8,4x16x1,6-A2C	2		
46	180 440 25 02		cap assy.	1		
47	9 045 316 233	1	socket-head screw ISO 4762 M10x16-8.8-A2C	1/		
48	9 294 003 020	1	washer DIN 433 DIN 433-10,5-ST50-A2C	2/		
49	9 210 281 130	1	nut hexagon ISO 4032 DIN 934-M10-8A2C	1/		Loctite nr. 270
50	180 446 25 04		support	1		
51	9 045 311 177	1	socket-head screw ISO 4762 M8x16-8.8-A2C	2		

1 = Packaged quantities 2 = Restricted availability 3 = Parts being phased out 4 = not available individually 5 = see separate list

https://truckmanualshub.com/

AUXILIARY HYDRAULICS FOR TIPLEX MAST TYPE 180

Pos.	Part-No.	I	Designation	Qantity	replaced by	Remarks
52	000 950 22 01		clip assy.	1		
53	9 045 311 180	1	socket-head screw ISO 4762 M8x20-8.8-A2C	2		
54	180 441 58 00		support	1/		
55	180 441 58 01		support	/1		
56	9 008 311 177	1	hexagon head screw ISO 4017 M8x16-8.8-A2C	1/2		
57	9 309 412 018	1	washer DIN 7349 DIN 7349-8.4x21x4,8A2C	1/2		
58	000 918 53 45		fishplate	1/2		annex fork carriage
59	000 955 08 47		clamp block DIN 3015-3 Z-KP-2-R-17,2-17, 2-PP	1/2		
60	000 955 06 02		clip	1/2		
61	9 008 311 193	1	hexagon head screw ISO 4017 M8x45-8.8-A2C	1/2		annex fork carriage
61	9 008 311 188	1	hexagon head screw ISO 4017 M8x35-8.8-A2C	/1		annex sideshift
62	000 952 70 11		plug pipe 12L/S-VKA-V80	2/4		
63	000 952 01 17		cap nut DIN 3870	2/4		
64	9 292 003 014	1	washer ISO 7089 A6,4-ST50-A2C	a.req.		
65	9 008 311 193	1	hexagon head screw ISO 4017 M8x45-8.8-A2C	1/2		
67	000 964 13 56		edge protection 13,5x120An	1		

1 = Packaged quantities 2 = Restricted availability 3 = Parts being phased out 4 = not available individually 5 = see separate list

https://truckmanualshub.com/

SIDESHIFTER FOR STANDARD MAST TYPE 180 =>| H2X180L08640

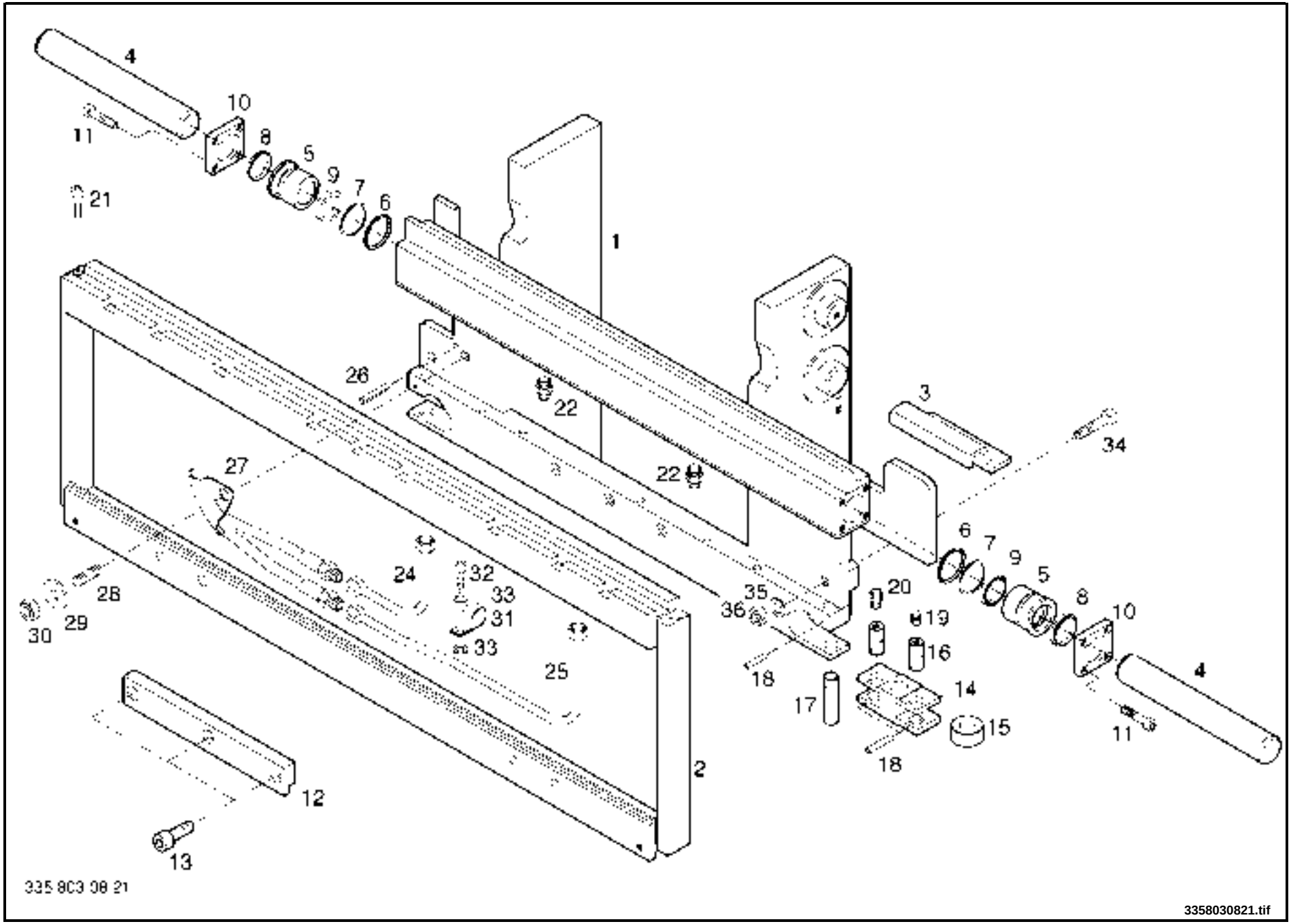

08

https://truckmanualshub.com/

SIDESHIFTER FOR STANDARD MAST TYPE 180 =>| H2X180L08640

Pos.	Part-No.	I	Designation	Qantity	replaced by	Remarks
	180 440 98 18	3	integrated sideshift assy. 1040 mm	1	180 440 98 28	= pos. 1-21
1	180 440 63 25		crossmember assy.	1		
2	180 440 91 19		carriage fork assy.	1		
3	183 446 56 00		bar slide	1		
4	183 446 03 00		bolt	2		
5	183 446 09 02		bush	2		
6	000 963 04 11		o ring	2		
7	000 962 27 16		support ring	2		
8	000 962 25 20		ring wiper	2		
9	000 962 19 37		ring grooved	2		
10	186 446 12 07		cover	2		
11	9 045 371 131		screw ISO 4762 M6x18-12.9	8		
12	180 446 25 24		support	1		
13	9 045 316 298	1	socket-head screw ISO 4762 M12x30-8.8-A2C	3		
14	180 446 25 25		support	2		
15	000 924 94 52	3	roller	4	000 924 94 85	
15	000 924 94 85		roller	4		
16	180 446 10 01		bolt	4		
17	180 446 10 02		bolt	2		
18	9 380 620 224	1	spring dowel sleeve ISO 8752 4x40-ST	6		
19	9 607 021 080	1	lubricating nipple (cone) DIN 71412 AM8x1	2		
20	9 607 021 082	1	lubrication nipple DIN 71412 71412-CM8X1	2		
21	9 048 316 234	1	socket-head screw DIN 7984 7984-M10x16-8.8A2C	2		
22	000 951 22 47		adaptor GE8LMY3901A3CV80	2		
24	180 448 41 09		pipeline	1		
25	180 448 41 10		pipeline	1		
26	9 380 627 317	1	pin spring slotted ISO 8752 6X28-1481-DAC	1		

1 = Packaged quantities 2 = Restricted availability 3 = Parts being phased out 4 = not available individually 5 = see separate list

https://truckmanualshub.com/

SIDESHIFTER FOR STANDARD MAST TYPE 180 =>| H2X180L08640

Pos.	Part-No.	I	Designation	Qantity	replaced by	Remarks
27	160 446 36 05		baffle	1		
28	9 124 311 183	1	stud DIN 939 M8X25-939-8.8A2C	1		
29	9 309 412 018	1	washer DIN 7349 DIN 7349-8.4x21x4,8A2C	1		
30	9 210 281 110	1	nut ISO 4032 934-M8-8A2C	1		
31	000 955 22 58		clip support DIN 3016-1 D1-10x20-W1-1	1		
32	9 045 311 180	1	socket-head screw ISO 4762 M8x20-8.8-A2C	1		
33	9 309 412 018	1	washer DIN 7349 DIN 7349-8.4x21x4,8A2C	2		
34	9 045 316 197	1	socket-head screw ISO 4762 M8x60-8.8-A2C	2		
35	9 292 003 018	1	washer DIN 125 DIN 125-A8,4x16x1,6-A2C	2		
36	9 214 317 110	1	hexagon nut ISO 7042 M8-8-A2C	2		

1 = Packaged quantities 2 = Restricted availability 3 = Parts being phased out 4 = not available individually 5 = see separate list

https://truckmanualshub.com/

https://truckmanualshub.com/

SIDESHIFTER FOR STANDARD MAST TYPE 180 H2X180L08641 |=>

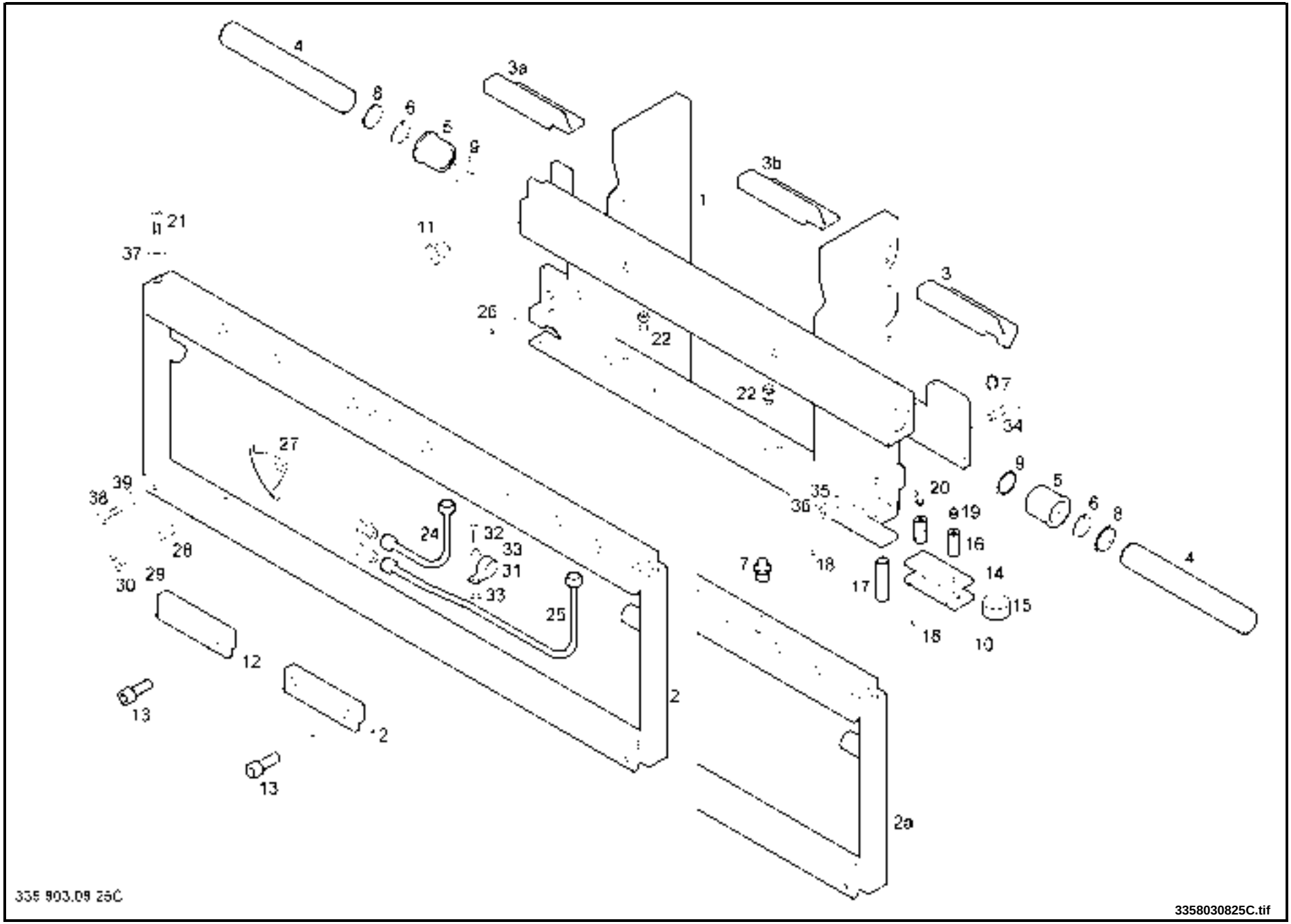

08

https://truckmanualshub.com/

SIDESHIFTER FOR STANDARD MAST TYPE 180 H2X180L08641 |=>

Pos.	Part-No.	I	Designation	Qantity	replaced by	Remarks
	180 440 98 28		side shift assy. 1040 mm	1		= pos. 1-21
1	180 440 63 26		crossmember assy.	1		
2	180 440 91 32	3	carriage fork assy.	1	180 440 91 53	
2a	180 440 91 53		fork carriage assy.	1		
3	180 446 09 06		guide	1		Plastic
3	115 446 56 03		wear strip	1		bronze
3a	180 446 09 07		slide	1		Plastic
3a	115 446 56 04		wear strip	1		bronze
3b	183 446 56 00		bar slide	1		
4	180 446 10 03		bolt	2		
5	180 446 06 04		bush	2		
6	9 456 622 518		retaining ring DIN 472 DIN 472-52x2	2		
7	9 607 021 060		lubrication nipple DIN 71412 71412-AM6	a.req.		
8	000 962 25 74		seal wiper	2		
9	000 962 19 79		seal ring grooved	2		
10	180 446 25 47		support	2		
11	000 952 40 42		screw plug M10X1-ED-A3C	2		
12	180 446 25 46		support	2		
13	9 045 371 295	1	socket head screw ISO 4762 M12x25-12.9	4		
14	180 446 25 48		support	2		
15	000 924 94 52	3	roller	4	000 924 94 85	
15	000 924 94 85		roller	4		
16	180 446 10 05		bolt	4		
17	180 446 10 04		bolt	2		
18	9 380 620 224	1	spring dowel sleeve ISO 8752 4x40-ST	6		
19	9 607 024 090	1	nipple lubrication DIN 71412 AM8	2		
20	9 607 024 092	1	nipple lubrication DIN 71412 CM8-Y71412	2		

1 = Packaged quantities 2 = Restricted availability 3 = Parts being phased out 4 = not available individually 5 = see separate list

https://truckmanualshub.com/

SIDESHIFTER FOR STANDARD MAST TYPE 180 H2X180L08641 |=>

Pos.	Part-No.	I	Designation	Qantity	replaced by	Remarks
21	9 048 316 234	1	socket-head screw DIN 7984 7984-M10x16-8.8A2C	2		=>| 05/2003
22	000 951 22 47		adaptor GE8LMY3901A3CV80	2	9 721 002 008	
22	9 721 002 008		pipe union ISO 8434-1 SDS-L8xM12x1,5-type E-A3C-V8	2		
24	180 448 41 09		pipeline	1		
25	180 448 41 10		pipeline	1		
26	9 380 627 317	1	pin spring slotted ISO 8752 6X28-1481-DAC	1		
27	160 446 36 05		baffle	1		
28	9 124 311 183	1	stud DIN 939 M8X25-939-8.8A2C	1		
29	9 309 412 018	1	washer DIN 7349 DIN 7349-8.4x21x4,8A2C	1		
30	9 210 281 110	1	nut ISO 4032 934-M8-8A2C	1		
31	000 955 22 58		clip support DIN 3016-1 D1-10x20-W1-1	1		=>| 02/2006
32	9 045 311 180	1	socket-head screw ISO 4762 M8x20-8.8-A2C	1		=>| 02/2006
33	9 309 412 018	1	washer DIN 7349 DIN 7349-8.4x21x4,8A2C	2		=>| 02/2006
34	9 045 316 197	1	socket-head screw ISO 4762 M8x60-8.8-A2C	2		
35	9 292 003 018	1	washer DIN 125 DIN 125-A8,4x16x1,6-A2C	2		
36	9 214 317 110	1	hexagon nut ISO 7042 M8-8-A2C	2		
37	9 294 003 020	1	washer DIN 433 DIN 433-10,5-ST50-A2C	2		=>| 05/2003
38	9 008 311 293		hexagon head screw ISO 4017 M12x20-8.8-A2C	2	9 008 311 291	06/2003 |=>
38	9 008 311 291		hexagon head screw ISO 4017 M12x16-8.8-A2C	2		
39	9 291 003 022	1	washer DIN 125 B12-HV200-A2C	2		06/2003 |=>

1 = Packaged quantities 2 = Restricted availability 3 = Parts being phased out 4 = not available individually 5 = see separate list

https://truckmanualshub.com/

https://truckmanualshub.com/

SIDESHIFTER FOR DUPLEX MAST TYPE 180 =>| H2X180L09343

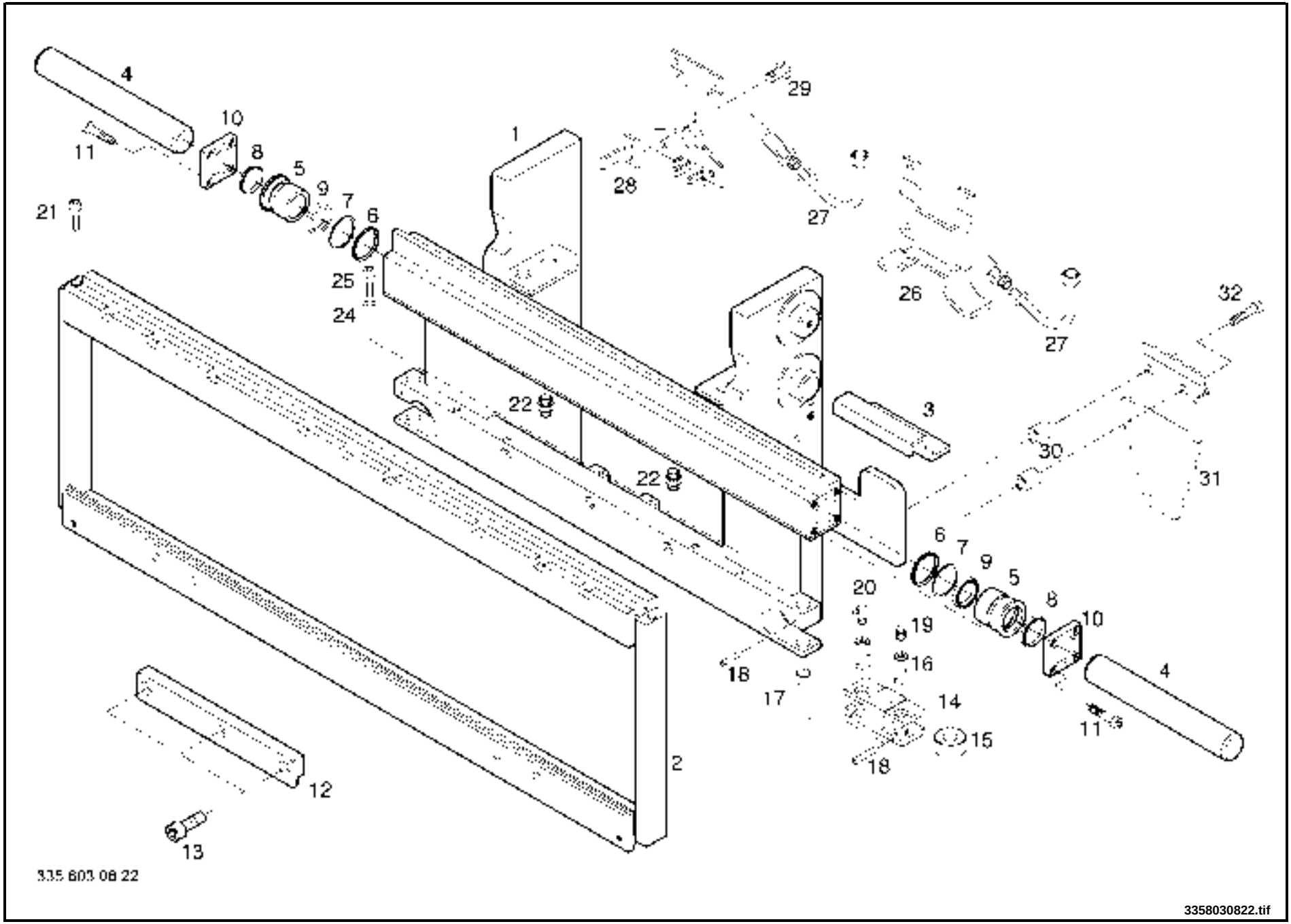

08

https://truckmanualshub.com/

SIDESHIFTER FOR DUPLEX MAST TYPE 180 =>| H2X180L09343

Pos.	Part-No.	I	Designation	Qantity	replaced by	Remarks
	180 440 98 10	3	integrated sideshift assy. 1040 mm	1	180 440 98 29	= pos. 1-21
1	180 440 63 20		beam support assy.	1		
2	180 440 91 15		fork carriage	1		
3	183 446 56 00		bar slide	1		
4	183 446 03 00		bolt	2		
5	183 446 09 02		bush	2		
6	000 963 04 11		o ring	2		
7	000 962 27 16		support ring	2		
8	000 962 25 20		ring wiper	2		
9	000 962 19 37		ring grooved	2		
10	186 446 12 07		cover	2		
11	9 045 371 131	1	screw ISO 4762 M6x18-12.9	8		
12	180 446 25 24		support	1		
13	9 045 316 298	1	socket-head screw ISO 4762 M12x30-8.8-A2C	3		
14	180 446 25 25		support	2		
15	000 924 94 52	3	roller	4	000 924 94 85	
15	000 924 94 85		roller	4		
16	180 446 10 01		bolt	4		
17	180 446 10 02		bolt	2		
18	9 380 620 224	1	spring dowel sleeve ISO 8752 4x40-ST	6		
19	9 607 021 080	1	lubricating nipple (cone) DIN 71412 AM8x1	2		
20	9 607 021 082	1	lubrication nipple DIN 71412 71412-CM8X1	2		
21	9 048 316 234	1	socket-head screw DIN 7984 7984-M10x16-8.8A2C	2		
22	000 951 22 47		adaptor GE8LMY3901A3CV80	2		
24	000 916 09 23		bush 9x12x32-ST-A2C	2/4		
25	9 045 316 190	1	socket-head screw ISO 4762 M8x40-8.8-A2C	2/4		
26	180 440 77 07		support assy.	1		

1 = Packaged quantities 2 = Restricted availability 3 = Parts being phased out 4 = not available individually 5 = see separate list

https://truckmanualshub.com/

SIDESHIFTER FOR DUPLEX MAST TYPE 180 =>| H2X180L09343

Pos.	Part-No.	I	Designation	Qantity	replaced by	Remarks
27	180 440 15 10		pipeline	2		
28	180 441 48 06		angle	/1		
29	9 008 610 096	1	hexagon head screw DIN 7500 DEM5x12-ST-A3B	/2		
30	000 916 11 33		bush 11X15X15-A2C	/2		
31	180 441 58 15		support	/1		
32	9 045 316 186	1	socket-head screw ISO 4762 M8x30-8.8-A2C	/2		

1 = Packaged quantities 2 = Restricted availability 3 = Parts being phased out 4 = not available individually 5 = see separate list

https://truckmanualshub.com/

https://truckmanualshub.com/

SIDESHIFTER FOR DUPLEX MAST TYPE 180 H2X180L09344 |=>

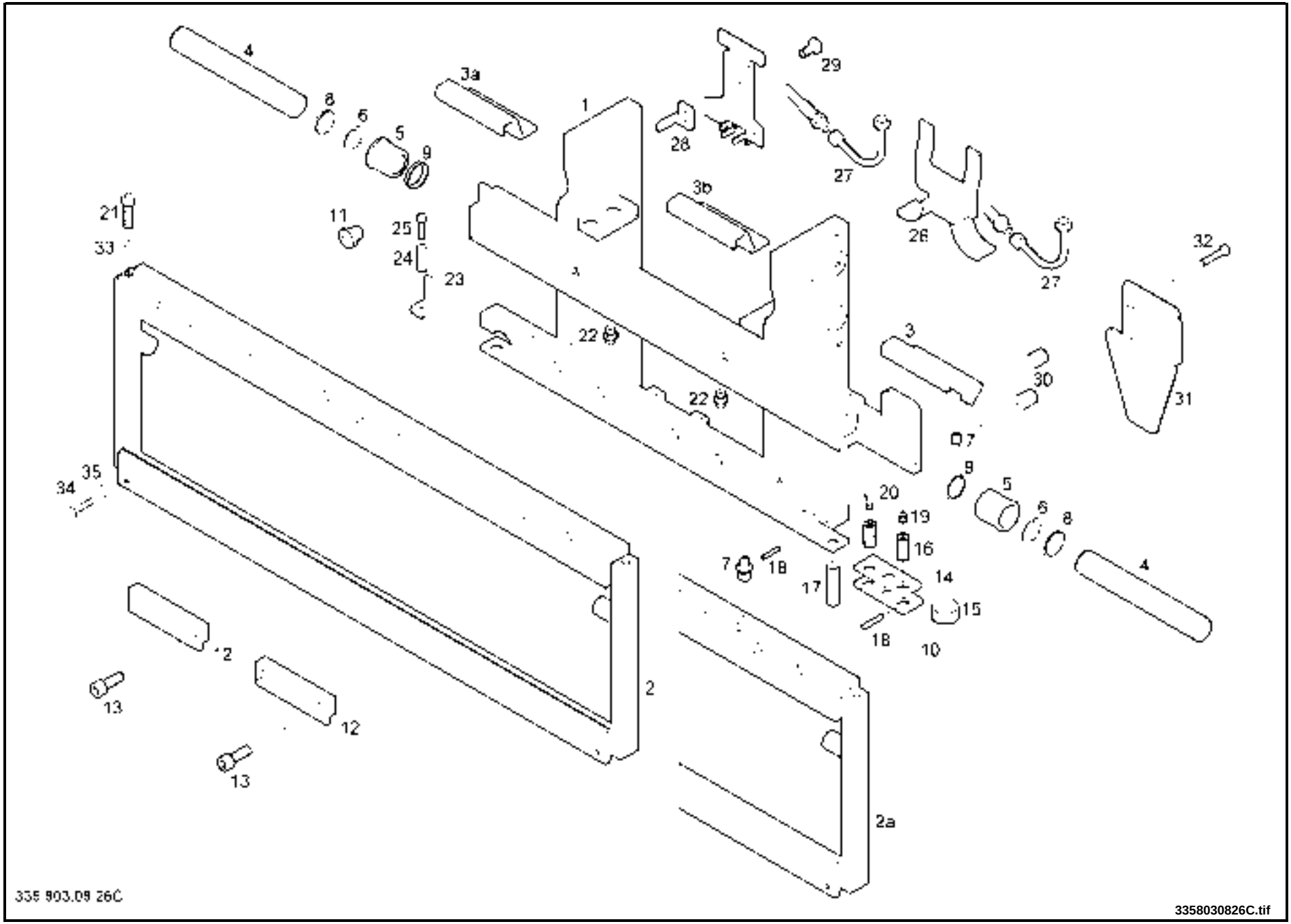

08

https://truckmanualshub.com/

SIDESHIFTER FOR DUPLEX MAST TYPE 180 H2X180L09344 |=>

Pos.	Part-No.	I	Designation	Qantity	replaced by	Remarks
	180 440 98 29		side shift assy. 1040 mm	1		= pos. 1-21
1	180 440 63 27		crossmember assy.	1		
2	180 440 91 32	3	carriage fork assy.	1	180 440 91 53	
2a	180 440 91 53		fork carriage assy.	1		
3	180 446 09 06		guide	1		Plastic
3	115 446 56 03		wear strip	1		bronze
3a	180 446 09 07		slide	1		Plastic
3a	115 446 56 04		wear strip	1		bronze
3b	183 446 56 00		bar slide	1		
4	180 446 10 03		bolt	2		
5	180 446 06 04		bush	2		
6	9 456 622 518		retaining ring DIN 472 DIN 472-52x2	2		
7	9 607 021 060		lubrication nipple DIN 71412 71412-AM6	a.req.		
8	000 962 25 74		seal wiper	2		
9	000 962 19 79		seal ring grooved	2		
10	180 446 25 47		support	2		
11	000 952 40 42		screw plug M10X1-ED-A3C	2		
12	180 446 25 46		support	2		
13	9 045 371 295	1	socket head screw ISO 4762 M12x25-12.9	4		
14	180 446 25 48		support	2		
15	000 924 94 52	3	roller	4	000 924 94 85	
15	000 924 94 85		roller	4		
16	180 446 10 05		bolt	4		
17	180 446 10 04		bolt	2		
18	9 380 620 224	1	spring dowel sleeve ISO 8752 4x40-ST	6		
19	9 607 024 090	1	nipple lubrication DIN 71412 AM8	2		
20	9 607 024 092	1	nipple lubrication DIN 71412 CM8-Y71412	2		

1 = Packaged quantities 2 = Restricted availability 3 = Parts being phased out 4 = not available individually 5 = see separate list

https://truckmanualshub.com/

SIDESHIFTER FOR DUPLEX MAST TYPE 180 H2X180L09344 |=>

Pos.	Part-No.	I	Designation	Qantity	replaced by	Remarks
21	9 048 316 234	1	socket-head screw DIN 7984 7984-M10x16-8.8A2C	2		=>| 05/2003
22	000 951 22 47		adaptor GE8LMY3901A3CV80	2	9 721 002 008	
22	9 721 002 008		pipe union ISO 8434-1 SDS-L8xM12x1,5-type E-A3C-V8	2		
23	000 918 74 94		plate retainer	1/2		
24	000 916 09 23		bush 9x12x32-ST-A2C	1/2	000 917 09 03	including: 1x 9.045.316.195
24	000 917 09 03		pipe	1/2		
25	9 045 316 190	1	socket-head screw ISO 4762 M8x40-8.8-A2C	1/2	9 045 316 195	
25	9 045 316 195	1	socket-head screw ISO 4762 M8x50-8.8-A2C	1/2		
26	180 440 77 07		support assy.	1		
27	180 440 15 10		pipeline	2		
28	180 441 48 06		angle	/1		
29	9 008 610 096	1	hexagon head screw DIN 7500 DEM5x12-ST-A3B	/2		
30	000 916 11 33		bush 11X15X15-A2C	/2		=>| 09/2005
31	180 441 58 15		support	/1		=>| 09/2005
32	9 045 316 186	1	socket-head screw ISO 4762 M8x30-8.8-A2C	/2		=>| 09/2005
33	9 294 003 020	1	washer DIN 433 DIN 433-10,5-ST50-A2C	2		=>| 05/2003
34	9 008 311 293		hexagon head screw ISO 4017 M12x20-8.8-A2C	2	9 008 311 291	06/2003 |=>
34	9 008 311 291		hexagon head screw ISO 4017 M12x16-8.8-A2C	2		
35	9 291 003 022	1	washer DIN 125 B12-HV200-A2C	2		06/2003 |=>

08

1 = Packaged quantities 2 = Restricted availability 3 = Parts being phased out 4 = not available individually 5 = see separate list

https://truckmanualshub.com/

https://truckmanualshub.com/

SIDESHIFTER FOR TRIPLEX MAST TYPE 180 =>| H2X180L07369

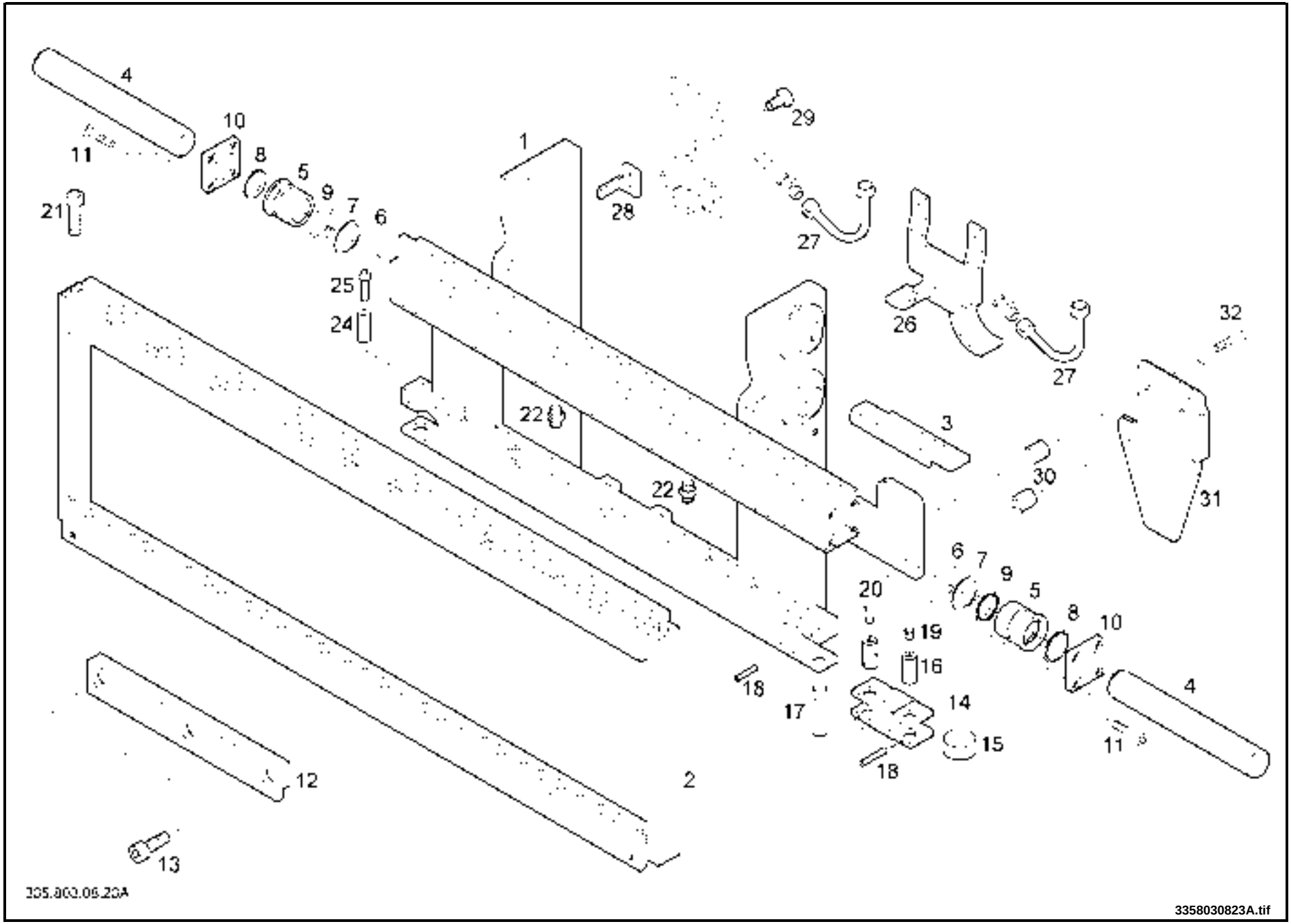

08

https://truckmanualshub.com/

SIDESHIFTER FOR TRIPLEX MAST TYPE 180 =>| H2X180L07369

Pos.	Part-No.	I	Designation	Qantity	replaced by	Remarks
	180 440 98 11	3	integrated sideshift assy. 1040 mm	1	180 440 98 30	= pos. 1-21
1	180 440 63 21		beam support assy.	1		
2	180 440 91 15		fork carriage	1		
3	183 446 56 00		bar slide	1		
4	183 446 03 00		bolt	2		
5	183 446 09 02		bush	2		
6	000 963 04 11		o ring	2		
7	000 962 27 16		support ring	2		
8	000 962 25 20		ring wiper	2		
9	000 962 19 37		ring grooved	2		
10	186 446 12 07		cover	2		
11	9 045 371 131	1	screw ISO 4762 M6x18-12.9	8		
12	180 446 25 24		support	1		
13	9 045 316 298	1	socket-head screw ISO 4762 M12x30-8.8-A2C	3		
14	180 446 25 25		support	2		
15	000 924 94 52	3	roller	4	000 924 94 85	
15	000 924 94 85		roller	4		
16	180 446 10 01		bolt	4		
17	180 446 10 02		bolt	2		
18	9 380 620 224	1	spring dowel sleeve ISO 8752 4x40-ST	6		
19	9 607 021 080	1	lubricating nipple (cone) DIN 71412 AM8x1	2		
20	9 607 021 082	1	lubrication nipple DIN 71412 71412-CM8X1	2		
21	9 048 316 234	1	socket-head screw DIN 7984 7984-M10x16-8.8A2C	2		
22	000 951 22 47		adaptor GE8LMY3901A3CV80	2		
24	000 916 09 23		bush 9x12x32-ST-A2C	2/4		
25	9 045 316 190	1	socket-head screw ISO 4762 M8x40-8.8-A2C	2/4		
26	180 440 77 07		support assy.	1		

1 = Packaged quantities 2 = Restricted availability 3 = Parts being phased out 4 = not available individually 5 = see separate list

https://truckmanualshub.com/

SIDESHIFTER FOR TRIPLEX MAST TYPE 180 =>| H2X180L07369

Pos.	Part-No.	I	Designation	Qantity	replaced by	Remarks
27	180 440 15 10		pipeline	2		
28	180 441 48 06		angle	/1		
29	9 008 610 096	1	hexagon head screw DIN 7500 DEM5x12-ST-A3B	/2		
30	000 916 11 33		bush 11X15X15-A2C	/2		
31	180 441 58 15		support	/1		
32	9 045 316 186	1	socket-head screw ISO 4762 M8x30-8.8-A2C	/2		

1 = Packaged quantities 2 = Restricted availability 3 = Parts being phased out 4 = not available individually 5 = see separate list

https://truckmanualshub.com/

https://truckmanualshub.com/

SIDESHIFTER FOR TRIPLEX MAST TYPE 180 H2X180L07370 |=>

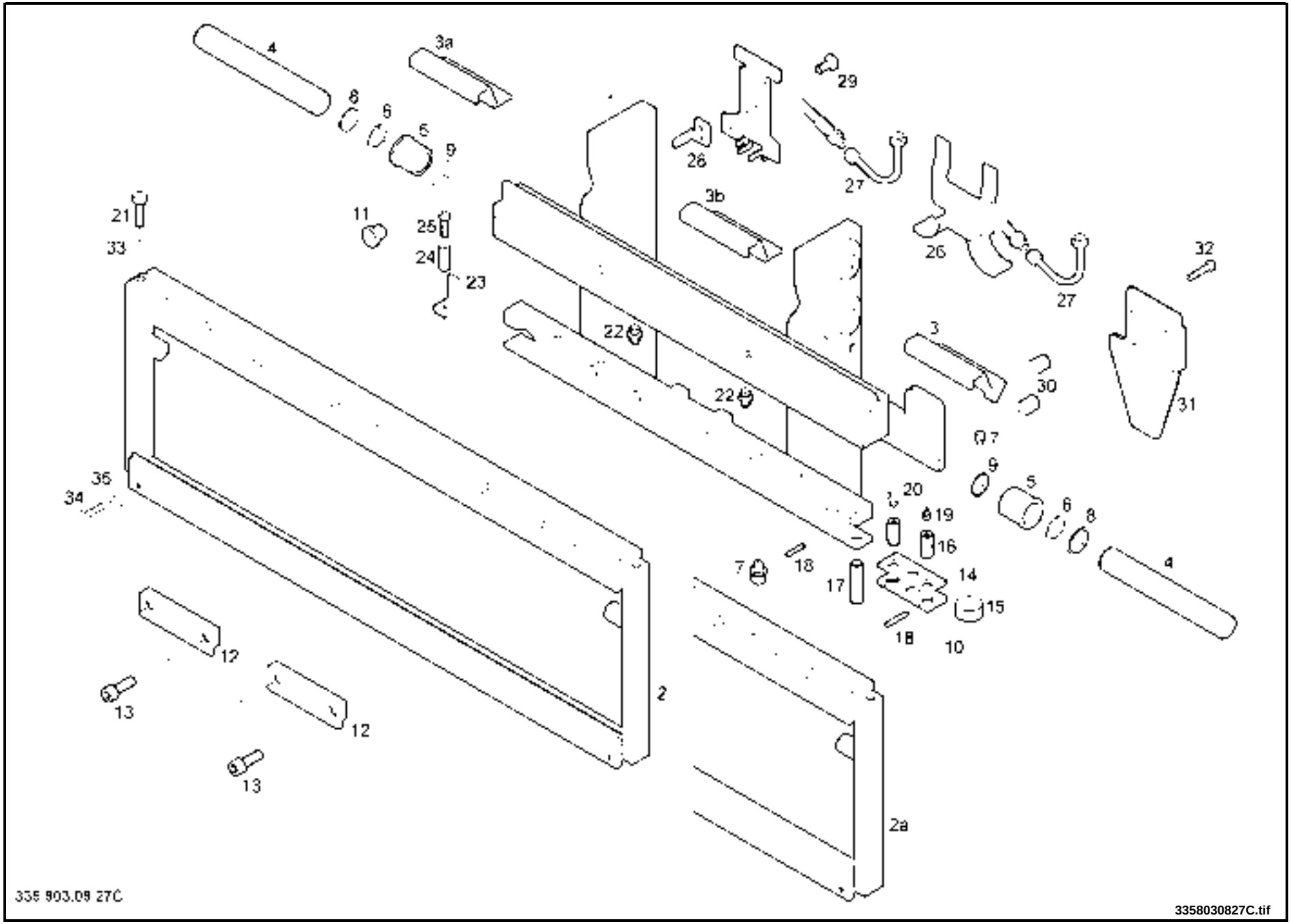

08

https://truckmanualshub.com/

SIDESHIFTER FOR TRIPLEX MAST TYPE 180 H2X180L07370 |=>

Pos.	Part-No.	I	Designation	Qantity	replaced by	Remarks
	180 440 98 30		side shift assy. 1040 mm	1		
1	180 440 63 28		crossmember assy.	1		
2	180 440 91 32	3	carriage fork assy.	1	180 440 91 53	
2a	180 440 91 53		fork carriage assy.	1		
3	180 446 09 06		guide	1		Plastic
3	115 446 56 03		wear strip	1		bronze
3a	180 446 09 07		slide	1		Plastic
3a	115 446 56 04		wear strip	1		bronze
3b	183 446 56 00		bar slide	1		
4	180 446 10 03		bolt	2		
5	180 446 06 04		bush	2		
6	9 456 622 518		retaining ring DIN 472 DIN 472-52x2	2		
7	9 607 021 060		lubrication nipple DIN 71412 71412-AM6	a.req.		
8	000 962 25 74		seal wiper	2		
9	000 962 19 79		seal ring grooved	2		
10	180 446 25 47		support	2		
11	000 952 40 42		screw plug M10X1-ED-A3C	2		
12	180 446 25 46		support	2		
13	9 045 371 295	1	socket head screw ISO 4762 M12x25-12.9	4		
14	180 446 25 48		support	2		
15	000 924 94 52	3	roller	4	000 924 94 85	
15	000 924 94 85		roller	4		
16	180 446 10 05		bolt	4		
17	180 446 10 04		bolt	2		
18	9 380 620 224	1	spring dowel sleeve ISO 8752 4x40-ST	6		
19	9 607 024 090	1	nipple lubrication DIN 71412 AM8	2		
20	9 607 024 092	1	nipple lubrication DIN 71412 CM8-Y71412	2		

1 = Packaged quantities 2 = Restricted availability 3 = Parts being phased out 4 = not available individually 5 = see separate list

https://truckmanualshub.com/

SIDESHIFTER FOR TRIPLEX MAST TYPE 180 H2X180L07370 |=>

Pos.	Part-No.	I	Designation	Qantity	replaced by	Remarks
21	9 048 316 234	1	socket-head screw DIN 7984 7984-M10x16-8.8A2C	2		=>| 05/2003
22	000 951 22 47		adaptor GE8LMY3901A3CV80	2	9 721 002 008	
22	9 721 002 008		pipe union ISO 8434-1 SDS-L8xM12x1,5-type E-A3C-V8	2		
23	000 918 74 94		plate retainer	1/2		
24	000 916 09 23		bush 9x12x32-ST-A2C	1/2	000 917 09 03	including: 1x 9.045.316.195
24	000 917 09 03		pipe	1/2		
25	9 045 316 190	1	socket-head screw ISO 4762 M8x40-8.8-A2C	1/2	9 045 316 195	
25	9 045 316 195	1	socket-head screw ISO 4762 M8x50-8.8-A2C	1/2		
26	180 440 77 07		support assy.	1		
27	180 440 15 10		pipeline	2		
28	180 441 48 06		angle	/1		
29	9 008 610 096	1	hexagon head screw DIN 7500 DEM5x12-ST-A3B	/2		
30	000 916 11 33		bush 11X15X15-A2C	/2		=>| 09/2005
31	180 441 58 15		support	/1		=>| 09/2005
32	9 045 316 186	1	socket-head screw ISO 4762 M8x30-8.8-A2C	/2		=>| 09/2005
33	9 294 003 020	1	washer DIN 433 DIN 433-10,5-ST50-A2C	2		=>| 05/2003
34	9 008 311 293		hexagon head screw ISO 4017 M12x20-8.8-A2C	2	9 008 311 291	06/2003 |=>
34	9 008 311 291		hexagon head screw ISO 4017 M12x16-8.8-A2C	2		
35	9 291 003 022	1	washer DIN 125 B12-HV200-A2C	2		06/2003 |=>

08

1 = Packaged quantities 2 = Restricted availability 3 = Parts being phased out 4 = not available individually 5 = see separate list

https://truckmanualshub.com/

Register 09 : SPECIAL EQUIPMENT

09/01	00 - 02	HIGHWAY EQUIPMENT
09/02	00 - 01	LOADGUARD FOR MAST TYPE 180

https://truckmanualshub.com/

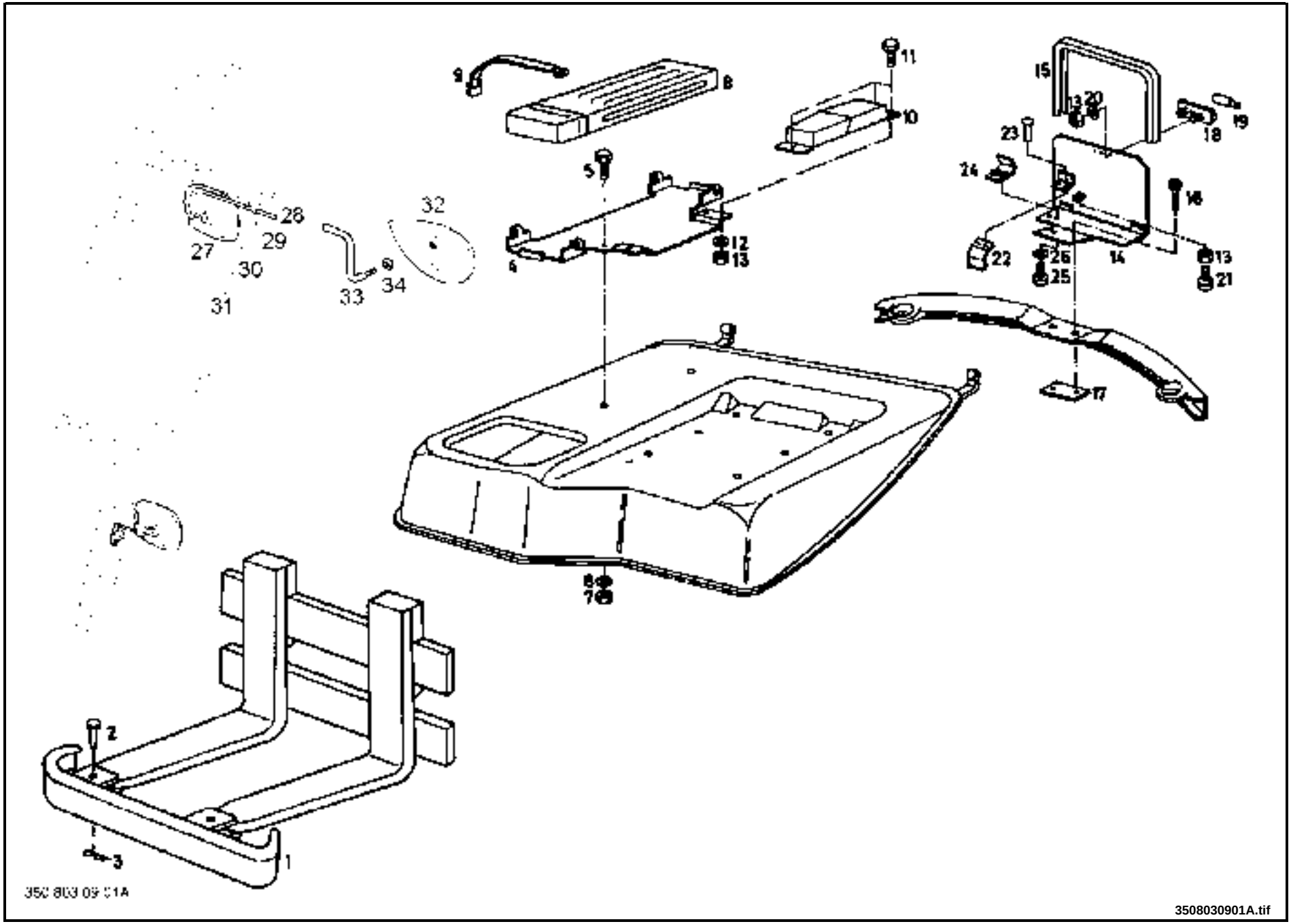

https://truckmanualshub.com/

HIGHWAY EQUIPMENT

Pos.	Part-No.	I	Designation	Qantity	replaced by	Remarks
1	300 430 83 00		protective cover assy.	1		drawing reworking fork arms 100.808.24.02
2	000 908 22 01		rivet mushroom head 16X60-ST	2		
3	9 466 650 040	1	clip DIN 11024 4-11024-A2C	2		
4	350 431 18 00		support	1		
5	9 008 311 177	1	hexagon head screw ISO 4017 M8x16-8.8-A2C	2		
6	9 292 003 018	1	washer DIN 125 DIN 125-A8,4x16x1,6-A2C	2		
7	9 210 281 110	1	nut ISO 4032 934-M8-8A2C	2		
8	000 994 04 00		warning triangle w.case 460x140x40	1		
9	000 937 01 09		strap tightening 3X20X142	2		
10	000 974 17 00		light warning	1		
11	9 008 311 128	1	hexagon head screw ISO 4017 M6x16-8.8-A2C	3		
12	9 292 003 014	1	washer ISO 7089 A6,4-ST50-A2C	3		
13	9 210 281 090	1	hexagon nut ISO 4032 DIN 934-M6-8A2C	6		
14	350 600 15 00		retainer number-plate assy.	1		
15	000 964 13 34		edge protection 17X570 BLACK	1		
16	9 087 101 128	1	screw pan head ISO 7045 M6X16-7985-4.8A2C	2		
17	000 918 52 06		fishplate	1		
18	000 974 07 00		number-plate light	1		
	000 974 78 01		lamp socket	1		to pos.18
19	7 9195 00 971		bulb DIN 72601 12V-5W	1		
20	9 321 620 014	1	spring washer DIN 127 B6-A2C	2		
21	000 965 25 07		rubber steel mounting DIN 95364 DM6x16,5	1		
22	000 922 51 44		spring	1		
23	000 908 23 06	1	rivet pop 4.8X15.6X1.8-AL	2		
24	000 931 73 07		bracket	1		
25	9 008 311 135	1	hexagon head screw ISO 4017 M6x25-8.8-A2C	2		

1 = Packaged quantities 2 = Restricted availability 3 = Parts being phased out 4 = not available individually 5 = see separate list

https://truckmanualshub.com/

Pos.	Part-No.	I	Designation	Qantity	replaced by	Remarks
26	9 309 412 014	1	washer DIN 7349 DIN 7349-6,4x17x3A2C	2		
27	000 994 10 07		mirror 130x185	1		
28	000 931 72 39		rod	1		left / centre
28	350 436 45 00		rod	1		right
29	352 430 46 00		bearing block assy.	1		
30	9 064 609 129	1	screw DIN 7500	2		
31	9 133 339 174	1	threaded pin DIN 913 DIN 913-M8X10-22H	1	9 008 311 174	
31	9 008 311 174	1	hexagon head screw ISO 4017 M8x10-8.8-A2C	1		
	000 990 40 00		mirror assy.	1		= Pos. 29-34
32	000 994 10 12		mirror rear-view (panorama) panorama	1		
33	353 437 62 20		support panoramic mirror	1		
34	9 210 281 110		nut ISO 4032 934-M8-8A2C	1		
	000 962 01 68		pipe plug WN 17253 WN 17253-5,2x7	6		

1 = Packaged quantities 2 = Restricted availability 3 = Parts being phased out 4 = not available individually 5 = see separate list

https://truckmanualshub.com/

https://truckmanualshub.com/

LOADGUARD FOR MAST TYPE 180

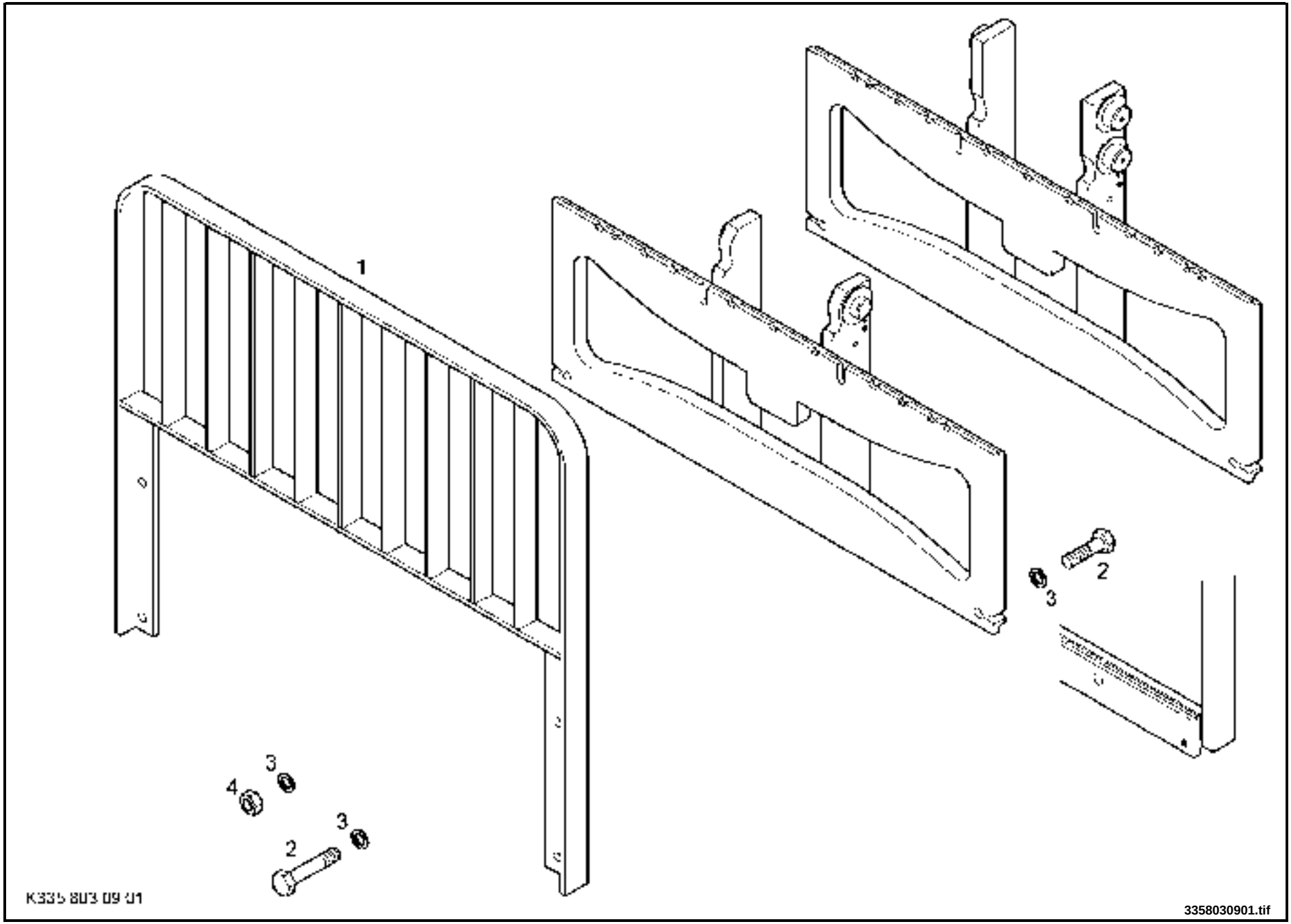

09

https://truckmanualshub.com/

LOADGUARD FOR MAST TYPE 180

Pos.	Part-No.	I	Designation	Qantity	replaced by	Remarks
1	150 430 72 05		guard load assy. 1050 mm	1		1050 mm
1	160 430 72 07		load backrest assy. 1040 mm	1		1040 mm
2	9 008 311 300	1	hexagon head screw ISO 4017 M12x35-8.8-A2C	2		annex sideshift
2	9 007 311 310	1	hexagon head bolt ISO 4014 M12x70-8.8-A2C	2		annex fork carriage
3	9 309 412 022	1	washer DIN 7349 DIN 7349-13x30x6-A2C	4		
4	9 210 281 140	1	hexagon nut ISO 4032 DIN 934-M12-8A2C	2		

1 = Packaged quantities 2 = Restricted availability 3 = Parts being phased out 4 = not available individually 5 = see separate list

https://truckmanualshub.com/

Register 10 : MISCELLANEOUS

10/01	00 - 02	PLATES =>| 02/2000
10/01A	00 - 03	PLATES 03/2000 |=>
10/02	00 - 01	OPERATING MATERIAL
10/03	00 - 01	BAG FOR TECHNICAL DOCUMENTATION

https://truckmanualshub.com/

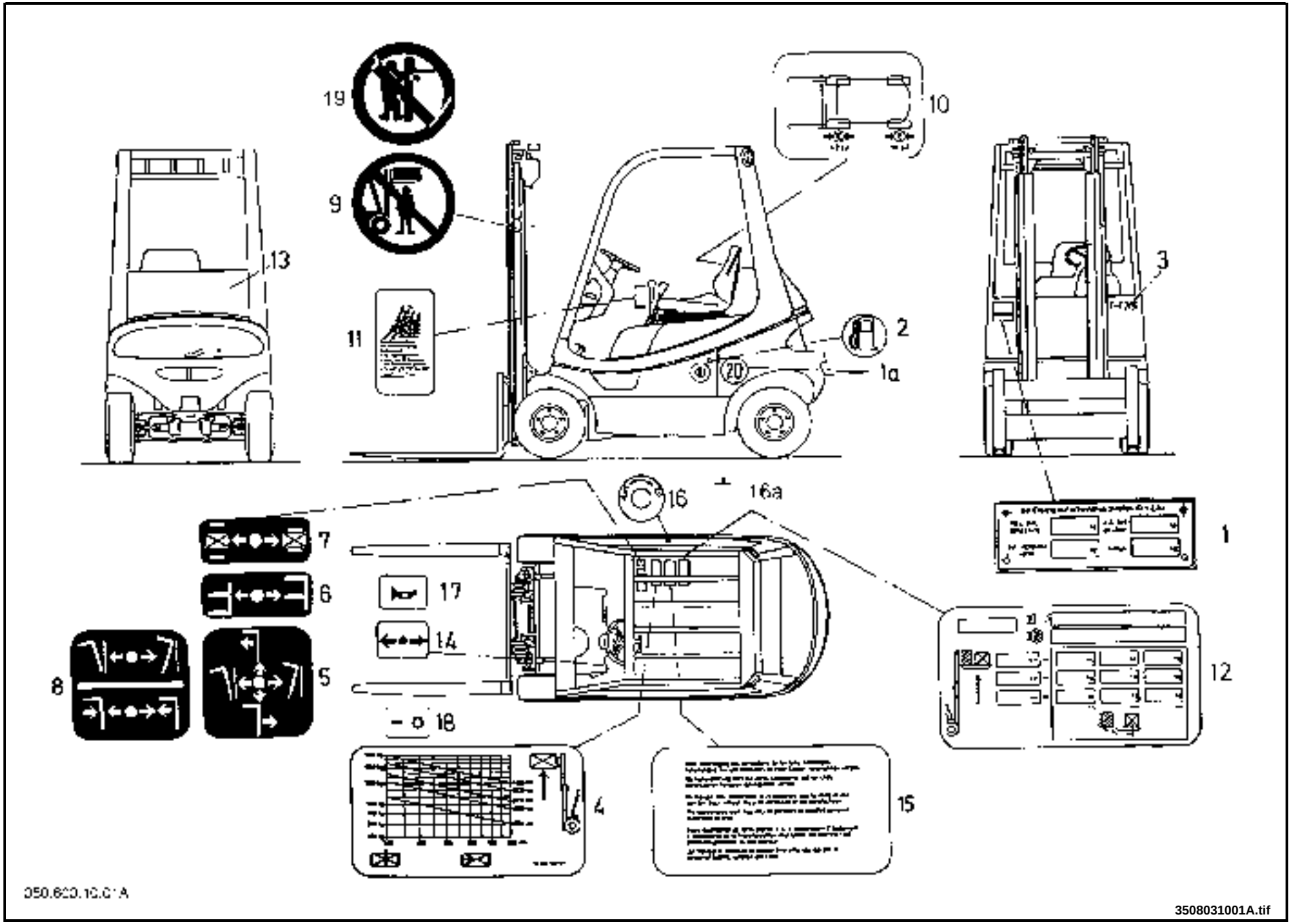

https://truckmanualshub.com/

PLATES =>| 02/2000

Pos.	Part-No.	I	Designation	Qantity	replaced by	Remarks
	-		spare parts list	1		supply as per customer specification
	-		spare parts list CD-ROM	1		supply as per customer specification
	-		operating instructions(english)126 p60z	1		supply as per customer specification
1	-		nameplate StVZO	1		supply as per customer specification
	000 964 70 02		adhesive foil	1		for pos. 1
1a	000 938 19 01		label 20 km/h	2		for STVZO
2	000 938 18 71		label fuel filler	1		
3	000 938 22 65		label H12	1		
3	000 938 22 93		label	1		
3	000 938 20 37		label	1		
3	000 938 22 59		label H20	1		
4	-		label	1		supply as per customer specification
	000 938 18 75		michelin symbol	1		to pos.4, Michelin-tyres front
5	000 938 13 92		label oper.s/lever	1		
6	000 938 16 25		label oper.s/shift 5.4X37X88	1		
7	000 938 13 94		label op. sq/clamp 5.9X37X88	1		
8	000 938 16 06		label op.ind/lever 5.1X88X88	1		single lever operation
9	000 938 18 67		label restriction symbol	2		
10	000 938 18 43		label	1		for tyres front: 18x7-8/16PR rear: 18x7-8/16PR
11	000 938 13 85		label (information) 75X140	1		
12	000 938 21 69		label (lifting capacity) attachment	1		for attachments-instrument
	000 964 70 03		adhesive foil (610260194)	1		to pos. 12
13	000 938 06 30	3	transfer Linde-560-9002	1	000 938 06 65	
13	000 938 06 65		label text Linde-560-new-9002	1		

1 = Packaged quantities 2 = Restricted availability 3 = Parts being phased out 4 = not available individually 5 = see separate list

https://truckmanualshub.com/

PLATES =>| 02/2000

Pos.	Part-No.	I	Designation	Qantity	replaced by	Remarks
13	000 938 06 34		label text Fenwick-560-neu-9002	1		
13	000 938 06 36		label text lansing 120X560	1		
14	000 938 18 61		label (operating symbols)	1		single pedal operation
15	000 938 18 12		label reference	1		
16	000 938 14 11	3	label	1	000 938 09 29	
16a	000 938 09 29		label	1		
17	000 938 18 62		sign horn decal	1		
18	000 938 18 60		label contactor	1		
19	000 938 01 02		label	1		

1 = Packaged quantities 2 = Restricted availability 3 = Parts being phased out 4 = not available individually 5 = see separate list

https://truckmanualshub.com/

https://truckmanualshub.com/

PLATES 03/2000 |=>

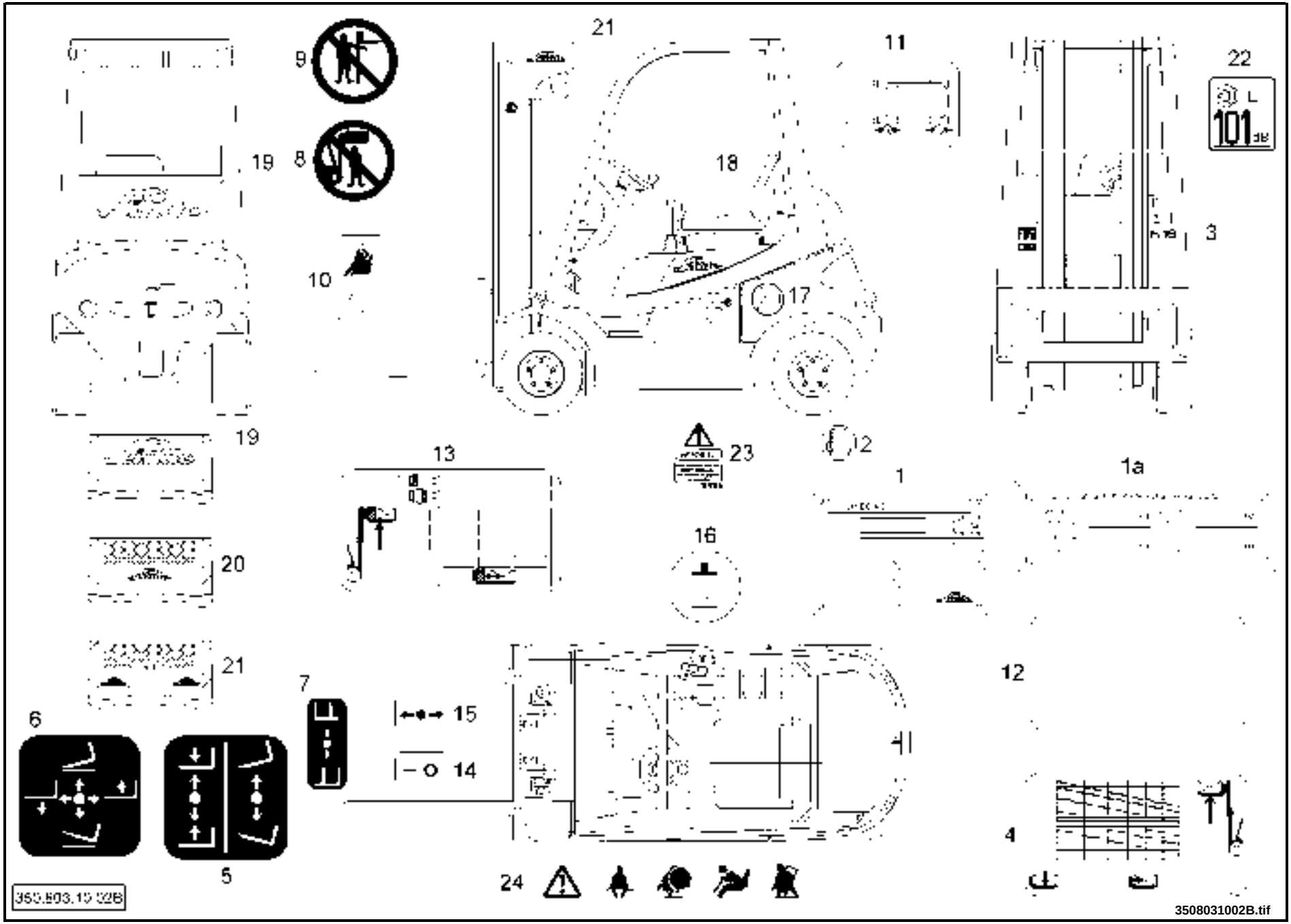

https://truckmanualshub.com/

PLATES 03/2000 |=>

Pos.	Part-No.	I	Designation	Qantity	replaced by	Remarks
	-		spare parts list	1		supply as per customer specification
	-		spare parts list CD-ROM	1		supply as per customer specification
	-		operating instructions(english)126 p60z	1		supply as per customer specification
1	-		name plate	1		supply as per customer specification
	000 964 70 00		adhesive foil	1		for pos. 1
1a	-		nameplate StVZO	1		supply as per customer specification
	000 964 70 02		adhesive foil	1		for pos. 1a
2	000 938 18 71		label fuel filler	1		
3	000 938 22 65		label H12	1		
3	000 938 22 93		label	1		
3	000 938 20 37		label	1		
3	000 938 22 59		label H20	1		
4	-		label	1		supply as per customer specification
5	000 938 16 06		label op.ind/lever 5.1X88X88	1		
6	000 938 13 92		label oper.s/lever	1		single lever operation
7	000 938 16 25		label oper.s/shift 5.4X37X88	1		
8	000 938 18 67		label restriction symbol	1		
9	000 938 01 02		label	2		
10	000 938 13 85		label (information) 75X140	1		=>| 03/2006
11	000 938 18 43		label	1		for tyres front: 18x7-8/16PR rear: 18x7-8/16PR
12	000 938 18 12		label reference	1		
13	-		label lifting (capacity) for attachments-instrument	1		supply as per customer specification

1 = Packaged quantities 2 = Restricted availability 3 = Parts being phased out 4 = not available individually 5 = see separate list

https://truckmanualshub.com/

Pos.	Part-No.	I	Designation	Qantity	replaced by	Remarks
	000 964 70 03		adhesive foil (610260194)	1		to pos. 13
14	000 938 18 60		label contactor	1		
15	000 938 18 61		label (operating symbols)	1		single pedal operation
16	000 938 09 29	3	label	1	000 938 09 95	
16	000 938 09 95		label	1		
17	000 938 19 01		label 20 km/h	2		
18	000 938 06 23	1	text label Linde-250-9002	1	000 938 06 62	left
18	000 938 06 62		label text Linde-250-new-9002	1		left
18	000 938 06 24	3	label linde Linde-320-9002	1	000 938 06 63	right
18	000 938 06 63		label text Linde-320-new-9002	1		right
18	000 938 06 32		text label 45X200	1		left
18	000 938 06 28		text label 69X300	1		right
18	000 938 05 97		label text Fenwick-200-neu-9002	1		left
18	000 938 06 26	3	text label Fenwick-340-9002	1	000 938 31 05	right
18	000 938 31 05		label text Fenwick-340-new-9002	1		right
18	000 938 01 19	3	label	1	000 938 01 48	version driver's cab left door
18	000 938 01 48		label Linde left	1		version driver's cab left door
18	000 938 01 20	3	label	1	000 938 01 47	version driver's cab right door
18	000 938 01 47		label Linde right	1		version driver's cab right door
18	000 938 01 21		label	1		version driver's cab left door
18	000 938 01 22		label	1		version driver's cab right door
18	000 938 01 23		label	1		=>| 11/2002 version driver's cab left door

1 = Packaged quantities 2 = Restricted availability 3 = Parts being phased out 4 = not available individually 5 = see separate list

https://truckmanualshub.com/

Pos.	Part-No.	I	Designation	Qantity	replaced by	Remarks
18	000 938 01 24		label	1		=>| 11/2002 version driver's cab right door
19	000 938 06 30	3	transfer Linde-560-9002	1	000 938 06 65	version LPG
19	000 938 06 65		label text Linde-560-new-9002	1		version LPG
19	000 938 06 36		label text lansing 120X560	1		=>| 11/2002 version LPG
19	000 938 06 34		label text Fenwick-560-neu-9002	1		version LPG
20	000 938 06 23	3	text label Linde-250-9002	1	000 938 06 62	version particle filter
20	000 938 06 62		label text Linde-250-new-9002	1		version particle filter
20	000 938 06 27		text label 57X253	1		=>| 11/2002 version particle filter
20	000 938 06 25		label text Fenwick-270-neu-9002	1		version particle filter
21	000 938 06 22	3	label linde Linde-200-9002	2	000 938 06 61	version particle filter / StVZO
21	000 938 06 61		label text Linde-200-new-9002	2		version particle filter / StVZO
21	000 938 06 32		text label 45X200	2		=>| 11/2002 version particle filter / StVZO
21	000 938 05 97		label text Fenwick-200-neu-9002	2		version particle filter / StVZO
22	000 938 09 70	3	label	1	000 938 09 71	
22	000 938 09 71		label 101 db	1		
23	002 938 60 00		label warning	1		United Kingdom version
24	000 938 07 58		label tilting danger	1		
	000 938 09 83		label motor stop after cold start	1		=>| 02/2002 LPG
	-		label for mast no.	1		supply as per customer specification
	000 964 70 28		foil adhesive for label lift mast numbe	1		
	000 938 09 77		label panoramic mirror, tri-lingual	1		

1 = Packaged quantities 2 = Restricted availability 3 = Parts being phased out 4 = not available individually 5 = see separate list

https://truckmanualshub.com/

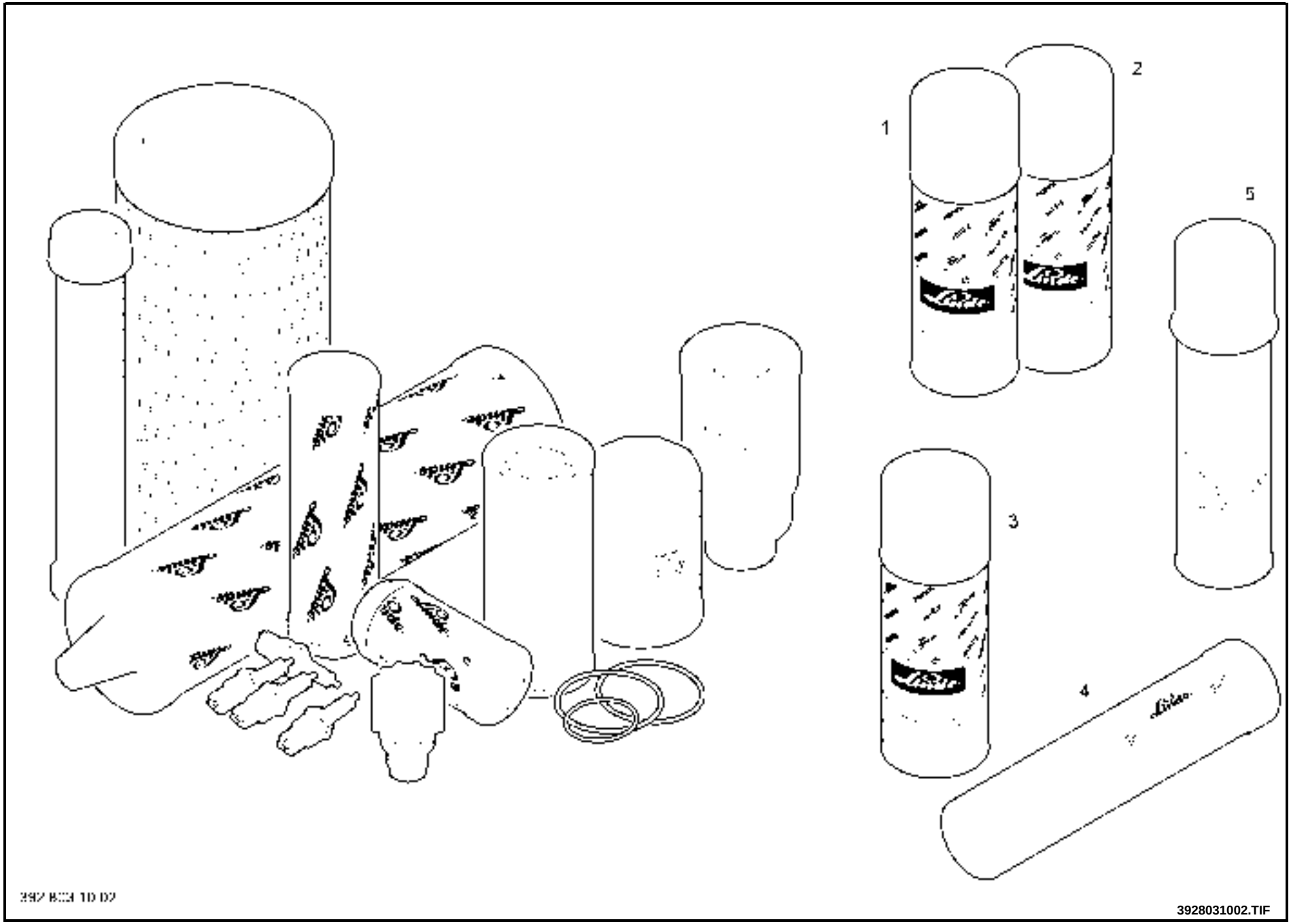

https://truckmanualshub.com/

OPERATING MATERIAL

Pos.	Part-No.	I	Designation	Qantity	replaced by	Remarks
	000 940 80 28		maintenance package	1		
	000 940 80 27		maintenance package	1		
1	7 2783 75 202		spray can RAL2002-400ml	1		400 ml vermilon
2	7 2783 75 721		spray can RAL7021-400ml	1		400 ml grey black
3	7 3263 00 602		chain spray LUBRICANT A167	1		
4	7 3374 75 140		lithium based grease DIN 51825	1		400 g
5	7 9896 05 000		spray testing device	1		400 ml version LPG

1 = Packaged quantities 2 = Restricted availability 3 = Parts being phased out 4 = not available individually 5 = see separate list

https://truckmanualshub.com/

BAG FOR TECHNICAL DOCUMENTATION

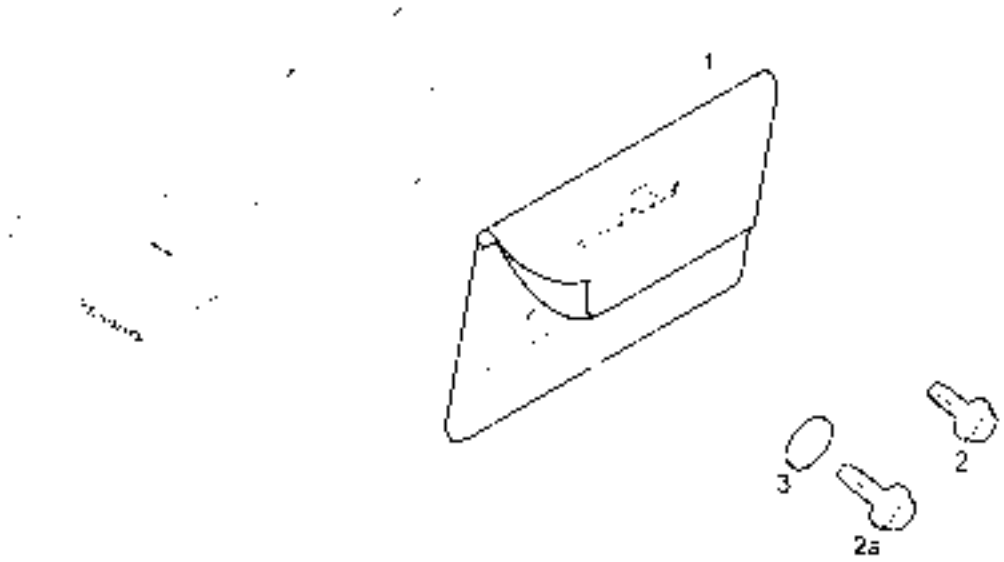

3868031003.TIF

https://truckmanualshub.com/

BAG FOR TECHNICAL DOCUMENTATION

Pos.	Part-No.	I	Designation	Qantity	replaced by	Remarks
1	7 7244 00 000		bag for documents	1		
2	9 008 610 126		hexagon head screw DIN 7500 DEM6x12-ST-A3B	2		

1 = Packaged quantities 2 = Restricted availability 3 = Parts being phased out 4 = not available individually 5 = see separate list