https://truckmanualshub.com/

Operator's Manual

Hydrostatic Lawn Tractor
MODEL 618

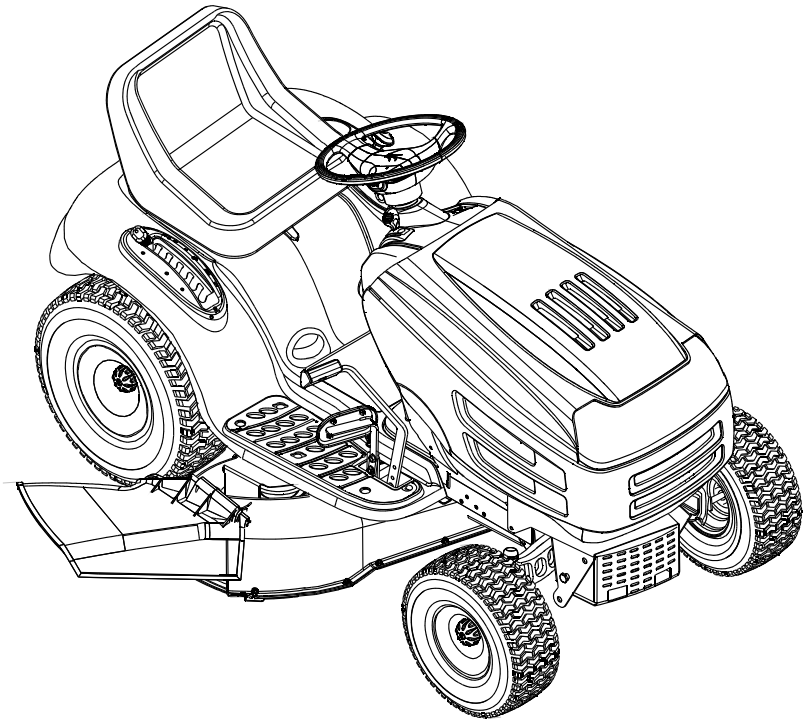

IMPORTANT: Read safety rules and instructions carefully before operating equipment.

Warning: This unit is equipped with an internal combustion engine and should not be used on or near any unimproved forest-covered, brush-covered or grass-covered land unless the engine's exhaust system is equipped with a spark arrester meeting applicable local or state laws (if any). If a spark arrester is used, it should be maintained in effective working order by the operator. In the State of California the above is required by law (Section 4442 of the California Public Resources Code). Other states may have similar laws. Federal laws apply on federal lands. A spark arrester for the muffler is available through your nearest engine authorized service dealer or contact the service department, P.O. Box 361131 Cleveland, Ohio 44136-9722.

MTD LLC, P.O. BOX 361131 CLEVELAND, OHIO 44136-9722

PRINTED IN U.S.A.

FORM NO. 770-10317D.
(11/25/2003)

https://truckmanualshub.com/

TABLE OF CONTENTS

Content	Page	Content	Page
Customer Support	2	Maintenance	21
Important Safe Operation Practices	3	Attachments & Accessories	27
Tractor Set-Up	8	Illustrated Parts List	30
Operation	11	Warranty	Back Cover
Making Adjustments	18		

FINDING MODEL NUMBER

This Operator's Manual is an important part of your new lawn tractor. It will help you assemble, prepare and maintain the unit for best performance. Please read and understand what it says.

STOP

Before you start assembling your new equipment, please locate the model plate under the seat of the tractor and copy the information in the space provided below. A sample model plate is also given below. This information will be necessary to use the manufacturer's web site and/or help from the Customer Support Department or an authorized service dealer.

MTD For A Growing World.
www.mtdproducts.com
MTD LLC
P. O. BOX 361131
CLEVELAND, OH 44136
330-220-4683
800-800-7310

Copy the model number here: _____

Copy the serial number here: _____

CUSTOMER SUPPORT

Please do NOT return the unit to the retailer from where it was purchased, without first contacting Customer Support.

If you have difficulty assembling this product or have any questions regarding the controls, operation or maintenance of this unit, you can seek help from the experts. Choose from the options below:

	Visit **mtdproducts.com** for many useful suggestions. Click on Customer Support button and you will get the four options reproduced here. Click on the appropriate button and help is immediately available. *The answer you are looking for could be just a mouse click away!* 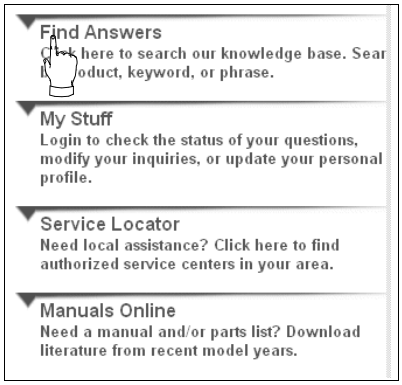 *The answer you are looking for could be just a mouse click away!*
	To reach the Customer Support Line, please call **1-800-800-7310**.
Engine Manual	The **engine** manufacturer is responsible for all engine-related issues with regards to performance, power-rating, specifications, warranty and service. Please refer to the engine manufacturer's Owner's/Operator's Manual, at the end of this manual, for more information.

https://truckmanualshub.com/

SECTION 1: IMPORTANT SAFE OPERATION PRACTICES

WARNING: This symbol points out important safety instructions which, if not followed, could endanger the personal safety and/or property of yourself and others. Read and follow all instructions in this manual before attempting to operate this machine. Failure to comply with these instructions may result in personal injury. When you see this symbol—heed its warning.

WARNING: The Battery and Engine Exhaust contains chemicals known to the State of California to cause cancer, birth defects or other reproductive harm. The battery and posts contain lead; wash hands after handling.

DANGER: This machine was built to be operated according to the rules for safe operation in this manual. As with any type of power equipment, carelessness or error on the part of the operator can result in serious injury. This machine is capable of amputating hands and feet and throwing objects. Failure to observe the following safety instructions could result in serious injury or death.

GENERAL OPERATION

1. Read, understand, and follow all instructions on the machine and in the manual(s) before attempting to assemble and operate. Keep this manual in a safe place for future and regular reference and for ordering replacement parts.
2. Be familiar with all controls and their proper operation. Know how to stop the machine and disengage them quickly.
3. Never allow children under 14 years old to operate this machine. Children 14 years old and over should read and understand the operation instructions and safety rules in this manual and should be trained and supervised by a parent.
4. Never allow adults to operate this machine without proper instruction.
5. To help avoid blade contact or a thrown object injury, keep bystanders, helpers, children and pets at least 75 feet from the machine while it is in operation. Stop machine if anyone enters the area.
6. Thoroughly inspect the area where the equipment is to be used. Remove all stones, sticks, wire, bones, toys, and other foreign objects which could be picked up and thrown by the blade(s). Thrown objects can cause serious personal injury.
7. Plan your mowing pattern to avoid discharge of material toward roads, sidewalks, bystanders and the like. Also, avoid discharging material against a wall or obstruction which may cause discharged material to ricochet back toward the operator.
8. Always wear safety glasses or safety goggles during operation and while performing an adjustment or repair to protect your eyes. Thrown objects which ricochet can cause serious injury to the eyes.
9. Wear sturdy, rough-soled work shoes and close-fitting slacks and shirts. Loose fitting clothes and jewelry can be caught in movable parts. Never operate this machine in bare feet or sandals.
10. Be aware of the mower and attachment discharge direction and do not point it at anyone. Do not operate the mower without the discharge cover or entire grass catcher in its proper place.
11. Do not put hands or feet near rotating parts or under the cutting deck. Contact with the blade(s) can amputate hands and feet.
12. A missing or damaged discharge cover can cause blade contact or thrown object injuries.
13. Stop the blade(s) when crossing gravel drives, walks, or roads and while not cutting grass.
14. Watch for traffic when operating near or crossing roadways. This machine is not intended for use on any public roadway.
15. Do not operate the machine while under the influence of alcohol or drugs.
16. Mow only in daylight or good artificial light.
17. Never carry passengers.
18. Disengage blade(s) before shifting into reverse. Back up slowly. Always look down and behind before and while backing to avoid a back-over accident.
19. Slow down before turning. Operate the machine smoothly. Avoid erratic operation and excessive speed.
20. Disengage blade(s), set parking brake, stop engine and wait until the blade(s) come to a complete stop before removing grass catcher, emptying grass, unclogging chute, removing any grass or debris, or making any adjustments.
21. Never leave a running machine unattended. Always turn off blade(s), place transmission in neutral, set parking brake, stop engine and remove key before dismounting.
22. Use extra care when loading or unloading the machine into a trailer or truck. This unit should not be driven up or down ramp(s), because the unit could tip over, causing serious personal injury. The unit must be pushed manually on ramp(s) to load or unload properly.

https://truckmanualshub.com/

23. Muffler and engine become hot and can cause a burn. Do not touch.
24. Check overhead clearances carefully before driving under low hanging tree branches, wires, door openings etc., where the operator may be struck or pulled from the unit, which could result in serious injury.
25. Disengage all attachment clutches, depress the brake pedal completely and shift into neutral before attempting to start engine.
26. Your machine is designed to cut normal residential grass of a height no more than 10”. Do not attempt to mow through unusually tall, dry grass (e.g., pasture) or piles of dry leaves. Dry grass or leaves may contact the engine exhaust and/or build up on the mower deck presenting a potential fire hazard.
27. Use only accessories and attachments approved for this machine by the machine manufacturer. Read, understand and follow all instructions provided with the approved accessory or attachment.
28. Data indicates that operators, age 60 years and above, are involved in a large percentage of riding mower-related injuries. These operators should evaluate their ability to operate the riding mower safely enough to protect themselves and others from serious injury.
29. If situations occur which are not covered in this manual, use care and good judgment. Contact an authorized MTD service dealer for assistance.

SLOPE OPERATION

Slopes are a major factor related to loss of control and tip-over accidents which can result in severe injury or death. All slopes require extra caution. If you cannot back up the slope or if you feel uneasy on it, do not mow it.

For your safety, use the slope gauge included as part of this manual to measure slopes before operating this unit on a sloped or hilly area. If the slope is greater than 15 degrees as shown on the slope gauge, do not operate this unit on that area or serious injury could result.

DO:

1. Mow up and down slopes, not across. Exercise extreme caution when changing direction on slopes.
2. Watch for holes, ruts, bumps, rocks, or other hidden objects. Uneven terrain could overturn the machine. Tall grass can hide obstacles.
3. Use slow speed. Choose a low enough speed setting so that you will not have to stop or shift while on the slope. Tires may lose traction on slopes even though the brakes are functioning properly. Always keep machine in gear when going down slopes to take advantage of engine braking action.
4. Follow the manufacturer’s recommendations for wheel weights or counterweights to improve stability.
5. Use extra care with grass catchers or other attachments. These can change the stability of the machine.
6. Keep all movement on the slopes slow and gradual. Do not make sudden changes in speed or direction. Rapid engagement or braking could cause the front of the machine to lift and rapidly flip over backwards which could cause serious injury.
7. Avoid starting or stopping on a slope. If tires lose traction, disengage the blade(s) and proceed slowly straight down the slope.

DO NOT:

1. Do not turn on slopes unless necessary; then, turn slowly and gradually downhill, if possible.
2. Do not mow near drop-offs, ditches or embankments. The mower could suddenly turn over if a wheel is over the edge of a cliff, ditch, or if an edge caves in.
3. Do not try to stabilize the machine by putting your foot on the ground.
4. Do not use a grass catcher on steep slopes.
5. Do not mow on wet grass. Reduced traction could cause sliding.
6. Do not shift to neutral and coast downhill. Over-speeding may cause the operator to lose control of the machine resulting in serious injury or death.
7. Do not tow heavy pull behind attachments (e.g. loaded dump cart, lawn roller, etc.) on slopes greater than 5 degrees. When going down hill, the extra weight tends to push the tractor and may cause you to loose control. (e.g. tractor may speed up, braking and steering ability are reduced, attachment may jack-knife and cause tractor to overturn).

CHILDREN

1. Tragic accidents can occur if the operator is not alert to the presence of children. Children are often attracted to the machine and the mowing activity. They do not understand the dangers. Never assume that children will remain where you last saw them.
    a. Keep children out of the mowing area and in watchful care of a responsible adult other than the operator.
    b. Be alert and turn machine off if a child enters the area.

c. Before and while backing, look behind and down for small children.
d. Never carry children, even with the blade(s) shut off. They may fall off and be seriously injured or interfere with safe machine operation.
e. Use extreme care when approaching blind corners, doorways, shrubs, trees or other objects that may block your vision of a child who may run into the machine.
f. Disengage the cutting blade(s) before shifting in reverse. The “No-Cut-In Reverse” feature is a reminder not to cut in reverse and to help avoid back over accidents. Do not defeat it.
g. Keep children away from hot or running engines. They can suffer burns from a hot muffler.
h. Remove key when machine is unattended to prevent unauthorized operation.

9. Never allow children under 14 years old to operate the machine. Children 14 years old and over should read and understand the operation instructions and safety rules in this manual and should be trained and supervised by a parent.

TOWING

1. Tow only with a machine that has a hitch designed for towing. Do not attach towed equipment except at the hitch point.
2. Follow the manufacturers recommendation for weight limits for towed equipment and towing on slopes.
3. Never allow children or others in or on towed equipment.
4. On slopes, the weight of the towed equipment may cause loss of traction and loss of control.
5. Travel slowly and allow extra distance to stop.
6. Do not shift to neutral and coast downhill.

SERVICE

SAFE HANDLING OF GASOLINE:

1. **To avoid personal injury or property damage** use extreme care in handling gasoline. **Gasoline is** extremely flammable and the vapors are explosive**.** Serious personal injury can occur when gasoline is spilled on yourself or your clothes which can ignite. Wash your skin and change clothes immediately.
   a. Use only an approved gasoline container.
   b. Never fill containers inside a vehicle or on a truck or trailer bed with a plastic liner. Always place containers on the ground away from your vehicle before filling.
   c. When practical, remove gas-powered equipment from the truck or trailer and refuel it on the ground. If this is not possible, then refuel such equipment on a trailer with a portable container, rather than from a gasoline dispenser nozzle.
   d. Keep the nozzle in contact with the rim of the fuel tank or container opening at all times until fueling is complete. Do not use a nozzle lock-open device.
   e. Extinguish all cigarettes, cigars, pipes and other sources of ignition.
   f. Never fuel machine indoors.
   g. Never remove gas cap or add fuel while the engine is hot or running. Allow engine to cool at least two minutes before refueling.
   h. Never over fill fuel tank. Fill tank to no more than ½ inch below bottom of filler neck to allow space for fuel expansion.
   i. Replace gasoline cap and tighten securely.
   j. If gasoline is spilled, wipe it off the engine and equipment. Move unit to another area. Wait 5 minutes before starting the engine.
   k. To reduce fire hazards, keep machine free of grass, leaves, or other debris build-up. Clean up oil or fuel spillage and remove any fuel soaked debris.
   l. Never store the machine or fuel container inside where there is an open flame, spark or pilot light as on a water heater, space heater, furnace, clothes dryer or other gas appliances.
   m. Allow a machine to cool at least 5 minutes before storing.

GENERAL SERVICE:

1. Never run an engine indoors or in a poorly ventilated area. Engine exhaust contains carbon monoxide, an odorless, and deadly gas.
2. Before cleaning, repairing, or inspecting, make certain the blade(s) and all moving parts have stopped. Disconnect the spark plug wire and ground against the engine to prevent unintended starting.
3. Periodically check to make sure the blades come to complete stop within approximately (5) five seconds after operating the blade disengagement control. If the blades do not stop within the this time frame, your unit should be serviced professionally by an authorized *MTD* Service dealer.
4. Check brake operation frequently as it is subjected to wear during normal operation. Adjust and service as required.
5. Check the blade(s) and engine mounting bolts at frequent intervals for proper tightness. Also, visually inspect blade(s) for damage (e.g., excessive wear, bent, cracked).

https://truckmanualshub.com/

6. Replace the blade(s) with the original equipment manufacturer's (O.E.M.) blade(s) only, listed in this manual. "Use of parts which do not meet the original equipment specifications may lead to improper performance and compromise safety!"
7. Mower blades are sharp. Wrap the blade or wear gloves, and use extra caution when servicing them.
8. Keep all nuts, bolts, and screws tight to be sure the equipment is in safe working condition.
9. Never tamper with the safety interlock system or other safety devices. Check their proper operation regularly.
10. After striking a foreign object, stop the engine, disconnect the spark plug wire(s) and ground against the engine. Thoroughly inspect the machine for any damage. Repair the damage before starting and operating.
11. Never attempt to make adjustments or repairs to the machine while the engine is running.
12. Grass catcher components and the discharge cover are subject to wear and damage which could expose moving parts or allow objects to be thrown. For safety protection, frequently check components and replace immediately with original equipment manufacturer's (O.E.M.) parts only, listed in this manual. "Use of parts which do not meet the original equipment specifications may lead to improper performance and compromise safety!"
13. Do not change the engine governor settings or over-speed the engine. The governor controls the maximum safe operating speed of the engine.
14. Maintain or replace safety and instruction labels, as necessary.
15. Observe proper disposal laws and regulations for gas, oil, etc. to protect the environment.

WARNING: YOUR RESPONSIBILITY Restrict the use of this power machine to persons who read, understand and follow the warnings and instructions in this manual and on the machine.

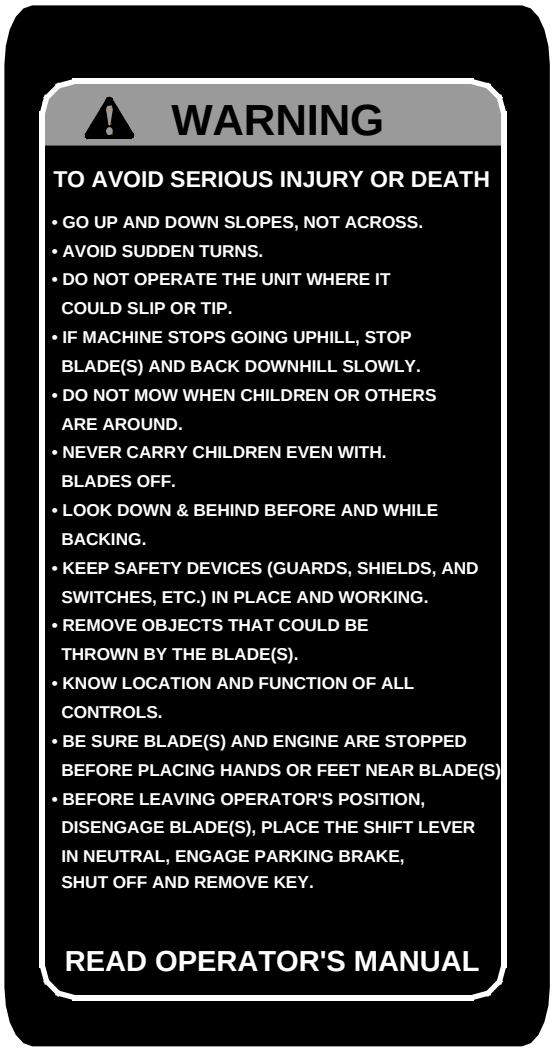

https://truckmanualshub.com/

SECTION 2: SLOPE GAUGE

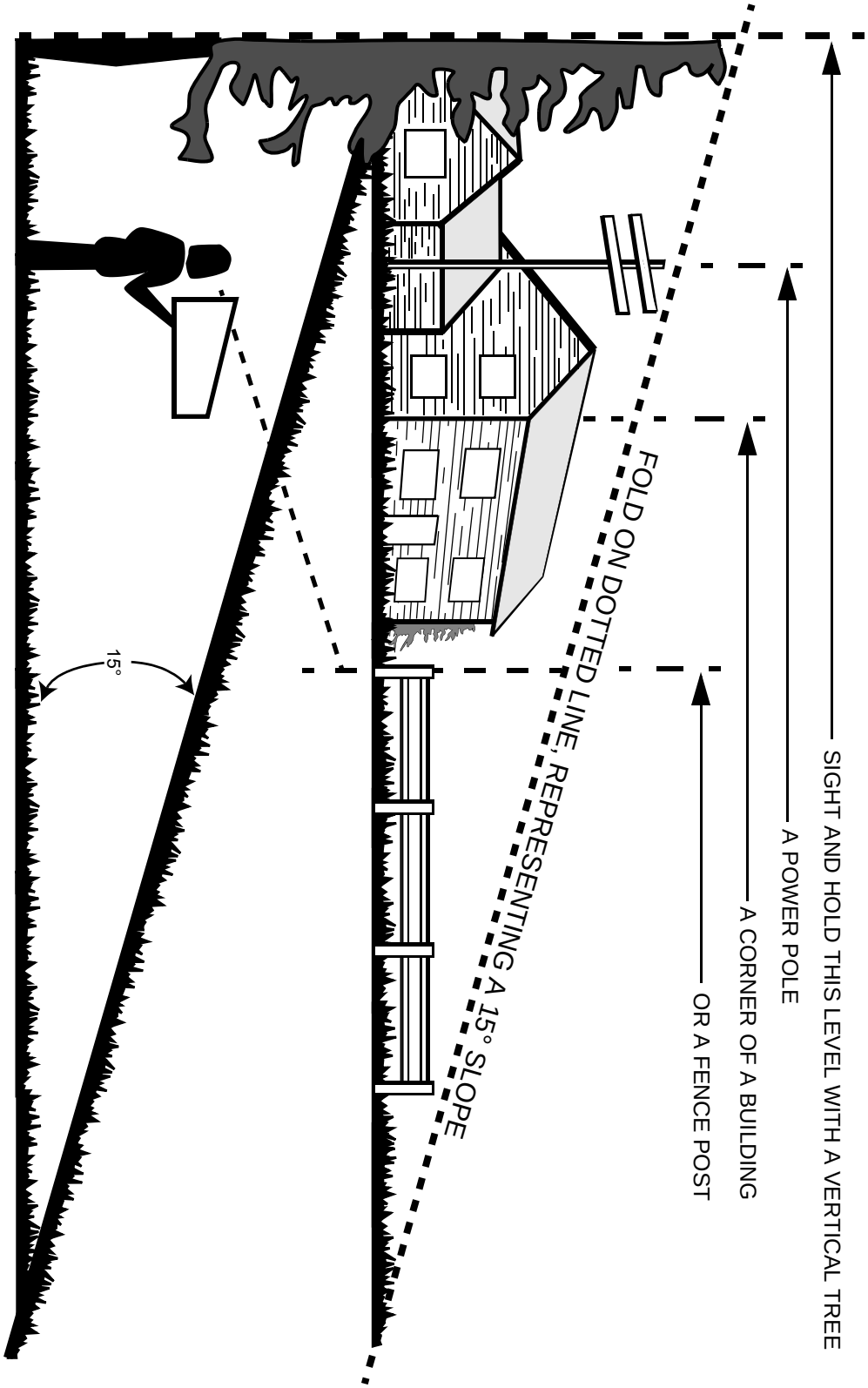

WARNING

Do not mow on inclines with a slope in excess of 15 degrees (a rise of approximately 2-1/2 feet every 10 feet). A riding mower could overturn and cause serious injury. If operating a walk-behind mower on such a slope, it is extremely difficult to maintain your footing and you could slip, resulting in serious injury.
Operate RIDING mowers up and down slopes, never across the face of slopes.

https://truckmanualshub.com/

SECTION 3: TRACTOR SET-UP

Attaching the Battery Cables

NOTE: *The positive battery terminal is marked Pos. (+). The negative battery terminal is marked Neg. (–).*

- The positive cable (heavy red wire) is secured to the positive battery terminal (+) with a hex bolt and hex nut at the factory. Make certain that the rubber boot covers the terminal to help protect it from corrosion.
- Remove the hex bolt and wing nut from the negative cable.
- Remove the black plastic cover, if present, from the negative battery terminal and attach the negative cable (heavy black wire) to the negative battery terminal (–) with the bolt and wing nut.
- Make certain the hold-down strap is in position over the battery, securing it in place. See Figure 1.

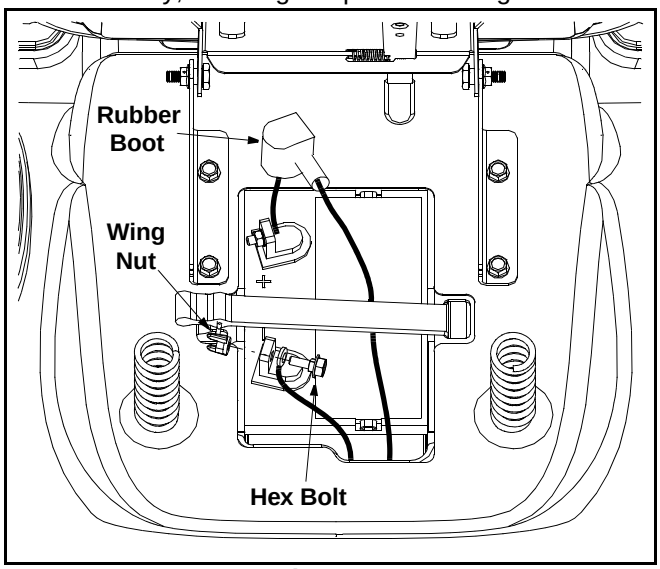

Figure 1

NOTE: *If the battery is put into service after the date shown on top of battery, charge the battery as instructed* on *page 23 of this manual prior to operating the tractor.*

Attaching The Steering Wheel

- The hardware for attaching the steering wheel has been packed within the steering wheel, beneath steering wheel cap. Carefully pry off the steering wheel cap and remove the hardware.

NOTE: *There are two different styles of steering wheel cap. See Figure 2.* ***Styles vary by model.***

- **With the wheels of the tractor pointing straight forward,** place the steering wheel over the steering shaft.
- Place the washer (with the cupped side down) over the steering shaft and secure with the hex bolt. See Figure 2.
- Place the steering wheel cap over the center of the steering wheel and push downward until it “clicks” into place.

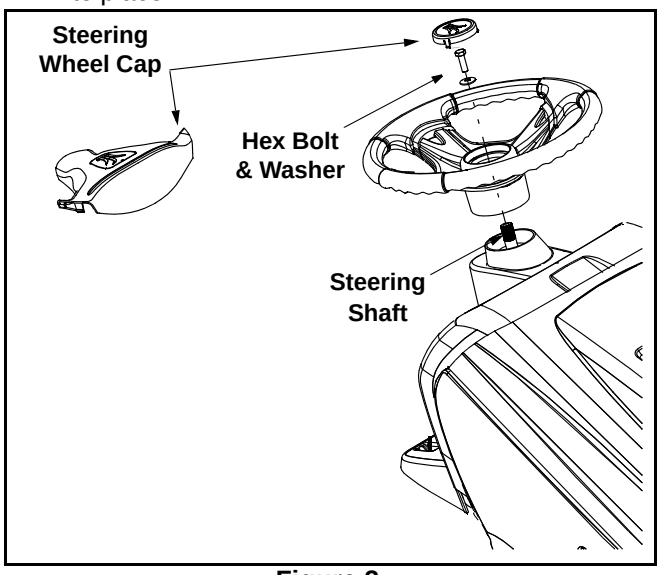

Figure 2

https://truckmanualshub.com/

Attaching The Seat

Seat styles vary by tractor model and there are three different styles available:

- Standard Adjustment
- Quick Adjustment &
- Knob Adjustment

Refer to Figure 3, Figure 4 and Figure 5 to identify which your tractor's seat style and follow applicable instructions below.

NOTE: *For shipping reasons, seats are either fastened to the tractor seat's pivot bracket with a plastic tie, or mounted backward to the pivot bracket. In either case, free the seat form its shipping position and remove the two* ***hex*** *screws (or knobs, on models so equipped) from the bottom of seat before proceeding with applicable instructions below.*

Standard Adjustment Seat

1. Position the shoulder screws (found on the base of the seat) inside the slot openings in the seat pivot bracket. Figure 3.
2. Slide the seat slightly rearward in the seat pivot bracket, lining up the rear slots in the pivot bracket with the remaining two holes in the seat's base.
3. Select desired position for the seat, and secure with the two hex screws removed earlier. See Figure 3.

Quick Adjustment Seat

NOTE: *If your seat was shipped mounted backwards on the seat pivot bracket, pull out the tab found on the seat stop and hold it open while sliding the seat off the seat pivot bracket. See Figure 4.*

1. Line up the plastic seat spacers with the slots in seat pivot bracket.
2. Slide seat in until front seat spacer engages the seat stop. See Figure 4.

WARNING: Before operating this machine, make sure the seat is engaged in the seat stop, stand behind the machine and pull back on seat until fully engaged into stop.

Knob Adjustment Seat

1. Position the shoulder screws (found on the base of the seat) inside the slot openings in the seat pivot bracket. Figure 5.
2. Slide the seat slightly rearward in the seat pivot bracket, lining up the rear slots in the pivot bracket with the remaining two holes in the seat's base.
3. Select desired position for the seat, and secure with the two knobs removed earlier. See Figure 5.

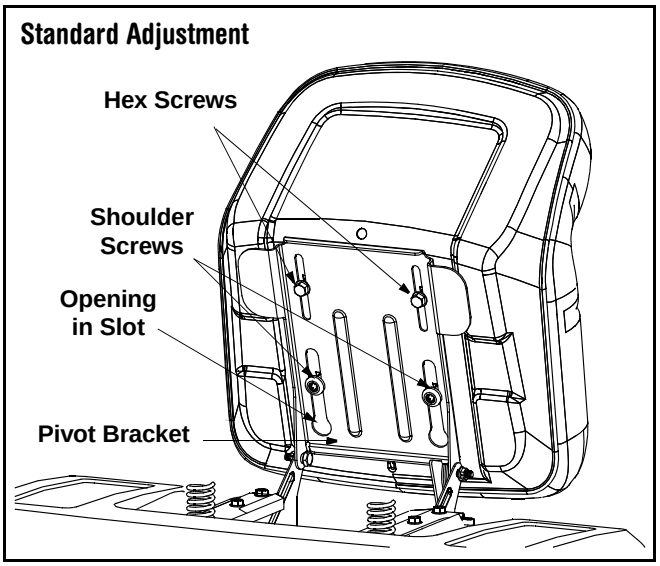

Figure 3

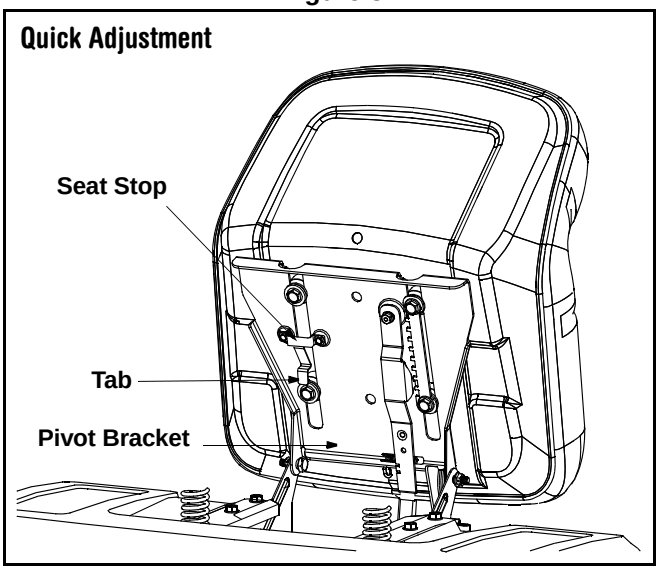

Figure 4

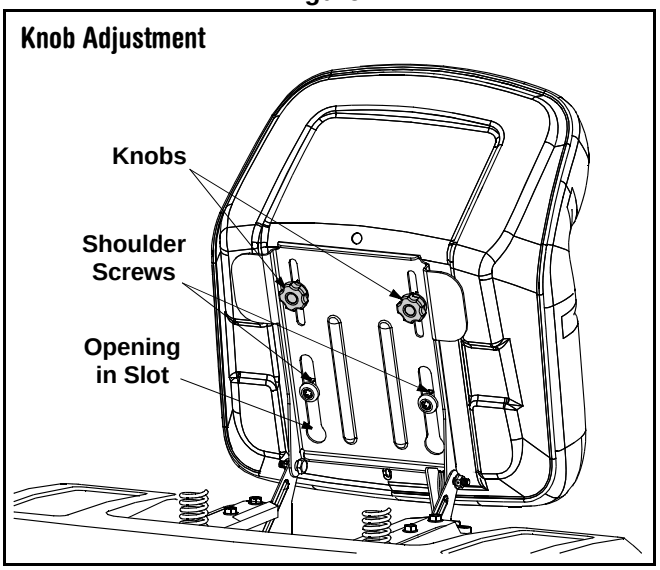

Figure 5

https://truckmanualshub.com/

Gas and Oil Fill-up

The gasoline tank is located under the hood and has a capacity of either two or three gallons. Do not overfill.

WARNING: Use extreme care when handling gasoline. Gasoline is extremely flammable and the vapors are explosive. Never fuel machine indoors or while the engine is hot or running. Extinguish cigarettes, cigars, pipes, and other sources of ignition.

Service the engine with gasoline and oil as instructed in the separate *Briggs & Stratton* Operator/Owner Manual (or *Kohler* engine's Owner's Manual) packed with your tractor. Read instructions carefully.

IMPORTANT: Your tractor is shipped with motor oil in the engine. However, you **MUST** check the oil level before operating. Be careful not to overfill.

Shipping Brace Removal

WARNING: Make sure the riding mower's engine is off, set the parking brake and remove the ignition key before removing the shipping brace.

- Locate the shipping brace and warning tag found on the right side of the cutting deck. See Figure 6.

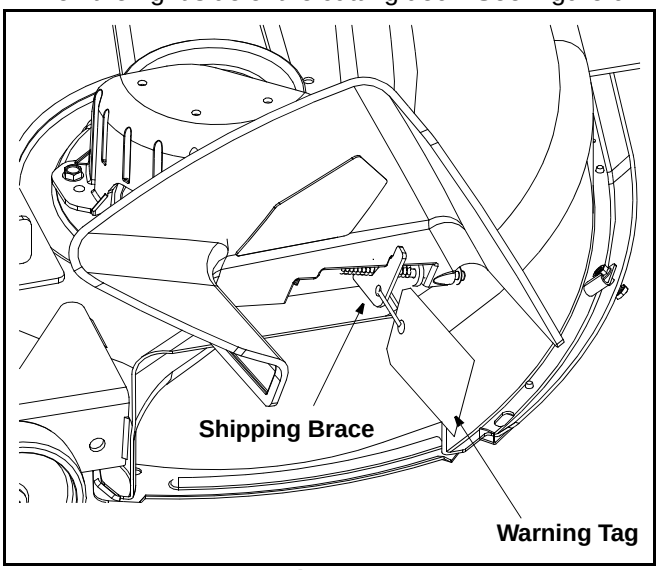

Figure 6

- While holding the discharge chute with your left hand, remove the shipping brace with your right hand by grasping it between your thumb and index finger and rotating it clockwise.

WARNING: The shipping brace, used for packaging purposes only, must be removed and discarded before operating your riding mower.

WARNING: The mowing deck is capable of throwing objects. Failure to operate the riding mower without the discharge cover in the proper operating position could result in serious personal injury and/or property damage.

Tire Pressure

WARNING: Maximum tire pressure under any circumstances is 30 psi. Equal tire pressure should be maintained at all times.

The tires on your unit may be over-inflated for shipping purposes. Reduce the tire pressure before operating the tractor. Recommended operating tire pressure is approximately 10 p.s.i for the rear tires & 14 p.s.i. for the front tires. Check sidewall of tire for maximum p.s.i.

Identifying the Mulch Plug (if so equipped)

On tractor models with a 42-inch deck so equipped, a mulch plug can be found within the cutting deck's discharge opening.

NOTE: *Refer to* **Mulching** *on page 17 for more detailed information.*

If you'd prefer to operate the cutting deck without mulching, simply remove the mulch plug by unthreading the plastic wing nut which fastens it to the cutting deck. This will allow the clippings to discharge out of the discharge opening during operation. See Figure 7.

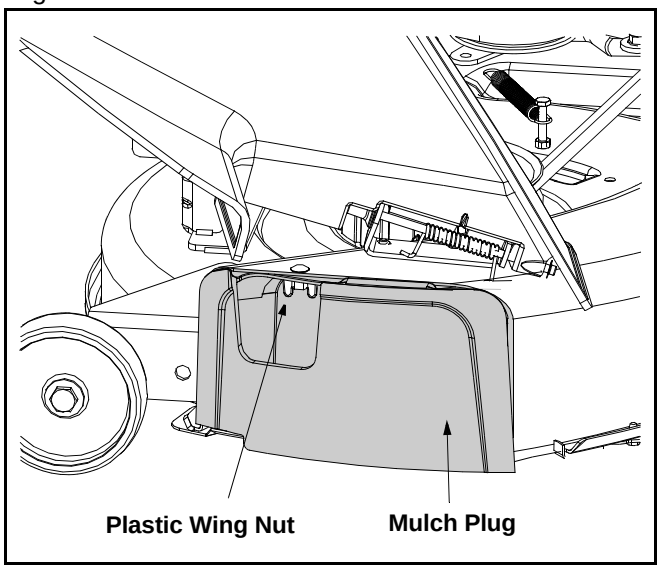

Figure 7

https://truckmanualshub.com/

SECTION 4: KNOW YOUR LAWN TRACTOR

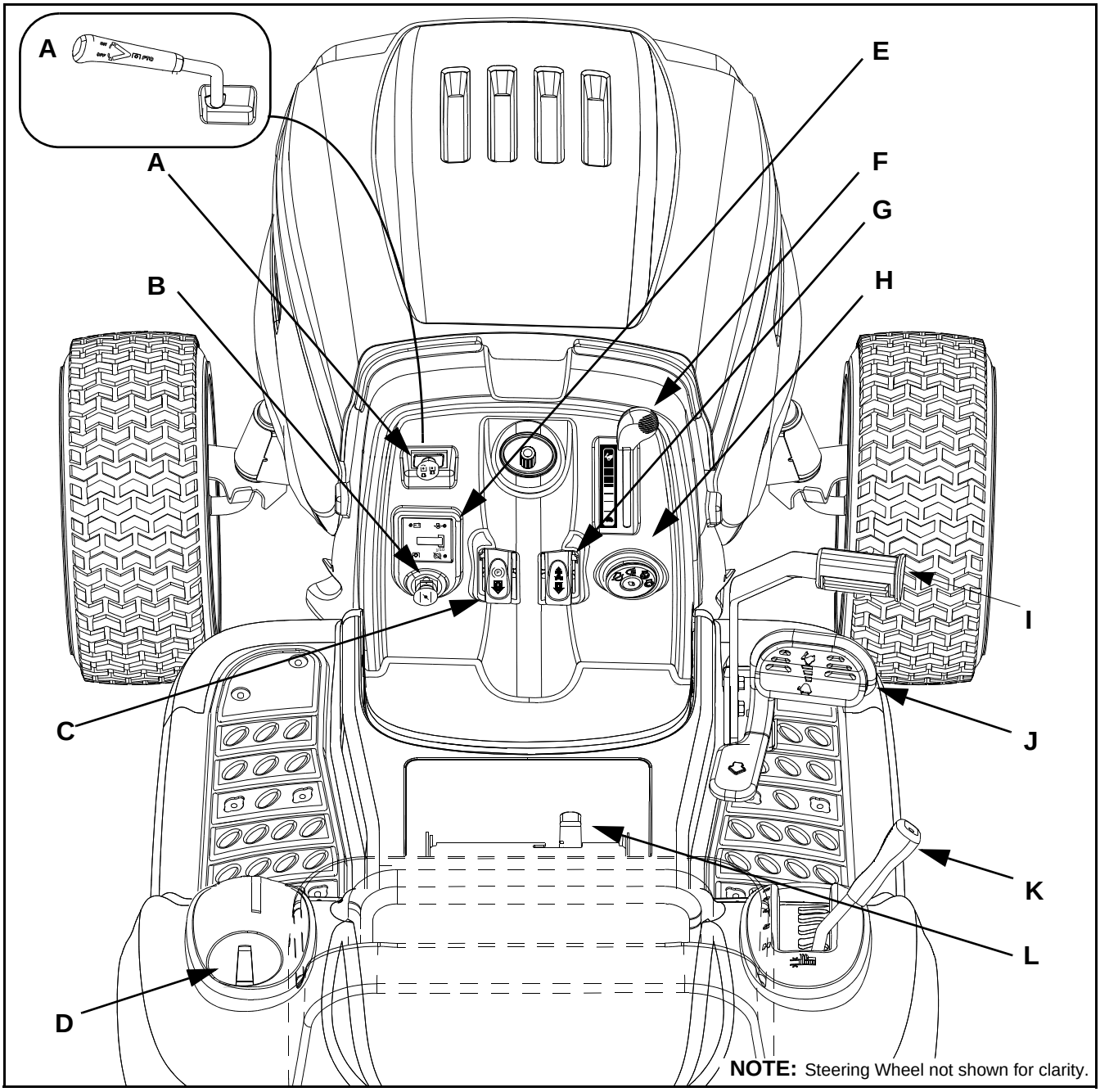

† Style varies by model
‡ If so equipped

A PTO (Power Take-off) Lever‡
PTO (Power Take-off) Knob‡
B Choke Control‡
C Parking Brake Button
D Cup Holder‡
E Systems Indicator Monitor†
F Throttle Control Lever
G Cruise Control Button‡
H Ignition Switch
I Brake Pedal
J Drive Pedal
K Deck Lift Lever
L Seat Adjustment Lever‡

NOTE: *Any reference in this manual to the RIGHT or LEFT side of the tractor is observed from operator's position.*

https://truckmanualshub.com/

Throttle Control Lever

The throttle control lever is located on the right side of the tractor's dash panel. This lever controls the speed of the engine and, on some models, when pushed all the way forward, the choke control also. When set in a given position, the throttle will maintain a uniform engine speed. See Figure 8.

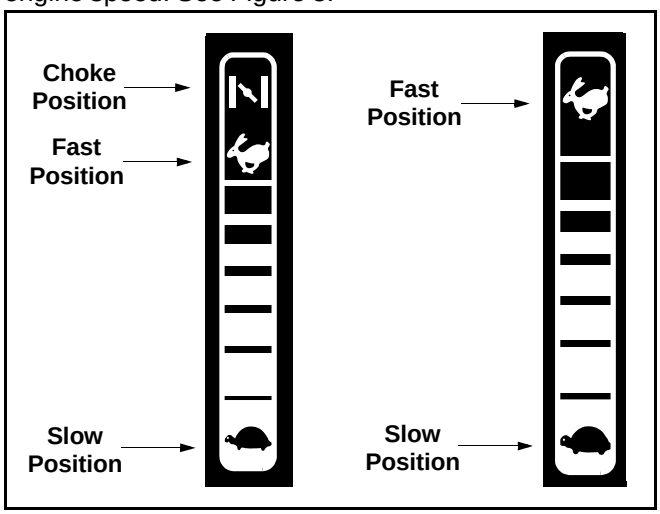

Figure 8

IMPORTANT: When operating the tractor with the cutting deck engaged, be certain that the throttle lever is **always** in the FAST (rabbit) position.

Choke Control

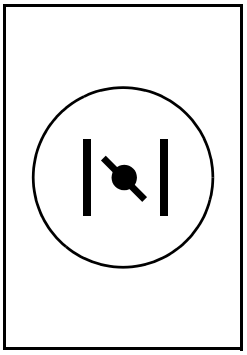

On some models, moving the throttle lever all the way forward activates the engine's choke control. On all other models, the choke control can be found on the left side of the dash panel and is activated by pulling the knob outward. Activating the choke control closes the choke plate on the carburetor and aids in starting the engine. Refer to **Starting The Engine** on page 15 of this manual for detailed starting instructions.

Brake Pedal

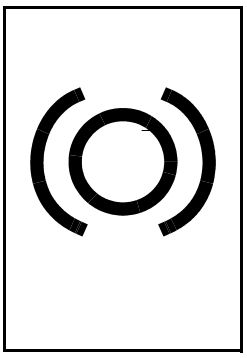

The brake pedal is located on the right front side of the tractor above the drive pedal along the running board. The brake pedal can be used for sudden stops or setting the parking brake.

NOTE: *The brake pedal must be fully depressed to activate the safety interlock switch when starting the tractor.*

Ignition Switch

WARNING: Never leave a running machine unattended. Always disengage PTO, move shift lever into neutral position, set parking brake, stop engine and remove key to prevent unintended starting.

To start the engine, insert the key into the ignition switch and turn clockwise to the **START** position. Release the key into the **ON** position once engine has fired. See Figure 9.

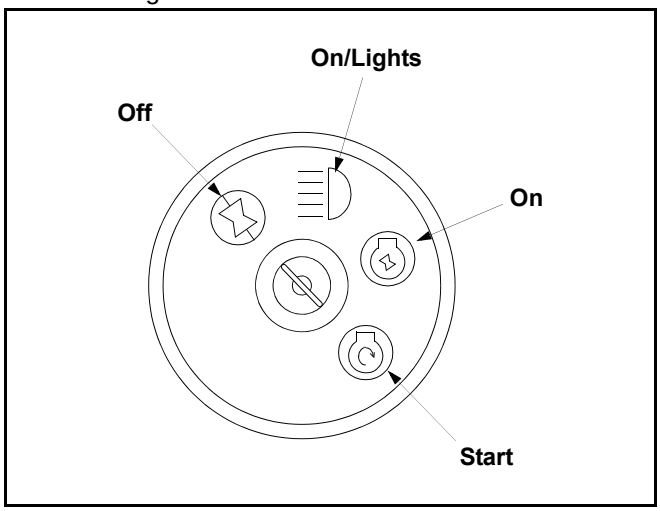

Figure 9

Refer to **Starting The Engine** on page 15 of this manual for detailed starting instructions

The ignition switch is also used to operate the tractor's headlights. Refer to **Operating The Headlights** on page 18 of this manual for detailed instructions.

Drive Pedal

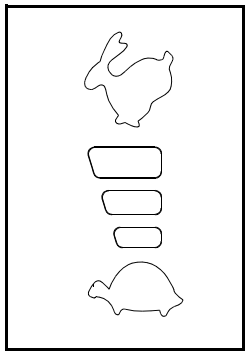

The drive pedal is located below the brake pedal on the right front side of the tractor along the running board. Depress the upper portion of the drive pedal forward to cause the tractor to travel forward. Depress the lower portion of the drive pedal with the ball of your right foot (NOT your heel) to cause the tractor to travel in reverse. Ground speed is also controlled with the drive pedal. The further forward or rearward that the pedal is pivoted, the faster the tractor will travel. The pedal will return to its original position when it's not depressed.

IMPORTANT: Always set the parking brake when leaving the tractor unattended.

https://truckmanualshub.com/

Systems Indicator Monitor

Your tractor is equipped with either an hour meter or an ammeter as part of two available systems indicator monitors. Locate the monitor on the left side of your dash panel and compare it to both shown in Figure 10.

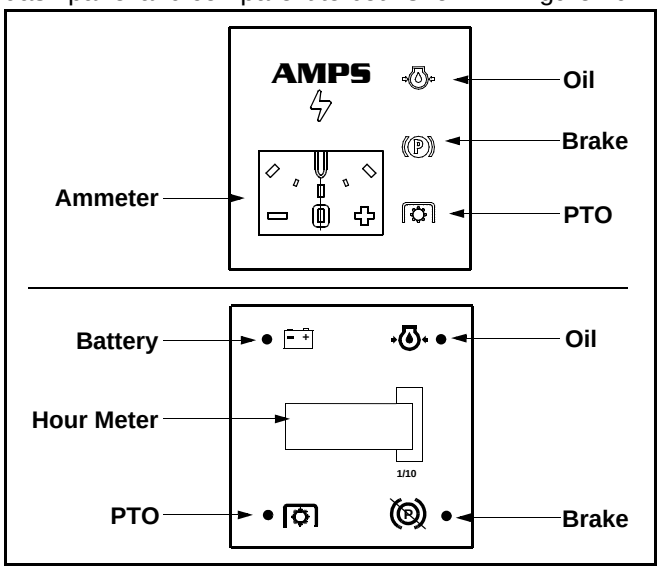

Figure 10

If the Brake light or PTO light illuminates when attempting to start the unit, proceed as follows:

BRAKE — Depress the brake pedal.

PTO — Move PTO lever, or PTO knob into the disengaged (OFF) position.

It is normal for the Oil light and the Battery light, if so equipped, to illuminate while the engine is **cranking**, but if either illuminate's **while the engine is running**, proceed as follows:

OIL— Stop the tractor immediately and check the crankcase oil level as instructed in the Briggs *& Stratton* Operator/Owner Manual (or *Kohler* engine's Owner's Manual) included with your tractor.

BATTERY— The battery is in need of a charge, or the engine's charging system is not generating sufficient amperage. Refer to the **MAINTENANCE** section of this manual for the proper battery charging procedure or have the charging system checked by a *Briggs & Stratton* or *Kohler* engine's dealer.

On units so equipped, **the ammeter** measures the electrical output of the engine's charging system. Under normal operating conditions, with the engine at full throttle, the ammeter's needle should measure a positive charge.

The **hour meter**, on units so equipped, operates whenever the engine is running and records the actual hours of tractor operation.

Electric PTO (Power Take-off) Knob

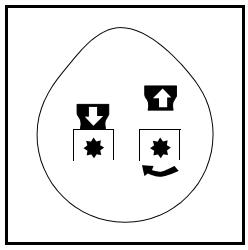

To engage the power to the cutting deck or other (separately available) attachments on models equipped with an electric PTO, pull outward on the PTO knob. Push the PTO knob inward to disengage the power to the cutting deck.

NOTE: *The PTO knob **must** be in the disengaged (OFF) position when starting the engine, when traveling in reverse and if the operator leaves the seat.*

PTO (Power Take-off) Lever

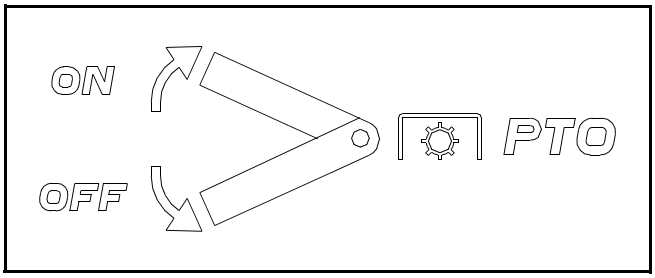

On models equipped with a manual PTO, the PTO lever is located on the left side of the dashboard next to the steering wheel. Move the PTO lever forward to engage the power to the cutting deck or other (separately available) attachments; move the PTO lever rearward to disengage the power to the attachments.

NOTE: *The PTO lever **must** be in the disengaged (OFF) position when starting the engine, when traveling in reverse and if the operator leaves the seat.*

Seat Adjustment Lever

To adjust the seat forward or backward on units equipped with a quick-adjust seat, slide the seat adjustment lever to the left and reposition the seat to the desired position. Once a comfortable position is found, release the seat adjustment lever to lock the seat in place. Refer to **Seat Adjustment** on page 19 of this manual for more detailed instructions.

Deck Lift Lever

Found on your tractor's right fender, the deck lift lever is used to change the height of the cutting deck. To use, move the lever to the left, then place in the notch best suited for your application.

Cup Holder

The tractor's cup holder, if so equipped, is located on the fender to the left of the seat, just to the rear of the shift lever.

https://truckmanualshub.com/

Parking Brake Button

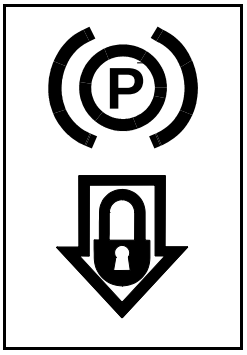

To set the parking brake, fully depress the brake pedal and push the parking brake button in. Hold the button in while taking your foot off the brake pedal. Both the parking button and the brake pedal will then stay depressed. To release the parking brake, depress the brake pedal slightly. The parking brake button will then return to its original position.

NOTE: *The parking brake must be set if the operator leaves the seat with the engine running or the engine will automatically shut off.*

IMPORTANT: Always set the parking brake when leaving the tractor unattended.

Cruise Control Button

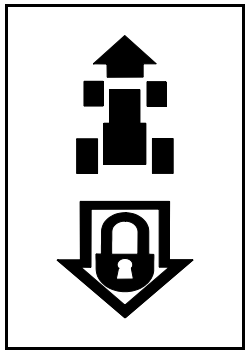

The cruise control button, on models so equipped, is located on the tractor dash panel to the left of the ignition switch. Push the cruise control button while traveling forward at a desired speed. While holding the button in, release pressure from the drive pedal. This will engage the cruise control and allow the tractor to remain at that speed without applying pressure to the drive pedal. Depress the brake pedal or the drive pedal to deactivate cruise control. Refer to **Setting the Cruise Control** on page 16 this manual for detailed instructions regarding the cruise control feature.

NOTE: *Cruise control can NOT be engaged at the tractor's fastest ground speed. If the operator should attempt to do so, the tractor will automatically decelerate to the fastest optimal mowing ground speed.*

SECTION 5: OPERATING YOUR LAWN TRACTOR

WARNING: Read, understand, and follow all instructions and warnings on the machine and in this manual before operating.

Safety Interlock Switches

This tractor is equipped with a safety interlock system for the protection of the operator. If the interlock system should ever malfunction, do not operate the tractor. Contact an authorized MTD service dealer. The safety interlock prevents the engine from cranking or starting unless the parking brake is engaged, and the PTO knob (or lever) is in the disengaged (OFF) position.

- The engine will automatically shut off if the operator leaves the seat before engaging the parking brake.
- The engine will automatically shut off if the operator leaves the tractor's seat with the PTO knob (or lever) in the engaged (ON) position, regardless of whether the parking brake is engaged.
- The engine will automatically shut off if the PTO lever is moved into the engaged (ON) position with the drive pedal in position for reverse travel.
- The electric PTO clutch, if so equipped, will automatically shut off if the PTO knob is moved into the engaged (ON) position with the drive pedal in position for reverse travel.

WARNING: Do not operate the tractor if the interlock system is malfunctioning. This system was designed for your safety and protection.

WARNING

AVOID SERIOUS INJURY OR DEATH

- GO UP AND DOWN SLOPES, NOT ACROSS.
- AVOID SUDDEN TURNS.
- DO NOT OPERATE THE UNIT WHERE IT COULD SLIP OR TIP.
- IF MACHINE STOPS GOING UPHILL, STOP BLADE(S) AND BACK DOWNHILL SLOWLY.
- DO NOT MOW WHEN CHILDREN OR OTHERS ARE AROUND.
- NEVER CARRY CHILDREN, EVEN WITH BLADES OFF.
- LOOK DOWN AND BEHIND BEFORE AND WHILE BACKING.
- KEEP SAFETY DEVICES (GUARDS, SHIELDS, AND SWITCHES) IN PLACE AND WORKING.
- REMOVE OBJECTS THAT COULD BE THROWN BY THE BLADE(S).
- KNOW LOCATION AND FUNCTION OF ALL CONTROLS.
- BE SURE BLADE(S) AND ENGINE ARE STOPPED BEFORE PLACING HANDS OR FEET NEAR BLADE(S).
- BEFORE LEAVING OPERATOR'S POSITION, DISENGAGE BLADE(S), PLACE THE SHIFT LEVER IN NEUTRAL, ENGAGE BRAKE LOCK, SHUT ENGINE OFF AND REMOVE KEY.

READ OPERATOR'S MANUAL

Setting the Cutting Height

Select the height position of the cutting deck by placing the deck lift lever in any of the six different cutting height notches on the right side of the fender. Then adjust the deck wheels so that they are between ¼-inch and ½-inch above the ground when the tractor is on a smooth, flat surface such as a driveway.

WARNING: Keep hands and feet away from the discharge opening of the cutting deck.

https://truckmanualshub.com/

NOTE: *The deck wheels are an anti-scalp feature of the deck and are not designed to support the weight of the cutting deck.*

Refer to **Leveling the Deck** on page 18 of this manual for more detailed instructions regarding various deck adjustments.

Starting the Engine

WARNING: Do not operate the tractor if the interlock system is malfunctioning. This system was designed for your safety and protection.

NOTE: *Refer to the* **TRACTOR SET-UP** *on page 8 of this manual for Gasoline and Oil fill-up instructions.*

- Insert the tractor key into the ignition switch.
- Place the PTO knob (or lever) in the disengaged (OFF) position.
- Engage the tractor's parking brake.
- Pull the choke control outward.
- Turn the ignition key clockwise to the START position. After the engine starts, release the key. It will return to the ON position.

IMPORTANT: Do NOT hold the key in the START position for longer than ten seconds at a time. Doing so may cause damage to your engine's electric starter.

- After the engine starts, deactivate the choke control and place the throttle control in the FAST position.

NOTE: *Do NOT leave the choke control on while operating the tractor. Doing so will result in a "rich" fuel mixture and cause the engine to run poorly.*

Stopping the Engine

WARNING: If you strike a foreign object, stop the engine, disconnect the spark plug wire(s) and ground against the engine. Thoroughly inspect the machine for any damage. Repair the damage before restarting and operating

- If the blades are engaged, place the PTO knob (or lever) in the disengaged (OFF) position.
- Turn the ignition key counterclockwise to the OFF position.
- Remove the key from the ignition switch to prevent unintended starting.

Driving The Tractor

WARNING: Avoid sudden starts, excessive speed and sudden stops.

WARNING: Do not leave the seat of the tractor without first placing the PTO knob (or lever) in the disengaged (OFF) position, depressing the brake pedal and engaging the parking brake. If leaving the tractor unattended, also turn the ignition key off and remove the key.

- Briefly depress the brake pedal to release the parking brake. Move the throttle lever into the FAST (rabbit) position.
- To travel FORWARD, slowly depress the upper portion of the drive pedal forward until the desired speed is achieved. See Figure 11.

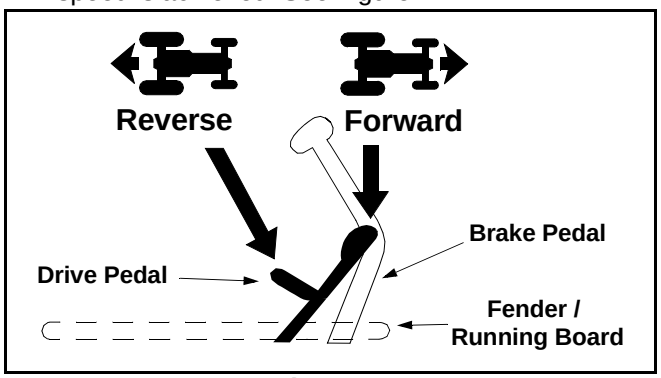

Figure 11

- To travel in REVERSE, check that the area behind is clear then slowly depress the lower portion of the drive pedal with the ball of your foot (NOT your heel) until the desired speed is achieved. See Figure 11.

IMPORTANT: Do NOT attempt to change the direction of travel when the tractor is in motion. Always bring the tractor to a **complete** stop before pivoting the drive pedal from forward to reverse or vice versa.

Engaging the Parking Brake

To engage the parking brake:

- Fully depress the brake pedal and hold it there while gently pushing the parking brake button inward.
- Hold the parking brake button in while removing your foot from the brake pedal.
- Once engaged, the parking brake button and the brake pedal will lock in the "down" position.

To disengage the parking brake:

- Slightly depress the brake pedal.

https://truckmanualshub.com/

NOTE: *The parking brake must be engaged if the operator leaves the seat with the engine running or the engine will automatically shut off.*

Driving On Slopes

Refer to the **SLOPE GAUGE** on page 7 to help determine slopes where you may operate the tractor safely.

WARNING: Do not mow on inclines with a slope in excess of 15 degrees (a rise of approximately 2-1/2 feet every 10 feet). The tractor could overturn and cause serious injury.

- Mow up and down slopes, NEVER across.
- Exercise extreme caution when changing direction on slopes.
- Watch for holes, ruts, bumps, rocks, or other hidden objects. Uneven terrain could overturn the machine. Tall grass can hide obstacles.
- Avoid turns when driving on a slope. If a turn must be made, turn down the slope. Turning up a slope greatly increases the chance of a roll over.
- Avoid stopping when driving up a slope. If it is necessary to stop while driving up a slope, start up smoothly and carefully to reduce the possibility of flipping the tractor over backward.

Setting The Cruise Control

NOTE: *The cruise control feature is NOT standard on all models.*

- Slowly depress the upper portion of the drive pedal until the desired speed is achieved.
- Lightly depress the cruise control button.
- While continuing to hold the cruise button in, lift your foot from the drive pedal (you should feel the cruise latch engage).
- Once engaged, the cruise control button and the drive pedal will lock in the “down” position, and the tractor will maintain the same forward speed.

NOTE: *Cruise control can not be engaged at the tractor’s fastest ground speed. If the operator should attempt to do so, the tractor will automatically decelerate to the fastest optimal mowing ground speed.*

Disengage the cruise control using one of the following methods:

- Depress the brake pedal to disengage the cruise control and stop the tractor.
- Lightly depress the drive pedal.

To change the direction of travel to reverse when operating with cruise control, depress the brake pedal to disengage the cruise control and bring the tractor to a complete stop. Then depress the lower portion of the drive pedal with the ball of your foot to travel in reverse.

Moving The Tractor Manually

Your tractor’s transmission is equipped with a hydrostatic relief valve for occasions when it is necessary to move the tractor manually. Activating this valve allows the rear tires to "freewheel." To engage the hydrostatic relief valve, proceed as follows:

- Locate the hydrostatic bypass rod in the rear of the tractor. See Figure 12.

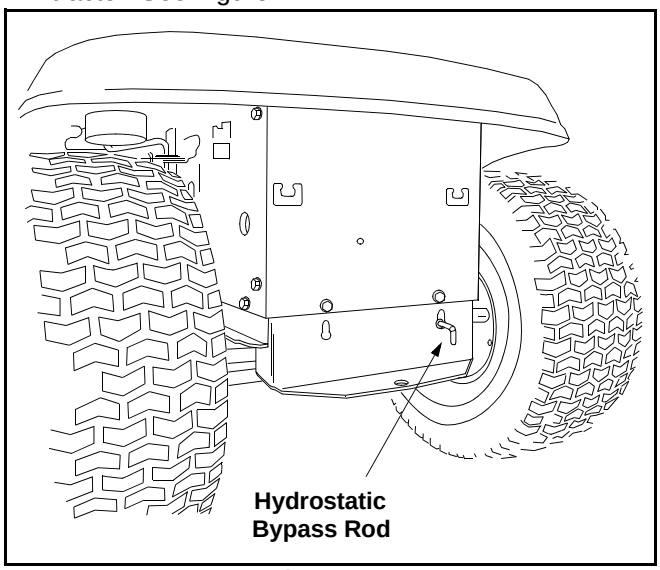

Figure 12

- Pull the hydrostatic bypass rod outward, then down, to lock it in place.

NOTE: *The transmission will NOT engage when the hydrostatic bypass rod is pulled out. Return the rod to its normal position prior to operating the tractor.*

IMPORTANT: Never attempt to move the tractor manually without first engaging the hydrostatic relief valve. Doing so will result in serious damage to the tractor’s transmission.

Engaging the PTO

Engaging the PTO transfers power to the cutting deck or other (separately available) attachments. To engage the PTO, proceed as follows:

- Move the throttle control lever to the FAST (rabbit) position.

Models with Manual PTO

- Grasp the PTO lever and pivot it all the way forward into the engaged (ON) position.

https://truckmanualshub.com/

Models with Electric PTO

- Pull the PTO knob outward into the engaged (ON) position. See Figure 13.

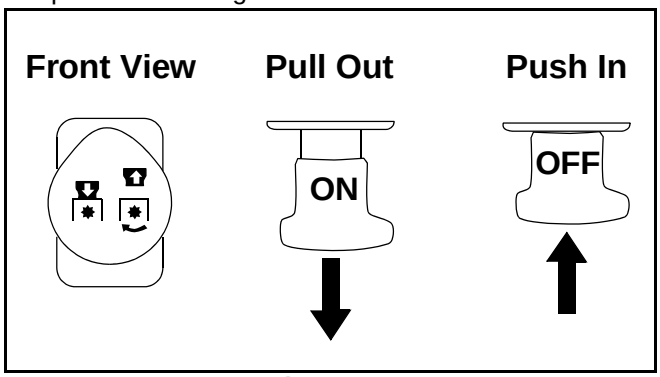

Figure 13

- Keep the throttle lever in the FAST (rabbit) position for the most efficient use of the cutting deck or other (separately available) attachments.

IMPORTANT: The engine (on models with a manual PTO) or electric PTO clutch (on models with an electric PTO) will automatically shut off if the PTO is engaged with the shift lever in position for reverse travel. Refer to **Safety Interlock Switches** on page 14.

Using the Deck Lift Lever

To raise the cutting deck, move the deck lift lever to the left, then place it in the notch best suited for your application. Refer to **Setting The Cutting Height** earlier in this section.

Mowing

WARNING: To help avoid blade contact or a thrown object injury, keep bystanders, helpers, children and pets at least 75 feet from the machine while it is in operation. Stop machine if anyone enters the area.

The following information will be helpful when using the cutting deck with your tractor.

WARNING: Plan your mowing pattern to avoid discharge of materials toward roads, sidewalks, bystanders and the like. Also, avoid discharging material against a wall or obstruction which may cause discharged material to ricochet back toward the operator.

- Do not mow at high ground speed, especially if a mulch kit or grass collector is installed.
- For best results it is recommended that the first two laps be cut with the discharge thrown towards the center. After the first two laps, reverse the direction to throw the discharge to the outside for the balance of cutting. This will give a better appearance to the lawn.
- Do not cut the grass too short. Short grass invites weed growth and yellows quickly in dry weather.
- Mowing should always be done with the engine at full throttle.
- Under heavier conditions it may be necessary to go back over the cut area a second time to get a clean cut.
- Do NOT attempt to mow heavy brush and weeds and extremely tall grass. Your tractor is designed to mow lawns, NOT clear brush.
- Keep the blades sharp and replace the blades when worn. Refer to **Cutting Blades** on page 22 of this manual for proper blade sharpening instructions.

Mulching

Some, NOT all, models come equipped with a mulch kit which incorporates special blades, already standard on your tractor, in a process of recirculating grass clippings repeatedly beneath the cutting deck. The ultra-fine clippings are then forced back into the lawn where they act as a natural fertilizer. Observe the following points for the best results when mulching.

- Never attempt to mulch if the lawn is damp. Wet grass tends to stick to the underside of the cutting deck preventing proper mulching of the clippings.
- Do NOT attempt to mulch more than 1/3 the total height of the grass or approximately 1-1/2 inches. Doing so will cause the clippings to clump up beneath the deck and not be mulched effectively.
- Maintain a slow ground speed to allow the grass clippings more time to effectively be mulched.
- Always position the throttle control lever in the FAST (rabbit) position and allow it to remain there while mowing. Failing to keep the engine at full throttle places strain on the tractor's engine and does not allow the blades to properly mulch grass.

NOTE: *It is not necessary to remove the discharge chute to operate the mower with the mulch kit installed.*

https://truckmanualshub.com/

42-inch Decks

To operate the cutting deck without mulching, on models so equipped, simply remove the mulch plug by unthreading the plastic wing nut which fastens it to the cutting deck. This will allow the clippings to discharge out the side. See Figure 14.

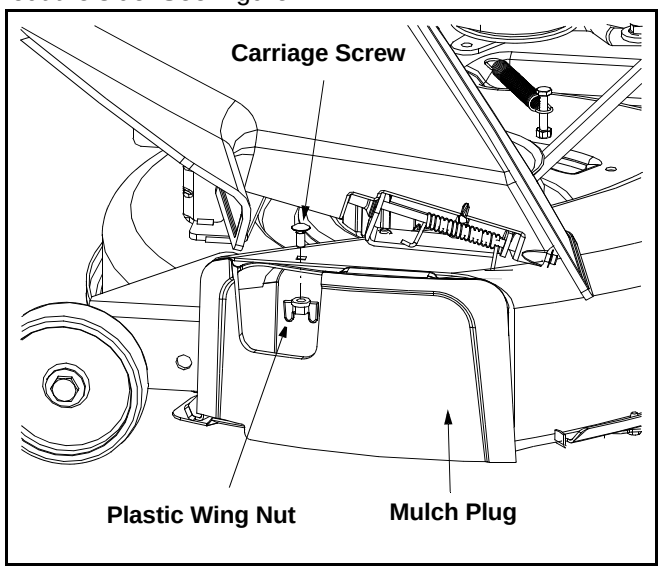

Figure 14

46-inch Decks

On models so equipped, the mulch kit is packed separately within the tractor's crate. Observe the instructions included with the mulch kit for the best results when mulching.

Operating The Headlights

To turn the tractor's headlights on:

- Start the engine following the instructions earlier in this section.
- Turn the key one notch counterclockwise into the On/Lights position of the ignition switch. Refer to Figure 9.

To turn the tractor's headlights off:

- Turn the key either into the On position (to leave the engine running) or the Off position (to shut the engine off). Refer to Figure 9.

NOTE: *Never move the key into the Start position while the engine is running. Doing so may cause damage to your engine's electric starter.*

SECTION 6: MAKING ADJUSTMENTS

WARNING: Never attempt to make any adjustments while the engine is running, except where specified in the operator's manual.

WARNING: Disconnect the spark plug wire(s) and ground against the engine before performing any adjustments, repairs or maintenance.

Leveling the Deck

NOTE: *Check the tractor's tire pressure before performing any deck leveling adjustments. Refer to* **Tires** *on page 22 for information regarding tire pressure.*

Front To Rear

The front of the cutting deck is supported by a stabilizer bar that can adjusted to level the deck from front to rear. The front of the deck should be between 1/4-inch and 3/8-inch lower than the rear of the deck. Adjust if necessary as follows:

- With the tractor parked on a firm, level surface, place the deck lift lever in the top notch (highest position) and rotate the blade nearest the discharge chute so that it is parallel with the tractor.
- Measure the distance from the front of the blade tip to the ground and the rear of the blade tip to the ground.
- The first measurement taken should be between 1/4" and 3/8" less than the second measurement.
- Determine the approximate distance necessary for proper adjustment and proceed, if necessary, to the next step.
- Loosen the two jam nuts on the rear side of the deck stabilizer bracket. See Figure 15A.
- Locate the two lock nuts on the opposite side of the stabilizer bracket. See Figure 15A. Tighten the lock nuts to raise the front of the deck; loosen the lock nuts to lower the front of the deck.
- Retighten the two jam nuts loosened earlier when proper adjustment is achieved.

Side to Side

If the cutting deck appears to be mowing unevenly, a side to side adjustment can be performed. Adjust if necessary as follows:

- With the tractor parked on a firm, level surface, place the deck lift lever in the top notch (highest position) and rotate both blades so that they are perpendicular with the tractor.

https://truckmanualshub.com/

- Measure the distance from the outside of the left blade tip to the ground and the distance from the outside of the right blade tip to the ground. Both measurements taken should be equal. If they're not, proceed to the next step.
- Loosen, but do NOT remove, the hex cap screw on the left deck hanger bracket. See Figure 15B.
- Balance the deck by using a wrench to turn the adjustment gear (found directly behind the hex cap screw just loosened) clockwise/up or counterclockwise/down.
- The deck is properly balanced when both blade tip measurements taken earlier are equal.
- Retighten the hex cap screw on the left deck hanger bracket when proper adjustment is achieved.

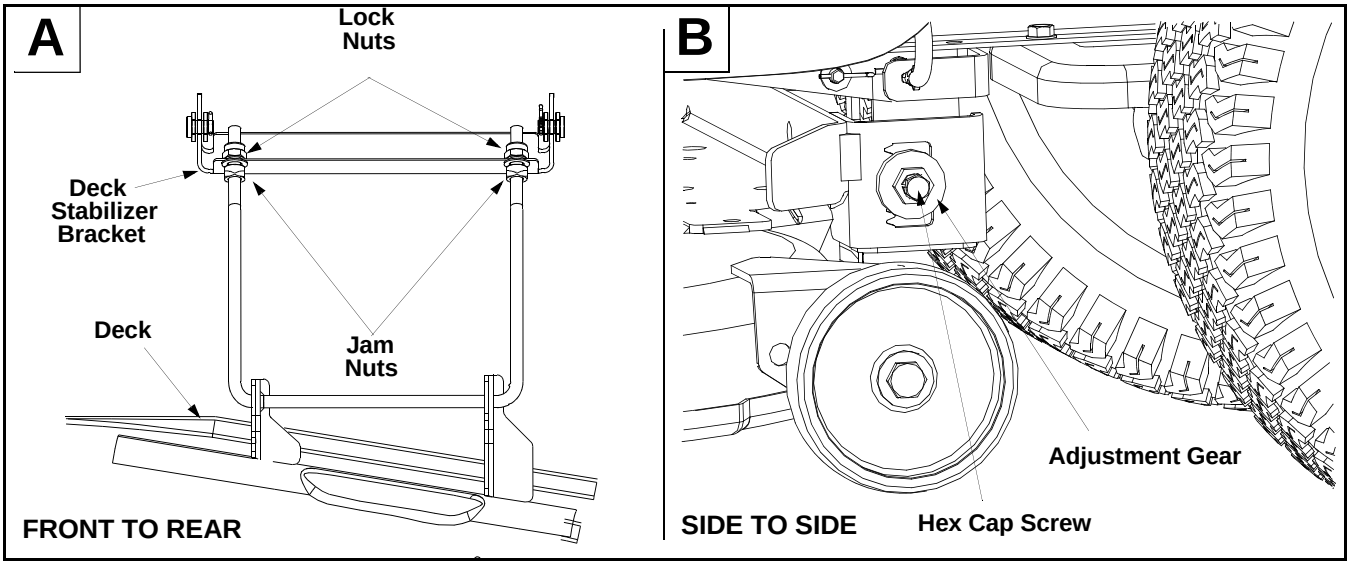

Figure 15

Parking Brake Adjustment

WARNING: Never attempt to adjust the brakes while the engine is running. Always disengage PTO, move shift lever into neutral position, stop engine and remove key to prevent unintended starting.

If the tractor does not come to a complete stop when the brake pedal is completely depressed, or if the tractor's rear wheels can roll with the parking brake applied, the brake is in need of adjustment. The brake disc can be found on the right side of the transmission in the rear of the tractor. Adjust if necessary as follows:

- Looking at the transmission from the right side of the tractor, locate the compression spring and brake disc.
- Carefully remove the cotter pin from the crown nut on the right side of the brake assembly.
- Using a feeler gauge, check the gap between the brake disc and the brake puck. Proper gap is.011".
- Tighten the crown nut until the proper gap is achieved.
- Insert a replacement cotter pin (part number 714-0111) into the crown nut.

Seat Adjustment

Standard Seat

To adjust the position of the seat, loosen the two hex screws on the bottom of the seat. Slide the seat forward or backward as desired. Retighten the two screws. See Figure 16.

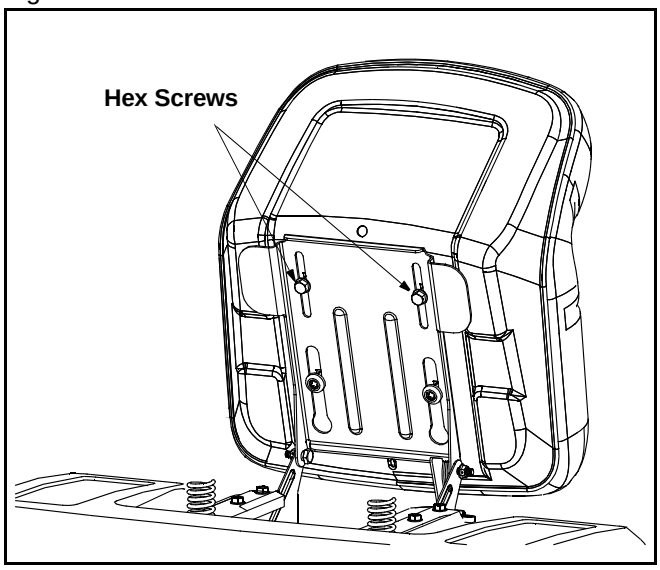

Figure 16

https://truckmanualshub.com/

Quick-adjust Seat (if so equipped)

WARNING: Before operating this machine, make sure the seat is engaged in the seat stop, stand behind the machine and pull back on seat until fully engaged into stop.

To adjust the position of the seat on models equipped with a seat adjustment lever, move the lever to the left and slide the seat forward or rearward. Make sure seat is locked into position before operating the tractor.

Knob Adjustment Seat (if so equipped)

To adjust the position of the seat on models so equipped, loosen the two knobs on the bottom of the seat. See Figure 17. Slide the seat forward or backward as desired. Retighten the two knobs.

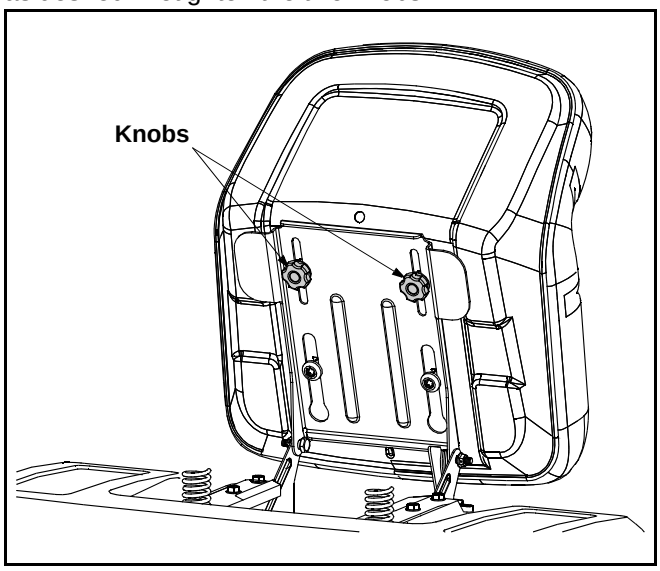

Figure 17

Steering Adjustment

If the tractor turns tighter in one direction than the other, or if the ball joints are being replaced due to damage or wear, the steering drag links may need to be adjusted.

Adjust the drag links so that equal lengths are threaded into the ball joint on the left side and the ball joint on the right side:

- Loosen the jam nut found on the drag link at the rear of the ball joint. See Figure 18.
- Remove the hex nut and lock washer on the top of ball joint. See Figure 18.
- Thread the ball joint toward the jam nut to shorten the drag link. Thread the ball joint away from the jam nut to lengthen the drag link.

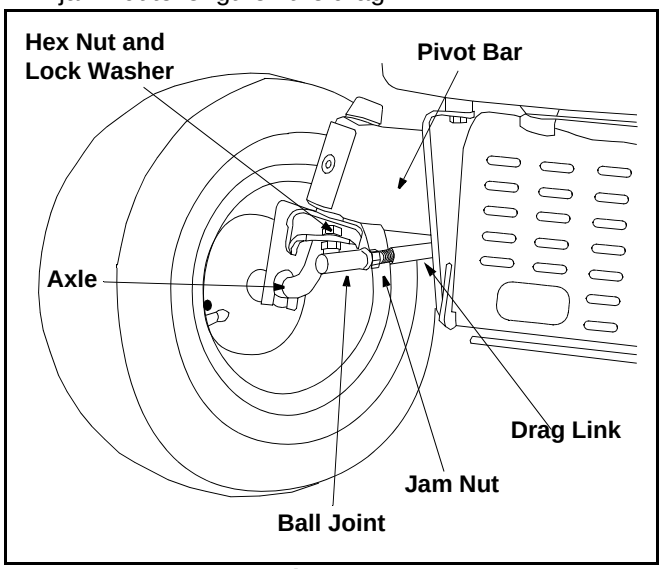

Figure 18

- Replace hex nut and lock washer and retighten the jam nut after proper adjustment is achieved.

NOTE: *Threading the ball joints too far onto the drag links will cause the front tires to "toe-in" too far. Proper toe-in is between 1/16" and 5/16".*

Front tire toe-in can be measured as follows:

- Place the steering wheel in position for straight ahead travel.
- In front of the axle, measure the distance horizontally from the inside of the left rim to the inside of the right rim. Note the distance.
- Behind the axle, measure the distance horizontally from the inside of the left rim to the inside of the right rim. Note the distance.
- The measurement taken in front of the axle should be between 1/16" and 5/16" less than the measurement taken behind the axle.
- Adjust if necessary.

https://truckmanualshub.com/

SECTION 7: MAINTAINING YOUR LAWN TRACTOR

WARNING: Before performing any maintenance or repairs, disengage PTO, move shift lever into neutral position, set parking brake, stop engine and remove key to prevent unintended starting.

Engine

Refer to the *Briggs & Stratton* Operator/Owner Manual (or *Kohler* engine's Owner's Manual) for engine maintenance instructions.

Check **engine oil level** before each use as instructed in the ***Briggs & Stratton*** Operator/Owner Manual (or *Kohler* engine's Owner's Manual) packed with your unit. **Follow the instructions carefully.**

Changing Engine Oil

NOTE: *Depending on the engine model found on your tractor, it may be necessary to remove the tractor's side panel in order to replace the oil filter (if so equipped).*

- Unscrew oil fill cap and remove dipstick from the oil fill tube. See Figure 19.
- Pop open the protective cap on the end of the oil drain valve to expose the drain port. See Figure 19.
- Push the oil drain hose (packed with this manual) onto the oil drain port. Route the opposite end of the hose into an appropriate oil collection container with a capacity of no less than 64 oz.
- Push the oil drain valve in slightly, then rotate counterclockwise and pull outward to begin draining oil. See Figure 19.
- Service the **oil filter** (if so equipped) as instructed in the separate *Briggs & Stratton* Operator/Owner Manual (or *Kohler* engine's Owner's Manual) packed with your unit.

Perform the above steps in the opposite order after oil has finished draining.

- Refill the engine with new motor oil.

IMPORTANT: Refer to the *Briggs & Stratton* Operator/Owner Manual (or *Kohler* engine's Owner's Manual) packed with your unit for information regarding the quantity and proper weight of motor oil.

Air Cleaner

Service the pre-cleaner, if so equipped, and cartridge/air cleaner element as instructed in the *Briggs & Stratton* Operator/Owner Manual (or *Kohler* engine's Owner's Manual) packed with your unit.

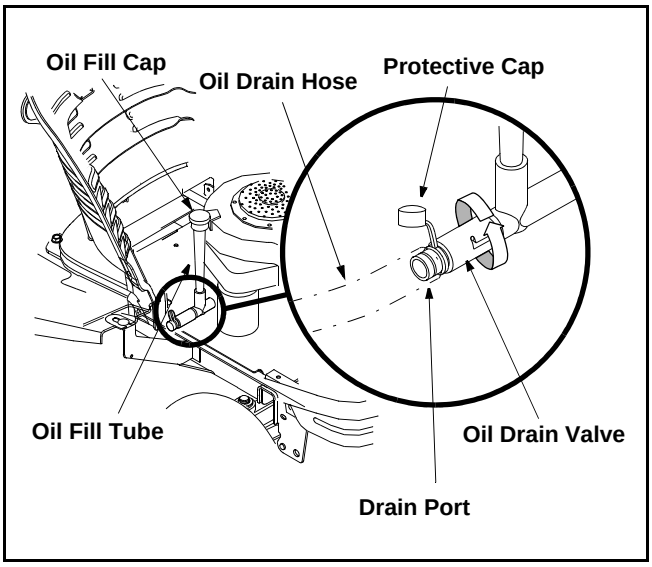

Figure 19

Spark Plug(s)

The spark plug(s) should be cleaned and the gap reset once a season. Spark plug replacement is recommended at the start of each mowing season. Refer to the *Briggs & Stratton* Operator/Owner Manual (or *Kohler* engine's Owner's Manual) for correct plug type and gap specifications.

Lubrication

WARNING: Before lubricating, repairing, or inspecting, always disengage PTO, move shift lever into neutral position, set parking brake, stop engine and remove key to prevent unintended starting.

Engine

Lubricate the engine with motor oil as instructed in the *Briggs & Stratton* Operator/Owner Manual (or *Kohler* engine's Owner's Manual) packed with your unit.

Pivot Points & Linkage

Lubricate all the pivot points on the drive system, parking brake and lift linkage at least once a season with light oil.

Rear Wheels

The rear wheels should be removed from the axles once a season. Lubricate the axles and the rims well with an all-purpose grease before re-installing them.

Front Axles

Each end of the tractor's front pivot bar may be equipped with a grease fitting. Lubricate with a grease gun after every 25 hours of tractor operation.

https://truckmanualshub.com/

Transmission

The hydrostatic transmission is maintenance-free and sealed at the factory. The oil level cannot be checked nor can the oil be changed.

Cleaning the Engine And Deck

Any fuel or oil spilled on the machine should be wiped off promptly.

Do NOT allow debris to accumulate around the cooling fins of the engine or on any other part of the machine, especially the belts and pulleys.

IMPORTANT: The use of a pressure washer or garden hose to clean your tractor is NOT recommended. It may cause damage to electrical components, spindles, pulleys, bearings or the engine. The use of water will result in a shortened life of the tractor and reduce its serviceability.

SECTION 8: SERVICE

Cutting Blades

WARNING: Be sure to shut the engine off, remove ignition key, disconnect the spark plug wire(s) and ground against the engine to prevent unintended starting before removing the cutting blade(s) for sharpening or replacement. Protect your hands by using heavy gloves or a rag to grasp the cutting blade.

WARNING: Periodically inspect the blade adapter and/or spindle for cracks or damage, especially if you strike a foreign object. Replace immediately if damaged.

The blades may be removed as follows.

- Remove the deck from beneath the tractor, (refer to **Cutting Deck Removal** on page 23) then gently flip the deck over to expose its underside.
- Place a block of wood between the center deck housing baffle and the cutting blade to act as a stabilizer. See Figure 20.

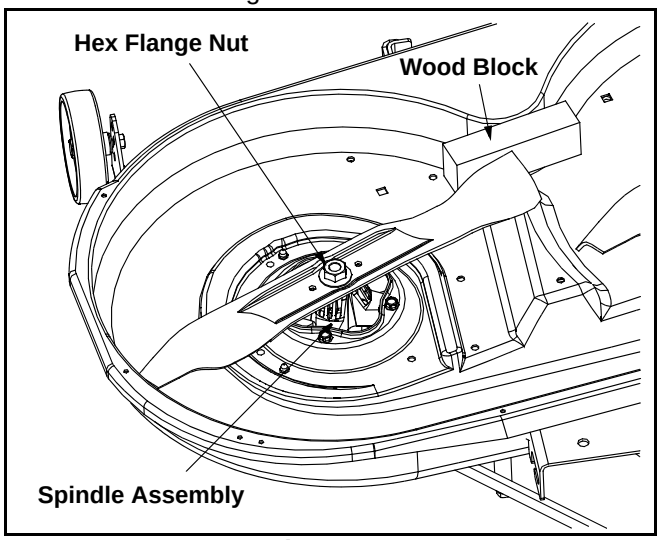

Figure 20

- Use a 15/16" wrench to remove the hex flange nut that secures the blade to the spindle assembly. See Figure 20.

To properly sharpen the cutting blades, remove equal amounts of metal from both ends of the blades along the cutting edges, parallel to the trailing edge, at a 25° to 30° angle. See Figure 21.

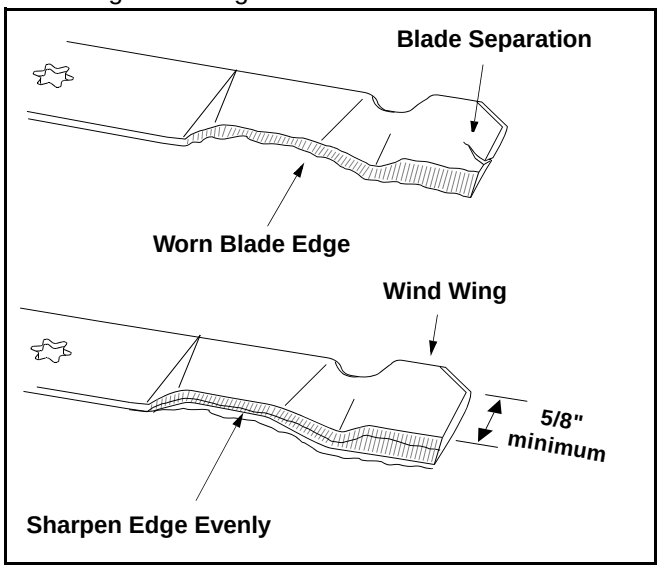

Figure 21

IMPORTANT: If the cutting edge of the blade has already been sharpened to within 5/8" of the wind wing radius, or if any metal separation is present, replace the blades with new ones. See Figure 21.

It is important that each cutting blade edge be ground equally to maintain proper blade balance.

A poorly balanced blade will cause excessive vibration and may cause damage to the tractor and result in personal injury.

The blade can be tested by balancing it on a round shaft screwdriver. Grind metal from the heavy side until it balances evenly.

https://truckmanualshub.com/

When replacing the blade, be sure to install the blade with the side of the blade marked ‘‘Bottom’’ (or with a part number stamped in it) facing the ground when the mower is in the operating position.

IMPORTANT: Use a torque wrench to tighten the blade spindle hex flange nut to between 70 foot-pounds and 90 foot-pounds.

Tires

WARNING: Never exceed the maximum inflation pressure shown on the sidewall of the tire.

The recommended operating tire pressure is 10 psi for the rear tires and 14 psi for the front tires. Refer to the tire sidewall for exact tire manufacturer’s recommended or maximum psi. Do not overinflate. Uneven tire pressure may cause the cutting deck to mow unevenly.

Battery

The battery is sealed and is maintenance-free. Acid levels cannot be checked.

- Always keep the battery cables and terminals clean and free of corrosive build-up.
- After cleaning the battery and terminals, apply a light coat of petroleum jelly or grease to both terminals.
- Always keep the rubber boot positioned over the positive terminal to prevent shorting.

IMPORTANT: If removing the battery for any reason, disconnect the NEGATIVE (Black) wire from it’s terminal first, followed by the POSITIVE (Red) wire. When re-installing the battery, always connect the POSITIVE (Red) wire its terminal first, followed by the NEGATIVE (Black) wire. Be certain that the wires are connected to the correct terminals; reversing them could change the polarity and cause damage to your engine’s alternating system.

Charging

If the unit has not been put into use for an extended period of time, charge the battery with an automotive-type 12-volt charger for a minimum of one hour at six amps.

WARNING: Batteries give off an explosive gas while charging. Charge battery in a well ventilated area and keep away from an open flame or pilot light as on a water heater, space heater, furnace, clothes dryer or other gas appliances.

Fuses

Two fuses are installed in your tractor’s wiring harness to protect the tractor’s electrical system from damage caused by excessive amperage.

If the electrical system does not function, or your tractor’s engine will not crank, first check to be certain that the fuse has not blown.

One can be found under the hood mounted behind the top of the dash panel on the support bar.
The other can be found under the seat mounted to the inside of the tractor frame next to the battery tray. Pull the fuse out and inspect it to determine if it is good or blown.

Cutting Deck Removal

IMPORTANT: If removing the deck on a tractor with a manual PTO, have a replacement cotter pin (Part No. 714-0470) on hand before proceeding.

To remove the cutting deck, proceed as follows:

- Place the PTO knob (or lever) in the disengaged (OFF) position and engage the parking brake.
- Lower the deck by moving the deck lift lever into the bottom notch on the right fender.
- On models with a 42-inch deck, remove the PTO belt from around the cutting deck’s center pulley. Refer to Figure 24 .
- On models with a 46-inch deck, remove the PTO belt from around the tractor’s engine pulley or electric PTO clutch, if so equipped. Refer to Figure 24 .
- On all models equipped with a manual PTO, locate and unhook the deck brake cable by removing the cotter pin which secures it. See Figure 22.

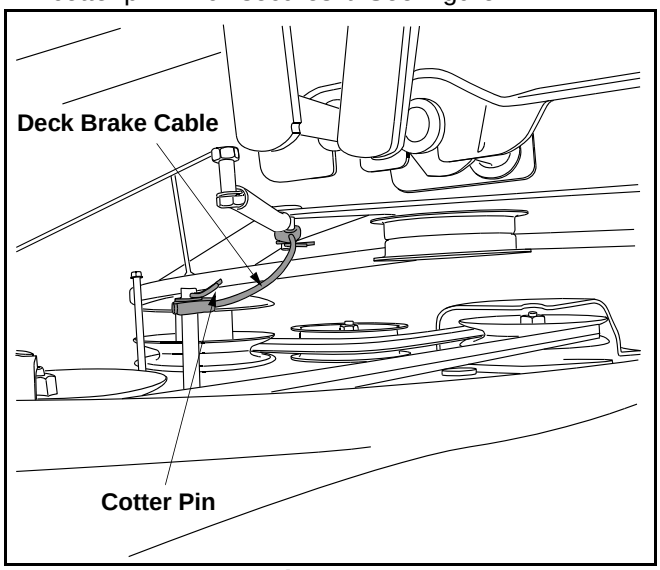

Figure 22

https://truckmanualshub.com/

- Looking at the cutting deck from the left side of the tractor, locate the deck support pin on the rear left side of the deck. See Figure 23.

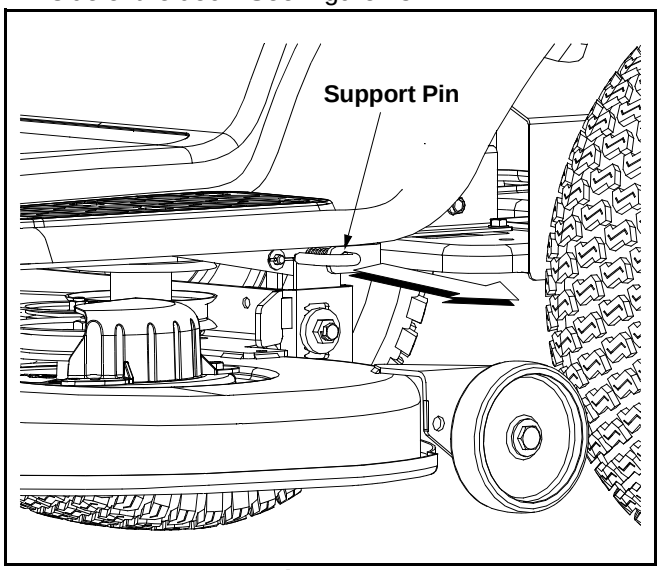

Figure 23

- Pull the deck support pin outward to release the deck from the deck lift arm.
- Rotate the pin slightly toward the rear of the tractor and release the pin into the hole provided.
- Repeat the above steps on the tractor's right side.
- Move the deck lift lever into the top notch on the right fender to raise the deck lift arms up and out of the way.
- Gently slide the cutting deck toward the front of the tractor allowing the hooks on the deck to release themselves from the deck stabilizer rod.
- Gently slide the cutting deck (from the right side) out from underneath the tractor.

IMPORTANT: When re-installing the deck on a tractor with a manual PTO, always use a new cotter pin (Part No. 714-0470) to re-secure the deck brake cable. **Never reuse the old cotter pin**.

Changing the Deck Belt & PTO Belt

WARNING: Be sure to shut the engine off, remove ignition key, disconnect the spark plug wire(s) and ground against the engine to prevent unintended starting before removing the belt(s).

All belts on your tractor are subject to wear and should be replaced if any signs of wear are present.

IMPORTANT: The V-belts found on your tractor are specially designed to engage and disengage safely. A substitute (non-OEM) V-belt can be dangerous by not disengaging completely. For a proper working machine, use factory approved belts.

To change or replace the deck belts on your tractor, proceed as follows:

- Lower the deck by moving the deck lift lever into the bottom notch on the right fender.
- Remove the belt guards by removing the self-tapping screws that fasten them to the deck.
- Grasp the rearmost portion of the PTO idler bracket and pivot it toward the discharge chute to relieve tension on the PTO belt.
- Remove the PTO belt from the engine pulley (or electric PTO clutch) and the PTO idler pulley(s).
- Grasp the deck idler pulley and pivot it toward the left side of the deck to relieve tension on the deck belt.
- Remove the deck belt from around all pulleys, including the deck idler pulley.
- Route the new belts as shown in Figure 24.
- Remount the belt guards removed ealier.

https://truckmanualshub.com/

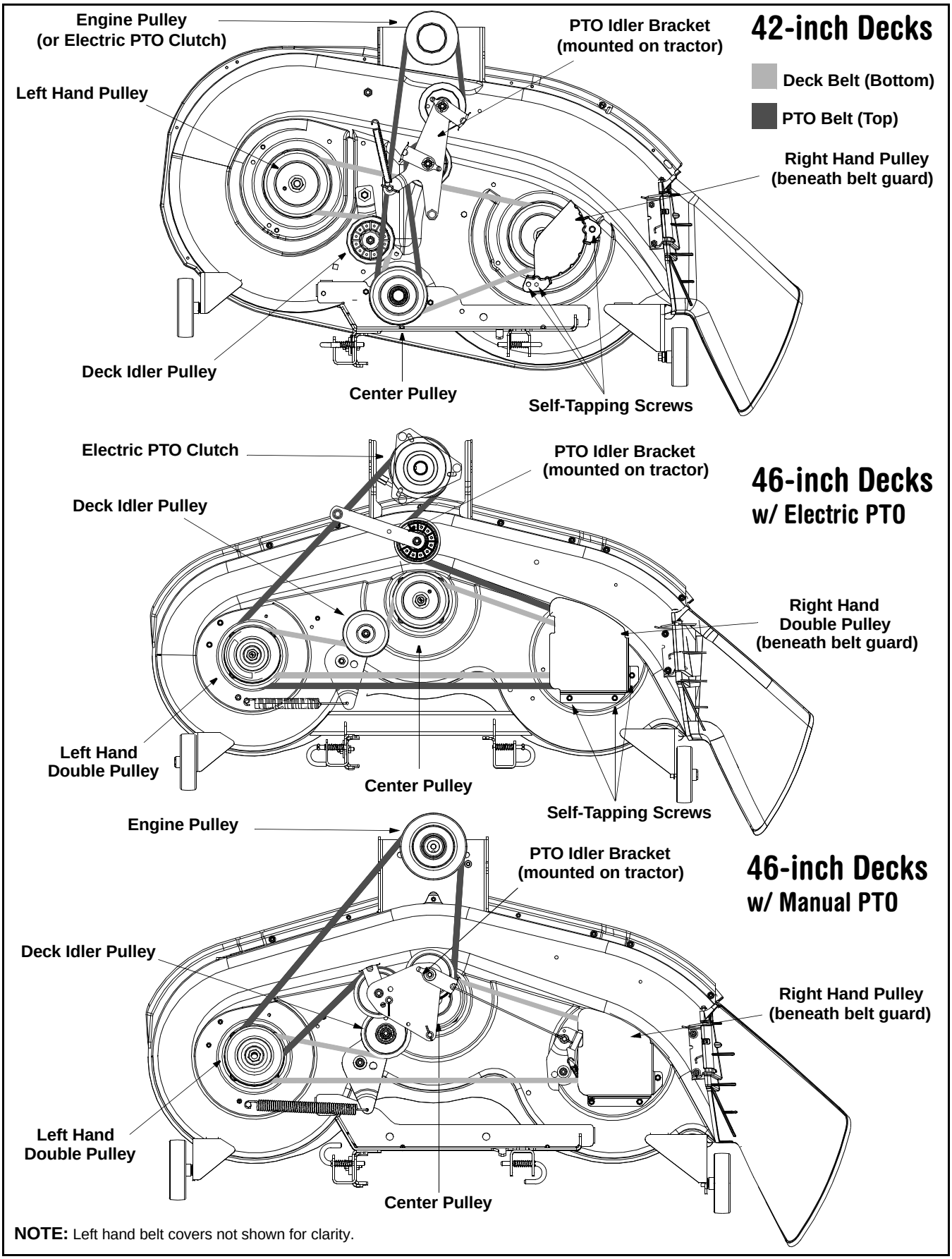

Figure 24

https://truckmanualshub.com/

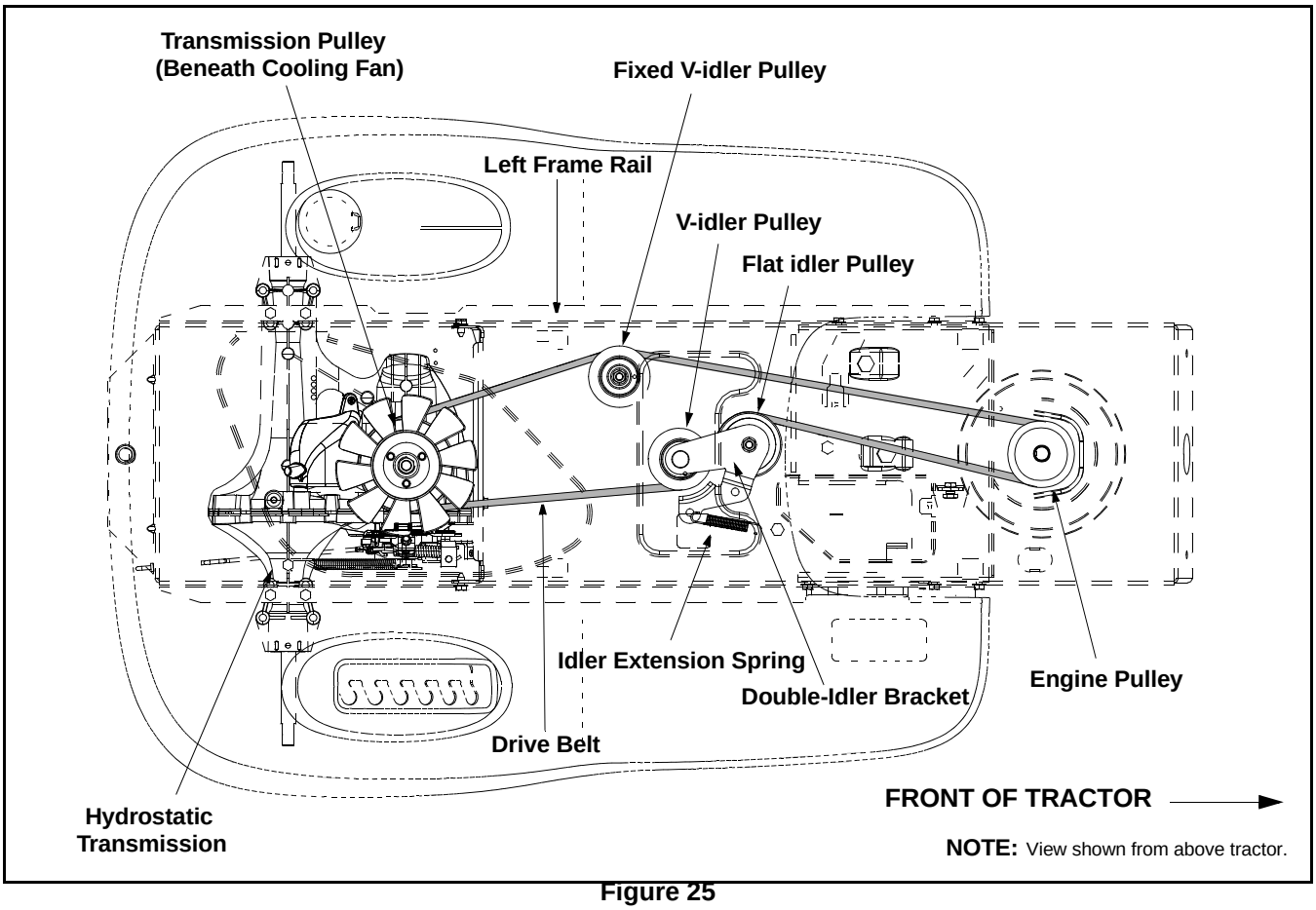

Figure 25

Changing The Transmission Drive Belt

NOTE: *The engine pulley must be removed from the engine's crankshaft in order to change the tractor's drive belt.* ***Doing so requires an air/impact wrench****.*

All belts on your tractor are subject to wear and should be replaced if any signs of wear are present.

IMPORTANT: The V-belts found on your tractor are specially designed to engage and disengage safely. A substitute (non-OEM) V-belt can be dangerous by not disengaging completely. For a proper working machine, use factory approved belts.

To change or replace the drive belt on your tractor, proceed as follows:

- Remove the cutting deck as instructed earlier in this section.
- After disconnecting the battery cables, remove the battery and battery tray from beneath the seat.

IMPORTANT: When removing the battery, disconnect the NEGATIVE (Black) wire from it's terminal first, followed by the POSITIVE (Red) wire. Re-install in reverse order.

NOTE: *Proper removal of the drive belt requires the removal of several tractor components. Read through the following procedure prior to attempting it to determine if you feel you could successfully complete it. If you don't, see an authorized MTD service dealer have the belt changed.*

IMPORTANT: Note the routing of the lower drive belt around all the pulleys and the belt keepers (if present) BEFORE performing the following steps.

- Locate the fixed v-idler pulley found on the left underside of the frame. See Figure 25.
- Grasp the belt on both sides of the pulley and gently move it toward the left frame rail allowing it to unseat itself from the fixed v-idler. See .
- Pivot the double-idler bracket forward slightly before removing the idler extension spring from the stud and the double-idler bracket itself. Do NOT discard the spring.
- Roll the drive belt out from around both the v-idler pulley and the flat idler pulley found on the double-idler bracket.
- Carefully unplug the tractor's wire harness from the connector on the electric PTO clutch (if present).

https://truckmanualshub.com/

- Using an impact gun with a 5/8-inch socket, remove the hex screw with secures the electric PTO clutch (or the engine pulley) to the engine crankshaft.
- Gently lower the electric PTO clutch (or the engine pulley) off of the engine crankshaft. Be careful not to lose any washers or spacers which may be found on top of the electric PTO clutch or engine pulley.
- On units equipped with an electric PTO, the engine pulley is located directly above the electric PTO clutch. Lower the engine pulley far enough to be able to remove the upper drive belt from around it.

IMPORTANT: When remounting the electric PTO clutch (or engine pulley), torque the center hex bolt to between 38 foot-pounds and 50 foot-pounds.

- Remove the drive belt by feeding it from front to rear, toward the hydrostatic transmission. See Figure 25 .
- Continue removing the drive belt by gently lifting it off of the transmission pulley and over the cooling fan.

IMPORTANT: The fins on the cooling fan are only slightly flexible. Be careful not to damage the fan when removing the drive belt from around the transmission pulley.

- Reroute the new belt around the pulleys and belt keepers, if present, EXACTLY as the old one was routed. Refer to Figure 25 .

Hydrostatic Transmission

The hydrostatic transmission is sealed at the factory and is maintenance free. The fluid level cannot be checked nor can the oil be changed. **Always** keep the area around the transmission cooling fan free of grass and debris at all times.

SECTION 9: OFF-SEASON STORAGE

Clean and lubricate the tractor as instructed in **Section 7: MAINTAINING YOUR LAWN TRACTOR** on page 21 of this manual before storing for an extended period.

WARNING: Drain fuel only into an approved container outdoors, away from an open flame. Allow engine to cool. Extinguish cigarettes, cigars, pipes, and other sources of ignition prior to draining fuel.

Follow the instructions in the **Service, Storage & Specifications** section of the *Briggs & Stratton* Operator/Owner Manual (or *Kohler* engines Manual) for proper engine care prior to storing your tractor.

WARNING: Never store the machine or fuel container indoors where there is an open flame, spark or pilot light such as on water heater, furnace, clothes dryer or other gas appliance.

SECTION 10: ATTACHMENTS & ACCESSORIES

The following attachments and accessories are compatible for **Lawn Tractor Model 614**. See the retailer from which you purchased your tractor, an authorized *MTD* Service Dealer or phone (800) 800-7310 for information regarding price and availability.

NOTE: *Lawn tractor model 614 is NOT designed for use with any type of ground-engaging attachments (e.g. tiller or plow). Use of this type of equipment WILL void the tractor's warranty.*

MODEL	DESCRIPTION
OEM-190-116	42-inch Deck Mulch Kit
OEM-190-118	46-inch Deck Mulch Kit
OEM-190-180	FastAttach™ Twin Bagger Grass Collector (for 42-inch Decks)
OEM-190-182	FastAttach™ Twin Bagger Grass Collector (for 46-inch Decks)
OEM-190-603	FastAttach™ Grille Guard (mounts on front of tractor)
OEM-190-604	FastAttach™ Yard-Mate™ Storage Container/Toolbox (mounts on rear of tractor)*
OEM-190-607	FastAttach™ Deluxe Tractor Sunshade*
OEM-190-822	FastAttach™ 46-inch Front Dozer Blade
OEM-190-823	FastAttach™ 42-inch Two-stage Snow Thrower

*Cannot be used with grass collector mounted.

https://truckmanualshub.com/

SECTION 11: TROUBLESHOOTING

Trouble	Possible Cause(s)	Corrective Action
Engine fails to start	PTO knob (or lever) engaged. Parking brake not engaged. Spark plug wire(s) disconnected. Throttle control lever not in correct starting position. Choke not activated Fuel tank empty, or stale fuel. Blocked fuel line. Faulty spark plug. Engine flooded.	Disengage PTO. Engage parking brake. Connect wire(s) to spark plug. Place throttle lever to FAST or CHOKE position. Pull out the CHOKE control or move throttle lever to CHOKE position Fill tank with clean, fresh (less than 30 days old) gas. Clean fuel line or replace fuel filter, if so equipped. Clean, adjust gap or replace plug. Crank engine with throttle in FAST position.
Engine runs erratic	Unit running with CHOKE applied. Spark plug wire(s) loose. Blocked fuel line or stale fuel. Vent in gas cap plugged. Water or dirt in fuel system. Dirty air cleaner.	Deactivate CHOKE. Connect and tighten spark plug wire(s). Clean fuel line; fill tank with clean, fresh (less than 30 days old) gasoline. Replace fuel filter, if so equipped. Clear vent or replace cap if damaged. Drain fuel tank. Refill with clean, fresh (less than 30 days old) gasoline. Replace air cleaner cartridge/element or clean pre-cleaner, if so equipped.
Engine overheats	Engine oil level low. Air flow restricted.	Fill crankcase with proper capacity and weight of oil. Clean grass clippings and debris from around the engine's cooling fins and blower housing.
Engine hesitates at high RPM	Spark plug gap too close.	Remove spark plug and reset the gap.
Idles poorly	Spark plug fouled, faulty or gap too wide. Dirty air cleaner.	Replace spark plug. Set plug gap. Replace air cleaner cartridge/element or clean pre-cleaner, if so equipped.
Excessive vibration	Cutting blade loose or unbalanced. Damaged or bent cutting blade.	Tighten blade and spindle. Balance blade. Replace blade.
Uneven cut	Deck not balanced properly. Dull blade. Uneven tire pressure.	Perform side-to-side deck adjustment. Sharpen or replace blade. Check tire pressure in all four tires.

https://truckmanualshub.com/

NOTES

https://truckmanualshub.com/

SECTION 12: MODEL 618 PARTS LIST

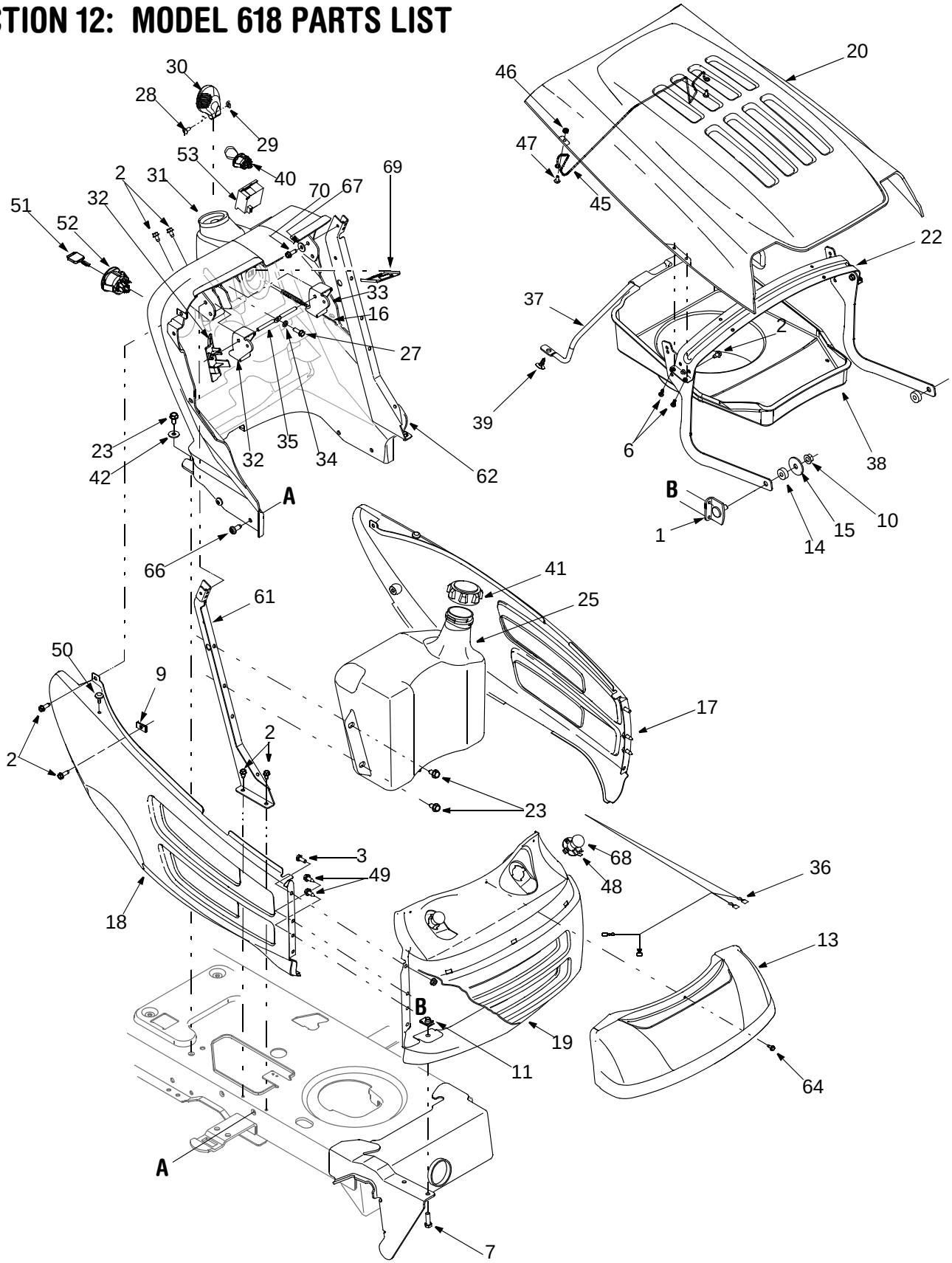

https://truckmanualshub.com/

Model 618

Ref. No.	Part No.	Description
1	683-0195	Bracket Assembly
2	710-0599	Self-tapping Screw, 1/4-20 x .5
3	710-0751	Hex Cap Screw, 1/4-20 x .62
4	710-0924	Phillips Pan Screw, 1/4-20 x .75
6	710-0351	Screw, #10-16 x .5
7	710-0376	Hex Cap Screw, 5/16-18 x 1.0
8	712-0271	Hex Sems Nut, 1/4-20
9	712-0292	U-type Speed Nut, 1/4-20
10	712-0431	Flange Lock Nut, 3/8-16
11	726-0211	U-nut, 5/16-18
13	731-1854A	Headlight Lens
14	735-0126	Rubber Washer, .87 x .33
15	736-3039	Flat Washer, .406 x 1.5 x 11GA
16	746-1085	Choke Knob/Cable (B&S OHV V-Twin)
	746-1088	Choke Knob/Cable (Kohler)
17	783-0475B	LH Side Panel
18	783-0476C	RH Side Panel
19	783-0477A	Grill
20	783-0478A	Hood
21	783-1495	Hood Hinge Bracket
22	783-0553A	Hood Support Bracket
23	710-0604A	Self-tapping Screw, 5/16-18 x .625
24	751-0658D	Fuel Tank, Three Gallon
	751-0659C	Fuel Tank, Two Gallon (shown)
25	751-0603	Fuel Cap (fits either tank)
26	710-0809	Self-tapping Screw, 1/4-20 x 1.25
27	710-0895	Self-tapping Screw, 1/4-15 x .75
28	710-3217	Truss Phillips Screw, #8-32 x .375
29	712-0142	Hex Nut, #8-32
30	731-1857	Throttle Control Knob
31	731-2225C	Dash Panel (Models w/ Electric PTO)
	731-2122C	Dash Panel (Models w/ Manual PTO)
32	731-04215	Cruise Control Button
	731-2228	Cruise Cover (Models w/o Cruise)
33	731-04217	Parking Brake Button
34	736-0142	Flat Washer, 9/32 x 1/2 x 1/16
35	747-1196	Brake/Cruise Pivot Rod
36	629-04083	Headlight Wire Harness
37	747-1184	Hood Plenum Support Rod

Ref. No.	Part No.	Description
38	731-2245A	Hood Plenum, 2.85”
	731-2247A	Hood Plenum, 1.60”
	731-2248A	Hood Plenum, .80”
39	726-3046	Ratchet Clip
40	725-1752	Electric PTO Switch
41	712-3027	Hex Flange Lock Nut, 1/4-20
42	736-3078	Flat Washer, .349 x 1.0 x .063
45	747-1215A	Hood Latch
46	712-0272	Hex Sems Nut, #10-32
47	710-0473	Machine Screw, #10-24
48	725-1649	Headlight Socket
49	710-0896	Hex Index Washer Scr., 1/4-14 x .0625
50	735-0199A	Rubber Bumper
51	725-1745	Ignition Key w/ plastic cover
	725-1744	Ignition Key w/o plastic cover
52	725-1741	Ignition Switch
53	725-04036A	Systems Ind. Monitor w/ Hour Meter
	725-04126	Systems Ind. Monitor w/ Ammeter
58	711-0332	Clevis Pin, .50 x .78
59	768-0010A	Bumper Assembly
60	714-0145	Internal Cotter Pin
61	783-04323	LH Dash Support Plate
62	783-04285	RH Dash Support Plate
63	783-1034	Hood Bracket
64	710-0456	Hex Screw, #10 x .50
65	731-1999	Choke Plug
66	710-1611B	Screw, 5/16-18 x .75
67	736-0270	Bell Washer, .265 x .75 x .062
68	725-0963	Lamp
69	783-0462	Switch Bracket, Electric PTO
70	710-0642	Self-tapping Screw, 1/4-20 x .75
—	629-04067	Harness Adapter (Models w/ Kohler Engine)
—	629-04073	Wire Harness (models w/ Electric PTO & Hour Meter)
—	629-04074	Wire Harness (models w/ Electric PTO & Ammeter
—	629-04075	Wire Harness (models w/ Manual PTO & Hour Meter)
—	629-04076	Wire Harness (models w/ Manual PTO & Ammeter)

NOTE: *Tractor features vary by model. NOT all parts listed above and pictured on the previous page are standard equipment.*

https://truckmanualshub.com/

Model 618

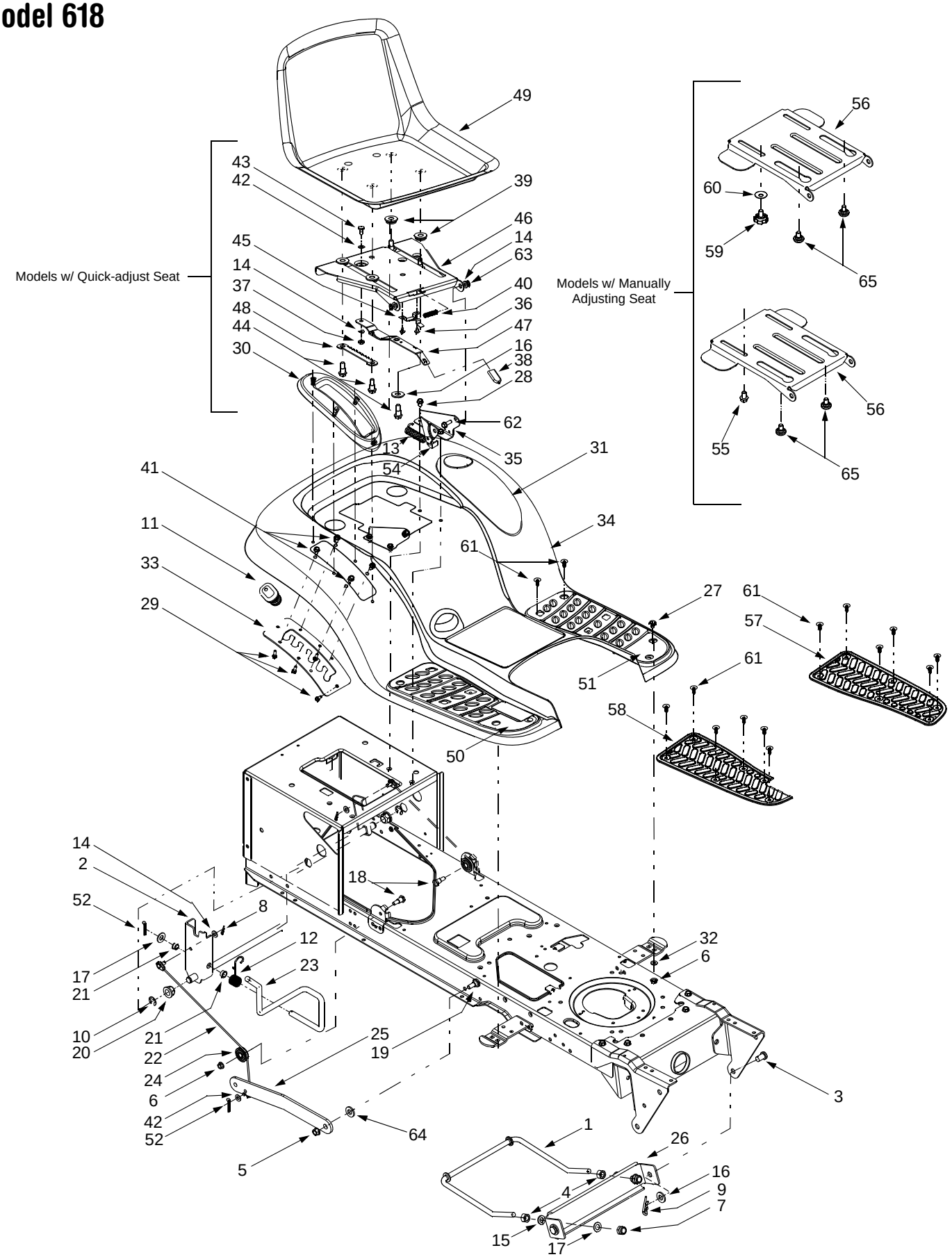

https://truckmanualshub.com/

Model 618

REF. NO.	PART NO.	DESCRIPTION
1	747-1130B	Deck Stabilizer Rod
2	683-04079	Lift Shaft Assembly
3	711-0332	Clevis Pin,.5 x.78
4	712-0206	Hex Nut, 1/2-13
5	712-0431	Flange Lock Nut, 3/8-16
6	712-3004A	Flange Lock Nut, 5/16-18
7	712-3083	Hex Nut, 1/2-13
8	714-0104	Internal Cotter Pin
9	714-0145	Internal Cotter Pin
10	716-0106	E-ring
11	720-0311	Handle Grip
12	732-0874	Torsion Spring
13	732-1184	Extension Spring,.84 x 4.6
14	736-0275	Flat Washer, 5/16
15	736-0921	Lock Washer, 1/2
16	736-3019	Flat Washer,.31 x 1.062 x.134
17	736-3084	Flat Washer,.51 x 1.12 x.06
18	738-0138A	Hex Cap Screw, 5/16-18 x.62
19	738-0143	Shoulder Screw, 3/8-16
20	741-0225	Hex Flange Bearing
21	741-0715	Snap Flange Bearing
22	746-0968	Lift Cable, 16.16
23	747-04155	Lift Handle
24	756-1154	Roller Pulley
25	783-0678A	Arm Lift
26	783-0720A	Deck Stabilizer Bracket
27	710-0260A	Carriage Bolt, 5/16 x.62
28	710-0604A	Self-tapping Screw, 5/16-18 x.625
29	710-0895	Self-tapping Screw, 1/4-15 x.75
30	731-1990	Lift Lever Cover
31	731-1993	Cover w/ Cup Holder† (Shown)
	731-04591	Cup Holder‡
32	736-3078	Flat Washer,.349 x 1.0 x.063
33	783-1010	Deck Lift Plate

REF. NO.	PART NO.	DESCRIPTION
34	783-04333	Fender, 4-Style† (Shown)
	783-04437	Fender, 7-Style‡
35	783-1489	Seat Mounting Bracket
36	710-1268	Screw, #10-16 x.375
37	712-3027	Hex Flange Lock Nut, 1/4-20
38	720-0309A	Seat Adjuster Grip
39	731-04074	Spacer
40	732-0499	Compression Spring,.41 x 1.5
41	710-0726	Self-tapping Screw, 5/16-18 x.625
42	736-0204	Flat Washer,.344 x.62 x.03
43	738-0137A	Shoulder Screw,.340 x.285,1/4-20
44	738-0966	Shoulder Screw,.50 x.50, 3/8-16
45	783-0611	Seat Stop
46	783-0738A	Seat Pivot Bracket
47	783-0739	Seat Adjustment Lever
48	783-0753	Seat Adjustment Selector
49	757-04012	High Back Seat
	757-04011B	Medium Back Seat
50	735-0656	RH Foot Pad, Rubber (4-Style Fender)
51	735-0657	LH Foot Pad, Rubber (4-Style Fender)
52	714-0111	Cotter Pin
54	783-0209C	Seat Lift Bracket
55	710-0870	Hex Head Washer Screw, 3/8-16 x.625
56	783-04081A	Seat Pivot Bracket, Manually Adjusted
57	735-0672	RH Foot Pad, Rubber (7-Style Fender)
58	735-0673	LH Foot Pad, Rubber (7-Style Fender)
59	720-04009	Knob, 3/8-16
60	736-0331	Cupped Washer,.39 x 1.12
61	726-3046	Ratchet Clip
62	738-0296	Shoulder Screw,.437 x.286
63	726-0201	Speed Nut,.3125
64	736-0160	Flat Washer,.531 x.93
65	738-04012	Shoulder Screw

†Models equipped with a 4-style fender can accept the cover w/ cup holder.
‡Models equipped with a 7-style fender can accept only a cup holder.

NOTE: *Tractor features vary by model. NOT all parts listed above and pictured on the previous page are standard equipment.*

https://truckmanualshub.com/

Model 618

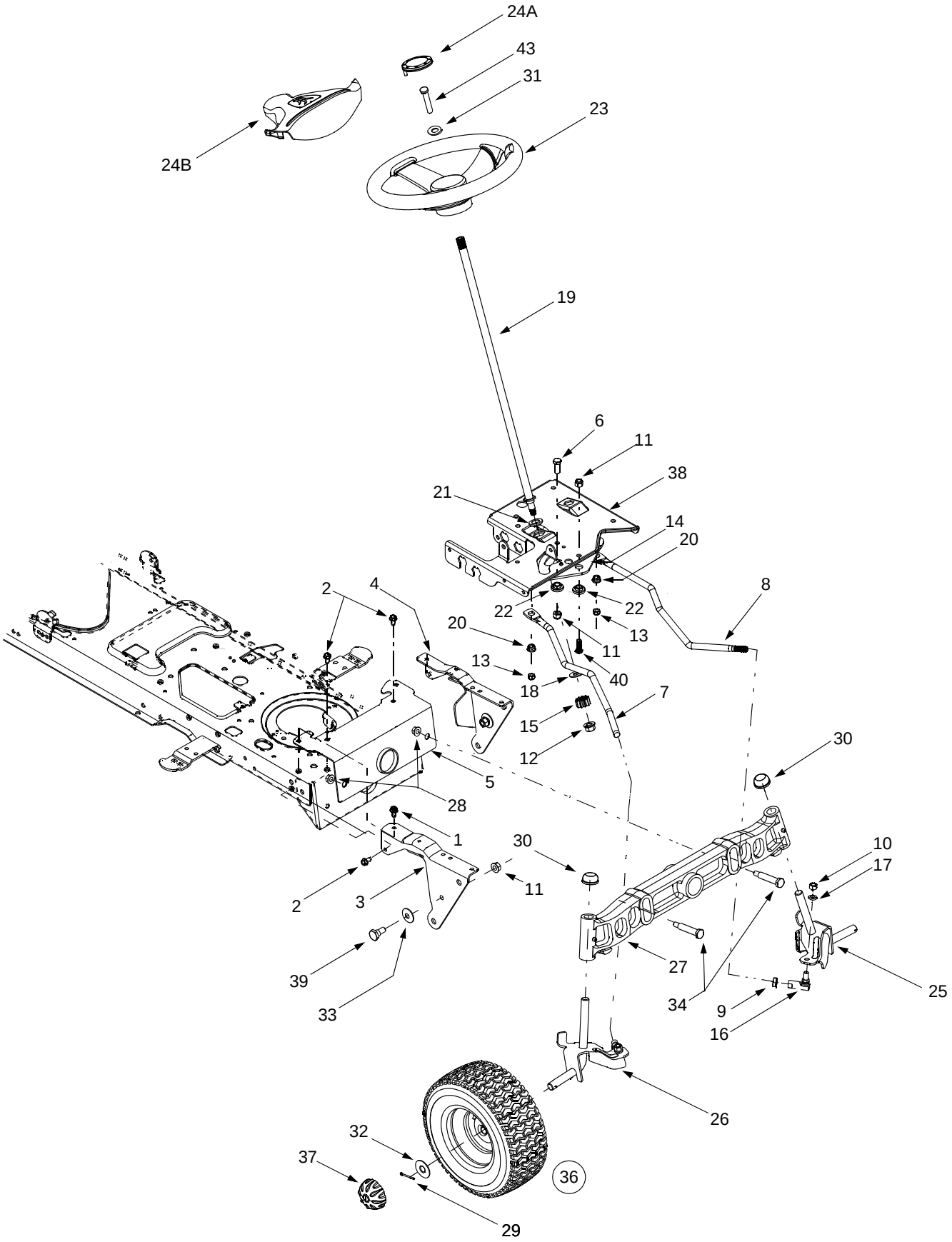

https://truckmanualshub.com/

Model 618

REF. NO.	PART NO.	DESCRIPTION	REF. NO.	PART NO.	DESCRIPTION
1	710-1260A	Self-tapping Screw, 5/16-18 x .75	25	638-04003	LH Axle Assembly, .75 Diameter
2	710-0604A	Self-tapping Screw, 16-18 x .625			(Models with 46-inch Deck)
3	783-0726B	RH Pivot Support Bracket		638-04006	LH Axle Assembly, .75 Diameter
4	783-0727A	LH Pivot Support Bracket			(Models with 42-inch Deck)
5	783-0728	Pivot Bar Bracket	26	638-04004	RH Axle Assembly, .75 Diameter
6	710-0514	Hex Cap Screw, 3/8-16 x 1.0 (Grade 5)			(Models with 46-inch Deck)
7	711-1408	RH Drag Link		638-04005	RH Axle Assembly, .75 Diameter
8	711-1409A	LH Drag Link			(Models with 42-inch Deck)
9	712-0240	Jam Nut, 7/16-20 (Grade 2)	27	719-0525C	Cast Iron Pivot Bar w/ Fittings, .75
10	712-0241	Hex Nut, 3/8-24 (Grade 2)	28	712-0130	Lock Nut, 3/8-16
11	712-0130	Lock Nut, 3/8-16	29	714-0162	Cotter Pin
12	712-0459	Flange Lock Nut, 7/16-20	30	726-0341	Push Cap, .750
13	712-0429	Lock Nut, 5/16-18	31	736-0242	Bell Washer, .34 x .872
14	717-1550E	Steering Segment, 11/90 Ratio	32	736-0316	Flat Washer, .78 x 1.59 x .06
15	717-1554	Steering Pinion Gear	33	736-0331	Bell Washer, .39 x 1.13 x .062
16	723-0448A	Ball Joint, 7/16-20	34	738-1011	Shoulder Screw, .5 x 2.2, 3/8-16
17	736-0169	Lock Washer, 3/8	35	710-0643	Hex Bolt, 5/16-18 X 1
18	736-3084	Flat Washer, .51 x 1.12 x .06	36	634-04087	Wheel Assembly Complete, 15 x 6 x 6
19	738-1001A	Steering Shaft, .625 OD x 24.4		634-04081	Rim Only w/ Plastic Bearing
20	741-0475	Plastic Bushing, .38 ID		734-0255	Air Valve (Not Shown)
21	741-0656A	Hex Flange Bearing, 5/8		734-04040	Tire Only, Square Shoulder
22	738-0372B	Shoulder Spacer, .38 ID	37	734-2290A	Hub Cap
23	631-04028	Steering Wheel: 3 Spoke	38	783-0653G	Steering Support Bracket
	631-04008	Steering Wheel: 3 Spoke Soft Grip	39	738-0143	Shoulder Screw, 3/8-16
24A	731-04040	Steering Wheel Cap, Small	40	710-04095	Hex Screw3/8-16 x 1.0
24B	731-04065	Steering Wheel Cap, Large			

NOTE: *Tractor features vary by model. NOT all parts listed above and pictured on the previous page are standard equipment.*

https://truckmanualshub.com/

Model 618

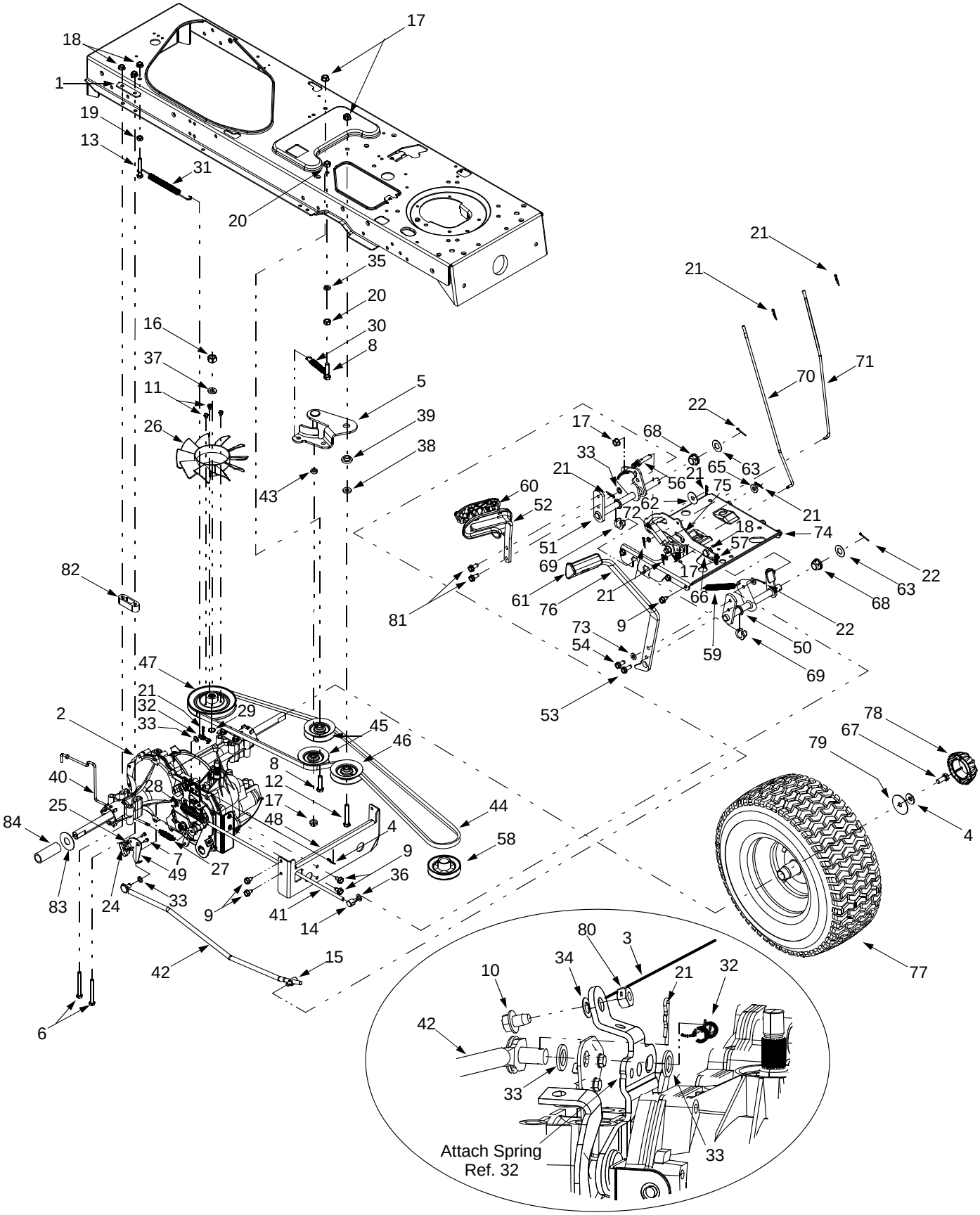

https://truckmanualshub.com/

Model 618

REF. NO.	PART NO.	DESCRIPTION
1	17840	Transaxle Mounting Bracket
2	618-0319	Hydrostatic Transmission
3	629-0949A	Reverse Wire Harness Adapter & Ground
4	736-0242	Bell Washer,.34 x.872
5	783-04442	Double Idler Bracket Assembly
6	710-0176	Hex Cap Screw, 5/16-18 x 2.75
7	710-0227	Screw, #8-18 x.5
8	710-0344	Hex Cap Screw, 3/8-16 x 1.5
9	710-0726	Self-tapping Screw, 5/16-18 x.625
10	710-0599	Self-tapping Screw, 1/4-20 x.375
11	710-3007	Screw, #12-24 x.375
12	710-3011	Hex Cap Screw, 3/8-16 x 2.25
13	710-3103	Hex Cap Screw, 5/16-18 x 2.0
14	711-0677	Ferrule, 5/16-18
15	711-0832	Ferrule, 3/8-24
16	712-0333	Hex Nut, 1/2-20
17	712-0431	Flange Lock Nut, 3/8-16
18	712-3004A	Flange Lock Nut, 5/16-18
19	712-3010	Hex Nut, 5/16-18
20	712-3017	Hex Nut, 3/8-16
21	714-0104	Internal Cotter Pin
22	714-0111	Cotter Pin
24	725-1644	Short Spring Switch
25	726-0320	Insulator Nut Plate
26	731-1449A	10-inch Fan
27	732-0209	Extension Spring,.48 x 2.03
28	732-0716	Extension Spring,.59 x 4.0
29	732-0729	Wire Ring
30	732-0429A	Extension Spring,.5 x 3.97
31	732-0994	Extension Spring,.5 x 7.0
32	732-3118	Extension Spring, 3/8 x 1.44
33	736-0140	Flat Washer,.385 x.62 x.063
34	736-0142	Flat Washer,.281 x.50 x.063
35	736-0169	Lock Washer, 3/8
36	736-0275	Flat Washer,.344 x.688 x.065
37	736-0921	Lock Washer, 1/2
38	736-3010	Flat Washer,.407 x.812 x.135
39	738-0372B	Shoulder Spacer,.38
40	747-1149	Hydrostatic Bypass Rod
41	747-1150	Hydrostatic Brake Rod
42	747-1151	Hydrostatic Control Rod
43	750-0535	Spacer,.376 x.625 x.22
44	754-0349	Drive Belt
45	756-0116	V-idler Pulley, 3.06

REF. NO.	PART NO.	DESCRIPTION
46	756-0981A	Flat Idler Pulley, 2.75
47	756-1166	Input Pulley, 5.0
48	783-0810B	Transmission Torque Bracket
49	783-1019	Switch Actuator Bracket
50	647-0031C	Brake Control Assembly
51	647-0049A	Drive Control Assembly
52	683-0267C	Hydro Pedal Assembly
53	710-0650	Self-tapping Screw, 5/16-18 x.875
54	710-1611B	Self-tapping Screw, 5/16-18 x.75
56	711-1363	Pin, 3/8-16 x 2.43
57	732-0335	Compression Spring,.405 OD x 1.17
58	756-0983B	Engine Pulley
59	732-0963	Extension Spring,.50 OD x 6.37
60	735-0662	Drive Pedal Pad
61	735-3049	Brake Pedal Pad
62	736-0133	Flat Washer,.411 x 1.25 x 1.0
63	736-0187	Flat Washer,.64 x 1.24 x.06
65	736-3004	Flat Washer,.406 x.875 x.105
66	738-0155	Shoulder Screw,.437 x 1.62
67	710-0627	Hex Cap Screw, 5/16-24 x.75
68	741-0225	Hex Flange Bearing
69	741-3065B	Split Hex Flange Bearing
70	747-04096	Cruise Control Rod
71	747-04093	Brake Lock Control Rod
72	748-04039A	Cruise Latch
73	736-3008	Flat Washer,.344 x.750 x.120
74	783-0653F	Steering Support Bracket
75	783-0663C	Drive Lockout Bracket
76	783-0773A	Brake Pedal
77	634-0177	Wheel Assembly Complete
		20 x 10 x 8 Square Shoulder
	634-0104	Wheel Assembly Complete
		20 x 8 x 8 Square Shoulder
	634-0070	Rim Assembly Only
	734-0255	Air Valve (Not Shown)
	734-1873	Tire Only, 20 x 10 x 8, Square Shoulder
	734-1730	Tire Only, 20 x 8 x 8, Square Shoulder
78	734-2290A	Deluxe Hub Cap (Ref. 79 Required)
79	736-0430	Flat Washer,.350 x 1.59 x.062
80	712-0291	Hex Lock Nut, 1/4-20
81	710-1260A	Screw, 5/16-18 x.750
82	748-0334	Axle Spacer
83	736-0866	Flat Washer, .755 x 1.92 x .060
84	731-04682	Axle Sleeve

IMPORTANT: For a proper working machine, use Factory Approved Parts. **V-belts** are designed to engage and disengage safely. A substitute (non OEM) V-belt can be dangerous by not disengaging completely.

NOTE: *Tractor features vary by model. NOT all parts listed above and pictured on the previous page are standard equipment.*

https://truckmanualshub.com/

Model 618 (w/ Electric PTO)

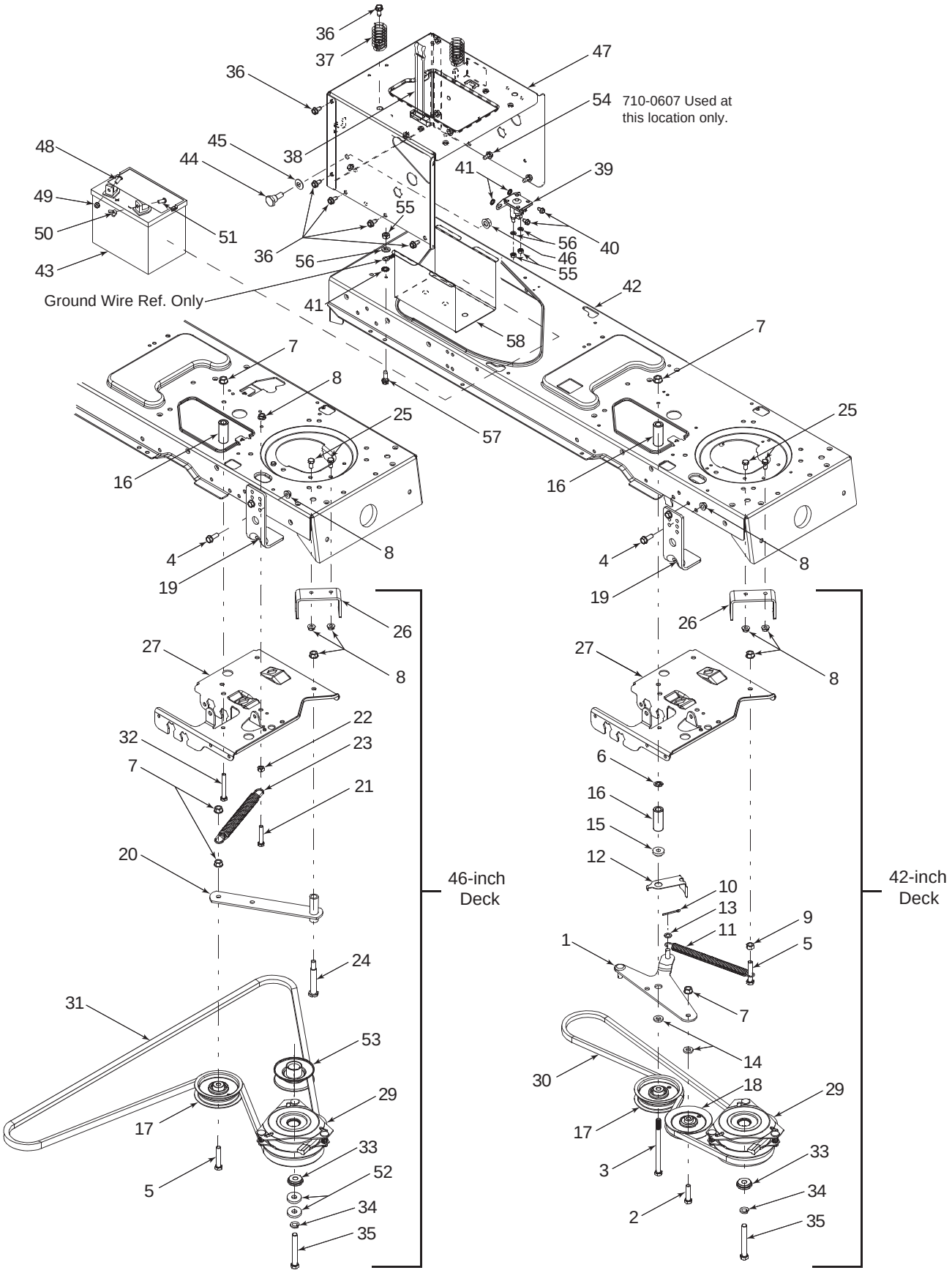

https://truckmanualshub.com/

Model 618

REF. NO.	PART NO.	DESCRIPTION
1	683-0450	Engagement Plate Assembly
2	710-0520	Hex Cap Screw, 3/8-16 x 1.5
3	710-0831	Hex Cap Screw, 3/8-16 x 5.5
4	710-1238	Hex Head Washer Screw, 5/16-18 x.875
5	710-3144	Hex Cap Screw, 3/8-16 x 2.0
6	712-0229	Push Nut, 3/8
7	712-0431	Flange Lock Nut, 3/8-16
8	712-3004A	Flange Lock Nut, 5/16-18
9	712-3017	Hex Nut, 3/8-16
10	714-0470	Cotter Pin, 1/8 x 1.25
11	732-0384	Extension Spring,.62 x 6.12
12	732-0991A	Belt Guard
13	736-0140	Flat Washer,.385 x.62 x.063
14	736-3010	Flat Washer,.407 x.812 x.135
15	738-0372A	Shoulder Spacer,.380
16	748-0415B	Spacer, 3/8 x 1.54
17	756-0627B	Idler Pulley, 3.5
18	756-1208	Idler Pulley, 4.0
19	783-0891B	Deck Stop
20	683-0297	Idler Bracket Assembly
21	710-3180	Hex Cap Screw, 5/16-18 x 1.75
22	712-3010	Hex Nut, 5/16-18
23	732-0978	Extension Spring,.62 x 5.62
24	738-3056	Shoulder Screw, 1/2 x 2.5
25	710-3025	Hex Cap Screw, 5/16-18 x.625
26	783-1003	Electric Clutch Anti-rotation Bracket
27	783-0653F	Steering Support Bracket
29	717-04080	Electric PTO Clutch
30	754-0497	PTO Belt (Models w/ 42-inch deck)

REF. NO.	PART NO.	DESCRIPTION
31	754-04033	PTO Belt (Models w/ 46-inch deck)
32	710-0859	Hex Cap Screw, 3/8-16 x 2.5
33	738-0785	Shoulder Spacer, 1.38 x.445 x.36
34	736-0171	Lock Washer, 7/16
35	710-3157	Hex Cap Screw, 7/16-20 x 3.25 (Grade 5)
36	710-0604A	Self Tapping Screw, 5/16-18 x.625
37	732-04035	Compression Spring, 1.28 x 3.125
38	723-0444	Battery Strap
39	725-1426	Solenoid, 12-Volt, 100 Amp
40	710-0599	Self Tapping Screw, 1/4-20 x.5
41	736-0222	Lock Washer, 1/4
42	683-0304C	Lower Frame Assembly
43	725-1706	12-volt Battery, 270 CCA
44	738-1020	Shoulder Screw,.625 x.5, 7/16-20
45	736-0407	Bell Washer,.45 x 1.0 x.062
46	712-0459	Flange Lock Nut, 7/16-20
47	783-1031A	Hitch Plate
48	710-0703	Hex Cap Screw, 1/4-20 x.75
49	712-0271	Hex Sems Nut, 1/4-20
50	712-3087	Wing Nut, 1/4-20
51	738-1132	Shoulder Screw, 1/4-20,.25 x.15
52	736-0322	Flat Washer,.4375 x 1.25 x.180
53	756-0639A	Engine Pulley
54	710-0607	Self-tapping Screw, 5/16-18 x.5
55	712-3006	Hex Nut, 1/4-20
56	736-0329	Lock Washer, 1/4
57	710-0642	Self-tapping Screw, 1/4-20 x.75
58	783-0349	Battery Tray

IMPORTANT: For a proper working machine, use Factory Approved Parts. **V-belts** are designed to engage and disengage safely. A substitute (non OEM) V-belt can be dangerous by not disengaging completely.

NOTE: *Tractor features vary by model. NOT all parts listed above and pictured on the previous page are standard equipment.*

https://truckmanualshub.com/

Model 618 (w/ Manual PTO)

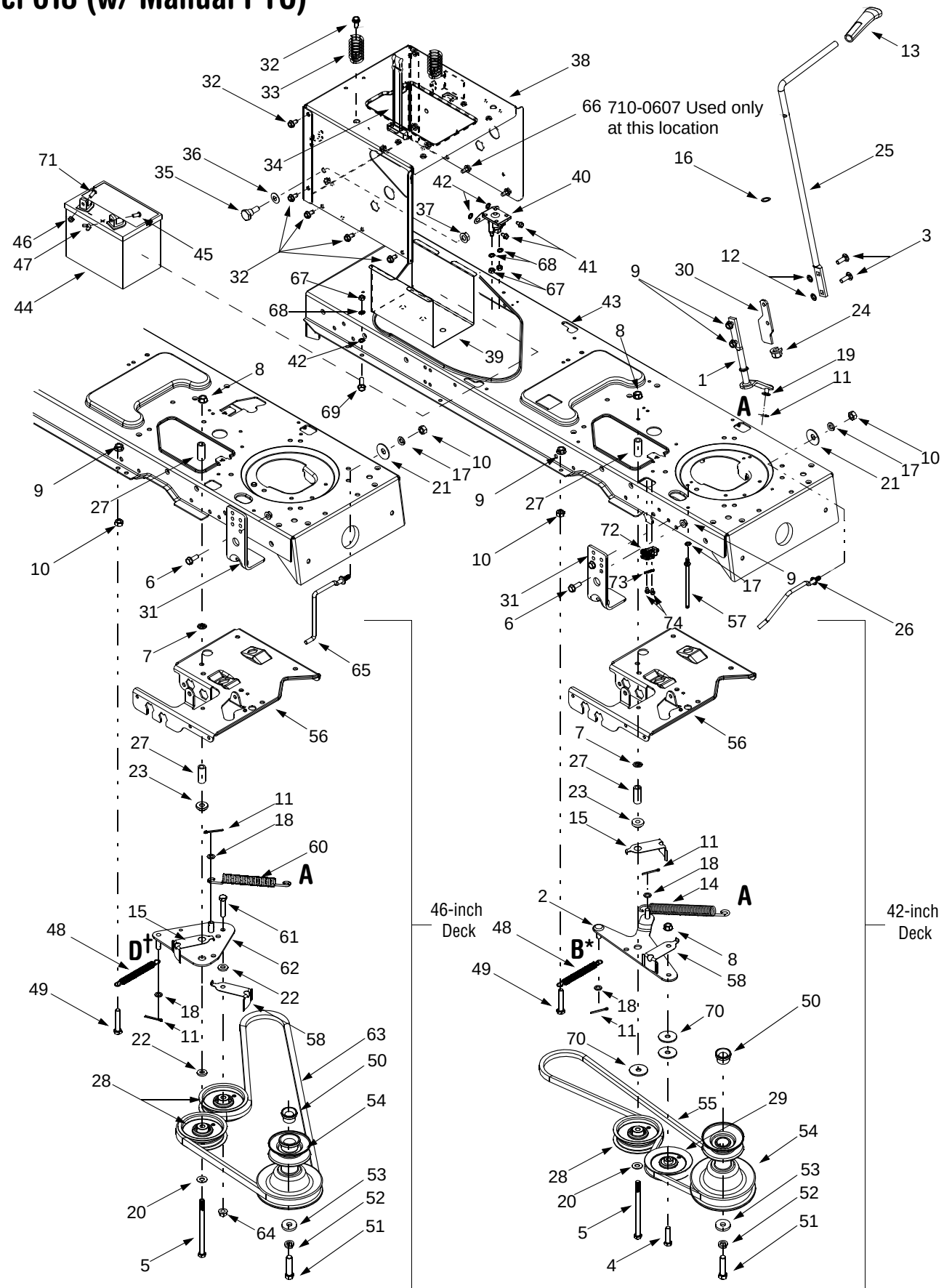

† Refer to **D** on page 46.

* Refer to **B** on page 44.

https://truckmanualshub.com/

Model 618

REF. NO.	PART NO.	DESCRIPTION
1	647-0064	PTO Engage Lever Assembly
2	683-0450	PTO Engage Plate Assembly
3	710-0276	Carriage Screw, 5/16-18 x 1.00
4	710-0520	Hex Cap Screw, 3/8-16 x 1.5
5	710-0831	Hex Cap Screw, 3/8-16 x 5.5
6	710-1238	Hex Head Washer Screw, 5/16-18 x.875
7	712-0229	Push Nut, 3/8
8	712-0431	Flange Lock Nut, 3/8-16
9	712-3004A	Flange Lock Nut, 5/16-18
10	712-3010	Hex Nut, 5/16-18
11	714-0470	Cotter Pin, 1/8 x 1.25
12	726-0201	Speed Nut,.3125
13	731-2111A	PTO Knob
14	732-1170	Extension Spring,.75 x 6.75
15	732-0991A	Belt Guard
16	736-0108	Flat Washer,.510 x.750 x.033
17	736-0119	Lock Washer, 5/16
18	736-0140	Flat Washer, .385 x .62 x .063
19	736-0275	Flat Washer, 5/16
20	736-0300	Flat Washer,.406 x.875 x.059
21	736-0242	Bell Washer,.345 x.88 x.060
22	736-3010	Flat Washer,.407 x.812 x.135
23	738-0372B	Shoulder Spacer,.380
24	741-0708	Hex Split Flange Bearing,.5
25	747-1112D	PTO Engagement Handle
26	747-1286A	Belt Keeper Rod
27	748-0415B	Spacer, 3/8 x 1.54
28	756-0627B	Idler Pulley, 3.5
29	756-1208	Idler Pulley, 4.0
30	783-0744A	Engagement Stop
31	783-0891B	Deck Stop
32	710-0604A	Self Tapping Screw, 5/16-18 x.625
33	732-04035	Compression Spring, 1.28 x 3.5
34	723-0444	Battery Strap
35	738-1020	Shoulder Screw,.625 x.5, 7/16-20
36	736-0407	Bell Washer,.45 x 1.0 x.062
37	712-0459	Flange Lock Nut, 7/16-20
38	783-1031A	Hitch Plate
39	783-0349	Battery Tray
40	725-1426	Solenoid, 12-Volt, 100 Amp
41	710-0599	Self Tapping Screw, 1/4-20 x.5
42	736-0222	Lock Washer, 1/4
43	683-0304C	Lower Frame Assembly
44	725-1706A	12-volt Battery, 270 CCA
	725-1737	12-volt Battery, 190 CCA
45	738-1132	Hex Cap Screw, 1/4-20
46	712-0271	Hex Sems Nut, 1/4-20
47	712-3087	Wing Nut, 1/4-20
48	732-1165	Extension Spring,.50 x 5.0
49	710-3180	Hex Cap Screw, 5/16-18 x 1.75
50	750-0956	Spacer Cup
51	710-3029	Hex Head Cap Screw, 7/16-20 x 1.25
52	736-0171	Lock Washer, 7/16
53	736-0322	Flat Washer,.450 x 1.25
54	756-0983B	Engine Pulley, 3.56 OD x 5.56
55	754-0497	PTO Belt (Models w/ 42-inch deck)
56	783-0653F	Steering Support Bracket
57	711-1044	Keeper Pin, 5/16 x 4.75
58	732-1013	Belt Guard
59	710-3025	Hex Cap Screw, 5/16-18 x.625
60	732-0944	Extension Spring,.75 x 6.75
61	710-0347	Hex Cap Screw, 3/8-16 x 1.75
62	683-0302	PTO Engagement Plate Assembly
63	754-0486A	PTO Belt (Models w/ 46-inch deck)
64	712-0431	Flange Lock Nut, 3/8-16
65	747-1243	Belt Keeper Rod
66	710-0607	Self-tapping Screw, 5/16-18 x.5
67	712-3006	Hex Nut, 1/4-20
68	736-0329	Lock Washer, 1/4
69	710-0642	Self-tapping Screw, 1/4-20 x.75
70	736-3039	Flat Washer,.406 x 1.5 x 11 gauge
71	710-0703	Carriage Bolt, 1/4-20 x.75
72	725-04039	Safety Interlock Switch
73	17962	Switch Plate
74	710-0224	Screw, #10 x.5

IMPORTANT: For a proper working machine, use Factory Approved Parts. **V-belts** are designed to engage and disengage safely. A substitute (non OEM) V-belt can be dangerous by not disengaging completely.

NOTE: *Tractor features vary by model. NOT all parts listed above and pictured on the previous page are standard equipment.*

https://truckmanualshub.com/

Model 618

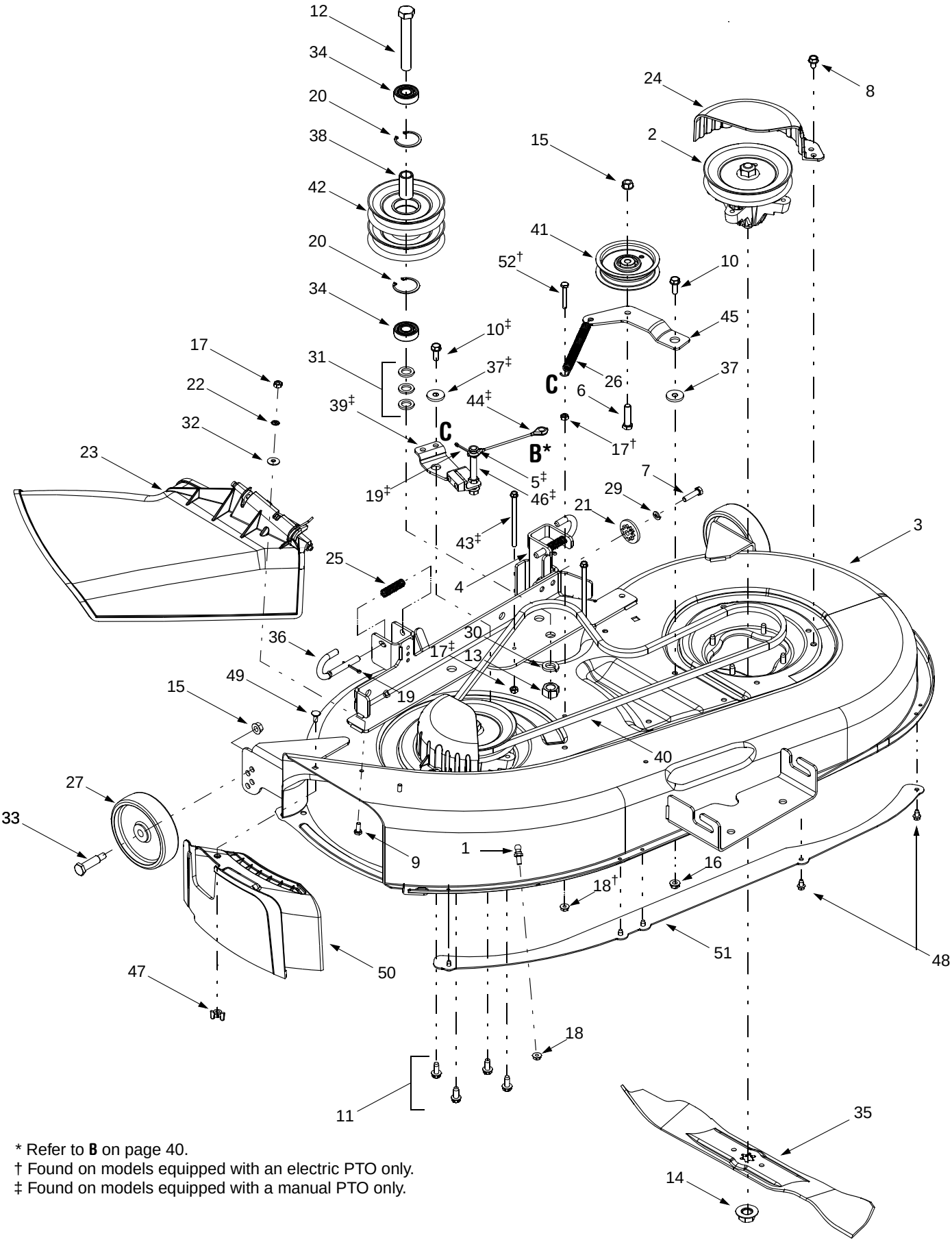

* Refer to **B** on page 40.
† Found on models equipped with an electric PTO only.
‡ Found on models equipped with a manual PTO only.

https://truckmanualshub.com/

Model 618

REF. NO.	PART NO.	DESCRIPTION
1	711-04069	Grass Catcher Pin
2	618-0565	Spindle Assembly, 5.75 Dia.
	756-0980	Pulley Only
3	683-0198G	42-inch Deck Shell
4	683-0254	Deck Adjustment Bracket w/ Weld Nut
5	736-0140	Flat Washer,.385 x.62 x.063
6	710-0520	Hex Cap Screw, 1/4-20 x 1.5
7	710-0528	Hex Cap Screw, 5/16-18 x 1.25
8	710-0726	Self-tapping Screw, 5/16-18 x.75
9	710-0751	Hex Cap Screw, 1/4-20 x.62
10	710-1238	Hex Head Washer Screw, 5/16-18 x.875
11	710-0650	Self-tapping Screw, 5/16-18 x.75
12	710-3151	Hex Cap Screw, 5/8-18 x.875
13	712-0337	Hex Nut, 5/8-18
14	712-0417A	Hex Flange Nut, 5/8-18
15	712-0431	Flange Lock Nut, 3/8-16
16	712-3004A	Flange Lock Nut, 5/16-18
17	712-3006	Hex Nut, 1/4-20
18	712-3027	Hex Flange Lock Nut, 1/4-20
19	714-0470	Cotter Pin, 1/8 x 1.25
20	716-3020	Internal Snap Ring
21	717-04074	Deck Adjustment Gear
22	726-0233	Push Nut.25 x.5
23	731-1032B	Side Discharge Chute Assembly
24	731-2486A	Belt Cover
25	732-0306	Compression Spring,.406 x.531 x 1.75

REF. NO.	PART NO.	DESCRIPTION
26	732-0470A	Extension Spring,.50 x 4.74
27	734-0973	Deck Wheel, 5 x 1.38
29	736-0119	Lock Washer, 5/16
30	736-0158	Lock Washer, 5/8
31	736-0162	Flat Washer,.64 x 1.0 x.12
32	736-0270	Bell Washer,.265 x.75 x.062
33	738-0373	Shoulder Screw,.498 x 1.53
34	741-0524	Bearing,.625 x 1.574 x.470
35	742-0616A	Three-in-one Blade, Star Center, 21.23"
36	747-1116	Deck Release Pin
37	748-0331	Shoulder Spacer,.625 x.324
38	750-0932A	Spacer,.635 x.88 x 1.72
39	683-0440	Deck Brake Assembly
40	754-0498	Deck Belt
41	756-0627B	Idler Pulley, 3.5
42	756-1202	Double Pulley, 5.0
43	710-1830	Self-tapping Screw, 1/4-20 x 4.0
44	746-0970	Brake Cable, 5.05
45	783-1291	Idler Bracket
46	711-1534	Pin, 3/8-16, 3/8 x 3.27
47	712-3087	Wing Nut, 1/4-20
48	710-0599	Self-tapping Screw, 1/4-20 x.5
49	710-0134	Carriage Screw, 1/4-20 x.62
50	731-2363	Mulch Plug
51	783-1146A	Deck Skirt
52	710-0136	Hex Cap Screw, 1/4-20 x 1.75

IMPORTANT: For a proper working machine, use Factory Approved Parts. **V-belts** are designed to engage and disengage safely. A substitute (non OEM) V-belt can be dangerous by not disengaging completely.

NOTE: *Tractor features vary by model. NOT all parts listed above and pictured on the previous page are standard equipment.*

https://truckmanualshub.com/

Model 618

46-inch Deck Brake Assembly

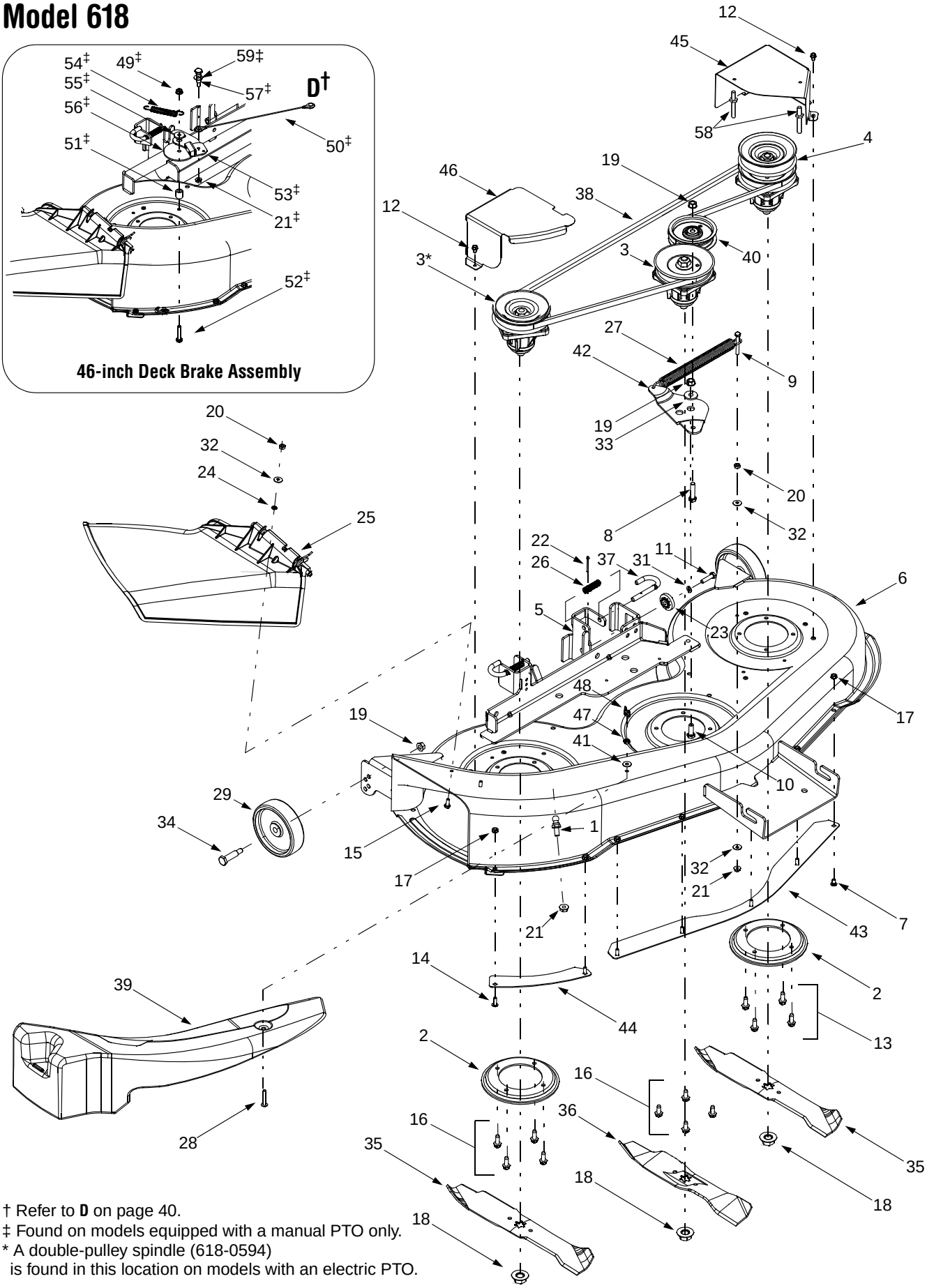

† Refer to **D** on page 40.
‡ Found on models equipped with a manual PTO only.
* A double-pulley spindle (618-0594) is found in this location on models with an electric PTO.

https://truckmanualshub.com/

Model 618

REF. NO.	PART NO.	DESCRIPTION
1	711-04069	Grass Catcher Pin
2	17982	Spindle Reinforcement Plate
3	618-0240A	Spindle Assembly, 5.0 Dia.
	756-1187	Pulley Only
4	618-0594	Double Pulley Spindle Assembly
	618-0241	Double Pulley Spindle Ass'y -Electric PTO
	756-0603	Pulley Only
5	683-0254	Deck Adjustment Bracket w/ Weld Nut
6	683-04103	46-inch Deck Shell
7	710-0167	Carriage Screw, 1/4-20 x.50
8	710-0344	Hex Cap Screw, 3/8-16 x 1.5
9	710-0501	Hex Cap Screw, 1/4-20 x 2.0
10	710-0514	Hex Cap Screw, 3/8-16 x 1.0
11	710-0528	Hex Cap Screw, 5/8-18 x 1.25
12	710-0599	Self-tapping Screw,1/4-20 x.5
13	710-0650	Self-tapping Screw,15/16-18 x.875
14	710-0703	Hex Screw, 1/4-20 x.75
15	710-0751	Hex Cap Screw, 1/4-20 x.62
16	710-1260A	Self-tapping Screw, 5/16-18 x.75
17	712-0271	Hex Sems Nut, 1/4-20
18	712-0417A	Hex Flange Nut, 5/8-18
19	712-0431	Flange Lock Nut, 3/8-16
20	712-3006	Hex Nut, 1/4-20
21	712-3027	Hex Flange Lock Nut, 1/4-20
22	714-0470	Cotter Pin, 1/8 x 1.25
23	717-04074	Deck Adjustment Gear
24	726-0233	Push Nut.25 x.5
25	731-1032B	Side Discharge Chute Assembly
26	732-0306	Compression Spring,.406 x.531 x 1.75
27	732-0594A	Extension Spring,.91 x 7.3
28	710-0578†	Screw, 1/4-20 x 1.5

REF. NO.	PART NO.	DESCRIPTION
29	734-0973	Deck Wheel, 5 x 1.38
31	736-0119	Lock Washer, 5/16
32	736-0270	Bell Washer,.265 x.75 x.062
33	738-0347	Shoulder Spacer,.625 x 1.16
34	738-0373	Shoulder Screw
35	742-0611	Three-in-one Blade, Star Center, 16.28"
36	742-0612	Three-in-one Blade, Star Center, 14.88"
37	747-1116	Deck Release Pin
38	754-0349	Deck Belt, Poly
39	731-1636	Mulch Plug
40	756-0627B	Idler Pulley, 3.5
41	736-0173	Flat Washer,.28 x.74 x.063
42	783-0139A	Idler Bracket
43	783-0141	Center Deck Skirt
44	783-0142	RH Deck Skirt
45	783-1348A	LH Belt Cover
46	783-0805C	RH Belt Cover
	17258D	RH Belt Cover (Manual PTO)
47	712-3006	Hex Nut, 1/4-20
48	712-3087	Wing Nut, 1/4-20
49	712-3004A	Hex Nut, 5/16-18
50	746-1107	Bracket Cable, 12"
51	750-1320	Spacer,.385 x.625 x.70
52	710-0805	Hex Cap Screw, 5/16-18 x 1.5
53	17116	Deck Brake Assembly
54	732-0429A	Extension Spring,.5 x 3.97
55	748-0324	Shoulder Spacer
56	736-0418A	Flat Washer,.34 x 2.25 x.1
57	711-1554	Pin, 1/4-20
58	711-0993	Belt Guard Pin
59	736-0140	Flat Washer,.385 x.62 x.06

IMPORTANT: For a proper working machine, use Factory Approved Parts. **V-belts** are designed to engage and disengage safely. A substitute (non OEM) V-belt can be dangerous by not disengaging completely.

NOTE: *Tractor features vary by model. NOT all parts listed above and pictured on the previous page are standard equipment.*

https://truckmanualshub.com/

Model 618

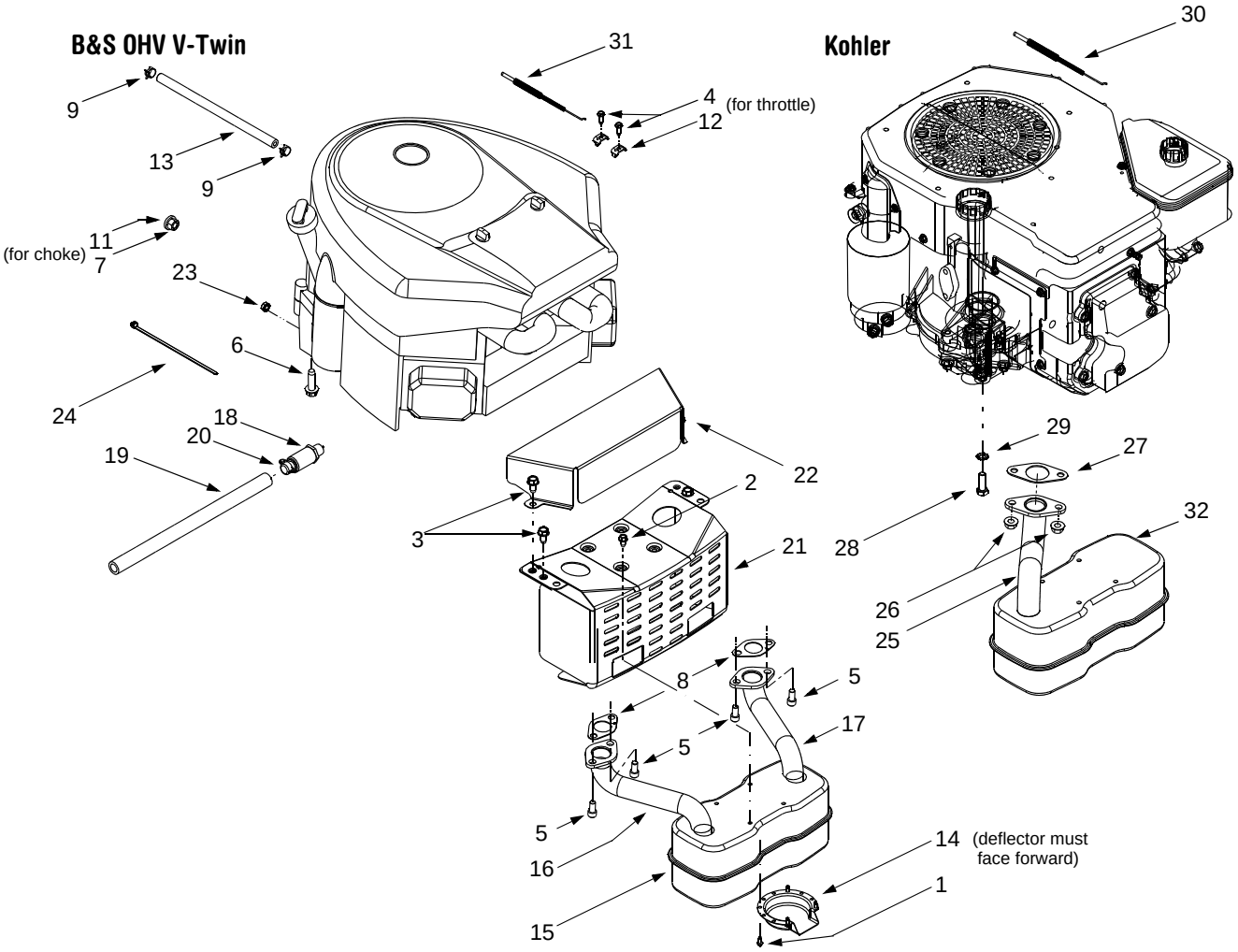

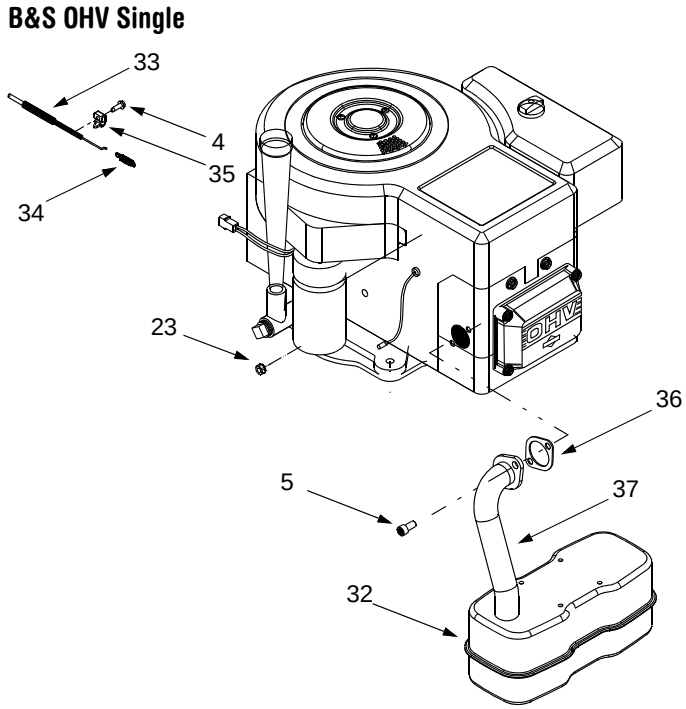

https://truckmanualshub.com/

Model 618

REF. NO.	PART NO.	DESCRIPTION
1	710-0227	Self-tapping Screw, #8-18 x.50
2	710-0599	Self-tapping Screw, 1/4-20 x.50
3	710-0726	Self-tapping Screw, 5/16-18 x.625
4	710-1237	Screw, #10-32 x.625 (B&S OHV V-Twin)
5	710-1314A	Socket Cap Screw, 5/16-18 x.625
6	710-1315	Self-tapping Screw, 3/8-16 x 1.25
7	712-3017	Hex Nut, 3/8-16
8	721-0460	Exhaust Gasket (B&S OHV V-Twin)
9	726-0205	Hose Clamp
10	751B213146	Casing Clamp (B&S OHV Single)
11	736-0300	Lock Washer,.406 x.875 x.059
12	751B221535	Casing Clamp (B&S OHV V-Twin)
13	751-0535	Fuel Line Hose
14	751-0564A	Muffler Deflector
15	751-0616A	Muffler, Twin Inlet (B&S OHV V-Twin)
16	751-0650A	RH Exhaust Pipe (B&S OHV V-Twin)
17	751-0651A	LH Exhaust Pipe (B&S OHV V-Twin)
18	751-3140	Oil Drain Valve
19	751-3141	Oil Drain Hose
20	751-3142	Oil Drain Cap
21	783-0615C	Muffler Heat Shield
22	783-0625C	Engine Heat Shield (B&S OHV V-Twin)
23	712-0271	Hex Sems Nut, 1/4-20 (B&S OHV V-Twin)
24	725-0157	Cable Tie
25	751-0621	Exhaust Pipe (Kohler)
26	712-3086	Flange Nut, 8mm (Kohler)
27	721-0375	Exhaust Gasket (Kohler)
28	710-3206A	Hex Cap Screw, 8mm (Kohler)
29	736-0607	External Lock Washer (Kohler)
30	746-1087	Throttle Cable (Kohler)
31	746-1086	Throttle Cable (B&S OHV V-Twin)
32	751-0617A	Muffler, Single Inlet (Kohler)
33	746-1084	Throttle Cable (B&S OHV Single)
34	732-0966	Extension Spring, .275 x 1.25 (B&S OHV Single)
35	751B213146	Casing Clamp (B&S OHV Single)
36	721-0208	Exhaust Gasket (B&S OHV Single)
37	751-0619A	Exhaust Pipe (B&S OHV Single)

NOTE: *Engine accessory parts are applicable to all 618 model tractors except where otherwise noted.*

https://truckmanualshub.com/

MANUFACTURER'S LIMITED WARRANTY FOR:

The limited warranty set forth below is given by MTD LLC with respect to new merchandise purchased and used in the United States, its possessions and territories.

"MTD"warrants this product against defects in material and workmanship for a period of two (2) years commencing on the date of original purchase and will, at its option, repair or replace, free of charge, any part found to be defective in materials or workmanship. This limited warranty shall only apply if this product has been operated and maintained in accordance with the Operator's Manual furnished with the product, and has not been subject to misuse, abuse, commercial use, neglect, accident, improper maintenance, alteration, vandalism, theft, fire, water, or damage because of other peril or natural disaster. Damage resulting from the installation or use of any part, accessory or attachment not approved by MTD for use with the product(s) covered by this manual will void your warranty as to any resulting damage.

Normal wear parts are warranted to be free from defects in material and workmanship for a period of thirty (30) days from the date of purchase. Normal wear parts include, but are not limited to items such as: batteries, belts, blades, blade adapters, grass bags, rider deck wheels, seats, snow thrower skid shoes, shave plates, auger spiral rubber and tires.

HOW TO OBTAIN SERVICE: Warranty service is available, WITH PROOF OF PURCHASE, through your local authorized service dealer. To locate the dealer in your area, check your Yellow Pages, or contact MTD LLC at P.O. Box 361131, Cleveland, Ohio 44136-0019, or call 1-800-800-7310 or 1-330-220-4683 or log on to our Web site at www.mtdproducts.com.

This limited warranty does **not** provide coverage in the following cases:

a. The engine or component parts thereof. These items may carry a separate manufacturer's warranty. Refer to applicable manufacturer's warranty for terms and conditions.
b. Log splitter pumps, valves, and cylinders have a separate one year warranty.
c. Routine maintenance items such as lubricants, filters, blade sharpening, tune-ups, brake adjustments, clutch adjustments, deck adjustments, and normal deterioration of the exterior finish due to use or exposure.
d. Service completed by someone other than an authorized service dealer.
e. MTD does not extend any warranty for products sold or exported outside of the United States, its possessions and territories, except those sold through MTD's authorized channels of export distribution.
f. Replacement parts that are not genuine MTD parts.
g. Transportation charges and service calls.

No implied warranty, including any implied warranty of merchantability of fitness for a particular purpose, applies after the applicable period of express written warranty above as to the parts as identified. No other express warranty, whether written or oral, except as mentioned above, given by any person or entity, including a dealer or retailer, with respect to any product, shall bind MTD. During the period of the warranty, the exclusive remedy is repair or replacement of the product as set forth above.

The provisions as set forth in this warranty provide the sole and exclusive remedy arising from the sale. MTD shall not be liable for incidental or consequential loss or damage including, without limitation, expenses incurred for substitute or replacement lawn care services or for rental expenses to temporarily replace a warranted product.

Some states do not allow the exclusion or limitation of incidental or consequential damages, or limitations on how long an implied warranty lasts, so the above exclusions or limitations may not apply to you.

In no event shall recovery of any kind be greater than the amount of the purchase price of the product sold. **Alteration of safety features of the product shall void this warranty.** You assume the risk and liability for loss, damage, or injury to you and your property and/or to others and their property arising out of the misuse or inability to use the product.

This limited warranty shall not extend to anyone other than the original purchaser or to the person for whom it was purchased as a gift.

HOW STATE LAW RELATES TO THIS WARRANTY: This limited warranty gives you specific legal rights, and you may also have other rights which vary from state to state.

IMPORTANT: Owner must present Original Proof of Purchase to obtain warranty coverage.

MTD LLC, P.O. BOX 361131 CLEVELAND, OHIO 44136-0019; Phone: 1-800-800-7310, 1-330-220-4683