https://truckmanualshub.com/

5676 (supersedes 5665)—0915—P8

Technical Data

Specifications & Capacities

138 HYLAB

HSL Crawler Crane

80 Ton *(72.6 metric ton)*

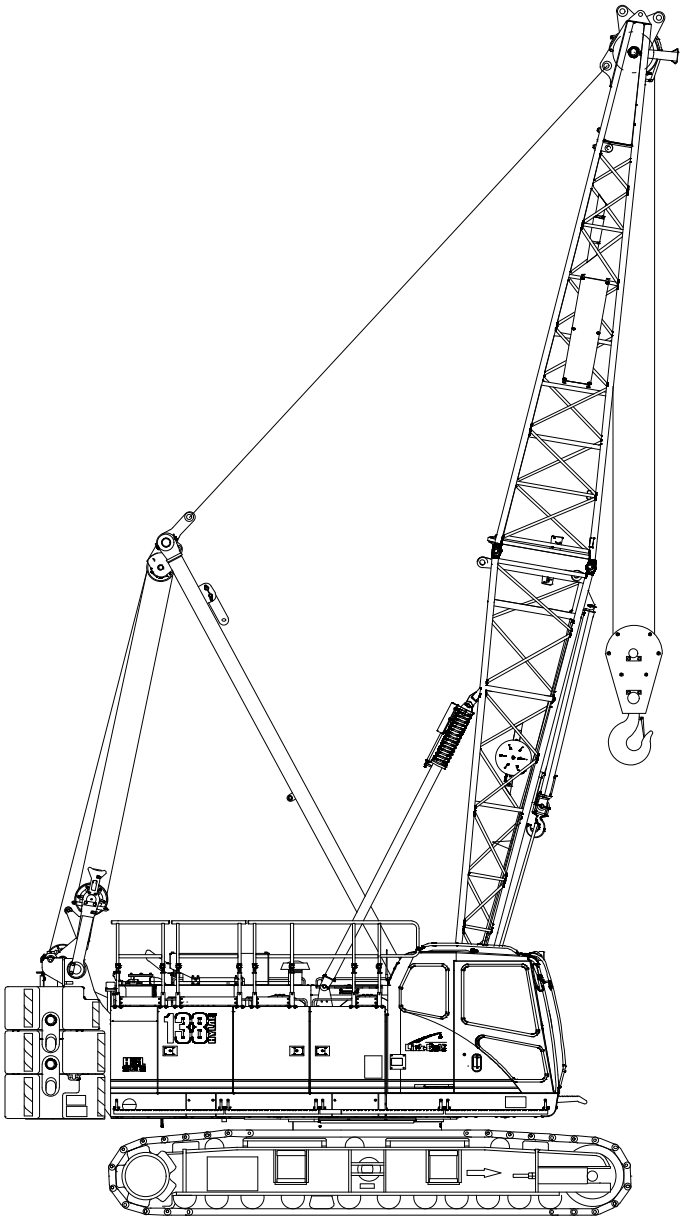

CAUTION: This material is supplied for reference use only. Operator must refer to in—cab Crane Rating Manual and Operator's Manual to determine allowable crane lifting capacities and assembly and operating procedures.

https://truckmanualshub.com/

https://truckmanualshub.com/

Table Of Contents

Upper Structure **1**
Frame 1
Engine 1
Hydraulic System 1
Load Hoist Drums 1
Optional Front—Mounted Third Hoist Drum 1
Optional Rear—Mounted Fourth Hoist Drum 2
Boom Hoist Drum 2
Swing System 2
Counterweight 2
Operator Cab 2
Rated Capacity Limiter System 2
Boom Hoist System 2
Machinery Cab 2
Catwalks 2
Lower Structure **3**
Carbody 3
Side Frames 3
Travel and Steering 3
Optional 3
Attachment and Options **3**
Conventional Tube Boom 3
Angle Boom 4
Tube Jib 4
Auxiliary Tip Extension 4
Dimensions **5**
Base Crane 7
Side Frames 7
Upper Counterweights 8
Boom 9
Jib 11
Hook Balls 12
Hook Blocks 13
Working Weights **13**
Transport Weights **14**
Transport Drawings — Tube Boom **15**
Load Hoist Performance **16**
Front or Rear Drum — 7/8 in (22.4mm) Wire Rope 16
Boom Hoist Drum — 5/8 in (16mm) Wire Rope 16
Front Mounted Third Drum — 5/8 in (16mm) Wire Rope 16
Rear Mounted Fourth Drum — 7/8 in (22.4mm) Wire Rope 16
Working Areas **17**
Attachments **18**
Tube Boom Make—up **19**

https://truckmanualshub.com/

Tube Boom Working Range Diagram **20**
Tube Boom Load Chart **21**
Angle Boom Make−up **23**
Angle Boom Working Range Diagram **24**
Angle Boom Load Chart **25**
Jib Attachment Make−up **26**
Tube Boom + Jib Working Range Diagram **27**
Tube Boom + Jib Load Charts **28**
Angle Boom + Jib Working Range Diagram **31**
Angle Boom + Jib Load Charts **32**

https://truckmanualshub.com/

Upper Structure

Frame

All welded steel frame with precision machined surfaces for mating parts.

Turntable Bearing

- Inner race with internal swing gear is bolted to lower frame.
- Outer is race bolted to upper frame.

Engine

Engine

Full pressure lubrication, oil filter, air cleaner, hour meter, throttle, and electric control shutdown.

Cummins QSB6.7 Tier 4 Final	
Number of cylinders	6
Bore and stroke	4.20 in x 4.88 in (*107 x 124mm*)
Piston displacement	408 in^3 *(6.8L)*
Engine rpm at full load speed	2,000 rpm
Hi-idle rpm	2,000 rpm
Gross engine hp	270 hp *(210kw)*
Peak torque	730 ft lb *(990joule)* @ 1,500 rpm
Electrical system	24 volt
Fuel tank capacity	122 gal *(460L)*
Batteries	2—12 volt
Approximate fuel consumption	gal/hr *(L/hr)*
100% hp	12.62 *(47.77)*
75% hp	10.57 *(40.01)*
50% hp	7.57 *(28.66)*
25% hp	4.16 *(15.75)*

Fuel Tank

Equipped with fuel sight level gauges, flame arrester, and self—closing cap with locking eye for padlock.

Hydraulic System

Hydraulic Pumps

The pump arrangement is designed to provide hydraulically powered functions allowing positive, precise control with independent or simultaneous operation of all crane functions.

- Two variable displacement pumps operating at 4,550 psi *(320kg/cm^2)* and 70 gal/min *(266L/min)* powers load hoist drums, boom hoist drum, optional third drum, optional fourth drum, and travel.
- One variable displacement pump operating at 4,625 psi *(325kg/cm^2)* and 40 gal/min *(152L/min)* powers the swing motor.
- One fixed displacement gear type pump operating at 2,985 psi *(210kg/cm^2)* and 15 gal/min *(57L/min)* powers the hydraulic counterweight self-assembly system, side frame extend/retract cylinder and optional quick draw cylinder.
- One fixed displacement gear type pump operating at 1,420 psi *(100kg/cm^2)* and 10 gal/min *(39L/min)* powers the hydraulic remote control system.
- One fixed displacement gear type pump operating at 1,420 psi *(100kg/cm^2)* and 8 gal/min *(30L/min)* powers the optional tagline winch.

Pump Control ("Fine Inching") Mode

Special pump setting, selectable from the operator's cab, that allows very slow movements of load hoist drums, boom hoist drum, and travel for precision work.

Hydraulic Reservoir

66 gal *(250L)*, equipped with sight level gauge. Diffusers built in for deaeriation.

Filtration

Ten micron, full flow, line filter in the control circuit. All oil is filtered prior to entering the reservoir.

Counterbalance Valves

All hoist motors are equipped with counterbalance valves to provide positive load lowering and prevent accidental load drop if the hydraulic pressure is suddenly lost.

Load Hoist Drums

Each drum contains an axial piston, fixed speed hydraulic motor with individual automatic winch motor brakes. Power flow is directed through a patented, semi—outboard mounted, "wet" style multi—disc brake. The brake is mounted on the "output" side of the planetary, which greatly reduces drag associated with most "wet" style brakes in free—fall mode.

- Power up/down & free—fall operation modes
- Automatic brake mode (spring applied, hydraulically released, wet type brake)
- Drum lagging grooved for wire rope
- Drum pawl controlled manually
- Electronic drum rotation indicators
- Mounted on anti—friction bearings
- 19.2 in *(488mm)* root diameter
- 33.1 in *(840mm)* flange diameter
- 20.8 in *(529mm)* width

The free—fall operation mode is designed to prevent load lowering even if the free—fall switch is accidentally activated.

The automatic brake mode meets all OSHA requirements for personnel handling.

Optional Front—Mounted Third Hoist Drum

The hydraulic winch is pinned to the front of the upper frame and is used in conjunction with a fleeting sheave and 3—sheave idler assembly to run the wire rope over the boom top section.

- Controlled free spooling capability for pile driving applications.
- 10.6 in *(270mm)* root diameter
- 20 in *(508mm)* flange diameter
- 13.5 in *(343mm)* width
- Mounted on anti—friction bearings

https://truckmanualshub.com/

Optional Rear—Mounted Fourth Hoist Drum

Drum contains an axial piston, variable speed hydraulic motor with individual automatic winch motor brakes. Power flow is directed through a patented, semi—outboard mounted, “wet” style multi—disc brake.

- Power up/down & free—fall operation modes
- Automatic brake mode (spring applied, hydraulically released, wet type brake)
- Drum lagging grooved for wire rope
- Drum pawl controlled manually
- Electronic drum rotation indicators
- Mounted on anti—friction bearings
- 18.0 in *(457mm)* root diameter
- 30.7 in *(780mm)* flange diameter
- 19 in *(483mm)* width
- Pins to rear of upper frame
- Plumbing and valving standard with main unit

The free—fall operation mode is designed to prevent load lowering even if the free—fall switch is accidentally activated.

The automatic brake mode meets all OSHA requirements for personnel handling.

Boom Hoist Drum

Contains a pilot controlled, bi—directional, axial piston motor and a planetary gear reduction unit to provide positive control under all load conditions.

- Spring applied, hydraulically released, disc type brake controlled automatically
- Drum lagging grooved for wire rope
- Drum pawl controlled automatically
- Mounted on anti—friction bearings
- 17.7 in *(450mm)* root diameter
- 28 in *(711mm)* flange diameter
- 8.8 in *(223mm)* width

Swing System

Mechanically controlled bi—directional axial piston motor and planetary gear reduction unit to provide positive control under all load conditions.

- Spring applied, hydraulically released, 360° multi—plate brake
- Free swing mode when lever is in neutral position
- Two position positive house lock
- Audio/Visual swing alarm
- Maximum swing speed is 4.7 rpm

Counterweight

Consists of a three—piece design that can be easily lowered to the ground using the gantry.

- “A” upper counterweight consists of one, 23,305 lb *(10 571kg)* base slab
- “B” upper counterweight consists of one, 16,944 lb *(7 686kg)* weight
- “C” upper counterweight consists of one, 12,071 lb *(5 475kg)* weight

Total combined counterweight is 52,320 lb *(23 732kg)*.

Operator Cab

Fully enclosed modular steel compartment is independently mounted and padded to protect against vibration and noise.

- All tinted/tempered safety glass
- Folding hinge entry door and sliding front glass window
- 19,000 BTU hot water heater
- 18,600 BTU air conditioner
- Door and window locks
- Circulating fan
- Sun visor
- Cloth seat
- Defroster
- Windshield wipers and washer
- Dry chemical fire extinguisher
- Engine instrumentation panel (voltmeter, engine oil pressure, engine water temperature, fuel level, hydraulic oil temperature, hour meter, and service monitor system)
- Electronic drum rotation indicators for front and rear hoist drums
- Rearview camera
- Six way adjustable seat
- Hand and foot throttle
- Fully adjustable single axis controls
- Swing lever with swing brake and horn located on handle
- Bubble type level
- Ergonomic gauge layout
- Controls shut off lever
- Control stand is adjustable for operator comfort.

Rated Capacity Limiter System

The HSL rated capacity limiter system is a boom hoist, dead end load cell system. This system provides the operator with useful geometrical data, to include:

- Main Boom Length
- Main Boom Angle
- Jib Length
- Jib Angle
- Operating Mode
- Load Radius
- Boom Tip Height
- Audible Alarm
- Pre—Warning Light
- Overload Light
- Load On Hook
- Function kick—outs including over load
- Operator settable stops (ramped stops)
- Anti—Two Block Indicator

Boom Hoist System

Designed to lift off maximum boom or maximum boom plus jib unassisted. Operates up to a maximum boom angle of 80°. Boom hoist limit system limits maximum boom angle operation.

- 14—part reeving with 16mm (0.63 in) wire rope
- 22 ft *(6.71m)* live mast
- Bridle assembly
- Two 1.25 in *(32mm)* pendants
- Dual telescoping type backstops
- Sheaves contain sealed anti—friction bearings
- Boom speed from 25°—70° is 36.3 seconds with no load. Speed was determined using 80 ft *(24.38m)* of angle boom.

Machinery Cab

Hinged doors (four on right side, three on left side) for machinery access. Storage/rigging box located on operator’s side of upper house. Equipped with rooftop access ladder and skid resistant finish on roof.

Catwalks

Standard on right and left sides. Catwalks are removable for reduced travel width.

https://truckmanualshub.com/

Lower Structure

Carbody

Lower Frame

All welded high strength steel [65,000 psi *(448.16MPa)* yield] box construction frame with precision machined surfaces for turntable bearing and rotating joint.

- 9 ft 2.3 in *(2.80m)* overall width
- 11 ft 10.9 in *(3.63m)* overall length

Side Frames

Side Frames

All welded, precision machined, steel frames can be hydraulically extended and retracted by a hydraulic cylinder mounted in the lower frame.

- 14 ft *(4.27m)* extended gauge
- 8 ft 11 in *(2.72m)* retracted gauge
- 20 ft 2 in *(6.15m)* overall length
- 36 in *(0.91m)* wide track shoes
- Sealed (oil filled) idler and drive planetaries
- Compact travel drives
- Hydraulic self adjusting tracks

Track Rollers

- Eleven sealed (oil filled) track rollers per side frame
- Heat treated, mounted on oil filled anti—friction bearings

Tracks

Heat treated, self—cleaning, multiple hinged track shoes joined by one—piece full floating pins; 52 shoes per side frame

Take Up Idlers

Cast steel, heat treated, self—cleaning, mounted on aluminum/bronze bushings. Lubricated through idler shaft.

Travel and Steering

Travel and Steering

Each side frame contains a pilot controlled, bi—directional, axial piston motor and a planetary gear reduction unit to provide positive control under all load conditions.

- Individual control provides smooth, precise maneuverability including full counter—rotation.
- Spring applied, hydraulically released disc type brake controlled automatically
- Maximum travel speed is 1.1 mph *(1.7km/h)* in high speed and 0.7 mph *(1.1km/h)* in low speed.
- Designed to 30% gradeability

Optional

- Rud—o—matic□ model 1248 tagline winder for angle boom (double barrel, spring wound, drum type)

Attachment and Options

Conventional Tube Boom 40—200 ft *(12.19—60.96m)*

Basic Boom

40 ft *(12.19m)* two—piece design that utilizes a 20 ft *(6.10m)* base section and a 20 ft *(6.10m)* open throat top section with in—line connecting pins on 54 in *(1.37m)* wide and 44 in *(1.12m)* deep centers.

- Boom foot on 43.5 in *(1.10m)* centers
- 3 in *(7.62cm)* diameter chords
- Lugs on base section for self assembly
- Deflector roller on top section
- Permanent skid pads mounted on top section to protect head machinery
- Rigid sheave guards
- Five, 18 in *(0.46m)* root diameter steel sheaves mounted on sealed anti—friction bearings
- Mechanical boom angle indicator

Optional

Self assembly system that mounts in the boom base to allow loading/unloading of counterweights or a boom section.

Tube Boom Extensions

The following table provides the lengths available and the suggested quantity to obtain maximum boom in 10 ft *(3.05m)* increments. Midpoint pendant connections are required at 80 ft *(24.38m)* for boom lengths of 170 ft *(51.80m)* thru 200 ft *(60.96m)*.

Tube Boom Extensions		Quantity For Max Boom
ft	*m*	
10	*3.05*	1
20	*6.10*	3
30	*9.14*	3

- Wear bars on top of each section
- Appropriate length pendants
- Maximum tip height of 204 ft *(62.18m)*
- Boom connecting pins storage on each extension

https://truckmanualshub.com/

Angle Boom
40—150 ft *(12.19—45.72m)*

Basic Angle Boom

40 ft *(12.19m)* two—piece design that utilizes a 20 ft *(6.10m)* base section and a 20 ft *(6.10m)* top section with in—line connecting pins on 45.7 in *(1.16m)* wide and 45.7 in *(1.16m)* deep centers.

- Boom foot on 43.5 in *(1.10m)* centers
- 4 in x 4 in x 0.38 in *(10.16cm x 10.16cm x 0.97cm)* angle chords
- Lugs on base section to attach carrying links
- Deflector roller on top section
- Permanent skid pads mounted on top section to protect head machinery
- Rigid sheave guards
- Four, 18 in *(0.46m)* root diameter steel sheaves mounted on sealed anti—friction bearings
- Mechanical boom angle indicator

Optional

Three sheave head machinery for clam applications

Angle Boom Extensions

The following table provides the lengths available and the suggested quantity to obtain maximum boom in 10 ft *(3.05m)* increments. Midpoint pendant connections are not required.

Angle Boom Extensions		Quantity For Max Boom
ft	*m*	
10	*3.05*	1
20	*6.10*	2
30	*9.14*	2

- Deflector roller on top of each section
- Appropriate length pendants
- Maximum tip height of 154 ft *(46.94m)*.

Tube Jib
30—60 ft *(9.14—18.29m)*

Basic Tube Jib

30 ft *(9.14m)* two—piece design that utilizes a 15 ft *(4.57m)* base section and a 15 ft *(4.57m)* top section with in—line connecting pins on 32 in *(0.81m)* wide and 24 in *(0.61m)* deep centers.

- 2 in *(50.8mm)* diameter chords
- One 18.50 in *(0.47m)* root diameter steel sheave mounted on sealed anti—friction bearings
- 15 ft *(4.57m)* jib extensions provide jib lengths of 45 ft *(13.72m)* and 60 ft *(18.29m)*.
- Jib offset angles at 5°, 15°, and 25°
- The maximum tip height of boom + jib is 242 ft *(73.76m)* using the tube boom and 204' *(62.18m)* using the angle boom.

Auxiliary Tip Extension

Designed for use with tube boom up to 190 ft *(57.91m)* to use in place of jib to provide clearance between working hoist lines. The extension is equipped with a single 18 in *(0.45m)* root diameter nylon sheave mounted on sealed anti—friction bearings. Maximum capacity is 9 Ton *(8.16mt)*.

https://truckmanualshub.com/

Dimensions

General Dimensions	English	*Metric*
Basic Boom	40 ft	*12.19m*
Minimum Load Radius	10 ft 2.75 in	*3.19m*
Maximum Boom Angle	80°	*80°*
Track Shoe Width	36 in	*0.91m*

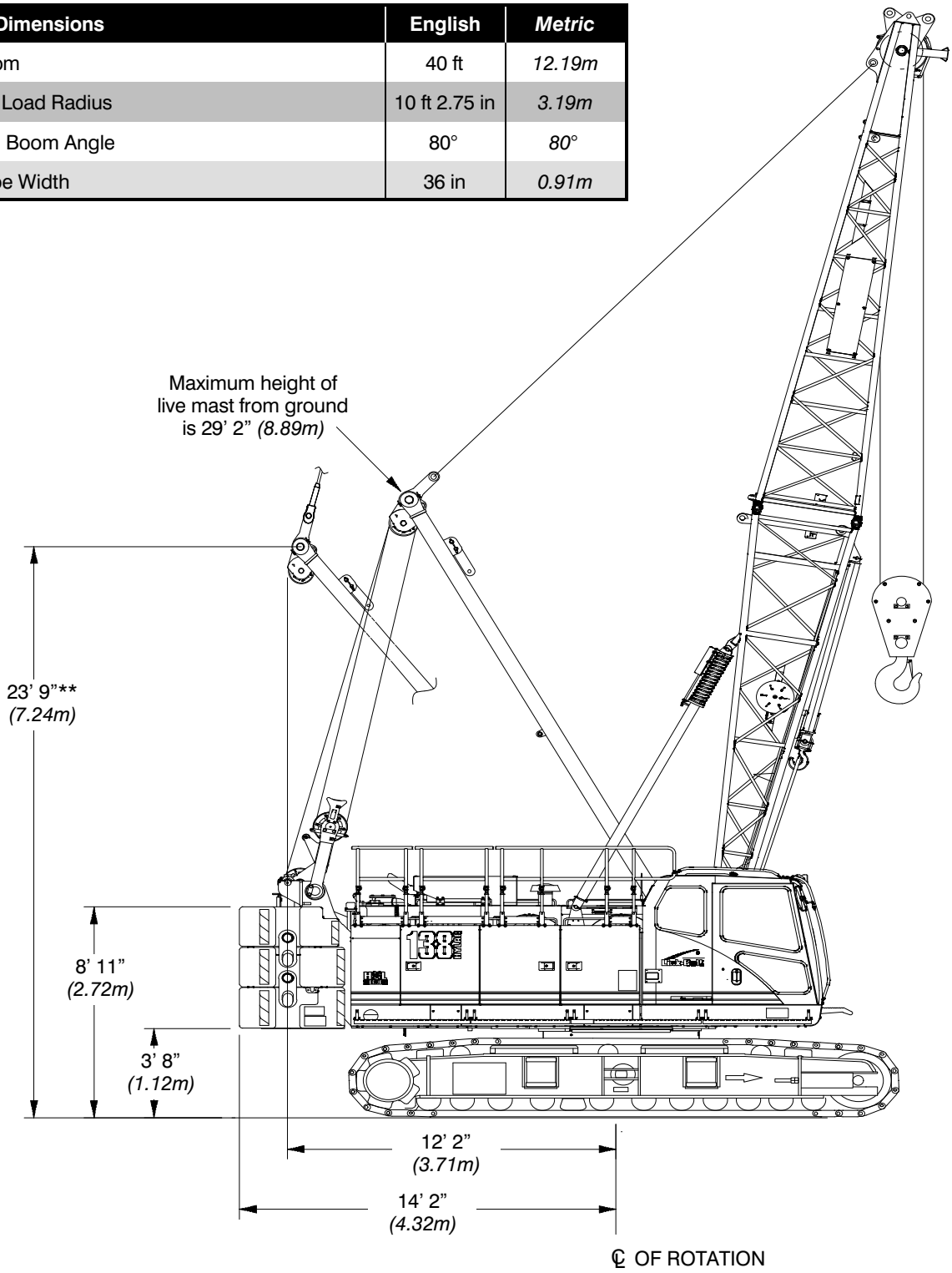

Note: **@ Maximum boom angle (80°) with maximum boom [200 ft *(60.96m)*], maximum rotation radius occurs.

https://truckmanualshub.com/

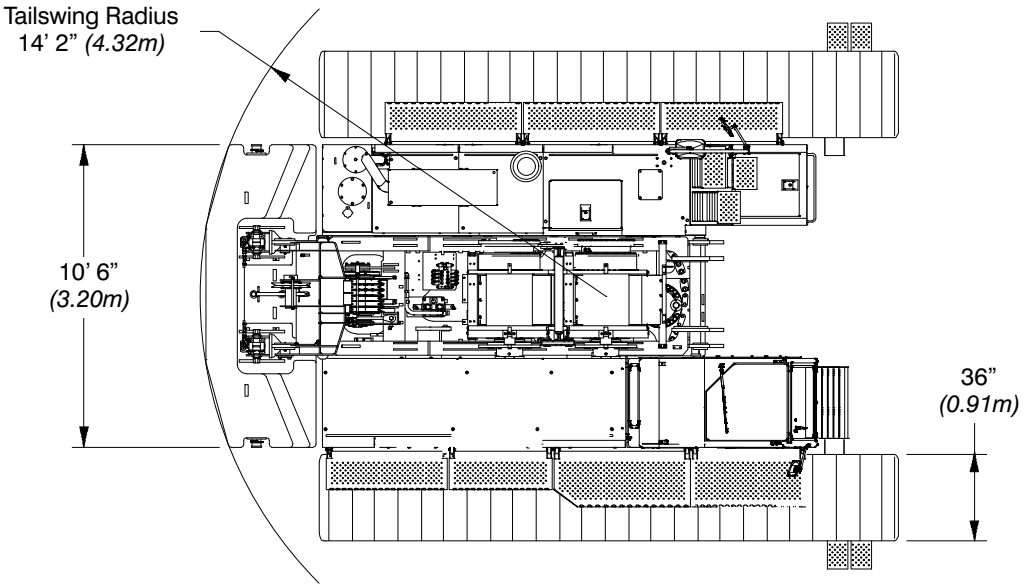

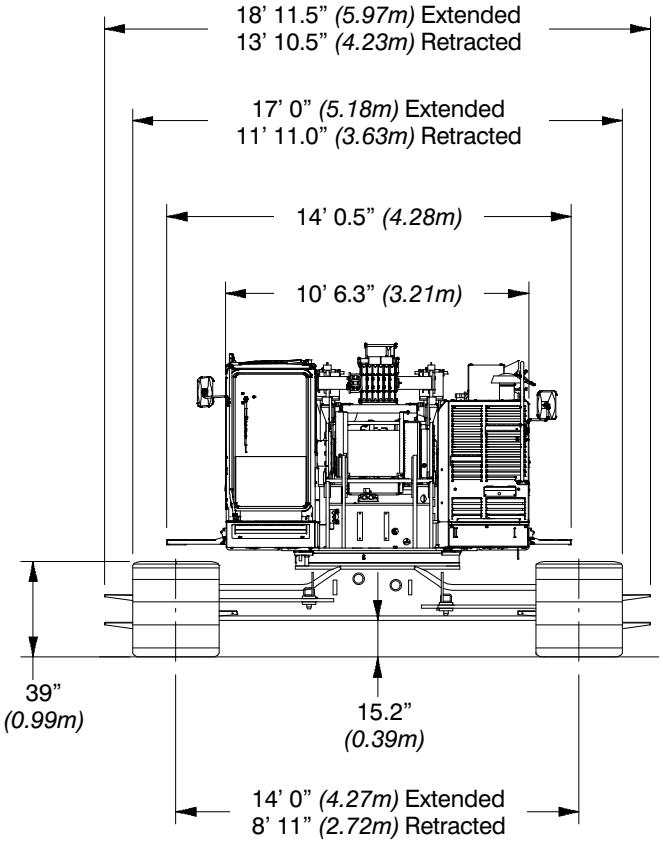

https://truckmanualshub.com/

Base Crane

Base Crane ❶

Length 1	20 ft 2 in	*(6.15m)*
Length 2	37 ft 6 in	*(11.43m)*
Length 3	2 ft 6 in	*(0.76m)*
Height	11 ft 0 in	*(3.35m)*
Weight:		
Tube Boom	89,923 lb	*(39 971kg)*
Angle Boom	90,674 lb	*(40 291kg)*

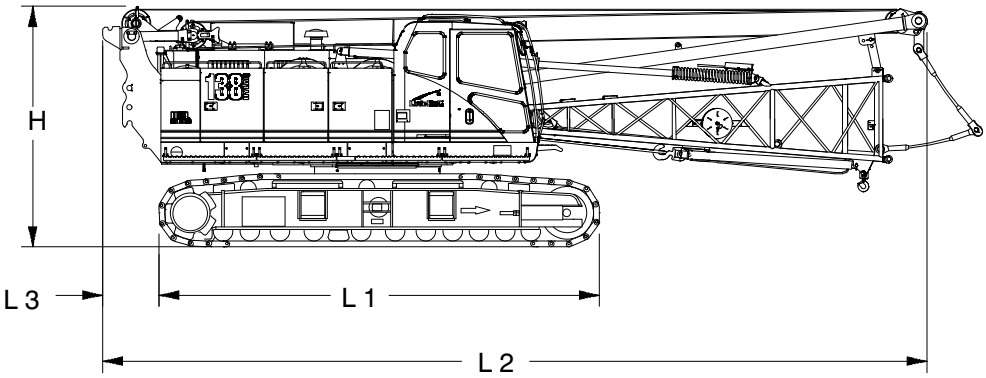

Side Frames

Side Frames ❷

Length	20 ft 2 in	*(6.15m)*
Width	36 in	*(0.91m)*
Height	39 in	*(0.99m)*
Weight	19,700 lb	*(8 936kg)*

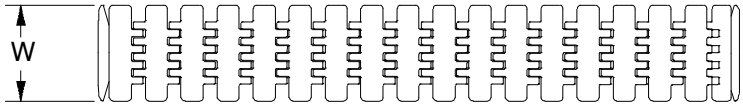

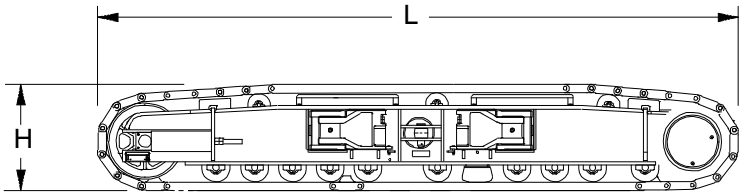

Number inside black circle "❶" = # of components

https://truckmanualshub.com/

Upper Counterweights

"A" Slab Counterweight ❶

Length	46 in	*(1.17m)*
Width	10 ft 6 in	*(3.20m)*
Height	6 ft 6.25 in	*(1.99m)*
Weight	23,305 lb	*(10 571kg)*

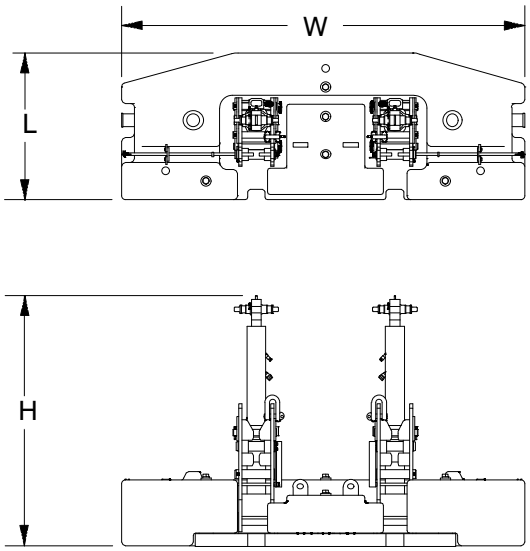

"B" Slab Counterweight ❶

Length	46 in	*(1.17m)*
Width	10 ft 6 in	*(3.20m)*
Height	23 in	*(0.58m)*
Weight	16,944 lb	*(7 686kg)*

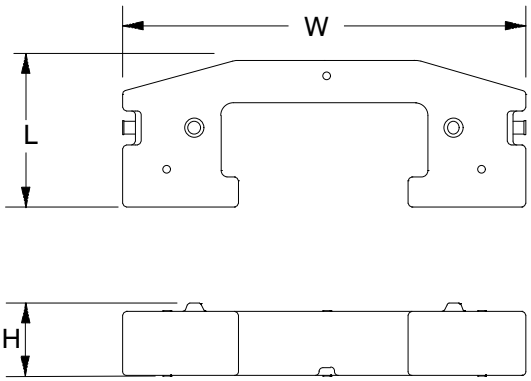

"C" Slab Counterweight❶

Length	43.50 in	*(1.10m)*
Width	10 ft 6 in	*(3.20m)*
Height	25.50 in	*(0.65m)*
Weight	12,071 lb	*(5 475kg)*

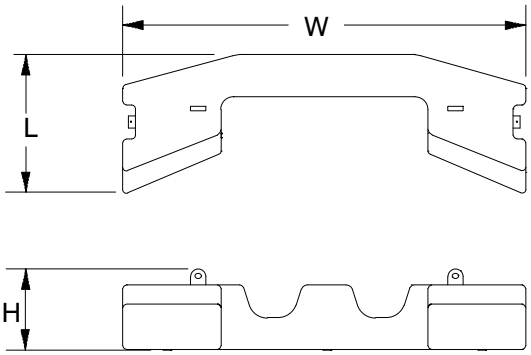

Number inside black circle "❶" = # of components

https://truckmanualshub.com/

Boom

54 in *(1.37m)* x 44 in *(1.12m)*
Tube Boom Extensions

10 ft *(3.05m)* Extension
Weight: 514 lb *(233kg)*

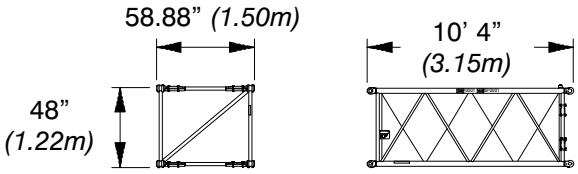

20 ft *(6.10m)* Extension
Weight: 856 lb *(388kg)*

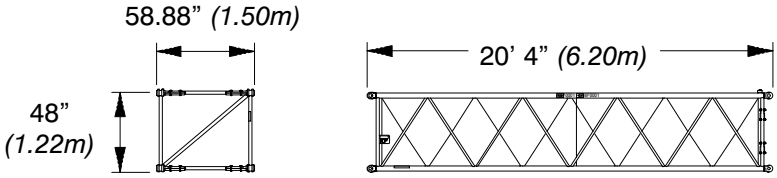

30 ft *(9.14m)* Extension
Weight: 1,212 lb *(550kg)*

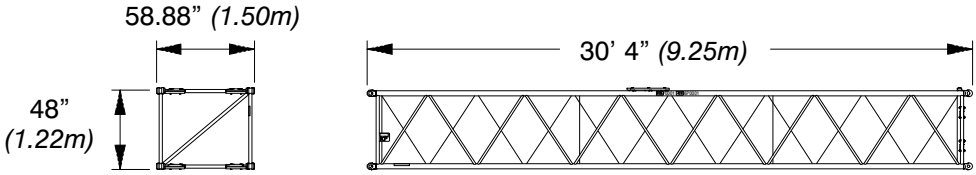

45.7 in *(1.16m)* x 45.7 in *(1.16m)*
Angle Boom Extensions

10 ft *(3.05m)* Extension
Weight: 847 lb *(384kg)*

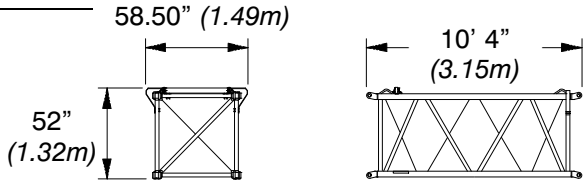

20 ft *(6.10m)* Extension
Weight: 1,424 lb *(646kg)*

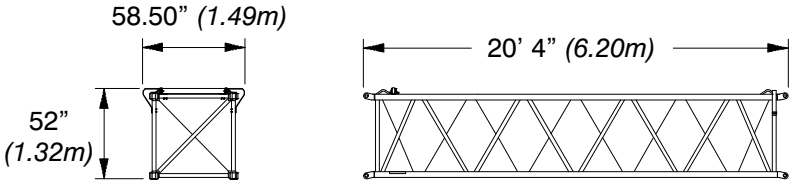

30 ft *(9.14m)* Extension
Weight: 2,067 lb *(938kg)*

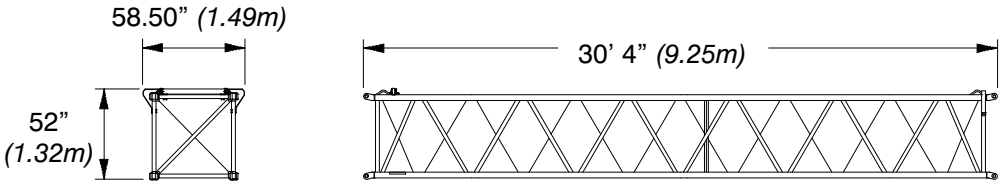

https://truckmanualshub.com/

20 ft *(6.10m)* Tube Boom Top Section ❶

Length	21 ft 11 in	*(6.68m)*
Width	57.13 in	*(1.45m)*
Deep	44 in	*(1.12m)*
Height	51 in	*(1.30m)*
Weight	2,350 lb	*(1 066kg)*

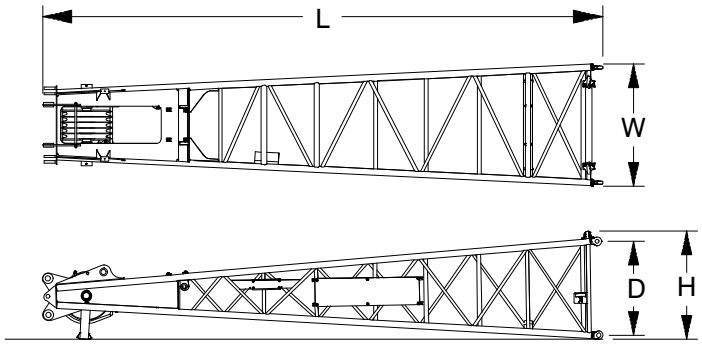

20 ft *(6.10m)* Angle Boom Top Section ❶

Length	22 ft 5 in	*(6.83m)*
Width	49.06 in	*(1.25m)*
Deep	45.7 in	*(1.16m)*
Height	50 in	*(1.27m)*
Weight	2,930 lb	*(1 329kg)*

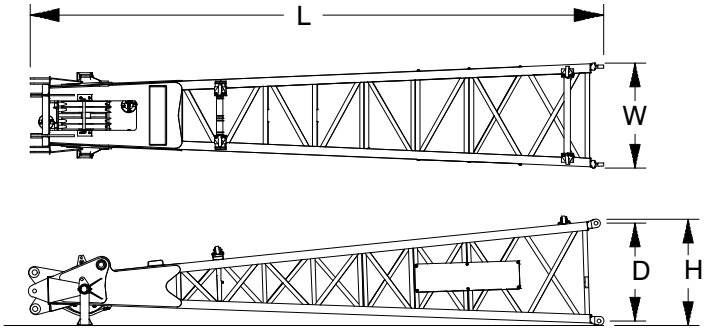

20 ft *(6.10m)* Tube Boom Base Section ❶

Length	20 ft 6 in	*(6.25m)*
Width	58.87 in	*(1.50m)*
Deep	44 in	*(1.12m)*
Height	61 in	*(1.55m)*
Weight		
w/o Self Assembly	1,780 lb	*(807kg)*
w/ Self Assembly	2,210 lb	*(1 002kg)*

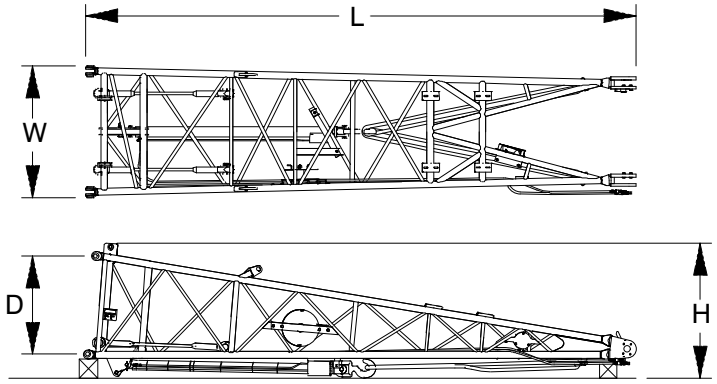

20 ft *(6.10m)* Angle Boom Base Section ❶

Length	20 ft 6 in	*(6.25m)*
Width	50.60 in	*(1.29m)*
Deep	45.7 in	*(1.16m)*
Height	61 in	*(1.55m)*
Weight		
w/o Self Assembly	2,531 lb	*(1 148kg)*
w/ Self Assembly	2,961 lb	*(1 343kg)*

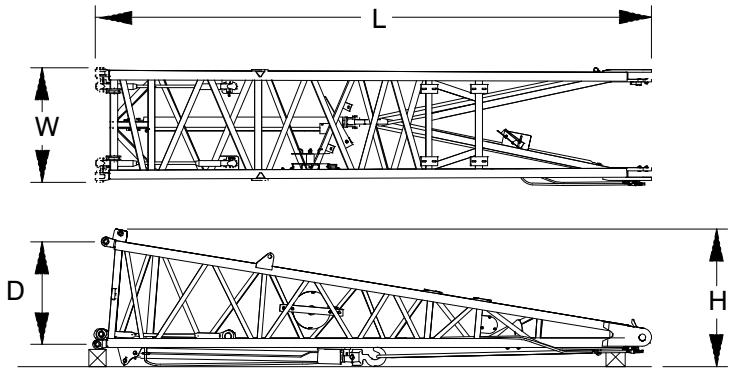

Number inside black circle "❶" = # of components
* — Optional equipment

https://truckmanualshub.com/

Auxiliary Tip Extension* ❶

Length	70.35 in	*(1.79m)*
Width	24.50 in	*(0.62m)*
Height	42.91 in	*(1.09m)*
Weight	720 lb	*(327kg)*

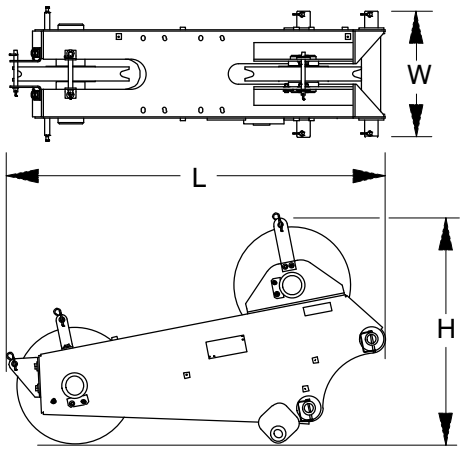

Jib

15 ft *(4.57m)* Jib Top Section* ❶

Length	16 ft 1.50 in	*(4.91m)*
Width	34.50 in	*(0.88m)*
Height	26.50 in	*(0.67m)*
Weight†	544 lb	*(247kg)*

† Weight includes pendants and hardware.

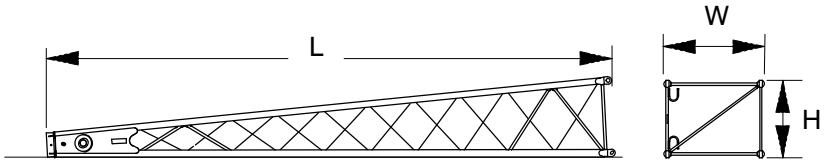

15 ft *(4.57m)* Jib Base Section* ❶

Length	15 ft 3.50 in	*(4.66m)*
Width	34.50 in	*(0.88m)*
Height 1	26.50 in	*(0.67m)*
Height 2	54.50 in	*(1.38m)*
Weight†	936 lb	*(425kg)*

† Weight includes pins, basic frontstay & backstay pendants, and hardware.

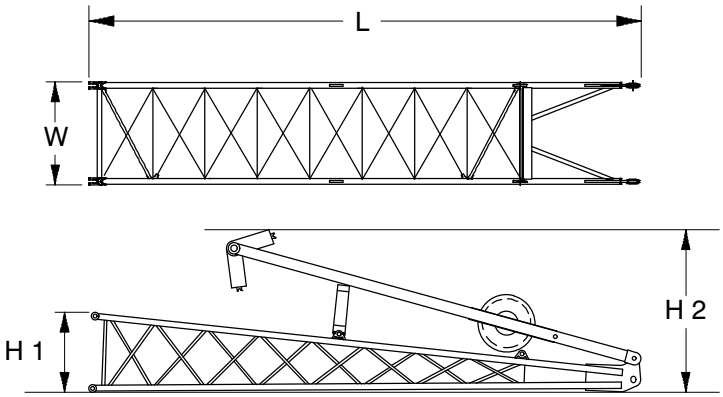

15 ft *(4.57m)* Jib Extension* ❶

Length	15 ft 2.50 in	*(4.64m)*
Width	34.50 in	*(0.88m)*
Height	26.50 in	*(0.67m)*
Weight†	330 lb	*(150kg)*

† Weights includes pins, pendants, and hardware.

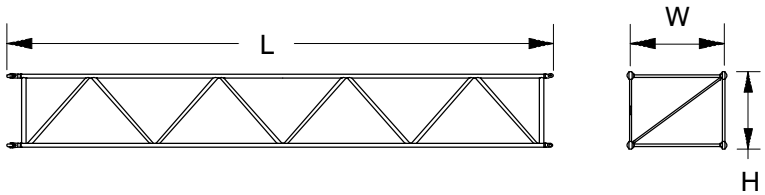

Number inside black circle "❶" = # of components
* – Optional equipment

https://truckmanualshub.com/

Hook Balls

15 Ton *(13.6mt)* Swivel Hook Ball* ❶

Width	17.50 in	*(0.44m)*
Height	40.50 in	*(1.03m)*
Weight	767 lb	*(348kg)*

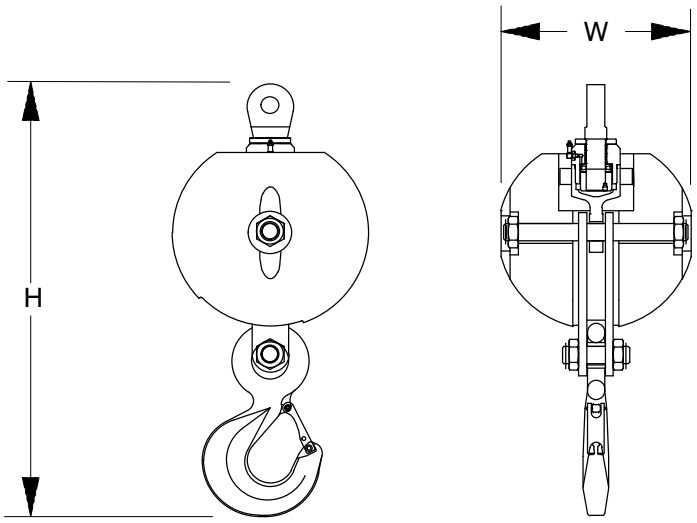

15 Ton *(13.6mt)* Non—Swivel Hook Ball* ❶

Width	18 in	*(0.46m)*
Height	39.50 in	*(1.00m)*
Weight	748 lb	*(339kg)*

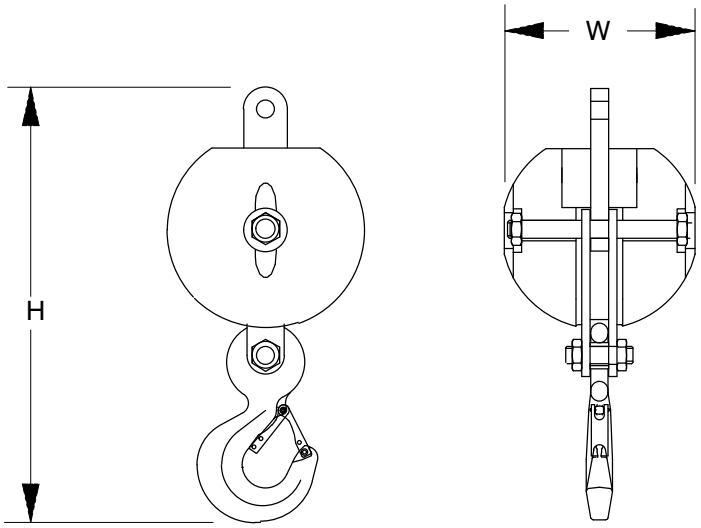

Number inside black circle "❶" = # of components
* — Optional equipment

https://truckmanualshub.com/

Hook Blocks

50 Ton *(45.4mt)*

4—Sheave Hook Block* ❶

Width1	22.75 in	*(0.58m)*
Width2	20.25 in	*(0.51m)*
Width3	18.75 in	*(0.48m)*
Height	54.00 in	*(1.37m)*
Weight	1,221 lb	*(554kg)*

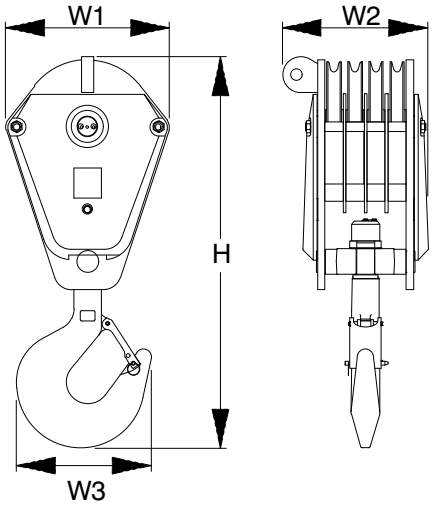

80 Ton *(72.6mt)*

4—Sheave Hook Block* ❶

Width1	24.75 in	*(0.63m)*
Width2	18.25 in	*(0.46m)*
Width3	20.25 in	*(0.51m)*
Height	60.00 in	*(1.52m)*
Weight	1,221 lb	*(554kg)*

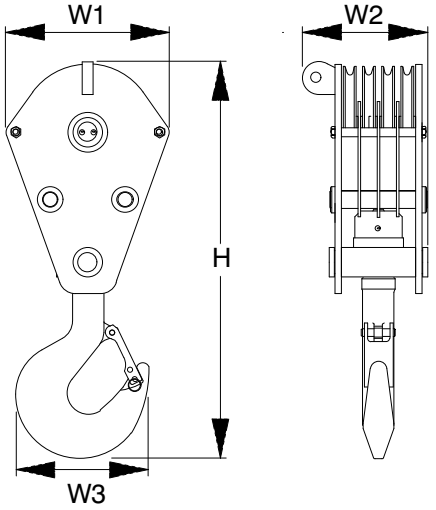

Number inside black circle "❶" = # of components
* — Optional equipment

Working Weights

Based on basic crane including **Isuzu AH—6HK1X** diesel engine, turntable bearing, live mast, 14 part boom hoist reeving, backstops, crawler lower with 36 in *(0.91m)* wide track shoes, sealed track rollers, and catwalks, plus the following:		Ctwt "A"	Ctwt "AB"	Ctwt "ABC"
		lb (*kg*)	lb (*kg*)	lb (*kg*)
Lifting crane — includes 40 ft *(12.19m)* basic tube boom, self assembly cylinder, 700 ft *(213.36m)* of 16mm type "DB" front hoist rope, 700 ft *(213.36m)* of 16mm type "DB" rear hoist rope, 80 Ton *(72.6mt)* hook block, and basic pendants.		116,388 *(52 793)*	133,332 *(60 478)*	145,403 *(65 954)*
Ground Bearing Pressure	psi	7.41	8.49	9.26
	kg/cm²	*0.52*	*0.60*	*0.65*

https://truckmanualshub.com/

Transport Weights

Base Crane: Telescoping Boom Backstops, 27 gal *(102.2L)* Of Fuel, Side Frames, Catwalks, Handrails, 20' *(6.10m)* Tube Base Section, 22' *(6.71m)* Live Mast with Bridle, 14—Part Boom Hoist Reeving, 700' *(213.36m)* Type "DB" Front Hoist Rope, and 700' *(213.36m)* Type "DB" Rear Hoist Rope.

Item Description	Gross Weight		Transport Loads		
	lb	*kg*	#1	#2	#3
Base Crane	89,923	*40 788*	1		
Add "A" Counterweight	23,305	*10 571*			1
Add "B" Counterweight	16,944	*7 685*		1	
Add "C" Counterweight	12,071	*5 475*		1	
Add Hydraulic Third Drum Without Rope	1,345	*610*			
Add 20' (*6.10m*) Tube Top Section	2,350	*1 066*		1	
Add 10' *(3.05m)* Tube Extension With Pins And Pendants	692	*314*			1
Add 20' *(6.10m)* Tube Extension With Pins And Pendants	1,093	*496*		1	2
Add 30' *(9.14m)* Tube Extension With Pins and Pendants	1,490	*676*		2	1
Add 20' (*6.10m*) Angle Base Section	2,531	*1 148*			
Add 20' (*6.10m*) Angle Top Section With 4 Lifting Sheaves	2,930	*1 329*			
Add 20' (*6.10m*) Angle Top Section With 3 Lifting Sheaves	2,830	*1 284*			
Add 20' (*6.10m*) Angle Top Section With 2 Lifting Sheaves	2,730	*1 238*			
Add 10' *(3.05m)* Angle Extension With Pins And Pendants	1,025	*465*			
Add 20' *(6.10m)* Angle Extension With Pins And Pendants	1,660	*753*			
Add 30' *(9.14m)* Angle Extension With Pins and Pendants	2,345	*1 069*			
Add Tagline Winder	760	*345*			
Add 30' *(9.14m)* Tube Jib	1,480	*671*			1
Add 15' *(4.57m)* Tube Jib Extension	330	*150*			2
Add 5' *(1.52m)* Auxiliary Tip Extension	720	*327*			
Add Holding Rope — 7/8 in X 165' *(50.29m)* Type "DB"	234	*106*			
Add Closing Rope — 7/8 in X 220' *(67.06m)* Type "DB"	312	*142*			
Add Inhaul Rope — 7/8 in X 105' *(32.00m)* Type "M"	141	*64*			
Add Hoist Rope — 7/8 in X 210' *(64.01m)* Type "LB"	298	*135*			
Add Jib Wire Rope — 7/8 in X 700' *(213.36m)* Type "RB"	1,050	*476*			
Add 3rd Drum Wire Rope — 16mm X 385' *(117.35m)* Type "ZB"	312	*142*			
Add 3rd Drum Wire Rope — 16mm X 385' *(117.35m)* Type "WB"	296	*134*			
Add 15—ton *(13.6mt)* Hook Ball — Non Swivel	748	*339*		1	
Add 15—ton *(13.6mt)* Hook Ball — Swivel	767	*348*			
Add 50—ton *(45.3mt)* 4 Sheave Hook Block	1,221	*554*			
Add 80—ton *(72.6mt)* 4 Sheave Hook Block	1,221	*554*		1	
Add Quick Draw	430	*195*			
Remove 20' *(6.10m)* Tube Base Section	1,780	*807*			
Remove Front Hoist Rope — 7/8 in X 700' *(213.36m)* Type "DB"	—994	*—451*			
Remove Rear Hoist Rope — 7/8 in X 700' *(213.36m)* Type "DB"	—994	*—451*			
Remove 22' *(6.71m)* Live Mast with Bridle	—2,212	*—1 003*			
Remove 27 gal (*102.2L*) Of Fuel	—185	*—84*			
Approximate Total Shipping Weight	***lb***		**89,923**	**37,443**	**29,813**
	kg		**40 788**	**16 984**	**13 523**

Notes:
Estimated weights vary by ± 2%. Numbers in the transport loads columns represent quantities.
Estimated transport loads assume the load out consist of 200' *(60.96m)* of tube boom and 60' *(18.29m)* of jib with full counterweight.
Support loads were targeted at 45,000 lb *(20 412kg)*, 8' 6" *(2.6m)* wide, 48' *(14.6m)* long, and 13' 6" (*4.1m*) high using a drop deck trailer. This may vary depending on state laws, empty truck/trailer weights, and style of trailer.

https://truckmanualshub.com/

Transport Drawings — Tube Boom

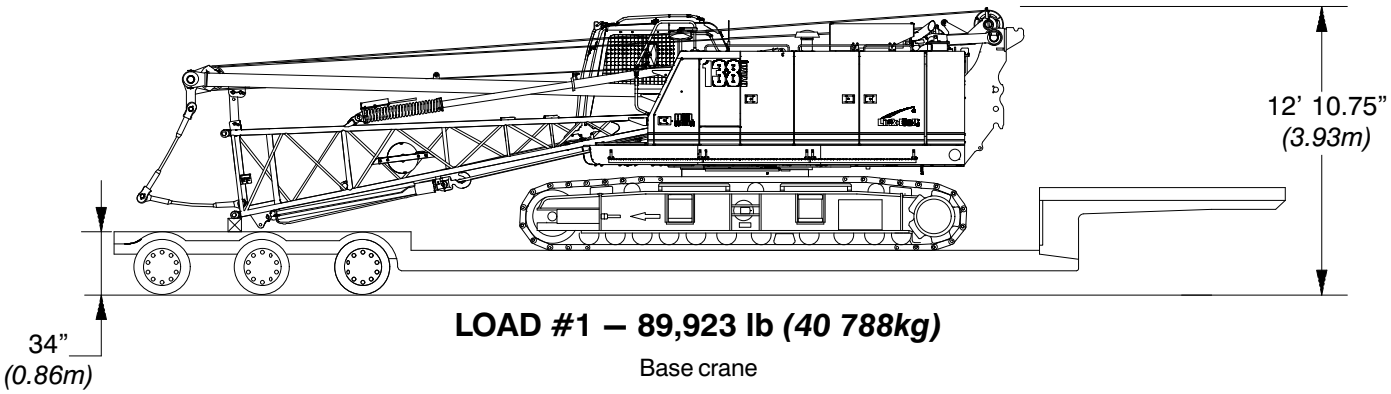

LOAD #1 — 89,923 lb *(40 788kg)*

Base crane

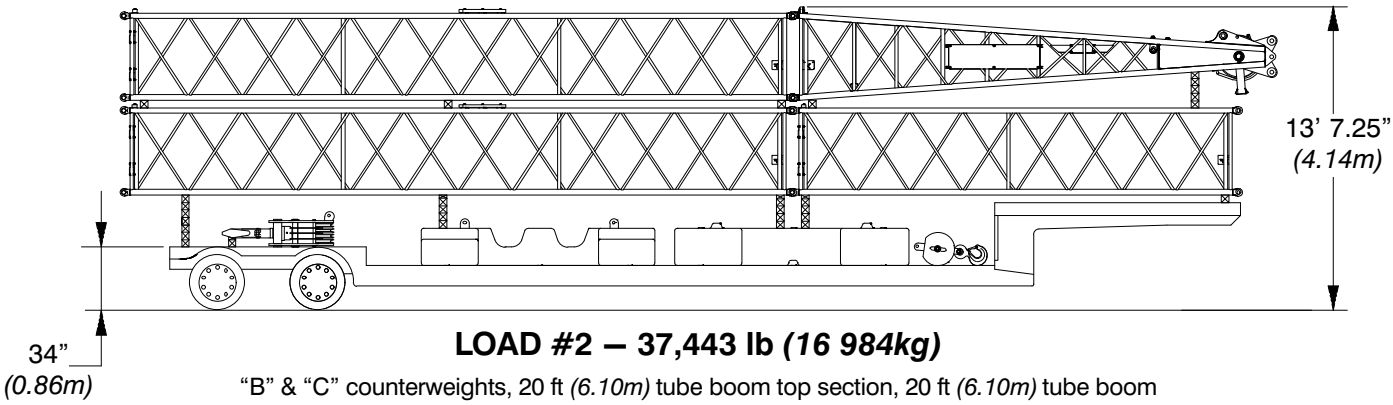

LOAD #2 — 37,443 lb *(16 984kg)*

“B” & “C” counterweights, 20 ft *(6.10m)* tube boom top section, 20 ft *(6.10m)* tube boom extension with pins and pendants, two 30 ft *(9.14m)* tube boom extensions with pins and pendants, 15 ton *(13.6mt)* non—swivel hook ball, and 80 ton *(72.6mt)* 4 sheave hook block.

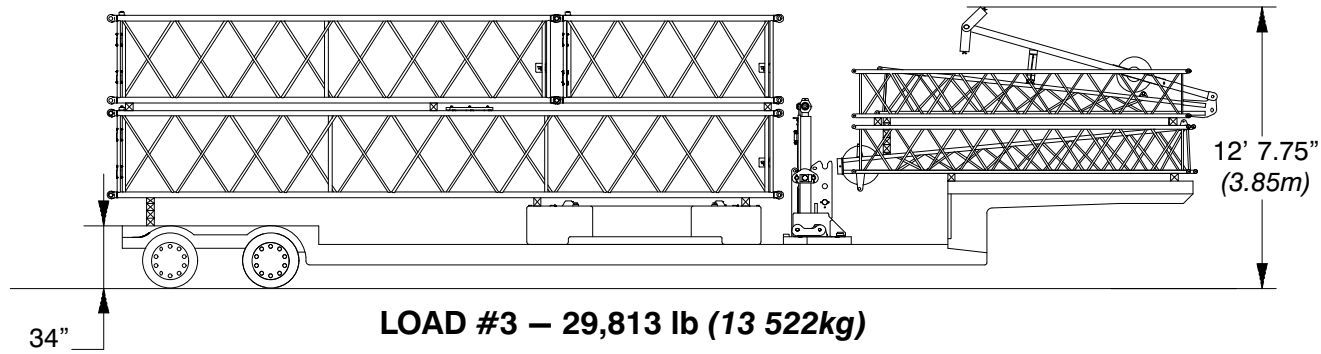

LOAD #3 — 29,813 lb *(13 522kg)*

“A” counterweight and cylinders, 10 ft *(3.05m)* tube boom extension with pins and pendants, 20 ft *(6.10m)* tube boom extension with pins and pendants, 30 ft *(9.14m)* tube boom extension with pins and pendants, 30 ft *(9.14m)* basic tube jib, and two 15 ft *(4.57m)* tube jib extensions.

https://truckmanualshub.com/

Load Hoist Performance

Front or Rear Drum – 7/8 in (*22.4mm*) Wire Rope

Rope Layer	Maximum Line Pull		No Load Line Speed		Full Load Line Speed		Pitch Diameter		Layer		Total	
	lb	*kg*	ft/min	*m/min*	ft/min	*m/min*	in	*mm*	ft	*m*	ft	*m*
1	31,182	*14 144*	328	*100*	63	*19*	20.1	*510*	115.6	*35.2*	115.6	*35.2*
2	29,019	*13 163*	353	*107*	68	*21*	21.8	*555*	124.3	*37.9*	239.9	*73.1*
3	27,138	*12 309*	377	*115*	73	*22*	23.6	*600*	132.9	*40.5*	372.9	*113.7*
4	25,485	*11 560*	401	*122*	77	*24*	25.4	*644*	141.6	*43.2*	514.5	*156.8*
5	24,022	*10 896*	426	*130*	82	*25*	27.1	*689*	150.2	*45.8*	664.7	*202.6*
6	22,718	*10 305*	450	*137*	87	*26*	28.9	*734*	158.9	*48.4*	823.6	*251.0*

Boom Hoist Drum – 5/8 in (*16mm*) Wire Rope

Rope Layer	Maximum Line Pull		No Load Line Speed		Full Load Line Speed		Pitch Diameter		Layer		Total	
	lb	*kg*	ft/min	*m/min*	ft/min	*m/min*	in	*mm*	ft	*m*	ft	*m*
1	23,754	*10 775*	209	*64*	40	*12*	18.3	*466*	62.3	*19.0*	62.3	*19.0*
2	22,453	*10 184*	221	*67*	43	*13*	19.6	*498*	65.9	*20.1*	128.3	*39.1*
3	21,246	*9 637*	234	*71*	45	*14*	20.9	*530*	69.9	*21.3*	198.2	*60.4*
4	20,199	*9 162*	246	*75*	47	*14*	22.1	*562*	73.5	*22.4*	271.7	*82.8*
5	19,251	*8 732*	258	*79*	50	*15*	23.4	*594*	77.1	*23.5*	348.8	*106.3*
6	18,387	*8 340*	270	*82*	52	*16*	24.6	*626*	80.7	*24.6*	429.5	*130.9*

Front Mounted Third Drum – 5/8 in (*16mm*) Wire Rope

Rope Layer	Maximum Line Pull		No Load Line Speed		Full Load Line Speed		Pitch Diameter		Layer		Total	
	lb	*kg*	ft/min	*m/min*	ft/min	*m/min*	in	*mm*	ft	*m*	ft	*m*
1	15,041	*6 823*	159	*48.6*	31	*9.4*	11.3	*286*	58	*17.6*	58	*17.6*
2	13,538	*6 141*	177	*54.0*	34	*10.4*	12.5	*318*	64	*19.6*	122	*37.2*
3	12,308	*5 583*	195	*59.4*	38	*11.5*	13.8	*349*	71	*21.5*	192	*58.7*
4	11,282	*5 118*	213	*64.8*	41	*12.5*	15.0	*381*	77	*23.5*	269	*82.1*
5	10,415	*4 724*	230	*70.2*	44	*13.6*	16.3	*413*	83	*25.4*	353	*107.5*
6	9,671	*4 387*	248	*75.6*	48	*14.6*	17.5	*445*	90	*27.4*	443	*134.9*

Rear Mounted Fourth Drum – 7/8 in (*22.4mm*) Wire Rope

Rope Layer	Maximum Line Pull		No Load Line Speed		Full Load Line Speed		Pitch Diameter		Layer		Total	
	lb	*kg*	ft/min	*m/min*	ft/min	*m/min*	in	*mm*	ft	*m*	ft	*m*
1	35,570	*16 134*	287	*87*	55	*17*	20.1	*510*	99.7	*30.4*	99.7	*30.4*
2	33,104	*15 016*	308	*94*	59	*18*	21.8	*555*	107.3	*32.7*	207.0	*63.1*
3	30,957	*14 042*	330	*100*	64	*19*	23.6	*600*	114.8	*35.0*	321.9	*98.1*
4	29,072	*13 187*	351	*107*	68	*21*	25.4	*644*	122.4	*37.3*	444.2	*135.4*
5	27,403	*12 430*	372	*114*	72	*22*	27.1	*689*	129.6	*39.5*	573.8	*174.9*

Wire Rope Application	Diameter		Type	Max. Permissible Load		Wire Rope Descriptions
	in	*mm*		lb	*kg*	
Boom Hoist	––	*16*	LB	11,770	*5 339*	6 Strand, Compacted Strand, Seale or Warrington Seale, I.W.R.C., Preformed, Right Lay, Regular Lay
Front Drum	7/8	––	DB	22,740	*10 315*	6 X 26 (6 X 19 Class), Warrington Seale, E.I.P.S., Preformed, Right Regular Lay, I.W.R.C.
Rear Drum (Optional)	7/8	––	RB	17,520	*7 947*	18 X 19 Rotation Resistant Compacted Strand — High Strength — Preformed, Right Regular Lay
Rear Drum (Optional)	7/8	––	DB	22,740	*10 315*	6 X 26 (6 X 19 Class), Warrington Seale, E.I.P.S., Preformed, Right Regular Lay, I.W.R.C.
Third Drum (Optional)	5/8	––	ZB	11,080	*5 026*	34 X 7 Non—Rotating, E.I.P.S., Right Regular or Left Lang Lay
Third Drum (Optional)	5/8	––	WB	13,650	*6 192*	8 Strand, Preformed, Regular Lay
Fourth Drum (Optional)	7/8	––	DB	15,920	*7 221*	18 X 19 Rotation Resistant Compacted Strand — High Strength — Preformed, Right Regular Lay

https://truckmanualshub.com/

Working Areas

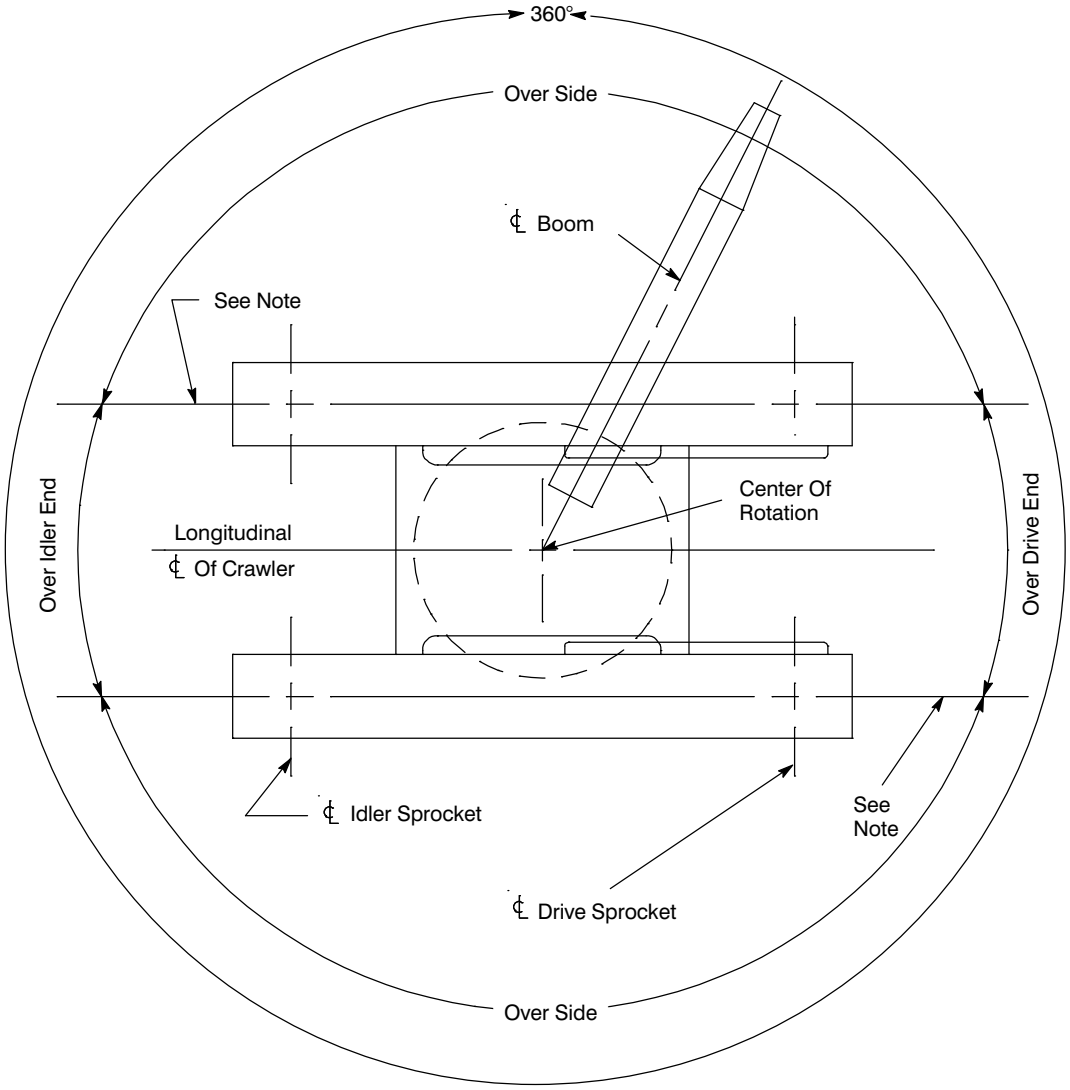

Note: These Lines Determine The Limiting Position Of Any Load For Operation Within Working Areas Indicated.

https://truckmanualshub.com/

Attachments

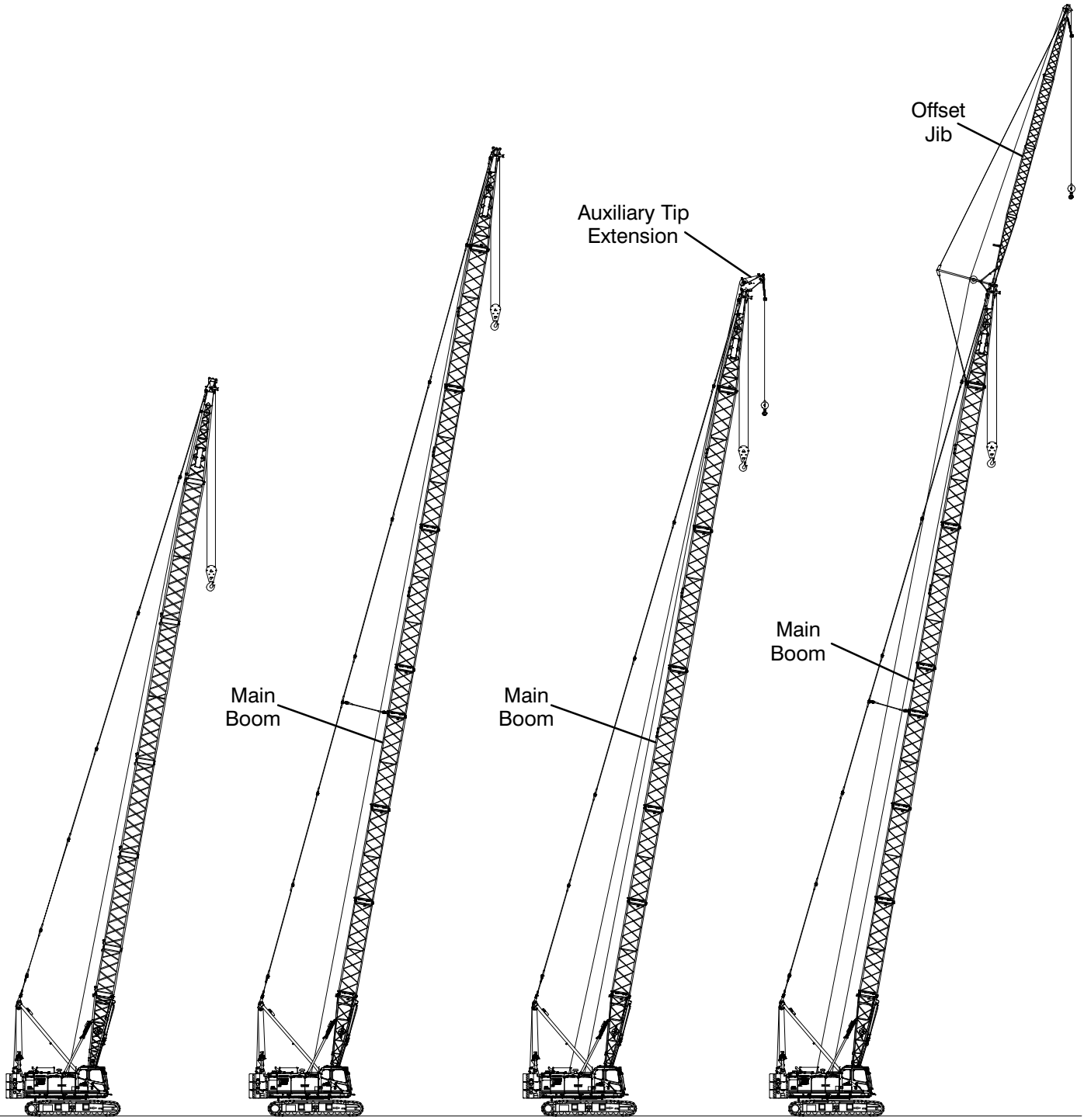

40—150 ft (*12.19—45.72m*) Main Angle Boom

40—200 ft (*12.19—60.96m*) Main Tube Boom

40—190 ft (*12.19—57.91m*) Main Tube Boom With Tip Extension

40—180 ft (*12.19—54.86m*) Main Tube Boom With 30—60 ft (*9.14—18.29m*) Offset Jib

https://truckmanualshub.com/

Tube Boom Make—up

Boom Length ft *(m)*	Tube Boom Extensions ft *(m)*		
	10 *(3.05)*	20 *(6.10)*	30 *(9.14)*
40 *(12.19)*			
50 *(15.24)*	1		
60 *(18.29)*		1	
70 *(21.34)*			1
80 *(24.38)*	1		1
90 *(27.43)*		1	1
100 *(30.48)*			2
110 *(33.53)*	1		2
120 *(36.58)*		1	2
130 *(39.62)*			3
140 *(42.67)*	1		3
150 *(45.72)*		1	3
160 *(48.77)*	1	1	3
170 *(51.82)*		2	3
180 *(54.86)*	1	2	3
190 *(57.91)*		3	3
200 *(60.96)*	1	3	3

Optional Auxiliary Tip Extension

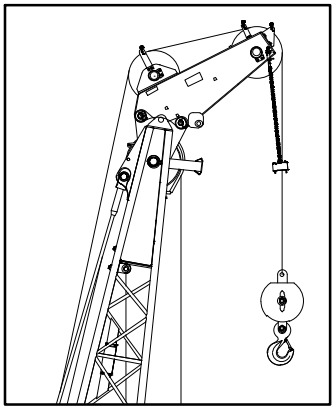

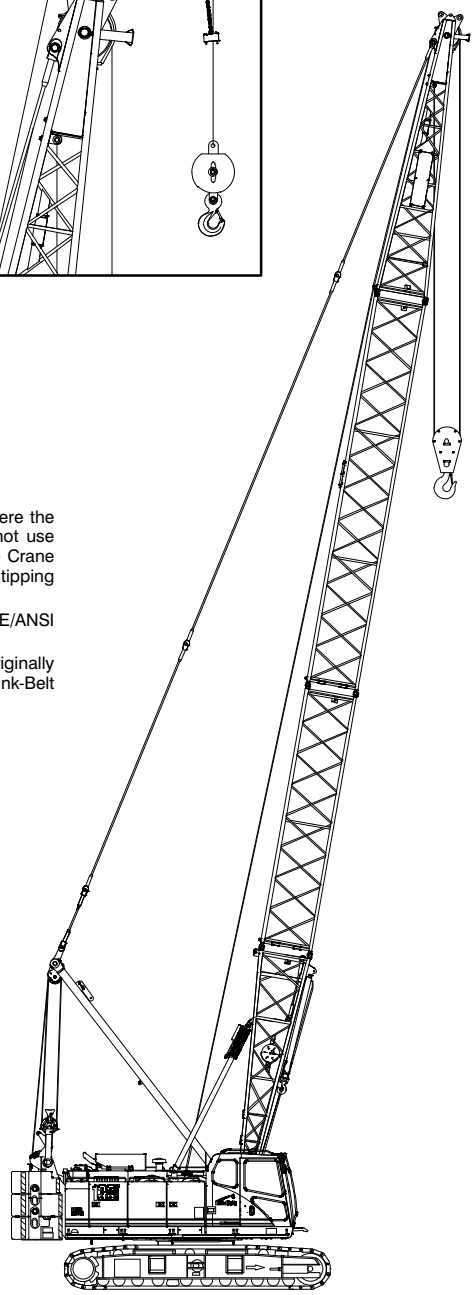

Notes:

1. Capacities shown are in kips/metric tons (1 kip = 1,000 lb / 1 metric ton = 0.45 kips) and are not more than 75% of the tipping loads with the crane standing level on firm supporting surface. A deduction must be made from these capacities for weight of hook block, hook ball, sling, grapple, load weighing device, etc. When using main hook while jib or tip extension is attached, reduce capacities by values shown in Crane Rating Manual. See Operator's Manual for all limitations when raising or lowering attachment.
2. The capacities in the shaded areas are based on structural strength. The capacities in the non—shaded areas are based on stability ratings.
3. For recommended reeving, parts of line, wire rope type, and wire rope inspection, see Wire Rope Capacity Chart, Operator's Manual, and Parts Manual.
4. Load ratings are based on freely suspended loads and make no allowances for such factors as the effect of the wind, ground conditions, and operating speeds. The operator shall therefore reduce load ratings in order to take these conditions into account. Refer to the Crane Rating Manual for Wind Speed Restrictions.
5. The 22 ft (*6.71m*) live mast must be used for all capacities listed.
6. The least stable rated condition is over the side.
7. Booms must be erected and lowered over the end for maximum stability.
8. Main boom length must not exceed 200 ft (*60.96m*).
9. Do not operate at radii and boom lengths where the Crane Rating Manual lists no capacity. Do not use longer booms or jibs than those listed in the Crane Rating Manual. Any of the above can cause a tipping condition, or boom and jib failure.
10. These capacities are in compliance with ASME/ANSI B30.5 at date of manufacture.
11. These capacities apply only to the crane as originally manufactured and normally equipped by Link-Belt Construction Equipment Company.

https://truckmanualshub.com/

Tube Boom Working Range Diagram

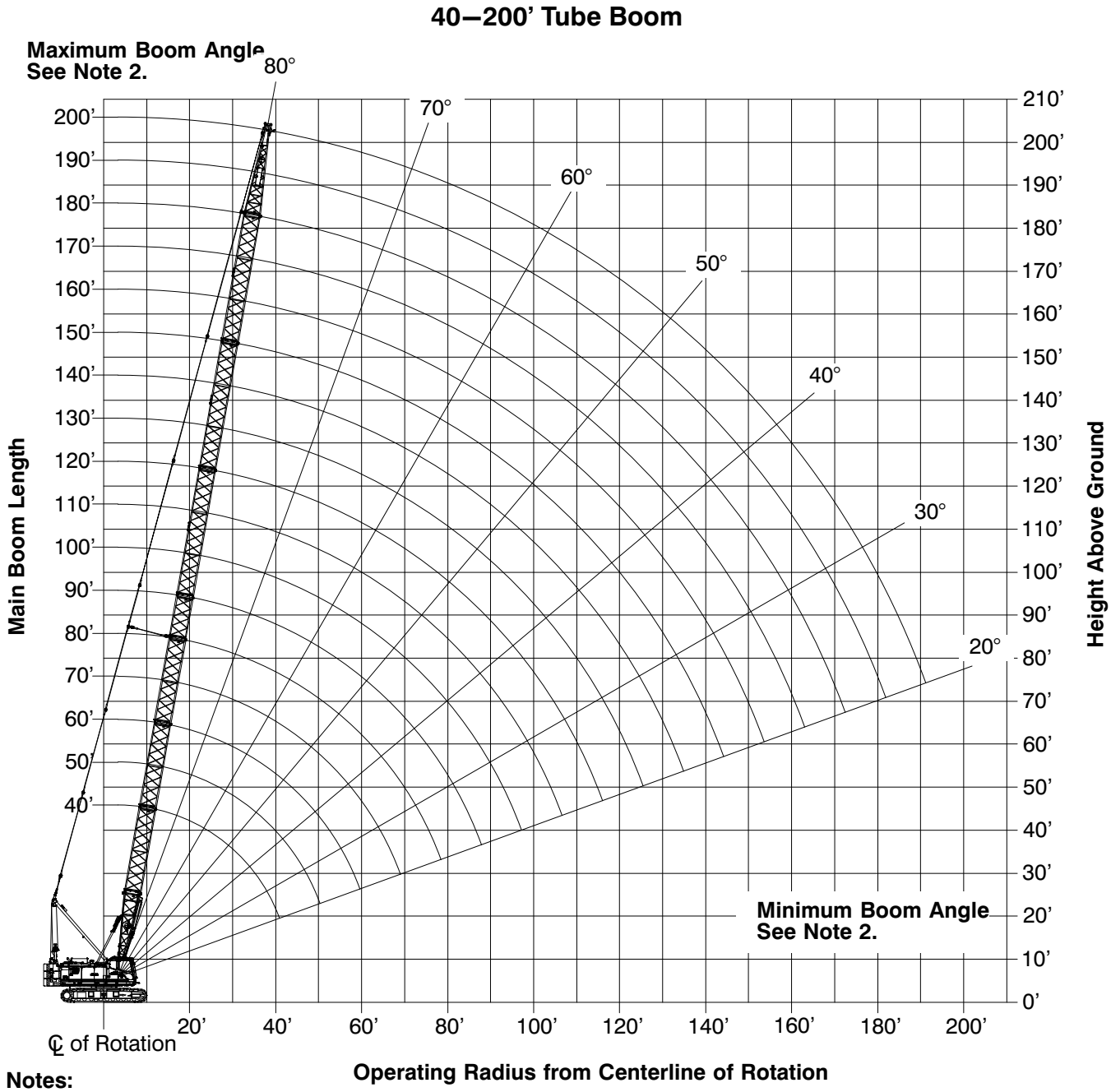

Notes:

1. **Boom geometry shown is for unloaded condition and crane standing level on firm supporting surface. Boom deflection, subsequent radius, and boom angle change must be accounted for when applying load to hook.**
2. **Maximum and minimum boom angles are equal to the values listed in the capacity chart for each boom length.**

https://truckmanualshub.com/

Tube Boom Load Chart

Tube Boom Lift Capacity Chart − 360° Rotation
ABC = 52,320 lb (*23 732kg*) Counterweight − Side Frames Extended
[All capacities are listed in kips (*mt*)]

Load Radius ft *(m)*	Boom Length − ft *(m)*									
	40 *(12.2)*	50 *(15.2)*	60 *(18.3)*	70 *(21.3)*	80 *(24.4)*	90 *(27.4)*	100 *(30.5)*	110 *(33.5)*	120 *(36.6)*	130 *(39.6)*
11 *(3.4)*	160.0 *(72.6)*									
12 *(3.7)*	160.0 *(72.6)*	160.0 *(72.6)*								
13 *(4.0)*	151.8 *(68.9)*	151.6 *(68.8)*								
14 *(4.3)*	141.6 *(64.2)*	141.4 *(64.1)*	141.1 *(64.0)*							
15 *(4.6)*	132.6 *(60.1)*	132.4 *(60.1)*	132.2 *(60.0)*							
16 *(4.9)*	124.7 *(56.6)*	124.5 *(56.5)*	124.3 *(56.4)*	123.9 *(56.2)*						
17 *(5.2)*	117.6 *(53.3)*	117.5 *(53.3)*	117.3 *(53.2)*	117.0 *(53.1)*						
18 *(5.5)*	111.1 *(50.4)*	111.2 *(50.4)*	111.0 *(50.3)*	110.7 *(50.2)*	109.0 *(49.4)*					
19 *(5.8)*	101.7 *(46.1)*	101.9 *(46.2)*	102.0 *(46.3)*	102.1 *(46.3)*	102.1 *(46.3)*	99.3 *(45.0)*				
20 *(6.1)*	93.7 *(42.5)*	93.9 *(42.6)*	94.0 *(42.6)*	94.1 *(42.7)*	94.1 *(42.7)*	94.0 *(42.6)*				
25 *(7.6)*	67.0 *(30.4)*	67.1 *(30.4)*	67.2 *(30.5)*	67.2 *(30.5)*	67.1 *(30.4)*	67.1 *(30.4)*	67.0 *(30.4)*	66.9 *(30.3)*	66.8 *(30.3)*	
30 *(9.1)*	51.8 *(23.5)*	51.9 *(23.5)*	52.0 *(23.6)*	52.0 *(23.6)*	51.9 *(23.5)*	51.8 *(23.5)*	51.7 *(23.5)*	51.6 *(23.4)*	51.5 *(23.4)*	51.4 *(23.3)*
35 *(10.7)*	42.0 *(19.1)*	42.2 *(19.1)*	42.2 *(19.1)*	42.1 *(19.1)*	42.1 *(19.1)*	42.0 *(19.1)*	41.9 *(19.0)*	41.8 *(19.0)*	41.6 *(18.9)*	41.5 *(18.8)*
40 *(12.2)*	35.1 *(15.9)*	35.3 *(16.0)*	35.3 *(16.0)*	35.3 *(16.0)*	35.2 *(16.0)*	35.1 *(15.9)*	35.0 *(15.9)*	34.9 *(15.8)*	34.7 *(15.7)*	34.6 *(15.7)*
50 *(15.2)*		26.3 *(11.9)*	26.4 *(12.0)*	26.4 *(12.0)*	26.3 *(11.9)*	26.2 *(11.9)*	26.0 *(11.8)*	25.9 *(11.7)*	25.8 *(11.7)*	25.6 *(11.6)*
60 *(18.3)*				20.8 *(9.4)*	20.7 *(9.4)*	20.6 *(9.3)*	20.4 *(9.3)*	20.3 *(9.2)*	20.2 *(9.2)*	20.0 *(9.1)*
70 *(21.3)*					16.9 *(7.7)*	16.7 *(7.6)*	16.6 *(7.5)*	16.5 *(7.5)*	16.3 *(7.4)*	16.2 *(7.3)*
80 *(24.4)*						14.0 *(6.4)*	13.8 *(6.3)*	13.7 *(6.2)*	13.5 *(6.1)*	13.4 *(6.1)*
90 *(27.4)*							11.7 *(5.3)*	11.6 *(5.3)*	11.4 *(5.2)*	11.3 *(5.1)*
100 *(30.5)*								9.9 *(4.5)*	9.8 *(4.4)*	9.6 *(4.4)*
110 *(33.5)*									8.4 *(3.8)*	8.3 *(3.8)*
120 *(36.6)*										7.1 *(3.2)*

This material is supplied for reference use only. Operator must refer to in−cab Crane Rating Manual and Operator's Manual to determine allowable crane lifting capacities and assembly and operating procedures.

https://truckmanualshub.com/

Tube Boom Lift Capacity Chart — 360° Rotation
ABC = 52,320 lb (*23 732kg*) Counterweight — Side Frames Extended
[All capacities are listed in kips (*mt*)]

Load Radius ft *(m)*	Boom Length — ft *(m)*						
	140 *(42.7)*	150 *(45.7)*	160 *(48.8)*	170 *(51.8)*	180 *(54.9)*	190 *(57.9)*	200 *(61.0)*
30 *(9.1)*	51.3 *(23.3)*	50.5 *(22.9)*					
35 *(10.7)*	41.4 *(18.8)*	41.2 *(18.7)*	41.1 *(18.6)*	37.6 *(17.1)*	36.6 *(16.6)*		
40 *(12.2)*	34.5 *(15.6)*	34.3 *(15.6)*	34.2 *(15.5)*	33.9 *(15.4)*	33.9 *(15.4)*	31.1 *(14.1)*	27.5 *(12.5)*
50 *(15.2)*	25.5 *(11.6)*	25.3 *(11.5)*	25.2 *(11.4)*	25.0 *(11.3)*	24.8 *(11.2)*	24.6 *(11.2)*	23.9 *(10.8)*
60 *(18.3)*	19.9 *(9.0)*	19.7 *(8.9)*	19.5 *(8.8)*	19.3 *(8.8)*	19.2 *(8.7)*	19.0 *(8.6)*	18.8 *(8.5)*
70 *(21.3)*	16.0 *(7.3)*	15.9 *(7.2)*	15.7 *(7.1)*	15.5 *(7.0)*	15.3 *(6.9)*	15.2 *(6.9)*	15.0 *(6.8)*
80 *(24.4)*	13.2 *(6.0)*	13.1 *(5.9)*	12.9 *(5.9)*	12.7 *(5.8)*	12.5 *(5.7)*	12.4 *(5.6)*	12.2 *(5.5)*
90 *(27.4)*	11.1 *(5.0)*	10.9 *(4.9)*	10.8 *(4.9)*	10.6 *(4.8)*	10.4 *(4.7)*	10.2 *(4.6)*	10.0 *(4.5)*
100 *(30.5)*	9.4 *(4.3)*	9.3 *(4.2)*	9.1 *(4.1)*	8.9 *(4.0)*	8.7 *(3.9)*	8.6 *(3.9)*	8.4 *(3.8)*
110 *(33.5)*	8.1 *(3.7)*	7.9 *(3.6)*	7.7 *(3.5)*	7.6 *(3.4)*	7.4 *(3.4)*	7.2 *(3.3)*	7.0 *(3.2)*
120 *(36.6)*	7.0 *(3.2)*	6.8 *(3.1)*	6.6 *(3.0)*	6.5 *(2.9)*	6.3 *(2.9)*	6.1 *(2.8)*	5.9 *(2.7)*
130 *(39.6)*	6.0 *(2.7)*	5.9 *(2.7)*	5.7 *(2.6)*	5.5 *(2.5)*	5.3 *(2.4)*	5.2 *(2.4)*	5.0 *(2.3)*
140 *(42.7)*		5.1 *(2.3)*	4.9 *(2.2)*	4.7 *(2.1)*	4.5 *(2.0)*	4.4 *(2.0)*	4.2 *(1.9)*
150 *(45.7)*			4.2 *(1.9)*	4.0 *(1.8)*	3.9 *(1.8)*	3.7 *(1.7)*	3.5 *(1.6)*
160 *(48.8)*				3.4 *(1.5)*	3.3 *(1.5)*	3.1 *(1.4)*	2.9 *(1.3)*
170 *(51.8)*					2.7 *(1.2)*	2.6 *(1.2)*	2.4 *(1.1)*
180 *(54.9)*						2.1 *(1.0)*	1.9 *(0.9)*
190 *(57.9)*							1.5 *(0.7)*

This material is supplied for reference use only. Operator must refer to in−cab Crane Rating Manual and Operator's Manual to determine allowable crane lifting capacities and assembly and operating procedures.

https://truckmanualshub.com/

Angle Boom Make—up

Boom Length ft *(m)*	Angle Boom Extensions ft *(m)*		
	10 *(3.05)*	20 *(6.10)*	30 *(9.14)*
40 *(12.19)*			
50 *(15.24)*	1		
60 *(18.29)*		1	
70 *(21.33)*			1
80 *(24.38)*	1		1
90 *(27.43)*		1	1
100 *(30.48)*			2
110 *(33.53)*	1		2
120 *(36.58)*		1	2
130 *(39.62)*	1	1	2
140 *(42.67)*		2	2
150 *(45.72)*	1	2	2

Notes:

1. Capacities shown are in kips/metric tons (1 kip = 1,000 lb / 1 metric ton = 0.45 kips) and are not more than 75% of the tipping loads with the crane standing level on firm supporting surface. A deduction must be made from these capacities for weight of hook block, hook ball, sling, grapple, load weighing device, etc. When using main hook while jib or tip extension is attached, reduce capacities by values shown in Crane Rating Manual. See Operator's Manual for all limitations when raising or lowering attachment.
2. The capacities in the shaded areas are based on structural strength. The capacities in the non—shaded areas are based on stability ratings.
3. For recommended reeving, parts of line, wire rope type, and wire rope inspection, see Wire Rope Capacity Chart, Operator's Manual, and Parts Manual.
4. Load ratings are based on freely suspended loads and make no allowances for such factors as the effect of the wind, ground conditions, and operating speeds. The operator shall therefore reduce load ratings in order to take these conditions into account. Refer to the Crane Rating Manual for Wind Speed Restrictions.
5. The 22 ft *(6.71m)* live mast must be used for all capacities listed.
6. The least stable rated condition is over the side.
7. Booms must be erected and lowered over the end for maximum stability.
8. Main boom length must not exceed 150 ft *(45.72m)*.

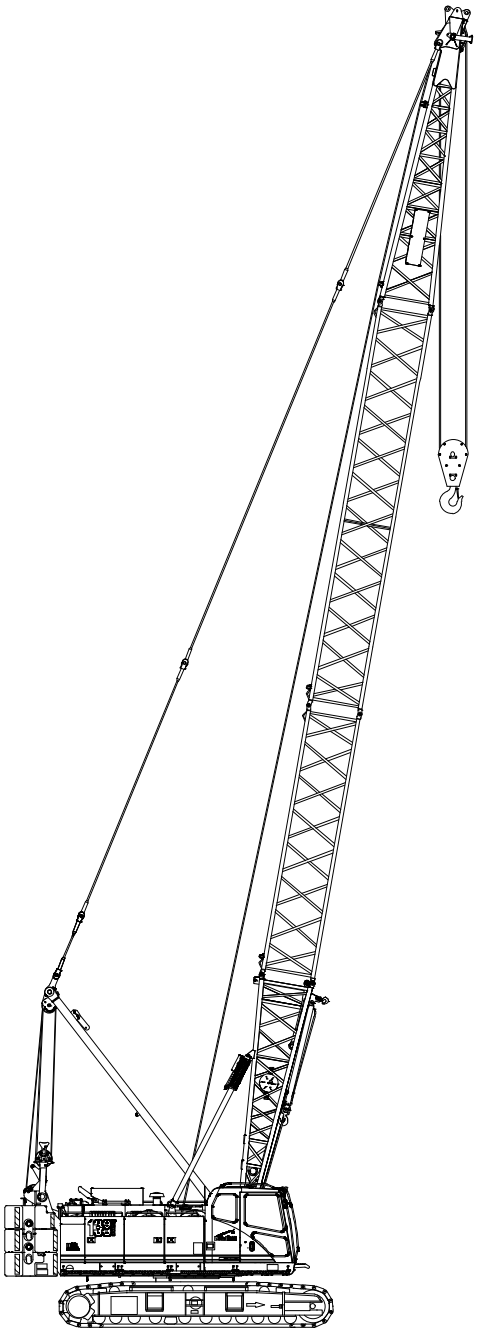

https://truckmanualshub.com/

Angle Boom Working Range Diagram

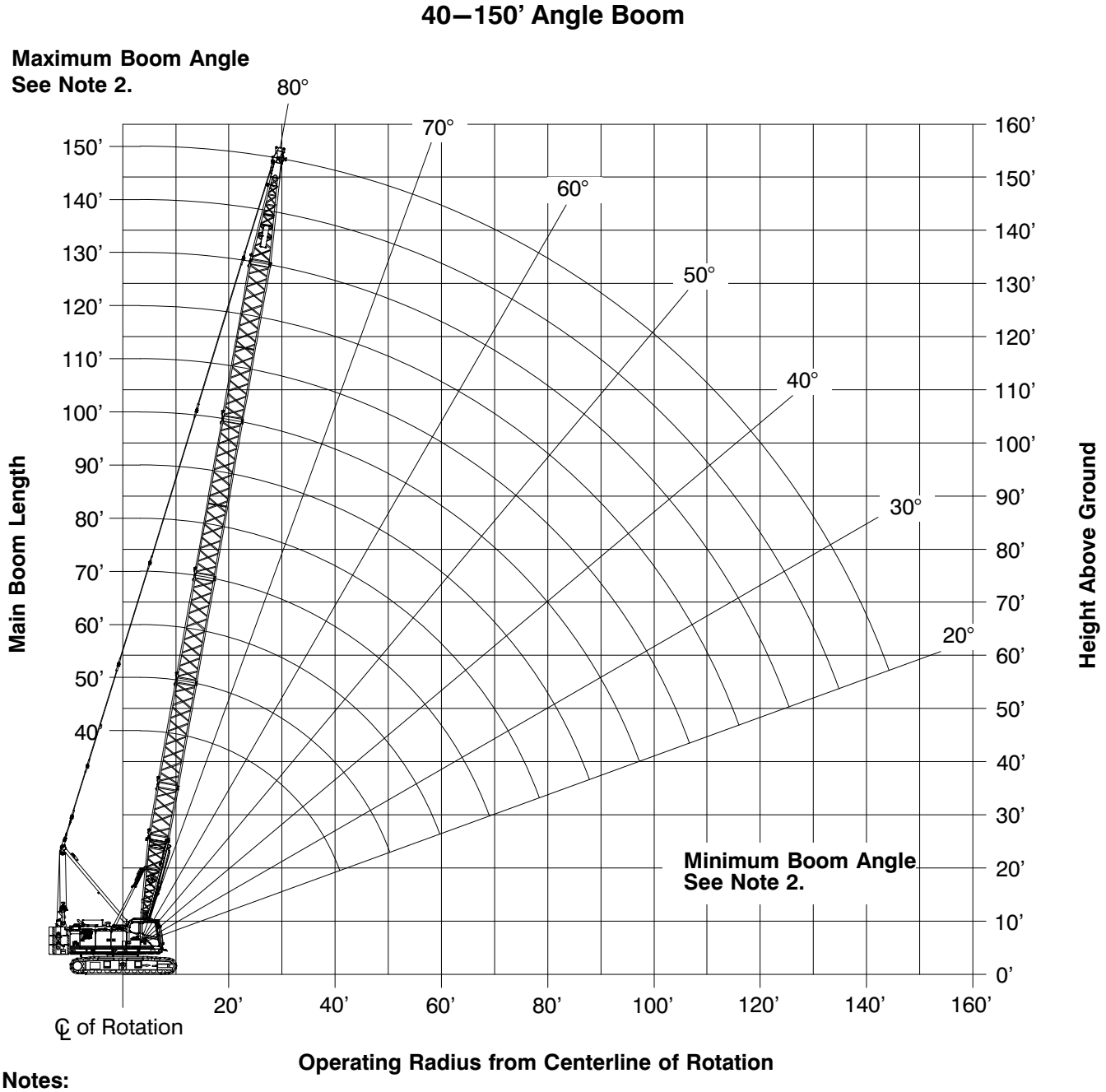

Notes:

1. **Boom geometry shown is for unloaded condition and crane standing level on firm supporting surface. Boom deflection, subsequent radius, and boom angle change must be accounted for when applying load to hook.**
2. **Maximum and minimum boom angles are equal to the values listed in the capacity chart for each boom length.**

https://truckmanualshub.com/

Angle Boom Load Chart

Angle Boom Lift Capacity Chart — 360° Rotation
ABC = 52,320 lb (*23 732kg*) Counterweight — Side Frames Extended
[All capacities are listed in kips (*mt*)]

Load Radius ft *(m)*	Boom Length — ft *(m)*											
	40 *(12.2)*	50 *(15.2)*	60 *(18.3)*	70 *(21.3)*	80 *(24.4)*	90 *(27.4)*	100 *(30.5)*	110 *(33.5)*	120 *(36.6)*	130 *(39.6)*	140 *(42.7)*	150 *(45.7)*
11 *(3.4)*	160.0 *(72.6)*											
12 *(3.7)*	160.0 *(72.6)*	142.4 *(64.6)*										
13 *(4.0)*	151.3 *(68.6)*	137.9 *(62.6)*										
14 *(4.3)*	141.1 *(64.0)*	132.8 *(60.2)*	121.7 *(55.2)*									
15 *(4.6)*	132.1 *(59.9)*	129.4 *(58.7)*	118.6 *(53.8)*									
16 *(4.9)*	124.2 *(56.3)*	123.9 *(56.2)*	116.4 *(52.8)*	105.6 *(47.9)*								
17 *(5.2)*	117.1 *(53.1)*	116.9 *(53.0)*	113.5 *(51.5)*	103.0 *(46.7)*								
18 *(5.5)*	110.7 *(50.2)*	110.6 *(50.2)*	109.2 *(49.5)*	101.0 *(45.8)*	93.7 *(42.5)*							
19 *(5.8)*	101.3 *(45.9)*	101.4 *(46.0)*	101.5 *(46.0)*	98.5 *(44.7)*	92.0 *(41.7)*	84.3 *(38.2)*						
20 *(6.1)*	93.3 *(42.3)*	93.4 *(42.4)*	93.5 *(42.4)*	93.4 *(42.4)*	88.5 *(40.1)*	82.7 *(37.5)*						
25 *(7.6)*	66.5 *(30.2)*	66.6 *(30.2)*	66.6 *(30.2)*	66.6 *(30.2)*	66.5 *(30.2)*	66.3 *(30.1)*	66.2 *(30.0)*	65.3 *(29.6)*	61.1 *(27.7)*			
30 *(9.1)*	51.3 *(23.3)*	51.4 *(23.3)*	51.4 *(23.3)*	51.3 *(23.3)*	51.2 *(23.2)*	51.0 *(23.1)*	50.9 *(23.1)*	50.7 *(23.0)*	50.5 *(22.9)*	50.3 *(22.8)*	49.3 *(22.4)*	44.6 *(20.2)*
35 *(10.7)*	41.6 *(18.9)*	41.6 *(18.9)*	41.6 *(18.9)*	41.5 *(18.8)*	41.3 *(18.7)*	41.2 *(18.7)*	41.0 *(18.6)*	40.8 *(18.5)*	40.6 *(18.4)*	40.4 *(18.3)*	40.2 *(18.2)*	39.9 *(18.1)*
40 *(12.2)*	34.7 *(15.7)*	34.8 *(15.8)*	34.7 *(15.7)*	34.6 *(15.7)*	34.5 *(15.6)*	34.3 *(15.6)*	34.1 *(15.5)*	33.9 *(15.4)*	33.7 *(15.3)*	33.5 *(15.2)*	33.3 *(15.1)*	33.1 *(15.0)*
50 *(15.2)*		25.8 *(11.7)*	25.8 *(11.7)*	25.7 *(11.7)*	25.5 *(11.6)*	25.3 *(11.5)*	25.1 *(11.4)*	24.9 *(11.3)*	24.7 *(11.2)*	24.5 *(11.1)*	24.3 *(11.0)*	24.0 *(10.9)*
60 *(18.3)*			20.3 *(9.2)*	20.1 *(9.1)*	19.9 *(9.0)*	19.7 *(8.9)*	19.5 *(8.8)*	19.3 *(8.8)*	19.1 *(8.7)*	18.9 *(8.6)*	18.6 *(8.4)*	18.4 *(8.3)*
70 *(21.3)*				16.5 *(7.5)*	16.1 *(7.3)*	15.9 *(7.2)*	15.7 *(7.1)*	15.5 *(7.0)*	15.3 *(6.9)*	15.0 *(6.8)*	14.8 *(6.7)*	14.5 *(6.6)*
80 *(24.4)*						13.1 *(5.9)*	12.9 *(5.9)*	12.7 *(5.8)*	12.5 *(5.7)*	12.2 *(5.5)*	12.0 *(5.4)*	11.7 *(5.3)*
90 *(27.4)*							10.8 *(4.9)*	10.6 *(4.8)*	10.3 *(4.7)*	10.1 *(4.6)*	9.9 *(4.5)*	9.6 *(4.4)*
100 *(30.5)*								8.9 *(4.0)*	8.7 *(3.9)*	8.4 *(3.8)*	8.2 *(3.7)*	7.9 *(3.6)*
110 *(33.5)*									7.3 *(3.3)*	7.1 *(3.2)*	6.8 *(3.1)*	6.6 *(3.0)*
120 *(36.6)*										6.0 *(2.7)*	5.7 *(2.6)*	5.5 *(2.5)*
130 *(39.6)*											4.8 *(2.2)*	4.5 *(2.0)*
140 *(42.7)*												3.7 *(1.7)*

This material is supplied for reference use only. Operator must refer to in—cab Crane Rating Manual and Operator's Manual to determine allowable crane lifting capacities and assembly and operating procedures.

https://truckmanualshub.com/

Jib Attachment Make—up

Jib Length ft *(m)*	Jib Extensions	Basic Frontstay Pendants Required	Pairs Of Frontstay Extension Pendants Required
	15 ft *(4.57 m)*	63 ft 5 in *(19.33m)*	14 ft 6 in *(4.42m)*
30 *(9.15)*		1	
45 *(13.72)*	1	1	1
60 *(18.29)*	2	1	2

Notes:

1. Capacities shown are in kips/metric tons (1 kip = 1,000 lb / 1 metric ton = 0.45 kips) and are not more than 75% of the tipping loads with the crane standing level on a firm supporting surface.
2. A deduction must be made from these capacities for the weight of the main boom hook block or hook ball, jib hook block or hook ball, slings, grapples, load weighing devices, etc. When using main hook while jib is attached, reduce capacities by values shown in Crane Rating Manual. See Operator's Manual for all limitations when raising or lowering attachment.
3. The capacities in the shaded areas are based on structural strength. The capacities in the non—shaded areas are based on stability ratings.
4. Load ratings are based on freely suspended loads and make no allowances for such factors as the effect of the wind, ground conditions, and operating speeds. The operator shall therefore reduce load ratings in order to take these conditions into account. Refer to the Crane Rating Manual for Wind Speed Restrictions.
5. These capacities are for "ABC" counterweight.
6. These capacities are for 360° working areas.
7. These capacities are for 30—60 ft *(9.15—18.28m)* jib lengths only.
8. The jib cannot be used on tube boom lengths over 180 ft *(54.86m)* and angle boom lengths over 150 ft *(45.72m)*.
9. The least stable rated condition is over the side.
10. These capacities are in compliance with ASME/ANSI B30.5 at date of manufacture.
11. These capacities apply only to the crane as originally manufactured and normally equipped by Link-Belt Construction Equipment Company.

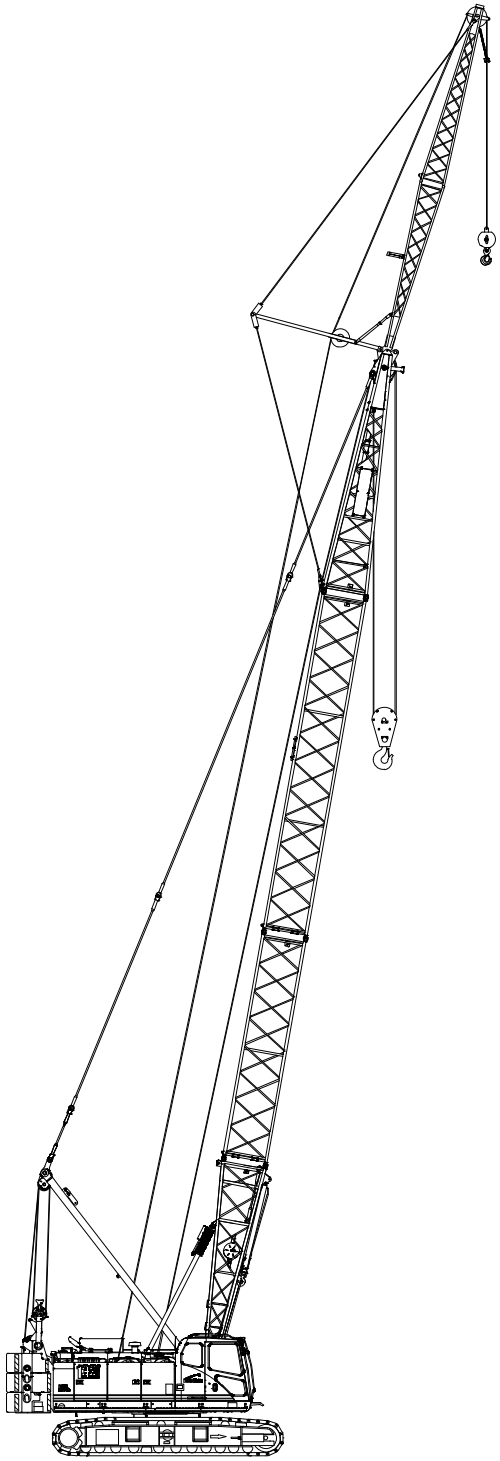

https://truckmanualshub.com/

Tube Boom + Jib Working Range Diagram

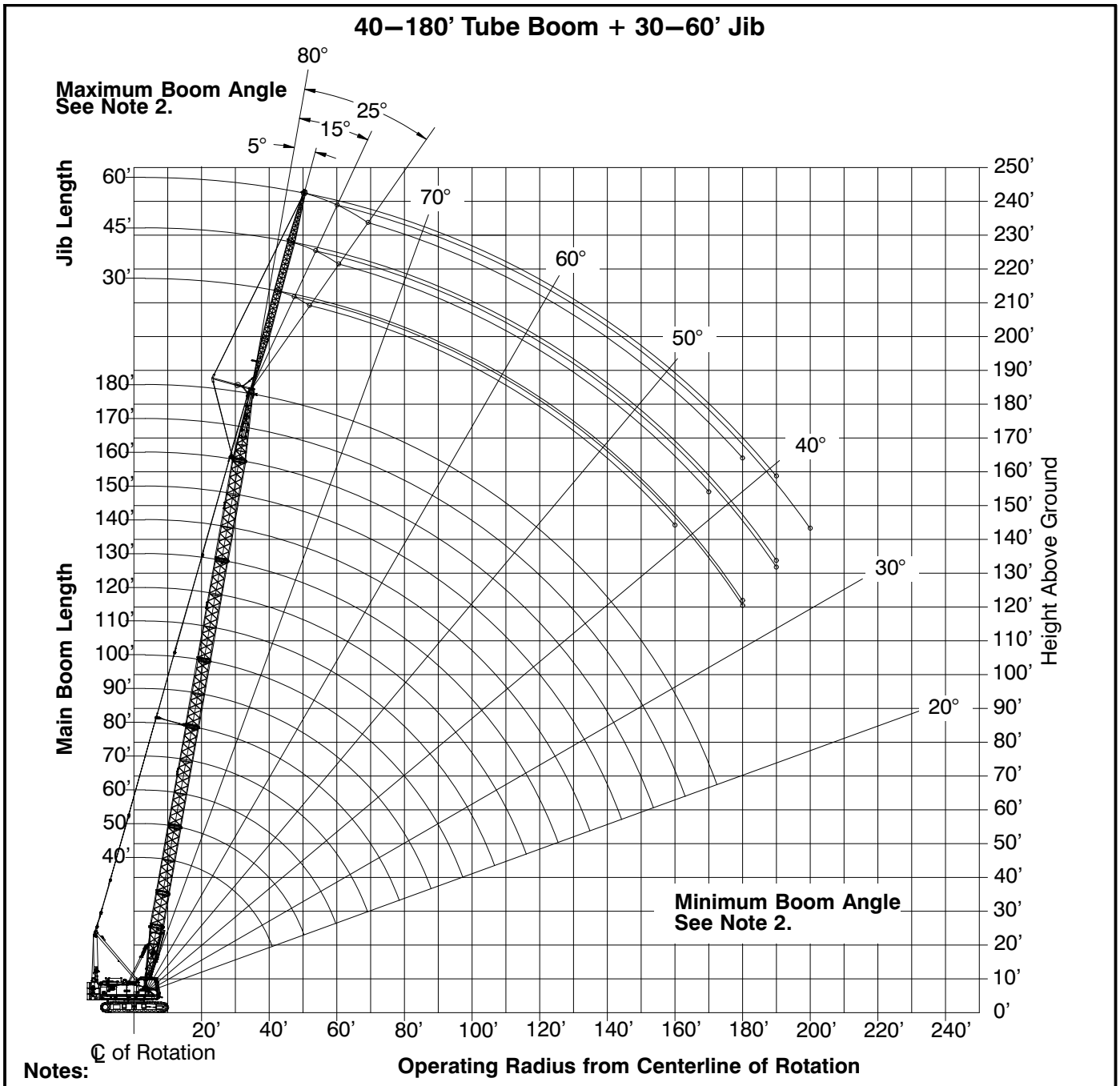

Notes:

1. **Boom geometry shown is for unloaded condition and crane standing level on firm supporting surface. Boom deflection, subsequent radius, and boom angle change must be accounted for when applying load to hook.**
2. **Maximum and minimum boom angles are equal to the values listed in the capacity chart for each boom length.**

https://truckmanualshub.com/

Tube Boom + Jib Load Charts

Tube Boom + 30 ft (*9.14m*) Offset Jib Length — 360° Rotation
ABC [52,320 lb (*23,732kg*)] Counterweight
[All capacities are listed in kips (*mt*)]

5° Offset						15° Offset						25° Offset					
Load Radius ft (*m*)	Main Boom Length ft (*m*)					Load Radius ft (*m*)	Main Boom Length ft (*m*)					Load Radius ft (*m*)	Main Boom Length ft (*m*)				
	40 (*12.2*)	80 (*24.3*)	100 (*30.5*)	140 (*42.7*)	180 (*54.9*)		40 (*12.2*)	80 (*24.3*)	100 (*30.5*)	140 (*42.7*)	180 (*54.9*)		40 (*12.2*)	80 (*24.3*)	100 (*30.5*)	140 (*42.7*)	180 (*54.9*)
20 (*6.1*)	24.0 (*10.9*)					20 (*6.1*)						20 (*6.1*)					
25 (*7.6*)	24.0 (*10.9*)					25 (*7.6*)	24.0 (*10.9*)					25 (*7.6*)					
30 (*9.1*)	24.0 (*10.9*)	24.0 (*10.9*)	24.0 (*10.9*)			30 (*9.1*)	24.0 (*10.9*)					30 (*9.1*)	19.8 (*9.0*)				
35 (*10.7*)	24.0 (*10.9*)	24.0 (*10.9*)	24.0 (*10.9*)			35 (*10.7*)	23.8 (*10.8*)	24.0 (*10.9*)	24.0 (*10.9*)			35 (*10.7*)	17.8 (*8.1*)	20.6 (*9.3*)			
40 (*12.2*)	24.0 (*10.9*)	24.0 (*10.9*)	24.0 (*10.9*)	24.0 (*10.9*)		40 (*12.2*)	21.2 (*9.6*)	24.0 (*10.9*)	24.0 (*10.9*)			40 (*12.2*)	17.0 (*7.7*)	19.2 (*8.7*)	20.2 (*9.2*)		
50 (*15.2*)	21.1 (*9.6*)	24.0 (*10.9*)	24.0 (*10.9*)	24.0 (*10.9*)	18.1 (*8.2*)	50 (*15.2*)	17.4 (*7.9*)	23.2 (*10.5*)	24.0 (*10.9*)	24.0 (*10.9*)	17.1 (*7.8*)	50 (*15.2*)	14.8 (*6.7*)	17.3 (*7.8*)	18.0 (*8.2*)	19.6 (*8.9*)	
60 (*18.3*)	17.4 (*7.9*)	20.7 (*9.4*)	20.4 (*9.3*)	19.7 (*8.9*)	17.4 (*7.9*)	60 (*18.9*)	16.3 (*7.4*)	21.0 (*9.5*)	20.7 (*9.4*)	20.0 (*9.1*)	16.3 (*7.4*)	60 (*18.9*)	13.3 (*6.0*)	16.1 (*7.3*)	17.1 (*7.8*)	18.0 (*8.2*)	14.6 (*6.6*)
70 (*21.3*)		16.9 (*7.7*)	16.5 (*7.5*)	15.8 (*7.2*)	15.1 (*6.8*)	70 (*21.3*)		17.1 (*7.8*)	16.8 (*7.6*)	16.1 (*7.3*)	15.4 (*7.0*)	70 (*21.3*)		14.8 (*6.7*)	15.8 (*7.2*)	16.4 (*7.4*)	14.0 (*6.4*)
80 (*24.4*)		14.1 (*6.4*)	13.7 (*6.2*)	13.0 (*5.9*)	12.3 (*5.6*)	80 (*24.8*)		14.2 (*6.4*)	13.9 (*6.3*)	13.2 (*6.0*)	12.6 (*5.7*)	80 (*24.8*)		13.8 (*6.3*)	14.1 (*6.4*)	13.5 (*6.1*)	12.8 (*5.8*)
90 (*27.4*)		12.0 (*5.4*)	11.6 (*5.3*)	10.9 (*4.9*)	10.1 (*4.6*)	90 (*27.4*)		12.1 (*5.5*)	11.8 (*5.4*)	11.1 (*5.0*)	10.4 (*4.7*)	90 (*27.4*)			11.9 (*5.4*)	11.2 (*5.1*)	10.6 (*4.8*)
100 (*30.5*)		10.3 (*4.7*)	10.0 (*4.5*)	9.2 (*4.2*)	8.4 (*3.8*)	100 (*30.5*)		10.4 (*4.7*)	10.1 (*4.6*)	9.4 (*4.3*)	8.6 (*3.9*)	100 (*30.5*)			10.1 (*4.6*)	9.5 (*4.3*)	8.8 (*4.0*)
110 (*33.5*)			8.6 (*3.9*)	7.8 (*3.5*)	7.1 (*3.2*)	110 (*33.5*)			8.7 (*3.9*)	8.0 (*3.6*)	7.3 (*3.3*)	110 (*33.5*)				8.1 (*3.7*)	7.4 (*3.4*)
120 (*36.6*)			7.5 (*3.4*)	6.7 (*3.0*)	5.9 (*2.7*)	120 (*36.6*)				6.8 (*3.1*)	6.1 (*2.8*)	120 (*36.6*)				6.9 (*3.1*)	6.3 (*2.9*)
130 (*39.6*)				5.8 (*2.6*)	5.0 (*2.3*)	130 (*39.6*)				5.9 (*2.7*)	5.2 (*2.4*)	130 (*39.6*)				6.0 (*2.7*)	5.3 (*2.4*)
140 (*42.7*)				5.0 (*2.3*)	4.2 (*1.9*)	140 (*42.7*)				5.1 (*2.3*)	4.3 (*2.0*)	140 (*4267*)					4.4 (*2.0*)
150 (*45.7*)				4.3 (*2.0*)	3.5 (*1.6*)	150 (*45.7*)				4.4 (*2.0*)	3.6 (*1.6*)	150 (*45.7*)					3.7 (*1.7*)
160 (*48.8*)				3.7 (*1.7*)	2.9 (*1.3*)	160 (*48.8*)					3.0 (*1.4*)	160 (*4887*)					3.1 (*1.4*)
170 (*51.8*)					2.4 (*1.1*)	170 (*51.8*)					2.5 (*1.1*)	170 (*51.8*)					
180 (*54.9*)					2.0 (*0.9*)	180 (*54.9*)					2.0 (*0.9*)	180 (*54.9*)					
190 (*57.9*)						190 (*57.9*)						190 (*57.9*)					

This material is supplied for reference use only. Operator must refer to in—cab Crane Rating Manual and Operator's Manual to determine allowable crane lifting capacities and assembly and operating procedures.

https://truckmanualshub.com/

Tube Boom + 45 ft (*13.7m*) Offset Jib Length − 360° Rotation
ABC [52,320 lb (*23,732kg*)] Counterweight
[All capacities are listed in kips (*mt*)]

5° Offset						15° Offset						25° Offset					
Load Radius ft (*m*)	Main Boom Length ft (*m*)					Load Radius ft (*m*)	Main Boom Length ft (*m*)					Load Radius ft (*m*)	Main Boom Length ft (*m*)				
	40 (*12.2*)	80 (*24.3*)	100 (*30.5*)	140 (*42.7*)	180 (*54.9*)		40 (*12.2*)	80 (*24.3*)	100 (*30.5*)	140 (*42.7*)	180 (*54.9*)		40 (*12.2*)	80 (*24.3*)	100 (*30.5*)	140 (*42.7*)	180 (*54.9*)
25 (*7.6*)	24.0 (*10.9*)					25 (*7.6*)						25 (*7.6*)					
30 (*9.1*)	24.0 (*10.9*)	24.0 (*10.9*)				30 (*9.1*)	19.2 (*8.7*)					30 (*9.1*)					
35 (*10.7*)	21.8 (*9.9*)	24.0 (*10.9*)	24.0 (*10.9*)			35 (*10.7*)	17.3 (*7.8*)					35 (*10.7*)					
40 (*12.2*)	19.1 (*8.7*)	24.0 (*10.9*)	24.0 (*10.9*)	24.0 (*10.9*)		40 (*12.2*)	16.7 (*7.6*)	18.2 (*8.3*)				40 (*12.2*)	12.6 (*5.7*)				
50 (*15.2*)	16.7 (*7.6*)	20.8 (*9.4*)	22.9 (*10.4*)	22.2 (*10.1*)	15.9 (*7.2*)	50 (*15.2*)	13.6 (*6.2*)	17.2 (*7.8*)	17.3 (*7.8*)	18.4 (*8.3*)		50 (*15.2*)	10.6 (*4.8*)	12.3 (*5.6*)	12.9 (*5.9*)		
60 (*18.3*)	13.7 (*6.2*)	17.5 (*7.9*)	19.7 (*8.9*)	19.4 (*8.8*)	15.3 (*6.9*)	60 (*18.9*)	11.5 (*5.2*)	14.8 (*6.7*)	16.2 (*7.3*)	17.2 (*7.8*)	13.8 (*6.3*)	60 (*18.9*)	9.2 (*4.2*)	11.0 (*5.0*)	11.6 (*5.3*)	12.6 (*5.7*)	
70 (*21.3*)	11.7 (*5.3*)	16.6 (*7.5*)	16.7 (*7.6*)	16.0 (*7.3*)	14.6 (*6.6*)	70 (*21.3*)	10.0 (*4.5*)	13.1 (*5.9*)	14.3 (*6.5*)	15.8 (*7.2*)	13.3 (*6.0*)	70 (*21.3*)	8.2 (*3.7*)	9.9 (*4.5*)	10.6 (*4.8*)	11.6 (*5.3*)	11.3 (*5.1*)
80 (*24.4*)	10.2 (*4.6*)	14.2 (*6.4*)	13.9 (*6.3*)	13.1 (*5.9*)	12.4 (*5.6*)	80 (*24.8*)		11.7 (*5.3*)	12.9 (*5.9*)	13.5 (*6.1*)	12.7 (*5.8*)	80 (*24.8*)		9.1 (*4.1*)	9.8 (*4.4*)	10.8 (*4.9*)	10.8 (*4.9*)
90 (*27.4*)		12.1 (*5.5*)	11.7 (*5.3*)	11.0 (*5.0*)	10.2 (*4.6*)	90 (*27.4*)		10.6 (*4.8*)	11.7 (*5.3*)	11.3 (*5.1*)	10.6 (*4.8*)	90 (*27.4*)		8.5 (*3.9*)	9.1 (*4.1*)	10.1 (*4.6*)	10.5 (*4.8*)
100 (*30.5*)		10.5 (*4.8*)	10.1 (*4.6*)	9.3 (*4.2*)	8.5 (*3.9*)	100 (*30.5*)		9.8 (*4.4*)	10.2 (*4.6*)	9.6 (*4.4*)	8.9 (*4.0*)	100 (*30.5*)		7.9 (*3.6*)	8.5 (*3.9*)	9.5 (*4.3*)	9.2 (*4.2*)
110 (*33.5*)		9.1 (*4.1*)	8.7 (*3.9*)	7.9 (*3.6*)	7.2 (*3.3*)	110 (*33.5*)		9.1 (*4.1*)	8.9 (*4.0*)	8.2 (*3.7*)	7.5 (*3.4*)	110 (*33.5*)			8.1 (*3.7*)	8.4 (*3.8*)	7.7 (*3.5*)
120 (*36.6*)		8.0 (*3.6*)	7.6 (*3.4*)	6.8 (*3.1*)	6.0 (*2.7*)	120 (*36.6*)			7.7 (*3.5*)	7.0 (*3.2*)	6.3 (*2.9*)	120 (*36.6*)				7.2 (*3.3*)	6.5 (*2.9*)
130 (*39.6*)			6.7 (*3.0*)	5.9 (*2.7*)	5.1 (*2.3*)	130 (*39.6*)			6.8 (*3.1*)	6.1 (*2.8*)	5.3 (*2.4*)	130 (*39.6*)				6.2 (*2.8*)	5.5 (*2.5*)
140 (*42.7*)				5.1 (*2.3*)	4.3 (*2.0*)	140 (*42.7*)				5.2 (*2.4*)	4.5 (*2.0*)	140 (*4267*)				5.3 (*2.4*)	4.7 (*2.1*)
150 (*45.7*)				4.4 (*2.0*)	3.6 (*1.6*)	150 (*45.7*)				4.5 (*2.0*)	3.8 (*1.7*)	150 (*45.7*)				4.6 (*2.1*)	3.9 (*1.8*)
160 (*48.8*)				3.8 (*1.7*)	3.0 (*1.4*)	160 (*48.8*)				3.9 (*1.8*)	3.2 (*1.5*)	160 (*4887*)					3.3 (*1.5*)
170 (*51.8*)				3.3 (*1.5*)	2.5 (*1.1*)	170 (*51.8*)					2.6 (*1.2*)	170 (*51.8*)					2.7 (*1.2*)
180 (*54.9*)					2.0 (*0.9*)	180 (*54.9*)					2.2 (*1.0*)	180 (*54.9*)					
190 (*57.9*)					1.6 (*0.7*)	190 (*57.9*)					1.7 (*0.8*)	190 (*57.9*)					

This material is supplied for reference use only. Operator must refer to in−cab Crane Rating Manual and Operator's Manual to determine allowable crane lifting capacities and assembly and operating procedures.

https://truckmanualshub.com/

Tube Boom + 60 ft (*18.3m*) Offset Jib Length — 360° Rotation
ABC [52,320 lb (*23,732kg*)] Counterweight
[All capacities are listed in kips (*mt*)]

5° Offset						15° Offset						25° Offset					
Load Radius ft (*m*)	Main Boom Length ft (*m*)					Load Radius ft (*m*)	Main Boom Length ft (*m*)					Load Radius ft (*m*)	Main Boom Length ft (*m*)				
	40 (*12.2*)	80 (*24.3*)	100 (*30.5*)	140 (*42.7*)	180 (*54.9*)		40 (*12.2*)	80 (*24.3*)	100 (*30.5*)	140 (*42.7*)	180 (*54.9*)		40 (*12.2*)	80 (*24.3*)	100 (*30.5*)	140 (*42.7*)	180 (*54.9*)
30 (*9.1*)	21.2 (*9.6*)					30 (*9.1*)						30 (*9.1*)					
35 (*10.7*)	18.3 (*8.3*)	23.0 (*10.4*)				35 (*10.7*)						35 (*10.7*)					
40 (*12.2*)	17.3 (*7.8*)	20.4 (*9.3*)	22.3 (*10.1*)			40 (*12.2*)	13.8 (*6.3*)					40 (*12.2*)					
50 (*15.2*)	13.8 (*6.3*)	17.3 (*7.8*)	18.3 (*8.3*)	19.0 (*8.6*)		50 (*15.2*)	11.2 (*5.1*)	13.4 (*6.1*)	14.3 (*6.5*)			50 (*15.2*)	8.6 (*3.9*)				
60 (*18.3*)	11.3 (*5.1*)	15.3 (*6.9*)	17.1 (*7.8*)	17.2 (*7.8*)	13.4 (*6.1*)	60 (*18.9*)	9.4 (*4.3*)	11.6 (*5.3*)	12.4 (*5.6*)	13.9 (*6.3*)		60 (*18.9*)	7.4 (*3.4*)	8.4 (*3.8*)	8.8 (*4.0*)		
70 (*21.3*)	9.6 (*4.4*)	13.0 (*5.9*)	14.7 (*6.7*)	15.2 (*6.9*)	12.9 (*5.9*)	70 (*21.3*)	8.1 (*3.7*)	10.1 (*4.6*)	11.0 (*5.0*)	12.4 (*5.6*)	11.2 (*5.1*)	70 (*21.3*)	6.5 (*2.9*)	7.6 (*3.4*)	8.0 (*3.6*)	8.6 (*3.9*)	8.9 (*4.0*)
80 (*24.4*)	8.3 (*3.8*)	11.3 (*5.1*)	12.8 (*5.8*)	13.2 (*6.0*)	12.3 (*5.6*)	80 (*24.8*)	7.1 (*3.2*)	9.0 (*4.1*)	9.8 (*4.4*)	11.2 (*5.1*)	10.8 (*4.9*)	80 (*24.8*)	5.8 (*2.6*)	6.9 (*3.1*)	7.3 (*3.3*)	8.0 (*3.6*)	8.5 (*3.9*)
90 (*27.4*)	7.3 (*3.3*)	10.0 (*4.5*)	11.3 (*5.1*)	11.1 (*5.0*)	10.3 (*4.7*)	90 (*27.4*)	6.4 (*2.9*)	8.1 (*3.7*)	8.9 (*4.0*)	10.3 (*4.7*)	10.2 (*4.6*)	90 (*27.4*)		6.3 (*2.9*)	6.7 (*3.0*)	7.4 (*3.4*)	7.9 (*3.6*)
100 (*30.5*)		9.0 (*4.1*)	10.1 (*4.6*)	9.4 (*4.3*)	8.6 (*3.9*)	100 (*30.5*)		7.4 (*3.4*)	8.1 (*3.7*)	9.4 (*4.3*)	9.0 (*4.1*)	100 (*30.5*)		5.9 (*2.7*)	6.3 (*2.9*)	6.9 (*3.1*)	7.5 (*3.4*)
110 (*33.5*)		8.1 (*3.7*)	8.8 (*4.0*)	8.0 (*3.6*)	7.2 (*3.3*)	110 (*33.5*)		6.8 (*3.1*)	7.5 (*3.4*)	8.3 (*3.8*)	7.6 (*3.4*)	110 (*33.5*)		5.5 (*2.5*)	5.9 (*2.7*)	6.5 (*2.9*)	7.1 (*3.2*)
120 (*36.6*)		7.4 (*3.4*)	7.7 (*3.5*)	6.9 (*3.1*)	6.1 (*2.8*)	120 (*36.6*)		6.3 (*2.9*)	7.0 (*3.2*)	7.1 (*3.2*)	6.4 (*2.9*)	120 (*36.6*)			5.6 (*2.5*)	6.2 (*2.8*)	6.7 (*3.0*)
130 (*39.6*)		6.9 (*3.1*)	6.7 (*3.0*)	6.0 (*2.7*)	5.2 (*2.4*)	130 (*39.6*)			6.5 (*2.9*)	6.2 (*2.8*)	5.5 (*2.5*)	130 (*39.6*)			5.3 (*2.4*)	5.7 (*2.6*)	5.7 (*2.6*)
140 (*42.7*)			6.0 (*2.7*)	5.2 (*2.4*)	4.4 (*2.0*)	140 (*42.7*)			6.1 (*2.8*)	5.3 (*2.4*)	4.6 (*2.1*)	140 (*4267*)				5.5 (*2.5*)	4.9 (*2.2*)
150 (*45.7*)			5.3 (*2.4*)	4.5 (*2.0*)	3.7 (*1.7*)	150 (*45.7*)				4.6 (*2.1*)	3.9 (*1.8*)	150 (*45.7*)				4.8 (*2.2*)	4.1 (*1.9*)
160 (*48.8*)				3.9 (*1.8*)	3.1 (*1.4*)	160 (*48.8*)				4.0 (*1.8*)	3.3 (*1.5*)	160 (*4887*)				4.1 (*1.9*)	3.5 (*1.6*)
170 (*51.8*)				3.4 (*1.5*)	2.6 (*1.2*)	170 (*51.8*)				3.5 (*1.6*)	2.7 (*1.2*)	170 (*51.8*)					2.9 (*1.3*)
180 (*54.9*)				2.9 (*1.3*)	2.1 (*1.0*)	180 (*54.9*)				3.0 (*1.4*)	2.2 (*1.0*)	180 (*54.9*)					2.4 (*1.1*)
190 (*57.9*)					1.7 (*0.8*)	190 (*57.9*)					1.8 (*0.8*)	190 (*57.9*)					

This material is supplied for reference use only. Operator must refer to in—cab Crane Rating Manual and Operator's Manual to determine allowable crane lifting capacities and assembly and operating procedures.

https://truckmanualshub.com/

Angle Boom + Jib Working Range Diagram

40−150’ Angle Boom + 30−60’ Jib

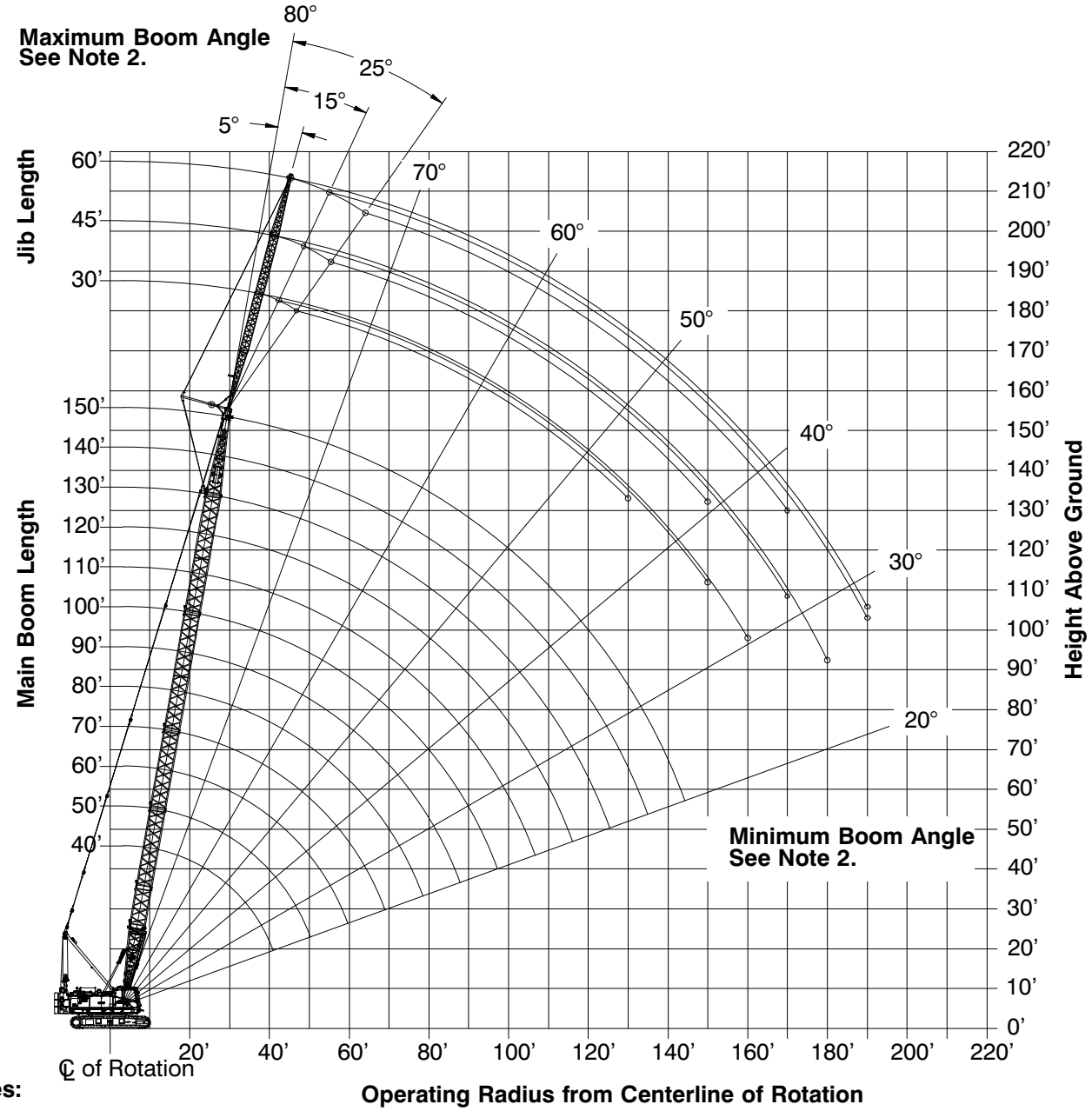

Notes:

1. **Boom geometry shown is for unloaded condition and crane standing level on firm supporting surface. Boom deflection, subsequent radius, and boom angle change must be accounted for when applying load to hook.**
2. **Maximum and minimum boom angles are equal to the values listed in the capacity chart for each boom length.**

https://truckmanualshub.com/

Angle Boom + Jib Load Charts

Angle Boom + 30 ft (*9.14m*) Offset Jib Length — 360° Rotation
ABC [52,319 lb (*23,732kg*)] Counterweight
[All capacities are listed in kips (*mt*)]

5° Offset						15° Offset						25° Offset					
Load Radius ft (*m*)	Main Boom Length ft (*m*)					Load Radius ft (*m*)	Main Boom Length ft (*m*)					Load Radius ft (*m*)	Main Boom Length ft (*m*)				
	40 (*12.2*)	80 (*24.3*)	100 (*30.5*)	120 (*36.6*)	150 (*45.7*)		40 (*12.2*)	80 (*24.3*)	100 (*30.5*)	120 (*36.6*)	150 (*45.7*)		40 (*12.2*)	80 (*24.3*)	100 (*30.5*)	120 (*36.6*)	150 (*45.7*)
20 (*6.1*)	24.0 (*10.9*)					20 (*6.1*)						20 (*6.1*)					
25 (*7.6*)	24.0 (*10.9*)					25 (*7.6*)	24.0 (*10.9*)					25 (*7.6*)					
30 (*9.1*)	24.0 (*10.9*)	24.0 (*10.9*)	24.0 (*10.9*)			30 (*9.1*)	24.0 (*10.9*)					30 (*9.1*)	19.7 (*8.9*)				
35 (*10.7*)	24.0 (*10.9*)	24.0 (*10.9*)	24.0 (*10.9*)	24.0 (*10.9*)		35 (*10.7*)	23.6 (*10.7*)	24.0 (*10.9*)	24.0 (*10.9*)			35 (*10.7*)	17.7 (*8.0*)	20.6 (*9.3*)			
40 (*12.2*)	24.0 (*10.9*)	24.0 (*10.9*)	24.0 (*10.9*)	24.0 (*10.9*)	24.0 (*10.9*)	40 (*12.2*)	21.0 (*9.5*)	24.0 (*10.9*)	24.0 (*10.9*)	24.0 (*10.9*)		40 (*12.2*)	16.9 (*7.7*)	19.1 (*8.7*)	20.1 (*9.1*)		
50 (*15.2*)	20.9 (*9.5*)	24.0 (*10.9*)	24.0 (*10.9*)	24.0 (*10.9*)	23.9 (*10.8*)	50 (*15.2*)	17.3 (*7.8*)	23.1 (*10.5*)	23.8 (*10.8*)	23.7 (*10.8*)	23.0 (*10.4*)	50 (*15.2*)	14.7 (*6.7*)	17.3 (*7.8*)	17.9 (*8.1*)	18.8 (*8.5*)	19.8 (*9.0*)
60 (*18.3*)	17.3 (*7.8*)	20.2 (*9.2*)	19.7 (*8.9*)	19.2 (*8.7*)	18.4 (*8.3*)	60 (*18.9*)	16.2 (*7.3*)	20.0 (*9.1*)	20.0 (*9.1*)	19.6 (*8.9*)	18.9 (*8.6*)	60 (*18.9*)	13.2 (*6.0*)	16.0 (*7.3*)	17.0 (*7.7*)	17.1 (*7.8*)	18.0 (*8.2*)
70 (*21.3*)		16.4 (*7.4*)	15.8 (*7.2*)	15.3 (*6.9*)	14.5 (*6.6*)	70 (*21.3*)		16.6 (*7.5*)	16.1 (*7.3*)	15.6 (*7.1*)	14.9 (*6.8*)	70 (*21.3*)		14.7 (*6.7*)	15.8 (*7.2*)	15.9 (*7.2*)	15.2 (*6.9*)
80 (*24.4*)		13.6 (*6.2*)	13.0 (*5.9*)	12.5 (*5.7*)	11.6 (*5.3*)	80 (*24.8*)		13.7 (*6.2*)	13.2 (*6.0*)	12.7 (*5.8*)	12.0 (*5.4*)	80 (*24.8*)		13.7 (*6.2*)	13.4 (*6.1*)	13.0 (*5.9*)	12.3 (*5.6*)
90 (*27.4*)		11.4 (*5.2*)	10.9 (*4.9*)	10.3 (*4.7*)	9.5 (*4.3*)	90 (*27.4*)		11.5 (*5.2*)	11.1 (*5.0*)	10.6 (*4.8*)	9.8 (*4.4*)	90 (*27.4*)			11.2 (*5.1*)	10.7 (*4.9*)	10.0 (*4.5*)
100 (*30.5*)		9.8 (*4.4*)	9.2 (*4.2*)	8.7 (*3.9*)	7.8 (*3.5*)	100 (*30.5*)			9.3 (*4.2*)	8.8 (*4.0*)	8.0 (*3.6*)	100 (*30.5*)			9.5 (*4.3*)	9.0 (*4.1*)	8.3 (*3.8*)
110 (*33.5*)			7.9 (*3.6*)	7.3 (*3.3*)	6.4 (*2.9*)	110 (*33.5*)			8.0 (*3.6*)	7.4 (*3.4*)	6.6 (*3.0*)	110 (*33.5*)				7.6 (*3.4*)	6.8 (*3.1*)
120 (*36.6*)			6.7 (*3.0*)	6.2 (*2.8*)	5.3 (*2.4*)	120 (*36.6*)				6.3 (*2.9*)	5.5 (*2.5*)	120 (*36.6*)					5.6 (*2.5*)
130 (*39.6*)				5.2 (*2.4*)	4.4 (*2.0*)	130 (*39.6*)				5.3 (*2.4*)	4.5 (*2.0*)	130 (*39.6*)					4.6 (*2.1*)
140 (*42.7*)				4.1 (*1.9*)	3.6 (*1.6*)	140 (*42.7*)					3.7 (*1.7*)	140 (*4267*)					
150 (*45.7*)					2.9 (*1.3*)	150 (*45.7*)					3.0 (*1.4*)	150 (*45.7*)					
160 (*48.8*)					1.9 (*0.9*)	160 (*48.8*)						160 (*4887*)					

This material is supplied for reference use only. Operator must refer to in—cab Crane Rating Manual and Operator's Manual to determine allowable crane lifting capacities and assembly and operating procedures.

https://truckmanualshub.com/

Angle Boom + 45 ft (*13.7m*) Offset Jib Length − 360° Rotation
ABC [52,319 lb (*23,732kg*)] Counterweight
[All capacities are listed in kips (*mt*)]

5° Offset						15° Offset						25° Offset					
Load Radius ft (*m*)	Main Boom Length ft (*m*)					Load Radius ft (*m*)	Main Boom Length ft (*m*)					Load Radius ft (*m*)	Main Boom Length ft (*m*)				
	40 (*12.2*)	80 (*24.3*)	100 (*30.5*)	120 (*36.6*)	150 (*45.7*)		40 (*12.2*)	80 (*24.3*)	100 (*30.5*)	120 (*36.6*)	150 (*45.7*)		40 (*12.2*)	80 (*24.3*)	100 (*30.5*)	120 (*36.6*)	150 (*45.7*)
25 (*7.6*)	24.0 (*10.9*)					25 (*7.6*)						25 (*7.6*)					
30 (*9.1*)	24.0 (*10.9*)	24.0 (*10.9*)				30 (*9.1*)	19.2 (*8.7*)					30 (*9.1*)					
35 (*10.7*)	21.7 (*9.8*)	24.0 (*10.9*)	24.0 (*10.9*)			35 (*10.7*)	17.3 (*7.8*)					35 (*10.7*)					
40 (*12.2*)	19.0 (*8.6*)	24.0 (*10.9*)	24.0 (*10.9*)	24.0 (*10.9*)		40 (*12.2*)	16.6 (*7.5*)	18.1 (*8.2*)				40 (*12.2*)	12.5 (*5.7*)				
50 (*15.2*)	16.6 (*7.5*)	20.7 (*9.4*)	21.1 (*9.6*)	21.1 (*9.6*)	21.7 (*9.8*)	50 (*15.2*)	13.5 (*6.1*)	17.1 (*7.8*)	17.3 (*7.8*)	17.5 (*7.9*)	18.3 (*8.3*)	50 (*15.2*)	10.5 (*4.8*)	12.2 (*5.5*)	12.8 (*5.8*)		
60 (*18.3*)	13.7 (*6.2*)	17.4 (*7.9*)	18.3 (*8.3*)	18.5 (*8.4*)	18.7 (*8.5*)	60 (*18.9*)	11.4 (*5.2*)	14.7 (*6.7*)	16.1 (*7.3*)	16.7 (*7.6*)	17.1 (*7.8*)	60 (*18.9*)	9.2 (*4.2*)	10.9 (*4.9*)	11.6 (*5.3*)	12.1 (*5.5*)	12.7 (*5.8*)
70 (*21.3*)	11.6 (*5.3*)	16.5 (*7.5*)	16.1 (*7.3*)	15.5 (*7.0*)	14.7 (*6.7*)	70 (*21.3*)	10.0 (*4.5*)	13.0 (*5.9*)	14.3 (*6.5*)	15.1 (*6.8*)	15.3 (*6.9*)	70 (*21.3*)	8.2 (*3.7*)	9.9 (*4.5*)	10.5 (*4.8*)	11.1 (*5.0*)	11.8 (*5.4*)
80 (*24.4*)	10.1 (*4.6*)	13.8 (*6.3*)	13.2 (*6.0*)	12.7 (*5.8*)	11.9 (*5.4*)	80 (*24.8*)		11.6 (*5.3*)	12.8 (*5.8*)	13.1 (*5.9*)	12.4 (*5.6*)	80 (*24.8*)		9.1 (*4.1*)	9.7 (*4.4*)	10.3 (*4.7*)	11.0 (*5.0*)
90 (*27.4*)		11.6 (*5.3*)	11.1 (*5.0*)	10.6 (*4.8*)	9.7 (*4.4*)	90 (*27.4*)		10.6 (*4.8*)	11.4 (*5.2*)	10.9 (*4.9*)	10.1 (*4.6*)	90 (*27.4*)		8.4 (*3.8*)	9.0 (*4.1*)	9.6 (*4.4*)	10.3 (*4.7*)
100 (*30.5*)		10.0 (*4.5*)	9.4 (*4.3*)	8.9 (*4.0*)	8.0 (*3.6*)	100 (*30.5*)		9.7 (*4.4*)	9.6 (*4.4*)	9.1 (*4.1*)	8.4 (*3.8*)	100 (*30.5*)		7.9 (*3.6*)	8.5 (*3.9*)	9.0 (*4.1*)	8.7 (*3.9*)
110 (*33.5*)		8.6 (*3.9*)	8.1 (*3.7*)	7.5 (*3.4*)	6.7 (*3.0*)	110 (*33.5*)		8.7 (*3.9*)	8.2 (*3.7*)	7.7 (*3.5*)	7.0 (*3.2*)	110 (*33.5*)			8.0 (*3.6*)	7.9 (*3.6*)	7.2 (*3.3*)
120 (*36.6*)			7.0 (*3.2*)	6.4 (*2.9*)	5.5 (*2.5*)	120 (*36.6*)			7.1 (*3.2*)	6.6 (*3.0*)	5.8 (*2.6*)	120 (*36.6*)				6.7 (*3.0*)	6.0 (*2.7*)
130 (*39.6*)			6.0 (*2.7*)	5.5 (*2.5*)	4.6 (*2.1*)	130 (*39.6*)				5.6 (*2.5*)	4.8 (*2.2*)	130 (*39.6*)					5.0 (*2.3*)
140 (*42.7*)				4.7 (*2.1*)	3.8 (*1.7*)	140 (*42.7*)				4.8 (*2.2*)	4.0 (*1.8*)	140 (*4267*)					4.2 (*1.9*)
150 (*45.7*)				3.9 (*1.8*)	3.1 (*1.4*)	150 (*45.7*)					3.3 (*1.5*)	150 (*45.7*)					3.4 (*1.5*)
160 (*48.8*)					2.5 (*1.1*)	160 (*48.8*)					2.6 (*1.2*)	160 (*4887*)					
170 (*51.8*)					2.0 (*0.9*)	170 (*51.8*)						170 (*51.8*)					

This material is supplied for reference use only. Operator must refer to in−cab Crane Rating Manual and Operator's Manual to determine allowable crane lifting capacities and assembly and operating procedures.

Angle Boom + 60 ft (*18.3m*) Offset Jib Length — 360° Rotation
ABC [52,319 lb (*23,732kg*)] Counterweight
[All capacities are listed in kips (*mt*)]

5° Offset						15° Offset						25° Offset					
Load Radius ft (*m*)	Main Boom Length ft (*m*)					Load Radius ft (*m*)	Main Boom Length ft (*m*)					Load Radius ft (*m*)	Main Boom Length ft (*m*)				
	40 (*12.2*)	80 (*24.3*)	100 (*30.5*)	120 (*36.6*)	150 (*45.7*)		40 (*12.2*)	80 (*24.3*)	100 (*30.5*)	120 (*36.6*)	150 (*45.7*)		40 (*12.2*)	80 (*24.3*)	100 (*30.5*)	120 (*36.6*)	150 (*45.7*)
30 (*9.1*)	21.2 (*9.6*)					30 (*9.1*)						30 (*9.1*)					
35 (*10.7*)	18.2 (*8.3*)	22.8 (*10.3*)				35 (*10.7*)						35 (*10.7*)					
40 (*12.2*)	17.3 (*7.8*)	20.3 (*9.2*)	20.7 (*9.4*)	20.6 (*9.3*)		40 (*12.2*)	13.7 (*6.2*)					40 (*12.2*)					
50 (*15.2*)	13.7 (*6.2*)	17.3 (*7.8*)	17.8 (*8.1*)	17.7 (*8.0*)	18.2 (*8.3*)	50 (*15.2*)	11.1 (*5.0*)	13.4 (*6.1*)	14.2 (*6.4*)	15.0 (*6.8*)		50 (*15.2*)	8.5 (*3.9*)				
60 (*18.3*)	11.3 (*5.1*)	15.2 (*6.9*)	16.1 (*7.3*)	16.2 (*7.3*)	16.8 (*7.6*)	60 (*18.9*)	9.3 (*4.2*)	11.5 (*5.2*)	12.4 (*5.6*)	13.1 (*5.9*)	14.1 (*6.4*)	60 (*18.9*)	7.3 (*3.3*)	8.4 (*3.8*)	8.8 (*4.0*)	9.1 (*4.1*)	
70 (*21.3*)	9.5 (*4.3*)	13.0 (*5.9*)	14.2 (*6.4*)	14.4 (*6.5*)	14.9 (*6.8*)	70 (*21.3*)	8.0 (*3.6*)	10.1 (*4.6*)	10.9 (*4.9*)	11.7 (*5.3*)	12.7 (*5.8*)	70 (*21.3*)	6.4 (*2.9*)	7.5 (*3.4*)	7.9 (*3.6*)	8.3 (*3.8*)	8.7 (*3.9*)
80 (*24.4*)	8.2 (*3.7*)	11.3 (*5.1*)	12.7 (*5.8*)	12.9 (*5.9*)	12.1 (*5.5*)	80 (*24.8*)	7.1 (*3.2*)	9.0 (*4.1*)	9.8 (*4.4*)	10.5 (*4.8*)	11.5 (*5.2*)	80 (*24.8*)	5.8 (*2.6*)	6.8 (*3.1*)	7.3 (*3.3*)	7.6 (*3.4*)	8.1 (*3.7*)
90 (*27.4*)	7.3 (*3.3*)	10.0 (*4.5*)	11.3 (*5.1*)	10.7 (*4.9*)	9.9 (*4.5*)	90 (*27.4*)	6.3 (*2.9*)	8.1 (*3.7*)	8.9 (*4.0*)	9.6 (*4.4*)	10.4 (*4.7*)	90 (*27.4*)		6.3 (*2.9*)	6.7 (*3.0*)	7.1 (*3.2*)	7.5 (*3.4*)
100 (*30.5*)		8.9 (*4.0*)	9.6 (*4.4*)	9.0 (*4.1*)	8.2 (*3.7*)	100 (*30.5*)		7.4 (*3.4*)	8.1 (*3.7*)	8.8 (*4.0*)	8.7 (*3.9*)	100 (*30.5*)		5.8 (*2.6*)	6.2 (*2.8*)	6.6 (*3.0*)	7.1 (*3.2*)
110 (*33.5*)		8.1 (*3.7*)	8.2 (*3.7*)	7.7 (*3.5*)	6.8 (*3.1*)	110 (*33.5*)		6.8 (*3.1*)	7.5 (*3.4*)	8.0 (*3.6*)	7.2 (*3.3*)	110 (*33.5*)		5.5 (*2.5*)	5.8 (*2.6*)	6.2 (*2.8*)	6.7 (*3.0*)
120 (*36.6*)		7.4 (*3.4*)	7.1 (*3.2*)	6.5 (*2.9*)	5.7 (*2.6*)	120 (*36.6*)		6.3 (*2.9*)	6.9 (*3.1*)	6.8 (*3.1*)	6.0 (*2.7*)	120 (*36.6*)			5.5 (*2.5*)	5.9 (*2.7*)	6.3 (*2.9*)
130 (*39.6*)		6.7 (*3.0*)	6.1 (*2.8*)	5.6 (*2.5*)	4.7 (*2.1*)	130 (*39.6*)			6.3 (*2.9*)	5.8 (*2.6*)	5.1 (*2.3*)	130 (*39.6*)			5.3 (*2.4*)	5.6 (*2.5*)	5.3 (*2.4*)
140 (*42.7*)			5.3 (*2.4*)	4.8 (*2.2*)	3.9 (*1.8*)	140 (*42.7*)			5.5 (*2.5*)	5.0 (*2.3*)	4.2 (*1.9*)	140 (*4267*)				5.1 (*2.3*)	4.5 (*2.0*)
150 (*45.7*)			4.4 (*2.0*)	4.1 (*1.9*)	3.2 (*1.5*)	150 (*45.7*)				4.3 (*2.0*)	3.5 (*1.6*)	150 (*45.7*)					3.7 (*1.7*)
160 (*48.8*)				3.5 (*1.6*)	2.6 (*1.2*)	160 (*48.8*)					2.8 (*1.3*)	160 (*4887*)					3.0 (*1.4*)
170 (*51.8*)					2.1 (*1.0*)	170 (*51.8*)					2.3 (*1.0*)	170 (*51.8*)					

This material is supplied for reference use only. Operator must refer to in—cab Crane Rating Manual and Operator's Manual to determine allowable crane lifting capacities and assembly and operating procedures.

https://truckmanualshub.com/

This Page Intentionally Blank

https://truckmanualshub.com/

Link-Belt Construction Equipment Company Lexington, Kentucky www.linkbelt.com

◻LinkBelt is a registered trademark. Copyright 2015. We are constantly improving our products and therefore reserve the right to change designs and specifications.