https://truckmanualshub.com/

NOBLELIFT

CE

FE3R16-SMS-001

Warning

Operators should read and understand this manual and all warning labels on the forklift before using the forklift!
Keep the manual for future reference!

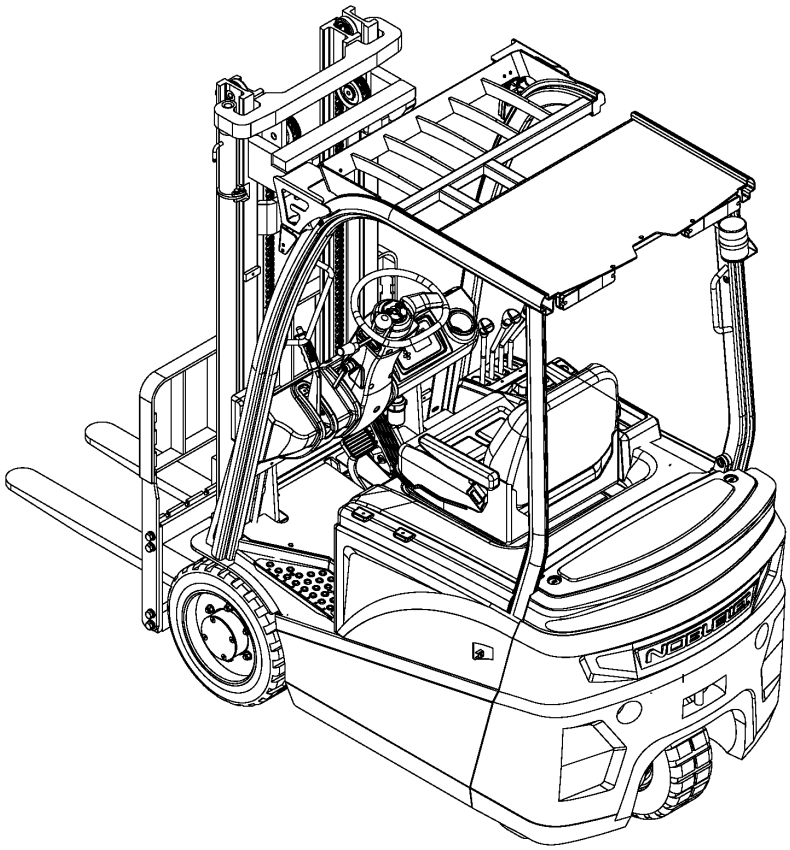

Operation & Maintenance Manual

FE3R16 N/E SERIES

Battery Counterbalanced Forklift Truck

NOBLELIFT INTELLIGENT EQUIPMENT CO.,LTD.

https://truckmanualshub.com/

Table of Contents

Introduction…… 4
Chapter 1 Precautions of using forklift…… 5
Ⅰ. Forklift transportation..... 5
Ⅱ. Forklift storage..... 5
Ⅲ. Pre-use preparation..... 5
Ⅳ. Operation of the forklift..... 5
Ⅴ. Charging of accumulator cells..... 6
Chapter 2 Structure and main performance parameters of the forklift…… 7
Ⅰ. Overall Dimension and Technical Parameters..... 7
1. Overall dimension..... 7
2 Technical Parameters..... 8
Ⅱ. Structure, principle and adjustment of the main components..... 9
1. Driving & Operation..... 9
1.1 Overview..... 9
1.2 Trouble shooting..... 10
2. Braking system..... 10
2.1 Overview..... 10
2.2 Brake pedal 10
2.3. Brake master cylinder..... 11
2.4. Brake 12
2.5 Device for parking brake control 13
2.6 Technical points for brake disassembly and adjustment..... 14
2.7 Adjustment of brake pedal 17
2.8 Troubleshooting..... 18
2.9. Maintenance..... 19
3 Steering system 20
3.1 Overview..... 20
3.2 Cycloid full hydraulic steering gear 20
3.3 hydraulic cycloid motor and rotary bearings 21
3.4 Check of steering system after being re-installed..... 22
3.5 Trouble shooting..... 23
4 electrical system 23
4.1 Overview 23
4.2 Electronic system 23
5. Accumulator…… 28
5.1 Accumulator safety precautions…… 28
5.2 Accumulator use precautions…… 28
5.3 Charging of the accumulator…… 29
5.4 Installation and replacement of the accumulator…… 31
6. Hydraulic system…… 32

https://truckmanualshub.com/

6.1 Overview…… 32
6.2 Oil pump…… 32
6.3 Multi-way valve…… 32
6.4 Lifting cylinder and the lifting chain…… 34
6.5 Governor valve…… 36
6.6 Tilt cylinder…… 36
6.7 Hydraulic oil cylinder…… 37
6.8 Maintenance and adjustment…… 37
6.9 Failure analysis…… 40
7. Lifting system…… 41
7.1 Overview…… 41
7.2 Inner and outer main frame…… 41
7.3 Fork frame…… 42
7.4 Location of rollers…… 43
7.5 Maintenance and adjustment…… 44
7.6 Installation of accessories…… 45
8. Removal and installation…… 46
8.1 Precautions…… 46
8.2 Lifting points of the detached parts…… 46
Chapter 3 0peration, use and safety of the forklift…… 48
Ⅰ. Driving and operation 48
1.Use of a new forklift 48
2. The relationship between forklift stability and load 48
3. Load centre and load curve 48
4. Forklift stability 48
5.Transportation and handling of the forklift 49
6. Preparation before driving 49
7. Driving 50
8. Parking and temporary parking 51
9. Use method of the accumulator 51
10. Stacking 53
11. Un-stacking 53
12. Storage 54
Ⅱ. Operation device and use method 55
1. Diagram on forklift parts and operation device 55
2 Combination instrument 55
3 Switches 55
4 Controllers 56
5 Forklift body 59
Ⅲ. About safety 60
1. Site and working environment of the forklift 60

https://truckmanualshub.com/

2. Safety rules..... 60
3 Handling of the forklift..... 71
4 How to avoid rollover and how to protect yourself from accidents..... 72
5 Safety issues during maintenance and protection 74
6 Safety during use of the accumulator..... 75
7 Signs 77
Chapter IV Periodic inspection and maintenance of forklift..... 78
Ⅰ. Check before operation..... 78
1. Check points and contents..... 78
2. Check procedures 79
Ⅱ. Checking after operation 83
Ⅲ. Clean the forklift 83
1. Clean the forklift surface 83
2. Clean the chain 83
3 Clean the electric system 83
4 . After the cleaning..... 83
Ⅳ. Regular maintenance 83
1. Regular maintenance schedule 85
2. Replace critical safety components periodically 93
Ⅴ. Lubricating parts and recommended oils 94
1. Lubricating parts..... 94
2. Recommended oils..... 94
Ⅵ. Forklift noise and vibration parameters table..... 95

https://truckmanualshub.com/

Introduction

This manual briefly describes the technical parameters of the counterbalanced accumulator forklift made by our company, and the structure of its main components, working principle and requirements on operation and maintenance. Please read this manual carefully before operation, so as to achieve proper driving and maintenance, and to ensure safe and effective material handling. Meanwhile, this manual aims to guide operators to use the forklift in an appropriate way and to maximize its performance! We hope that operators and equipment managers could read it carefully before use! Please strictly observe the provisions and cautions stipulated in this manual and operate the forklift with caution and care, so that the forklift can be maintained in its best status and optimal performance can be ensured. When you lease or transfer your forklift, always keep this manual with it.

For highlighting purpose, the following icons are used in this manual:

1. ⃠ ----refers to a potential danger; if not avoided, it may cause serious human injury, vehicle damage or fire.

2. ⚠ ----refers to a potential danger; if not avoided，it may cause minor human injury, or local damage to the vehicle.。

3. ☞ ----Refers to general cuations and instructions during use.

⚠Most parts of the product are made from recyclable steel. The recycling and disposal of cast-offs resulted during use, maintenance, cleaning and disassembling of the product has to comply with local regulations without pollution to the environment. The recycling and disposal of the cast-offs should only be operated by specialised personnel in the designated area. The cast-offs, such as hydraulic oil, batteries and electronic units, if improperly disposed, may be hazardous to the environment and human health.

Special Declaration:

1）This product is strictly prohibited for potentially explosive hazardous environments.

2）The Noise level of the normal use of this product is compliant with international standards EN 12,053.

3）The vibration level of the normal use of the product is compliant with international standards EN13059.

4）The normal use of the product's environmental requirements as follows: no more than 2000 meters above sea level and the temperature range of-5 ° C—+40 ° c, humidity should no more than 90%, The wind speed is no more than 5m/s.

If you need to use in the freezer for a long time，Or in special environment, it is needed to install special attachments. Please contact our technical staff.

5）Product recall serive is available when serial faulties occur.

Due to continuous product improvement, Noblelift reserves the right to make changes in product designs and specifications without prior notice. For the latest product parameters, please feel free to contact us. All parameters provided herein are as of the publication date of the Instruction

https://truckmanualshub.com/

Manual.

Chapter 1 Precautions of using forklift

Forklift drivers and managers must remember the principle of "safety first", and carefully read this maintenance manual. Operators shall be in strict accordance with this manual to ensure safe and normal operation.

Ⅰ. Forklift transportation

The following shall be noted when transporting forklift by container or trucks:

(1) Apply the parking brake;

(2) Fix the main frame and counterweight with steel wires, and use pads to wedge the corresponding positions at the front and rear tires;

(3) Start lifting from the positions indicated by the "Craning Label" on the forklift.

Ⅱ Storage of the forklift

(1) Reduce the main frame to the lowest position;

(2) Turn off the electric lock, place the lever rod to the "Nertral" position and unplug the power cord;

(3) Tighten the hand brake;

(4) Use pads to wedge the front and rear tires ;

(5) If the forklift is to be left unused for a long time, its wheels should be elevated. The accumulator should be recharged once a month.

Ⅲ Pre-use preparation

(1) Check if all instruments are normal;

(2) Check the tire pressure;

(3) Check the condition of the levers and pedals;

(4) Check if the accumulator voltage is within the working scope, and if the specific gracity of the electrolyte and the height level of the liquid are appropriate;

(5) Check if the connectors and plug contacts of the electrical system are reliable;

(6) Check for leakage of the hydraulic fluid, electrolyte and brake fluid;

(7) Check the tightness of major fasteners;

(8) Check if the lighting and signal lamps are normal;

(9) Release the parking brake;

(10) Conduct test actions such as lifting and lowering the main frame, tilting forwards and backwards, steering and braking;

(11) Contamination level of hydraulic oil shall not be greater than 12.

Ⅳ. Operation of the forklift

(1) Only trained and licensed drivers can drive the forklift;

(2) Operators shall wear security shoes, hats, clothing and gloves for protection purpose;

(3) Operators should note the performance and working conditions of mechanical, hydraulic, electrical and MOSFET governor;

(4) Power on by switching on the key switch, choose the right position of direction switch, and then rotate the steering wheel to see if the forklift can steer.
If ok, slowly depress the speed pedal and maintain an appropriate speed;

(5) Observe the voltage meter, if the voltage indicated by the voltage meter is below 41V during working, immediately stop operation, and recharge the accumulator or replace with another fully charged accumulator;

(6) Weight of loads handled should not exceed the specified value and fork spacing and location should be appropriate. The fork should be fully inserted below all the goods, which shall be uniformly distributed on the fork. Uneven loading shall be avoided;

(7) If the distance between loads‘ center of gravity and the fork arm is no more than 500mm, the maximum load shall be the rated capacity. If the distance between loads‘ center of gravity and the fork arm is more than 500mm, the maximum load shall be less than the rated capacity;

(8) When carrying loads, the main frame should tit backwards to the maximum extent and the fork arm should be in contact with the goods. Raise the fork to about 200mm away from the ground before driving;

(9) Standing under the fork and on the lifting fork are forbidden;

(10) The initial velocity should not be too fast when lifting and lowering goods;

(11) Never operate the forklift and accessories at places other than the driver's seat;

(12) When the main frame is moving forwards and backwards to the maximum extent, or when the fork is lifted to its maximum height, the operator must rapidly set the lever to the neutral position;

(13) When the main frame is lifting, driving or turning of the forklift is not allowed;

(14) When driving the forklift, drivers should pay attention to pedestrians, road obstacles and potholes, and also note the gap above the forklift;

(15) Drivers should be very careful when driving on ramps. When driving on a ramp with slope gradient more than one-tenth, do move forward for up-hilling and backward for down-hilling.
Never perform steering during up-hilling ad down-hilling process. And avoid loading and unloading when the forklift is down-hilling;

(16) Slow down when steering on wet or slippery road surfaces; be very careful and drive slowly when driving on docks or temporary boards;

(17) For forklifts with lifting height greater than 3 meters, users shall be careful to guard against falling down of the goods overhead and take protective measures if necessary;

(18) Do not carry unfixed or loosely stacked goods and be careful when handling goods with large size;

(19) When driving the forklift with load, emergency braking should be avoided;

(20) Before leaving the forklift, lower the fork down to the ground, set the lever at neutral position and disconnect power. In case of parking on a ramp,
apply the parking brake. Use wedge pads to fix the wheels if you need to park for a long time;

(21) The safety valve pressures of multiple unit valve and steering device have been tuned up before leaving the factory. During use, users
shall not adjust it, because excessive pressure may cause damage to the entire hydraulic system or its components ,and the motor;

(22) Tire inflation pressure shall be in line with that stipulated on the "Air pressure" plate;

(23) When moving with no load, forklift with accessories shall be operated in a way as if carrying a load.

V. Charging of accumulator cells

(1) When charging the accumulator cells for the first time and further charging, users should be in strict compliance with the instructions;

(2) When operating the forklift, if the accumulator voltage decreases to 41V, or that of its single cell drops below l.7V , or the instrument alarms, users shall immediately stop using the forklift and replace the accumulator or recharge it before further use;

(3) Check the specific gravity, liquid level and temperature of the electrolyte from time to time during the charging process;

(4) Forklift must be recharged as soon as possible after use. Never leave the forklift uncharged longer than 24 hours. When charging, pay attention to prevent
insufficient charging and over-charging, so as not to damage the battery;

(5) Users should conduct balanced recharging to the forklift in normal use once a month, so as to adjust the proportion among the accumulator units.

Please refer to the relevant sections of this Mannual for detailed charging and maintenance methods.

https://truckmanualshub.com/

Chapter 2 Structure and main parameters of the forklift

Ⅰ. Overall size and performance parameters of the forklift

1. Overall dimensions (as shown in Figure 1-1)

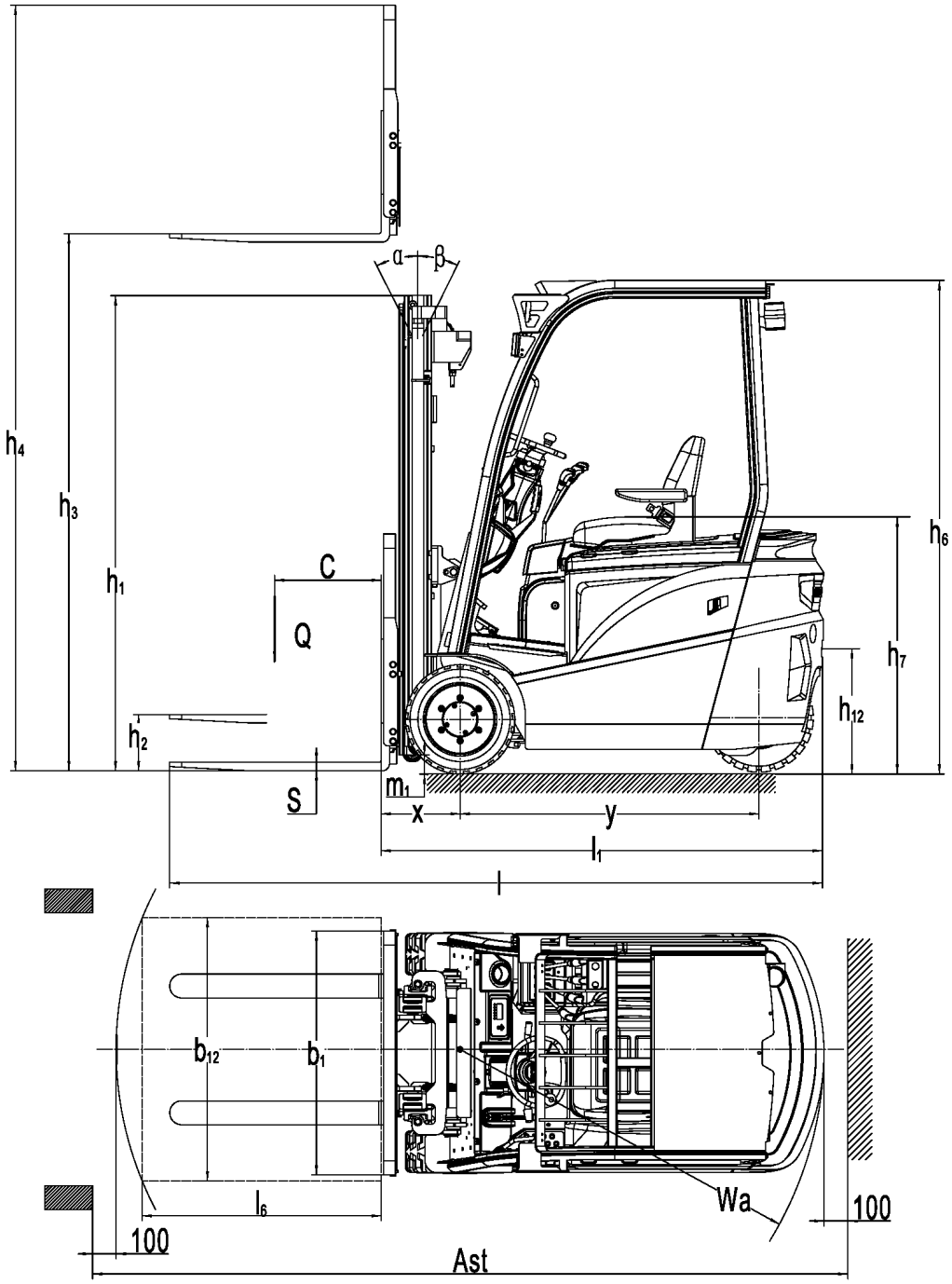

Figure 1-1 Overall dimension

2. Technical parameters (Table 1-1)

Features	1.2	Model No.		FE3R16E	FE3R16N
	1.3	Driving Method: Electric (accumulator or power supply), diesel, petrol, LPG, manual		Electric	Electric
	1.4	Operation Method: Manual, travel, standing, seat, picking out		seat	seat
	1.5	Nominal Load Capacity	Q (kg)	1600	1600
	1.6	Load Center Distance	C (mm)	500	500
	1.8	Fork Overhang	x (mm)	340	340
	1.9	Axial Distance	y (mm)	1240	1240
Weight	2.1	Including accumulator (refer to 6.5)	kg	2960	3000
	2.2	Axle load with full load, front/rear	kg	3980/580	4000/600
	2.3	Axle load with empty load, front/rear	kg	1260/1700	1280/1720
Body & Wheel	3.2	Tires, front		18×7-8-14PR	457/178-308
	3.3	Tires, rear		18×7-8	18×7-8
	3.6	Tread, front	b_{10} (mm)	822	822
	3.7	Tread, rear	b_{11}(mm)	0	0
Basic Dimension	4.1	Mast/fork carriage tilt angle, forward/backward	α/β(°)	3/5	3/5
	4.2	Mast lowered height	h_1(mm)	1986	1986
	4.3	Free lift height	h_2(mm)	105	105
	4.4	Lift height	h_3(mm)	3000	3000
	4.5	Mast extended height	h_4(mm)	3980	3980
	4.7	Overhead guard height	h_6(mm)	2060	2060
	4.8	Seat height	h_7(mm)	1050	1050
	4.12	Towing pin height	h_{10}(mm)	570	570
	4.19	Overall length	l_1(mm)	2785	2785
	4.20	Body length (excluding fork)	l_2(mm)	1865	1865
	4.21	Overall width	b_1/b_2(mm)	1000	1000
	4.22	Fork dimension	s/e/l(mm)	35/100/920	35/100/920
	4.24	Fork carriage width	b_3(mm)	980	980
	4.31	Mast bottom ground clearance	m_1(mm)	92	92
	4.32	Wheelbase center ground clearance	m_2(mm)	97	97
	4.33	Aisle width, 1000X1200 tray (1200 across fork)	Ast(mm)	3288	3288
	4.35	Turning radius	Wa(mm)	1520	1520
Performance Parameter	5.1	Traveling speed, full/empty	km/h	10/11	10/11
	5.2	Lifting speed, full/empty	m/s	0.24/0.37	0.24/0.37
	5.7	Gradeability, full/empty S_2 30min	%	10/13	10/13
Motor	6.1	Power of driving motor (S_2 60 min)	kw	5	5
	6.2	Power of lifting motor (S_3 15%)	kw	8.6	8.6
	6.4	Accumulator voltage/rated capacity K_5	V/Ah	48/350 (48V/400)	48/350 (48V/400)
	6.5	Accumulator weight	kg	590	590
Others	8.1	Driving Control Type		AC	AC
	8.2	Operation pressure for attachments	MPa	16	16

	8.3	Attachment oil flow	L/min	10	10
	8.4	Noise level audible by driver, based on EN 12 053	db	70	70

Ⅱ.Structure, principle and adjustment of the forklift's main components

1. Driving & Operation

1.1 Overview

The transmission system of forklift is composed of reduction gearbox assembly, differential assembly and drive axle. Driving gear of decelerator is connected directly with the travel motor, so the driving speed of forklift increases with the increase of motor speed and the driving direction can be changed by changing the direction of motor rotation.

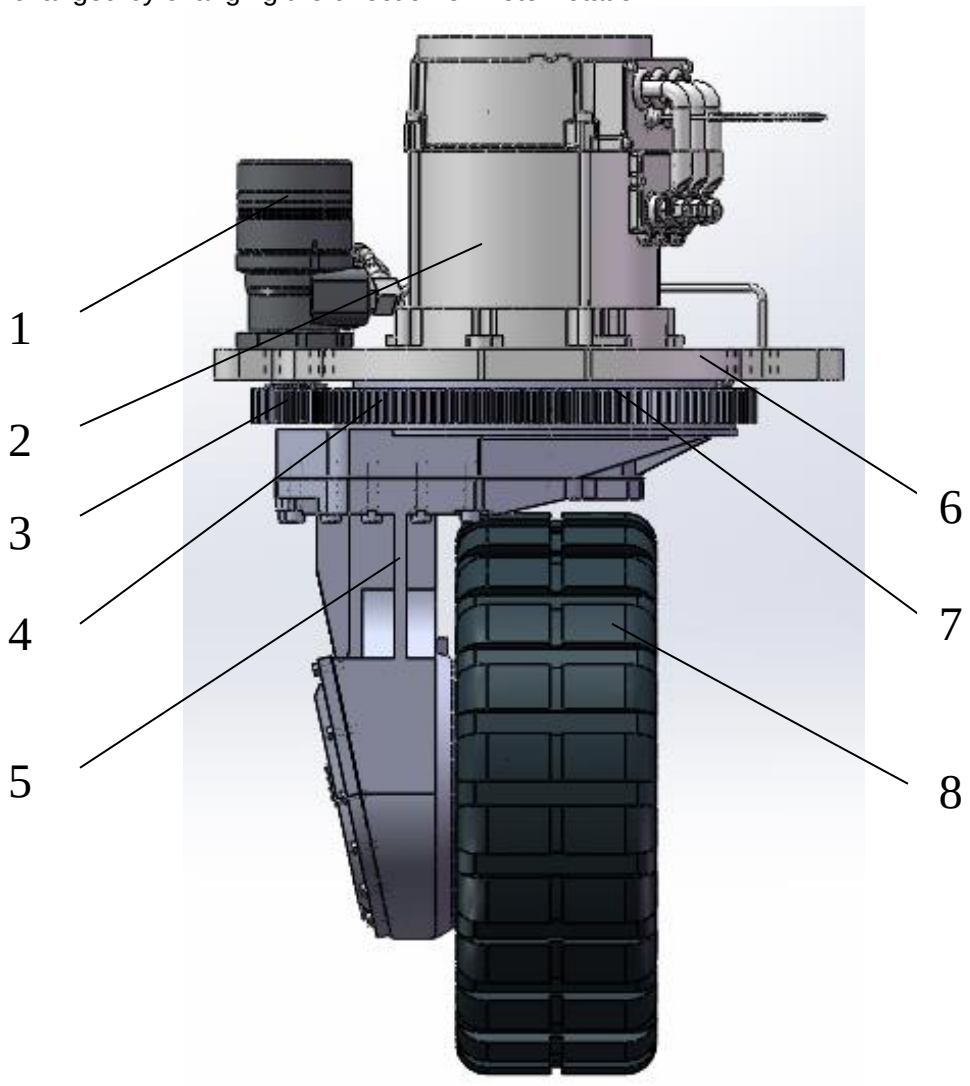

1. Gerotor motor 2. Motor 3.Pinion
4.Big gear wheel 5.Gear-box 6.Mounting panel
7. Plane bearing 8. Tyre

Figure 2-1 Driving & Operation

This actuation steering axle has the structure compact reasonable, the operational performance reliable, the transmission steady, the noise low status merit.The bridge shell uses the cast steel material, the rigidity is good, bearing capacity is big, the main performance parameter (sees Table 2-1)

2. Technical parameters (Table 2-1)

Model		AC
Power of motor	kW	5
Motor voltage	V	48
Walking drive ratio	i	20.87
steering gear ratio	i	5.364
Tyre size		18X7-8

1.2 Failure Analysis

Table 2-2 Failure Diagnosis and Correction

Failures	Possible causes	Correction methods
High vibration	Looseness of fastening bolts at the installation and connection points	Tighten the bolts
Excessive oil temperature	Deterioration of gear oil	Replace
	Abnormal oil level	Add or reduce oil
	Jamming of moving parts	Adjustment
Oil leakage	Looseness of bolts at the combining surfaces	Tighten the bolts
	Damaged seals	Replace
Noise	Damaged rotary gear	Replace
	Damaged bearing	Replace

2. Braking system

2.1 Overview

The braking system consists of the brake pedal, brake master cylinder and wheel brakes. The two wheel brakes in the front are hydraulic internal expansion brakes.

2.2 Brake pedal

The structure of brake pedal is shown in Figure 2-2. The pedal would transfer the pedal force into brake oil pressure through the push rod on the brake master cylinder.

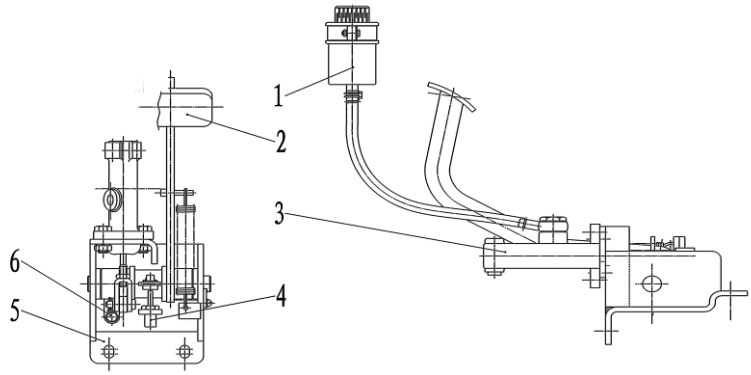

1 Brake oil cup 2. Brake pedal 3. Brake master cylinder
4. Brake sensor 5. Brake support 6. Spacing bolt

Figure 2-2 Brake pedal assembly

2.3 Brake master cylinder (Figure 2-3)

The master cylinder includes a valve seat, a check valve, a return spring, the main cup, piston and auxiliary cup. Stop washer and stop steel wire are used to fix the ends of the cylinder and rubber dust cover is applied to protect its external surface. Master cylinder piston works by depressed the brake pedal to touch the push rod. When the brake pedal is depressed, the push rod will push the piston forward, and the brake fluid in the cylinder will flow back to the storage tank through the oil return hole until the main cup block the oil return hole. When the main cup block the oil return hole, the brake fluid in front cavity of the master cylinder is compressed and the check valve is opened. The fluid will flow to the wheel cylinder through the brake pipelines. Thus, each wheel cylinder piston will protrude and the friction disk of the brake shoe will contact the brake drum to achieve slowing down or braking. At this point, the back cavity of piston will be filled with brake fluid from the oil return hole and the oil inlet. When the brake pedal is released, the piston will be pressed backwards by the return spring, and at the same time the brake fluid in each brake cylinder is also compressed by the return spring of the brake shoe, so that the brake fluid will flow back to the master cylinder (front cavity of the piston) through the check valve. Then the piston will return to its normal position, while the brake fluid in the master cylinder flows back to the storage tank through the oil returning hole. The pressure of the check valve will be adjusted to be in certain proportional of the remaining pressures in the brake pipeline and the brake cylinder, so that the cylinder cup will be correctly placed to prevent oil spilling and to eliminate air resistance that may occur during emergency brake.

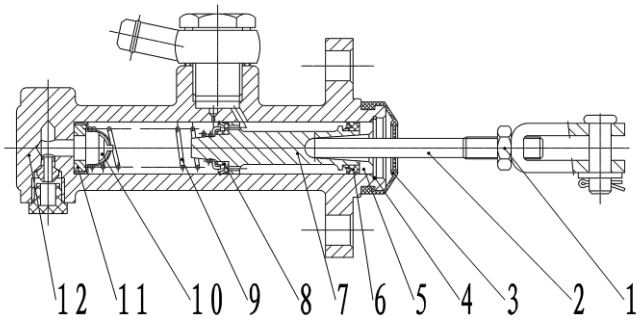

1. Locking nut 2. Pushing rod 3. Dust cover 4. Stop steel wire
5. Stop washer 6. Auxiliary cup 7. Piston 8. Main cup
9. Spring 10. Check valve 11. Valve seat 12. Pump body

Figure 2-3 Brake Master Cylinder

2.4 Brake

The brake is a dual-shoe brake installed on both sides of the drive axle. The brake consists of two groups of brake shoes, brake cylinders and regulators. One end of the brake shoe contacts the fixed pin and the other end contacts the regulating device. The return spring and the compression spring bar hold the parking brake. In addition, the parking brake mechanism and automatic regulating device are also assembled onto the brake. See figure 2-4

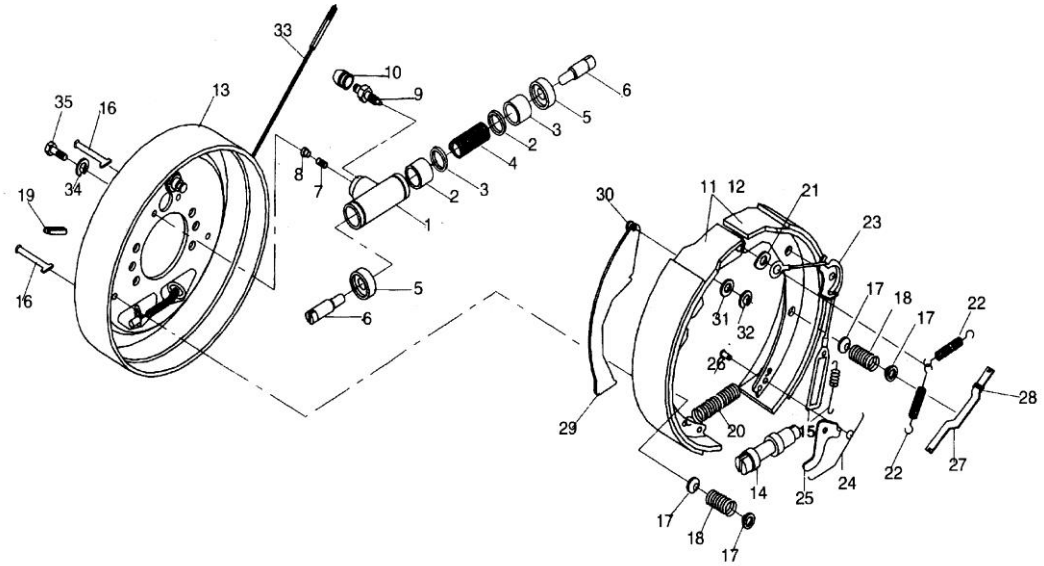

1 Brake cylinder	2. Brake cylinder Piston	3. Cylinder sleeve	4. Brake cylinder spring
5. Brake cylinder shield	6. Piston rod of brake cylinder	7 Oil plug of brake cylinder	8. Thread guard
9. Bleeder screw of brake cylinder	10. Bleeder screw shield	11. Brake shoes with assembly （front）	12. Brake shoes with assembly（back）
13. Brake backing plate assembly	14. Clearance adjuster	15. Spring farrowed device	16. Compression spring bar
17. Compression spring base	18. Spring	19. Rubber plug	20. Return spring
21. Guide plate	22. retainer spring	23. Orientation block	24. Spring
25 pallet	26. Pin	27. Hand braking	28. Spring
29. Hand braking bars	30. pin	31. spring washer	32. Stem pin block circle
33. Braking wiring assembly	34.sring	35.Bolt	

Figure 2-4 Brake

(1) Brake action

Brake cylinder exerts the same force to the main brake shoe and auxiliary brake shoe to suppress the brake drum, until the upper end of auxiliary brake shoe contacts against the fixed pin. Then the brake shoe will move towards the rotation direction of the brake drum. After contact against the fixed pin, the friction between friction disk and brake drum will increase. The main brake shoe will exert a pressure larger than the brake cylinder pressure on the auxiliary brake shoe, resulting in a large braking force. See Figure 2-5

When moving backwards, the brake action is in reverse to that of moving forwards. See Figure 2-6

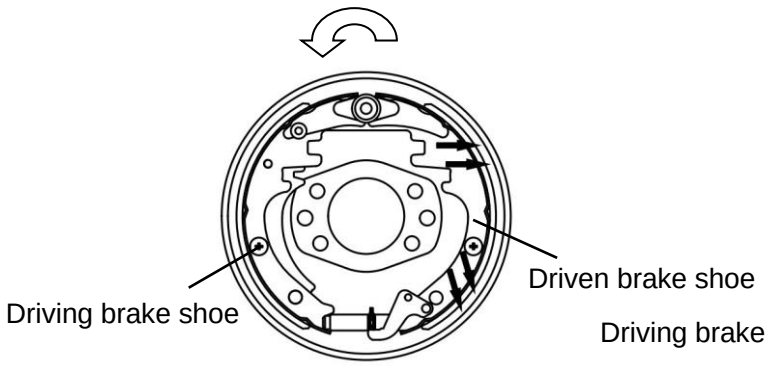

Figure 2-5 Action when moving forwards

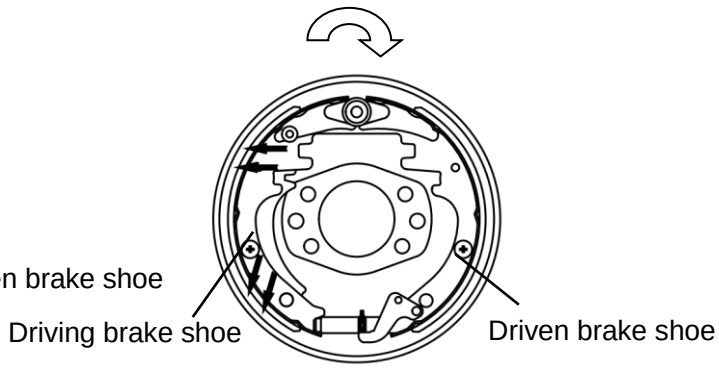

Figure 2-6 Action when moving backwards

(2) Parking brake

Mounted in the wheel brake, the parking brake consists of the lever and push lever. The lever is mounted on side of the main brake shoe by a pin,
and the pulling action spread through the push lever to the auxiliary brake shoe. See figure 2-7

(3) Clearance self-adjusting mechanism

The clearance self-adjusting mechanism can maintain appropriate clearance between the friction disk and the brake drum. See Figure 2-8 for its structure. Clearance self-adjusting mechanism works only when the forklift is moving in reverse.

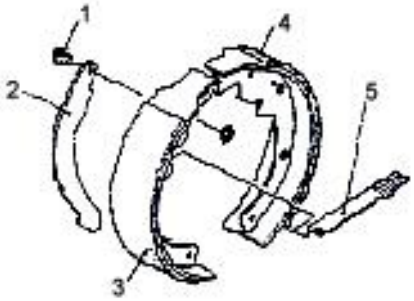

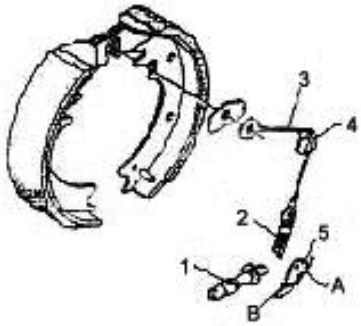

1. Pin 2. lever 3. Driving brake shoe 4. Driven brake shoe 5. Support rod

Figure 2-7 Parking brake

1. Regulating mechanism 2. Spring 3. Cable 4. Guide groove 5. lever

Figure 2-8 Clearance self-adjusting mechanism

(4) Action of the automatic clearance adjusting mechanism

If braking during reversing of the forklift, the auxiliary and main brake shoes contact with each other and rotate together, so that the lever will rotate rightwards around A point as shown in Figure 2-13, and B point is then elevated. After the brake is released, the lever will rotate leftwards by the spring force to lower B point. When the clearance between brake hub and friction disk is enlarged, the vertical distance of B point's rotation will increase. The regulator will be toggled for one more tooth and the regulating lever lengthens (see Figure 2-9), so that the clearance shrinks. Clearance adjustment range falls within 0.40mm ~ 0.45mm.

2.5 Control device of parking brake (Figure 2-10)

The regulator located at the cam-type parking brake lever can be used to adjust the braking force.

Braking force adjustment: Turn the regulator clockwise to increase the braking force; turn the regulator counter-clockwise to reduce the braking force.

Pulling force：196N～294N

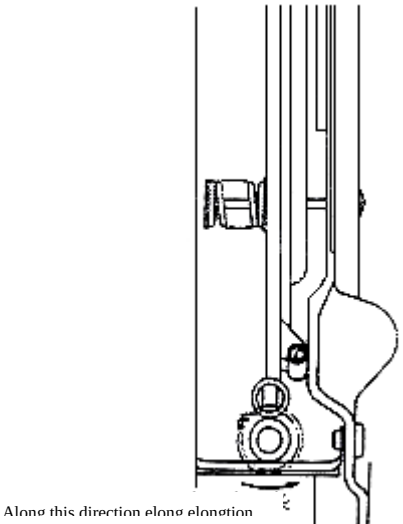

Figure 2-9 Clearance self-adjusting mechanism

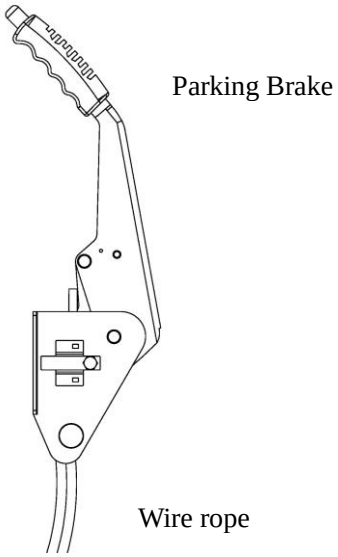

Figure 2-10 Parking brake lever

2.6 Technical points for brake disassembly and adjustment

Disassembly, assembly and adjustment of the brake and adjustment of brake pedal when the wheel and wheel hub is removed.

2.6.1 Disassembly of the brake

(1) Remove the support pin, regulating bar, regulating device and spring on the auxiliary brake shoe. See figure 2-11

(2) Remove the return spring on the shoe. See figure 2-12

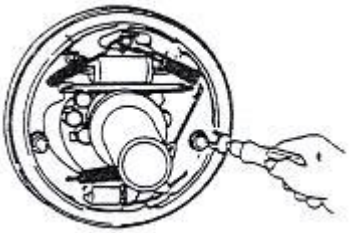

Figure 2-11

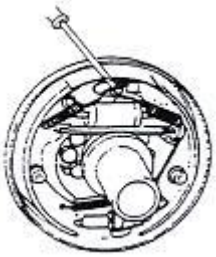

Figure 2-12

(3) Remove the fixing spring on the main brake shoe. See figure 2-13

(4) Remove the main and auxiliary brake shoes. And also remove the regulator and the regulator spring. See figure 2-14

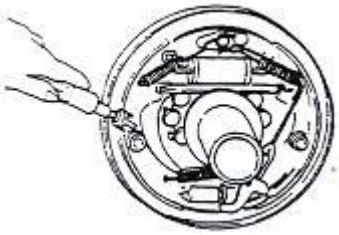

Figure 2-13

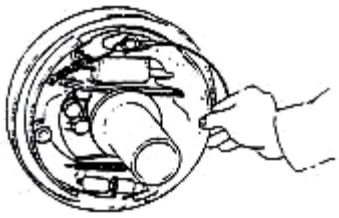

Figure 2-14

(5) Remove the brake pipe from the brake cylinder. Then remove the mounting bolt of the brake cylinder, and remove the brake cylinder from the brake backing plate. See figure 2-15

6) Remove the E-shaped retaining ring used for fixing the brake cable on the brake backing plate. Then remove the mounting bolt on the brake backing plate and dismount the brake backing plate from the drive axle. See figure 2-16

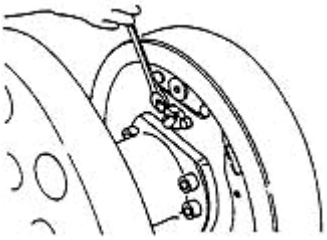

Figure 2-15

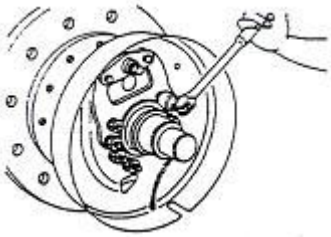

Figure 2-16

(7) Disassemle the brake cylinder: Remove the dust-proof ring. Press on one end of the piston to push out the other end and then press down the headed out end of piston with fingers. See figure 2-17

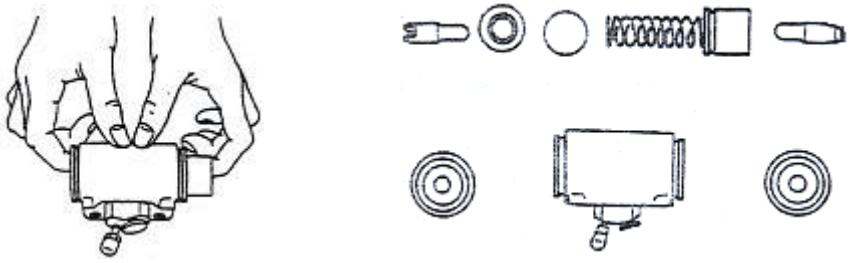

Figure 2-17

2.6.2 Check of the brake

Inspect the parts and then repair or replace damaged ones.

(1) Check the surface of the brake cylinder and peripheral surface of the piston for rust; then measure the clearance between the piston and the brake cylinder.

Standard size: 0.03mm-0.10mm; Maximum size: 0.15mm

(2) Conduct visual inspection of the piston cup for damage and deformation. Replace the cup if there is any abnormality.

(3) Measure the free length of brake cylinder spring. Replace it if it exceeds the baseline.

(4) Measure the thickness of friction disk. Replace it if the wear degree exceeds limit. Figure 2-17 Standard thickness: 8.0mm; Minimum thickness: 2.0mm

(5) Conduct visual inspection on the inner surface of brake drum for damage and uneven wear. Then grind the brake drum for correction purpose and replace it if it can’t be corrected.

Standard value: 314mm; Maximum value: 316mm. See Figure 2-19

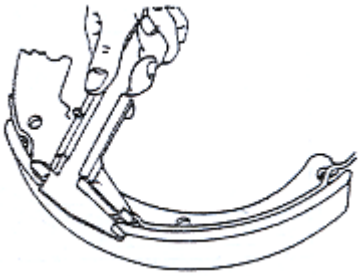

Figure 2-18

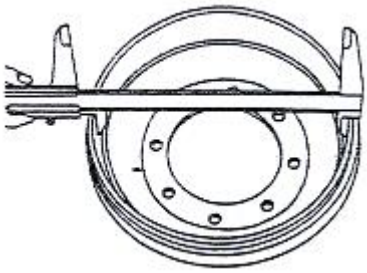

Figure 2-19

2.6.3 Brake assembly

(1) Coat the cup and piston on the brake cylinder with brake fluid and assemble the spring, piston cup, piston and protection loop in sequence.

(2) Mount brake cylinder on the brake backing plate.

(3) Mount the brake backing plate on the drive axle.

(4) Coat all the positions as shown in Figure 2-20 with heat-resistant grease,

and be careful not to smear any oil on the friction disk.

(a) Contact surface of the brake backing plate and brake shoe;

(b) Fixed pin;

(c) Contact surface of the brake shoe and spring compression base;

(d) Support pin of the hand brake lever;

(e)Threads on the regulating mechanism and other rotating parts.

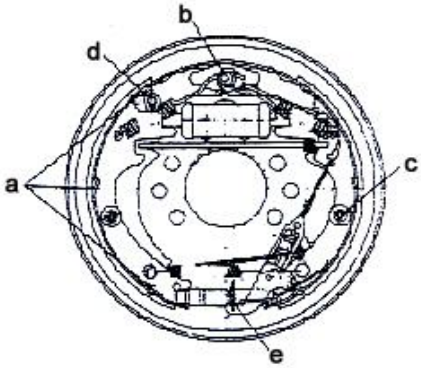

Figure 2-20

(5) Use a E-shape retaining ring to seize the parking brake cable.

(6) Mount the brake shoe with a fixed spring. See figure 2-21

(7) Mount the compression spring on the push lever of hand brake, and then mount the push lever onto the brake shoe.

See figure 2-22

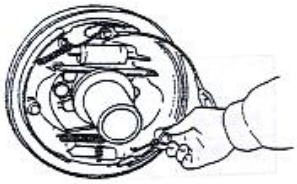

Figure 2-21

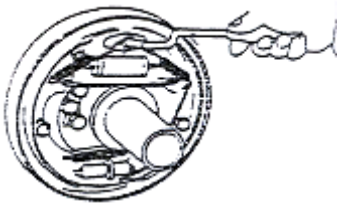

Figure 2-22

(8) Mount the brake shoe guide plate to the support pin, and then mount the return spring of the brake shoe. First install the main shoe and then install the auxiliary shoe. See figure 2-23

(9) Mount the regulator, the regulator spring, ejector Pin, return spring of the ejector Pin. The following points shall be noted:

(a) The screw direction and mounting direction of the regulator;

(b) The direction of spring in the regulator (contact between regulator gear and spring is not allowed);

(c) The direction of return spring in the ejector pin (the spring hook at the support pin side should be fixed at the side opposite to the ejector pin);

(d) The lower end of the adjustment lever must contact with the regulator gear.

(10) Connect the brake pipelines with the wheel cylinders.

(11) Measure the inner diameter of brake drum and outer diameter of brake shoe, and then use the regulator to set the difference between inner diameter of brake drum and outer diameter of brake shoe at 0.3mm-0.5mm. See figure 2-24

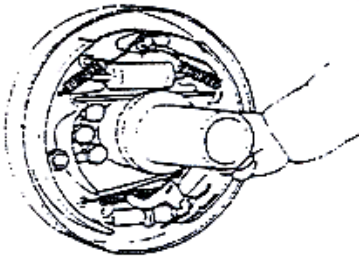

Figure 2-23

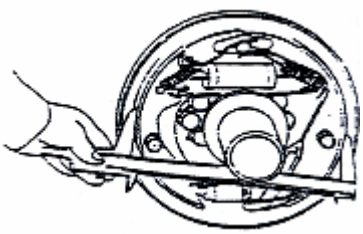

Figure 2-24

2.6.4 Operation test of the automatic clearance regulator as shown in Figure 2-25

(1) First, adjust the diameter of brake shoe to be close to the stipulated installation size; pull the lever to rotate the regulator. When letting the lever go, the regulator lever will return to its original position and the regulator gear won't rotate.

Note: Even if the regulator gear and the lever both return after the lever is let go, the regulator still works properly.

(2) If the regulator can not finish the above actions when the lever is pulled, carry out the following checks:

(a) Securely mount the adjustment lever, ejector pin, spring of the ejector pin and compression spring base;

(b) Check the return spring on ejector pin and the regulator spring for damage,and then check the rotation of its regulator gear and its meshing parts to see if there is excessive wear or damage. Check whether the pin contacts with the gear. Replace damaged parts.

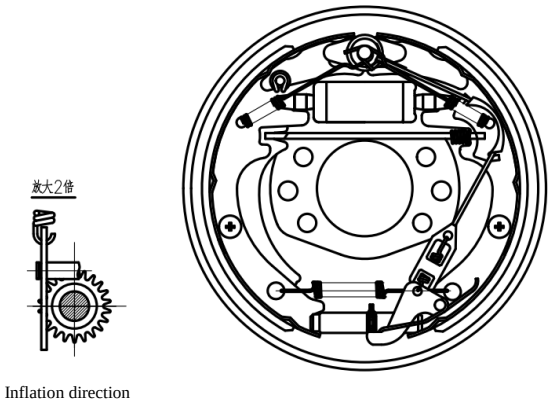

Figure 2-25

2.7 Adjusting the brake pedal as shown in Figure 2-26 (a)

(1) Shorten the push lever;

(2) Regulate the pedal spacing bolt and adjust the pedal height as shown in Figure 2-26 (b);

(3) Adjust the length of the push lever until its front end contacts with the piston of master cylinder. Then turn back 1-2 circles to guarantee a free travel of the pedal between the 10mm-20mm;

(4) Lock the nuts of push lever and the pedal spacing bolt.

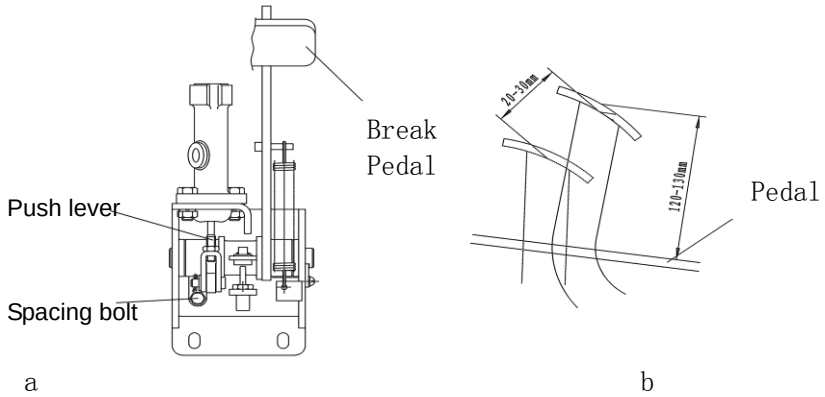

Figure 2-26

(5) Adjust the brake switch as shown in Figure 2-27

(a) After the height of the brake pedal has been adjusted, release the brake switch and lock the nut;

(b) Disconnect the plug to separate the wires;

(c) Rotate the switch to set the gap A at 1mm;

(d) Make sure the brake light be lit when depressing the brake pedal;

(e) Finally lock the nuts.

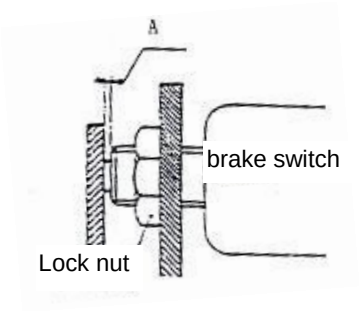

Figure 227 Brake light switch

2.8 Troubleshooting and Failure Analysis(Table 2-3)

(Table 2-3)

Problems	Causes analysis	Solutions
Abnormal braking	1.Oil leaks in the brake system	Repair it
	2 The brake shoe clearance is not well-tuned	Adjust the regulator
	3 The brake is over-heated	Check if the brake is slipping
	4 Brake drum and friction disk are not appropriately contacted	Readjust it
	5 There are foreign matters attached to the friction disk.	Repair or replace it
	6 The brake fluid is contaminated	Check the brake fluid
	7 The brake pedal (micro-valve) hasn't been adjusted properly	Adjustment
Noise in the brake	1 The friction surface is hardened or with foreign matters attached on it	Repair or replace it
	2 The baking plate is deformed or the bolts are loosen	Repair or replace it
	3 The brake shoe is deformed or is not installed correctly	Repair or replace it
	4 Worn friction disk	Replace
	5 The wheel bearing is loosened	Repair or replace it
The	1 There are oil stain on the friction disk	Repair or replace it

braking is uneven	2 The brake shoe clearance is not well-tuned	Adjust the regulator
	3 The wheel cylinder fails	Repair or replace it
	4 The return spring of brake shoe is damaged	Replace
	5 The brake drum is deflected	Repair or replace it
The braking is not enough	1.Oil leaks in the brake system	Repair or replace it
	2 The brake shoe clearance is not well-tuned	Adjust the regulator
	3 Air is mixed within the brake system	Let out the air
	4 The brake pedal is not adjusted appropriately	Readjust it

2.9 Care and maintenance

① Before conducting running-in test of a new drive axle, users shall fill in gear oil (gear oil shall be selected in accordance with the instructions. Please refer to Table 2-1 for the specific requirements). Fill oil into the hole at top of the axle shell until oil is spilled out of the oil level hole in central axle.

② The thickness of friction disk on brake shoe is 8mm. The minimum thickness allowed is 2mm. These two are key components of the braking system and should be checked monthly. If excessive wear is found, the components shall be timely replaced to avoid accidents.

③ Technical maintenance after each 50h:

Ⅰ. Change the gear oil if a new axle has been working for 50h along with the forklift. Clean the axle before refilling new oil.

Ⅱ. Check all the fasteners. If any looseness is found, tighten it immediately.

Ⅲ. Check the wheel axle and wheel hub connection for any oil leakage. Re-apply sealant if any leakage is found.

④ Monthly technical maintenance:

Ⅰ. Check the brake drum for any destructive wear.

Ⅱ. Check the wear condition of brake shoe. If wearing is so serious that the brake shoe fails to meet requirements, the brake shoe should be replaced immediately.

Ⅲ. Check if the oil level in axle shell meets standards. If the oil level reduces, users should promptly fill up.

⑤ Semi-annual technical maintenance: Change the gear oil within the axle once every six months of working.

⑥ Annual technical maintenance: Disassemble the drive axle for inspection every year.

⑦ Check and debug requirements during the installation process:

When re-installing the wheel hub of the drive axle, users should regulate the clearance adjuster of the brake, so as to set the gap between brake drum and friction disk at 0.3mm ~ 0.5mm. Fill 100ml 3# lithium base grease into the tapered roller bearing on the wheel hub.

Adjustment of the bearing clearance on wheel hub: tighten the inner locking nut until the wheel brake drum can barely turn up. Then rotate the inner locking nut in reverse for 1 / 8 circle. At

this moment wheel brake drum can be freely rotated without jamming, significant axial clearance or deflection. Finally, assemble the washer pad and tighten the outside locking nut.

3. Steering system

3.1 Overview

The steering system (Figure 2-28) mainly consists of the steering wheel, steering shaft, steering gear, Hydraulic cycloid motor and Rotary bearing. The steering shaft is connected with steering gear through gimbal joints, while the connecting shaft is connected with steering wheel through gimbal joints. The steering column can tilt backwards or forwards to an appropriate position. The Rotary bearing is bolted to the tailstock on the frame rear end. The Hydraulic cycloid motor will push the Driving wheel through the gear, so that the steering wheel will deflect to achieve steering.

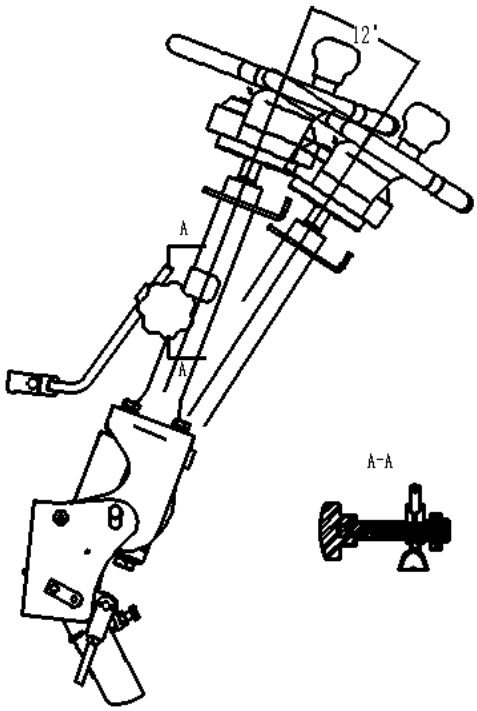

Fig. 2-28 Steering device

3.2 Cycloidal full hydraulic steering gear

The hydraulic steering gear (Figure 2-29) can, according to the rotation angle of the steering wheel, transmit the oil from steering pump to the steering cylinder through the oil pipeline. When the pump can not supply oil, the operator can rotate it manually.

The steering gear is composed of a general steering and a combination valve, on which there is a hole serving as the safety valve of the system. Within the valve, there is a two-way overload valve, which could protect the parts from unexpected damage. If accident external shocks cause high pressure within the hydraulic system during the driving process of the forklift. The safety valve and two-way overload valve has been tuned up by the manufacturer and users should not adjust it

without permmision.

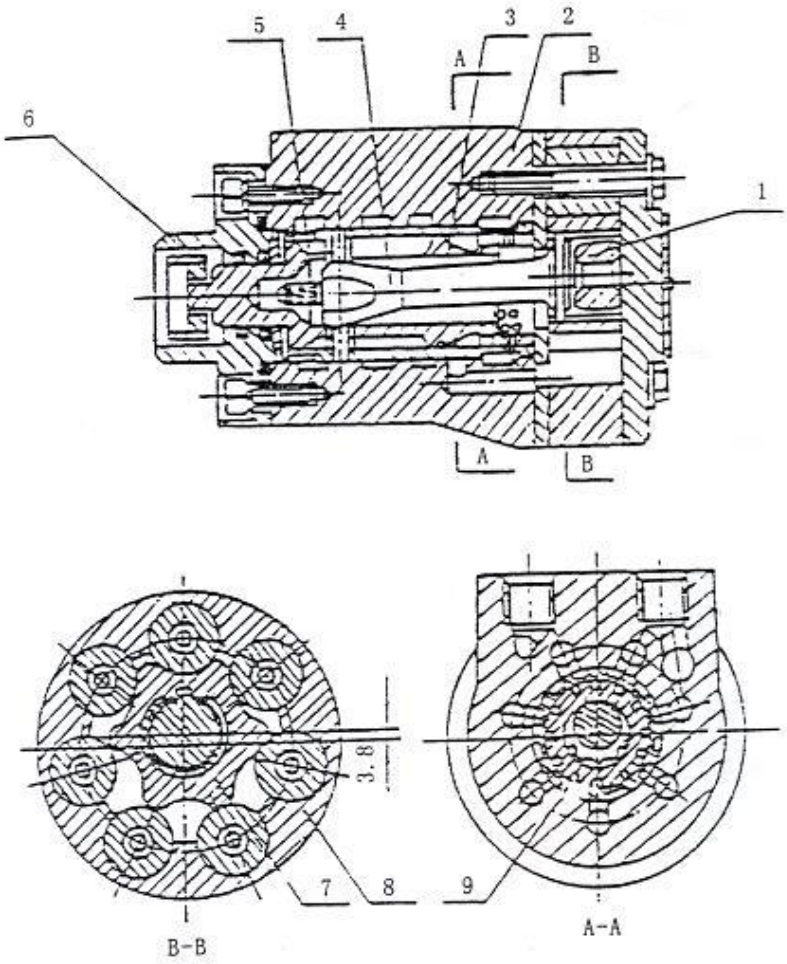

1. Limitation column 4. Couple shaft 7.Rotor
2.Valve body 5.Spring 8.Stator
3. Valve core 6.Connection block 9.Valve sleeve

Figure 2-29 Cycloidal full hydraulic steering gear

3.3 hydraulic cycloid motor and rotary bearings

The pinion gear under the hydraulic cycloid motor is meshed with the large gear on the transmission case (as shown in Fig . 2 - 30) to drive the steering wheel on the gearbox to realize steering .

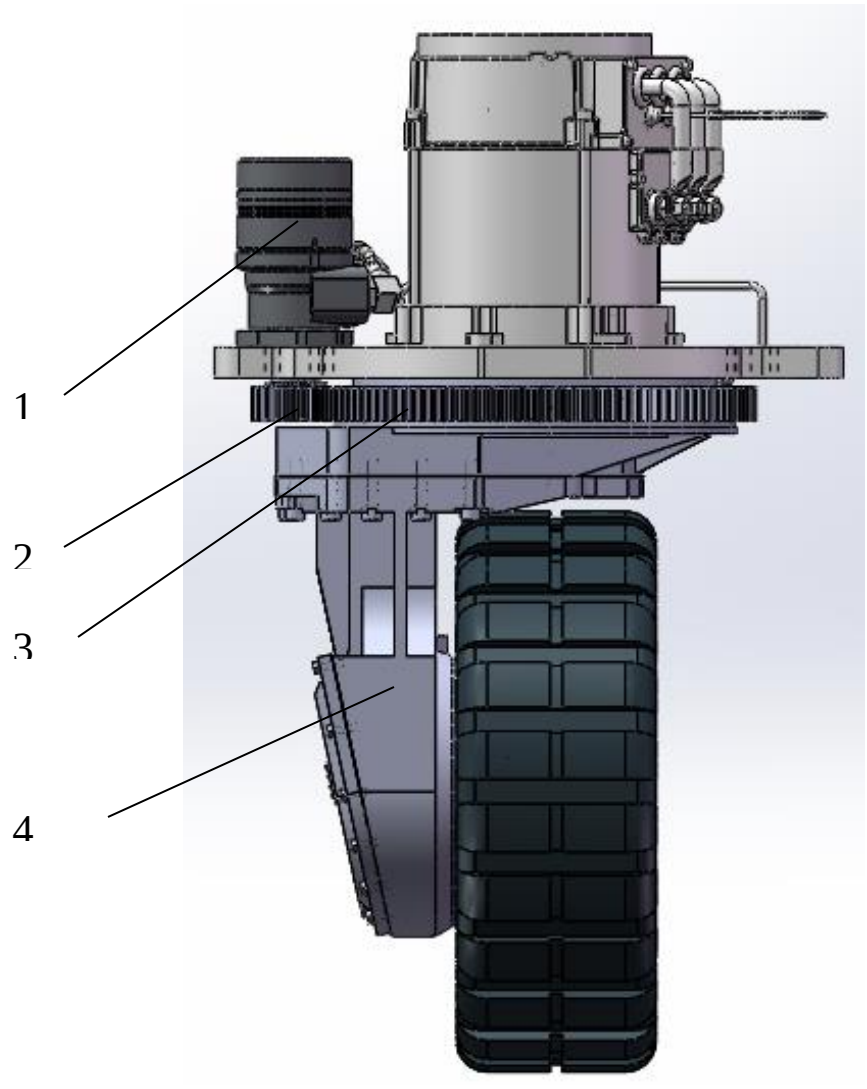

1. gerotor motor 2. pinion 3. big gear wheel 4. gear-box

Figure 2-30 hydraulic cycloid motor and rotary bearings

3.4 Check the steering system after reinstalling

(1) Turn the steering wheel leftwards and rightwards to the maximum extent to see whether the rotation is uniform and smooth;

(2) Check if the layout of hydraulic piping is correct and if the left and right steering are mounted reversely;

(3) Jack up rear wheels and slowly rotate the steering wheel leftwards and rightwards for several times to remove air in the hydraulic pipelines and oil cylinder.

3.5 Failure analysis (Table 2-4)
(Table 2-4)

Problems	Causes analysis	Solutions
The steering wheel gets stuck	The oil pump is damaged or faulted	Replace
	The rubber hose or fitting is damaged or the pipe is blocked	Replace or clean it
The steering wheel is heavy	The pressure of the safety valve is too low	Adjust the pressure
	There is air in the oil pipeline	Remove the air
	The reset function of steering gear fails. Positioning spring is broken or lacks elasticity	Replace the spring
	The inner leakage of steering cylinder is too large	Check the piston seal
The forklift moves unsteadily or in a snake-like manner	The spring is broken or lose elasticity	Replace
It is noisy when the forklift is working	The oil level in the oil tank is low	Add oil
	The inlet tube or filter is blocked	Replace or clean it
Oil leakage	Guide sleeve seal of the steering cylinder is damaged, or the joint or pipelines are damaged.	Replace

(4) Electrical System

Electrical system of FE3D is powered by 48V battery set, .traction power of the truck is powered by AC motor，lifting power is produced when AC motor is driving the oil pump to produce oil pressure. Lighting system is powered by battery 48Vto 24V voltage.

4.1 Electric control assembly（Curtis）

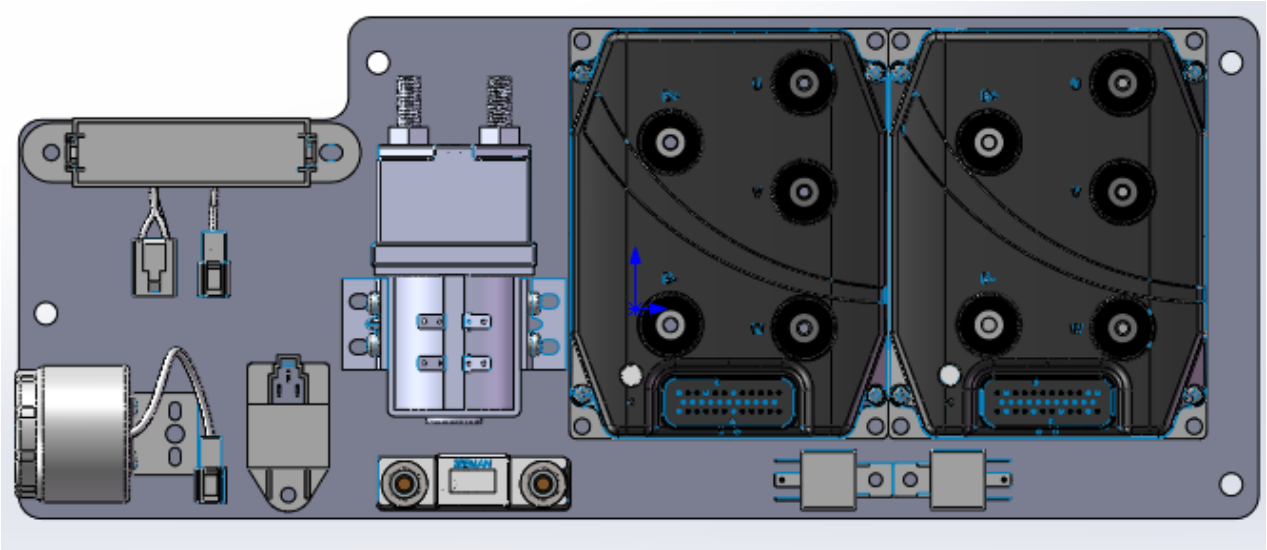

(Figure4-1)

Forklift traction is AC variable-frequency motor, steering is AC variable-frequency motor controller, the dashboard display screen and AC drives adopes products from Curtis, the world's leading supplier of electric vehicle system in the United States. The adopted AC variable-frequency motor is high efficient, durable and maintenance free, basically because it has no DC motor commutator (commutator can limit the acceleration performance of truck, especially in high speed situation, it will limit braking torque), so its accelerating ability is faster. Controller is used for ecectric truck which use CANopen protocol controller for communication, through its analog and digital I/O and communications devices, it is very suitable for management of forklift movement, I/O operation, control and information display, it can discharge of battery monitoring, with all kinds of protection function. Dashboard display can show many data, undertake factory or user setting, can input multiple functions such as user commands.

4.1.1Electrical principle chate （Figure4-2)

https://truckmanualshub.com/

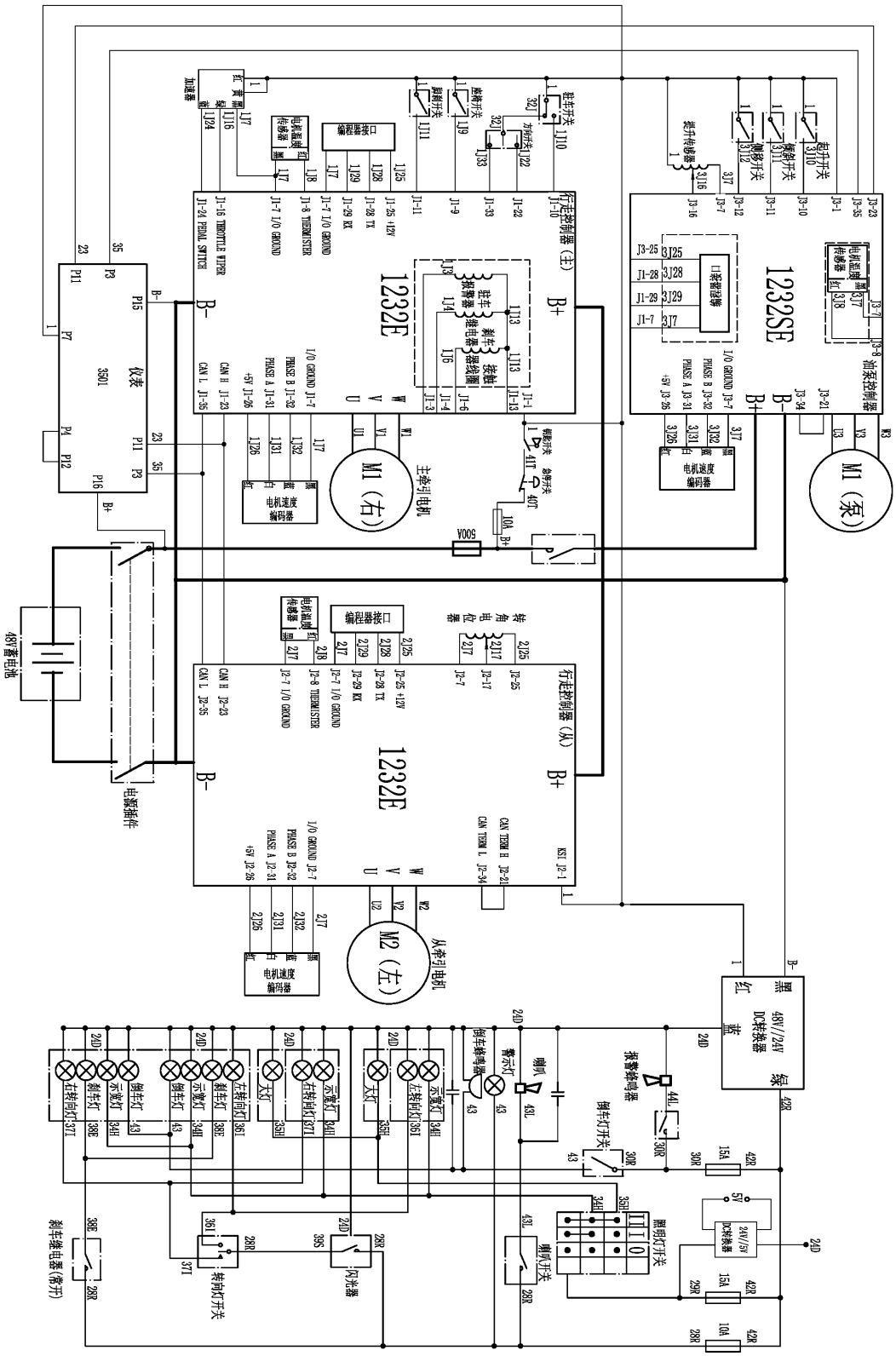

（Figure 4-2）

4.1.2 Main functions and settings

Safe and high efficient working performance and complete operating performance of electric forklift can be achieved by setting correctly each motor technique data and control technique data and function value of controller.

1. The creeping speed of electric forklift can be set,the electric forklift work for a long time under a low speed,through creeping speed seting function of controller.

2、Acceleration can be set. Acceleration is the sense of softness or hardness of accelerating padal when operating electric forklift. By setting rate of rate,forklift can meet the need of accelerating operation under different working condition.

3、Plug braking and regenerative braking. In the course of travelling,there appears,when reversing direction rod,plug brake signal which,through the controlling of motor driver to pulling motor,presents a brake moment so as to brake the vehicle.The amount of brake power can be controlled by accelerating pedal. A proper setting of maximum brake power can ensure to brake electric forklift smoothly under different speed.Regenerative brake is,under the condition that the vehicle speed is higher than the rated value of accelerating pedal,generated by the controlling of controller. The brake power can transfer to electric power and present back to battery.Especially when the vehicle is coasting downwards slop,in order to properly reduce the speed,regenerative brake can be achieved by properly releasing the accelerating pedal.The presenting back of electric power to battery prolongs the one-charge-travelling distance of it.

4、Function of backward slip preventation on slope,when the vehicle is stopped on slope,it will slip downward the slop acceleratedly if hand brake or food brake pedal is released. The function of backward slip preventation can prevent the phenomenon of slipping downward acceleratedly and ensure that electric forklift slips downward uniformly with a low speed.

5、The maximum travelling speed can be set.The setting of the maximum travelling speed of electric forklift can prevent pulling motor from overloading caused by excessive vehicle speed.

6、Shut down static recovery,controlling device will be shut down if seat swith or ignition key is off..Only when the direction controlling rod is switched to neutral position can the vehicle be restarted.That is to say,if the driver leaves vehicle at any time and returns back to it,it is necessary to switch the direction controlling rod to neutral position to restart. This function can prevent unexpected insecurity. There is two seconds of time delay at the input end of seat switch,which allows seat switch can be off in trashing.

7、Safety protection function.When the power element in controller is damaged in vehicle travelling,the controller will cut off main contactor as quickly as possible.When the temperature ascending speed of controller is too high,the controller will automatically limit the armature current of motor. And when the battery voltage is too low,the controller will stop working to keep safe.

8、There is self-diagnose function in pulling motor controller and oil pump motor controller.Once malfunction occurs in the working of controller,there will display malfunction code in indicating instrument,which will stop the controller from working to ensure the safety of operating system.

9、Display instrument will show battery power and the cumulative working hours.

4.2.3、Maintenance of circuit system

(1)、Check the contact wear condition; replace the contact if it’s worn and the contact should be checked every three months.

(2)、Check the pedal and tiller micro switch; Measuring the voltage drop at the ends of the micro switch, there is no resistance when the micro switch micro open closure should be without resistance, when released should have a clear voice.Check once every three months.

(3)、 Check the main circuit: battery- controller- connecting cable of the motor. To ensure that the cable insulation is good, the clamp circuit connection is fixed. Check once every three months.

(4)、Check the pedal mechanical movement to see whether the spring will deform, whether

potentiometer spring can stretch out or draw back to the maximum level or setted levels.Check once every three months.

(5)、Check the contactor mechanical movement, the contactor should move freely without adhesion, mechanical movements of the contactor shall be inspected once every 3 months.

4.1.4 Combination instrument

Using new combination instrument, the main function is to realize auxiliary control and provide the vehicle display interface to the driver. It is composed of control circuit, the cumulative time counter (liquid crystal display), battery meter, fault code display and other circuit. Based on the current electric car demand, this instrument have new design in the control circuit and display form, which can provide drivers intuitive vehicle state information. This instrument has many advantages, such as compact structure, beautiful outline, high automatic degree and reliable quality.

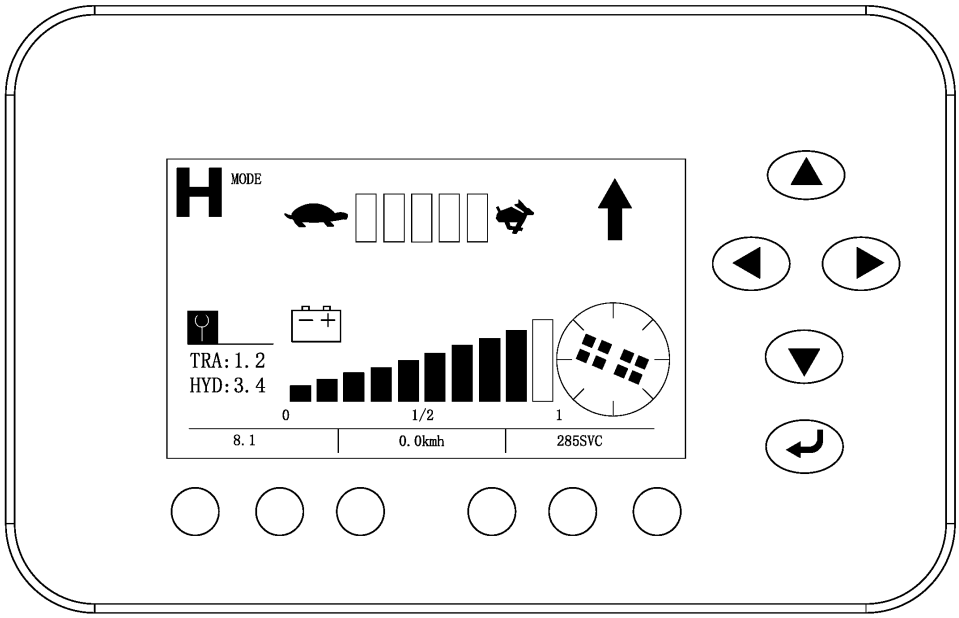

Figure 4-3 CURTIS instrument

1）、“TRVAL”means the situation of traction controller, digital code indicates controller failure, specific code please refer to 4.4 failure analysis.

2）、“HYD”means situation of pump controller, digital code indicates controller failure, specific code please refer to 4.4 failure analysis.

3）、the letter on the upper left means truck operating mode:“H”means high efficiency mode；“S”means normal mode；“E”means economic mode，press button to switch mode.

4）、Adjustment of instrument internal parameter is finished before leaving the factory, contact the after-sales department if someone wants to change it.

4.1.5 Failure analysis

1232SE/1234SE Controller fault table and diagnostics guide

Code display on the programmer	Code display on the instrument	Troubleshoot	Fault cause
Controller Overcurrent	1.2	controllercurrentoverload	1、motor outside U,V or Wconnection shour current 2、motor parameter mismatching 3、controller failure
Current Sensor Fault	1.3	Current sensor failure	1，motor U、V、W truck circuit，lead to current leakage 2，controller failure
Precharge Failed	1.4	Precharge failure	1，battery can’t chagge
Controller Severe Undertemp	1.5	Controller temperature too low	1，The controller working environment is too harsh
Controller Severe Overtemp	1.6	Controller temperature too high	1，The controller working environment is too harsh 2，truck overloaded 3，the controller is wrongly assembled
Severe Undervoltage	1.7	Voltage too low	1， battery parameter is wrongly setted 2， non controller system power consumption 3， The battery impedance is too large 4， battery connection is disconnected 5，the fuse is disconnected, or main contactor is not connected
Severe Overvoltage	1.8	Voltage too high	1，Battery parameter is wrongly setted 2，The battery impedance is too large 3，Regenerative braking when the battery connection is disconnected
Controller Overtemp Cutback	2.2	Controller temperature too high, as a result the performance is not good	1, The controller working environment is too harsh 2，truck overloaded 3，the controller is wrongly assembled

Undervoltage Cutback	2.3	Voltage too low, as a result the performance is not good	1， battery power is insufficient 2， Battery parameter is wrongly setted 3， non controller system power consumption 4， The battery impedance is too large 5， battery connection is disconnected 6， the fuse is disconnected, or main contactor is not connected
Overvoltage Cutback	2.4	Voltage too high, as a result the performance is not good	1， during the process of regenerative braking, regenerative braking current lead the battery voltage to rise 2， Battery parameter is wrongly setted 3， The battery impedance is too large 4， when regenerative braking
+5V Supply Failure	2.5	Controller output 5v, poer supply failre	1， external load impedance is too low
Digital Out 6 Failure	2.6	Drive 6 output overcurrent	1， external load impedance is too low
Digital Out 7 Overcurrent	2.7	Drive 7 output overcurrent	1， external load impedance is too low
Motor Temp Hot Cutback	2.8	The motor is too hot, as a result the performance is not good	1，The motor temperature reach or above the setted program alert temperature, lead the current output to reduce 2，motor temperature parameter is wrongly setted 3， If the motor has not used the temperature sensor, programming parameters “Tempcompensation”and“Temp cutback”must be setted“OFF”。
Motor Temp Sensor Fault2.9	2.9	Motor temperature sensor failure	1， Motor temperature sensor is wrongly connecttedly 2， If the motor has not used the temperature sensor, parameter programming“MotorTemp Sensor Enable”must be setted“OFF”
Coil 1 Driver Open/Short	3.1	Drive 1 output linkng coil is open circuit or short circuit	1， connected load is open circuit or short circuit 2， connecting pin is stained 3， wrong wiring

Main Open/Short	3.1	Main contactor coil is open circuit or short circuit	1， connected load is open circuit or short circuit 2， connecting pin is stained 3， wrong wiring
Coil2 Driver Open/Short3.3	3.2	Drive 2 output linkng coil is open circuit or short circuit	1. connected load is open circuit or short circuit 2. connecting pin is stained 3. wrong wiring
EMBrake Open/Short	3.2	Electromagnetic brake coil is open circuit or short circuit	1， connected load is open circuit or short circuit 2， connecting pin is stained 3， wrong wiring
Coil3 Driver Open/Short	3.3	Drive 3 output linkng coil is open circuit or short circuit	1，connected load is open circuit or short circuit 2， connecting pin is stained 3， wrong wiring
Coil4 Driver Open/Short	3.4	Drive 4 output linkng coil is open circuit or short circuit	1，connected load is open circuit or short circuit 2， connecting pin is stained 3，wrong wiring
PD Open/Short	3.5	Proportional driving is open circuit or short circuit	1， connected load is open circuit or short circuit 2， connecting pin is stained 3， wrong wiring
Encoder Fault	3.6	Encoder failure	1，motor encoder is failure 2， wrong wiring
Motor Open	3.7	Motor is open corcuit	1， motor phase 2， wrong wiring
Main Contactor Welded	3.8	Main contactor adhesions	1， Main contactor contact welding 2， motor U or V disconnected or default phase 3，circuit that connecting B+ terminal will electricize the battery
Main Contactor Did Not Close	3.9	Main contactor is not closed	1， main contactor is not closed 2，Main contactor pin is oxydic, melted, or not stable when connected 3， external device electricize the battery 4， fuse is disconnected
Throttle Wiper High	4.1	Accelerator output is high	1，accelerator and potentiometer output voltage is too high
Throttle Wiper Low	4.2	Accelerator output is low	1，accelerator and potentiometer output voltage is too low
Pot2 Wiper High	4.3	potentiometer 2 output is too high	1，potentiometer 2 output voltage is too high
Pot2 Wiper Low	4.4	potentiometer 2 output is too low	1，potentiometer 2 output voltage is too low

Pot Low Overcurrent	4.5	potentiometer current is too low	1，potentiometer impedance is too low
EEPROM Failure	4.6	EEPROM failure	1，EEPROM storage failure
HPD/Sequencing Fault	4.7	High pedal protection /operation order failure	1，The key start, interlock, direction, and the accelerator input order is wrongly setted. 2， Wiring, switch key, interlock, direction, or accelerator input failure
Emer Rev HPD	4.7	Emergenvy reverse high pedal protection	1，Emergency reverse operation is over, but the forward, reverse input and interlock of the accelerator are not resetted
Parameter Change Fault	4.9	Parameter change failure/wrong	1，In order to ensure the safety of the truck, some specific parameter changes must come into force after the key switch is restarted
OEM Faults	5.1-6.7	OEM failure（custom failure	1，The user can define by themself the fault, use VCL code to note.
VCL Run Time Error	6.8	VCL running time is wrong	1，VCL code running time is overtime
External Supply Out of Range	6.9	External battery output is out og range	1， external loading is between 5V and 12V , battery current is too big or too small 2， in the“inspection menu (CheckingMenu)”, parameter is wrong, such as “ExtSupply Max”,“Ext Supply Min”
OS General	7.1	Operation system failure	1，internial controller failure
PDO Timeout	7.2	PDO overtime	1，CAN PDO information reception time exceeds PDOtime limition
Stall Detected	7.3	Motor stalling	1， Motor stalling 2， motor encoder failure 3， wrong connection 4， input motor encoder battery failure

Motor Characterization Fault	8.7	Motor matching failure	1， In the process of motor matching, code contrast：0=normal 1=The controller receives the encoder signal, but impulse quantity is undefined.Please manually set pulse value 2=motor temperature sensor failure 3= motor high temperature response failure 4=motor overheating response failure 5= motor low temperature sensor failure 6=low voltage response failure 7=high pressure response failure 8= Controller cannot detect the encoder signal, channel signals disappears 9= Motor parameter settings exceed the scope
Motor Type Fault	8.9	Motor type failure	1，motor type（Motor_Type）parameters exceed the scope
VLC/OS Mismatch	9.1	VCL/OS not matched	1，VCL and OS of the controller program are not matching
EM Brake Failed to Set	9.2	Electromagnetic setting failure	1， the truck still not move after the electromagnetic brake command is setted. 2， Electromagnetic brake braking force is too small
Encoder LOS (Limited Operating Strategy)	9.3	Encoder operation is limited	1，Because motor blocked or encoder failure, the limited operating state is activated 2， wrong wiring 3， truck stall
Emer Rev Timeout	9.4	Emergency reverse response time is overtime	1， because EMR Timer expires, so the emergency switch is actiated overtime 2， emergent reverse switch has been on the “on” position all the time
Illegal Model Number	9.5	Controller type is wrong	1， controller moder can recognize 2，software and hardware type are not matching 3， controller is damaged

4.2 Electronic control assembly（Inmotion）

The Inmotion controller of ACS AC controller in the Zapi group, the type of controller of high security, reliability, flexibility, convenient operation and a body, through the advanced control software to ensure the motor in different modes, running smoothly, including regenerative braking speed and large torque condition, zero speed and torque control input / output port and proprietary software, ensure the controller for the economy and efficiency of electromagnetic brake and hydraulic control system.

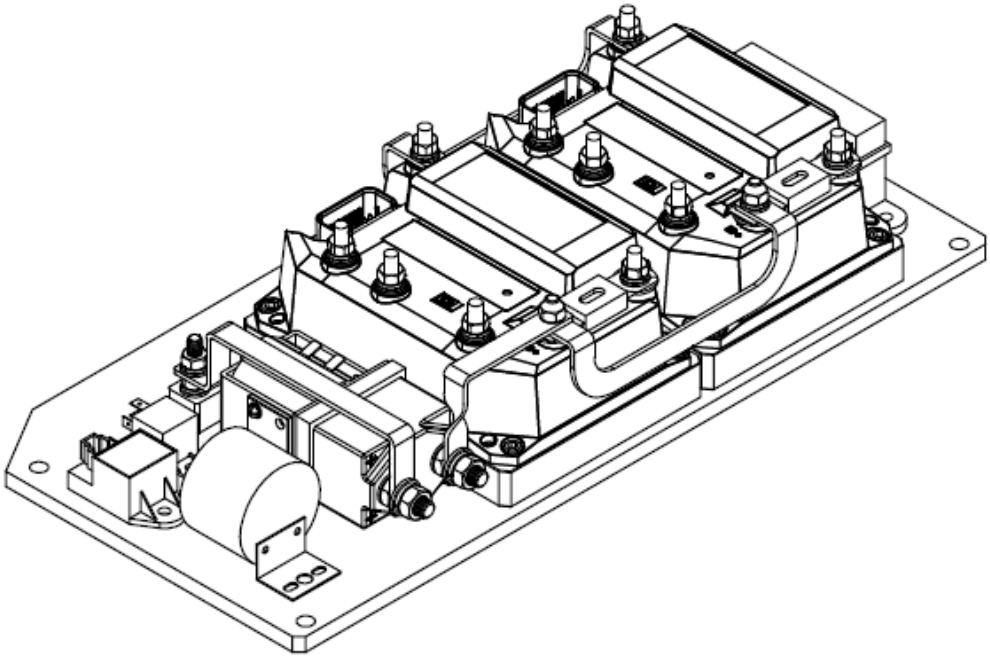

（Figure4－4）

Forklift traction AC frequency conversion motor, steering AC frequency conversion motor controller, dashboard display. Ac drivers are the world's leading suppliers of electric vehicle systems under the Zapi Group products. The selection of AC frequency conversion motor efficient durable and basically maintenance-free. Because it does not have a DC motor commutator (the commutator limits the acceleration of the vehicle, especially when the vehicle is moving at high speed and also limits the braking torque). The controller is a general controller for electric vehicles that communicates with the CANopen protocol through its analog and digital I / O and communication devices. Very suitable for managing forklift motion I / O, operation control and information display, it can carry out battery battery discharge monitoring, with a variety of protection functions. Dashboard display can be used for a variety of data display. Can be factory or user settings, can enter user commands and other functions.

4.2.1 Electrical principle chate（Figure4－5）

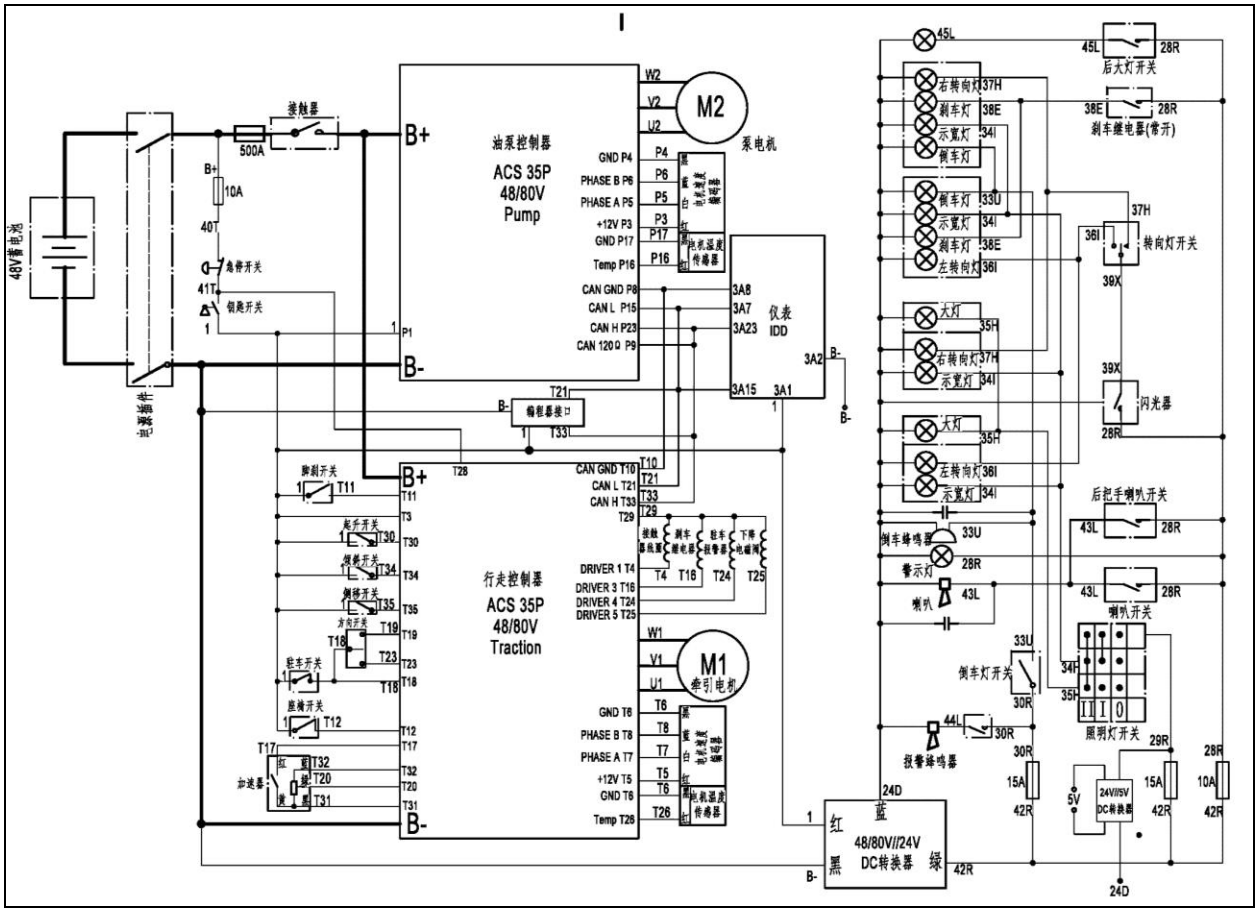

（Figure4－5）

4.2.2 Main functions and settings

By correctly setting the motor's technical parameters and control technology parameters and function values of the controller, the electric forklift's safety and high efficiency performance and complete operation function can be realized.

1, advanced design and production process to ensure the best quality and reliability.

2, a powerful ARM core processor and operating system, while meeting functional tasks and motor control requirements.

3, reverse braking and regenerative braking. In the vehicle, when the steering rod reverse, reverse braking signal is generated, it through the motor drive control of traction motor is given a braking torque, in order to achieve the purpose of deceleration of the vehicle. The braking force is controlled by the accelerator pedal. Regenerative braking is the relative speed of vehicle higher traction motor speed conditions produced by the control of the controller, the braking energy can be converted into electrical energy back to the battery. Especially the electric forklift on the ramp down sliding slope, in order to properly reduce the vehicle speed to slip down slope, through appropriate lifting the accelerator pedal, achieve regeneration a brake, extending the battery charging mileage.

4, the ramp function. The backward slip preventing electric forklift AC traction motor has excellent function decline on the ramp.

5. The maximum speed of electric forklift can be adjusted. The reasonable setting of the maximum speed of electric forklift can prevent overloading of traction motor due to excessive speed.

6, static return off. If seat switch or key switch is disconnected, the control device is turned off. The direction control rod must be brought back into the middle space to restart. If the driver leaves the vehicle and returns at any time. This function prevents unexpected unsafe operations from

occurring. There is a time delay of several seconds at the input end of the seat switch. To allow the seat switch to be temporarily disconnected in the event of a jolt.

7. Safety protection function. If the power component of the controller is damaged in operation, the controller will disconnect the main contactor in the shortest time; When the temperature rise of the controller is too high, the controller will automatically limit the armature current of the motor. When the battery voltage is too low, the controller stops working for safety.

8. The traction motor controller and the oil pump motor controller both have the function of self-diagnosis. In the process of operation, the controller will display the fault code on the display instrument once it has a fault, and automatically make the controller stop working. To ensure the security of the operating system.

9, display meter will show battery power and accumulative hours of work and remote vehicle management mode.

4.2.3 Maintenance of Circuit system

(1) Check contact wear condition; replace contact when it has worn. Contact contact should be checked once every 3 months.

(2) Check pedal or handle fretting switch; measure voltage drop at both ends of fretting switch, no resistance when fretting and closing, clear sound when released. Check every 3 months.

(3) Check main circuit: battery-controller-motor connection cable. Ensure cable insulation is good and circuit connection fastens. Check every three months.

(4) Check the mechanical movement of the pedal. See if the spring can deform normally, and whether the potentiometer spring can reach the maximum level or set level. Check every three months.

(5) Check the mechanical movement of the contactor; should move freely and without adhesion, the mechanical movement of the contactor should be checked every 3 months.

4.2.4 Combination Instrument

IDD is a vehicle-mounted instrument based on CAN and wireless communication, which can display vehicle speed, working time, battery power, Chinese and English display, password protection, fault code and other information. At the same time, it can realize remote voice alarm and scheduling, vehicle positioning, remote locking, remote help and other industrial Internet functions. It can also modify the configuration parameters according to users, and provide online real-time communication. Cloud data storage and background monitoring service. IDD has the advantages of instant communication, accurate positioning, high visualization and so on. It is the best terminal for future Internet of things and cloud service of electric forklift. Widely used in all kinds of industrial electric vehicles.

(Figure4-6) IDD Instrument

No.	Parameter name	Adjectival Description
①	hourmeter	The figure shows the current accumulated working time of the vehicle 5 digits display; After the key switch is connected to the power supply vehicle, the working timer starts to work;
②	Wheel angle indication	The arrow represents the direction of the steering wheel;
③	Working mode indication	Display the current mode of work，“**S**（tortoise speed）”、“**P**”、“**E**” 3 working mode
④	Speed display	Display current vehicle speed, unit KM/h or MPH, (shortcut key 4 switching unit)
⑤	Battery Life	Displays the current battery power icon, 10 cells, and the battery power comparison table 1.5.1
⑥	Real - time day of day	Display real-time of the day: time-minutes-seconds
⑦	MicroSD card indication	Display this icon when there is a MicroSD card in the instrument
⑧	GPRS signal indication	Display this icon when the meter communicates normally with the carrier base station
⑨	WiFi signal indication	This icon is displayed when WiFi is working properly in the instrument
⑩	GPS signal indication	This icon is displayed when the instrument receives valid positioning data
⑪	Walking speed display	Same as 4
⑫	Cumulative driving time	Shows the cumulative driving time of the vehicle, unit h
⑬	Traction working time	Displays the time for the towing ACS to work , unit h
⑭	Working time of pump	Show pump ACS working time, unit h

Keyboard Shortcuts

Icon	Name	Function
▲	Upward	Move the cursor up, or add 1 selected numbers up and up. Main interface down - cut high contrast
◀	Left	Move the cursor left
▶	Right	Move the cursor to the right
▼	Down	Move the cursor up, or subtract the selected number by 1 Lowering contrast under main Interface
↩	Cancel	Cancel the current content or return to the higher menu
OK	Enter	Confirm the current operation and enter menu mode under the main interface
0 ～ 9	Number	Modify the number of the selected cursor

2		Number 2	Switch to mode at main interface"S、P、E"
3		Number 3	Switching between the main interface and the secondary interface
4		Number 4	Speed unit KM/h and MPH unit switching

4.2.5 Fault analysis

ACS Controller fault table and diagnostics guide

Code display on the programmer	Code display on the instrument	Troubleshoot	Fault cause
1	20	Incorrect start Accelerator pedal switch active before key on	Release pedal switch
2	21	Incorrect start Forward switch or reverse switch active before key on	Turn off the direction switch
3	22	Forward switch and reverse switch active at the same time	Direction switch fault
4	23	Throttle analog value out of range	Throttle fault or analog need to be calibrated
5	24	Throttle analog fault	
6	31	Traction controller CAN communication fault	Check CAN wire of controller and display
7	32	Battery voltage low	Need charge
8	34	CPU fault	Reset key
9	36	Incorrect start Tilt switch active before key on	Reset tilt switch
10	37	Incorrect start Side switch active before key on	Reset side switch
11	38	Incorrect start Attachment switch active before key on	Reset attachment switch
12	39	Incorrect start Tilt switch active before key on	Reset tilt switch
13	40	Lift analog value out of range	Lift analog fault or need to be calibrated
14	43	Steer analog value out of range	Steer analog fault or need to be calibrated
15	44	Traction controller speed protection	Vehicle speed is too high alarm ”

16	45	Traction controller encoder fault	1、 Traction controller encoder fault 2、Traction motor speed sensor connection wire is open
17	81	Traction controller temperature is low	Traction controller temperature is low alarm
18	82	Traction controller temperature is high	Traction controller temperature is high alarm
19	83	Traction controller temperature sensor fault	Traction controller temperature sensor fault
20	84	Traction motor temperature is low	1、 Traction motor temperature is low 2、 Traction motor temperature sensor is fault
21	85	Traction motor temperature is high	1、 Traction motor temperature is high 2、 Traction motor temperature sensor is fault
22	86	Traction motor tenperature sensor fault	1、 Traction motor temperature sensor is fault 2、Traction motor temperature sensor connection wire is open
23	87	Traction motor encoder fault	1、 Traction motor encoder fault 2、 Traction motor speed sensor connection wire is open
24	88	DC bus voltage of traction controller is high	1、 DC bus voltage high 2、 The ramp is too steep
25	89	DC bus voltage of traction controller is low	Need to charge or check power wiring
26	90	The default value of the traction controller is updated	Reset key
27	91	Traction drive limit	Battery low vehicle speed limit
28	97	Open drain of traction output open or short	Check the wire of open drain of traction output open or short
29	98	Traction controller over current or short	Check power wiring
30	101	Traction controller short	1、 Check power wiring 2、 Controller enable before contactor pull
31	102	Traction controller temperature is high cut back	Traction controller temperature is high need cool
32	103	Traction motor temperature is high cut back	1、 Traction motor temperature is high need cool 2、 Traction motor temperature sensor fault

33	104	Traction controller over current	1、 Vehicle overload or Mechanical clamping 2、Traction motor speed sensor fault
34	105	Traction controller precharge failed	Replace the pre charge resistance
35	110	DC bus voltage of traction controller is low cut back	Battery need charge
36	111	DC bus voltage of traction controller is high cut back	DC bus voltage of traction controller is high cut back
37	112	DC bus voltage of traction controller is high cut back(Hardware monitoring)	DC bus voltage of traction controller is high cut back(Hardware monitoring)
38	114	Internal power supply error	Traction motor temperature sensor or speed sensor connection wire is open
39	121	Pump controller temperature is low	Pump controller temperature is low alarm
40	122	Pump controller temperature is high	Pump controller temperature is high
41	123	Pump controller temperature sensor fault	Pump controller temperature sensor fault
42	124	Pump motor temperature is low	1、 Pump motor temperature is low 2、 Pump motor temperature sensor fault
43	125	Pump motor temperature is high	1、 Pump motor temperature is high 2、Pump motor temperature sensor fault
44	126	Pump motor temperature sensor fault	1、 Pump motor temperature sensor fault 2、Pump motor temperature sensor connection wire is open
45	127	Pump controller encoder fault	1、Pump motor speed sensor fault 2、Pump motor speed sensor connection wire is open
46	128	DC bus voltage of pump controller is high	DC bus voltage of pump controller is high
47	129	DC bus voltage of pump controller is low	Check power wiring
48	130	The default value of the pump controller is updated	Reset key
49	132	Pump drive limit	Battery voltage low need charge
50	137	Open drain of pump output open or short	Check the wire of open drain of pump output open or short
51	138	Pump controller over current or short	Check power wiring
52	141	Pump controller short	

53	142	Pump controller temperature is high cut back	
54	143	Pump motor temperature is high cut back	Pump motor temperature is high alarm
55	144	Pump controller current calibration error	Reset key
56	145	Pump controller precharge failed	Replace the pre charge resistance
57	150	DC bus voltage of pump controller is low cut back	DC bus voltage of pump controller is low cut back
58	151	DC bus voltage of pump controller is high cut back	DC bus voltage of pump controller is high cut back
59	152	DC bus voltage of pump controller is high cut back(Hardware monitoring)	DC bus voltage of pump controller is high cut back(Hardware monitoring)
60	153	Pump controller CPU fault	Reset key
61	154	Pump controller speed control fault	Pump controller speed control fault
62	157	BMS over temperature protection	BMS over temperature protection
63	158	BMS single body over discharge	BMS single body over discharge need charge
64	159	BMS over voltage protection	BMS over voltage protection
65	163	BMS over current	BMS over current
66	164	Charge protection	Charge protection
67	156	Temperature protection	Temperature protection
68	155	BMS CAN bus off	BMS CAN bus off
69	165	Seat switch off after a period of time, the direction of the request to reset	Reset direction switch
70	168	BMS indicates Limit Current alarm	BMS indicates Limit Current alarm
71	169	BMS indicates cutoff Current alarm	BMS indicates cutoff Current alarm
72	170	BMS indicates brake Current alarm	BMS indicates brake Current alarm
73	171	BMS CAN Error	BMS CAN Error
74	13	HPG CONTROLLER EEPROM KO	Reset key
75	30	HPG CONTROLLER BATTERY VOLTAGE LOW	HPG CONTROLLER BATTERY VOLTAGE LOW NEED CHARGE

76	33	DC MOTOR VOLTAGE HIGH	RESET KEY
77	49	DC MOTOR OPERATING CURRENT IS ZERO	HPG CONRTOLLER SENSOR FAULT
78	53	HPG CONRTOLLER OVER CURRENT	HPG CONRTOLLER OVER CURRENT
79	62	HPG CONTROLLER TEMPERATURE HIGH	HPG CONTROLLER TEMPERATURE HIGH NEED COOL
80	66	HPG CONTROLLER BATTERY LOW	HPG CONTROLLER BATTERY LOW NEED CHARGE
81	74	HPG CONTROLLER DRIVER SHORTED	HPG CONTROLLER DRIVER SHORTED
82	76	HPG CONTROLLER COIL SHORTED	HPG CONTROLLER COIL SHORTED
83	78	HPG CONTROLLER VACC NOT OK	HPG CONTROLLER VACC NOT OK
84	79	HPG CONTROLLER INCORRECT START	HPG CONTROLLER INCORRECT START
85	241	HPG CONTROLLER CAN BUS KO	CHECK CAN WIRE OPEN AND CAN SPEED RATE
86	242	HPG CONTROLLER BATTERY OVER VOLTAGE	HPG CONTROLLER BATTERY OVER VOLTAGE
87	243	KEYOFF SHORTED	Key switch adhesion (HPG DC pump control fault)
88	244	HPG CONTROLLER WATCHDOG ERROR	HPG CONTROLLER WATCHDOG ERROR
89	246	HPG CONTROLLER WAITING FOR MAIN CONTACTOR	TURN OFF THE PUMP CONCTACTOR PARAMETER
90	161	DISPLAY CAN FAULT	CHECK DISPLAY AND CONTROLLER CAN CONNECTION

5. Accumulator

Accumulator seen as figure 2-34

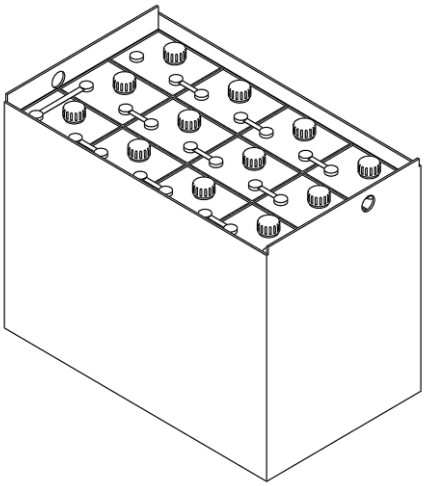

Figure 2-34 Accumulator

5.1 Accumulator safety precautions:

△ Appropriate ventilation measures shall be adopted because hydrogen and oxygen will be generated at the end of the accumulator charging process. If spark occur during the process, explosion may be caused.

△ Harmful acid mist will also be generated during charging. Remove the mist promptly after charging and clean up the accumulator and the charging place promptly.

△ Please wear protective glasses and rubber gloves when charging the accumulator as it contains sulfuric acid. Careless use may cause skin burns and loss of vision. If you splash electrolyte (acid) in your eyes or skin, immediately wash with plenty of water and visit a doctor for treatment. Electrolyte on clothes can be washed off with water.

△ People who are not familiar with the operating method of the accumulator and its dangerousness shall not use the accumulator, so as to avoid harm to personnel caused by the dilute sulfuric acid.

△ Never place any metal objects or tools on the accumulator to eliminate the danger of short-circuit.

△ Unplug the power connector of the accumulator only when power is fully turned off. Hot plugging is strictly prohibited.

△ Before installing the accumulator, please read the instruction manual carefully. After reading, please keep it with you for future reference.

5.2 Accumulator use precautions

Service life of the accumulator is generally 2 to 3 years, or even 4 years if it can be properly used and maintained. In case of the improper use and maintenance, it may suffer early damage in a few months since initial use.

During use of the accumulator, users should regularly check the electrolyte level and the remaining accumulator capacity. Recharge the accumulator if necessary. Accumulator maintenance is relatively simple, but requires patience and meticulousness. Timely supplementing and density control of the electrolyte as well as cleanup of accumulator and polarity terminals can effectively extend the service life of accumulator.

Check if there is water in the accumulator box and drain the water immediately if any.

In addition, the accumulator should not be stored with electrolyte in it. In case of short-term storage of a fully charged accumulator, please charge the it every month during the storage period to compensate for self-discharge of the accumulator, preventing vulcanization of accumulator plate or

eliminating minor vulcanization of the accumulator plates. Plus, users shall check the accumulator status frequently during the storage period.
If the accumulator is being used, please conduct a fully discharge together with a fully charge each month. This could help maintain accumulator capacity and avoid plate salvation.

Please keep the external surface of the accumulator clean.

Check the accumulator and the fixing status of wire leads. There should be no looseness.

Check the accumulator case for cracking and damage and then check the pole and lead chuck to see if they are burnt.

Wipe clean dust on the external surface of the accumulator with a cloth. If electrolyte overflows to the surface, please wipe with a cloth or rinse with hot water and wipe it dry with a cloth. Remove dirt and oxides on the post piling and wipe clean the external of lead cable and lead chuck. Unblock and clean up the vent on the filler cap. During the installation process, apply a thin layer of industrial Vaseline on the pole and lead chuck.

Check the accumulator fluid level:

Vertically insert a glass tube with a diameter of 6 ~ 8mm and length of 150mm into the filler until reaching the upper edge of the plate. Then press the upper end of the tube with thumb and clip out the glass tube with the index finger, middle finger and ring finger. The height of the electrolyte within the tube is the height of electrolyte above the plate accumulator surface, which should be 15-25mm. Finally, return the electrolyte to the original single-cell accumulator.

Add electrolyte

If the electrolyte level is too low, distilled water should be promptly added other than tap water, river water or well water, so as to avoid failure of self-discharge caused by impurities. Plus, do not add electrolyte, otherwise the electrolyte concentration will increase, shortening the accumulator life. Note that the electrolyte level can not be too high in order to prevent spill-over of the electrolyte during charging and discharging process that may cause short circuit. After adjusting the electrolyte level, charge the accumulator for 0.5 hours or more to well mix the added distilled water with the original electrolyte. Otherwise, the interal parts of the accumulator tend to be frozen in winter.

Check the electrolyte density

The electrolyte density varies with the different degree of accumulator charging and discharging. Drop of the electrolyte density is an indication of accumulator discharging. To measure the electrolyte density in each cell is a manifestation of the accumulator discharge level.

(1) Measurement method: Remove the liquid filler cap in the single cells in the accumulator, and draw the electrolyte from the liquid filler cap with a density meter, until the float of density meter floats up. When observing the readings, you should raise the density meter to a position that flush with your eye sight, and put the float in the center of the glass tube without touching the tube wall, so as not to affect the accuracy of reading.

If the temperature is below 25 ℃ or higher than 25 ℃, a thermometer should be used to measure the actual temperature of the electrolyte for correcting the value of electrolyte density.

(2) Correction of electrolyte density: errors exist in the density of the electrolyte at different temperatures, so the electrolyte density value shall be corrected accordingly. Electrolyte density at 25 ℃ shall be used as the benchmark. Therefore, if the electrolyte temperature is higher than 25 ℃, you should add 0.0007 to the actual measured value of density for an increase in temperature by 1 ℃; In contrast, if the electrolyte temperature is lower than 25 ℃, subtract the density by 0.0007 when the temperature decrease by 1 ℃; If the temperature difference is large, the density value shall be corrected by the following formula:

Density of electrolyte under standard temperature (25 ℃) can be converted by the following formula:

$D25 = Dt + 0.0007(t - 25)$

D25 — Electrolyte density when the temperature is 25 ℃

D25 — Measured electrolyte density when the temperature is t ℃

t — The electrolyte temperature when measuring the density

5.3 Charging of the accumulator

(1) Initial charge (generally initial charge has been conducted to the products before leaving the factory, so users could omit this operation)

The quality of initial charge would greatly impact the future performance of accumulator. So initial charge shall be conducted by experienced operators.

Initial charge should be carried out to new accumulators before use.

You should wipe clean the surface of the accumulator and check for damage before the initial charge.

Open the cover on the liquid filler to ensure that the vent is unblocked.

When the charger is under normal working conditions, you could fill sulfuric acid electrolyte with density of 1.26±0.005 (25 ℃) and temperature below 30 ℃ into the accumulator. In this case, liquid level shall be 15 ～ 25mm higher than the protection plate.

Place the accumulator aside for 3 to 4 hours, but ensure the time will never be more than 8 hours. Conduct initial charge only after liquid temperature is reduced to below 35 ℃. If the electrolyte level reduces after standing down, you should add electrolyte to it original level.

Sulfuric acid electrolyte shall be prepared by mixing the accumulator acid and distilled water according to national standard GB4554-84 (never use industrial sulfuric acid and tap water).

⚠ **During preparation, please slowly fill the concentrated sulfuric acid into the distilled water by trickle and continuously stir with a acid-proof glass rod or with a lead covered wood stick. Filling of distilled water into the sulfuric acid is not allowed, otherwise it will cause boiling and splashing of solution, resulting in burning.**

Connect the accumulator with the charger correctly in terms of polarity in a reliable manner, namely, ensure ro connect positive to positive and negative to negative.

For the first phase of initial charge, please use 0.5I5A (60A for D-600 accumulator) until the voltage of a single cell reaches 2.4V. Then we could shift to the second phase of initial charge;

For the second phase of the initial charge, you could use 0.25I5A (30A for D-600 accumulator) for charging；

The temperature of the electrolyte shall not exceed 45 ℃ during charging. Reduce the charge current by half or suspend the charge when the temperature is close to 45 ℃. Continue charging after the electrolyte temperature drops to below 35 ℃. In this case, the charging time shall be extended appropriatly;

Evidence of fully charged: In the second stage of the initial charging, charging voltage will be up to 2.6V and the voltage change shall be less than 0.005V; When electrolyte density is 1.28 ± 0.005 (25 ℃) , if there is no significant change within 2 hours and fine bubbles emerges intensely, the accumulator can be considered fully charged. The charging power is 4 to 5 times of the rated capacity and the charging time is about 70 hours;

In order to accurately control the content of sulfuric acid in the electrolyte, the density of the electrolyte should be checked at the end of the charging process; In case of any discrepancy, please use distilled water or sulfuric acid with density of 1.40 to adjust. Ensure the electrolyte density and height level is adjusted to the specified value within 2 hours since the charging starts;

Wipe clean the accumulator surface and cover the filler cap before putting into use.

（(2) General Charge

Do not use accumulator that is not fully charged. Users should pay close attention to the discharge level of accumulator during use. If the discharge level exceeds the set value, conduct charge in time. Excessive discharge is strictly forbidden. When the voltage drops o 1.7V / cell, electrolyte density decreases to 1.17, stop discharge timely and conduct charge soon. Never delay charging for a long time. Don’t stop halfway without reason during the charging process.

When conducting general charge, first open the flip cover on the filler cap cover and check whether the electrolyte height meet requirements. If not, please fill distilled water to adjust the liquid level to the required height.

Connect the output of the charger with the accumulator in accordance with the requirements. Connect positive to positive and negative to negative. Pay attention not to connect it reversed.

The charger compatible with the accumulator could automatically regulate the charging current according to the charging capacity and conduct charging until the accumulator is fully charged. (Please refer to the manual of charger for details on observation of the charging state)

In order to keep the accumulator status updated, it is recommended to record each charge and discharge conducted for each accumulator, so as to provide useful basis for determining whether or not the accumulator in the future or not. During the charging process, measure and record the current, total voltage, voltage of each single cell(the cells shall be numbered) , changes in the electrolyte density and temperature (measure with a 0 ~ 100 ℃ mercury thermometer) every 1-2 hour .

If large quantities of even and fine bubbles come into being, voltage of single cell is stabilized at 2.5-2.7V and electrolyte density and terminal voltage stops rising in 2-3 hours, then it can be determined that the accumulator is fully charged. If any cells have no or few bubbles, try to find out the reasons and fix the problem. Then record it in your work log.

Electrolyte temperature shall not exceed 45 ℃ during the charging process. The temperature of the electrolyte during charging shall not exceed 45℃. Suspend charging if the temperature is close to 45 ℃ and continue charging when the electrolyte temperature drops to below 35℃.

When the accumulator charging comes to end, the electrolyte density of the accumulator shall be checked and adjusted. If the electrolyte density fails to meet the requirements, draw some electrolyte from the original cells. If it is less denser than normal, fill concentrated electrolyte with density of 1.40 for adjustment; if it is denser than normal, dilute it by adding distilled water. After adjustment, the difference of electrolyte density of cells should not exceed 0.01 and the liquid level should meet relevant requirements. After adjusting the density, you could continue to charge with small current for 0.5 hours to mix the electrolyte. Then review the electrolyte density and adjust it if necessary. Finally, wipe clean and mount the accumulator for future use.

3）Balanced recharging

Under normal circumstances, although all the accumulator cells run under the same situation, but for some reasons, imbalance in the entire accumulator may occur. In such case, balanced recharging should be conducted to eliminate the charge difference between the accumulator cells, so as to achieve a balanced charging between all cells of the battery. Balanced recharging is simple and users can operate according to the instructions.

Perform balanced recharging to the accumulator once every two or three months during normal use. accumulators that are left unused for a long time should be charged before use.

5.4 Installation and replacement of the accumulator

Perform installation and replacement of batteries in a fixed and reliable manner to avoid tipping; Beating on the polar column and lead chuck with a tool is strictly forbidden; in the handling process, pay attention to avoid strong impact.

https://truckmanualshub.com/

6. Hydraulic system

6.1 Overview

The hydraulic system consists of working pump, multiple unit valve, lifting cylinder, tilting cylinder, pipelines and other component parts. See figure 2-48

The hydraulic oil will be supplied by the oil pump directly connected with the motor. The multiple unit valve will assign oil to each cylinder.

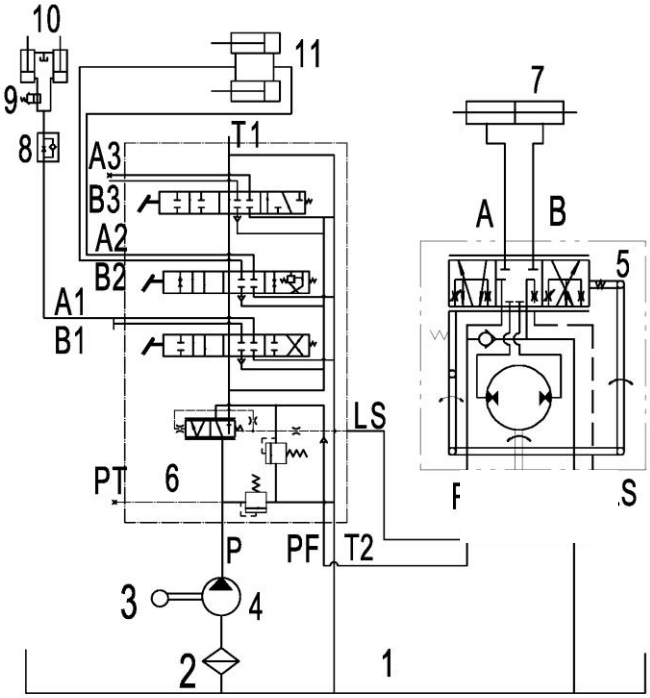

Figure 2-35 Diagram of t hydraulic system

6.2 Oil pump

The oil pump is a gear pump.

6.3 Multiple unit valve

The multiple unit valve includes two four-piece valves. Controlled by the valve rod of the multiple unit valve, the hydraulic oil from the work pump will assign high-pressure oil to the lifting cylinder or tilting cylinder. Safety valve and self-locking valve are installed in the multiple unit valve. Safety valve is located in the upper side of oil inlet in the multiple unit valve to control the system pressure; self-locking valve is located in the tilt valve plate to prevent serious consequences due to misoperation of control lever in case of no pressure source of the tilting cylinder. A check valve is mounted between the oil inlet and the oil abortion hole of the lifting valve plate, as well as between the oil inlet and the oil abortion hole of the lifting valve plate with check valve.

Please see Figure 2-36 for the shape of the multiple unit valve.

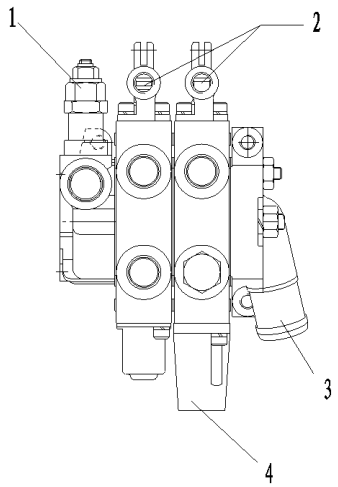

1. Safety valve 2. Microswitch bracket 3. Oil returning hole 4. Lifting speed sensor sets

Figure 2-36 Shape of multiple unit valve

(1) Operation of the slide valve (Take tilting slide valve as an example)

(a) Middle position (Figure 2-37)

At this time the high pressure oil discharged from the oil pump will return to the cylinder through the middle position.

(b) Pull in the slide valve (Figure 2-38)

The middle channel is closed at this time, oil from the inlet hole openes the check valve and flow into the cylinder interface B. Oil flows from interface A will flow to the cylinder through the low pressure channel. Then the slide valve can return to the middle position with the help of the return spring.

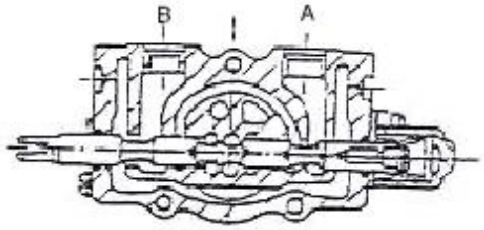

Figure 2-37

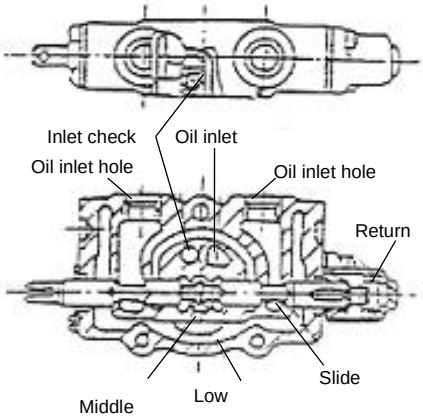

Figure 2-38

(c) Pull out the slide valve (Figure 2-38)

The middle position is closed at this time, oil from the inlet hole openes the check valve and flowes into the cylinder interface A. Oil flows from interface B will flow to the cylinder through the low pressure channel. Then the slide valve can return to the middle position with the help of the return spring.

(2) Action of safety overflow valve (Figure 2-39)

The overflow valve is installed between the "HP" interface of the oil pump and the low-pressure channel "LP". The oil that flows through the lifting valve "C" will acts on the different areas of diameter "A" and "B", so the check valve "K" and overflow lifting valve "D" all land on the valve seat. The preset pressure in the oil pump "HP" channel will act on the spring of pilot valve and the check valve "E" will open. Oil will flow around the valve into the low pressure "LP" side through the open-end hole.

Once the pilot valve "E" is open, the pressure at the inside of valve "C" will decrease and the

valve "E" and valve "C" will both land on the valve seat. Liquid flow at back of the flow valve "D" will be off, so the pressure inside is reduced. Pressure on pump "HP" channel side and the inside pressure are different, the valve "D" will open under the pressure difference and the oil will directly flow into the low pressure loop "LP".

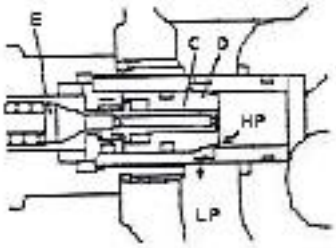

Figure 2-39

(3) Action of the self-locking tilt valve

Self-locking tilt valve is mounted in the tilt cylinder valves. The self-locking valve could prevent sudden fall of the main frame when negative pressure occurs in the cylinder and also eliminate dangers if the valve rod is titled due to misuse. With this self-locking valve, when forklift motor stops working, the main frame will not tilt forward even if the control lever is shoved. Oil flow direction when valve core is pulled out is the same with that shown in Figure 2-38, at which time the main frame is tilting backwards.

(a) When the valve core is inserted (pump is working), oil from the main pump will flow into the tilt cylinder through interface "B", and the oil flowes back from the cylinder will be used to the piston through the role of port A. Oil will return to the cylinder through the holes A and B on the valve core. See Figure 2-40

(b) When the valve core is inserted (pump is not working), there will be no oil that flows into interface "B" of the cylinder, so that the pressure in part P will not increase. Therefore, the piston will not move and oil in the cylinder Interface "A" can not return to the oil cylinder, which won't move. See Figure 2-41

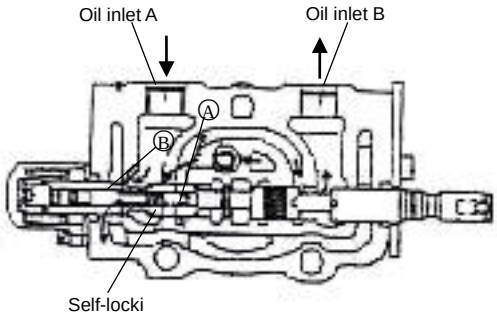

Figure 2-40

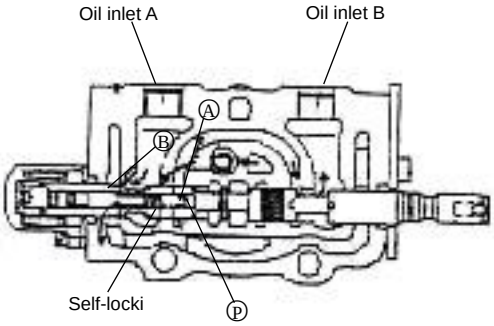

Figure 2-41

(4) Pressure adjustment of the safety valve

The pre-set pressure of the safety valve: 13.5/16.8MPa;

⚠ **Pressure of the safety valve has been set by the manufacturer and users shall not adjust it wilfully.**

6.4 Lift Cylinder and Lift Chain See Figure 2-25

Lift cylinder piston is single-action piston; consist of cylinder body, piston rod, piston, cylinder head etc. Two lift cylinders located on the back of outer gantry mounting, their bottom fixed on support of lift cylinder of outer mast by pins and bolts, the top of cylinder (i.e. top of piston rod) connected with beam

which is on outer gantry mounting .and there is speed-limit valve installed inside of the right lifting cylinder.

Piston is fastened on piston rod with elastic steel wire; oil seal and support ring are assembled on the outer race of pistion
There is a cut-off valve assembled on the bottom of cylinder. When lifting gantry mounting, t acts as protection in case of sudden outburst of high pressure pipe.

There are steel-backed bearing and oil seal assembled on the head of cylinder to support piston rod and to prevent from dust entering.

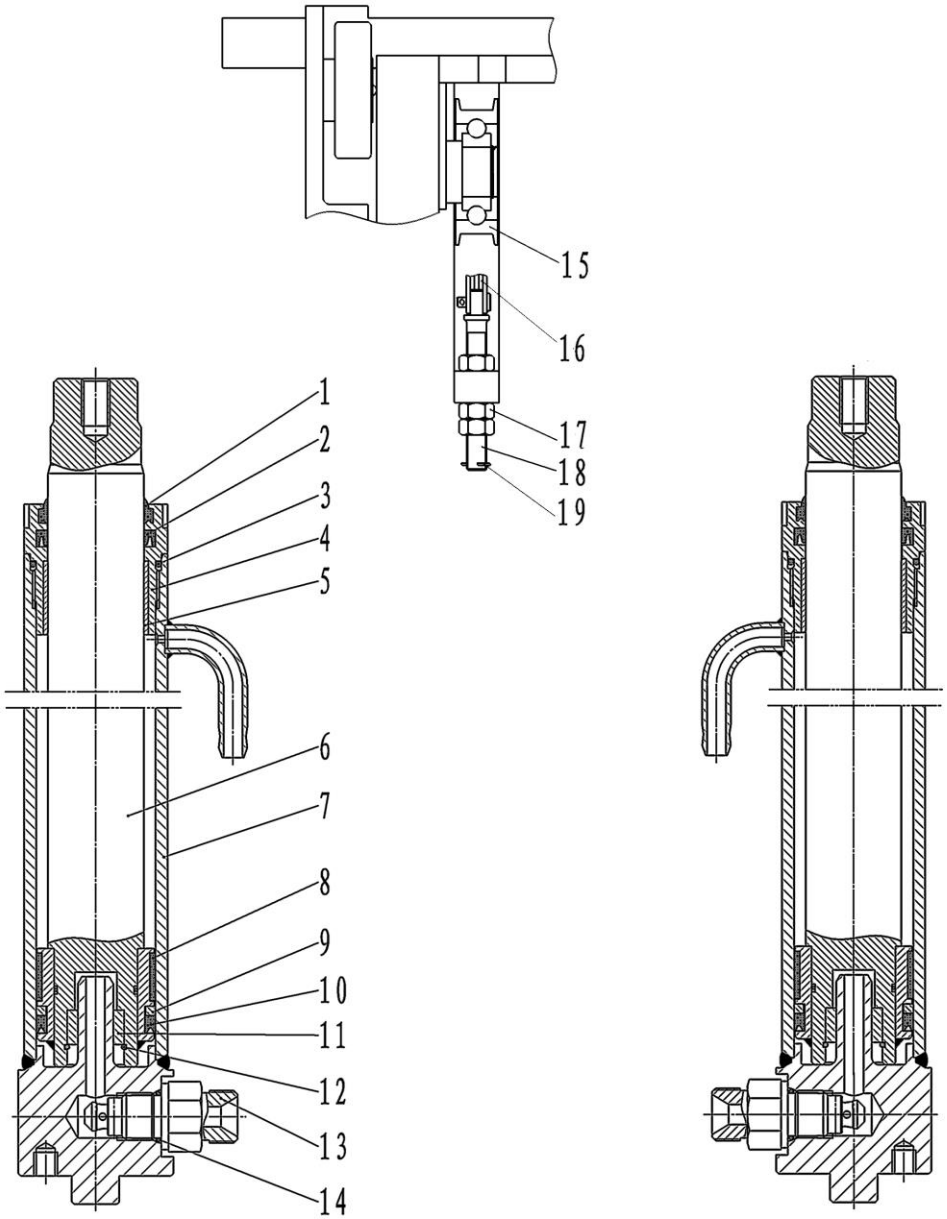

Left Lift Cylinder Right Lift Cylinder

1. Anti-Dust Ring 2. Shaft Seal 3. O-Ring 4. Guide Sleeve 5. Steel-Backed Bearing

6. Piston Rod Assembly	7. Cylinder Body	8. Support Ring For Hole	9. Retainer Ring	10. Shaft Seal
11. Valve Bush	12. Steel Cable Retainer Ring	13. Shut -Off Valve	14. O-Ring	15. Chain Wheel
16. Chain	17. Nut	18. Chain Connector	19. Split Pin	

Figure 2-25 Lift Cylinder and Chain

■Working State of Shut-Off Valve

There is a shut-off valve on the bottom of lift cylinder to prevent load from sudden drop in case of sudden outburst of high pressure pipe. (see figure 2-26) oil from lift cylinder goes through shut-off valve，holes around slide valve make pressure difference between two cavity. When the pressure difference is less than spring force，slide valve will not work, if high pressure pipe outburst，it will occur large pressure difference which makes slide valve move and block the oil holes around， only a little oil float through small hole on the end of slide valve to make fork down slowly.

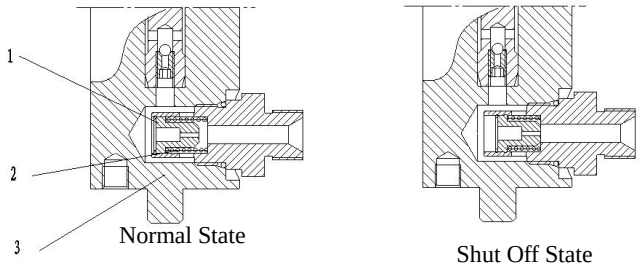

1. Lift Cylinder Body 2. Compression Spring 3. Spool

Figure 2-26 Shut-Off Valve

6.5 Speed-Limit Valve

Speed-limit valve installed in lifting pipe to control lowering speed of fork,it acts as protection in case of sudden outburst of high pressure pipe.

Connecting Method Refer to Figure 2-27

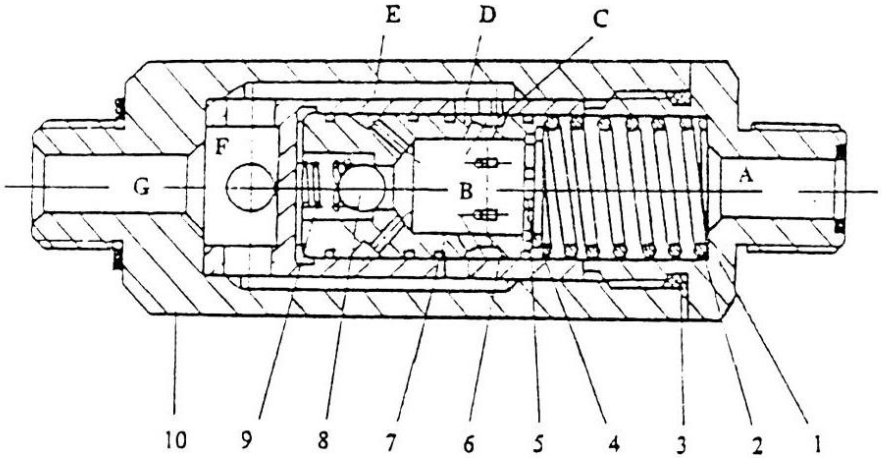

(1) Speed limiting valve joint (2) Spring (3) Sealing element (4) Circlip (5) Throttle slice (6) spool (7) Valve sleeve (8) steel ball (9) Check valve spring (10) valve body

Figure 2-27 Speed-Limit Valve

6.6 Tilting Oil Cylinder

The tilting oil cylinder is double acting, with its piston rod end connected to the main frame through the earrings. Bottom of the tilting oil cylinder is connected with the frame by pins.
and there is a tilted cylinder at each side of the forklift.

The tilting cylinder is mainly composed by piston, piston rod, cylinder, cylinder bottom, guide sleeve and seals. The piston and piston rod adopt welded structure, with the piston outer surface mounted with a bearing outer ring and two Yx seal rings. In the internal hole of guide sleeve there mounts an axle sleeve, Yx seal ring, retaining ring and dust ring. The shaft sleeve support the piston rod, seals, retaining ring and dust ring that protects from oil spills and dust, all of which are mounted to the cylinder together with the 0-ring. See Figure 2-59

When the tilt sliding valve is pushed forward, the high-pressure oil will flow from the cylinder bottom to push the piston, moving the main frame titling forward. When the slide valve is pulled backwards, the high-pressure oil will flow into from the front end of the cylinder to pull the piston backward, moving the main frame titling backward.

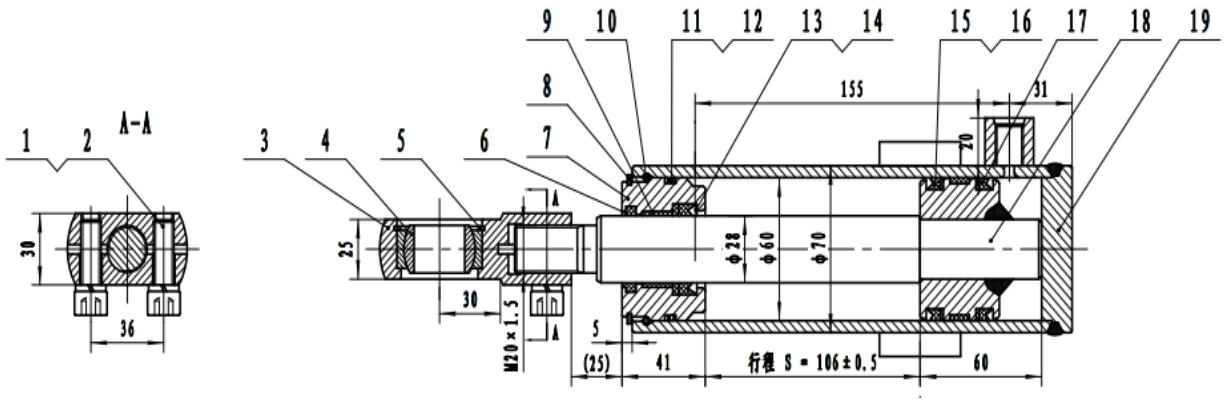

1. Screw	2. Washer	3. earrings
4. joint bearing	5. circlip for hole	6. scraper seal
7. cylinder cover	8. circlip for shaft	9. steel-backed bearing
10. Roundwire snap rings for hole	11. bead flange	12. O-Ring
13. bead flange	14. shaft seal	15. Kongfeng
16. bead flange	17. Hole support ring	18. piston rod
19. cylinder block	20. oiling cup	

Figure 2-45 tiltling oil cylinder

6.7 Hydraulic oil cylinder

The hydraulic cylinder is installed at right rear of the frame. Meshy filter is mounted to the cylinder and breather is mounted to the cylinder cover. See Figure 2-46

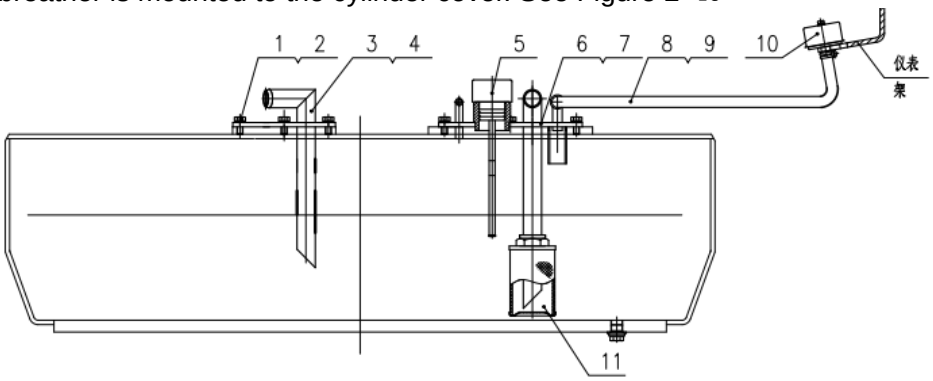

1. bolt	2. washer	3. Cover plate of oil cylinder	4. Paper washer
5.Cover of refueller	6. cover board assembly	7. Paper washer	8. oil tube
9. Clamp	10. Breathing device	11. Meshy filter	

Figure 2-46

6. 8Maintenance and adjustment

Maintenance of working oil pump

(1) Disassembling

Clean it thoroughly before disassembling. Removed parts should be placed on a clean paper or cloth. Be careful not to make the parts dirty or damaged.

(a) Place the pump flange at the clamp table.

(b) Remove the connecting bolt 11, rear end cover 5 and pump 1.

(c) Remove the liner plate 6, drive gear 2 and passive gear 3.

(d) Remove the seal ring 7 and retaining ring 8 from the front and back end cover.

Note: If you do not plan to replace the seal ring, do not remove it from the front end.

(2) Check

Check the disassembled parts and clean them with gasoline (except rubber parts).

(a) Pump check

If the contact length of pump cavity and gear is greater than 1/2 of the circumference, replace the pump.

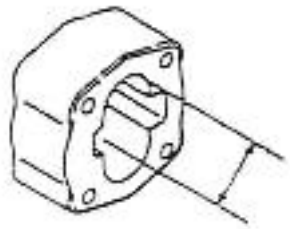

Figure 2-47

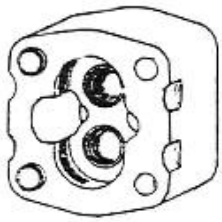

Figure 2-48

(b) Check of liner plate

Check the contact surface of the lining plate and replace it if the surface is damaged or if the lining thickness is less than the specified value. Specified value of the lining thickness: 4.94mm.

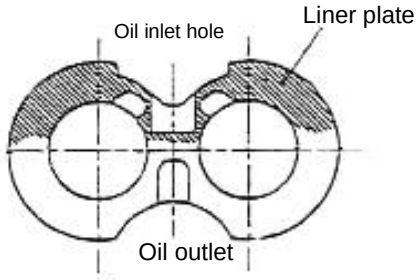

Figure 2-49

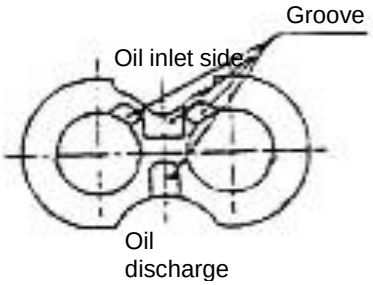

Figure 2-50

(c) Check of the front and rear pump cover

If the inner surface of the bush discolours (turn brown) exceeding the range of 150 °, replace it.

(d) Check of the driving and passive gears

Replace a pair of gears in case of excessive wear. If size of D is less than the specified value, replace in pairs.

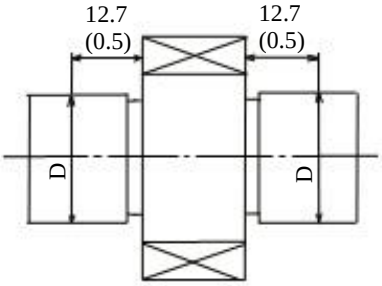

Figure 2-51

(e) If necessary, replace the seal rings, bushing seal, retaining ring, oil seal, spring ring.

(3) Assembly

(a) Mount a new seal ring and a new retainer ring at the front end cover of the pump.

(b) Mount the upper liner plate at the front end cover trench. Be careful not to mis-distinguish the oil abortion hole and the oil discharge hole.

(c) Mount the drive and passive gears on the front end cover.

(d) Mount the liner plate on the gear side to align the groove to the gear points. Be careful not to mis-distinguish oil suction side and oil discharge side.

(e) Mount a new seal ring and a new retainer ring on the groove at the rear-end cover. See Figure 2-52

(f) Mount the rear cover on the pump body and pay attention to distinguish the oil abortion hole and the oil discharge hole.

(g) When all the parts have been installed, tighten the connecting bolts to the specified torque of 9 ~ 10kg.m.

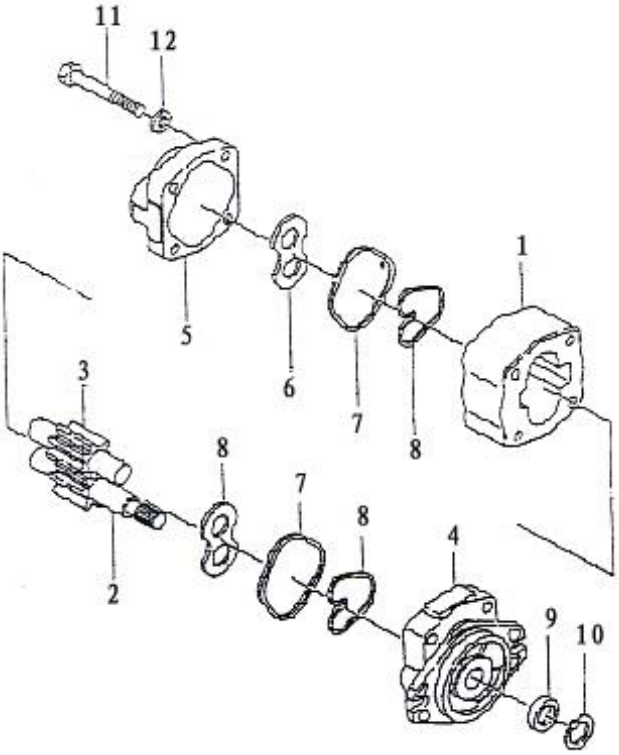

1. Pump body 2. Driving gear 3. Passive gear 4. Front-end cover

5. Rear-end cover 6. Liner plate 7. Seal ring 8. Retainer ring
9. Oil seal 10. Flexible ring 11. Bolt 12. Washer

Figure 2-52Gear pump

(4) (4) Test run

Conduct running-in of the pump to check if it functions properly. Then perform oil pump testing on the test bench or test by the following steps on the forklift truck:

(If oil pump is subject to decomposition and maintenance due to serious wear and jamming caused by the hydraulic oil, the hydraulic oil and filter should be replaced before test-running on the forklift.)

(a) Mount the pump onto the forklift and mount the pressure gauge onto the test hole of the multiple unit valve.

(b) Loosen the adjusting screw of the overflow valve to keep the pump working for 5001000-1000rpm for about 10 minutes. Ensure that the oil pressure is lower than 10kg/cm ².

(c) Increase the pump speed to 1500-2000rpm and keep it running for about 10 minutes.

(d) Set the pump operating speed at 1500-2000rpm. Perform pressure increment of 20-30kg/cm ² and keep it running for 5 minutes after each increase, until the pressure reaches 175kg/cm ². Then keep each oil line working for 5 minutes and replace the oil returning filter.

When increasing the oil pressure, pay attention to the oil temperature, pump surface temperature and the operation sound. If the oil temperature or the pump surface temperature rises excessively, reduce the load to lower the oil temperature before further testing.

(e) After testing, set the overflow pressure at 175kg/cm ² and measure the flow traffic. Determine the flow traffic by measuring lifting speed.

6.9 Failure nalysis

If the hydraulic system fails, please find out the causes according to the table below and conduct necessary repairs.

(1) Failure analysis of the multiple unit valve (Table 2-8

Table 2-8

Fault	Cause	Countermeasures
Pressure of the lifting oil line can’t be increased	Jamming of the slide valve	Clean it after disassembling
	Oil hole is blocked	Clean it after disassembling
Vibration Pressure rise is slow	Jamming of the slide valve	Clean it after disassembling
	Inadequate exhaust of air	Full exhaust
Steering oil pressure is greater than the specified value	Jamming of the slide valve	Clean it after disassembling
	Oil hole is blocked	Clean it after disassembling
Less than the required oil volume	Overflow valve is not well adjusted	Adjustment
With noise	Overflow valve is not well adjusted	Adjustment
	Wear of sliding surface	Replace the overflow valve
Leakage (external)	Aging or damage of the O seal ring	Replace the O seal ring
The set pressure is low	The spring is damaged	Replace the spring
	Damage of valve seat surface	Adjust or replace the overflow valve
Leakage (internal)	Damage of valve seat surface	Fix the seat surface
The set pressure is high	Jamming of the valve	Clean it after disassembling

（2）Failure Analysis of the oil pump（Table 2-9

Table 2-9

Fault	Cause	Countermeasures
Low volume of oil discharge	The oil level in the oil tank is low	Add oil to the specified value
	The tube or filter is blocked	Clean or replace as needed
Low pressure of the pump	●Liner plate damage ●Bearing damage ●Poorly functioned seal ring, bushing seal or retaining ring	Replace
	Overflow valve is not well adjusted	Adjust the pressure of overflow valve to the specified value with a pressure gauge
	There is air within the system	●Re-tighten the side tubing of the oil inlet ●Add oil ●Replace the oil pump seal
With noise when running	The inlet tube is damaged or the filter is blocked	Check the tube or repair oil filter
	Looseness or leakage of the oil inlet	Tighten the loosened parts
	Excessive oil viscosity	Replace the oil with viscosity compatible with the pump operating temperature
	Bubbles in the oil	Find out the cause of bubbles and take measures accordingly
The pump leaks oil	The pump seal or seal ring is damaged	Replace
	Pump is damaged	Replace

7 Lifting system

7.1 Overview

Composed by the inner and outer main frames as well as the forklift frame, the lifting system is a roller vertical elevating system with two levels.

7.2 Link between the mast and chassis(Figure 2-53)

Inner and outer main frames are welded structures. The outer door frame with support into the bottom thing The central part of the outer main frame is connected with the frame by the tilting cylinder and can tilt forward and backward under the action of the tilting cylinder.

https://truckmanualshub.com/

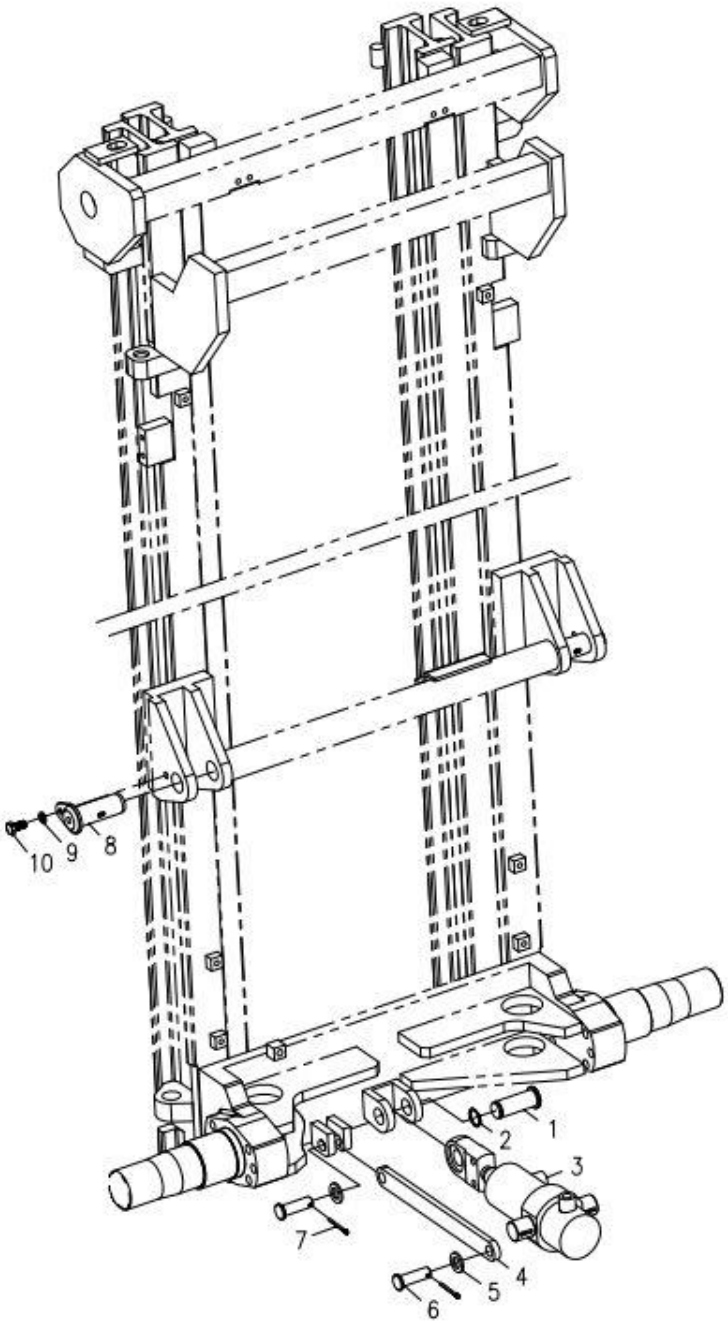

1. shaft pin
2. spring ring
3. Tilting oil cylinder
4. humper
5. washer
6. pin
7. Cotter pin
8. shaft pin
9. Spring washer
10. bolt

Figure 2-53 Link between the mast and chassis

7.3 Forklift frame (Figure 2-54)

Forklift frame will roll within the inner main frame through the main roller, which is mounted onto the main roller shaft and fixed by elastic rings. The main roller shaft is welded onto the fork frame and the side roller is integrated into the adjustable composite roller that rolls along the wing plate of the inner main frame. Use two fixed side rollers to roll along the outside of the wing plate in the inner main frame to eliminate rolling gap. The longitudinal load will be born by the main roller. When the fork rises to its highest level, the top roller will be exposed from the main frame top. Lateral load will be born by the side roller.

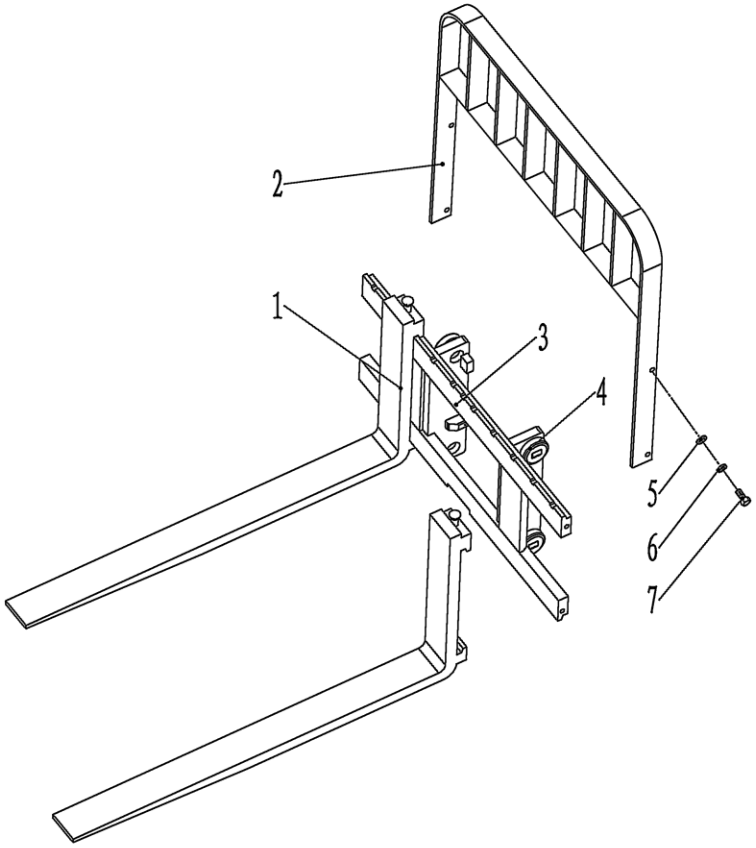

1. Back-rest	2. Fat washer	3. Spring washer	4. Bolt	5. Roller
6. Spring washer for shaft	7. Composite roller	8. Fork frame	9. Fork assembly	

Figure 2-54 Fork frame

7.4 Roller position (Figure 2-55)

There are two types of rollers: outer frame composite roller, composite roller of inner frame and fork frame. The two rollers are installed in the outer door frame, inner door frame and fork rack. Composite roller consists of the main roller () and the side roller, with the former bearing loads from the front and rear sides and the latter bearing loads from the side to achieve free movement of the inner door frame and fork frame.

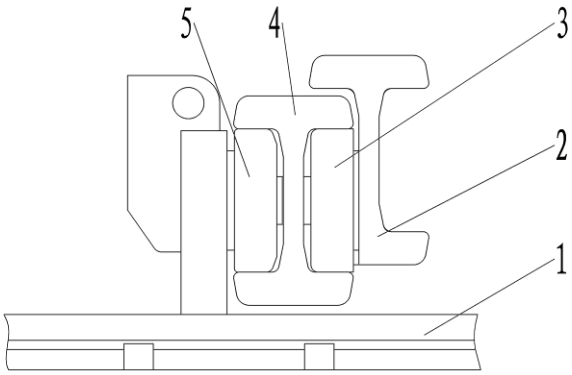

1. Fork frame 2. Outter main frame 3. Composite roller of outer frame
4. Inner main frame 5. Inner frame and composite roller of fork frame

Figure 2-55 Roller position

Note: (a) adjust the clearance of side rollers at 0.5mm;

(b) Apply lubricant oil onto the main roller surface and the contact surface of main frame.

7.5 Maintenance and adjustment

7.5.1 Regulating the lifting cylinder. See Figure 2-56

After disassembling or replacing the lifting cylinder, inner main frame or outer main frame, re-adjust the lifting cylinder stroke. Adjustment method is as follows:

(1) Mount the piston rod without adjusting pad onto the beams of inner main frame.

(2) Slowly lift the main frame to its maximum extent of stretching and check the synchronization of two cylinders.

(3) Add the adjustment pad between the piston rod head of the cylinder and the beam on the inner main frame. Thickness of the pad is 0.2mm or 0.5mm.

(4) Adjust the tightness of the chain.

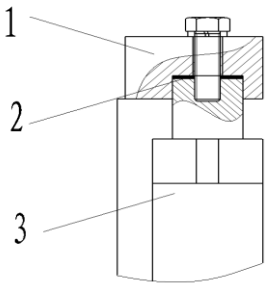

1. Upper beam on the inner main frame 2. Adjustment pad of lifting cylinder 3. Lifting cylinder

Figure 2-56 Regulation of the lifting cylinder

7.5.2 Height adjustment of the fork frame (Figure 2-57)

(1) Park the forklift on level ground and set the main frame vertical.

(2) Lower the fork bottom to make it reach the ground. Then adjust the adjusting nuts on the upper end joint of the chains, so that there will be a certain distance A between main roller and the lower end of the inner main frame

(A=24～29)。

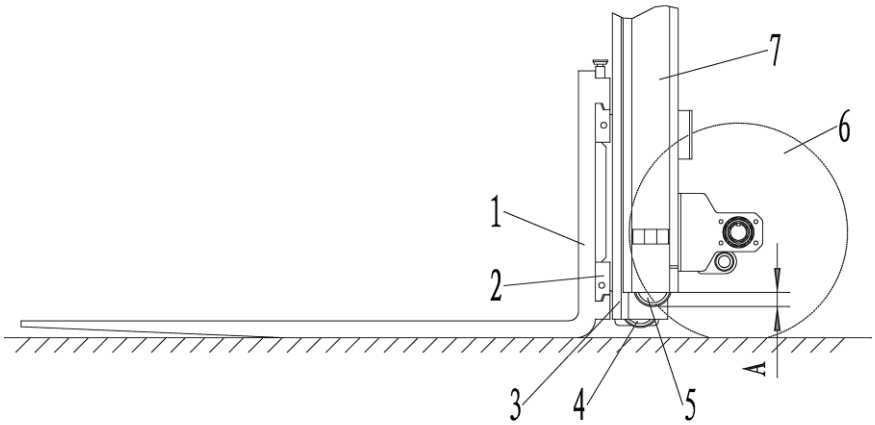

Figure 2-57

1. Fork 2. Fork frame 3. inner mast 4. Main roller
5. Main roller 6. Tires 7. outer mast

(3) Lower the fork to the ground and tilts it backward in place. Adjust the upper end joints of the chain and then regulate the nut to set tightness of the two chains at the same degree.

7.5.3 Change or replace the roller of the fork frame

(1) Place a tray on the forklift and park it on level ground.

(2) Lower the fork and tray down to the ground.

(3) Remove the upper end joint of the chain and remove the chain from the chain wheel.

(4) Lift the inner main frame (① in Figure 2-58)

(5) Reverse the forklift after confirming that the fork frame has been separated from the outer main frame (② in Figure 2-58).

(6) Replace the main roller

(a) Remove all of spring rings and remove the main roller with drawing tools. Pay attention to the adjustment pad.

(b) Confirm that the new roller is the same with the newly replaced one. Mount the new rollers to the fork frame and fix it with an flexible washer.

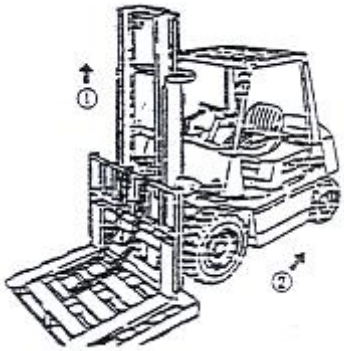

Figure 2-58

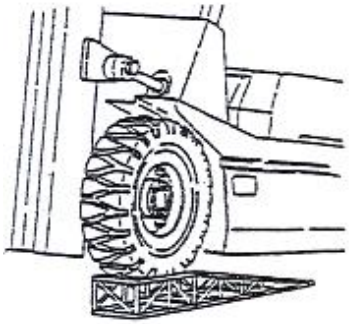

Figure2-59

7.5.4 Replace the roller of main frame as shown in Figure 2-59

(1) Accoding to the method of replacing fork frame roller as described in 7.5.3, remove the fork frame from the main frame.7.5.3

(2) Drive the forklift to a level ground and jack up the front wheels for 250-300mm.

(3) Apply the hand brake and put pads under the rear wheels.

(4) Remove the lifting cylinder and the mounting bolts of inner main frame. Lift the inner main frame and be careful not to loose the adjustment pad at head of the piston rod.

(5) Remove the connecting bolts on the lifting cylinder and at the bottom of the outer main frame, and then remove the lifting cylinder and the tubing between the two cylinders without loosening the pipe joints.

(6) Lower the inner main frame and remove the main roller at the bottom of the inner main frame. The main roller at the upper end of the outer main frame will be exposed out of the inner main frame top.

(7) Replace the main roller.

(a) Remove the main roller at the upper end with drawing tools and keep the adjustment pads appropriately.

(b) Install the new roller and the adjustment pads removed at the (a) step.

(8) Lift the inner main frame until all the rollers enter the main frame.

(9) Mount the lifting cylinder and the fork frame in reverse procedures of removing.

7.6 Installation instruction of accessories

⚠ **If you need to install accessories, please contact our sales department and never install by yourselves.**

8 Removal and installation

8.1 Precautions

(1) Only qualified operator can remove or repair the forklift's parts.

2) Before disassembling and detection operations, park the forklift on a flat ground and wedge the wheels, otherwise accidental movement of the forklift may occur. Meanwhile, set the main switch at the off position and disconnect the accumulator plug.

(3) Before disassembling and testing operations, remove all the rings, watches and other metal objects on your body to avoid accidental short circuit.

(4) Please use the right tools for the disassembling process, and use the specified tools if required.

(5) Please choose an appropriate spreader according to the size and weight of the removed parts, so as to avoid danger.

(6) Be sure to mount sling steadily before lifting to prevent falling of the cargo. Please keep the sling tightened during the lifting process.

(7) When removing a heavy part from the forklift, be careful to keep balance and to avoid damage.

8.2 Lifting points of the detached parts

(1) Lifting description of the lifting system as shown in Figure 2-60

Model	Overall Dimension L×W×H (mm)	Weight (kg)
FE3R13-16	1700×1010×2150	670

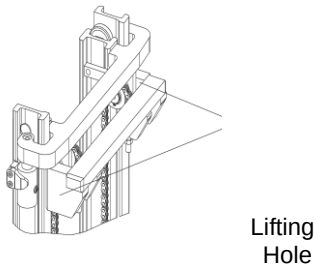

Figure 2-60

(2) Lifting description of the overhead guard as shown in Figure 2-61

Model	Overall Dimension L×W×H (mm)	Weight (kg)
FE3R13-16	1300×980×1400	56

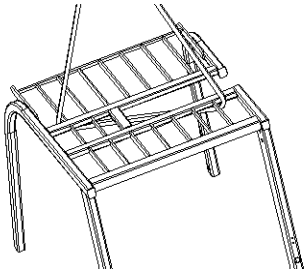

Figure 2-61

(3) Lifting description of the counterbalance as shown in Figure 2-62

The lifting ring on the counterbalance can be used to lift the balance weight only. Do not use it for lifting the whole forklift.

Model	Overall Dimension L×W×H (mm)	Weight (kg)
FE3R13	540×990×810	900
FE3R16	540×990×810	850

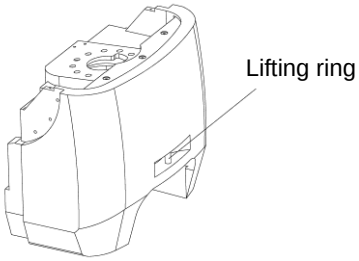

Figur2-62

(4) Lifting description of the accumulator as shown in Figure 2-63

Model	Overall Dimension L×W×H (mm)	Weight (kg)
FE3R13-16	825×485×630	676

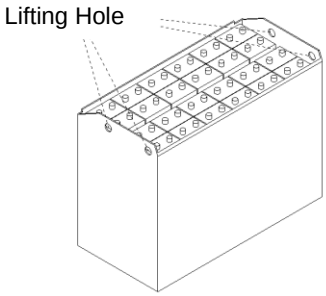

Figure 2-63

The accumulator also functions as a counterbalance, so users shall not arbitrarily change it; otherwise the overall balance and other features may be affected。

Chapter 3 0peration, use and safety of the forklift

Ⅰ. Driving and operation

In order to ensure good performance, safety operation and economic use of the forklift, we specify the precautions below that should be noted during proper driving operation.

1. The use of a new forklift

⚠ **•All the package materials removed from a new forklift shall be recycled according to local regulations.**

• Test run should be carried out before using a new forklift to see if the forklift parts can work properly.

The service life of your forklift depends on your initial operation. When using it in the first 200 hours, please pay great attention to the following issues:

⚠ **• Heat engine operation shall be conducted before use no matter what season it is.**

• Conduct maintenance in a timely and through manner.

• Never operate it violently or rudely。

2. The relationship between forklift stability and load

In the load curve, the front wheel centre of the forklift is taken as the fulcrum to keep the forklift body and load on the fork balanced. Pay attention to load quantity and load centre when driving to maintain stability of the forklift.

⊘ **·In case the load exceeds the load curve, rear wheels may be lifted and subject to extreme cases, and the forklift may rolling over, causing serious accidents. If goods are stacked at a place close to the sharp tip of fork, the risks above also exist. In this case, decrease the load weight.**

3. Load centre and load curve

Load centre refers to the distance between the front surface of the fork and the cargo's centre of gravity. Load curve label indicating the relationship between the load centre and the allowed loading quantity (allowable load) is attached to the forklift. Replace the plate in case of damage or loss.

⊘ **·If the forklift is equipped with accessories for cargo handling, such as the side shifter, bucket, or rotating fork, the allowable load shall be less than standard forklift (without accessories) for the following reasons:**

1) Reduce loads equal to the weight of the accessories.

2) Since adding of accessory will move the load centre forward, the allowable load will be reduced accordingly.

The installation of accessory will cause load centre shift forward, which is known as the "loss of load centre."

Do not exceed the allowable load indicated by the load curve attached to the forklift or the accessory.

4. Forklift stability

4. Standard of forklift stability is specified in IS0 or other standards. However, the stability described in these standards does not apply to all the running status and the stability of forklift varies with different operational status.

The maximum stability can be ensured under the following operating status:

1) The ground is flat and solid.

2) Operate under standard no-load or load.

Standard no-load status: fork or carrying accessories are 30cm away from the ground and the main frame can tilt backwards to the specified position without load.

Standard load status: fork or carrying accessories are 30cm away from the ground, allowable load capacity is carried at the standard load centre and the main frame can tilt

backwards to the specified position.

·When loading and unloading goods, try to minimize the tilting degree when tilting forwards and backwards. Never tilt forwards unless the load is close to or fixed by steel shelves or the lifting height is low.

5. Transportation and handling of the forklift

(1) Forklift transportation

• When transporting with a truck, stabilize the wheels and fix the forklift with ropes so that the forklift won't slide within the truck.

• During handling and road transportation, the full length, full width and full height of the forklift shall be in compliance with relevant laws and regulations.

(2) Loading and unloading of the forklift

• Use a slab with sufficient length, width and intensity.

• Pull the parking brake in an effective and efficient way to stop the wheels.

• The slab shall be stably fixed to the truck centre and there shall be no oil and grease on the slab.

• The height at the left and right side of the slab shall be the same so that the forklift can move smoothly during loading and unloading process.

• To avoid dangers, please do not change direction or move laterally when driving on a slab.

• Slowly reverse the forklift to achieve simultaneous boarding of the left and right tires when loading the forklift onto a truck.

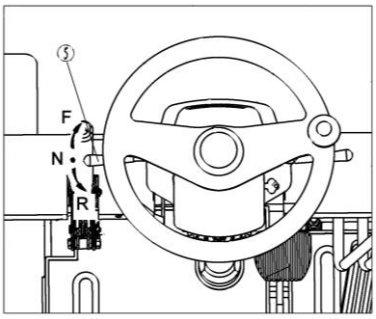

6. Preparation before driving

(1) Check the position of the direction switch lever ⑤

Place the switch lever in the middle position (N).

(2) Turn on the key switch

Seize lever ball of the steering wheel, and then turn the key switch t

• Even if the key switch is turned to the "0N" position, it will take about 1 second for the brake circuit to start off after it starts action.

• If the gear lever is placed at forward "F" or reverse "R" position before turning the key switch to the "0N" position, please shift the lever to the middle position "N".

• If the accelerator pedal is rapidly depressed, it is likely that the forklift will accelerate suddely, be sure to pay attention.

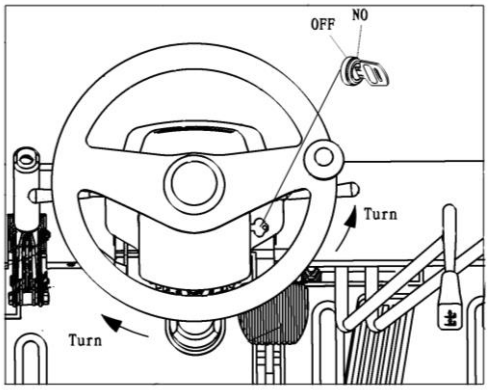

(3) Tilting backward of main frame

Pull back the lever to lift the fork to 150 - 200mm away from the ground and pull back the lever to tilt the main frame backward.

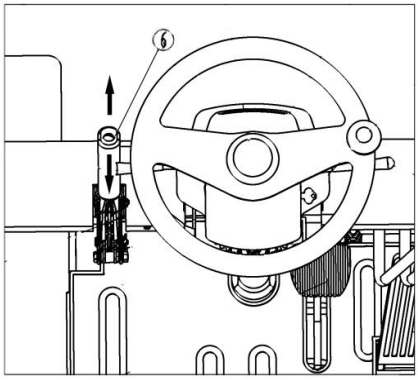

(4) Operation of the direction switch lever ⑤

Use the direction switch lever to decide the driving direction (forward - backward).

Forward F: push the direction switch lever forward.

Backward F: push the direction switch lever backward.

(5) Release the parking brake lever;

Depress the brake pedal.

Fully release the parking brake lever forward, seize the steering wheel with your left hand and place your right hand gently on the steering wheel.

7. Driving

(1) Starting

Release the brake pedal and gradually depress the accelerator pedal, and the forklift will start moving.

Change in acceleration depends on how much the accelerator pedal has been depressed.

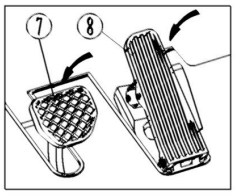

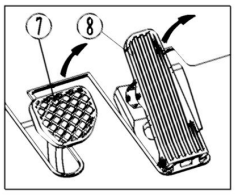

⚠ **·Do not suddenly start or stop, otherwise the goods loaded may fall down.**

(2) Deceleration

Slowly release the foot pedal. Depress the brake pedal if necessary. If it is not for an emergency brake, slowly release the accelerator pedal to decelerate until the forklift stops. But even if the accelerator pedal is released rapidly, emergency brake won't be activated. Under emergency situations, please press the brake pedal to perform emergency braking.

⚠ **• Slow down in the following cases:**

a) When turning at a crossing;
b) When moving close to the goods or tray;
c) When moving close to the goods;
d) When staying in a narrow channel;
e) When the ground / road condition is bad.

• During reversing operation, you must watch the rear side directly and ensure safety through visual confirmation. Relying only on the rear view mirror may cause dangerous.

(3) Turning

Unlike common cars, forklift adopts rear-wheel steering. So operators shall slow down and watch the rear side when turning.

⚠ **• In the case of steering, the faster the forklift moves, the smaller turning radius will be, and more easily the forklift will overturn. Please be quite careful.**

(4) Simultaneous operation of driving and lifting (micro-operation)

a) First drive the forklift until the front end of fork is 3-5m away from the goods.

b) Fully depress the brake pedal. (Travel stop)

c) Depress the accelerator pedal to obtain the right operation speed.

d) Operate the lifting lever to start lifting operation.

⚠ **·Simultaneous operation of driving and lifting (micro-operation) require high level of skills. The operator must correctly understand the form, gravity centre and other features of the goods and ensure stability of the forklift before carrying out low-speed lifting and lowering operations. Be extremely careful when conducting simultaneous operation.**

·Tilting operation involves high risk. Never conduct other operations than extending or retracting of the fork on a cargo platform.

• To eliminate the danger of lifting during driving, conduct lifting only when the forklift is close to the cargo platform.

8. Parking and temporary parking

⚠ **·Park safely**

• The parking place should be spacious and the ground shall be flat.

• If you have to park the forklift without load on a ramp, the main frame side shall be placed down-hilling and fix the wheels to avoid sliding.

• Please park the forklift in a safe place other than the operation site or designated parking places.

• When necessary pay attention to the sign and signal lights.

• Park on solid ground and try to avoid sliding and falling.

• If the fork can be lowered due to failures of the forklift, rap a cloth around the fork tip and adjust it to face the direction where no people and vehicles will pass.

• Pay great attention to road conditions to see if it is slippery or have any collapse.

• Lower the fork after the forklift completely stops. Reducing the fork of the forklift during driving could be quite dangerous.

• Do not jump from the forklift.

• When getting off, you shall face the direction of the forklift and step on the pedal for de-boarding.

• For deceleration, depresses the brake pedal to stop the forklift, and set the gear lever switch to neutral position "N".

• Park the forklift in a place that would not hinder operation of other vehicles according to the following procedures.

a) Pull the parking brake lever to the specified place to activate the parking brake.

b) Lower the fork until it reach the ground.

c) Turn the key switch to the "0FF" position.

d) Remove the key and keep it safe.

e) Be careful when boarding and de-boarding.

f) Park the forklift

☞ **·When leaving the forklift, fully pull the parking brake lever to slightly tilt forward the main frame. Lower your fork to the ground. When parking the forklift on a ramp, place pads under the wheels.**

• Remove the keys when leaving the forklift.

9. Use of the accumulator

(1) Charging of the accumulator

Choose appropriate charger for charging of the accumulator and operate in strict accordance with the "Maintenance Manual" of the charger.

a) Don’t maintain the electrolyte at a too low level.

⚠ **• Maintain the electrolyte at the required level, otherwise the accumulator may be overheated or burned.**

• When the electrolyte level is low, the accumulator life will be shortened.

b) Add distilled water

c) Overcharge is not allowed

d) Charging should be carried out in a well ventilated place

⚠ **• Charging should be carried out in a well ventilated and moisture proof place.**

b) Open the accumulator cover.

⚠ **• Hydrogen will be generated during the charging process. Open the accumulator cover during charging.**

f) Check the connecting terminal, cables and connectors.

⚠ **• Users should check the connectors and cable lines for damage before charging.**

·Never conduct charging in case of the following conditions:

- The connector electrode is damaged.

- Connection terminals and cable lines are corroded.

These conditions can result in sparks, burning, fire or explosion。

g) Conduct charging after the key switch is turned off

h) Check the specific gravity

Measure the specific gravity of electrolyte in all the single-cell accumulator before charging to identify abnormality of the accumulator. Understanding the specific gravity before charging could help eliminate the possibility of accidents.

i) When connecting and disconnecting the power connector, hold the plug or handle instead of holding the cable.

⚠ **• Do not pull out the cable.**

• If the cable and power connectors are damaged, please contact our sales department and replace the damaged cables and power connectors.

j) Disconnecting the charging

⚠ **·Disconnect the charging in strict accordance with steps required by the "Maintenance Manual" of the charger.**

• Do not pull out the charger plug during charging, or else danger may be caused by sparks.

(2) Replace the accumulator

If the accumulator on the forklift completely runs out of power, another fully charged accumulator should be timely used to replace the original one. Then recharge the original accumulator.

⚠ **·Before replacing the accumulator, ensure the new accumulator match the forklift. If a accumulator doesn't match with the forklift used, working hours of the forklift will shorten or may cause rolling of the forklift.**

·Replacement of the accumulator should be carried out on a platform 。

Follow these steps to replace the accumulator:

⚠ **• When using another forklift to lift the accumulator to be replaced, appropriate spreader (accessory) should be used.**

• Only experienced operators could lift the accumulator.

a) Disconnect the accumulator plug.

b) Open the accumulator top cover.

Take advantage of gas spring or other means to ensure that the accumulator top cover is locked, because its faliing may cause physical injury or damage to the forklift.

c) When lifting the accumulator out of the forklift, be careful not to damage the steering wheel or other forklift parts.

d) After a group of fully charged accumulator is well placed, securely connect the accumulator plug.

e) Cap the accumulator cover.

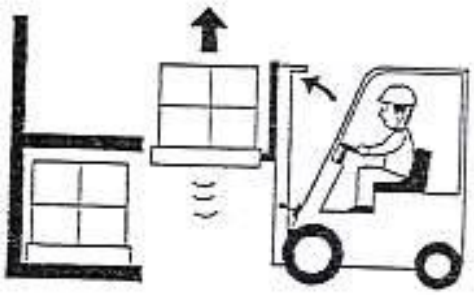

⚠ ·When fitting on the accumulator cover, be careful not to hurt your fingers.

• Be careful to keep it stable when lifting the accumulator, so as not to cause collision damage to the forklift body.

10. Stacking

⚠ • Check the following items prior to operation of forklift:

a) Ensure the goods in the loading area will not fall and be damaged.

b) Ensure that no obstruction for the goods or cargo in the way .

Conduct stacking according to the following procedures:

(1) Slow down when driving close to the stacking area.

(2) Park before the stacking area.

(3) Check the safety status around the stack area.

(4) Adjust the forklift position to place it in front of the stacking area.

(5) The main frame shall be perpendicular to the ground and the lifting fork shall be higher than the stacking height.

(6) Check the stacking position and driving forward to park in the right place.

(7) Ensure that the goods is right above the stacking position, and slowly lower the fork to put the goods in place.

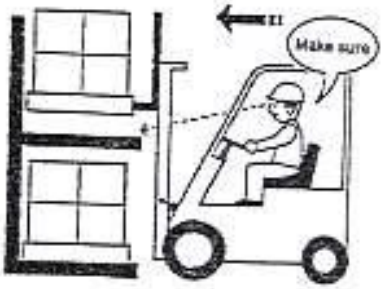

☞ ·When the goods are not fully placed on the shelf or bracket:

a) Lower the fork until it no longer carry any weight.

b) Reverse the forklift for 1 / 4 of the fork length.

c) Lift the fork for 50-100mm, move the forklift forward and stack the goods in the right position.

(8) Observe the rear space of the forklift and reverse the forklift to avoid collision of the fork with the pallet or cargo.

(9) After confirming that the front end of fork left the goods or the pallet, lower the fork to facilitate moving. (l50-200mm away from the ground)

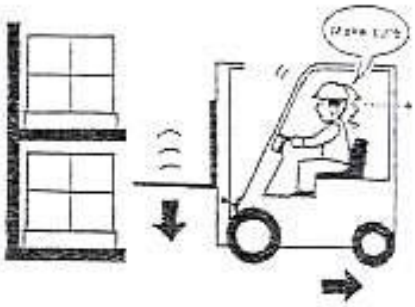

11. Un-stacking

Conduct un-stacking according to the following procedures:

(1) Slow down when close to the goods to be handled.

(2) Park in front of the goods (distance between the goods and fork tip is 30cm).

(3) Adjust forklift position in front of the goods.

(4) Ensure to avoid overloading.

(5) The main frame shall be perpendicular to the ground.

(6) Observe the fork position and move forward the forklift until the fork is fully inserted into the pallet.

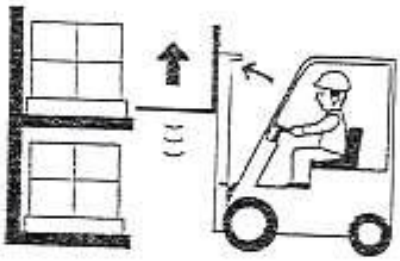

·When the fork can't be fully inserted into the pallet:

a) Insert 3 / 4 of the fork length and lift the pallet a little (for 50-100mm), then pull out the pallet for about 100-200mm, and lower the pallet.

b) Fully insert the fork into the pallet.

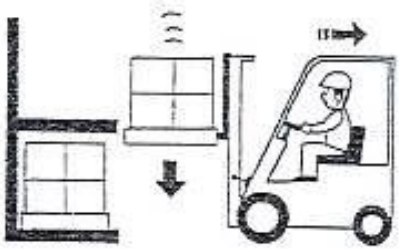

(7) After inserting the fork into the pallet, lift the pallet (for 50-100mm)

(8) Observe the space around and drive the forklift backwards until the goods have been lowered.

(9) Reduce the goods to 150-200mm away from the ground.

(10) Tilt the main frame backward to ensure stability of the goods.

(11) Handle the goods to the destination

12. Storage

(1) Before storage

Prior to storage, thoroughly clean the forklift and conduct inspection according to the following procedure:

a) If needed, clean oil and grease attached to the forklift body with a cloth and water.

b) When cleaning the forklift body, check the overall condition of the forklift. In particular, check if there are dents or damage on the forklift body and if the tires are worn out or embedded with nails or stones.

c) Check for oil leakage.

d) Add lubrication grease if necessary.

e) Check if the wheel hub nuts and joints of the cylinder piston rod is loose, and if the rod surface have bumps or pull marks.

f) Check if rollers of the main frame could rotate smoothly.

g) Raise the lifting cylinder to the highest level to make the cylinder full of oil.

·If you found that the forklift is in need of repair, or it fails or is unsafe, report to the management staff and stop using it until it returns to safe state.

(2)Daily storage

a) Park the forklift in designated areas and use wedge pads to fix the wheels.

b) Place the shift lever in neutral position and pull the parking brake lever.

c) Remove the key and keep in a safe place.

(3) Long-term storage

Conduct the following maintenance and inspection based on "daily storage" maintenance:

a) Park the forklift on a high and solid ground to protect it from flood in rain seasons.

b) Remove the accumulator from the forklift. In humid environment, store the accumulator in a dry and cool place and charge it monthly even if the forklift is parked indoor.

c) Apply rust-proof oil on exposed parts such as cylinder piston rod and shafts that may get rusty.

d) Cover parts from moisure

e) Start the forklift at least once a week. Mount the accumulator, remove the oil and grease on the piston rod and the axis, start the engine and fully warm up, slowly drive the forklift forwards and backwards, and manipulate hydraulic controller for several times.

f) Don’t park the forklift on soft ground such as those paved with asphalt in summer.

(4) Operation of the forklift after long-term storage

a) Remove the moisture-proof covering.

b) Remove anti-rust oil on the exposed parts.

c) Remove foreign bodies and water in the hydraulic tank.

d) Mount the charged accumulator onto the forklift and connect the accumulator plugs.
e) Conduct pre-start check carefully .

Ⅱ. Operation device and use method

1. Diagram on forklift parts and operation device (see below)

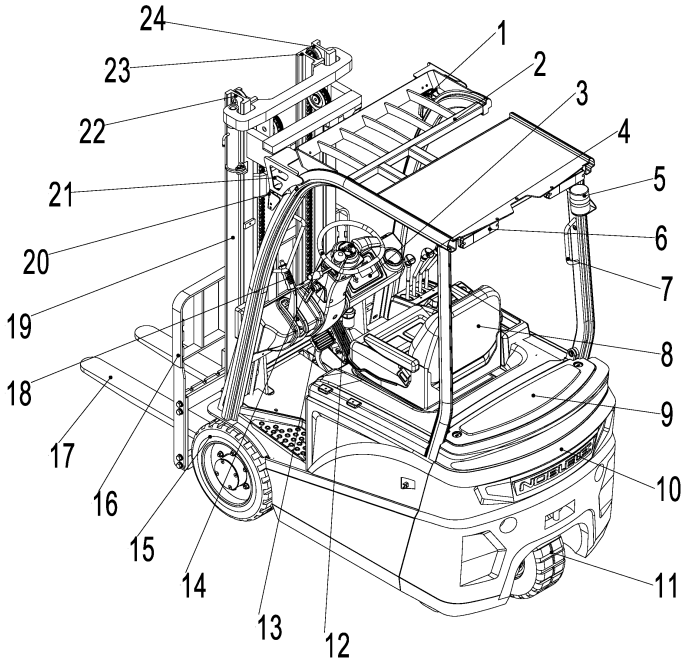

1. rearview mirror	2. overhead guard	3. appearance
4. Multichannel valve joystick	5. caution light	6. rear combined lamps
7. Rear handle	8. seat	9. rear floor
10. balance weight	11. back wheel	12. accelerator pedal
13. Service brake	14. steering wheel	15. front wheel
16. Load-backrest	17. pallet fork	18. parking braking
19. Lifting Cylinder	20. front directional	21. head lighting
22. External gantry	23. inmast	24. composite roller

2. Combination instrument
See4 Electric system
3. Switch parts
(1) Emergency stop switch

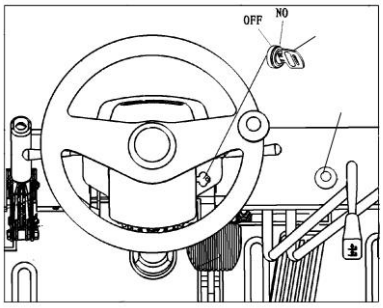

Emergency stop switch

In the event of an emergency, press the red mushroom-shaped button to cut off the control power of the forklift, disabling the walking, turning and lifting operation of the forklift. Rotate the button as indicated by the arrow above the button to restore operation.

(2) Key switch
Key switch can be turned on or off for power control
0FF : The switch is off at this position and keys can be inserted and pulled out.
0N: The switch can be connected and the forklift will start if you rotate forward from the OFF position.

⚠ **• Do not step on the accelerator pedal when turning on the key switch.**

• When you leave the forklift, take out the keys to protect it from being misused.

• After parking the forklift or when recharging, take out the keys to protect it from being misused.

(3) Combination switch

Combination switch is combined by the direction switch, steering lamp switch as well as the switchs of small and big lamps.

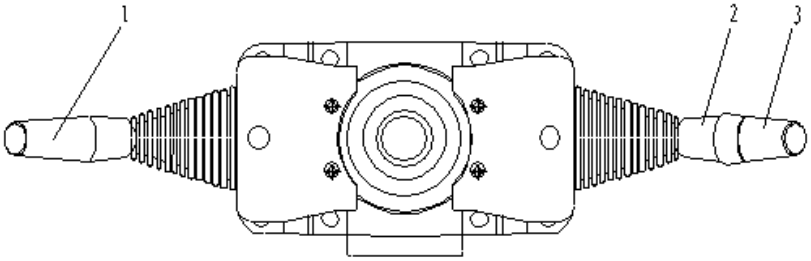

1-Direction switch 2 – Steering lamp switch 3 - Switch of small and big lamps

Direction switch controls the direction the forklift and would convey the signal to the instrument for display. Push the lever to move forwards and pull back it to move backwards. The middle position is the neutral position. When the lever is pulled back for reverse purpose, the reversing lamp and warning lamp will light up and the reversing buzzer sounds.

Steering lamp switch will specify the turning direction. When the switch lever is turned to the steering position, the turning lamp flashes.

Push forward	The left steering lamp blinks
Middle	Neutral position
Pull backwards	The right steering lamp blinks

The switch of small and big lamp controls the lighting and extinguishing of the lamps. The switch has two gears: the small lamp lights up when rotating to the first gear and the small and big lamps light up together when rotating to the second gear.

Gear / Lamp	OFF	First gear	Second gear
Width lamp	×	○	○
Tail lamp	×	○	○
Headlamp	×	×	○

○:lights ON ×:lights OFF

(4)Rear headlight switch

Rear lamp switch is a single gear switch that controls the lighting and extinguishing of the rear lamp. Pull the switch to light the lamp and push it to distinguish the lamp.

4. Control parts

(1) steering wheel ① and lever ball② of the steering wheel

The steering wheel can be operated in usual way, namely, when rotating the steering wheel rightwards, the forklift will turn right; Vice versa. Steering wheel is mounted at the rear side of the forklift, enabling the forklift rear part to swing out during turning.

During turning, grasp the lever ball of steering wheel with your left hand while place the right

hand on control lever of the multiple unit valve or steering wheel.
Hydraulic steering system and tilt device of the steering wheel are standard equipments on the forklift.

☞ • **Adjust the steering wheel to the best angle according to the driver's position.**

• **After adjusting the tilt steering wheel, lock steering column with star-shaped lever③ .**

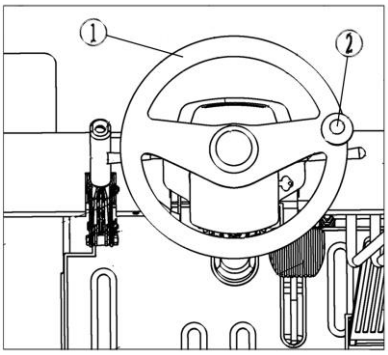

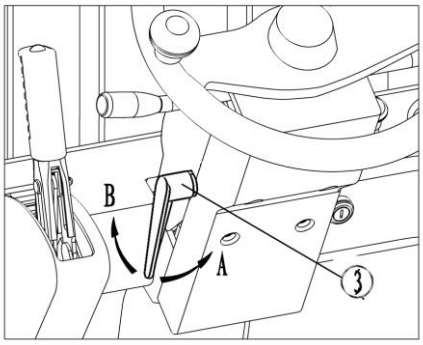

(2) Horn button ④

Press the rubber cover in the centre of the steering wheel to make a buzzing sound. The horn can sound even when the key switch is closed.

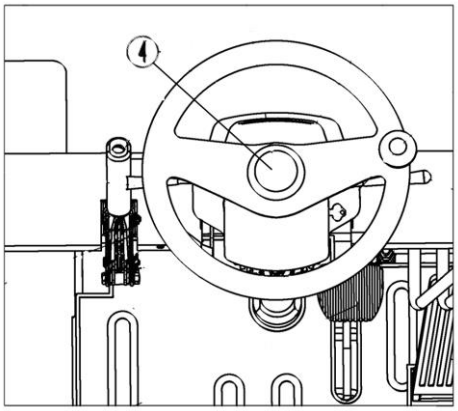

(3) Direction switch lever ⑤

Indicating the direction of travel.
Moving forward (F): push forward the lever and depress the accelerator pedal.
Moving backward (B): pull back the lever and depress the accelerator pedal.
When parking the forklift, place the direction switch lever in the neutral position (N).

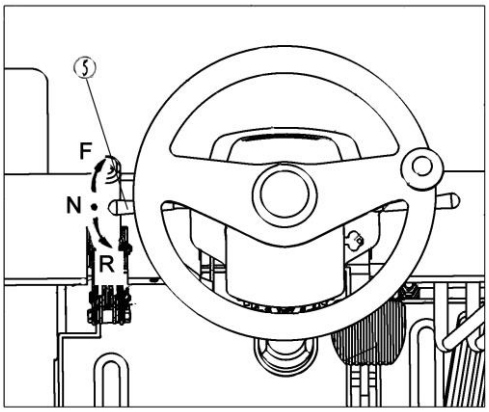

(4) Parking brake lever ⑥

To prevent moving of the forklift, fully pull back parking brake lever when parking the forklift. Push forward the parking brake lever to its maximum level before driving.

⚠ **• When operating the parking brake lever, depress the brake pedal.**

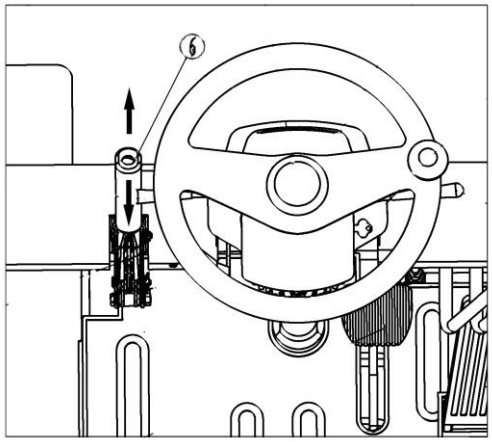

(5) brake pedal ⑦ and accelerator pedal ⑧

⚠ **• Do not slam on the accelerator pedal, otherwise the forklift will suddenly start or accelerate.**

•Before depressing brake pedal, make sure to remove the foot from the accelerator pedal.

From left to right, respectively, the brake pedal⑦ and accelerator pedal⑧.

Depresses the accelerator pedal slowly and the speed of forklift depends on how much the accelerating pedal has been depressed.

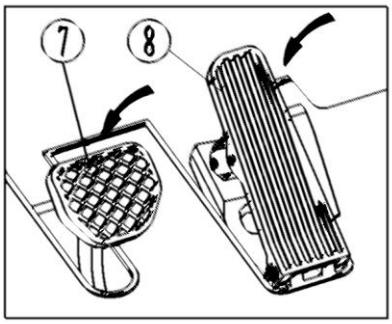

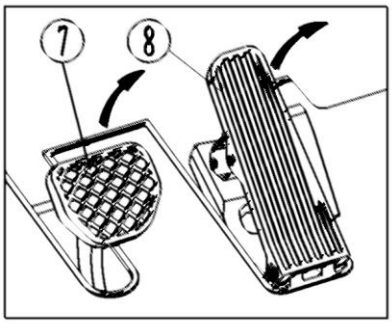

(6) Lifting lever ⑨

Pull back the fork lever to lift the fork and push forward the fork lever to lower the fork. Lifting and lowering speed can be controlled by the tilting angle of the lever . The greater the angle is, the greater the speed will be.

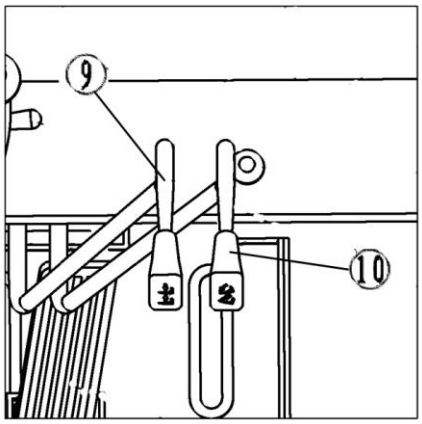

⚠ **• If you push or pull the lever when turning on the key switch, the fork will not lift.**

• Do not suddenly reduce the fork or suddenly stop lowering the fork.

(7) Tilt lever ⑩

The main frame will tilt backward when pulling the tilt lever backward and tilt forward when push the lever forward. Speed of titling forward and backward can be controlled by the tilting angle of the lever . The greater the angle is, the greater the speed will be.

⚠ **• If you push or pull the lever when turning on the key switch, the fork will not tilt.**

5. Forklift body

(1) Seat

By adjusting the lever , the operator can tune the seat position for greater comfort.

Pull the lever upwards to activate the adjustment function. After completing adjustment, try to move the seat back and forth gently to confirm if the seat has been locked.

Adjustment range of seat position is within 120mm. When driving on dry concrete ground, the seat will exert a vertical acceleration on the driver at the speed of 2.130m/s-2.237m/s and the integrated acceleration is 2.252m/s-2.356m/s.

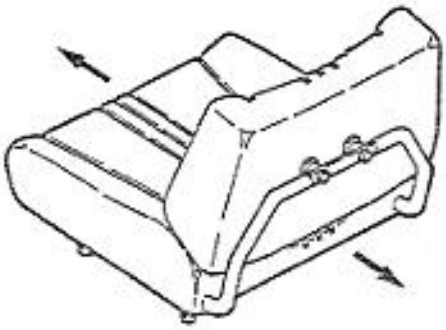

(2) Overhead guard

⚠ **·Overhead guard is a import component that prevent falling of objects overhead and protect the operator's safety.**

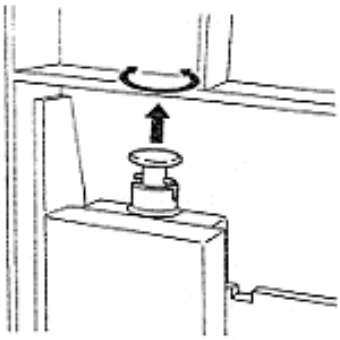

The size of a opening in overhead guard is more than 150mm. If the cargo size is less than 150×150mm, additional protective measures must be adopted to prevent accident falling of the cargo. Unsteady installation, removal or transformation before use are all dangerous actions that may lead to major accidents.

(3) Back-rest

⚠ **·Back-rest is an import security component that prevents falling down of cargo on the fork to the operator. Unsteady installation, removal or transformation before use are all dangerous actions.**

(4) Traction Pin

Traction pin is only applicable to the following occasions:

• When the forklift can not move (such as tires sank into a side ditch, etc.);

• When the forklift is to be loaded or unloaded from a truck.

⚠ **• Never use it for towing or towed operation.**

(5) Locating pin of the fork

The locating pin can lock the fork in a certain position. To adjust the fork spacing, pull up the location pin and turn it for l/4 cycle. Then, adjust the fork to the required position. Fork spacing should be adjusted based on the goods to be loaded.

⚠ **·Based on the principle that gravity center of goods shall be consistent that of the fork, operators shall adjust the spacing until the spacing to left side and to the right side are the same. After adjusting, fix the fork with the location pin to make it immovable.**

·When adjusting the fork spacing, lean your body against the back-rest. Stand still and push the fork with your feet. Never adjust spacing by hands.

(6) Foot pedal and handrail

The foot pedal is located at left side of the forklift and the handrail is on the left front strut of the overhead guard. Use the pedal and handrail when on-boarding and de-boarding the forklift to ensure safety.

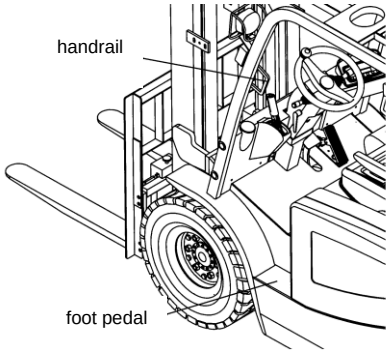

(7) Lighting

The front of the forklift is equipped with front headlights and front combination lights (steering lamp, parking light, width light). The rear of the forklift is equipped with combination lamps which include taillight, steer lamp, brake light, parking light, reverse light and flasher.

⚠ **• Check the working conditions of lights, if the lamps are burned, damaged or dirty, replace or repaired immediately.**

(8) Rear view

Rear view is installed at the right side of the front beam on the overhead guard.

⚠ **• Keep rear view surface clean.**

• The rear view can be adjusted to a position allowing complete rear view.

(9) Accumulator plug

Accumulator plug is used to connect or disconnect the accumulator and forklift's electrical components. Generally connection operation is more common。

⚠ **• If you have to touch the internal electrical components, disconnect the accumulator plug first to prevent danger.**

• Voltage still exist in the main circuit even if the key switch at the "0FF" position. If you want to cut off the main power, please pull the plug.

• If the accumulator plug is disconnected during driving process, steering will be disabled. So never unplug the accumulator unless circumstance requires.

Ⅲ. About safety

Ensure safety is your business and responsibility. This section describes the basic safety regulations and warnings during use of the forklift, but also applicable to forklifts with special specifications and with the main frame and accessories.

1. Site and working environment of the forklift

(1) Ground conditions

The forklift should used on solid ground in well-ventilated environment.

Forklift performance depends on the road condition. Running speed should be adjusted to an appropriate level. Be especially careful when driving on ramps or rough roads. When driving on ramps or rough roads, the forklift will speed up, increasing tire wear and the noise.

(2) Working environment

Ambient temperature for use of the forklift should be within -20 °C ~ 40 °C and the ambient humidity shall be less than 80%.

(3) Weather conditions

In days of fog, rain, snow and strong winds, pre-assess the safety of using the forklift. It's better not to use it for outdoor operations. If it is must be done, be extremely cautious during driving and operation.

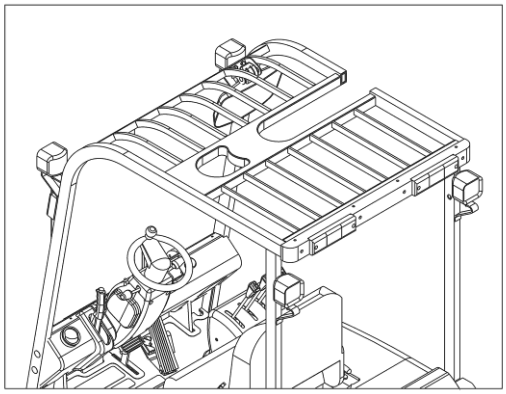

2.Safety rules

Only trained personnel who owns a driving license of forklift could operate it!

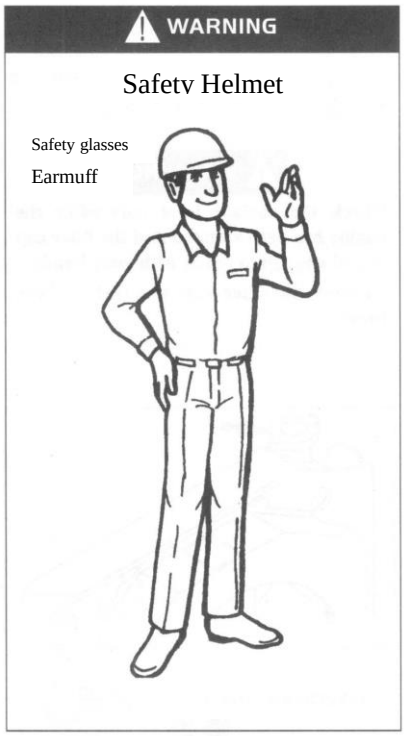

Driving on highways are prohibited!

Drivers shall wear working clothes before driving!

Alert: seek medical aid in case of injuries!

Don’t change forklift parts without permission!

Please read the instructions before operating the forklift!

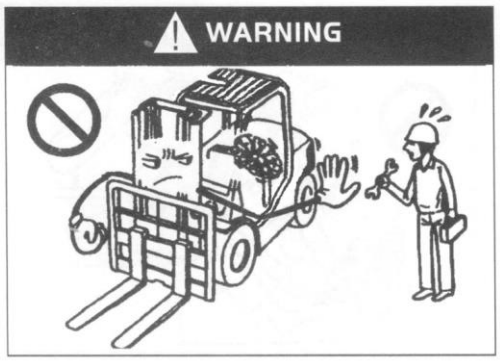

Turn off the engine before maintenance!

Understand the traffic rules!

Check the forklift before use!

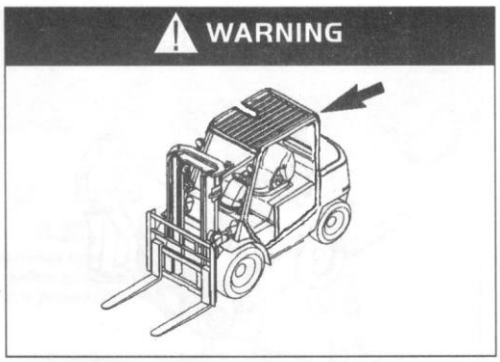

Do not move the overhead guard!

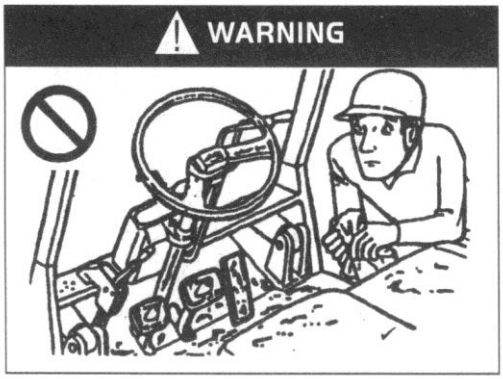

keep the cab clean!

Do not drive an unsafe forklift!

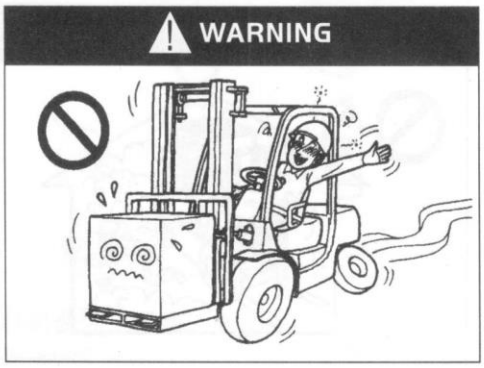

The driver should be healthy!

Make sure that your forklift is safe!

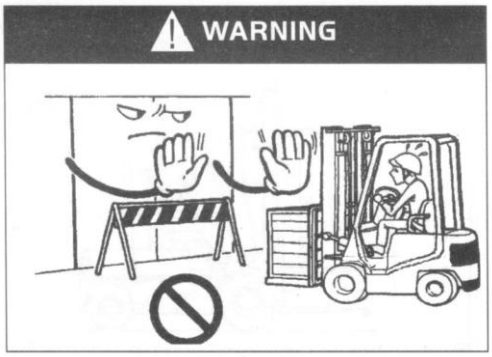

Work within the permitted scope!

Do not drive damaged forklift!

Hold the handrail during on-boarding

Start the forklift in a correct way!

Adjust the seat before driving!

Make sure that your forklift is under safe working condition

Appropriately fasten the seat belt!

Always pay attention to the height of the working area of forklift!

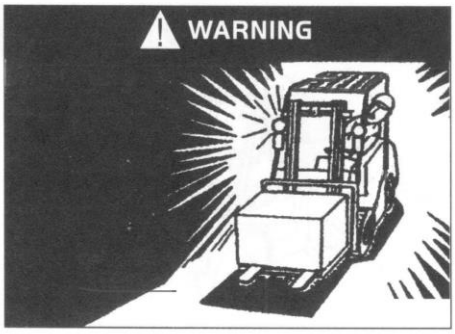

Turn on the lights in dark areas!

Do not expose your arm and body outside the overhead guard!

Avoid driving on soft or unprepared ground . Drive on flat and solid surface!

Keep the body under the overhead guard!

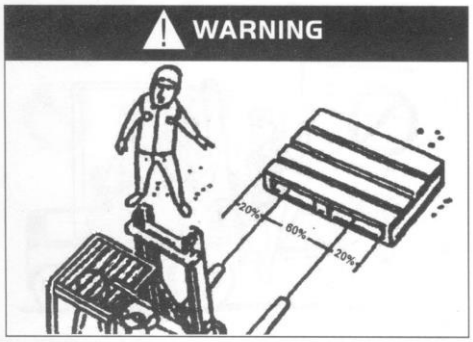

Avoid eccentric loading!

Pay attention to keep the projecting fork clear from goods ahead!

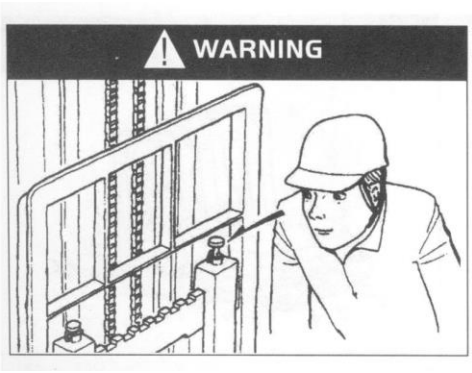

Check the position of the location pin!

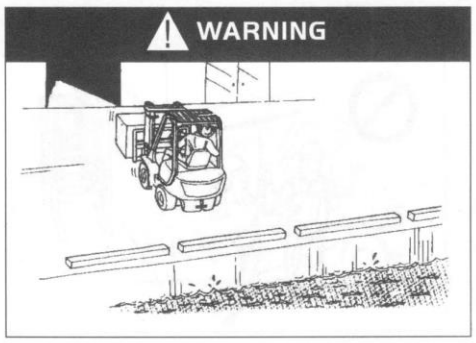

Check the safety of working areas!

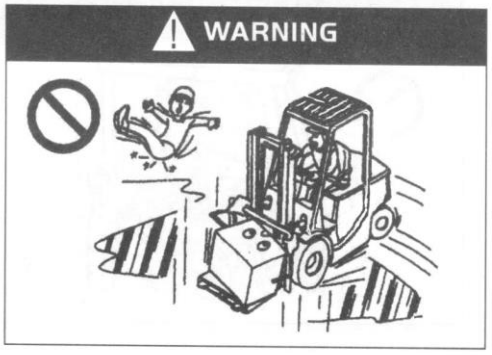

Don’t drive on smooth or slippery ground!

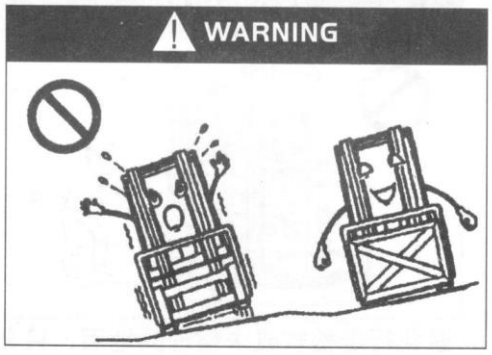

Ensure the lateral driving stability when the forklift is running without load!

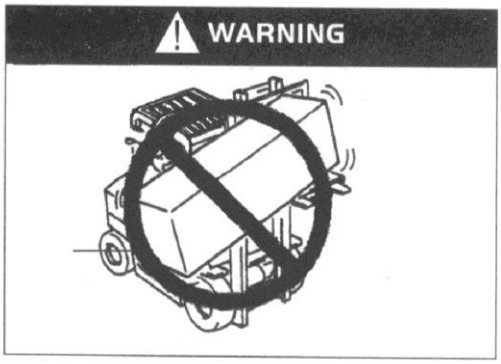

Be especially careful when handling goods with relatively large length or width!

Carrying passengers is absolutely prohibited!

During turning, please slow down and

Use the appropriate pallets or sleeper

blow horns if you can't see the roads clearly!

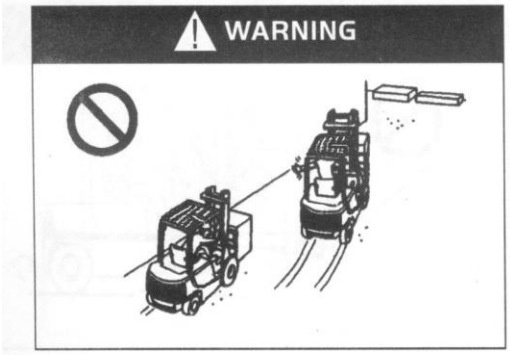

when handling small objects!

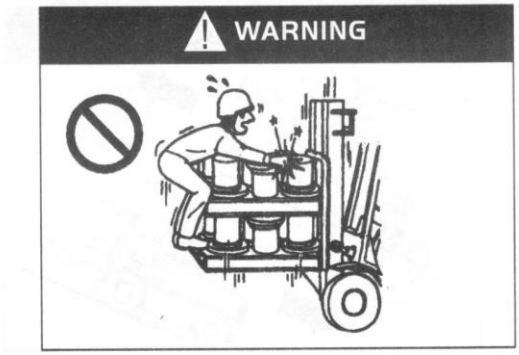

Do not chase each other driving across the road!

No one shall stand on the goods!

Looking around is not allowed while driving!

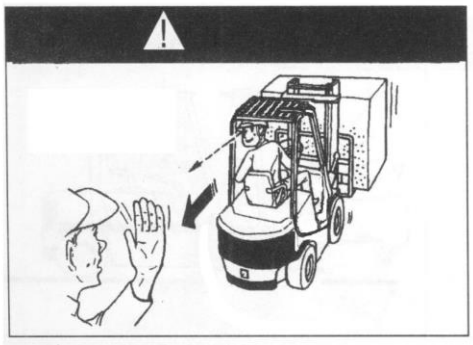

Do not do stunt with the forklift!

If the loaded cargo is too high and blocks your eyesight, drive reversely.
or under the guidance of other people!

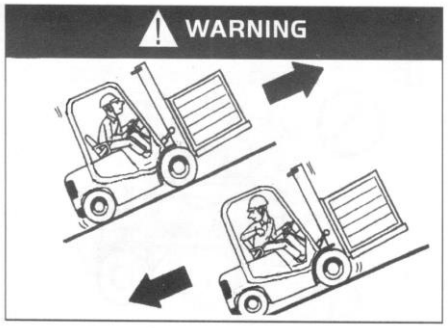

Obey the traffic rules and all warnings and signs!

When carrying load, move uphill facing the ramp and move down-hilling by driving in reverse!

During up-hilling process, pay attention to steep ramp and the lifting height of the

goods!

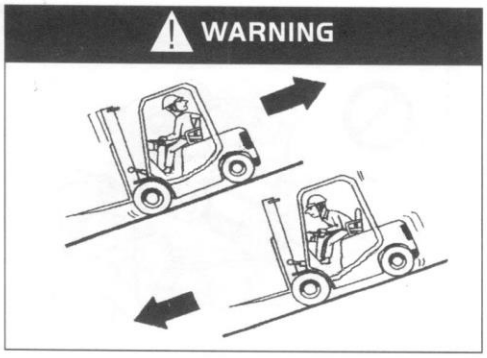

When carrying no load, move uphill by driving in reverse the ramp and move downhill facing the ramp!

Perform braking when starting on the ramp!

Turning on the slope is not allowed!

Blow the horn when there are people walking ahead!

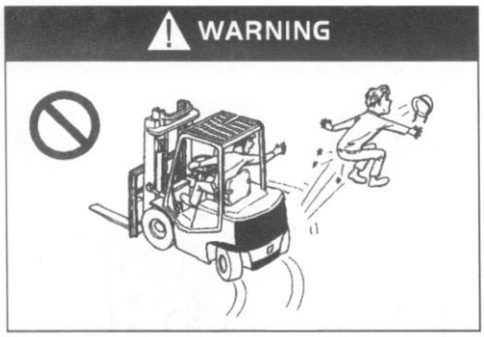

Avoid collision with people or objects during turning!

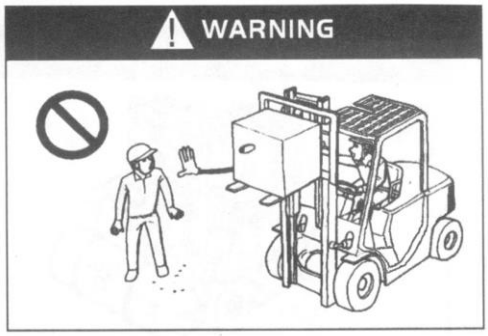

Keep clear of other persons during working of the forklift!

High speed during turning will cause

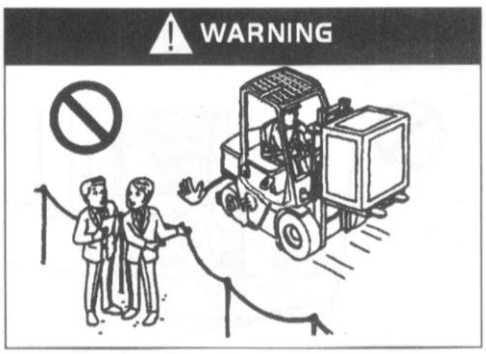

Pedestrians are forbidden within

workingoverturning due to unstable centre of gravity!

Changes in the rated capacity of the forklift should be noted!

area of the forklift!

Always pay attention to the areas around when driving the forklift!

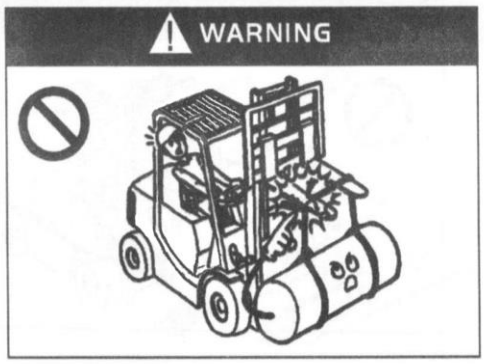

Please use the fork for loading!

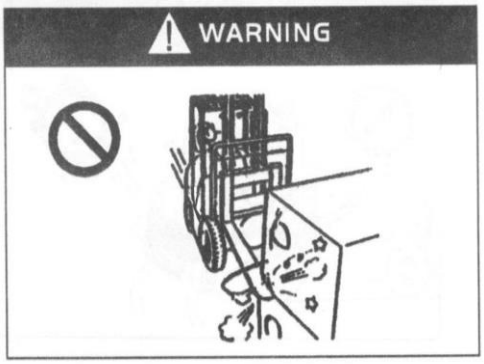

Slow down when loading!

Please do not move the forklift when there are people standing in front of it!

No one shall walk or stand below the elevated fork!

Never load cargo with a height higher than the

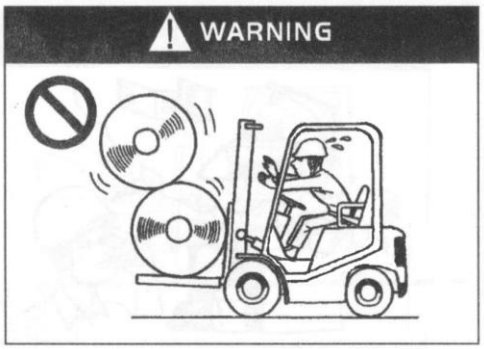

For goods difficult to fixed, bundle them

back-rest!

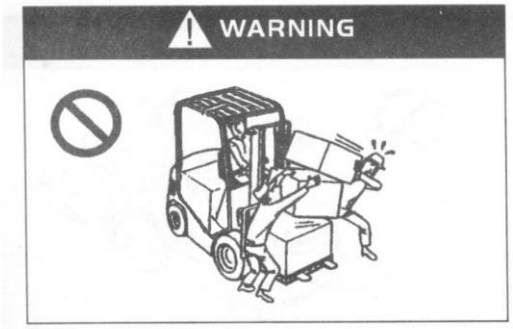

Goods have not been loaded from the forklift shall not be handled!

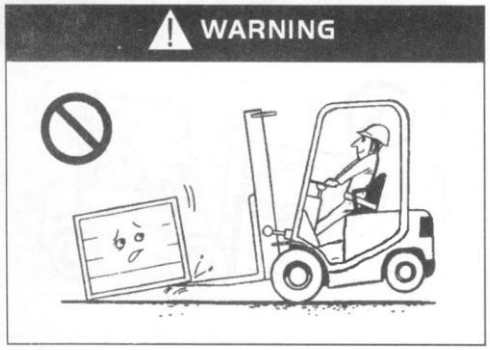

Abuse of the fork is not allowed!

Never carry people!

Do not stretch any part of the body out of the

before loading!

Do not carry damaged goods cases by your shoulders!

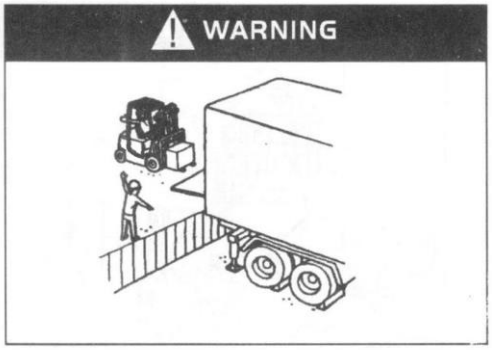

Be careful when loading the goods onto cars!

Do not abuse the forklift!

Drive smoothly. Sudden acceleration and

forklift!

Special safety equipment shall be used when carry out manned operation

slow down is not allowed!

Do not overload!

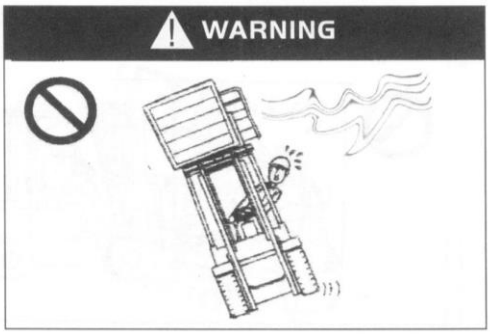

Lifting is not allowed when it is too windy!

Operating in an explosive environment is not allowed!

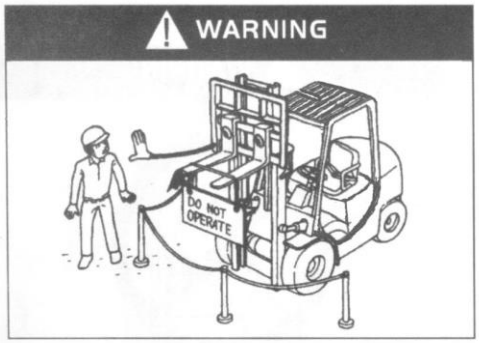

Damaged forklifts need to be placed in designated areas!

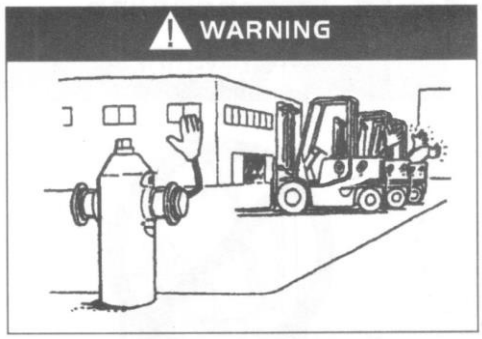

When not in use, the forklift shall be parked in designated areas!

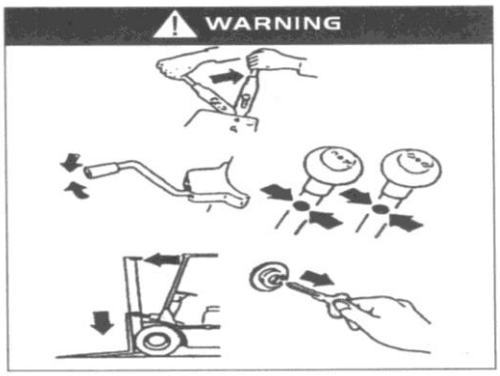

It is prohibited to park the forklift on a slope!

When you do not use the forklift:

—Brake
—Place the direction lever at the netural position
—Lower the fork to the ground.
— Tilt the main frame forward
— Remove the key

3. Transportation of the forklift

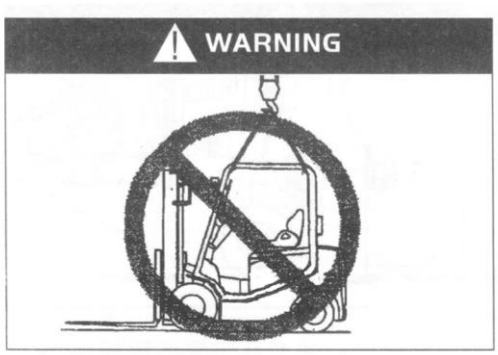

Lifting from the forklift top is prohibited!

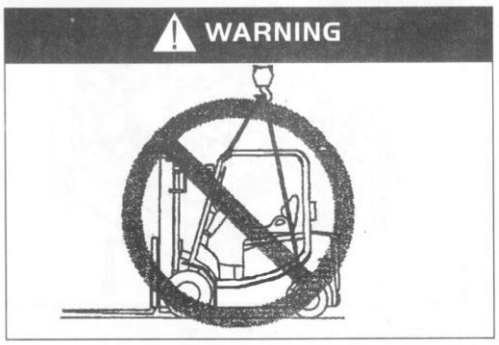

Lifting from the forklift frame is prohibited!

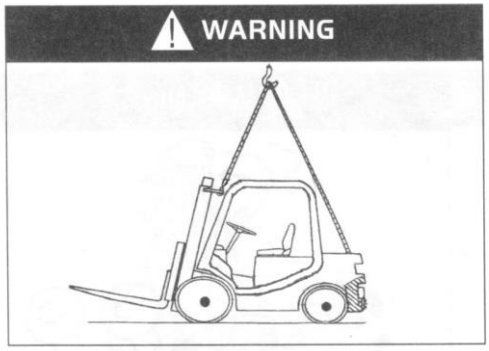

Lift the forklift correctly when handling goods!

Lift the forklift

·Fasten the steel wire to the holes at the two ends of the outer frame beam and to the counterweight hook, and then hoist the fork by using the lifting equipment. And the steel wire connected to counterweight shall pass through overhead guard notch and shall not exert force on the overhead guard.

⚠ **• When lifting the forklift, be sure the steel wire is not twisted around the overhead guard.**

• The steel wire and lifting devices shall be firm enough to support the forklift safely, because the forklift is extremely heavy.

• Do not use the cab frame (overhead guard) to lift the forklift.

• When lifting the forklift, do not stay underneath the forklift.

4. How to avoid rollover and protect yourself

To avoid tipping, tilting forward to lift the load is forbidden!

Tilted loading of the goods is prohibited!

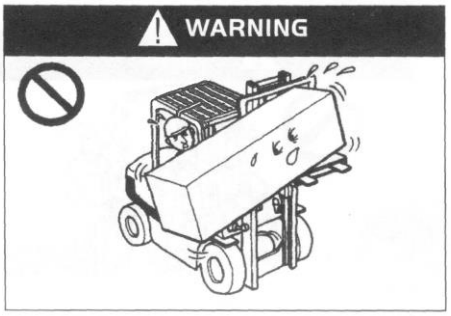

Eccentric loading of the goods is prohibited!

Avoid driving on slippery surface!

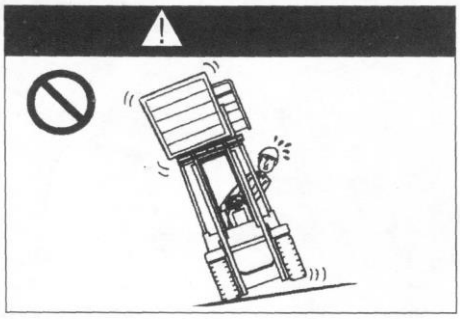

Do not load or unload if the forklift is not on a level ground!

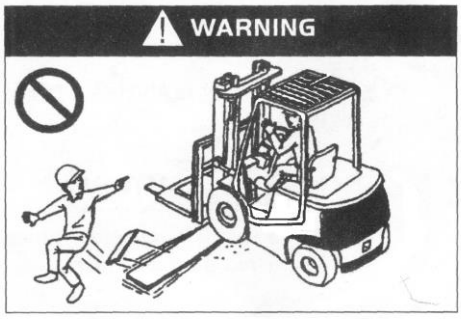

Do not drive over trenches, other obstacles that cause tipping!

During driving, the distance between fork and the ground shall be within 150mm to 200mm!

Avoid fast and wide turning no matter carrying load or not!

When the empty fork is lifting, please turn within a narrow range to avoid tipping!

Be sure to fasten your seat belts!

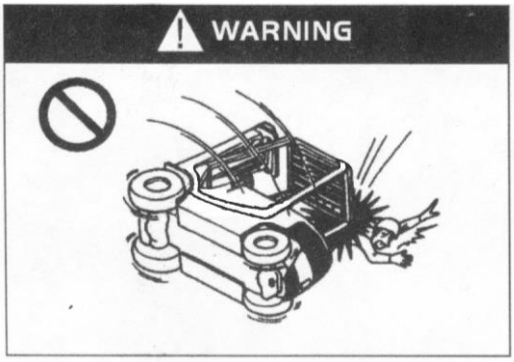

In the event of forklift tipping, please do not jump!

Please wear a helmet while driving!

In case of tipping, it is safer when you stayed in the forklift with seat belt than jumping out of the forklift. If the forklift begins to tip:

1. Step on the brake pedal and clench the steering wheel tightly.
2. Do not jump.
3. Bend your body to the opposite direction of tipping.
4. Tilt your body forward。

5. Safety issues during maintenance and protection

(1) Maintenance location

• The premise should be designated places that can provide enough equipment and security facilities to the service organization.
• The site should be level ground.
• The site should be well ventilated.
• The site should have fire-fighting equipment.

2) Precautions before maintenance

• No smoking.
• Wear all kinds of protective equipments (helmets, shoes, glasses, gloves and boots) and appropriate clothing.
• Timely and wipe out overflowed oil.
• Use a brush or cloth or clean dust or dirty oil before adding lubrication oil.
• Turn off the key switch and pull out the accumulator plug except for some certain cases.
• Lower the fork to the ground before carrying out maintenance of forklift.
• Use compressed air to clean electrical components.

(3) Precautions on care and maintenance

• Take care not to put feet below the fork and not to be tripped by the fork.

• When upgrading the fork, use pads or other things as cushion below the main frame to avoid sudden drop of the fork and main frame.

• Take care to open and close the front chassis and accumulator cover plate, so as not to pinch fingers.

• When your job can't be completed within a day, make a mark to continue work next time.

• Use right tools and never use makeshift tools.

• Because of the high pressure of hydraulic circuit, never carry out maintenance work before the internal pressure of oil circuit is reduced.

• When injured by high-voltage electricity, immediately seek medical treatment.

• Do not use the main frame assembly as a ladder.

• Do not put your hands, feet and body between the forklift frame and the main frame assembly.

(4) Inspection and replacement of tires

• Removal and installation of tires must be operated by professionals.

• Handling of high-pressure air shall be done by professionals

• Wear a goggle when using compressed air.

• During disassembling of tires, do not loose bolts and nuts at rim connection. As there is high-pressure gas within the tires, looseness of bolts, nuts and rims could cause danger.

• Before removing bolts and nuts at the rim connection, you must first exhaust the high pressure gas within the tires with special tools.

(5) Use of jack (replace the tires)

• When jacking up the forklift, do not keep any part of your body below the forklift.

• When jacking up the forklift, ensure that there are no one and no load in the forklift.

• When the forklift wheels are lifted off the ground, stop use the jack and place pads below the forklift to protect it from falling down.

• Take measures to prevent the forklift from sliding before jacking up the forklift.

(6) Requirements on waste discharge (electrolyte liquid, oil, etc.)

·Waste parts on the forklift (plastic parts, electrical components, etc.) and waste liquid (hydraulic oil, brake fluid, etc.) should be recycled according to the local regulations rather than discharged。

6. Safety during accumulator use

(1) No smoking

·The accumulator can produce hydrogen. Spark will generate in case of short-circuit and lit cigarette near the accumulator may cause explosion and fire.

(2) Prevent electric shock

⚠ **• The accumulator has high voltage, so when you perform installation and maintenance, do not touch the accumulator conductor, which can cause serious burns.**

(3) Correct connection

⚠ **• When the accumulator is charging, ensure the positive and negative poles are not reversed, otherwise heat, fire, smoke or explosion may be caused.**

(4) Never place metal objects on the accumulator

⚠ **• Avoid reversed installing of the positive and negative bolts or tools, which may lead to short-circuit occurs, causing injury and explosion.**

(5) Avoid excessive discharge

⚠ **· Do not keep using the forklift until it can not move, otherwise the accumulator life will be shortened. If the accumulator capacity alarm indicator flashes continuously, it means that the accumulator needs to be recharged.**

(6) Keep clean

⚠ **• Keep cleanness of accumulator surface**

·Do not use a dry cloth or chemical fiber cloth to clean the accumulator surface. Do not use polyethylene film to cover the battery.

• Static electricity can cause an explosion.

• Clean the uncovered parts at the top of the accumulator with a damp cloth.

(7) Wear protective clothing

⚠ **• During maintenance of the battery, you should wear goggles, rubber gloves and rubber boots.**

(8) Accumulator electrolyte could be harmful

⚠ **• Accumulator electrolyte is made of dilute sulphuric acid. Be careful when handling.**

• When the electrolyte adheres to skin and clothing or touch your eyes, it will result in vision loss or serious burning.

(9) Emergency treatment

⚠ **When an accident occurs, perform following emergency treatment and contact a doctor immediately.**

• spilled on skin: rinse with water for 10-15 minutes.

• spilled in eyes: rinse with water for 10-15 minutes.

• contamination in large area: use soda (sodium bicarbonate) or clean with water.

• Ingestion: Drink plenty of water or milk.

• spilled on clothing: immediately take off the clothes.

(10) Put on the accumulator top cover

⚠ **• Put on accumulator top cover tightly to prevent electrolyte leakage.**

• Do not add too much electrolyte, otherwise the electrolyte will overflow and cause current leakage.

(11) Waterproof

⚠ **• The accumulator can not be wet by rain or sea water, otherwise the accumulator will be damaged, causing fire.**

(12) Abnormality of accumulator

⚠ **When the following problems occur to the battery, please contact our sales department:**

- **Accumulator stinks.**
- **The electrolyte gets dirty.**
- **The electrolyte temperature gets higher.**
- **The electrolyte volumes reduce quicker than normal .**

(13) Prohibiting disassembling

⚠ **• Do not drain the electrolyte from the battery**

- **Do not disassemble the battery.**
- **Do not repair the battery.**

(14) Storage

⚠ **• When the accumulator is to be unused for a long time, it should be stored in well-ventilated places with low possibility of fire.**

(15) Disposal of waste battery

⚠ **• Contact our sales department for disposal of waste battery.**

7. Lables

Labels posted on the forklift are used to illustrate the use and precautions of it. They are for the benefits of both you and the forklift. Immediately re-paste the labels if they fall off.

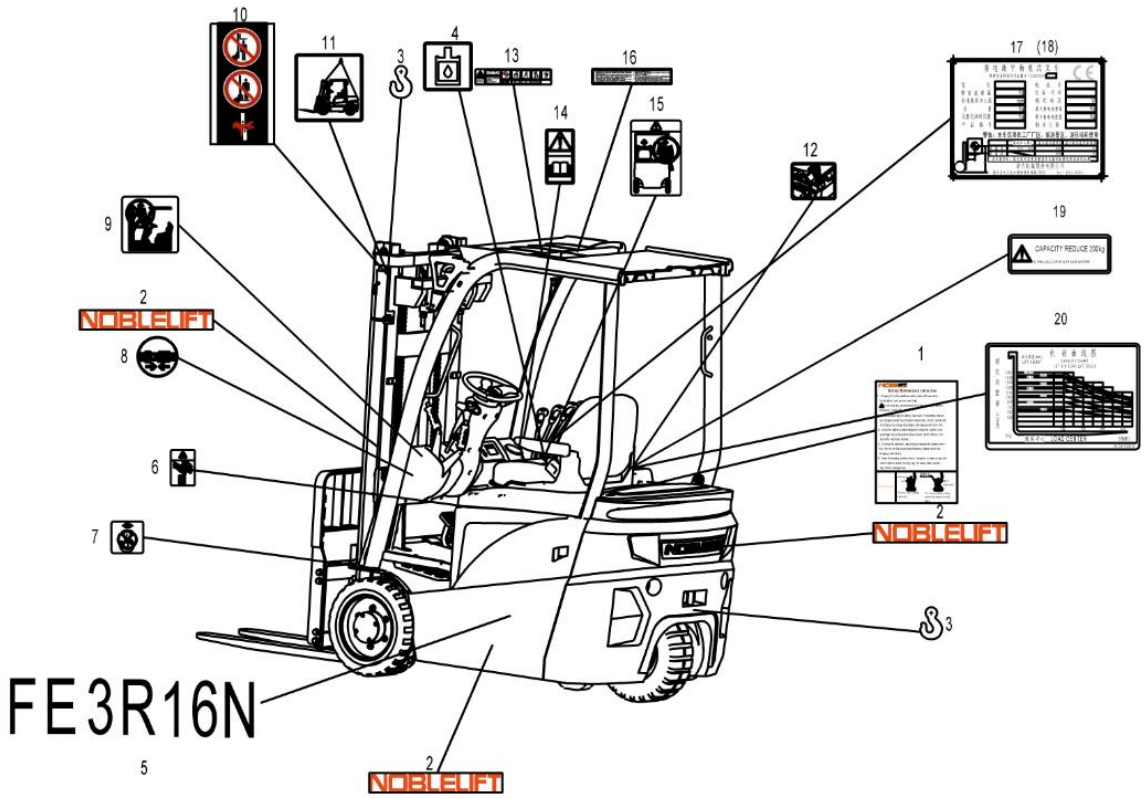

1. Battery Maintenance
2. NOBLELIFT
3. Hoisting
4. Hydraulic oil
5. Product model
6. Hand squeezing
7. Prohibition of lifting
8. Safety belt
9. No Climbing
10. Safety label
11. Whole car hoisting
12. Battery box cover opening
13. Safety marking against rollover
14. Prompt sticker
15. Forbidden seat holder
16. Safety marking against rollover
17. Data plate
19. Sideshift and weight reducing
20. curve of load

Chapter IV Periodic inspection and maintenance

Conduct a comprehensive inspection of forklift to avoid failure and to extend its service life. Service hours indicated in the Maintenance Procedures is based on the assumption that the forklift

works 8 hours a day and works 200 hours a month. In order to ensure safe operation, maintain the forklift regularly according to the maintenance procedures.

Routine maintenance and repair work shall be carried out by the forklift driver and other inspection and maintenance work shall be done by professional maintenance personnel.

Ⅰ. Check before operation

In order to ensure safe operation and to keep the forklift in good condition, please undertake the statutory duty to conduct a comprehensive inspection of the forklift before operation. If any problems are found, please contact the sales department of our company.

• A small fault will cause a major accident. Don't operate or move the forklift before the completion of repair and inspection work.

• Conduct checking the forklift on a platform.

• Before checking the electrical system of the forklift, turn the key switch off and unplug the accumulator before check.

• Improper handling of waste oil (such as dumping into water pipes, soil, or burning them) will cause pollution to the water, soil and air, thus are strictly prohibited.

1. Check points and contents

	No.	Check points	Check contents
Braking system	1	Brake pedal	Travel distance and braking force of the foot brake pedal
	2	Brake oil	Quantity and cleanliness
	3	Parking brake	Travel distance and braking force of the parking brake lever
Steering system	4	Manipulation of steering wheel	Tightness, rotation, forward and backward movement
	5	Manipulation of hydraulic steering	The operation of all components
Hydraulic system and main frame	6	Features	Function, cracks and lubrication status
	7	Pipeline	If the oil pipeline leaks
	8	Hydraulic Oil	Appropriate oil volume
	9	Lifting chain	Tightness of the left and right chains should be the same
Wheels	10	Tires	Pressure size and if there is any damage or abnormality
	11	Rim nut	Firmly tighten it
Accumulator	12	Charging	Check the display status of accumulator capacity, the specific gravity and firm connection of the plugs
Lights, horn and switches	13	Headlights, tail lamps, reversing lamp, steering lamps, horn and emergency power off switch	Switch on and off the lamps to see if they can light up. Press the horn button to see if the horn could sound and check if the emergency power off switch is normal.
Inspection and displaying lamps	14	Features	When the key switch is turned on, it should display "normal test state"
Others	15	Overhead guard, backrest	If the bolts and nuts are tightened
	16	Nameplate and labels	Completeness

	16	Other parts	If there is abnormality

2. Check the procedure

(1) Check the foot brake pedal ⑦

Check the braking status. Ensure that if the brake pedal is fully depressed, the travel distance of the brake pedal
should be more than 50mm, and the braking distance of no-load forklift shall be about 2.5m.

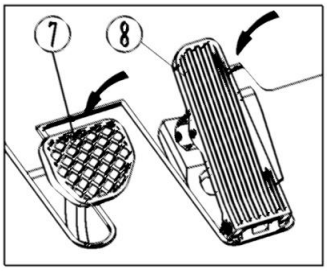

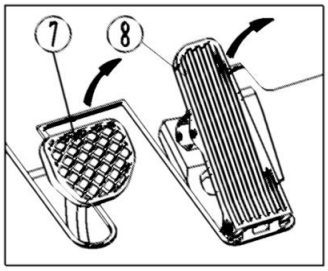

(2) Check brake fluid

⚠ **• Open the oil cup cover and check the quantity of brake oil and other conditions.**

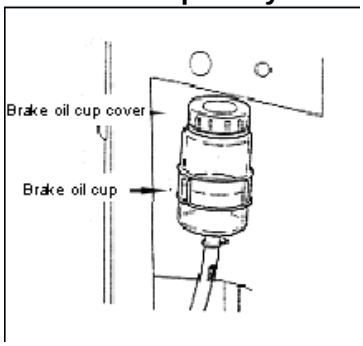

(3) Check the parking brake lever

Push forward the parking brake lever and check the following items:

• If the pull distance is appropriate.
• Degree of braking force.
• If the parts are injured .

If the operator find the manipulation force of the lever(standard force is 17-22kg) approprate. Operators can adjust the screw at the top of the lever.

Parking brake lever

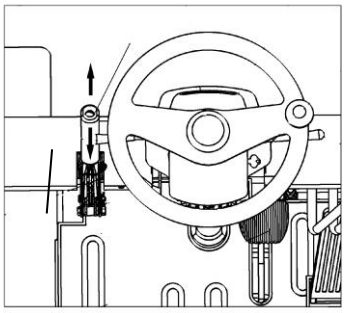

(4) Check the rotation of the steering wheel

Gently rotate the steering wheel clockwise and counterclockwise to check if rebound occurs. The suitable travel length for rebound
shall be 50-100mm. The travel length of steering wheel when moving forwards and backwards are about 7°.If the actual travel length falls within the scope, rotation of the steering wheel can be

deemed as Normal.

Rebound stroke
50—100mm

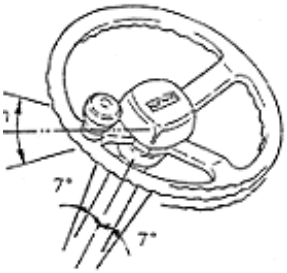

(5) Check the ature

Rotate the ste wise and counter-clockwise, and check the working condition of the power steeri..g.

(6) Check the hydraulic system and the function of main frame

Check if the operations of lifting, tilting forward and ackward are normal and smooth.

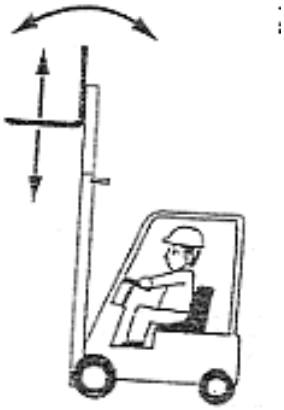

(7) Check the oil pipe

Check the lifting cylinder, tilting cylinder and all the piping for oil leakage.

(8) Check hydraulic oil

Lower the fork to the ground and check the oil level of hydraulic oil with a gauge. If the oil level is within the range of H to L, the hydraulic oil volume is appropriate.

(9) Check the lifting chain

Lift the fork to 200-300mm away from the ground and ensure that the tightness of left and right chains are the same. Check whether the finger lever is in the neutral position. Adjust the chain joints in case of difference in

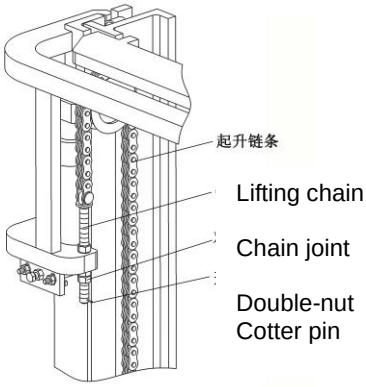

tightness.

⚠ **• Double-nut should be tightened after this adjustment, .**

(10) Check the tires (solid tire)

Check tires and the side surfaces for damage or cracking, and then check the wheel rim and the lock ring for deformation or damage.

(11) Check the rim nuts

⚠ **·Looseness of rim nuts could be very dangerous as it may lead to falling off of wheels and overturning of the forklift. Check all the rim nuts for looseness. Make sure they have been tightened to the specified torque to avoid danger.**

Tightening torque of the rim nuts:

the rim nuts： 130-150N．m

(12) Check the charging status

Measure the specific gravity of the battery. If the specific gravity of the accumulator is 1.275 to 1.285 when the accumulator is switched to 30 ℃, indicating that the accumulator is fully charged. Check for loosening of terminals and check cables damage.

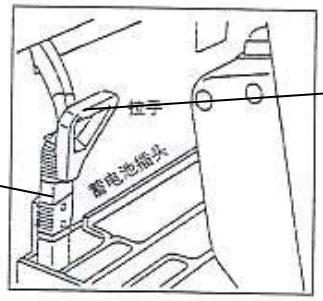

(13) Check the front headlight, steering lamp and the horn

Check if these lamps could light up normally and if the horn can sounds normally (checking by pressing the horn button).

Check the emergency stop switch.

L	Left steering lamp lights up

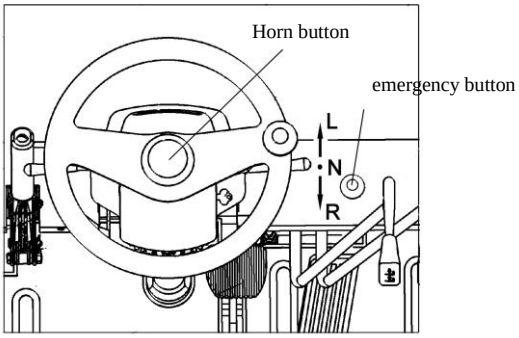

N	Neutral position
R	Right steering lamp lights up

(14) Check instrument panel

Under normal circumstances, the instrument panel will displays as below within a few seconds after turning on the key switch.

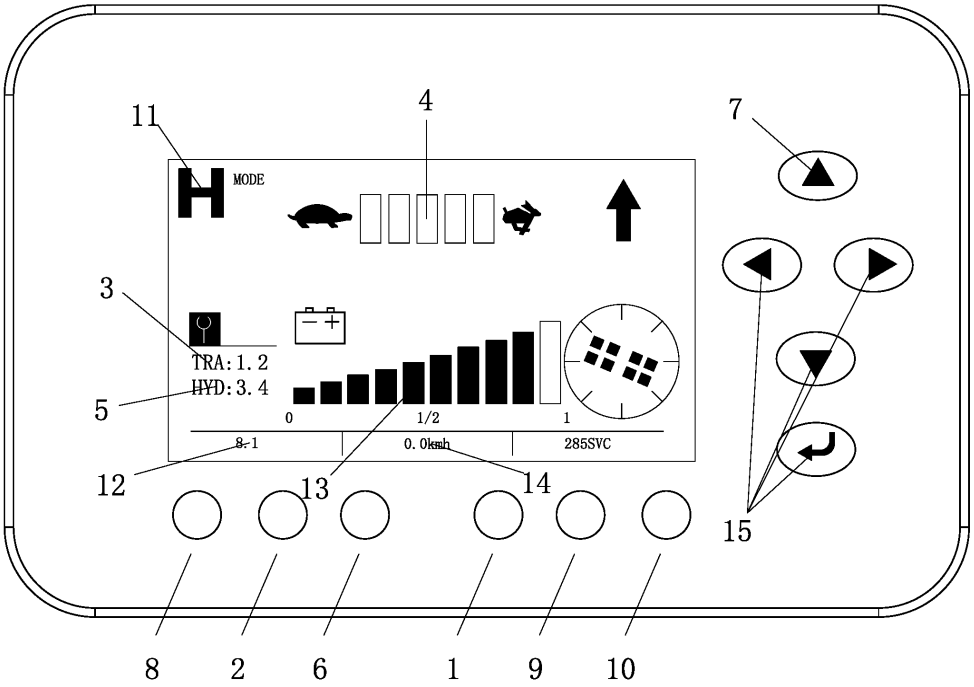

1. Tips locking instructions
2.parking brake insdicator
3.traction controller fault code
4.speed mode
5.oil pump controllerfault code
6.it's tome for maintanance
7.mode selection
8.slow speed mode
9.seat switch indication
10.electric quantity alarm indication
11.gear neutral indication
12.timing indication
13. electric quantity indication
14.speed indication
15.Model transformation and the parameter value adjustment buttons

15) Check the overhead guard and backrest
Check the bolts or nuts for looseness.
16) Check the integrity of the labels
17) Others
Check for abnormalities on other components.

⚠ **• In addition to checking of the lights and operating conditions, turn off key switch and unplug the accumulator before check the electric system.**

Ⅱ.Checking after operations

After work, remove dirt from the forklift and check the following items:

(1) Inspect all parts and components for damage or leakages.

(2) Check for deformation, distortion, damage or breakage.

(3) Add grease if necessary.

(4) Lift the fork to the maximum height for several times after operations are finished. (After you do not lift the fork to its maximum height in daily work, this allows the oil flow through the cylinder to prevent rusting.))

(5) Replace abnormal components that cause failures during work.

⚠ **• A small fault will cause a major accident. Do not operate or move the forklift before completion of repair and inspection.**

Ⅲ.Clean the forklift

⚠ **• Park the forklift at the specified location.**

• Pull the parking brake lever.

• Press the emergency stop switch.

• Turn off the key switch and remove the key.

• Disconnect the accumulator plug.

1. Clean the forklift surface

⚠ **Do not use flammable liquids to clean the forklift and take safety measures to prevent short circuits.**

·Use water and soluble detergent to clean the forklift.

• Carefully clean the oil filler and the periphery of the lubricating port.

☞ **Please conduct lubrication timely if you clean the forklift frequently.**

2. Clean the chain

⚠ **Do not use chemical detergents, acids and other corrosive liquids to clean the chain.**

• Place a container under the main frame.

• Use gasoline and other petrochemical derivatives to clean the chain.

• Do not use any additives when cleaning with a steam nozzle.

• Wipe the chain pin and water on chain surface immediately after cleaning.

3. Clean the electric system

⚠ **Do not use water to clean the pump control and the connectors, so as to avoid damage to the electrical system.**

Use non-metallic brush or low-power dryer to clean the electric system according to the manufacturer's instructions. Do not move the protective cover.

4. After cleaning

• Thoroughly wipe off water stains on the forklift (compressed air could be used.)

• Start the forklift according to the procedures.

⚠ **If moisture penetrates into the motor, you should first remove the moisture to prevent short circuits.**

⊘ **Moisture will reduce brake performance, so you shall conduct braking to dry the brake.**

Ⅳ. Regular maintenance

• Regular inspection and maintenance of the forklift shall be conducted to keep it in good performance status.

•Use spare parts made by Noblelift Machinery.

•Do not use different types of oil when replacing or refilling oil .

• The oil and accumulator being replaced shall be disposed according to local environmental protection laws and regulations rather than being dumped and abandoned.

• Develop comprehensive maintenance and repair program.

• Keep detailed record of each maintenance and repair.

• Forklift repairing without training is prohibited.

⚠ •No smoking.

· Turn off the key switch and disconnect the accumulator plug before maintenance. (Except for conducting some of the troubleshooting checks)

• Clean electrical parts with compressed air and do not use water for cleaning.

• Never stretch your hands, feet or any part of the body into the place between the main frame and instrument rack.

• The charged capacitor within the controller may cause electrical injury even if the key switch is off. Be careful when contacting the controller.

1. Regular maintenance schedule √ - Inspection, calibration, adjustment × - Replacement

(1) Accumulator

Maintenance Item	Maintenance content	Tools	Per day (8 hours)	per week (50 hours)	per month (200 hours)	Every 3 months (600 hours)	Every 6 months (1200 hours)
Accumulator	Electrolyte levels	measure by sight		√	√	√	√
	Specific gravity of electrolyte	Hydrometer		√	√	√	√
	Accumulator power		√	√	√	√	√
	Looseness of terminals		√	√	√	√	√
	Looseness of the connection lines		√	√	√	√	√
	Cleanness of accumulator surface		√	√	√	√	√
	If there is any tool placed on accumulator surface		√	√	√	√	√
	If the ventilation cover is tight and if the ventilation is uncovered			√	√	√	√
	Keep away		√	√	√	√	√

	from fireworks						

（2）Controller

Maintenance Item	Maintenance content	Tools	Per day (8 hours)	per week (50 hours)	per month (200 hours)	Every 3 months (600 hours)	Every 6 months (1200 hours)
Controller	Check wear status of contacts					√	√
	Check if the mechanical movement of the contactors is good					√	√
	Check if the operation of micro switch pedal is normal					√	√
	Check the connection between the motor, accumulator and the power units					√	√
	Check if the troubleshooting system of controller is normal						For the first 2 years

(3) Motor

Maintenance Item	Maintenance content	Tools	Per day (8 hours)	per week (50 hours)	per month (200 hours)	Every 3 months (600 hours)	Every 6 months (1200 hours)
Motor	Remove foreign body on the motor shell				√	√	√
	Replace or clean the bearing						√
	Check for wear of carbon brushes and commutator. Also check if the spring force is normal				√	√	√
	Check if the wiring is correct and reliable				√	√	√
	Clean up the groove on changeover plate and add carbon powder on the changeover					√	√

（4）Transmission system

Maintenance Item	Maintenance content	Tools	Per day (8 hours)	per week (50 hours)	per month (200 hours)	Every 3 months (600 hours)	Every 6 months (1200 hours)
Gearbox and wheel reduction mechanism	If any noise		√	√	√	√	√
	Check for leakage		√	√	√	√	√
	Replace the oil						×
	Check the working status of brake		√	√	√	√	√
	Check the gear operation					√	√
	Check looseness of the bolts at the connection with the main frame				√	√	√
	Check the tightening torque of wheel hub bolt	Torque Wrench	√	√	√	√	√

(5) Wheels (front and rear)

Maintenance Item	Maintenance content	Tools	Per day (8 hours)	per week (50 hours)	per month (200 hours)	Every 3 months (600 hours)	Every 6 months (1200 hours)
Tires	Wear, cracks or damage		√	√	√	√	√
	nails, stones or other foreign body on the tire				√	√	√
	Damage of wheel rim		√	√	√	√	√

（6）Steering system

Maintenance Item	Maintenance content	Tools	Per day (8 hours)	per week (50 hours)	per month (200 hours)	Every 3 months (600 hours)	Every 6 months (1200 hours)
Steering Wheel	Check the clearance		√	√	√	√	√
	Check the axial looseness		√	√	√	√	√
	Check the radial looseness		√	√	√	√	√
	Check the operating status		√	√	√	√	√
Steering gear and Vavle block	Check for looseness of the mounting bolts				√	√	√
	Check the leakage on contact surface of valve block and steering gear		√	√	√	√	√
	Check the sealing condition of the interface connectors		√	√	√	√	√
Rear axle	Check for looseness of the mounting bolts on rear axle				√	√	√
	Check bending, deformation, cracking and damage				√	√	√
	Check or replace the lubrication on axle supporting bearing					√	√
	Check or replace the lubrication on bearing of the steering wheel hub					√	√
	Check the operating conditions of steering cylinder		√	√	√	√	√
	Check for leakage of the steering cylinder		√	√	√	√	√
	Check the meshing of gear and rack					√	√
	Sensor wiring and working status					√	√

（7）Braking system

Maintenance Item	Maintenance content	Tools	Per day (8 hours)	per week (50 hours)	per month (200 hours)	Every 3 months (600 hours)	Every 6 months (1200 hours)
Brake pedal	Free travel	Graduated scale	√	√	√	√	√
	Pedal travel		√	√	√	√	√
	Operating conditions		√	√	√	√	√
	If there is air within the brake lines		√	√	√	√	√
Manipulation of parking brake	If the brake control is safe and reliable and with enough travel		√	√	√	√	√
	control performance		√	√	√	√	√
Rod, cable and etc	control performance				√	√	√
	Looseness of the connection				√	√	√
	Wear of the joints with gearbox					√	√
Pipelines	Damage, leakage, rupture				√	√	√
	Connection, clamping parts and looseness status				√	√	√
Braking Master cylinder and Wheel Cylinders	Leakage		√	√	√	√	√
	Check the oil level and replace oil		√	√	√		×
	Action of master cylinder and wheel cylinders					√	√
	Leakage and damage of master cylinder and wheel cylinders					√	√
	Check wear and damage of master cylinder, wheel cylinder piston cups and check valve. Replace if necessary.						×

（8）Hydraulic system

Maintenance Item	Maintenance content	Tools	Per day (8 hours)	per week (50 hours)	per month (200 hours)	Every 3 months (600 hours)	Every 6 months (1200 hours)
Hydraulic cylinder	Oil volume check and replacement of oil		√	√	√	√	×
	Clean the oil absorption filter						√
	Exclude foreign body						√
The control valve rod	Looseness of the connection		√	√	√	√	√
	Operating conditions		√	√	√	√	√
Multiple unit vavle	Oil leakage		√	√	√	√	√
	Operating conditions of the safety valve and self-locking tilt valve				√	√	√
	Measure the pressure of the safety valve	Oil pressure gauge					√
Pipe line joints	Leakage, looseness, crack, deformation and damage				√	√	√
	Replace the tube						× 1 to 2 years
Hydraulic Pump Cylinders	Oil leaks or noise of hydraulic pump		√	√	√	√	√
	Wear of the driving gear of hydraulic pump				√	√	√

（9）Lifting system

Maintenance Item	Maintenance content	Tools	Per day (8 hours)	per week (50 hours)	per month (200 hours)	Every 3 months (600 hours)	Every 6 months (1200 hours)
Chain sprocket	Check the tightness of the chain and see if there is any deformation, damage and corrosion		√	√	√	√	√
	Lubricate the chain				√	√	√
	Riveting pin and its looseness				√	√	√
	Deformation and damage of chain wheel				√	√	√
	If the sprocket of bearings are loose				√	√	√
Accessories	Check if it is in normal state				√	√	√
Lifting cylinder and tilt cylinder	Looseness, deformation, damage of piston rod, threaded rod and their connection parts		√	√	√	√	√
	Operating conditions		√	√	√	√	√
	Leakage		√	√	√	√	√
	Wear and damage of pins and steel backed bearing				√	√	√
Fork	Damage, deformation and wear of the fork				√	√	√
	Damage, wear of the location pin					√	√
	Cracking and wear on the				√	√	√

	welding parts at the root of the fork						
Main Frame Fork frame	Crack or damage on the inner main frame, outer main frame and welded parts on the beam				√	√	√
	Bad welding, cracking, damage on the welded parts between tilt cylinder bracket and the main frame				√	√	√
	Bad welding, cracking or damage of the inner and outer main frame				√	√	√
	Bad welding, cracking or damage of the fork frame				√	√	√
	Looseness of rollers				√	√	√
	Wear and damage of the support bearing of the main frame						√
	Looseness of bolts on the main frame bearing cap	Test hammer			√ (Only for the first time)		√
	Looseness of bolts on the piston rod head of the lifting cylinder and the plate bending bolts	Test hammer			√ (Only for the first time)		√
	Cracking and damage of roller, roller axle and welding parts				√	√	√

(10) Others

Maintenance Item	Maintenance content	Tools	Per day (8 hours)	per week (50 hours)	per month (200 hours)	Every 3 months (600 hours)	Every 6 months (1200 hours)
Overhead guard and backrest	are firmly installed	Test hammer	√	√	√	√	√
	Check the deformation, cracking and damage		√	√	√	√	√
Steering lamp	Working and installation status		√	√	√	√	√
Horn	Working and installation status		√	√	√	√	√
Lamps and light bulbs	Working and installation status		√	√	√	√	√
Back-up buzzer	Working and installation status		√	√	√	√	√
Instrument	Working status of instrument		√	√	√	√	√
Wiring	Damage and loosening of harness			√	√	√	√
	Loosening of circuit connection				√	√	√

2. Replace critical safety components periodically

If injury or damage of some parts is difficult to find through regular maintenance, users shall conduct periodic replacement of parts given in the following table to further improve security.

If these parts are abnormal before the due replacement time, replace them immediately.

Name of key safety components	Service life (years)
Brake hose or tube	I～2
Hydraulic hose for the lifting system	I～2
Lifting chain	2～4
High pressure hose and tube for the hydraulic system	2
Oil cup of the brake fluid	2～4
Brake master cylinder cover and dust proof cover	1
Internal seals and rubber parts of the hydraulic system	2

Ⅴ. Lubricating parts and recommended oil

1. Lubricating parts

○: Replacement FO: Hydraulic oil
◎: adding GO: Gear oil
□: Check and adjustment CG: Lubricant grease
BO: Brake oil W: Distilled water

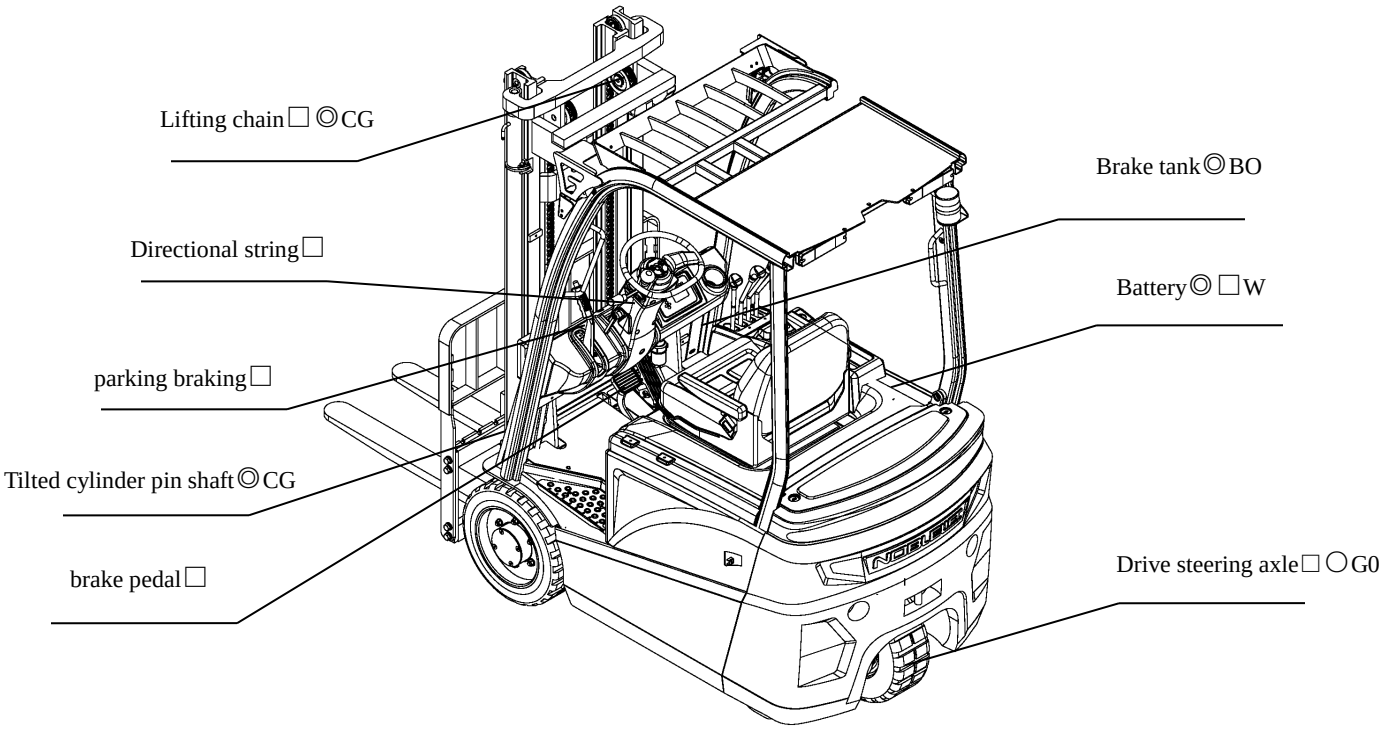

2. Recommended oil

Name	Trademark	Capability(L)	Remark
Hydraulic oil	L-HM32	Max28	⩾-5℃
	L-HV32		⩾-20℃
Gear oil	85W/90GL-5	3.5	-15℃ ~ +49℃
	80W/90GL-5		-25℃ ~ +49℃
Brake fluid	Caltex DOT3	0.2	
Industrial Vaseline	2#		Battery electrode column
Grease	3# Lithium Grease		

Maintenance record

No.	Date	Maintenance content	Note

https://truckmanualshub.com/

NOBLELIFT INTELLIGENT EQUIPMENT CO.,LTD.
Service hotline：4008-836115
Wechat：nuolijixie
Postcode：313100 email address: info@noblelift.com
Website：www.noblelift.com
Version：Jan,2018