https://truckmanualshub.com/

FOREWORD

We would like to take this opportunity to thank you for choosing an Isuzu product and assure you of our continuing interest in your motoring pleasure and satisfaction.

This manual has been prepared to acquaint you with the operation and maintenance of your Isuzu vehicle, and to provide important safety information. We urge you to read it carefully and follow the recommendations to help assure the most enjoyable and trouble-free operation of your vehicle.

When it comes to service, remember that your Isuzu dealer knows your vehicle best and is interested in your complete satisfaction.

This manual should be considered a permanent part of the vehicle, and must remain with the vehicle at time of resale.

Cautionary statements

1. ***Statements concerning the possibility of personal injury are titled "WARNING" and appear within a shaded block.***
2. ***Statements concerning the possibility of mechanical damage to the vehicle are titled "CAUTION".***
3. ***Other information which needs to be emphasized but which does not concern the possibility of personal injury or mechanical damage is titled "NOTE".***
4. ***⃠This symbol means "Do not", "Do not do this" or "Do not let this happen".***

All information, illustrations and specifications contained in this manual are based on the latest product information available at the time of publication. The right is reserved to make changes at any time without notice.

Due to differences in vehicle specifications, the illustration used for description may not match your vehicle.

Isuzu Motors Limited
Tokyo, Japan

https://truckmanualshub.com/

ABBREVIATIONS USED IN THIS MANUAL

V ..... Variation (optional on some models).

OPT ..... Optional equipment.

RHD ..... Right-hand drive.

LHD ..... Left-hand drive.

4JB ..... 4JB1, 4JB1-TC engine models only.

4JB1 ..... 4JB1 engine model only.

4JB1-TC ..... 4JB1-TC engine model only.

4JH ..... 4JH1-TC engine models only.

TRB ..... Turbo charged engine model only.

All rights reserved. This material may not be reproduced or copied, in whole or in part, without permission in writing from Isuzu Motors Limited.

https://truckmanualshub.com/

TABLE OF CONTENTS

Q-SERIES

1. IMPORTANT INFORMATION
2. CONTROLS AND INSTRUMENTS
3. BEFORE DRIVING YOUR VEHICLE
4. DRIVING
5. SERVICE AND MAINTENANCE
6. MAIN DATA AND SPECIFICATIONS

https://truckmanualshub.com/

https://truckmanualshub.com/

IMPORTANT INFORMATION

- **Location of chassis and engine number 1–1**
- **Correct cargo loading 1–2**
- **Operation of new vehicle 1–6**
- **Operation and care of vehicle 1–7**
- **Maintenance 1–7**
- **Before driving 1–8**
- **When the vehicle runs 1–12**
- **When stopping / parking the vehicle 1–17**
- **To avoid damage to the vehicle 1–19**

The following information is important for proper care and economical operation of your Isuzu vehicle and should be thoroughly understood before operating it into service.

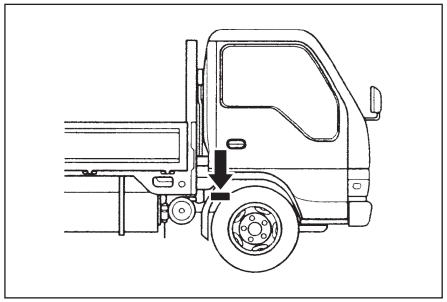

LOCATION OF CHASSIS AND ENGINE NUMBER

It is advisable to record the chassis and engine number as they are required when contacting your Isuzu dealer for repair services.

Chassis number:

The chassis number is stamped on the front right-hand side face of the chassis side member.

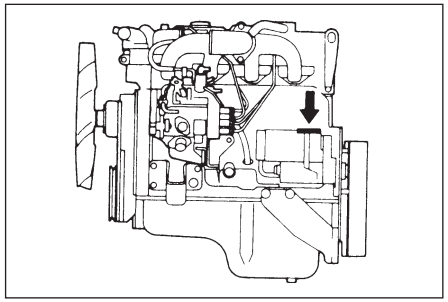

Engine number:

The engine number is stamped on the left side of the cylinder body.

QKR-IE-1442_4805234_ALL.indb 1–1 2017/09/27 13:34:36

https://truckmanualshub.com/

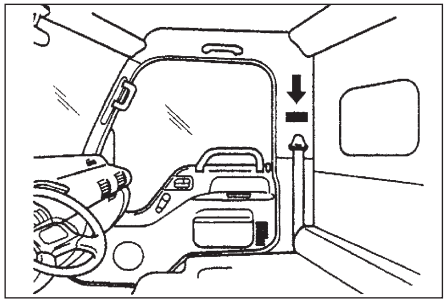

Vehicle identification plate:

The vehicle identification plate is attached to the interior side of the cab side panel on the right side.

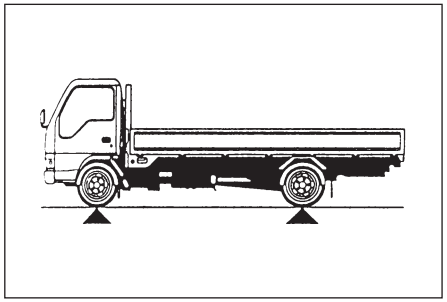

CORRECT CARGO LOADING

Overloading and uneven loading are very dangerous. Please use the correct loading based on the standard maximum load. Wrong loading may cause unstable operation, overload on one of the axles, and an excessive load on the wheel bolts. This is a major factor of the accident that a wheel comes off due to wheel bolt breakage. Also, the cargo bed and frame will be damaged.

WARNING

Overloading not only shortens the service life of your vehicle, but also creates serious potential safety hazards.

The weight of the payload must be limited within the GVM rating and distributed over the front and rear axles so as not to exceed the axle capacities.

Wrong loading may cause unstable operation, overload on one of the axles, and an excessive load on the wheel bolts. This is a major factor of the accident that a wheel comes off due to wheel bolt breakage. Also, the cargo bed and frame will be damaged.

Refer to "MAIN DATA AND SPECIFICATIONS" for GVM and Axle capacities.

QKR-IE-1442_4805234_ALL.indb 1–2 2017/09/27 13:34:36

https://truckmanualshub.com/

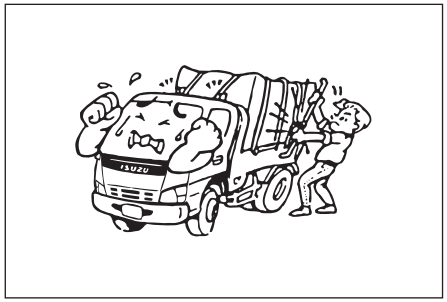

Never apply unnecessarily large force.

Fix the load securely using a load cover or rope to prevent it from falling, but do not apply unnecessarily large force as this could break or otherwise damage the side drop, tail gate and guard frame, etc.

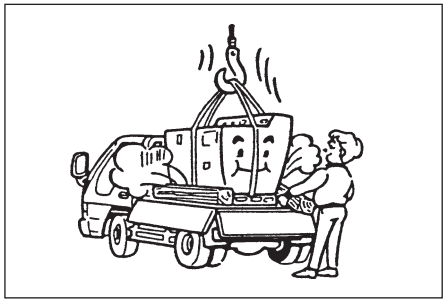

When loading with a heavy cargo:

In case of heavyweight cargo, use pads under the cargo to prevent it from moving and fix it firmly with wire rope, etc. Do not fix cargo using excessive force.

Keep flammable materials away from the gap between the cab and the guard frame.

Make certain the load cover or rope ends are tucked in tight and not hanging free in the gap behind the cab, as the engine heat may cause a fire while driving.

QKR-IE-1442_4805234_ALL.indb 1–3 2017/09/27 13:34:37

https://truckmanualshub.com/

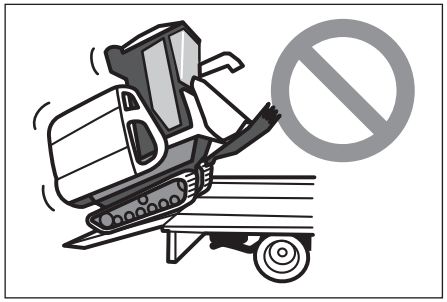

Loading farming equipment

CAUTION

The frame may become deformed when farming equipment is loaded from the rear of the cargo bed. In addition, the frame may become deformed even when loading farming equipment that has a weight under the maximum loading capacity.

NOTE

When loading farming equipment, a device for securing the cargo bed is required. Use a car carrier or attach a rear support stand. If you have any questions, contact an Isuzu dealer.

Loading methods

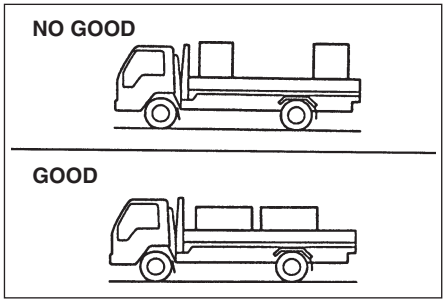

Do not leave a large space between loads.
Distribute the load evenly.

QKR-IE-1442_4805234_ALL.indb 1–4 2017/09/27 13:34:37

https://truckmanualshub.com/

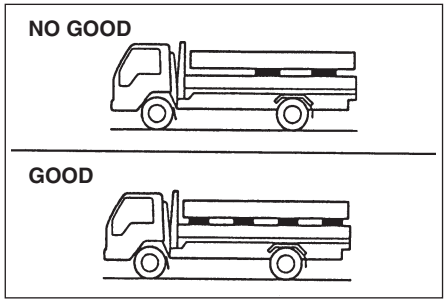

When using supports under a load, distribute them evenly.

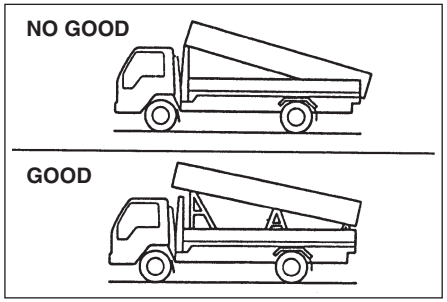

Place supports underneath when carrying an extra-long item. Do not support it with the guard frame or the rear end of the bed.

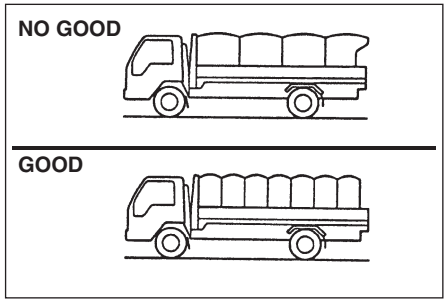

Secure the load with a load cover and rope to prevent it from falling. Tuck the fixing material with rubber bands or other appropriate material.

QKR-IE-1442_4805234_ALL.indb 1–5 2017/09/27 13:34:37

https://truckmanualshub.com/

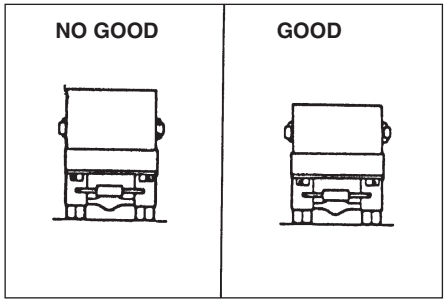

Avoid high loading.
Minimize the height to prevent the vehicle from rolling due to crosswind or when turning.

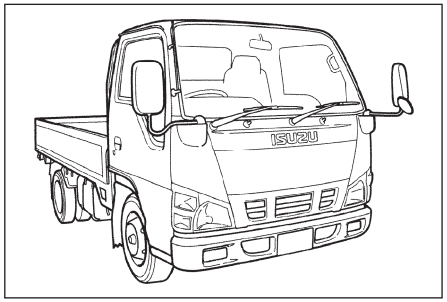

OPERATION OF NEW VEHICLE

The subsequent performance and the service life of your vehicle are under the direct influence of the care and treatment that your vehicle will receive during the initial break-in period. It is therefore always recommended that during the initial 1,000 km (600 miles) break-in period, the following few simple precautions are carefully observed.

1. It is recommended that your speed during initial 1,000 km (600 miles) be confined to the following:

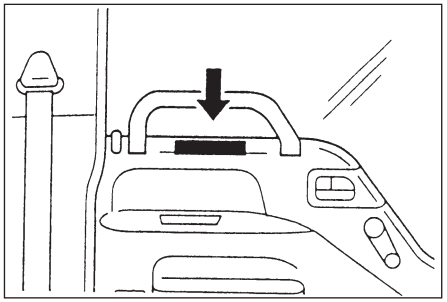

Without tachometer:

The shift speed label is attached to the inside of the driver's door.
Shift each gear at 10 km/h (6 mph) lower than the recommended shift speed.

With tachometer:

The shift speed label is not attached.
It is recommended that engine speed is restricted to the following:

4JB1, 4JB1-TC : 2,800rpm
4JH1-TC : 4,000rpm

QKR-IE-1442_4805234_ALL.indb 1–6 2017/09/27 13:34:37

https://truckmanualshub.com/

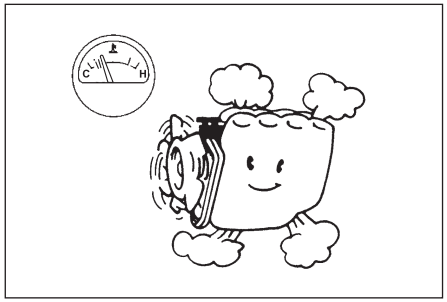

2. Avoid engine racing, abrupt starting and needless hard stops by popping the clutch.
3. Always let the engine idle until it becomes thoroughly warmed up.

OPERATION AND CARE OF VEHICLE

Every component and system of your vehicle should be checked with the aid of "CONTROLS AND INSTRUMENTS" and "DRIVING" sections in this manual.

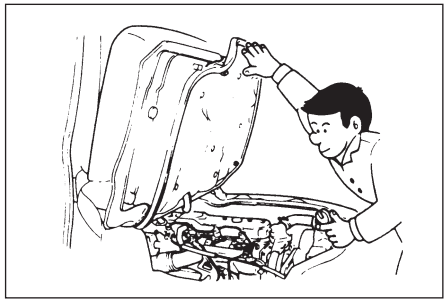

MAINTENANCE

In order to maintain safe and dependable vehicle operation, inspection and adjustments should be performed as outlined in the "SERVICE AND MAINTENANCE" section. Your Isuzu dealer is trained to perform regular maintenance operation on your vehicle.

WARNING

When performing work on the electrical system, begin by turning the starter switch to the "LOCK" position, wait at least 1 minute, and then disconnect the negative cable

WARNING (Continued)

QKR-IE-1442_4805234_ALL.indb 1–7 2017/09/27 13:34:37

https://truckmanualshub.com/

WARNING (Continued)

from the negative terminal on battery. If the negative cable is disconnected within 1 minute, the engine control module may malfunction.

BEFORE DRIVING

Do you use the specified fuel? (low sulfur diesel fuel only)

CAUTION

Always use diesel fuel.

Use of low quality fuel may adversely affect to the engine parts, and cause failure.

Use of other than specified fuel may adversely affect to the engine or emission control system and cause failure. For models conforming to Euro IV emission standards, be sure to use low-sulfur diesel fuel (containing sulfur of 50 ppm or lower) or extra-low-sulfur diesel fuel (containing sulfur of 10 ppm or lower).

NOTE

The specification of fuel varies depending on seasons and regions.

Do not bring fuel containers, spray cans, etc. into the vehicle

WARNING

It is dangerous that a fire or explosion may occur when the containers catch fire or get damaged.

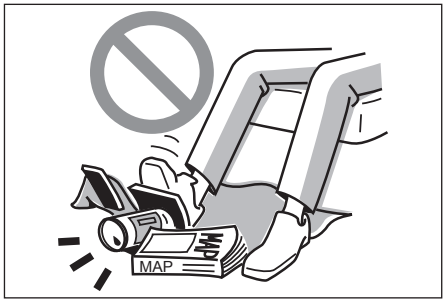

Clear the driver's footwell

WARNING

It is dangerous that you cannot operate the brake pedal when an object in the driver's footwell moves behind the pedal. To ensure operation of each pedal, place the floor mat properly.

QKR-IE-1442_4805234_ALL.indb 1–8 2017/09/27 13:34:37

https://truckmanualshub.com/

Do not keep the engine running indoors

WARNING

In a place with poor ventilation, carbon monoxide poisoning may occur. Starting or warming-up the engine should be performed in a well-ventilated place.

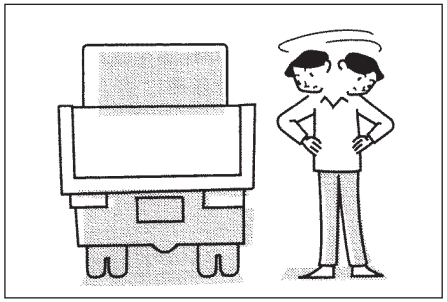

Check around the rear of the vehicle before starting the engine

WARNING

Check for flammable materials around the rear of the vehicle before starting the engine. These materials may cause a fire. Especially, keep the vehicle more than 30 cm (12 inch) away from any wood. Otherwise, it is very dangerous that this may cause deformation, discoloration or a fire.

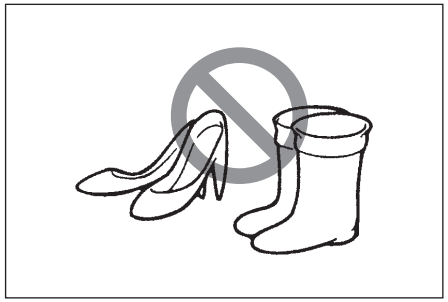

Choose your footwear suitable for driving

CAUTION

Choose footwear that ensures proper operation of pedals when driving the vehicle. Use of footwear unsuitable for driving may cause an accident.

QKR-IE-1442_4805234_ALL.indb 1–9 2017/09/27 13:34:37

https://truckmanualshub.com/

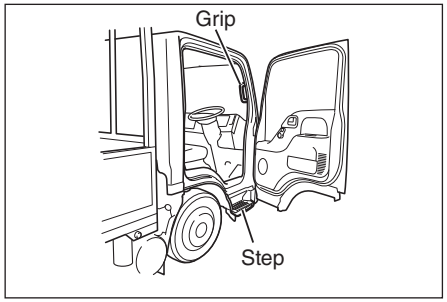

Getting in and out of the vehicle

Carefully check that the area around the vehicle is safe, hold the grip, and place your foot on the step when getting in or out of the vehicle.

WARNING

- ***When getting in or out of the vehicle, make sure you use the grip and step to always support yourself from at least 3 points. It is very dangerous to stand on the tire or wheel when getting in or out of the vehicle. Furthermore, do not try to jump in or out of the vehicle, as doing so could cause unexpected accidents or injuries.***
- ***Getting in or out of the vehicle with oily or greasy hands or shoes could cause you to slip. Always thoroughly clean grease etc. from your hands and shoes before getting in or out of the vehicle.***
- ***Rain and snow can cause the step to become very slippery. Therefore, always remove snow and ice from your shoes and the step, and be careful not to slip when getting in and out of the vehicle.***
- ***Exercise caution when opening or closing doors, as strong winds or steep slopes may cause doors to open or close suddenly.***

CAUTION

Do not hold parts other than the grip when getting in or out of the vehicle. Doing so may cause damage to the vehicle or injuries to yourself or others.

Starting engine on the vehicle

CAUTION

- ***Before starting the engine on the vehicle, be seated in the driver's seat and make sure the parking brake is pulled securely. Also make sure the change lever is in "N" position while depressing the clutch pedal, and then start the engine.***
- ***If you start the engine through the window (not seated in the driver's seat), it is dangerous that the vehicle may start to move when the change lever is in other than "N" position. Never do that.***

QKR-IE-1442_4805234_ALL.indb 1–10 2017/09/27 13:34:37

https://truckmanualshub.com/

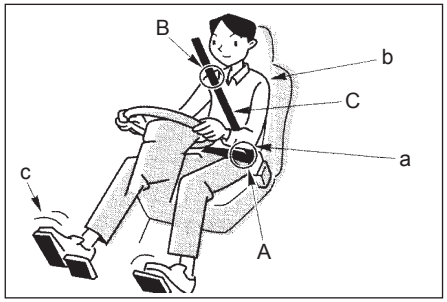

	Advice on seat adjustment
a	Adjust the seat so that you can move the steering wheel easily with your arms bent slightly.
b	Keep your shoulders on the seat-back.
c	You can depress each pedal fully.

Adjusting the seat to your proper driving posture and wearing the seat belt are fundamental to safety drive

CAUTION

Before driving, be sure to adjust the positions of the seats and mirrors, and take a proper driving posture. Then shake the seat lightly to make sure it is securely fixed. Wear the seat belt properly, not only drivers but also passengers.

	Precautions for wearing seat belts	Why?
A	Be sure to wear the lap belt as low on the hips as possible.	Because it is dangerous in case that each part of body may be pressured by the belt.
B	Wear the shoulder belt so that it does rest snugly across the shoulder, but does not contact the neck, chin or face.	
C	Make sure that the seat belt does not have twist.	Because this will maximize its effectiveness.

QKR-IE-1442_4805234_ALL.indb 1–11 2017/09/27 13:34:37

https://truckmanualshub.com/

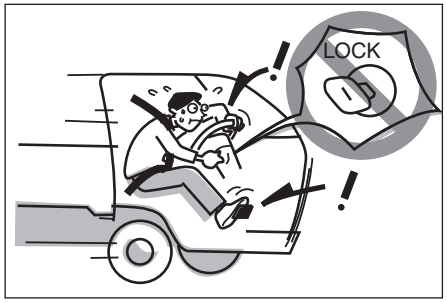

WHEN THE VEHICLE RUNS

Do not turn off the engine while the vehicle is running

CAUTION

- ***The engine may get damaged.***
- ***The effectiveness of the brake will worsen.***
- ***Turning the steering wheel will be heavy since the power steering system is disabled.***
- ***It is dangerous that each warning light or indicator light does not work.***
- ***If the starter switch is turned to the "LOCK" position, the key may be removed. This locks the steering wheel, therefore it is dangerous that you cannot turn the steering wheel.***

Pulling away in a manual transmission model

CAUTION

Pull away gently in first gear. Pulling away in a high gear, pulling away rapidly or slipping the clutch for a long time while pulling away would damage the clutch.

QKR-IE-1442_4805234_ALL.indb 1–12 2017/09/27 13:34:37

https://truckmanualshub.com/

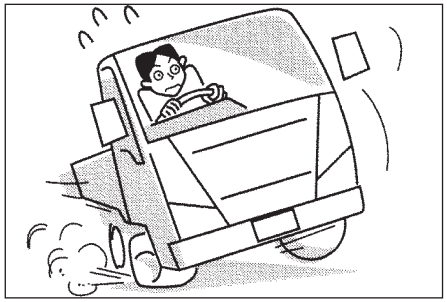

Action to be taken when tires get flat or burst

Do not panic. Hold the steering wheel firmly and apply brake gradually (It is dangerous to apply the brake suddenly. This may cause loss of vehicle's control.) to slow down the vehicle. Park it in a safe place, and replace the tire.

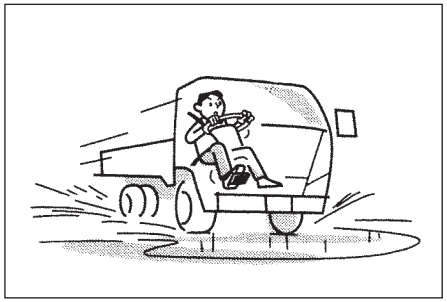

Braking performance after passing puddles and washing the vehicle

After passing or parking at puddles or washing the vehicle, depress the brake pedal lightly to check the braking performance. If the braking performance weakens, dry the brake system by depressing the brake pedal lightly several times until the performance recovers, while driving the vehicle at the slow speed, paying attention to other vehicles ahead of and behind you.

CAUTION

When inevitably driving on flooded road, it is advisable to run slowly at a constant speed while confirming the depth of water. Otherwise, water may intrude in the engine cylinder and cause damage on the engine (due to water hammer phenomenon). It is also advisable to slow down your vehicle and drive with care. After driving on flooded roads, it is recommended to immediately take the vehicle to the nearest Isuzu dealer to have the engine, electric parts, transmission, differential, and clutch parts checked for water intrusion. Also, have oil added or lubrication performed in areas where necessary.
If water-ingress to the clutch bearing has occurred, or if such water-ingress is suspected, replace the clutch release bearing.

QKR-IE-1442_4805234_ALL.indb 1–13 2017/09/27 13:34:37

https://truckmanualshub.com/

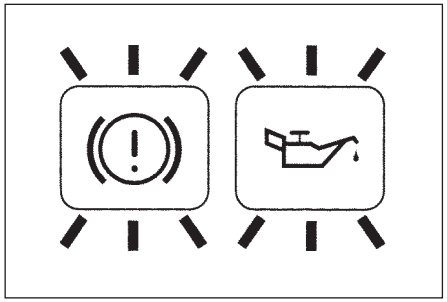

Park the vehicle in a safe place firstly if the warning light comes on

Do not continue to drive disregarding the lighting (blinking) of the warning light. Be sure to take action for lighting or blinking lights, referring to the instruction of how to see the meters, the warning lights, and the indicator lights.
Refer to the "CONTROLS AND INSTRUMENTS" section.

Proper shifting

Downshifting has two main purposes.

- To provide the engine brake while going down a steep or long slope.
- To improve quick response and fuel economy while going up a slope.

Precautions for downshifting

- Overrunning leads to damage to the engine. Downshifting must be performed within the appropriate speed range of each gear.
- Even when the vehicle runs on other than a downhill slope, downshifting must be performed within the appropriate speed range of each gear.
- On the new vehicle (less than about 1000 km (600 miles) of mileage), downshifting should be performed at around 10 km/h below the appropriate speed range.

When going up a slope

- Downshift early to avoid load on the engine.

When going down a slope

- When going down a slope, normally use the same gear that was used for going up that slope. However, drive the vehicle at the appropriate speed so that the tachometer does not indicate the red zone to prevent the engine from overrunning (exceeding the engine speed limit).

QKR-IE-1442_4805234_ALL.indb 1–14 2017/09/27 13:34:37

https://truckmanualshub.com/

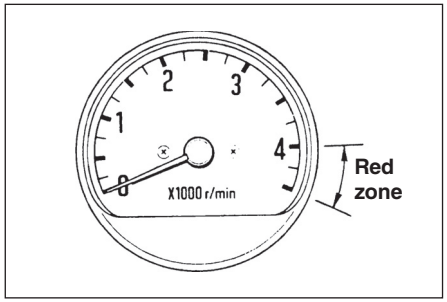

Drive the vehicle at the appropriate speed so that the tachometer does not indicate the red zone.

NOTE

Engine brake is a braking force which is applied when the accelerator pedal is released while the vehicle is running. The lower gears apply the stronger engine brake force.

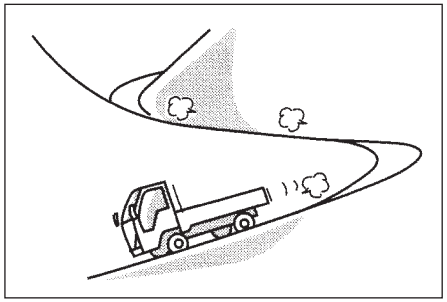

When going down a long slope

- When going down a long slope, use exhaust brake (if equipped) and engine brake at the same time. Depressing the foot brake for a long time may lead to brake fade or vapor lock, causing poor brake force.
- Use of exhaust brake (if equipped) and engine brake provided by the low gears are more effective than use of foot brake because they reduce the load on the foot brake and apply more braking force. However, be careful not to overrun the engine.

NOTE

Vapor lock

Frequent use of the foot brake makes the brake system overheat, and the brake fluid boils due to this heat, then air bubbles form in the brake hose. In this case, the hydraulic pressure is not transmitted to the wheel cylinders though the brake is depressed because only air bubbles are compressed, resulting in a sudden drop in the braking force.

Brake fade

Frequent use of the foot brake makes the brake system overheat, and the friction on the friction surface of brake system reduces due to this heat, resulting in a drop in the braking force.

QKR-IE-1442_4805234_ALL.indb 1–15 2017/09/27 13:34:38

https://truckmanualshub.com/

Driving on a wet or icy road surface such as due to rain, freeze and snow

- Avoid sudden steering and sudden braking, and slow down the vehicle by using exhaust brake (if equipped) and engine brake in combination. (However, sudden use of exhaust brake (if equipped) or engine brake may cause the vehicle to skid.) Drive moderately especially in areas where puddles are likely to form, as hydroplaning may occur.
- If you must drive through a water-covered road, be sure to check the depth and drive at a constant slow speed. Otherwise, water may get inside the engine cylinder and the engine may get damaged (water hammer). Drive carefully at a moderate speed.

NOTE

Hydroplaning

When a vehicle runs on a wet road at a high speed, a film of water forms between the tires and the road surface. The tires will float on water and lose their grips, resulting in loss of steering and braking.

Be careful with crosswinds

When crosswinds blow and the vehicle sways, hold the steering wheel firmly, and slow down to a moderate speed to get the vehicle back to stable condition. Be careful that strong crosswinds may blow in the following situations.

- When passing through an exit of tunnel, bridge, embankment or dugway.
- When a large truck passes by your vehicle.
- When your vehicle passes by a large truck.

When high impact on the underbody occurs

Immediately park the vehicle in a safe place so that it does not obstruct traffic, and check for brake fluid, fuel leakage or damage to each part. If any damage or fault is found, have your vehicle inspected or repaired at Isuzu dealer as soon as possible.

QKR-IE-1442_4805234_ALL.indb 1–16 2017/09/27 13:34:38

https://truckmanualshub.com/

WHEN STOPPING / PARKING THE VEHICLE

When you take a nap in the vehicle

WARNING

- ***When you take a nap in the vehicle, always turn the starter switch to "LOCK" position to turn off the engine. Otherwise, if you unintentionally move the change lever or depress the accelerator pedal, the vehicle may start moving, causing an accident.***
- ***Be careful that the engine may overheat, or a fire may occur due to overheating of engine or exhaust pipe if you unintentionally keep depressing the accelerator pedal.***
- ***Be careful that carbon monoxide poisoning may occur depending on circumstances such as a place with poor ventilation if the exhaust gas gets inside the vehicle.***

Run the engine whenever you move the vehicle

CAUTION

Turning the steering wheel will be heavy since the power steering system is disabled when the engine is not running. The brake system is also disabled, resulting in poor braking force. Also, if you attempt to move the vehicle with the help of downhill slope, it may not move correctly, causing an accident.

QKR-IE-1442_4805234_ALL.indb 1–17 2017/09/27 13:34:38

https://truckmanualshub.com/

Be careful with flammable materials

CAUTION

- ***Make sure that there are no flammable materials around the rear of vehicle and dried grass does not wind around the exhaust pipe, and then start the engine. Be careful that the hot exhaust pipe and hot exhaust gas may catch fire after engine racing, or engine running at high speed for long periods of time.***
- ***Take extra care of the heat of exhaust gas during idling.***

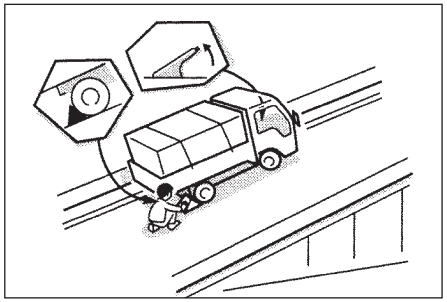

Ensure braking on a slope

When parking the vehicle on a slope, apply the parking brake firmly and make sure the vehicle does not move, and put wheel chocks for safety. Change the directions of wheels by turning the steering wheel fully to the left or right so that the vehicle stops at blocks (such as curbs) when it goes down a slope in case that the wheel chocks go off or the parking brake is released.

When leaving the vehicle

Always apply the parking brake firmly, stop the engine, remove the key from the starter switch, and lock the doors to prevent theft or mischief. Do not leave any valuables on the place visible from outside of the vehicle.

CAUTION

Do not leave glasses or a lighter in the vehicle. The lighter may explode, or the plastic lens or flame of glasses may deform or crack if they are left in the vehicle.

QKR-IE-1442_4805234_ALL.indb 1–18 2017/09/27 13:34:38

https://truckmanualshub.com/

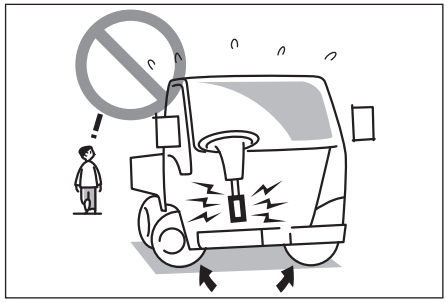

TO AVOID DAMAGE TO THE VEHICLE

Do not mount any accessories on the windshield, windows, etc.

WARNING

This may disturb safety driving. Also, a sucker of accessory may act as lens, causing a fire.

Do not drive with your foot resting on the clutch pedal

This causes a half-clutch condition unintentionally. The half-clutch condition facilitates clutch disc wear resulting in clutch slip. Do not keep the vehicle stopped on an uphill slope using a half-clutch, instead of brake.

Never keep the steering wheel turned fully for a long period

WARNING

This causes the temperature of oil in the power steering oil pump to increase, resulting in poor lubrication. This leads damage to the oil tank or deterioration of the seal resulting in damage to the power steering oil pump, power steering unit and power steering hose, etc. As a result, turning the steering wheel may get heavy suddenly or an accident such as a fire may occur.

QKR-IE-1442_4805234_ALL.indb 1–19 2017/09/27 13:34:38

https://truckmanualshub.com/

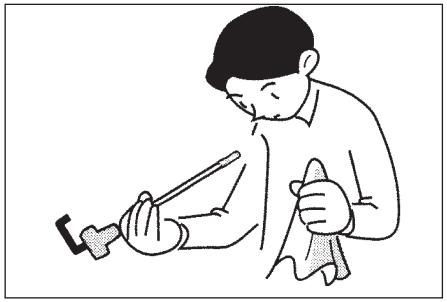

Keep engine oil clean

The engine oil has the following important functions.

- Prevents wear of the engine parts.
- Cools down the engine parts.
- Cleans the engine parts.
- Keeps the combustion chamber airtight and prevents rust. Change the engine oil, etc. periodically.

Refer to "SERVICE AND MAINTENANCE" and "MAIN DATA AND SPECIFICATIONS".

Do not stand on the engine

Engine compartment is the heart of the vehicle. Do not put your foot or stand on the engine. This may cause failure such as damage to the head cover or connectors.

QKR-IE-1442_4805234_ALL.indb 1–20 2017/09/27 13:34:38

https://truckmanualshub.com/

CONTROLS AND INSTRUMENTS LHD

- **Meters and indicator lights..... 2–3**
- **Steering column controls..... 2–14**
- **Instrument cluster..... 2–19**
- **Floor controls..... 2–22**
- **Others..... 2–24**

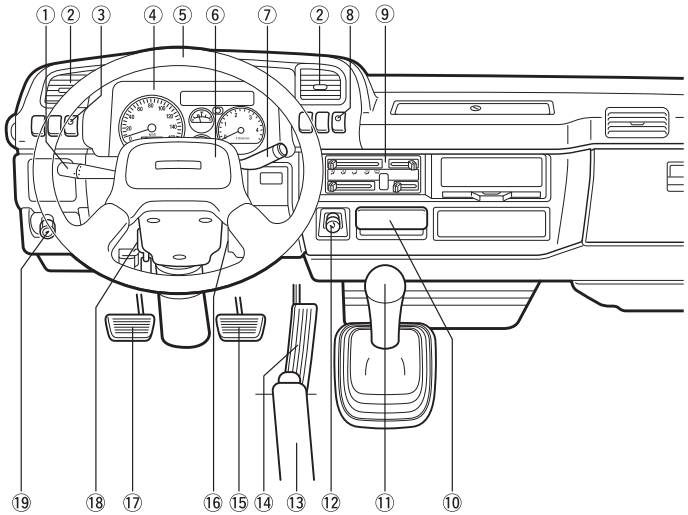

1 Combination switch lever
2 Meter panel ventilators
3 OPT Front fog light switch
4 Meter and Indicator light panel
5 Steering wheel
6 Horn button
7 Windshield wiper and washer switch lever
OPT Exhaust brake switch lever
8 Hazard warning flasher switch
9 OPT Heater and defroster control panel
10 Ash tray
11 Transmission gearshift lever
12 Cigarette lighter
13 Parking brake lever
14 Accelerator pedal
15 Brake pedal
16 Starter switch
17 Clutch pedal
18 OPT Steering adjusting lock lever (Vertical, back and forth)
19 Idling control knob

QKR-IE-1442_4805234_ALL.indb 2–1 2017/09/27 13:34:38

https://truckmanualshub.com/

CONTROLS AND INSTRUMENTS RHD

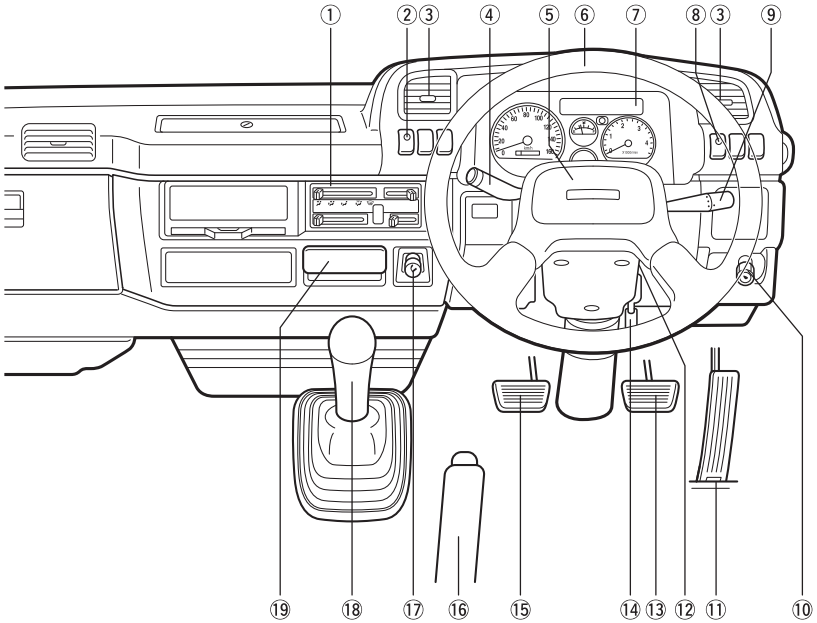

1 OPT Heater and defroster control panel
2 Hazard warning flasher switch
3 Meter panel ventilators
4 Windshield wiper and washer switch lever
  OPT Exhaust brake switch lever
5 Horn button
6 Steering wheel
7 Meter and Indicator light panel
8 OPT Front fog light switch
9 Combination switch lever
10 Idling control knob
11 Accelerator pedal
12 Starter switch
13 Brake pedal
14 OPT Steering adjusting lock lever (Vertical, back and forth)
15 Clutch pedal
16 Parking brake lever
17 Cigarette lighter
18 Transmission gearshift lever
19 Ash tray

QKR-IE-1442_4805234_ALL.indb 2-2 2017/09/27 13:34:38

https://truckmanualshub.com/

METERS AND INDICATOR LIGHTS

Meter panel

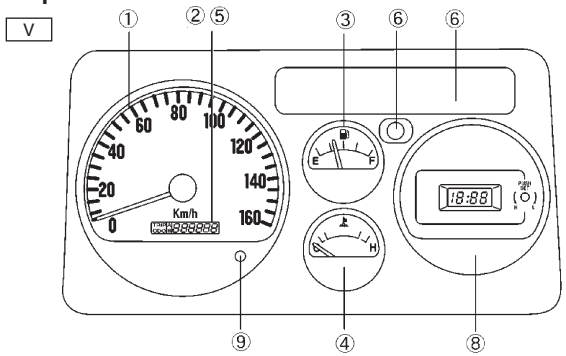

1 Speedometer
2 Odometer
3 Fuel gauge
4 Temperature gauge
5 Trip meter
6 Indicator lights and warning light panel
7 Engine tachometer
8 Digital clock
9 Push button

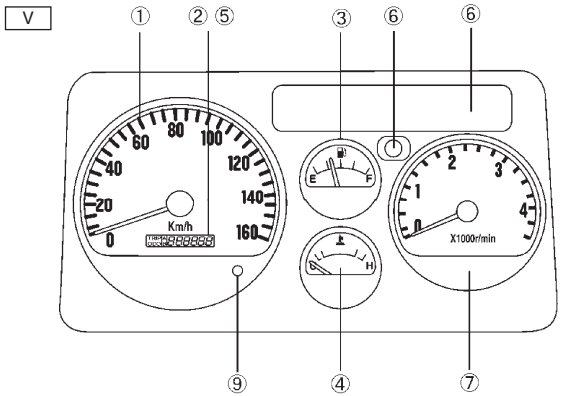

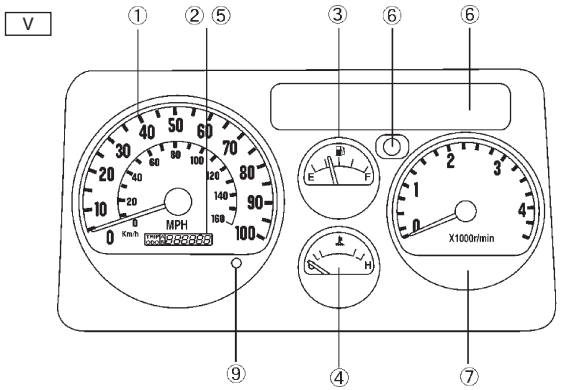

QKR-IE-1442_4805234_ALL.indb 2–3 2017/09/27 13:34:38

https://truckmanualshub.com/

V

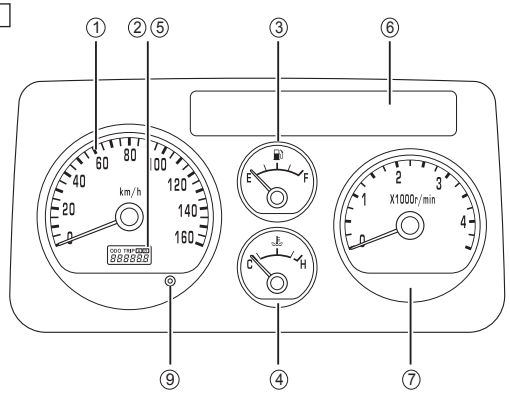

V

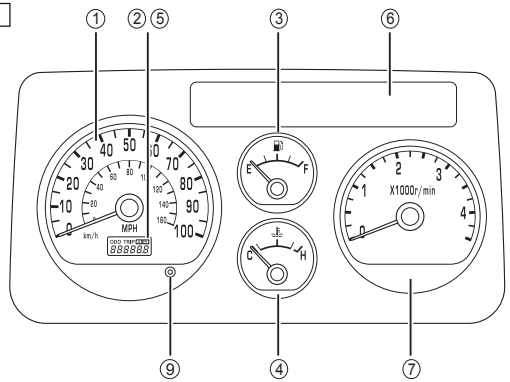

QKR-IE-1442_4805234_ALL.indb 2–4 2017/09/27 13:34:38

https://truckmanualshub.com/

Indicator and warning lights

..... Turn signal indicator light

..... High beam indicator light

..... V Rear fog indicator light

..... Fuel indicator light

..... Battery/Generator indicator light

..... Parking brake indicator and brake fluid level indicator light

..... Glow plug indicator light

..... Oil pressure indicator light

..... OPT Exhaust brake indicator light

..... V Water separator indicator light

..... 4JH Check engine indicator light

..... V SVS (Service vehicle soon) indicator light

..... V Seat belt warning light (for GCC model)

QKR-IE-1442_4805234_ALL.indb 2–5 2017/09/27 13:34:38

https://truckmanualshub.com/

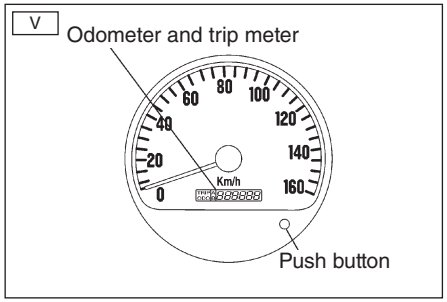

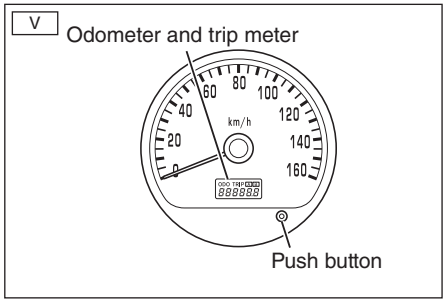

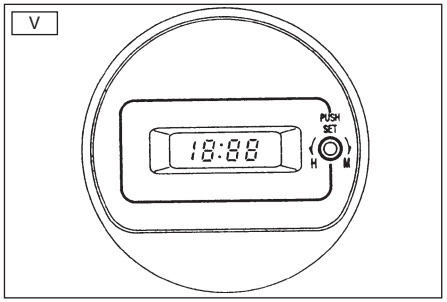

Speedometer

The speedometer indicates the vehicle speed in kilometers per hour (km/h) or miles per hour (mph).

Odometer and trip meter

The odometer and the trip meter indicate kilometers (or miles).
The odometer indicates total running mileage, and the trip meter is used when you want to know point-to-point distance and running mileage reached in a certain period of time. Further, the trip meter can indicate two kinds of point-to-point distance.

Change indicator and push button

Push the button for approximately one second or less, and the indication will be changed in order of odometer, trip meter A, trip meter B, and odometer. Continue to push the knob for approximately one second or more when the meter (trip A, trip B) is indicated, and the indication will return to 0 (zero).

Digital clock

When the key switch is turned to the "ACC" or "ON" position, the time will appear digitally on the clock face.
To set the time, operate the knob for the following functions:
To set hours:
Depress and turn the knob counter-clockwise to advance the hour.

To set minutes:
Depress and turn the knob clockwise to advance the minutes. The hour indication will remain unchanged when the minute changes from "59" to "00".

To reset minutes:
Pull the knob out to reset the minutes to "00".

QKR-IE-1442_4805234_ALL.indb 2–6 2017/09/27 13:34:39

https://truckmanualshub.com/

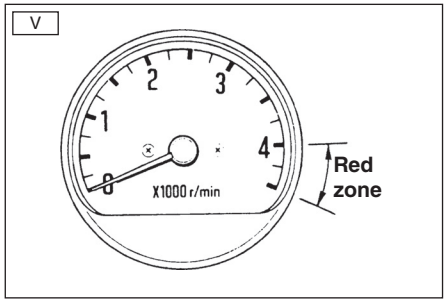

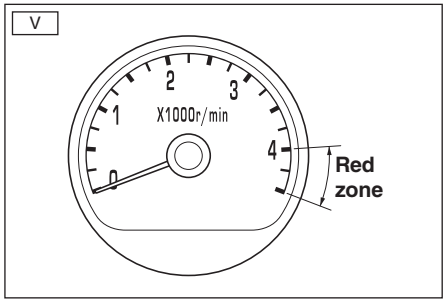

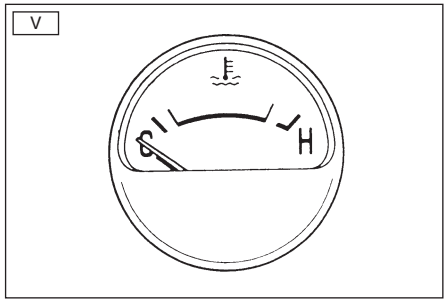

Engine tachometer V

The engine tachometer indicates the engine speed in rpm, the red zone represents over-running the engine.

NOTE

The calibration and the red zone of tachometer are various depending on the models fitted.

CAUTION

Never operate the vehicle with the tachometer needle in the red zone. Continued operation with the tachometer needle in the red zone can lead to serious engine damage.

Temperature gauge

The temperature gauge shows the engine coolant temperature when the starter switch is turned "ON". The letters "C" and "H" on the dial represent "cold" and "hot".

QKR-IE-1442_4805234_ALL.indb 2–7 2017/09/27 13:34:39

https://truckmanualshub.com/

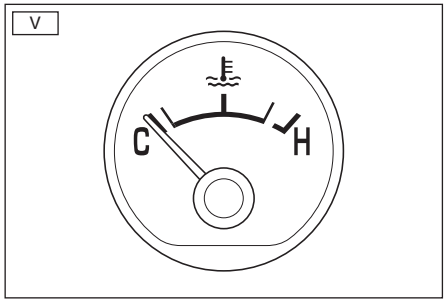

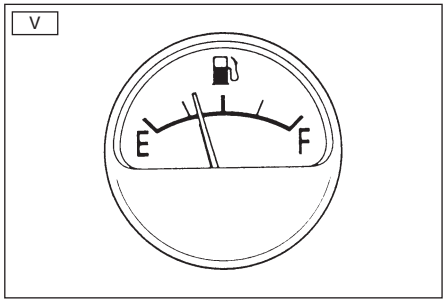

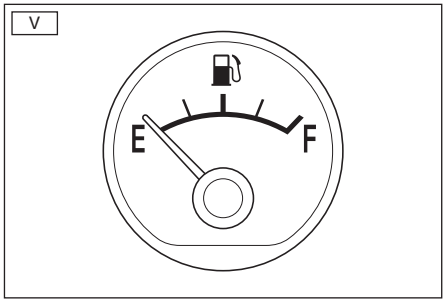

CAUTION

- ***If the gauge needle is beyond the red line, it indicates an engine overheating condition.***
  Stop the vehicle safely and follow the instructions given under the heading "Engine overheating" in "DRIVING" section of this manual.
- ***Continued operation of an overheated engine can result in serious engine damage.***

Fuel gauge

The fuel gauge indicates the level of fuel in the fuel tank. When the key is turned to the "LOCK" position:
the needle does not return to the E (empty) mark but remains at the appropriate fuel level.
The letters "F" and "E" represent "Full" and "Empty" respectively.

NOTE

Make a habit of refueling early and take care not to run short of fuel.

QKR-IE-1442_4805234_ALL.indb 2–8 2017/09/27 13:34:39

https://truckmanualshub.com/

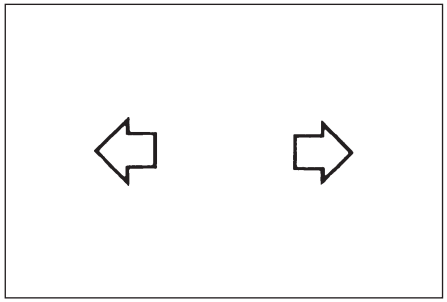

Turn signal indicator lights

When the turn signal switch or hazard warning flasher switch is turned on, the turn signal indicator light flashes to indicate the operation of the external turn signals or hazard warning flasher.

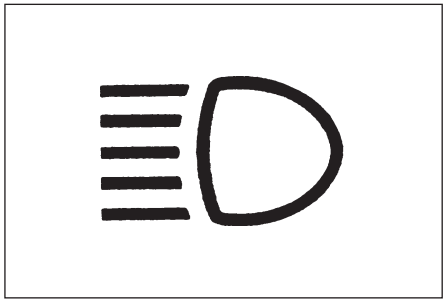

High beam indicator light

The high beam indicator light comes on when the head light high beams are in use.

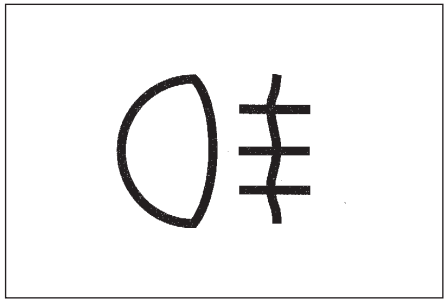

Rear fog indicator light V

The rear fog indicator light comes on when the rear fog light is in use.

QKR-IE-1442_4805234_ALL.indb 2-9 2017/09/27 13:34:40

https://truckmanualshub.com/

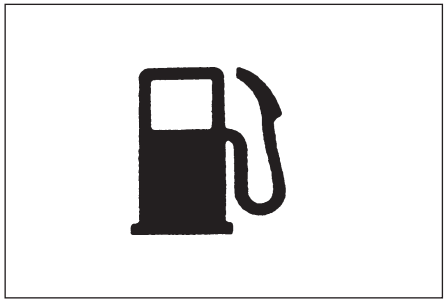

Fuel indicator light

The fuel indicator light comes on when the fuel in the tank is lower than at the specified level. (7 to 10 liters, 1.5 to 2.2 gal (UK)).
Fill up the tank as soon as possible. The indicator light comes on when the starter switch is turned to "ON" position and after starting the engine, it goes off normally.

NOTE

Driving on a road with many sharp curves may cause the fuel indicator light to blink intermittently. This is normal and should be ignored.

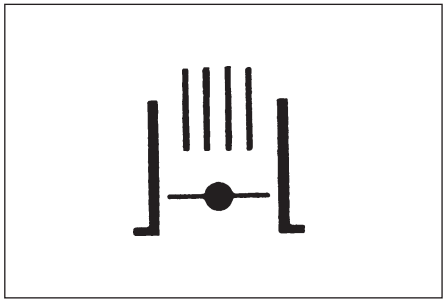

Exhaust brake indicator light OPT

When the exhaust brake switch is set to the "ON" position, the indicator light comes on.

NOTE

When traveling over an uneven road surface, the exhaust brake may be disengaged for short intervals even if the brake pedal is not depressed.

Parking brake indicator and Brake fluid level indicator light

The parking brake indicator light comes on when the parking brake lever is pulled with the starter switch "ON".
The brake fluid level indicator light comes on when the brake fluid in the reservoir is lower than the specified level.
The indicator light comes on when the starter switch is turned to the "ON" position and after starting the engine, it goes off normally.

QKR-IE-1442_4805234_ALL.indb 2-10 2017/09/27 13:34:40

https://truckmanualshub.com/

WARNING

If the light comes on while driving, stop the vehicle immediately and check the level of the brake fluid in the reservoir.

If the level is too low and braking force is lost, have the vehicle towed in for repairs.

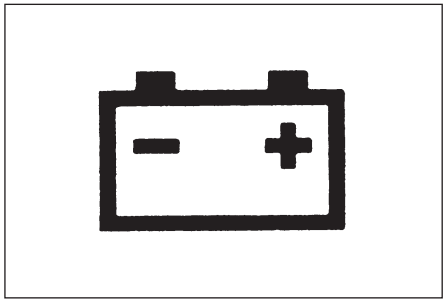

Battery/Generator indicator light

The battery/generator indicator light comes on when the starter switch is turned to the "ON" position and goes off when the engine is started and the generator circuit is brought into normal function.

NOTE

If the battery/generator indicator light comes on while driving, have the generator circuit checked at your nearest Isuzu dealer.

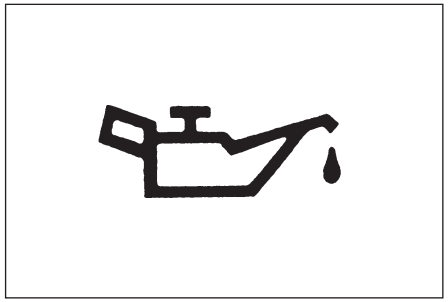

Oil pressure indicator light

The oil pressure indicator light warns about "Low oil pressure", and "Low oil level" by the oil level switch.

The oil pressure indicator light comes on when the starter switch is turned to the "ON" position and goes off when the engine is started.

QKR-IE-1442_4805234_ALL.indb 2–11 2017/09/27 13:34:40

https://truckmanualshub.com/

CAUTION

If the oil pressure indicator light comes on while driving, it indicates that the oil pressure is dangerously low. Stop the engine immediately and check the level of the oil in the engine crankcase. If the oil level is normal, have the lubricating system checked at your nearest Isuzu dealer. Do not run the engine if the light is continuously illuminated.

Water separator indicator light V

The indicator light comes on when the water level in the water separator on the fuel line is beyond the specified level.

NOTE

If the indicator light comes on while driving, stop the vehicle and drain the water immediately. Refer to the "DRIVING" section.

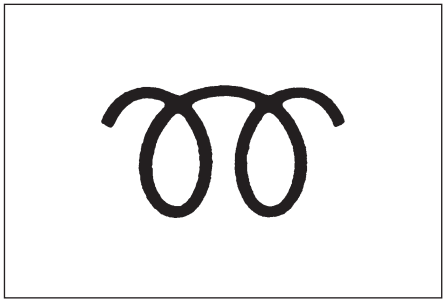

Glow plug indicator light

The glow plug indicator light comes on when the starter switch is turned to the "ON" position and goes off when the glow plug is sufficiently heated.

QKR-IE-1442_4805234_ALL.indb 2-12 2017/09/27 13:34:40

https://truckmanualshub.com/

4JH

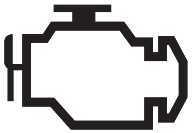

Check engine indicator light 4JH

The "CHECK ENGINE" light on the instrument panel is designed to indicate the need for system service. It will come on when the starter switch is in the "ON" position, but before the engine started, to let you know the bulb is working. (The light will stay on a short time after the engine starts.) Have the system repaired if the "CHECK ENGINE" light does not come on when the starter switch is in the "ON" position, but before the engine is started.

CAUTION

If the light comes on either intermittently or continuously while driving, service is required.

Even if the vehicle is driveable, and does not require towing, see your Isuzu dealer as soon as possible for service of the system. Continued driving without having the system serviced could cause damage to the emission control system. It could also affect fuel economy and driveability.

SVS (Service Vehicle Soon) indicator light V

The SVS indicator light will come on when the starter switch is in the "ON" position and the engine is not started, to let you know the bulb is working.
The indicator light will go off after the engine starts.
If the indicator light comes on during operation, immediately contact your Isuzu dealer for inspection.

QKR-IE-1442_4805234_ALL.indb 2–13 2017/09/27 13:34:40

https://truckmanualshub.com/

Seat belt warning light V
(for GCC model)

The seat belt warning light comes on when the driver does not fasten the seat belt with the starter switch "ON".

NOTE

This warning light goes off when the driver fastens the seat belt.

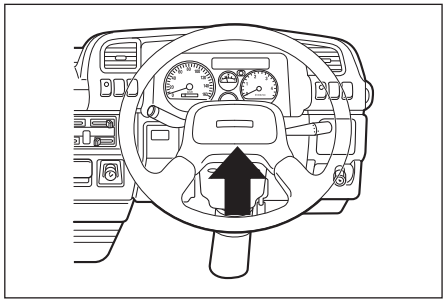

STEERING COLUMN CONTROLS

Steering wheel and horn button

The horn button on the steering wheel operates the horn.

WARNING

Never turn the steering wheel while the vehicle is stationary and never keep the steering wheel turned fully for a long period. The temperature of oil in the power steering oil pump will rise abnormally high and cause the insufficient lubrication, damage to the hose or deterioration of the seal. This may lead to the damage to the power steering oil pump and power steering unit etc. and as a result, the steering wheel operation may get heavy suddenly.

QKR-IE-1442_4805234_ALL.indb 2–14 2017/09/27 13:34:40

https://truckmanualshub.com/

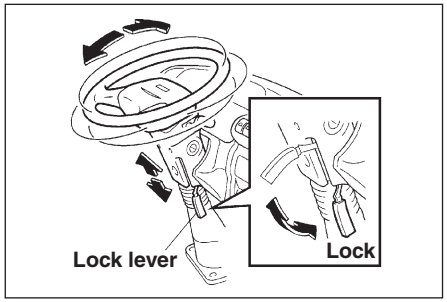

Adjustment procedure:

1. Release the steering column by rotating the lock lever to the upright position.
2. Sit upright in your seat and move the steering wheel up or down and the steering column back or forward as desired.
3. At the desired position, lock the column rotating the lock lever down.

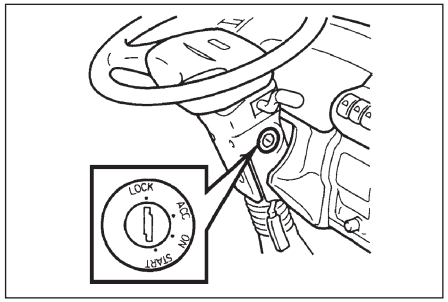

Fully adjustable steering wheel OPT

The steering wheel is adjustable in a back and forth direction and a vertical direction. Adjust the steering wheel position along with the driver seat for maximum comfort.

CAUTION

Fully tighten the lock lever after making adjustments. Always make an adjustment with the vehicle stationary and NEVER attempt to adjust while driving.

Starter switch

The starter switch has four positions as shown in the figure.

"LOCK": Normal parking position. Locks the steering and prevents normal use of the steering wheel.
The key can be removed only when the starter switch is in this position.

QKR-IE-1442_4805234_ALL.indb 2–15 2017/09/27 13:34:40

https://truckmanualshub.com/

WARNING

- ***If you need to turn off the engine with the vehicle in motion, turn the key only to "ACC". DO NOT turn the key to "LOCK". This will result in locking the steering wheel and loss of steering control.***
- ***Turning the engine off with the vehicle in motion is dangerous, as braking efficiency will be reduced.***

"ACC": You can use some electrical accessories when the engine is not running.

"ON": The "ON" position is for pre-heating and normal running.

"START": Turning the key to this position will start the engine. The key returns to the "ON" position when released.

CAUTION

Do not keep the starter engaged for more than 10 seconds.

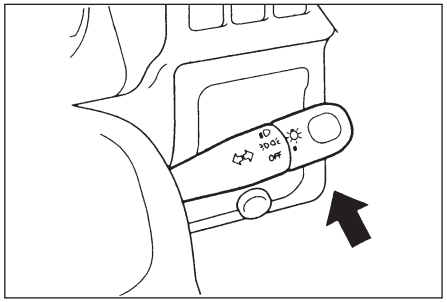

Combination switch lever

The combination switch lever consists of the light control switch, turn signal switch, dimmer switch and passing light switch. On the LHD model, this switch lever is on the left side of the steering column.

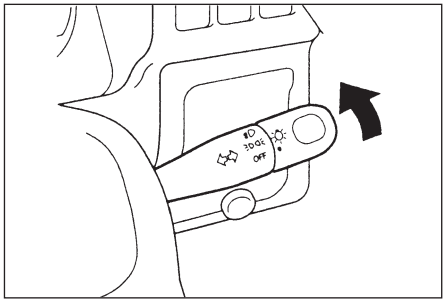

Light control switch

The control switch operates in three steps to operate the following lights:

1st step: Clearance lights, tail lights, license plate lights and instrument cluster lights.

2nd step: Head lights in addition to the above lights.

3rd step: Rear fog light in addition to the above lights.

QKR-IE-1442_4805234_ALL.indb 2-16 2017/09/27 13:34:40

https://truckmanualshub.com/

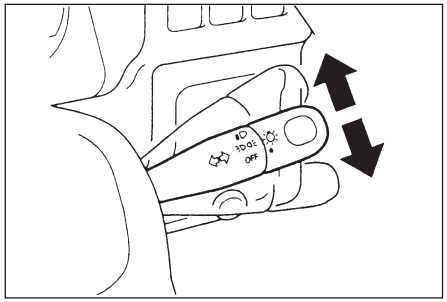

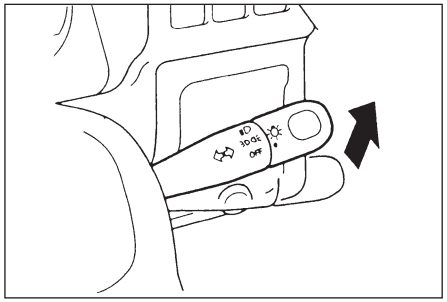

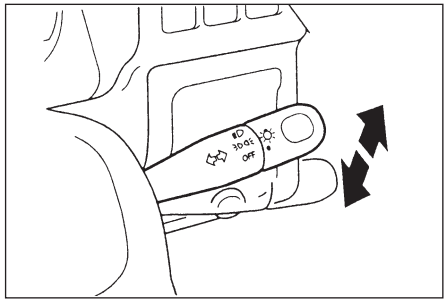

Turn signal switch

Move the switch in the direction of the turn being made so that the external turn signal lights operate and the turn signal indicator light on the instrument panel flashes. The switch returns automatically to the neutral position when steering wheel is returned to a straight-ahead position.

Cornering light V

When the head lights and a turn signal light are both turned on, the cornering light will automatically come on.

Dimmer switch

The head light beam is alternately switched from high to low or low to high each time the switch is raised. The high beam indicator on the instrument panel lights up when the head lights are on high beam.

Passing light switch

The head light high beam comes on and goes off each time the switch is raised and released with the light switch in either "OFF" or the first stop position. To give a signal of overtaking, operate the lever repeatedly so that the head lights flash in the daytime and at night the high and low beams come on alternately.

QKR-IE-1442_4805234_ALL.indb 2–17 2017/09/27 13:34:40

https://truckmanualshub.com/

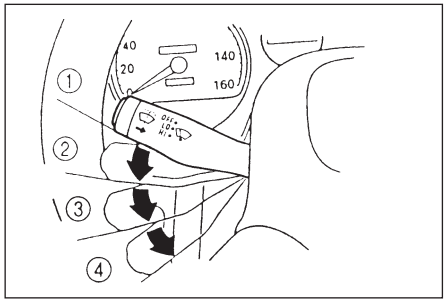

Windshield wiper switch lever

The windshield wiper switch has 3 (or 4) positions to control the windshield wipers.

① Off ② OPT Intermittent
③ Low speed ④ High speed

WARNING

In cold weather, warm the windshield with the defrosters before using the washer. This will help prevent icing which may block the driver's vision.

CAUTION

Do not operate the wipers when the windshield is dry. It may scratch the windshield glass. Clear ice or packed snow from the wiper blades before using the wipers. If they are frozen to the windshield, carefully loosen or thaw them.

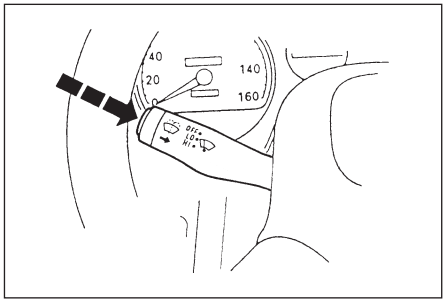

Windshield washer switch lever

Push and hold the center switch button so that the washing solution is squirted to the windshield.
On the LHD model this switch is on the right side of the steering column.

QKR-IE-1442_4805234_ALL.indb 2-18 2017/09/27 13:34:41

https://truckmanualshub.com/

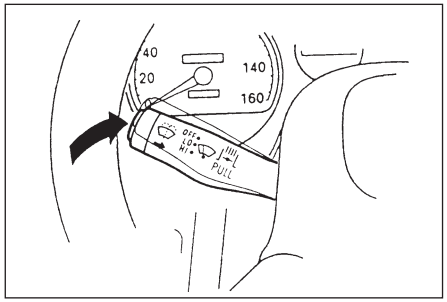

Exhaust brake switch OPT

Pull the exhaust brake switch upward to engage the exhaust brake and the indicator light on the instrument panel will light up.
The exhaust brake will disengage when the acceleration or clutch pedal is depressed or the transmission gearshift lever is shifted into neutral, but the indicator light will remain on until it is switched off on the column.

NOTE

- ***It is advisable to operate the exhaust brake when descending a slope or when stop-and-go driving is involved.***
- ***When the warm-up system is "ON", the exhaust brake will not be released until the engine is thoroughly warmed up, even if the transmission gearshift lever is in the neutral position.***
- ***If a buzzer is actuated while the exhaust brake is engaged, immediately stop the vehicle in a safe place and call for inspection.***

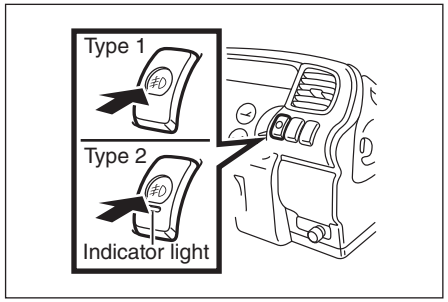

INSTRUMENT CLUSTER

Front fog light switch OPT

When fog or heavy mist reduce your forward vision, push this switch to turn the fog lights on.
The fog lights will operate only when the head lights low beams are in use. The indicator light in this switch will turn on when the front fog lights are operated.
To turn off the switch press it again.

QKR-IE-1442_4805234_ALL.indb 2–19 2017/09/27 13:34:41

https://truckmanualshub.com/

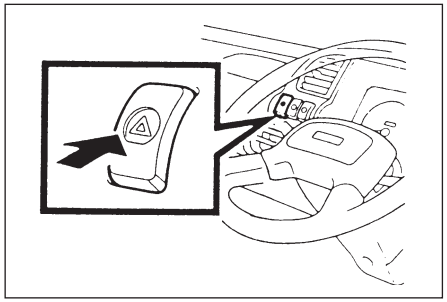

Hazard warning flasher switch

When the switch is pushed, all the turn signal lights are made to flash, regardless of the turn signal position.
To turn off the switch press it again.

CAUTION

- ***Use the warning flasher to warn other drivers that your vehicle is a traffic hazard, day or night.***
- ***Avoid stopping on a roadway if at all possible.***

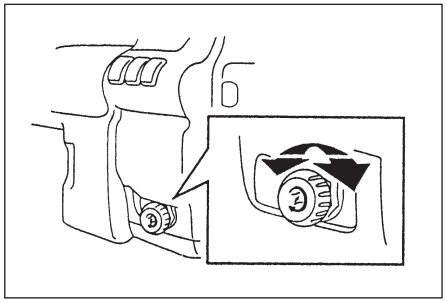

Idling control knob

Turning the knob clockwise (in the direction of the arrow) after cold starting of the engine will increase idling speed thereby facilitating smooth engine idling. Always drive with the knob returned to the home position.

WARNING

Do not use the idle control while the vehicle is in motion. This could reduce your ability to stop in an emergency, resulting in personal injury and/or property damage.

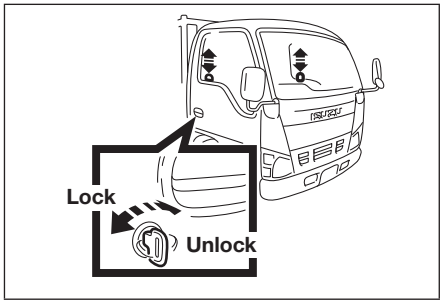

Central locking door V

Locking or unlocking the driver's door with either the key or the lock button will also lock or unlock the remaining door.
Locking or unlocking the passenger door with the key will also lock or unlock the other doors.
Locking or unlocking the passenger door with the lock button will not lock or unlock the remaining doors.

WARNING

Before driving, make sure that the doors are closed and locked, especially when young children are in the vehicle.

QKR-IE-1442_4805234_ALL.indb 2-20 2017/09/27 13:34:41

https://truckmanualshub.com/

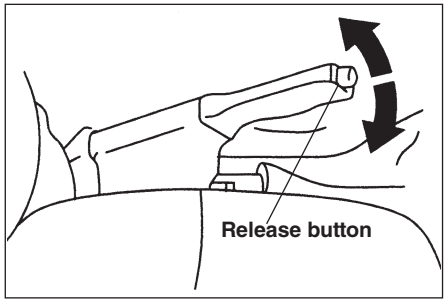

Parking brake lever

When parking the vehicle, fully apply the parking brake lever without pressing the release button. The parking brake warning light in the instrument panel will come on when the lever is pulled up.
To release the parking brake, pull upward slightly. Then depress the release button and push down all the way.
To help remind you, the brake system indicator light is designed to come on if the parking brake control is not fully released when the key is on.

WARNING

The indicator light has no relationship to the efficiency of the parking brake.

Always pull the parking brake lever as far up as possible when setting the parking brake.

Failure to fully set the parking brake could result in vehicle movement on an inclined surface.

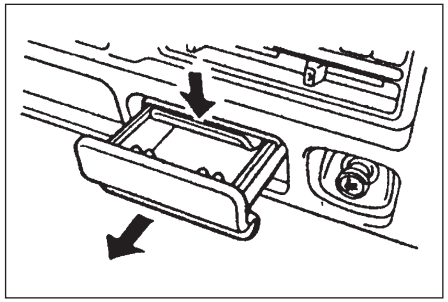

Ash tray

To use, pull the tray out. To clean, pull the tray out further while pushing down on the ash dump plate.

WARNING

- ***After using the ash tray, push it back in completely. If not, the flame of a cigarette may cause other cigarette butts to burn, resulting in a fire.***
- ***Never throw lit cigarette butts out the window. They not only litter the road and around but also can cause a roadside fire.***

QKR-IE-1442_4805234_ALL.indb 2-21 2017/09/27 13:34:41

https://truckmanualshub.com/

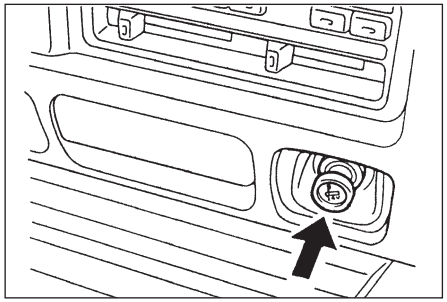

Cigarette lighter

To operate the lighter with the key switch in the "ACC" or "ON" position, push the light in all the way and then release it. The lighter will spring back to its normal position within about 15 seconds after being pushed in and when it is ready for use. Pull the lighter out and use it.

WARNING

If the lighter does not spring back after 18 seconds, it is faulty and must be pulled out in its normal position by hand.

CAUTION

- ***Avoid holding the lighter in by hand while it is heating, as damage to the heating element may result.***
- ***To substitute the cigarette lighter socket for an accessory power outlet, consult the nearest Isuzu Dealer.***
- ***If the cigarette lighter socket was used as an accessory power outlet by necessity, the inside of socket may be deformed. When the cigarette lighter is used with the deformed inside, it may cause failures such as that the red-hot cigarette lighter pops out or it does not come out as it is pressed in.***
- ***To use it once again as the cigarette lighter changing from the accessory power outlet, or to replace the broken cigarette lighter, use an Isuzu genuine part suitable for the vehicle. Do not use other cigarette lighters.***
- ***When cleaning the cigarette lighter, do not use too much force. It may cause a deformation.***
- ***Remove ashes and dirt inside the cigarette lighter socket and on the heater portion of cigarette lighter.***

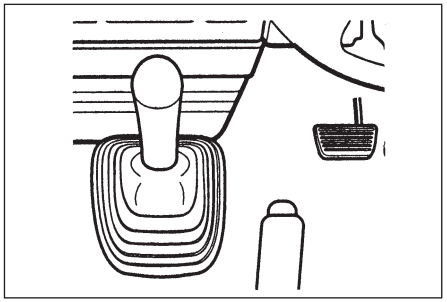

FLOOR CONTROLS

Transmission gearshift lever

When shifting the transmission, depress the clutch pedal completely. The gearshift pattern is shown on the lever knob. The back-up lights operate when shifted into reverse with the key switch in the "ON" position.
If a back-up warning buzzer is provided, the buzzer sounds when shifted to reverse. V

NOTE

Allow the vehicle to stop completely before shifting into reverse.

QKR-IE-1442_4805234_ALL.indb 2-22 2017/09/27 13:34:41

https://truckmanualshub.com/

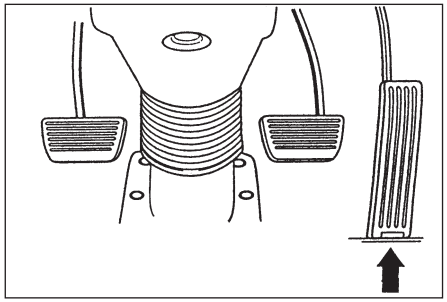

Accelerator pedal

To avoid an unnecessary increase in fuel consumption, the accelerator pedal should be operated smoothly and reasonably.

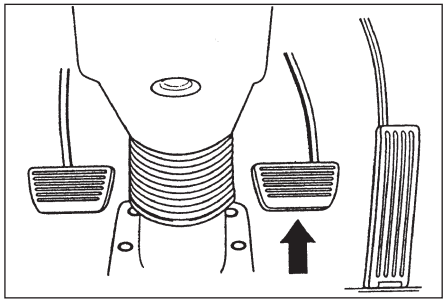

Brake pedal

Avoid hard stops by depressing the foot brake pedal smoothly. When descending a slope, it is always advisable to use the foot brake in combination with the engine braking effect.

NOTE

If the engine stops while the vehicle is running, the brake booster is not effective and braking efficiency is reduced. Vehicle stopping is still possible by depressing the brake pedal strongly.

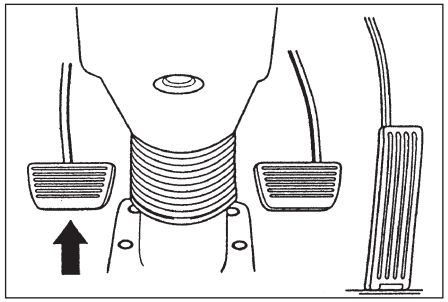

Clutch pedal

The clutch pedal should be fully depressed when disengaging. If this is not done, grating of the gears may result.

NOTE

Do not allow your foot to rest on the pedal when not using the clutch.

QKR-IE-1442_4805234_ALL.indb 2-23 2017/09/27 13:34:42

https://truckmanualshub.com/

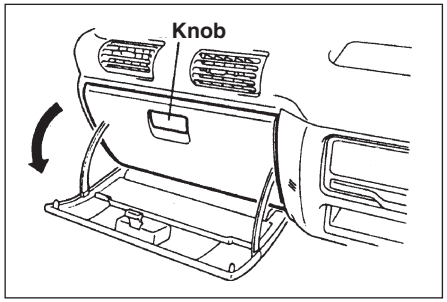

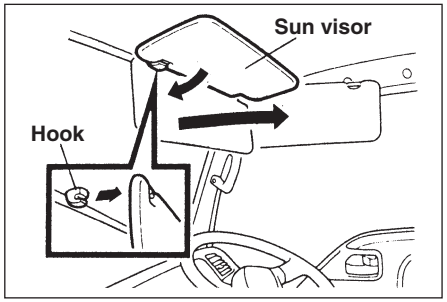

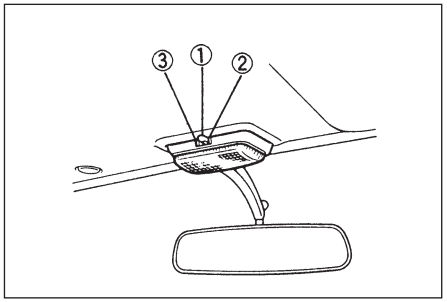

OTHERS

Glove box

The glove compartment is provided on the passenger side end of the instrument panel.
To open the glove compartment, pull the compartment lid out while pulling the knob outward.

WARNING

Avoid driving with the glove box lid open. In the event of a sudden stop or an accident, it could cause injuries.

Sun visor

Lower the sun visors when you are facing the sun. The sun visors can be moved to the side by unhooking them at the ends. For passenger seat side the hook is on the opposite side. OPT

Dome light

The dome light is operated at any key switch position.

① "OFF" position:
The light remains off.

② "DOOR" position:
The dome light turns on when the driver side door is opened.

③ "ON" position:
The light turns on regardless of the door position.

QKR-IE-1442_4805234_ALL.indb 2-24 2017/09/27 13:34:42

https://truckmanualshub.com/

NOTE

To prevent the light from being left on and discharging the battery, be sure to completely close the doors.

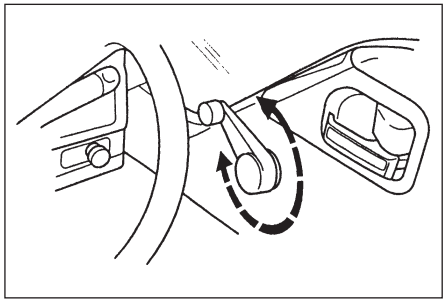

Door window

Turn the handle to raise or lower the door window.

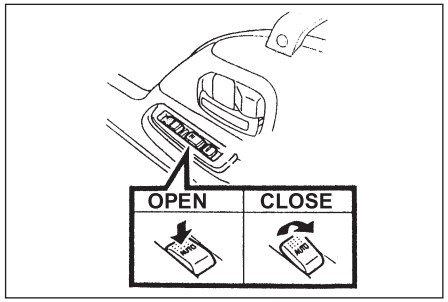

Power window switch on the driver's door V

When the starter switch is in the "ON" position, you can open and close the window on all doors by operating the power window switches on the driver's door side.

Lightly press the switch end, and the window will continue to open until the switch is released. Press the switch end hard, and the window will open automatically to a full open position even if the switch is released. To stop the window on its way, pull the switch end lightly.

Lightly pull the switch end, and the window will continue to close until the switch is released.

QKR-IE-1442_4805234_ALL.indb 2-25 2017/09/27 13:34:42

https://truckmanualshub.com/

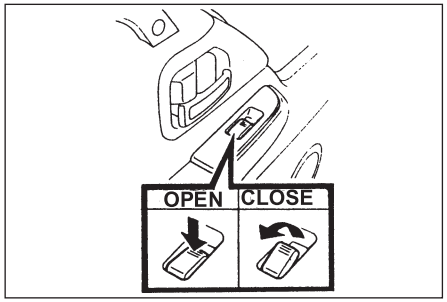

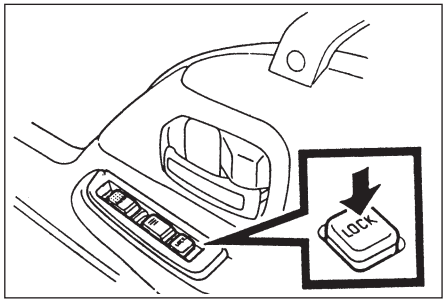

WARNING

- ***To ensure the safety of children and others make sure that all passengers have their hands, etc. inside the vehicle before closing the windows.***
- ***Remove the key when leaving the vehicle to avoid unintentional window operation by children.***

Power window switch on the passenger door V

When the starter switch is in the "ON" position, you can open and close the window by operating the power window switch on the passenger door.

Press the switch end, and the window will continue to open until the switch is released.

Pull the switch end, and the window will continue to close until the switch is released.

Power window lock V

When the power window lock switch is in the "ON" position, you cannot open or close by means of the power window switch on the driver's door or passenger door. Press the lock switch once again and the power window will be unlocked.

QKR-IE-1442_4805234_ALL.indb 2-26 2017/09/27 13:34:42

https://truckmanualshub.com/

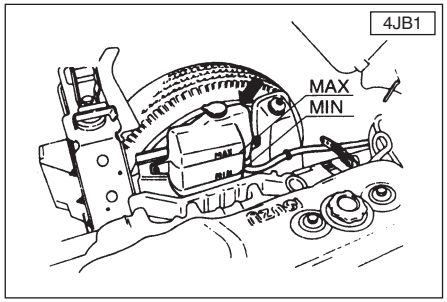

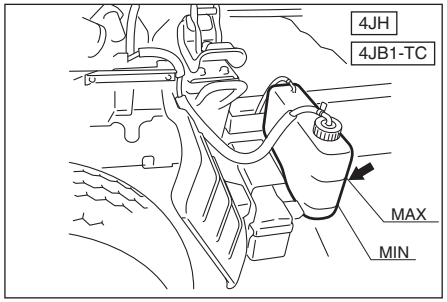

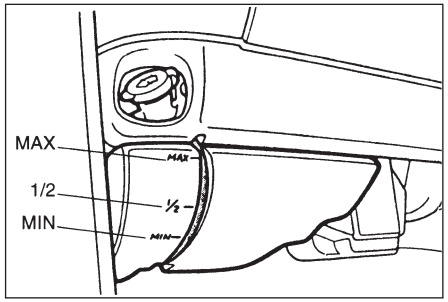

Radiator reserve tank

The radiator reserve tank is located on the left side of the engine compartment or on the behind the cab.

WARNING

Engine coolant level check or replenishment should be made at the reserve tank and the radiator cap should not be removed unless necessary. Refer to the section of "SERVICE AND MAINTENANCE" for more details.

Windshield washer tank

The windshield washer tank is located under passenger side of the instrument panel.
The washer tank should be filled only with tap water or Isuzu genuine washer solution.

WARNING

In cold weather, warm the windshield with the defrosters before using the washer.
This will help prevent icing which may block the driver's vision.

QKR-IE-1442_4805234_ALL.indb 2–27 2017/09/27 13:34:42

https://truckmanualshub.com/

CAUTION

- ***Do not use radiator coolant in the windshield washer, as it could cause paint damage.***
- ***Clear ice or packed snow from the wiper blades before using the wipers.***

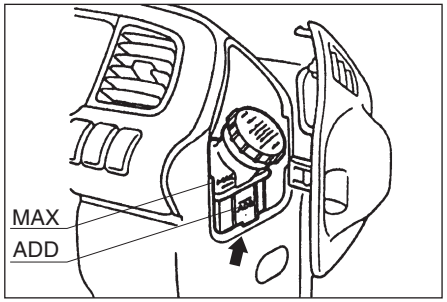

Brake and clutch fluid reservoir

The fluid reservoir is beside the meter panel of the driver's side.

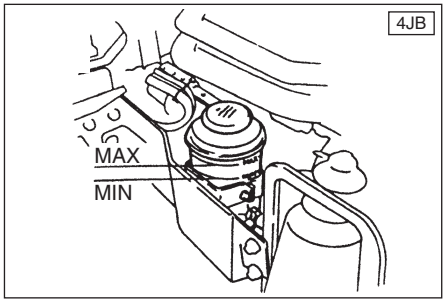

Power steering fluid tank V

The power steering fluid tank is located on the right side of the engine compartment 4JB or on the right side behind the cab 4JH. It has a removable plastic shield cover.

QKR-IE-1442_4805234_ALL.indb 2-28 2017/09/27 13:34:42

https://truckmanualshub.com/

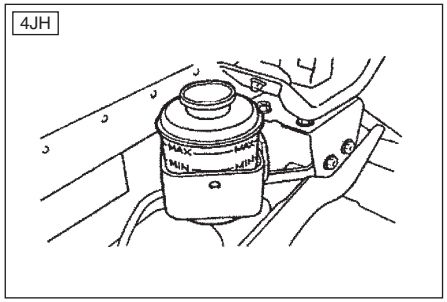

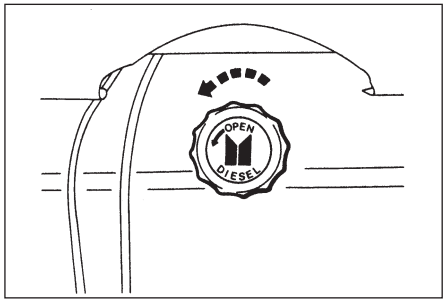

Fuel tank filler cap

The fuel tank filler cap is provided on the fuel tank. To open, turn the cap counterclockwise.

WARNING

If you need to replace the fuel filler cap, use only a genuine Isuzu fuel filler cap. The use of an improper fuel filler cap could cause fuel spillage in the event of an accident. The use of an improper fuel filler cap could also affect the fuel system and the emission control system.

Since fueling with the engine running may cause a fire, be sure to stop the engine before fueling.

Keep fire away when fueling. A fire may occur due to fuel catching fire.

Be sure to wipe off the fuel that is spilled at fueling.

Make sure that the fuel cap is tightly closed after fueling.

NOTE

Always use diesel fuel.

Use of low quality fuel may adversely affect to the engine parts, and cause failure.

Use of other than specified fuel may adversely affect to the engine or emission control system and cause failure. For models conforming to Euro IV emission standards, be sure to use low-sulfur diesel fuel (containing sulfur of 50 ppm or lower) or extra-low-sulfur diesel fuel (containing sulfur of 10 ppm or lower).

If other than specified diesel fuel is used, the vehicle may not conform to specifications.

QKR-IE-1442_4805234_ALL.indb 2–29 2017/09/27 13:34:42

https://truckmanualshub.com/

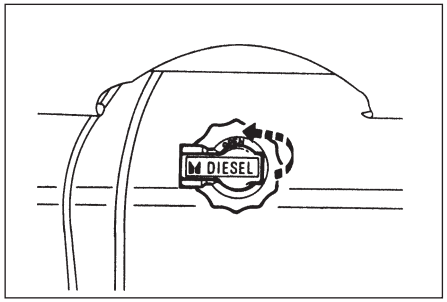

Fuel tank filler cap with key OPT

Open the filler lid and unlock and lock with the key. Turn the filler cap counterclockwise to remove it.

NOTE

Do not use any additive fuel or water treatment.

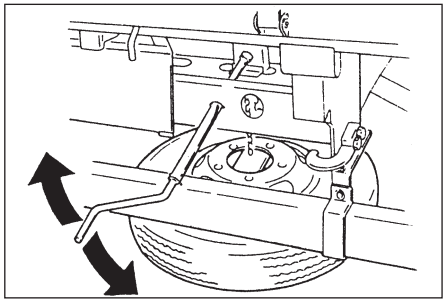

Spare wheel hanger

The spare wheel is secured to either the rear of the frame or the left side of the frame with a chain. To lower the spare wheel, insert the handle into the hole in the rear of the vehicle to engage the catch and turn the handle counterclockwise.

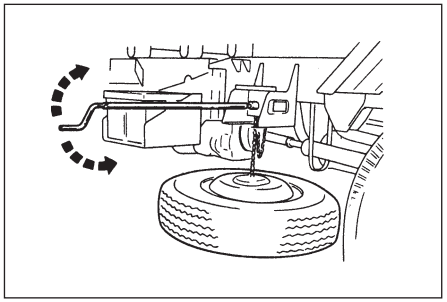

To raise, turn the handle clockwise until it stops. Give an additional tug on the handle to securely hold the spare wheel in position of stowage.

WARNING

Turn the handle clockwise to raise the spare wheel, give a final turn by hand (with a force of 20 to 50 kg (44 to 110 lbs)) and make sure the spare wheel is securely fixed in position.

Be sure the spare tire assembly is properly secured to prevent it from becoming a hazard in the event of a sudden stop or an accident.

QKR-IE-1442_4805234_ALL.indb 2-30 2017/09/27 13:34:42

https://truckmanualshub.com/

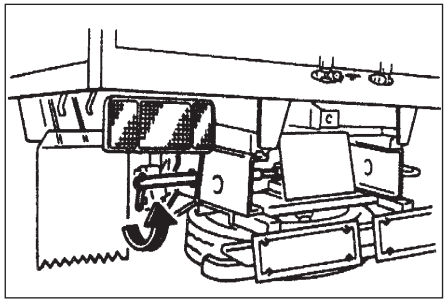

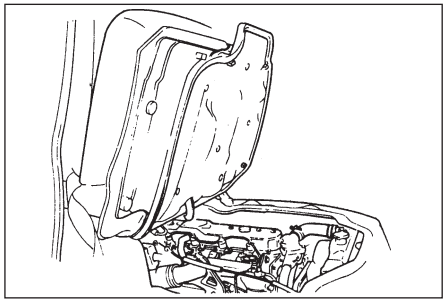

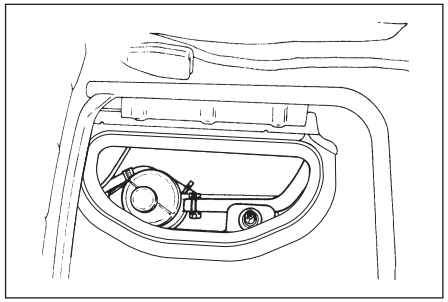

Engine inspection cover

To gain access to the engine, release the catch hooks and raise the entire seat cushion. The cover can be held up by a strap, permitting engine inspection and adjustment.

Engine inspection sub cover (Non tilt cab)

To gain more access to the engine compartment, raise the driver's seat cushion and remove the sub cover.

QKR-IE-1442_4805234_ALL.indb 2–31 2017/09/27 13:34:43

https://truckmanualshub.com/

Tilt cab

When inspecting or servicing the engine, the cab can be tilted to gain access to the engine compartment.

WARNING

To prevent personal injury, keep hands, tools and clothing clear of the engine cooling fan when the engine is running.

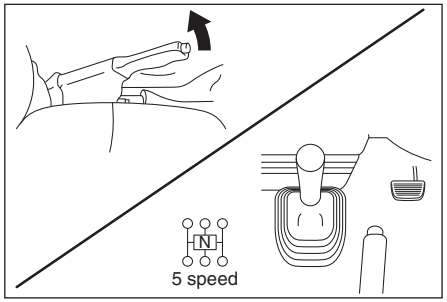

1. Preparation for cab tilting.

WARNING

- ***Park the vehicle on level ground and check that there is sufficient space in front of the cab and above the cab.***
- ***Set the parking brake firmly.***
- ***Put the gearshift lever in the neutral position.***
- ***Keep the interior of the cab free from items that are liable to fall.***
- ***Close the doors completely.***

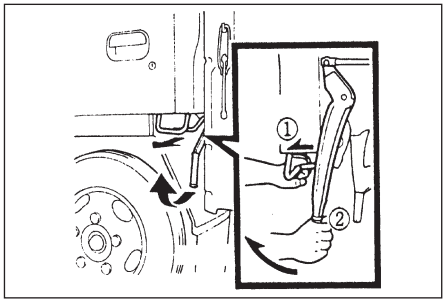

2. Squeeze the lock lever, and pull the cab tilt out and up.

QKR-IE-1442_4805234_ALL.indb 2–32 2017/09/27 13:34:43

https://truckmanualshub.com/

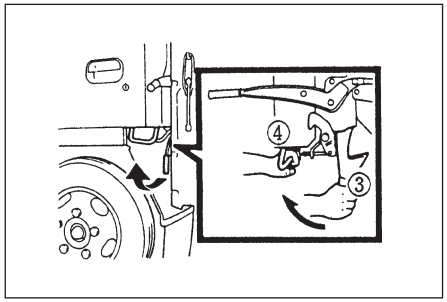

3. Pull the safety lever ③ while holding the assist handle ④ to prevent abrupt raising of the cab.

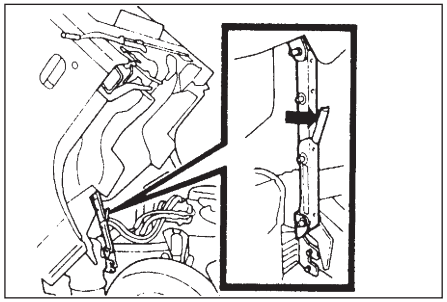

4. Raise the cab to the stop position and check that the cab stay is locked.

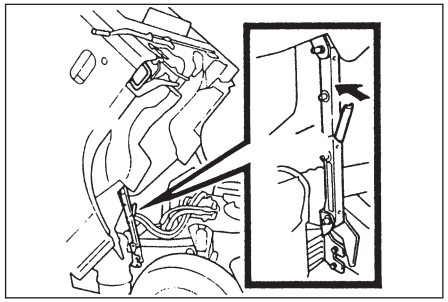

5. To lower the cab, unlock the cab stay by pulling the stay rearward. Lower the cab by holding the assist handle.

QKR-IE-1442_4805234_ALL.indb 2–33 2017/09/27 13:34:43

https://truckmanualshub.com/

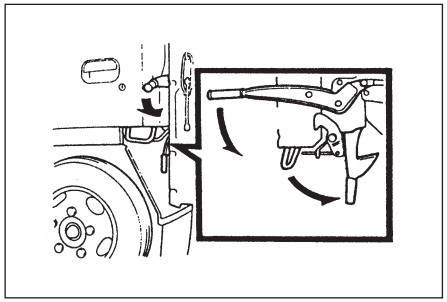

6. To lock the cab, push the cab tilt lever downward firmly, then visually check that the cab is locked with the main hook and tilting lever securely.

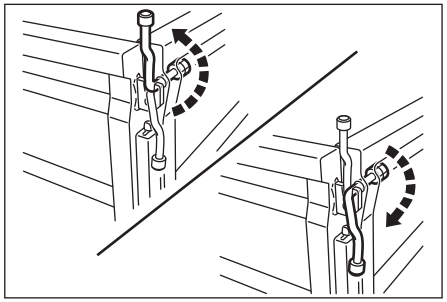

Rear body

Opening and closing rear gate:

Turn the left and right levers up 180°, release the locks and open the gate. To close, shut the gate then lower the lever to secure the gate.

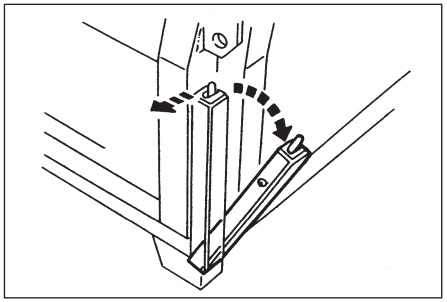

Opening and closing left and right side gates:

1. Release the rear gate locks.
2. Release the vertical lock by sliding the lock lever to the left and lower the lever.

QKR-IE-1442_4805234_ALL.indb 2–34 2017/09/27 13:34:43

https://truckmanualshub.com/

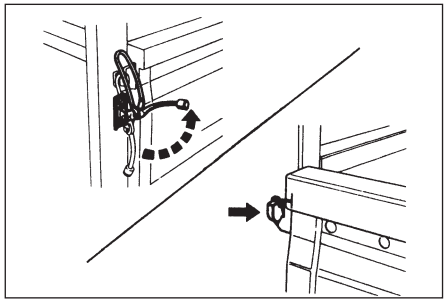

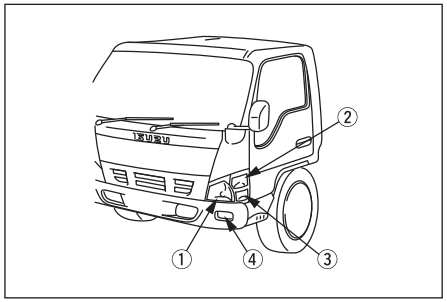

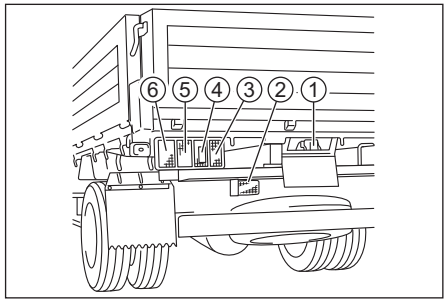

3. Release the front hook by raising the hook lever at the front of the gate.
4. The front of the gate is temporarily secured by the gate hold at this time. To open the gate, pull it with some force.

   To close the gate, lock the front of the gate securely with the hook lever, push in the vertical lock of the rear gate and lock the gate with the lever.

External lights
Front side:

① Head lights
② Turn signal lights
③ Clearance lights / Cornering lights
④ OPT Fog lights

Rear side:

① License plate light
② V Rear fog light
③ Back up lights
④ Reflectors
⑤ Tail and stop lights
⑥ Turn signal lights

QKR-IE-1442_4805234_ALL.indb 2–35 2017/09/27 13:34:43

https://truckmanualshub.com/

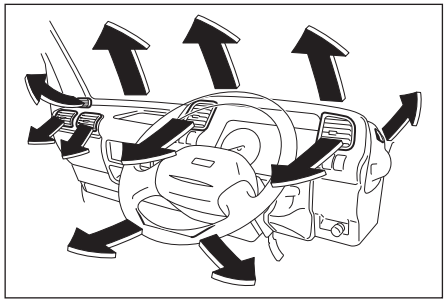

Heater-defroster OPT

The air flows out from the outlets shown in the figure.

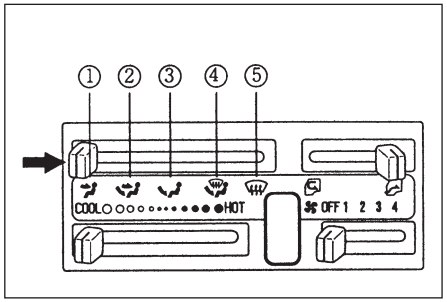

Air outlet select lever:

The select lever is used to control the mode of operation.

① FACE (Air to your face)
② BI-LEVEL (Air to your face and foot)
③ FOOT (Air to your foot)
④ FOOT/DEF. (Air to your foot and windshield)
⑤ DEF. (Air to windshield)

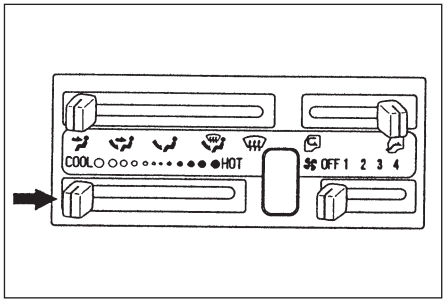

Temperature lever:

The temperature lever is for temperature control (through controlling of the hot air flow rate).

QKR-IE-1442_4805234_ALL.indb 2-36 2017/09/27 13:34:43

https://truckmanualshub.com/

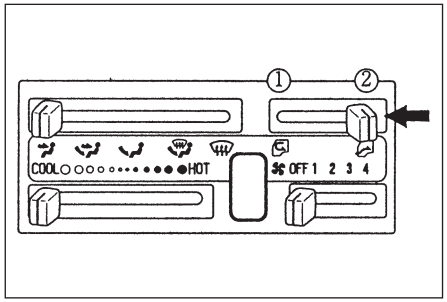

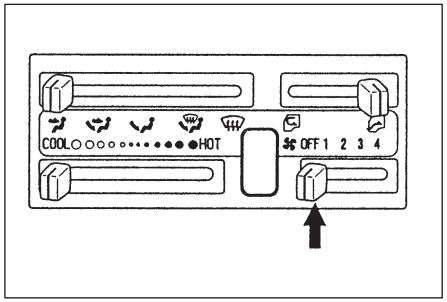

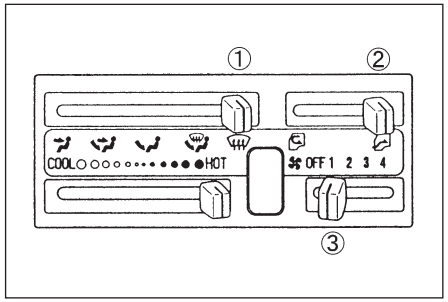

Air source select lever:

The air source select lever controls the setting of the air intake between the outside air and the circulation.

① Air circulated in the vehicle.

② Outside air brought into the vehicle.

Fan blower switch:

The fan blower switch controls the volume of air delivery in four steps.

Windshield demisting:

Set the air outlet select lever ① and air source select lever ② as shown in the figure, and slide the fan blower switch ③ on.

QKR-IE-1442_4805234_ALL.indb 2–37 2017/09/27 13:34:44

https://truckmanualshub.com/

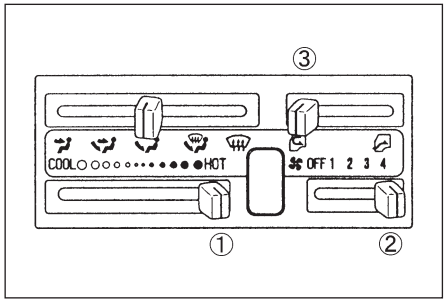

Heating:

Set the temperature lever ① as shown in the figure and slide the fan blower switch ② on. When you want to warm up quickly, set the air source select lever ③ as shown in the figure and slide the fan blower switch to the "4" position.

NOTE

Windshield is often misted up when the air source select lever ③ is set as shown. To demist, slide the lever ③ to the far right.

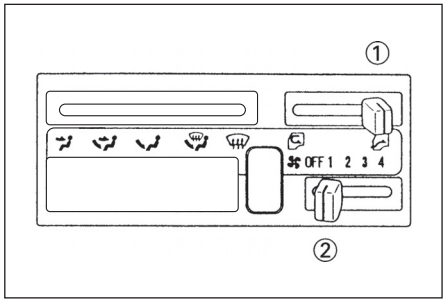

Power ventilator (on models with and without heater):

The fan blower ② switch can be in any position except "OFF".
Set the air source lever ① as shown in this figure.
Fresh air will then be drawn in from outside the vehicle.

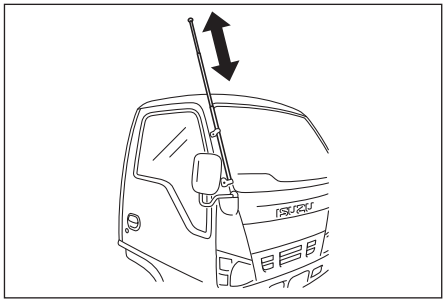

Antenna

Pull out the antenna to gain sensitivity. The antenna should be fully extended when the radio is to be used.
Retract the antenna before entering an area with restricted headroom.

QKR-IE-1442_4805234_ALL.indb 2–38 2017/09/27 13:34:44

https://truckmanualshub.com/

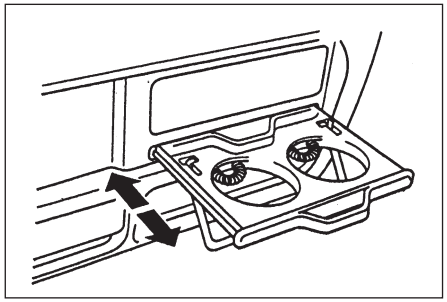

Cup holder OPT

In the center of the dash, there is a cup holder in which two beverage cups or cans etc. can be placed.

CAUTION

Do not place a cup that is too full in the cup holder. Spillages could cause damage to the electrical circuits. If there is a spill, wipe it up immediately with a dry cloth.

QKR-IE-1442_4805234_ALL.indb 2–39 2017/09/27 13:34:44

https://truckmanualshub.com/

- NOTE -

QKR-IE-1442_4805234_ALL.indb 2–40 2017/09/27 13:34:44

https://truckmanualshub.com/

BEFORE DRIVING YOUR VEHICLE

- **Operation of controls..... 3–1**
- **Driver's check list (Regular inspection) 3–10**

Proper care and driving is important not only in extended service life of your vehicle, but also in improved fuel and oil economy. Drive carefully and defensively.

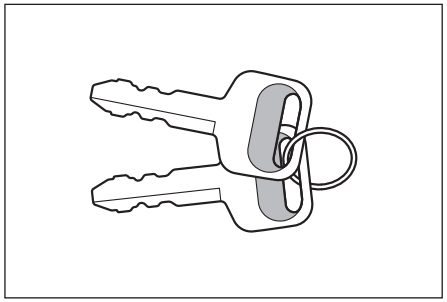

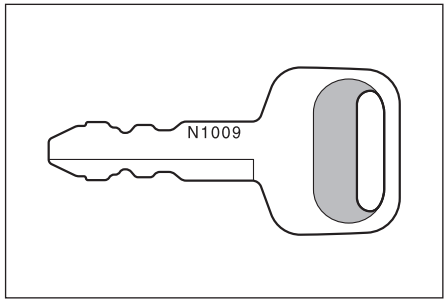

OPERATION OF CONTROLS

Key

This key is used for the starter switch and the door lock. The code number of each key is stamped on it.

Record the key number and keep it in a safe place such as your wallet, NOT IN THE VEHICLE.

NOTE

In the event that the original keys are lost, duplicates can be made by your Isuzu dealer using the key code information.

QKR-IE-1442_4805234_ALL.indb 3–1 2017/09/27 13:34:44

https://truckmanualshub.com/

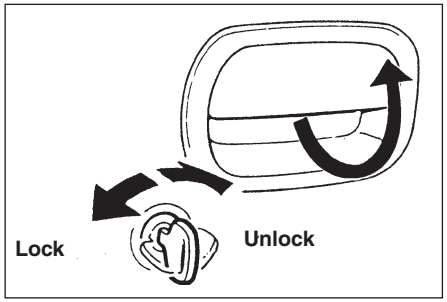

Outside door handle

The doors can be opened by pulling the outside door handle.
Doors can be locked by inserting the key in the door key hole and turning it.

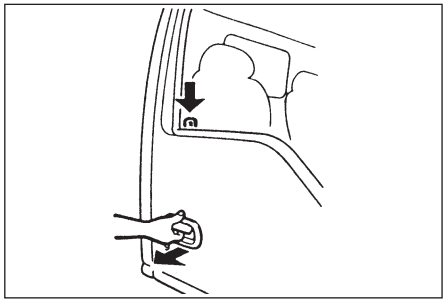

Door lock (Outside)

The doors can be locked from outside without using the key by setting the door lock lever on the door inside to the "lock" position and closing the door with the outside handle pulled outward.

NOTE

Avoid leaving the key inside.

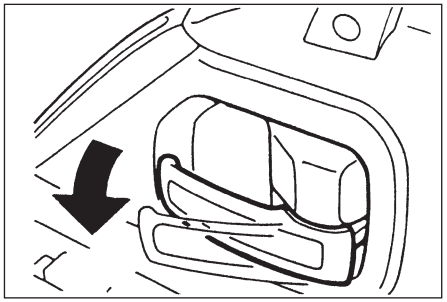

Inside door handle

The doors can be opened by pulling the inside door handle.

QKR-IE-1442_4805234_ALL.indb 3–2 2017/09/27 13:34:44

https://truckmanualshub.com/

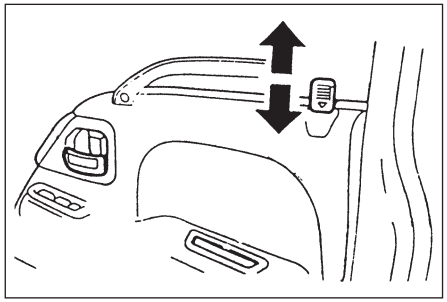

Door lock (Inside)

The doors can be locked by pressing the door lock lever after closing the door.

WARNING

- ***When driving keep doors locked. Locked doors will provide maximum protection for both passenger and driver. When seat belts (if so equipped) are properly used and all the doors are locked, it is highly improbable that anyone would be thrown from the vehicle in the event of an accident.***
  Locking the doors will also discourage intruders while the vehicle is temporarily stopped.
- ***When leaving the vehicle unattended, shut off the engine and lock all doors.***

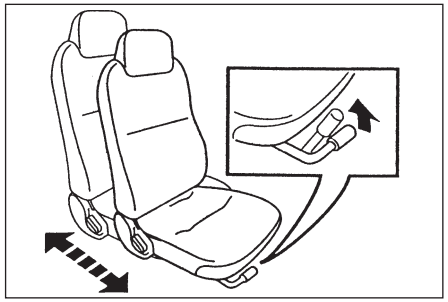

Driver's seat

The driver's seat may be adjusted forward or backward by pulling up the lever at the front of the seat and then using your body to move the seat to the desired position. Let go of the lever at the desired position.

QKR-IE-1442_4805234_ALL.indb 3–3 2017/09/27 13:34:44

https://truckmanualshub.com/

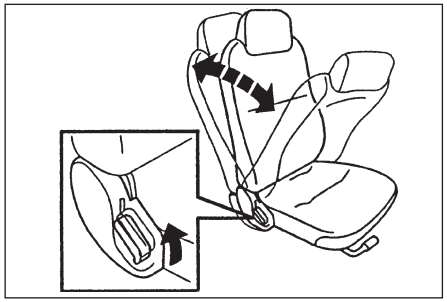

Front seatbacks can be tilted backward if so desired, using the lever on the door side of each front seat. Raise the lever and the front seatback will tilt forward. Raise the lever and adjust the seatback to the desired position. Keep seat belt and latch clear of the seat when you tilt the folding seats forward or backward. This helps to prevent damage to the seat belt system.

WARNING

- ***Use caution when adjusting the seat, as failure to do so could cause injury.***
- ***Never allow children to adjust their seats themselves; an adult should adjust the seat for occupants who are children.***
- ***Adjust the seat only before you start driving. Adjusting the seat while the vehicle is in motion must be avoided not only because the unlocked seat will move back and forth unstably, preventing you from taking the correct position, but might also cause you to lose control of the vehicle, possibly resulting in an accident.***

- ***Try to move the seat without unlatching it after making adjustments to check that it is completely locked. A loosely locked seat may move unexpectedly and your position might then become unstable; this could lead to an accident. Take the vehicle to your Isuzu Dealer for service if you find that your seat adjusters do not latch. In addition, the seat belt will not operate properly if the seatback is not completely locked.***
- ***Driving with the seat excessively reclined could be very dangerous in the event of a collision or sudden stop. Raise the seatback, and apply the seat belt correctly while sitting straight in the seat.***
- ***Do not place a cushion or similar object between your back and the seatback. Doing so not only affects the stability of your driving position but also prevents the seat belt from working effectively in the event of a collision.***

WARNING (Continued)

QKR-IE-1442_4805234_ALL.indb 3–4 2017/09/27 13:34:44

https://truckmanualshub.com/

WARNING (Continued)

- ***Do not place any objects under the seat. If there are any objects under the seat, the seat could be locked in an improper position.***
- ***Before making adjustments, check that the seat rails are free of anything that could obstruct the locking of the seat. Be careful that your hand or foot does not become trapped in the seat or rails when adjusting the seat.***
- ***When adjusting the seat, be careful that the seat does not hit passengers or objects. Doing so could cause injury to passengers, or damage objects.***
- ***Make sure not to hit passengers or luggage when adjusting your seat.***

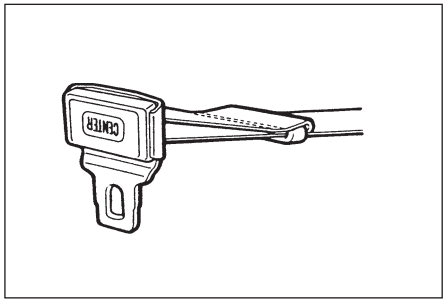

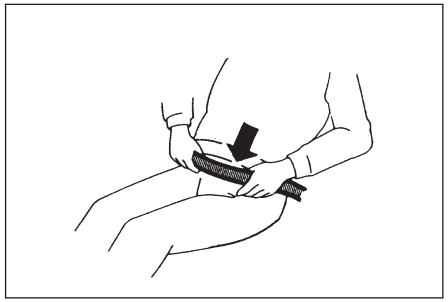

Seat belt (2-points)

1. Sit up straight and well back in the seat.
2. Take hold of the latch plate at an angle to the strap and slide it toward the front of the vehicle.
   Then pull it slowly across your lap and push the latch plate into the buckle until it clicks.
3. Position the lap belt across the lap as low on the hips as possible. Then, adjust to a snug fit by holding the free end of the strap and pulling it through the latch plate until the lap belt is snug across the lap. This reduces the risk of sliding under the belt during an accident.

QKR-IE-1442_4805234_ALL.indb 3–5 2017/09/27 13:34:45

https://truckmanualshub.com/

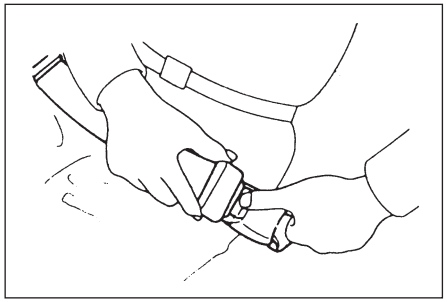

4. To unfasten the belt, push in the button on the buckle.

WARNING

- ***A snug fit with the lap belt positioned low on the hips is necessary to lessen the chance of injury and/or a degree of injury in an accident. This spreads the force of the lap belt over the hip bone instead of across the abdomen.***
- ***Never use the same seat belt for more than one person at a time. A seat belt worn by more than one person will not provide adequate protection in the event of a collision.***

- ***Never wear twisted seat belts.***
- ***Be very careful not to damage seat belts or seat belt buckles by pinching them in the seat or the door.***
- ***Too much slack could increase the amount of injury because the belt would not be able to properly restrain you in an accident.***

QKR-IE-1442_4805234_ALL.indb 3–6 2017/09/27 13:34:45

https://truckmanualshub.com/

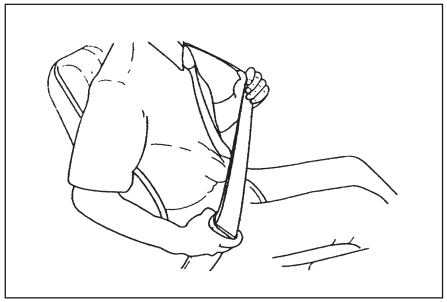

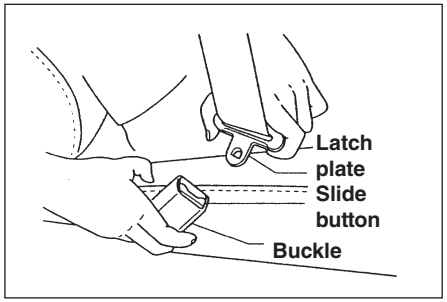

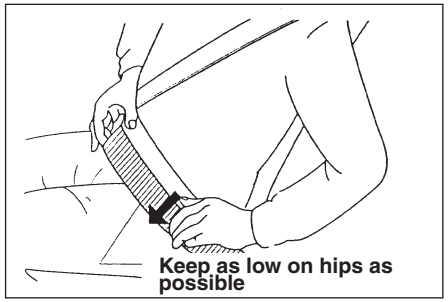

Seat belt (3-points)

1. Adjust the seat as needed and sit well back and straight up. Grasp the latch plate and:
   - Pull the belt as far as it will reach across your lap.
   - Hold the latch plate at an angle to the strap and slide it further (toward the front of the vehicle).
   - Then pull it slowly across your lap and push it into the buckle until it clicks. If the retractor locks before the latch plate reaches the buckle, let the belt retract slightly, then withdraw it more slowly than before.
2. To reduce the risk of sliding under the belt during a collision, position the belt across your lap as low on your hips as possible and adjust it to a snug fit by pulling the "shoulder" portion upward through the latch plate.

   The lap-shoulder belt is designed to lock during a sudden stop or impact. At other times it should move freely.

CAUTION

To help reduce the risk of personal injury in an accident, if a shoulder belt is on or very close to a child's face or neck, move the child toward the center, away from the shoulder belt.

3. To unfasten the belt, push the button on the buckle. The belt should retract when the buckle is unlatched but hold the latch plate as it does so, to keep it from hitting people or nearby objects. To help prevent damage to the safety belt and interior trim, before closing the door be sure the belt is fully retracted and the latch plate is out of the way.

QKR-IE-1442_4805234_ALL.indb 3–7 2017/09/27 13:34:45

https://truckmanualshub.com/

Seat belt inspection and care:

- Periodically inspect belts, buckles, latch plates, retractors and anchors for damage that could lessen the effectiveness of the restraint system.
- Keep sharp edges and damaging objects away from belts.
- Replace belts if cut, weakened, frayed or subjected to collision loads.
- Check that anchor mounting bolts are tight to the floor.
- Have questionable parts replaced.
- Keep seat belts clean and dry.
- Clean only with mild soap solution and lukewarm water.
- Do not bleach or dye belts since this may weaken belts.
- Care should be taken to avoid contamination of the strap with polishes, oils and chemicals, and particularly battery electrolyte.
- No modifications or additions should be made by the user that will affect its function.

CAUTION

It is important that you understand how to correctly wear a seat belt. You should also ensure that all occupants wear a properly adjusted seat belt whenever the vehicle is moving.

General notice

In the interest of safety, seat belts should be checked regularly. Your dealer will inspect and check the belts for you as part of the normal guardian maintenance service.
Never attempt to modify or change the seat belt away from the original specification as this will affect the operation of the belts and reduce their effectiveness, in preventing injury in an accident.

QKR-IE-1442_4805234_ALL.indb 3–8 2017/09/27 13:34:45

https://truckmanualshub.com/

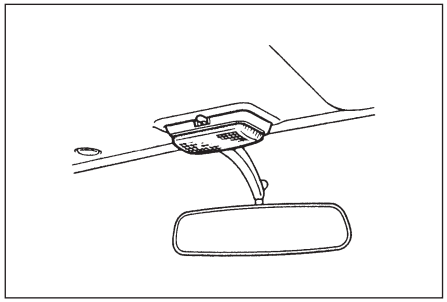

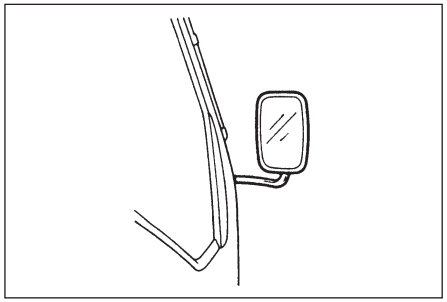

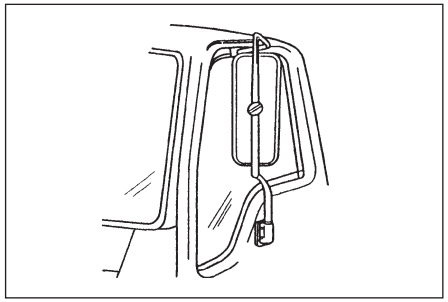

Mirrors

Inside rearview mirror

To adjust, push the mirror right or left, and up or down.

Outside rearview mirrors

Adjust the outside rearview mirrors so you can see not only each side of the road behind you but also each side of your vehicle. This helps you determine your relation to the objects behind.

WARNING

Do not adjust the exterior mirrors while the vehicle is moving.

QKR-IE-1442_4805234_ALL.indb 3–9 2017/09/27 13:34:45

https://truckmanualshub.com/

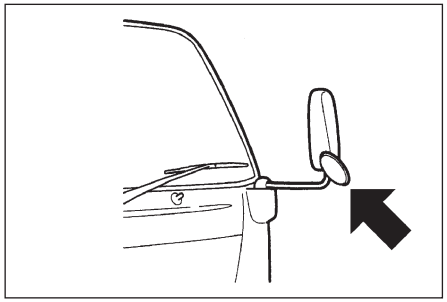

Underview mirror OPT

Adjust the underview mirror so you can just see the front end of your vehicle.

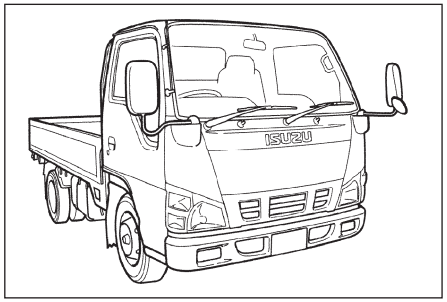

DRIVER'S CHECK LIST (REGULAR INSPECTION)

The following checks should be performed to maintain safe and dependable vehicle operation.
(Refer to the "MAINTENANCE GUIDE" for proper check-up procedures.)

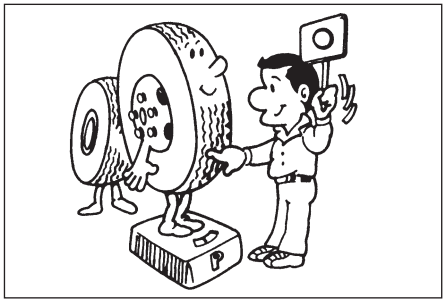

Exterior

1. Check the tire inflation pressure securely. Especially on vehicles with double tire, it is hard to find out by visual check even if one of the tires has lost its pressure. Therefore, use a tire gauge to check the tire pressure.

QKR-IE-1442_4805234_ALL.indb 3–10 2017/09/27 13:34:46

https://truckmanualshub.com/

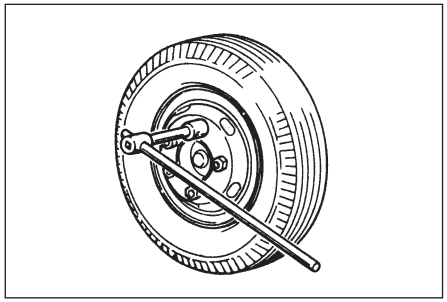

2. Using an inspection hammer etc., check the wheel bolt for breakage, wheel nut for looseness, etc.
3. Visually check the following items.
   - Check for faults, such as missing wheel nut, broken wheel bolt, etc.
   - Check the wheel bolt area for trace of rust fluid.
   - Check if the protrusions of the wheel bolts from the wheel nuts are uniform.

WARNING

If any fault such as breakage is found in the check, do not drive the vehicle. Perform the proper maintenance immediately.

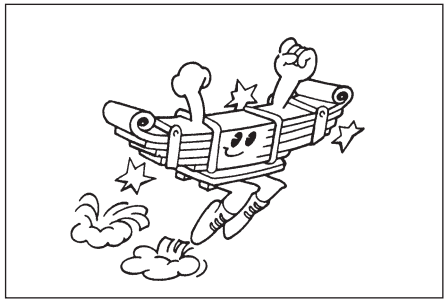

4. Check chassis springs for damage.

QKR-IE-1442_4805234_ALL.indb 3–11 2017/09/27 13:34:46

https://truckmanualshub.com/

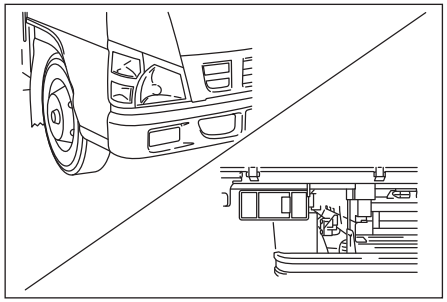

5. Check operation of lights.

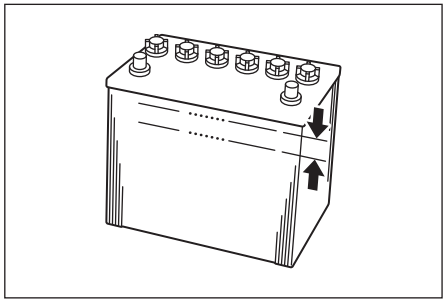

6. Check level of electrolyte in each cell of the battery.

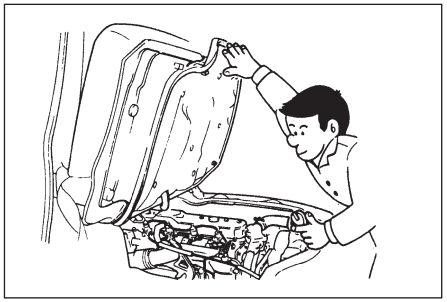

7. Check for any oil, water, fuel and brake fluid leakage.

QKR-IE-1442_4805234_ALL.indb 3–12 2017/09/27 13:34:46

https://truckmanualshub.com/

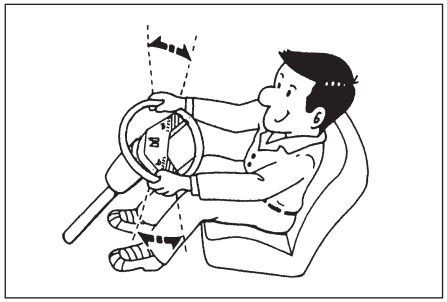

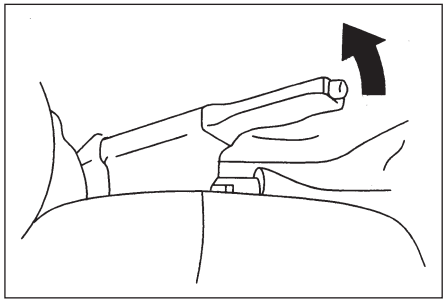

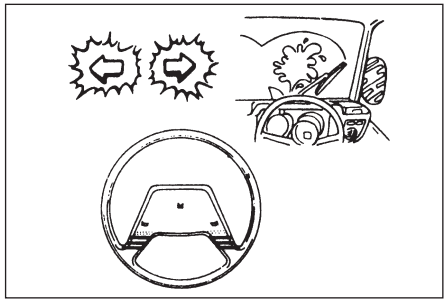

Within cab

1. Check for steering wheel excess play and looseness in its mounting.
   If the vehicle is equipped with a power steering unit, the wheel free play should be checked with the engine running.
2. Check parking brake lever travel.
3. Check operation of horns, windshield wipers and turn signals.

QKR-IE-1442_4805234_ALL.indb 3–13 2017/09/27 13:34:46

https://truckmanualshub.com/

4. Check operation of instruments and indicator lights.

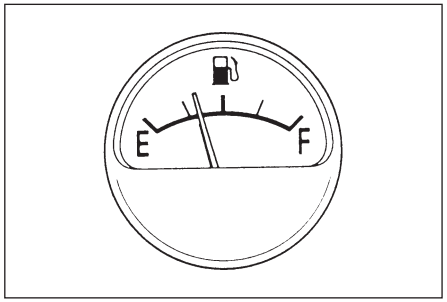

5. Check the fuel gauge for the level of the fuel in the tank against fuel gauge.

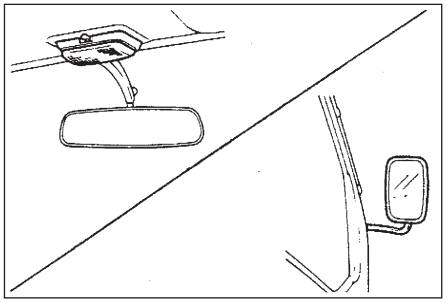

6. Check the angle of rearview mirrors.

QKR-IE-1442_4805234_ALL.indb 3–14 2017/09/27 13:34:46

https://truckmanualshub.com/

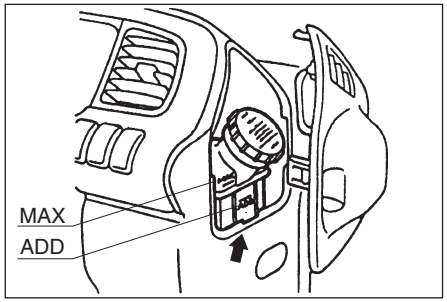

7. Check the level of clutch and brake fluid in the reservoir.

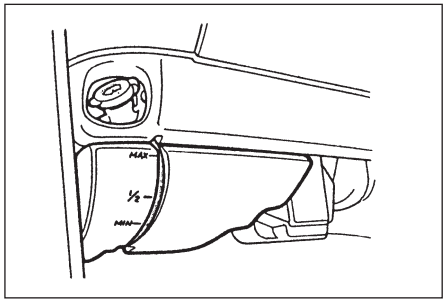

8. Check the level of the windshield washer solution in the washer tank.

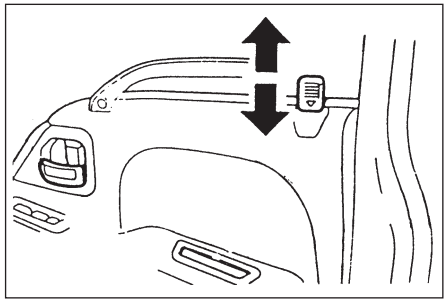

9. Check the operation of the door locking mechanism.

QKR-IE-1442_4805234_ALL.indb 3–15 2017/09/27 13:34:47

https://truckmanualshub.com/

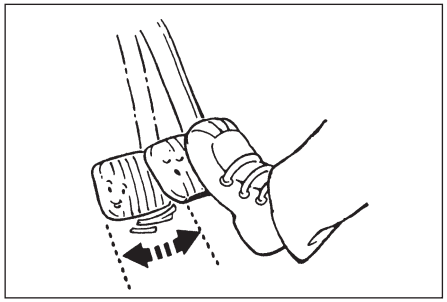

10. Check the clutch pedal play and function.

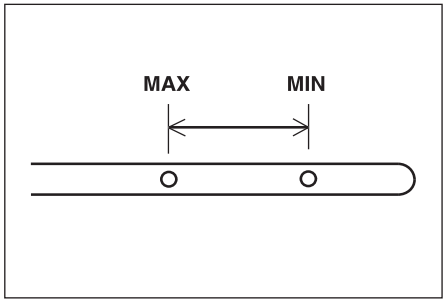

Within engine compartment

1. Check the engine oil level.

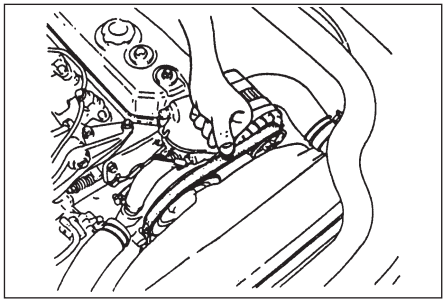

2. Check the fan belt tension.

QKR-IE-1442_4805234_ALL.indb 3–16 2017/09/27 13:34:47

https://truckmanualshub.com/

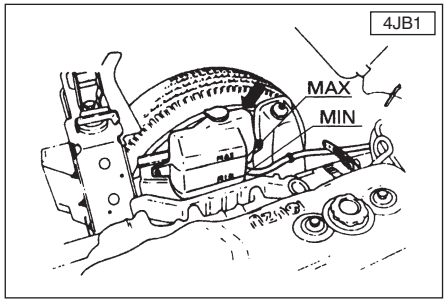

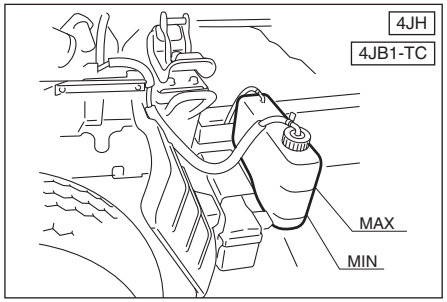

3. Check the engine coolant level and the radiator cap for looseness.

WARNING

- ***When the engine coolant is heated to a high temperature, be sure not to remove the radiator cap or reserve tank cap. If removing unnecessarily, steam spouts and may cause a burn. The reserve tank or engine coolant temperature inside of the reserve tank is also very hot, so its boiling water may cause a burn. Be sure to perform checking, adding or changing when engine coolant temperature is low.***

To open the radiator cap or reserve tank cap, put a piece of thick cloth on the cap and loosen the cap slowly.

- ***Engine coolant is toxic and must not be ingested. If the engine coolant is mistakenly ingested, immediately vomit it and seek prompt medical attention.***
- ***If the engine coolant gets in your eyes, rinse it off immediately with a large amount of water for 15 minutes or longer. Also, if still abnormality such as irritation is felt, seek medical attention.***
- ***If the engine coolant gets on your skin, rinse it off using a soap with a large amount of water. Also, if abnormality is seen, seek medical attention.***

WARNING (Continued)

QKR-IE-1442_4805234_ALL.indb 3–17 2017/09/27 13:34:47

https://truckmanualshub.com/

WARNING (Continued)

- ***Keep fire away from the engine coolant since it is easy to catch fire. Also it may catch fire if it is splashed on some parts that are in high temperature such as a manifold. Take care not to splash it.***
- ***For storage, close the cap securely and keep it in a place inaccessible to children.***

Refer to the "MAINTENANCE GUIDE" for proper check-up procedure.

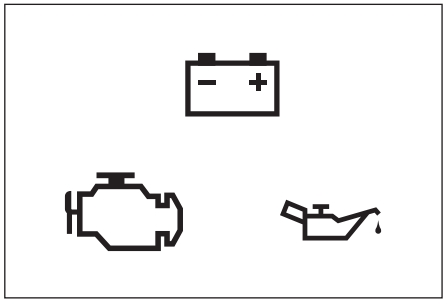

After starting engine

1. With the engine running, check that the generator indicator light, oil pressure indicator light and check engine indicator light 4JH go off and remain off.

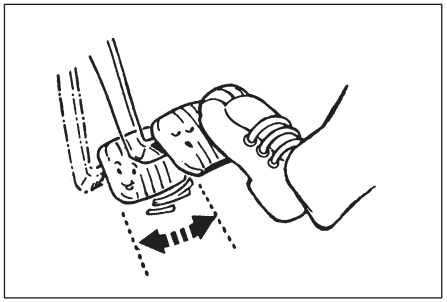

2. Check the brake pedal free play and function.

QKR-IE-1442_4805234_ALL.indb 3–18 2017/09/27 13:34:47

https://truckmanualshub.com/

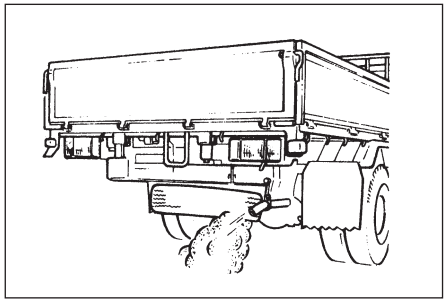

3. Check for any abnormal engine noise or color of exhaust gases.

QKR-IE-1442_4805234_ALL.indb 3–19 2017/09/27 13:34:47

https://truckmanualshub.com/

- NOTE -

QKR-IE-1442_4805234_ALL.indb 3–20 2017/09/27 13:34:47

https://truckmanualshub.com/

DRIVING

- **Preparation for starting engine... 4–1**
- **Starting engine..... 4–2**
- **Stopping engine..... 4–3**
- **Before driving off..... 4–4**
- **Operating precautions for turbocharged engine..... 4–5**
- **Parking 4–6**
- **Driving precautions 4–7**
- **Driving for economy 4–11**
- **Operation and care in winter..... 4–13**
- **Driving on ice or snow..... 4–14**
- **In case of emergency..... 4–16**

Proper care and operation will not only extend the service life of your vehicle but also improve oil and fuel economy.

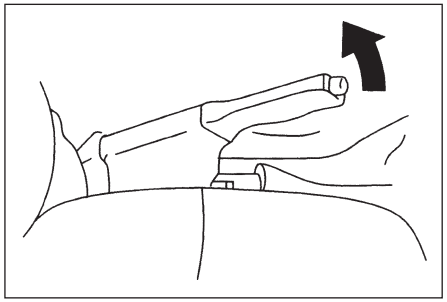

PREPARATION FOR STARTING ENGINE

1. Apply the parking brake.

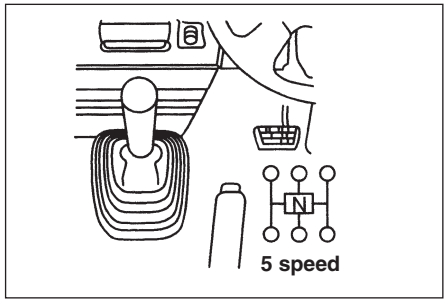

2. Place the transmission gearshift lever in the neutral position.

QKR-IE-1442_4805234_ALL.indb 4–1 2017/09/27 13:34:47

https://truckmanualshub.com/

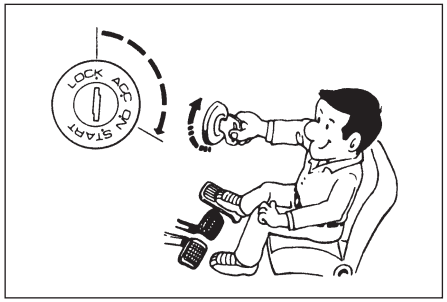

CAUTION

Do not step on the accelerator pedal before starting. When the accelerator pedal is depressed before the starter switch is turned on, the "START FUEL ENRICH SYSTEM" may not function correctly.

Accordingly, starting becomes substantially more difficult.

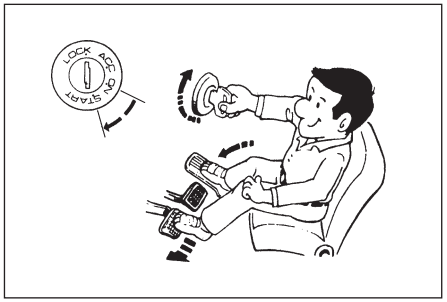

STARTING ENGINE

1. When the starter switch is turned to the "ON" position, the glow plug indicator light comes on and it goes off after about 0.5 seconds when the engine is warm.

   When the engine is cold, the indicator light goes off after about 4.0 seconds for 4JB1 engine model or after about 1.0 to 7.0 seconds for 4JH1 engine model.

2. Warm weather or hot engine:

   Turn the key switch to the "START" position (do not step on the accelerator pedal). Release the key switch as soon as the engine starts.

   Cold weather:

   When the glow plug indicator light goes off, depress the clutch and accelerator pedals to floor and hold. Turn the key switch to the "START" position. Release the key switch, clutch pedal and accelerator pedal as soon as the engine starts.

QKR-IE-1442_4805234_ALL.indb 4–2 2017/09/27 13:34:47

https://truckmanualshub.com/

CAUTION

Do not activate the starter motor continuously for more than 10 seconds, or the starter motor and the battery will be adversely affected. Fire may occur due to overheating. Repeat step 1 and 2 above after one minute break if the engine does not start.

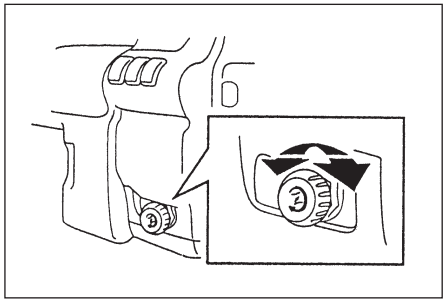

3. Turn the idling control knob as needed to achieve a smooth idle.

CAUTION

Do not leave the vehicle at this time.

4. When the engine is thoroughly warmed up, turn the idling control knob to the home position.

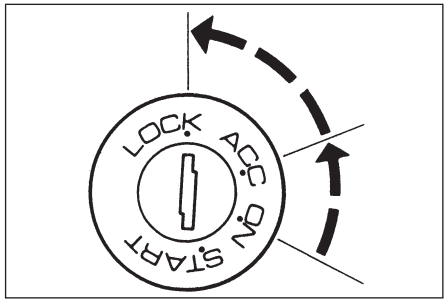

STOPPING ENGINE

1. Turn the starter switch to the "ACC" or "LOCK" position.

NOTE

If the engine gives a sign of overheating, do not stop it immediately. Keep it running at a fast idle for a while.

QKR-IE-1442_4805234_ALL.indb 4–3 2017/09/27 13:34:47

https://truckmanualshub.com/

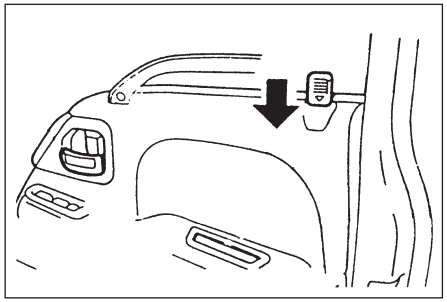

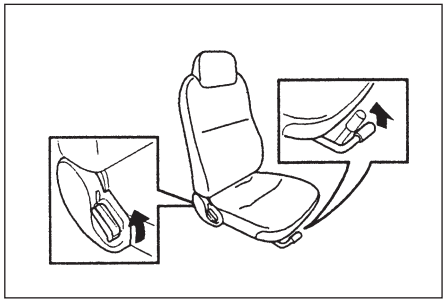

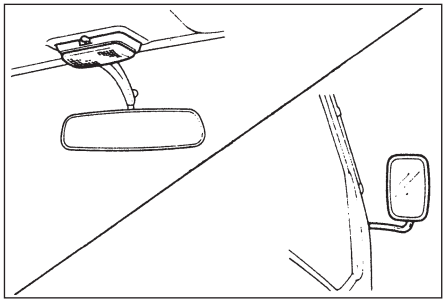

BEFORE DRIVING OFF

1. Lock all doors.
2. Adjust the seat position.
3. Adjust the inside and outside mirrors.

QKR-IE-1442_4805234_ALL.indb 4–4 2017/09/27 13:34:48

https://truckmanualshub.com/

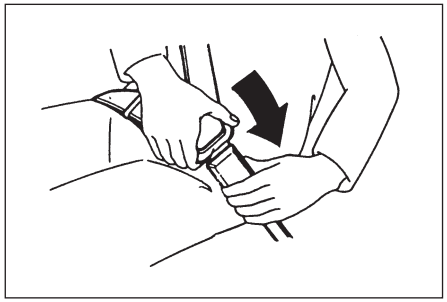

4. Fasten the seat belt.

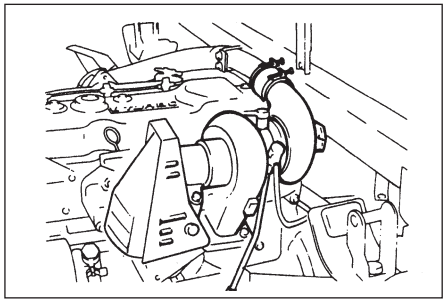

OPERATING PRECAUTIONS FOR TURBOCHARGED ENGINE

TRB

Engine starting in general

The turbocharged engine should be started in a way which ensures the bearings supporting the rotating parts of the turbocharger are sufficiently lubricated.
Do not race a cold engine.

Engine shut-off in general

CAUTION

After highway driving, at least 3 minutes of operation should be at idle until it cools down.
Engine oil pressure is available for lubrication at this time and will prolong the life of the turbocharger bearings.

QKR-IE-1442_4805234_ALL.indb 4–5 2017/09/27 13:34:48

https://truckmanualshub.com/

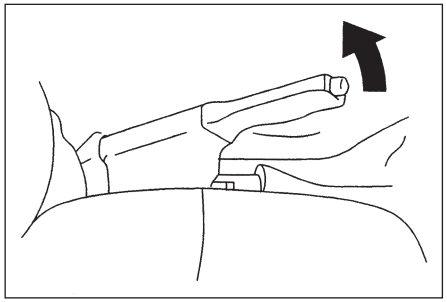

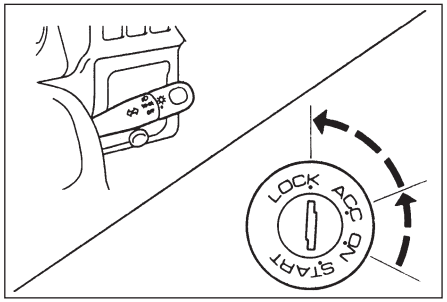

PARKING

Find a level area where parking is permitted, and park the vehicle not to obstruct traffic.
Avoid parking the vehicle on a hill. Park it on a level surface as much as possible.

When leaving your vehicle unattended:

1. Apply the parking brake firmly, and make sure the vehicle does not move.
2. When parking a vehicle on an upward slope, place the shift lever in the "1st" position.
   When parking a vehicle on a downward slope, place the shift lever in the "Reverse" position.
3. Turn the key to the "LOCK" position.
4. Remove the key.
5. Close all windows and lock all doors.
6. Check to make certain the lights are turned off.
7. Use wheel stoppers when leaving the vehicle unattended on a gradient.

CAUTION

- ***Avoid parking the loaded vehicle for a long period of time.***
- ***Wipe off dirt on each lamp lens or reflector thoroughly in order to be seen clearly that the vehicle is parked.***
- ***To be much safer, turn the steering wheel in the direction to the obstacles in order to have the least effect in case that the vehicle moves and crashes.***

WARNING

- ***Never turn the steering wheel while the vehicle is stationary and never keep the steering wheel turned fully for a long period. The temperature of oil in the power steering oil pump will rise abnormally high and cause the insufficient lubrication, damage to the hose or deterioration of the seal. This may lead to the damage to the power steering oil pump and power steering unit etc. and as a result, the steering wheel operation may get heavy suddenly.***

WARNING (Continued)

QKR-IE-1442_4805234_ALL.indb 4–6 2017/09/27 13:34:48

https://truckmanualshub.com/

WARNING (Continued)

- ***Never leave a child alone and unattended inside the vehicle. The child could activate the vehicle controls, resulting in an accident.***
- ***Do not drive through, idle or park your vehicle over combustible materials, such as grass or leaves. They could touch the hot exhaust system and ignite.***
- ***Do not leave your vehicle unattended with the engine running. If the engine should overheat, you would not be there to react to the temperature warning light or gauge. This could result in costly damage to your vehicle and its contents.***

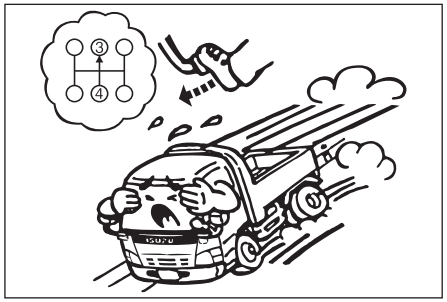

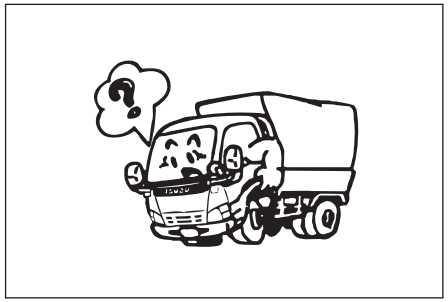

DRIVING PRECAUTIONS

1. Avoid over-running the engine. When descending a slope pay close attention to prevent engine over-running. Particularly when downshifting as the engine may over-run. Over-running the engine is running it faster than its maximum allowed revolutions (rpm/s).
2. If an abnormal noise or smell becomes noticeable while driving, stop the engine and check to locate the cause of the trouble.

QKR-IE-1442_4805234_ALL.indb 4–7 2017/09/27 13:34:48

https://truckmanualshub.com/

3. If the indicator lights or instruments give an indication of an abnormal condition while driving, stop the engine and check to locate the cause of the trouble.

4. Avoid needless hard acceleration and hard stops.

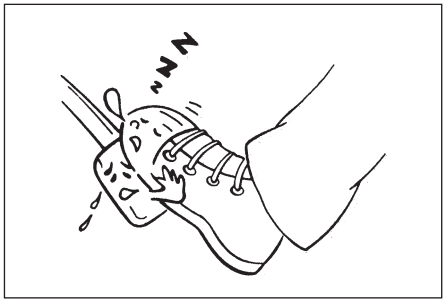

5. Do not drive with your foot resting on the clutch pedal as it produces a partly disengaged condition, causing premature wear of the clutch facing.

QKR-IE-1442_4805234_ALL.indb 4–8 2017/09/27 13:34:48

https://truckmanualshub.com/

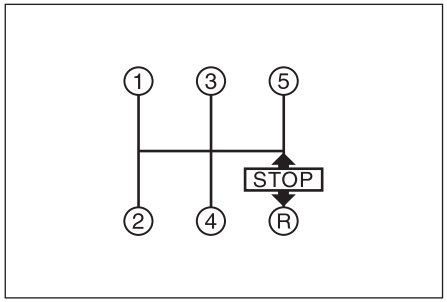

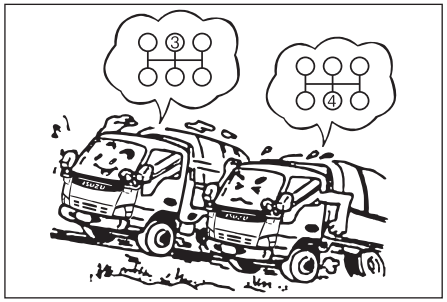

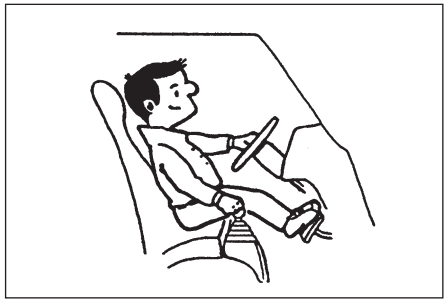

6. Allow vehicle to stop completely before shifting to reverse or shifting from reverse to any forwarding gear.

7. When climbing a slope, shift to a lower gear to relieve the engine of overload before the engine begins to lug.

8. When descending a slope, shift into a lower gear to gain a retardation effect of the engine.
   Use the exhaust brake (if equipped) when descending a slope or when it is raining.

QKR-IE-1442_4805234_ALL.indb 4–9 2017/09/27 13:34:48

https://truckmanualshub.com/

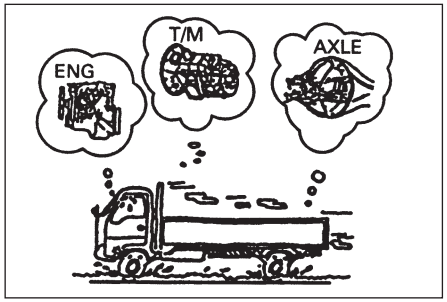

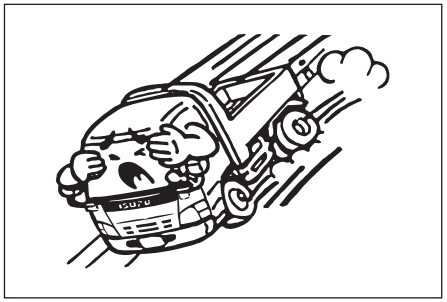

9. When driving across a shallow river or a deep puddle, extreme care must be exercised or water may be drawn into the air duct causing serious engine damage. After driving across water, check the gear oil in the rear axle and transmission case for the presence of water.
   If any water is present, drain and refill it with the specified gear oil.

10. Drive carefully after running in heavy rain or driving across a shallow river as wet brakes cause temporary reduction in brake force.

11. Never turn off the starter switch while driving the vehicle. The brake booster does not operate, and the brake efficiency is reduced. It is very dangerous to turn the switch to the "LOCK" position while driving because the steering will be locked.

QKR-IE-1442_4805234_ALL.indb 4–10 2017/09/27 13:34:48

https://truckmanualshub.com/

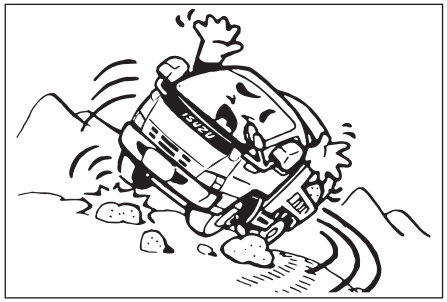

12. When making a U-turn on a sharp slope, the vehicle is in danger of turning over the moment it crosses the slope. Drive carefully selecting the road surfaces so that the tires on the higher side of the slope may not run on any convex part of the slope surface.

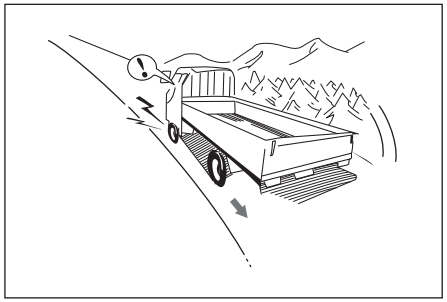

13. Going down on a steep slope

- When going down on a steep slope, avoid driving the vehicle backward as much as possible. Drive it forward slowly on the down slope.
- Compared with forward movement, the braking distance of backward movement is longer, and the steering response of that is worse.
- If you must drive the vehicle backward, drive it very carefully and gradually by moving and stopping repeatedly in order to stop it any time.
- A slip due to the road conditions (rain, snow, sand, gravel, etc.) causes longer braking distance.

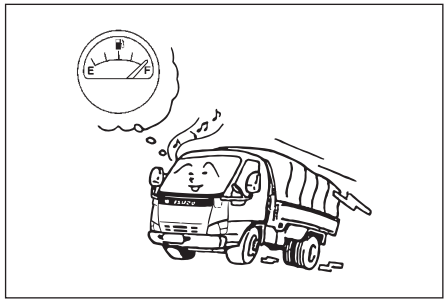

DRIVING FOR ECONOMY

1. Needless high-speed driving and slow driving in a high gear will result in excessive fuel consumption.

QKR-IE-1442_4805234_ALL.indb 4–11 2017/09/27 13:34:48

https://truckmanualshub.com/

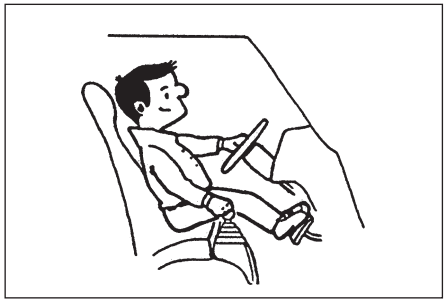

2. After acceleration, shift to a higher gear and engage the clutch smoothly.

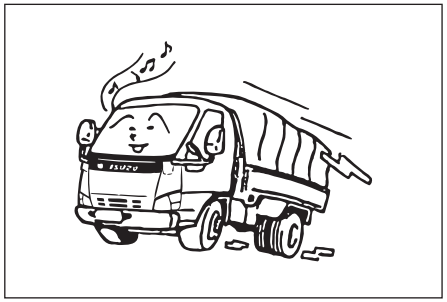

3. It is strongly advisable to keep your speed as constant as possible after shifting into top gear.

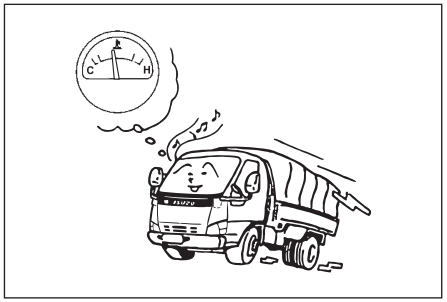

4. Always make sure the engine coolant temperature is kept within the normal range.

QKR-IE-1442_4805234_ALL.indb 4–12 2017/09/27 13:34:48

https://truckmanualshub.com/

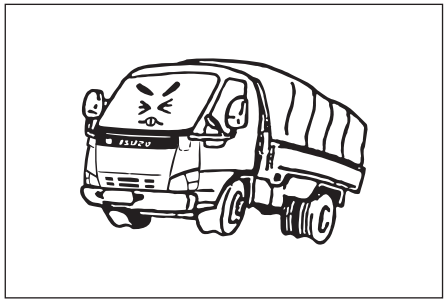

5. Under-inflated tires cause deterioration in fuel economy.

OPERATION AND CARE IN WINTER

Use of specified coolant

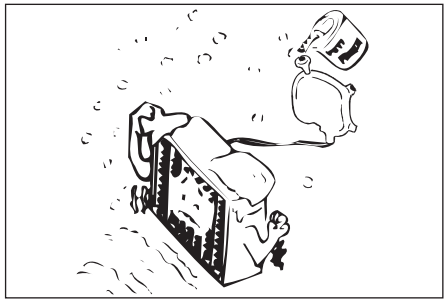

To prevent the engine damage due to freezing of the engine coolant, mix the coolant and water (distilled water or deionized water) to be an appropriate concentration.
Replace damaged rubber hoses as the engine coolant becomes liable to leak even past minor cracks when the engine coolant solution is used.
Refer to "Preparing engine coolant".
Refer to "RECOMMENDED FLUIDS, LUBRICANTS AND DIESEL FUELS".
Refer to "MAINTENANCE SCHEDULE" for service interval.

QKR-IE-1442_4805234_ALL.indb 4–13 2017/09/27 13:34:49

https://truckmanualshub.com/

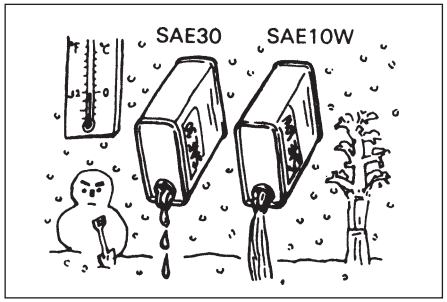

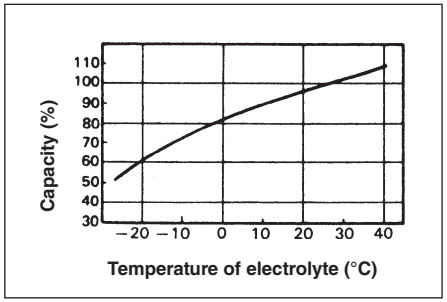

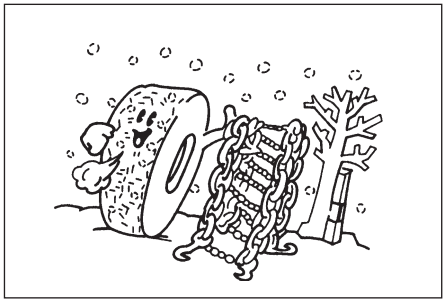

Engine oil

The engine oil tends to harden with lowering temperatures. Use engine oil with a viscosity suited to ambient temperature.

Batteries

The capacity of the battery tends to decline with lowering temperatures and specific gravity of the electrolyte lowers with the rate of discharge. Therefore, batteries should be protected against freezing.

DRIVING ON ICE OR SNOW

1. Use of tire chains or snow tires is recommended.

WARNING

Immediately after the engine has stopped running, the exhaust pipe and the muffler are hot, so be careful not to touch these parts.

QKR-IE-1442_4805234_ALL.indb 4–14 2017/09/27 13:34:49

https://truckmanualshub.com/

2. Avoid high speed, hard acceleration, hard stops and sharp steering.

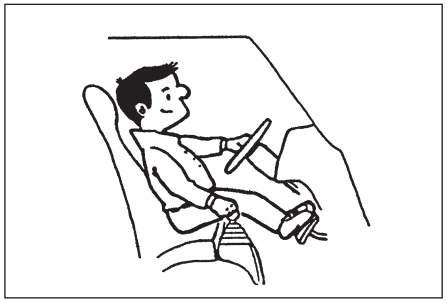

3. Use lower gears to overcome the retardation effect of the engine. Apply the foot brakes lightly.

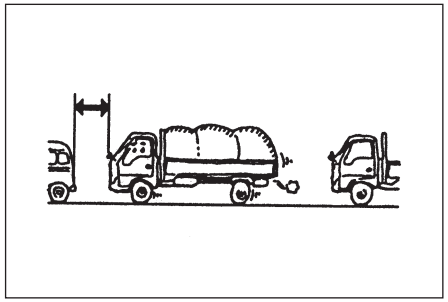

4. Drive with a sufficient distance between you and the vehicle ahead.

QKR-IE-1442_4805234_ALL.indb 4–15 2017/09/27 13:34:49

https://truckmanualshub.com/

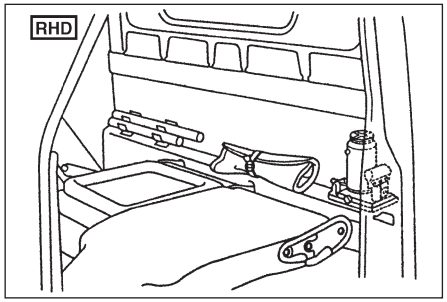

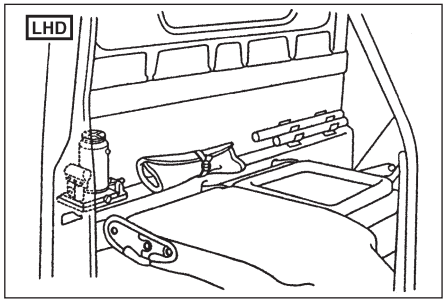

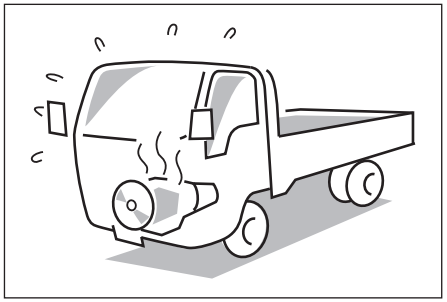

IN CASE OF EMERGENCY

Stowage of jack and tools

The tools and jack are stowed away behind the driver's seat. After use, be sure to put them back where they were so that they do not rattle during driving.

Engine overheating

If engine power drops and the needle on the engine coolant temperature gauge goes up above the upper limit of the safety zone and enters the "H" zone, the engine is overheating. Take the following corrective actions immediately.

1. Operate the hazard warning flasher and pull the vehicle immediately over to a safe place that does not impede traffic (shoulder, verge) and park it.
2. Lower the temperature of the engine for a while with the engine idling.

QKR-IE-1442_4805234_ALL.indb 4–16 2017/09/27 13:34:49

https://truckmanualshub.com/

CAUTION

Do not stop the engine immediately. Otherwise, the engine may seize.

3. When the needle of the engine coolant temperature gauge returns to the middle of the safety zone, stop the engine.

WARNING

- ***Even when the engine has been stopped, the engine coolant in the radiator remains under pressure. Immediately removing the radiator cap could cause steam or hot water to blow out, and you could be scalded as a result. The engine coolant in the reserve tank may also be hot. Immediately removing the cap could cause hot water to blow out, and possibly scald you.***
- ***Check, replenish or change the engine coolant only after the engine has sufficiently cooled down.***
- ***When removing the radiator cap and reserve tank cap, use a thick cloth to cover the cap and turn it little by little.***
- ***Coolant is toxic and must not be ingested. If the coolant is mistakenly ingested, immediately vomit it and seek prompt medical attention.***
- ***If the coolant gets in your eyes, rinse it off immediately with a large amount of water for 15 minutes or longer. Also, if still abnormality such as irritation is felt, seek medical attention.***
- ***If the coolant gets on your skin, rinse it off using a soap with a large amount of water. Also, if abnormality is seen, seek medical attention.***
- ***For storage, close the cap securely and keep it in a place inaccessible to children.***
- ***Coolant is flammable, and therefore, it must be kept away from flames and other heat sources. Coolant also could ignite if it comes in contact with a hot surface, such as the exhaust manifold. Exercise caution to prevent this from happening.***

QKR-IE-1442_4805234_ALL.indb 4–17 2017/09/27 13:34:49

https://truckmanualshub.com/

CAUTION

When the cooling fan for the radiator is not turning, turn off the engine immediately.

4. Check the engine coolant level in the reserve tank and radiator after the engine has sufficiently cooled. If the level is insufficient, add engine coolant. Refer to "Preparing engine coolant". Also, check to see if the fan belt is loose or has been damaged. Refer to "Fan belt".
5. Inspect to see if there is any dirt, etc. attached to the front surface of the radiator and intercooler. Also, inspect to see if there is anything blocking the core. If there is anything attached, clean and remove it. Refer to "Cleaning the radiator core and intercooler core".

CAUTION

- ***Adding engine coolant suddenly to the overheated engine may cause a breakdown of the engine. Add the engine coolant slowly little by little.***
- ***When tap water only has been used for engine coolant in an emergency, adjust the engine coolant concentration as soon as possible.***

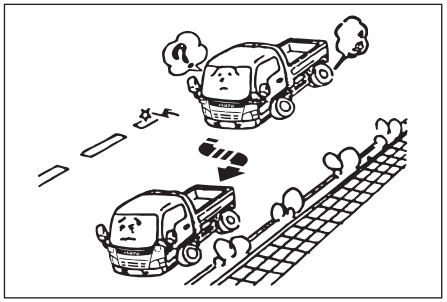

Emergency stop

1. If you must stop your vehicle on the road for some reason, pull your vehicle over to the left (right) side of the road as far as possible and try not to park on the driving lane.

QKR-IE-1442_4805234_ALL.indb 4–18 2017/09/27 13:34:49

https://truckmanualshub.com/

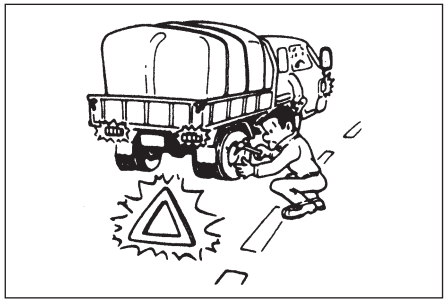

2. Make certain to apply the parking brake and turn on hazard warning lights, day or night.

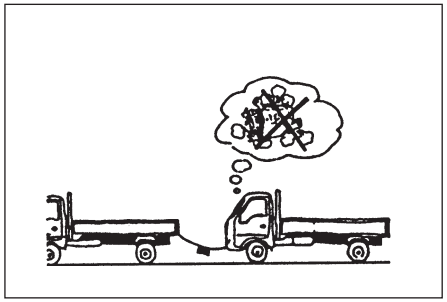

Emergency starting

WARNING

Never tow the vehicle to start it because the surge forward when the engine starts could cause a collision with the tow vehicle.

To start the vehicle when the battery is discharged, use an auxiliary battery of the same nominal voltage i.e. 12 volts, as the discharged battery.

WARNING

Exercise extreme care when handling the battery to avoid serious personal injury and damage to your vehicle which might result from a battery explosion, acid burns, electrical burns, or damaged electric components.

QKR-IE-1442_4805234_ALL.indb 4–19 2017/09/27 13:34:49

https://truckmanualshub.com/

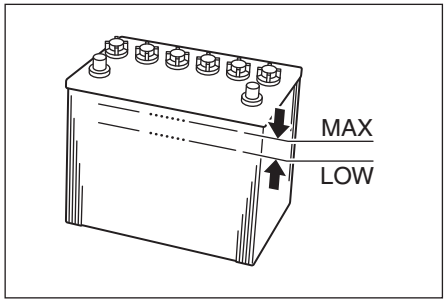

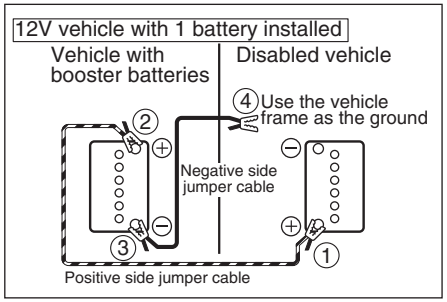

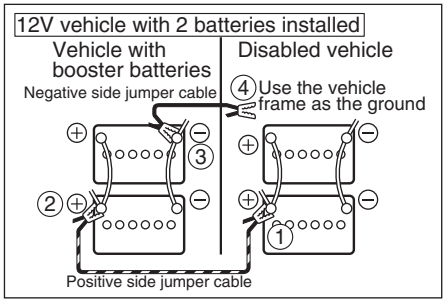

Connecting procedures:

The engine can be started with another vehicle battery using jumper cables:

1. Check the battery electrolyte level in the disabled vehicle.
2. Use a vehicle which has a battery of the same voltage (12 V).
3. Remove the battery cover and connect the jumper cables in the numbered sequence in the drawing. (The following drawing is an example of a connection between vehicles installed with the same type of battery.)
4. After connecting the cables, start the engine of the vehicle with the booster battery.
5. Slightly rev up the engine of the vehicle with the booster battery and start the engine of the disabled vehicle.
6. If the engine in the disabled vehicle starts, remove the jumper cables in the reverse sequence as they were connected.

CAUTION

Never connect the cable between the positive and negative terminals.

Do not remove the battery cables from the terminals while the engine is running. It may result in troubles in the electrical system.

QKR-IE-1442_4805234_ALL.indb 4–20 2017/09/27 13:34:49

https://truckmanualshub.com/

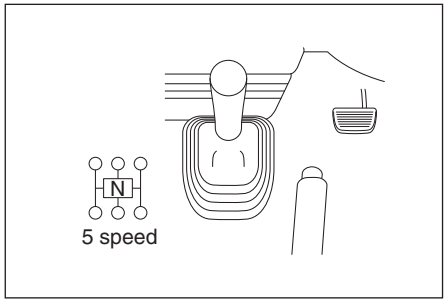

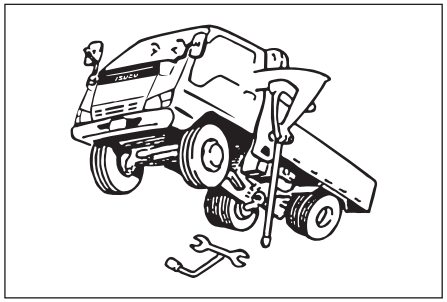

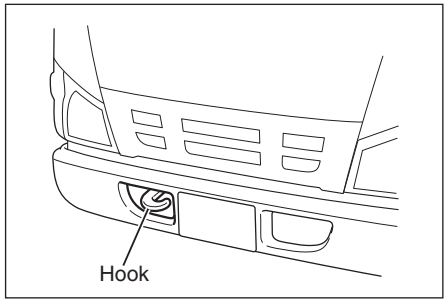

Towing

Your vehicle should be towed by an Isuzu dealership or professional towing service to prevent damage. Proper equipment must be used and local laws which apply to vehicles in tow must be followed.

1. If the transmission is in normal working condition, shift into a neutral position.
2. If the transmission is found to be out of order, disconnect the propeller shaft at the rear axle flange and fasten the end to the chassis frame.

WARNING

Always put wheel chocks when disconnecting the propeller shaft.

If you fail to do so, the vehicle may start moving and it can lead to a serious accident.

3. If the vehicle is towing or being towed, firmly attach a rope to the front or rear towing hook on the same side.
4. During towing, carefully watch the stop lights of the towing vehicle in order to prevent the rope from becoming slack. Ensure that there is no strong shock or lateral force applied to the vehicle.

QKR-IE-1442_4805234_ALL.indb 4–21 2017/09/27 13:34:50

https://truckmanualshub.com/

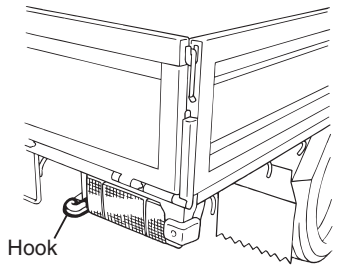

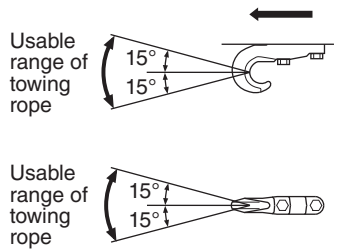

CAUTION

Then, fit the towing rope (safety chains or cables) between the hooks equipped on the tow truck and the disabled vehicle.
Drive at the speed of 40 km/h (25 mph) or less and up to a distance less than 80 km (50 miles).

WARNING

- ***Do not tow a vehicle at an angle of greater than 15°. This could exert too much stress on the vehicle and damage it.***
- ***Attach a rope to the towing hook only. Attaching a rope to other part of the vehicle could damage it.***
- ***The towing hook is for use to tow a vehicle with about the same weight as the towing vehicle on good roads.***

- ***When coming to channels or muddy areas, unload the vehicle. Do not use the towing hook to tow, but tow with a rope attached to the axle.***

QKR-IE-1442_4805234_ALL.indb 4–22 2017/09/27 13:34:50

https://truckmanualshub.com/

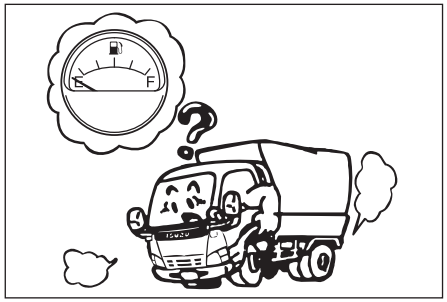

Bleeding of the fuel system

If the fuel tank has gone empty, there is a chance that air has been allowed into the fuel system. With air in the fuel system, smooth flow of fuel into the engine is interrupted. To prevent this, bleeding of the fuel system should be performed.

CAUTION

BLEEDING OF FUEL SYSTEM

If the fuel tank has been emptied, the chance is that air might have been allowed into the fuel system. With air in fuel system, smooth flow of fuel into the engine is interrupted and to prevent this bleeding of the fuel system should be performed.

(1) Operate hand pump until it becomes hard to push (about 15 pushes).

(2) Wait for 1 min.

(3) Operate hand pump until it becomes hard to push (about 10 pushes).

(4) Wait for 1 min.

(5) Operate hand pump until it becomes hard to push (about 5 pushes).

(6) When the key switch is turned to "ON" position, the glow plug indicator light comes on and goes off after about 4.0 to 7.0 seconds (with cold engine). Please notice the glow plug indicator light does not turn on when the engine already warm (engine coolant temperature above 25 °C (77°F)).

(7) Depress the clutch pedal fully and turn the key switch to "START" position to start the engine at the same time the glow plug indicator light goes off.

If the engine does not start, repeat the steps (4), (5), (6) and (7).

(8) Immediately after rev-up, put your hand off key and your foot off accelerator pedal.

(9) Allow the engine to idle for 5 min.

QKR-IE-1442_4805234_ALL.indb 4–23 2017/09/27 13:34:50

https://truckmanualshub.com/

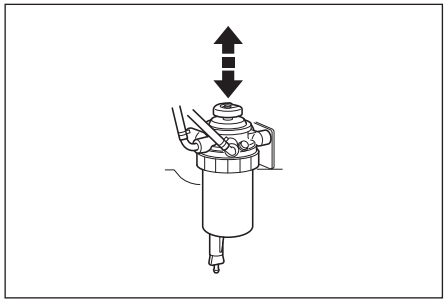

4JB

1. Operate the priming pump on the water separator to bleed the fuel system air into the injection pump.
2. When you have finished the bleeding, start the engine with the starter switch.
3. If the engine does not start within ten seconds, repeat the bleeding operation.

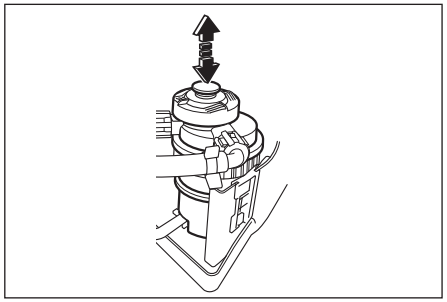

4JH

1. Confirm that sufficient fuel is held in the fuel tank.
2. Operate the priming pump until it becomes hard to push.
3. Turn the starter switch to "START" position to start the engine.

CAUTION

Do not keep the starter switch in the "START" position for more than about 10 seconds. If the engine does not start, wait more than about 30 seconds, then try starting the engine again. If you try three times and the engine does not start, perform step 2, then try starting the engine again.

4. After starting the engine, remain in idle for 1 minute. If the engine stalls when in idle, perform step 3 and then start the engine again.
5. Fully depress the accelerator pedal to increase the engine speed. When the engine speed reaches its maximum, immediately release the accelerator pedal and return to idle. Repeat this operation three times.

QKR-IE-1442_4805234_ALL.indb 4–24 2017/09/27 13:34:50

https://truckmanualshub.com/

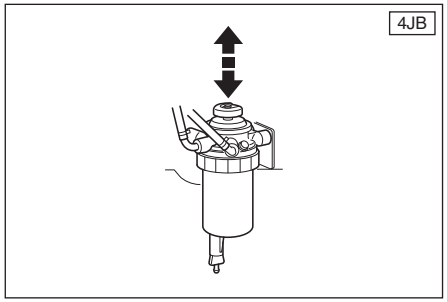

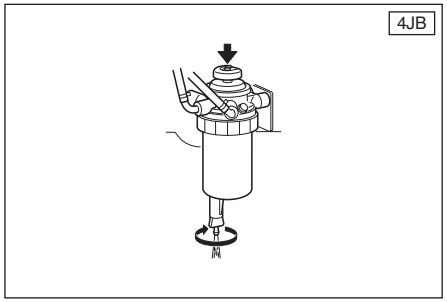

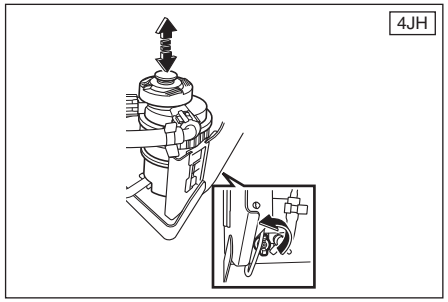

Draining of the water separator

If the fuel filter warning light lights up, drain the water accumulated in the fuel filter.
If use is continued with the warning light on, there is danger of damage to the fuel injection system. To protect the engine when replacing elements, be sure to use a pure filter.

1. Find a safe place to park the vehicle.
2. Open the engine inspection cover and place a container (approximately 0.2 liters capacity) beneath the drain plug on the separator.
3. Loosen the drain plug by turning it counterclockwise and push the priming pump down about ten times until the water is drained.
4. After draining, securely tighten the drain plug by turning it clockwise and push the priming pump up and down several times.
5. After starting the engine, check to see that there are no fuel leaks from the drain plug. Also check that the water separator indicator has turned off.

CAUTION

If the water separator requires frequent draining, have the fuel tank drained at your nearest Isuzu dealer.

QKR-IE-1442_4805234_ALL.indb 4–25 2017/09/27 13:34:50

https://truckmanualshub.com/

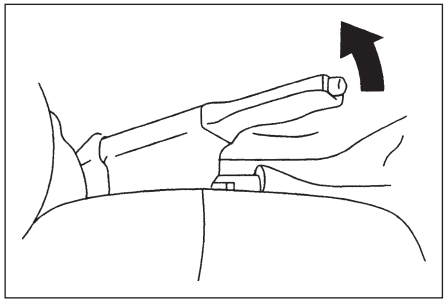

Jacking instruction and changing a flat tire

If you feel something is wrong while driving the vehicle, safely stop the vehicle immediately and check the tires.
When you cannot find a safe location nearby, slow down to a safe speed to drive the vehicle.
Driving the vehicle with a flat tire puts an excessive load on the wheel bolts. This is a major factor of the accident that a wheel comes off due to wheel bolt breakage.

WARNING

To help avoid personal injury:

- ***Follow all lifting and stowage instructions.***
- ***Use the jack only for lifting this vehicle during a wheel change.***
- ***Never get beneath the vehicle when using the jack.***
- ***Always securely stow again the spare tire (or a flat tire), and all jacking equipment.***
- ***Do not start or run the engine while the vehicle is on the jack.***
- ***Make sure the jack is positioned on a level and soiled surface.***

Preparations:

1. Park on a level surface and set the parking brake firmly.
2. Set the transmission gearshift lever in "REVERSE".
3. Activate the hazard warning.
4. Block the wheel diagonally opposite the jacking position.

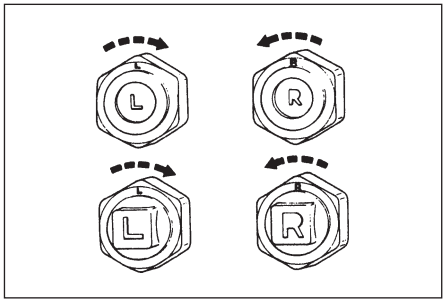

5. Slightly loosen but do not remove the wheel nuts.

NOTE

The wheel nuts on the right side wheels have right-hand threads and the wheel nuts on the left side wheels have left-hand threads.

QKR-IE-1442_4805234_ALL.indb 4–26 2017/09/27 13:34:50

https://truckmanualshub.com/

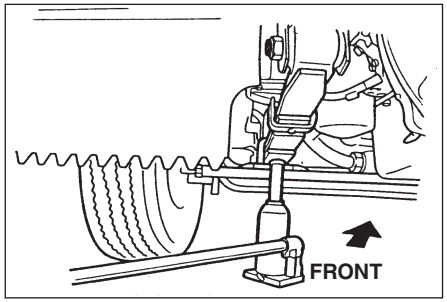

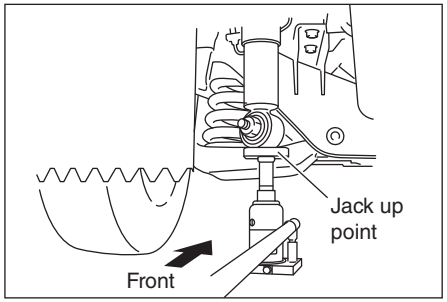

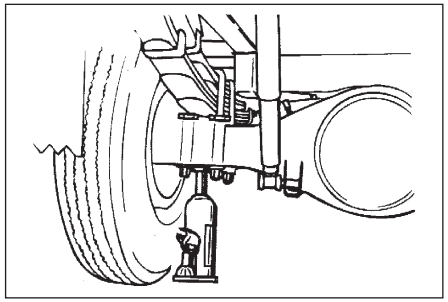

6. Place the jack at the recommended jacking point.

CAUTION

Never position the jack at points other than those specified.

Front wheel:
Leaf spring suspension models

Place the jack under the leaf spring.

Independent suspension model

Rear wheel:

WARNING

Take care not to touch the exhaust pipe or the muffler either immediately after driving the vehicle because these parts will be hot.

QKR-IE-1442_4805234_ALL.indb 4–27 2017/09/27 13:34:50

https://truckmanualshub.com/

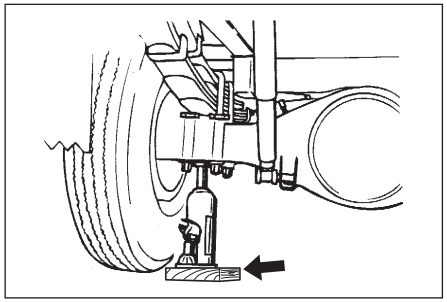

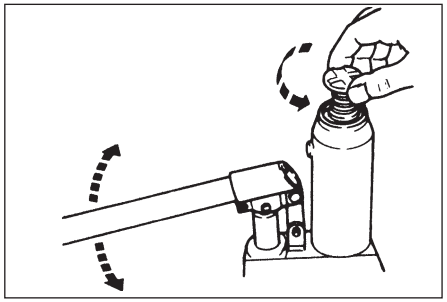

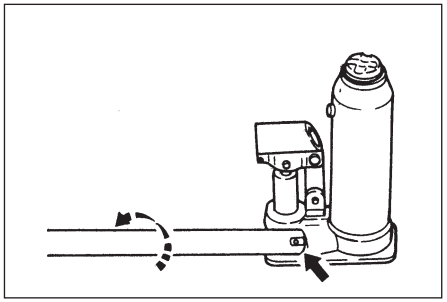

NOTE

- ***If the jack stroke is insufficient, place a wood board or equivalent under the jack.***
- ***The wood board must be thick and hard with a width larger than that of the jack base.***

Usage of the jack
To jack up:

If the jack up point is high, extend the jack head by turning it counterclockwise. Insert the jack bar as shown in the figure and move it up and down.

To lower:

Slowly turn the bleeder screw counterclockwise with the jack bar as shown in the figure.

QKR-IE-1442_4805234_ALL.indb 4–28 2017/09/27 13:34:50

https://truckmanualshub.com/

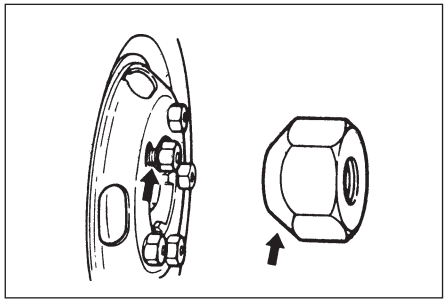

Wheel replacement

1. Jack up the vehicle so the tire just clears the surface, remove the wheel nuts and wheel, then install the spare wheel.
2. Install the wheel nuts with the cone shaped end toward the wheel, then semi-tighten each nut with the wheel wrench.
   The wheel nut must be seated on the hub.
   Lower the vehicle by turning the bleeder screw counterclockwise to the ground.

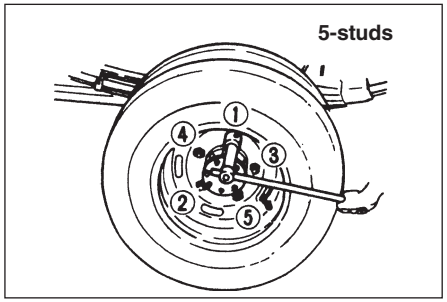

3. With the wheel wrench, tighten the wheel nuts in sequence as shown in the figure. The wheel nuts can be securely tightened at the specified torque as listed on the chart.

CAUTION

1. ***When the wheel is removed, check the wheel bolts, wheel nuts, wheel disc, etc. for damage.***
2. ***If the wheel bolt must be replaced due to breakage of it, replace all the wheel bolts of the wheel.***
3. ***If aluminum wheels are replaced with steel wheels, or vice versa, replace also the wheel bolts and wheel nuts with purpose-built ones.***
4. ***When installing the wheel, clean the flat surface on the wheel, the area on the hub that contacts the wheel, the threaded portion of the wheel bolt, the spherical surface on the wheel nut, etc. to remove rust, dust, additional paint and foreign objects, and then apply a thin coat of the ATF etc. to the threaded portion of the wheel bolts and wheel nuts, and the seating surface of the wheel nut.***
5. ***Tighten the wheel nuts in a diagonal order in two or three steps.***
6. ***Using a torque wrench, tighten the wheel nuts to the specified torque.***
7. ***If an impact wrench is used, pay attention to the tightening period, compressed air pressure, etc. to avoid over-tightening. Also, check with a torque wrench after tightening.***
8. ***After driving the vehicle for a certain distance (50 to 100 km (30 to 60 miles)), retighten the wheel nuts to the specified torque.***

QKR-IE-1442_4805234_ALL.indb 4–29 2017/09/27 13:34:50

https://truckmanualshub.com/

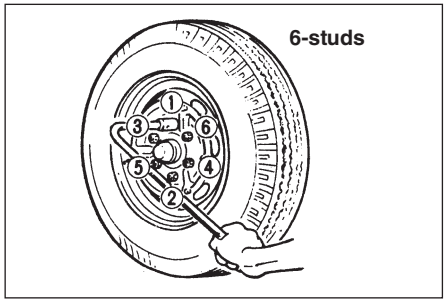

Front Wheel Nut Torque	N•m (kgf•m/lbf•ft)
Single tire rear wheel model	170 (17/123)
Dual tire rear wheel model	500 (50/362)

Rear Wheel Nut Torque	N•m (kgf•m/lbf•ft)
Single tire rear wheel model	170 (17/123)
Dual tire rear wheel model	500 (50/362)

QKR-IE-1442_4805234_ALL.indb 4–30 2017/09/27 13:34:50

https://truckmanualshub.com/

SERVICE AND MAINTENANCE

- **Maintenance schedule 5–1**
- **Maintenance guide 5–7**
- **Periodic maintenance 5–19**
- **Lubrication 5–58**
- **Recommended fluids, lubricants and diesel fuels 5–60**
- **Lubrication chart 5–64**
- **Lubrication guide 5–65**
- **Correct cargo loading 5–69**

In order to maintain safety and operating economy, it is suggested that periodic inspection and maintenance should be performed regularly according to the recommendations outlined in this section.

MAINTENANCE SCHEDULE

To ensure driving safety and maximum operating economy, periodic inspection and maintenance should be performed at your Isuzu dealer according to the maintenance schedule.
For service operations which call for disassembly or specialized instruments, contact your Isuzu dealer.

Maintenance operations

I : Inspect then clean, repair or replace as necessary
A: Adjust
R: Replace
T: Tighten to specified torque
L: Lubricate

When performing checks on the following items, regular inspection items should also be checked.

*Marks: Under severe driving conditions, more frequent maintenance is required. Refer to "Maintenance schedule under severe driving conditions".

QKR-IE-1442_4805234_ALL.indb 5–1 2017/09/27 13:34:51

https://truckmanualshub.com/

Maintenance schedule: 4JB1, 4JB1-TC, 4JH1-TC engine Model specification

(I): Inspect then clean, repair or replace as necessary (A): Adjust (R): Replace (T): Tighten to specified torque (L): Lubricate

SERVICE INTERVAL	x 1000 km	1	5	10	15	20	25	30	35	40	45	50	55	60	65	70	75	80	85	90	95	100	Use odometer reading or months, whichever occurs first
	x 100 mile	6	30	60	90	120	150	180	210	240	270	300	330	360	390	420	450	480	510	540	570	600	
4JB *Engine oil		-	R	R	R	R	R	R	R	R	R	R	R	R	R	R	R	R	R	R	R	R	or every 3 months
4JH *Engine oil		-	-	R	-	R	-	R	-	R	-	R	-	R	-	R	-	R	-	R	-	R	or every 6 months
*Engine oil filter		-	-	R	-	R	-	R	-	R	-	R	-	R	-	R	-	R	-	R	-	R	or every 6 months
Fuel filter		-	-	-	-	R	-	-	-	R	-	-	-	R	-	-	-	R	-	-	-	R	or every 12 months
*Air cleaner element		-	-	I	-	I	-	I	-	R	-	I	-	I	-	I	-	R	-	I	-	I	or every 24 months
Idling speed and acceleration		-	-	-	-	I	-	-	-	I	-	-	-	I	-	-	-	I	-	-	-	I	or every 12 months
Valve clearances		-	-	-	-	-	-	-	-	A	-	-	-	-	-	-	-	A	-	-	-	-	or every 12 months
Fuel tank cap & fuel pipes for loose connections or damage		-	-	-	-	-	-	-	-	I	-	-	-	-	-	-	-	I	-	-	-	I	or every 24 months
4JB Drive belt tension and damage		I	-	I	-	I	-	I	-	I	-	I	-	I	-	I	-	I	-	I	-	I	or every 6 months
4JH Drive belt tension and damage		Every 7,500 km (4,500 miles): I																					or every 4.5 months
Engine coolant		Every 12 months: I Every 24 months: R (when Isuzu recommended coolant is used)																					
*Damage to or looseness of the exhaust pipe, exhaust brake (if equipped), silencer, and their mountings		-	-	-	-	I	-	-	-	I	-	-	-	I	-	-	-	I	-	-	-	I	or every 12 months
4JH Exhaust pressure pipe		Every 12 months: I																					
Cooling system		-	-	-	-	I	-	-	-	I	-	-	-	I	-	-	-	I	-	-	-	I	or every 24 months
Damage to air intake ducts and hoses		-	-	-	-	-	-	I	-	-	-	-	-	I	-	-	-	-	-	I	-	-	or every 12 months
Engine operation condition		-	-	I	-	I	-	I	-	I	-	I	-	I	-	I	-	I	-	I	-	I	or every 6 months
Clutch fluid		-	-	I	-	I	-	I	-	R	-	I	-	I	-	I	-	R	-	I	-	I	or every 24 months
Clutch pedal travel and free play		-	I	I	I	I	I	I	I	I	I	I	I	I	I	I	I	I	I	I	I	I	or every 3 months

QKR-IE-1442_4805234_ALL.indb 5–2 2017/09/27 13:34:51

https://truckmanualshub.com/

Maintenance schedule: 4JB1, 4JB1-TC, 4JH1-TC engine Model specification

(I): Inspect then clean, repair or replace as necessary (A): Adjust (R): Replace (T): Tighten to specified torque (L): Lubricate

SERVICE INTERVAL x 1000 km	1	5	10	15	20	25	30	35	40	45	50	55	60	65	70	75	80	85	90	95	100	Use odometer reading or months, whichever occurs first
x 100 mile	6	30	60	90	120	150	180	210	240	270	300	330	360	390	420	450	480	510	540	570	600	
*Manual transmission oil	-	-	-	I	-	-	I	-	-	R	-	-	I	-	-	I	-	-	R	-	-	or every 24 months
Gear control mechanism for looseness	-	-	-	-	-	-	-	-	I	-	-	-	-	-	-	-	I	-	-	-	-	or every 24 months
Gear control cable	-	-	-	-	A	-	-	-	A	-	-	-	A	-	-	-	A	-	-	-	A	or every 12 months
*Propeller shaft universal joints and sliding sleeve	-	-	-	L	-	-	-	-	-	L	-	-	-	-	-	L	-	-	-	-	-	or every 12 months
Propeller shaft loose connections	-	-	-	I	-	-	I	-	-	I	-	-	I	-	-	I	-	-	I	-	-	or every 6 months
Propeller shaft splines for excessive wear	-	-	-	-	-	-	-	-	I	-	-	-	-	-	-	-	I	-	-	-	-	or every 24 months
Propeller shaft bearings and related parts for looseness	-	-	-	-	-	-	-	-	I	-	-	-	-	-	-	-	I	-	-	-	-	or every 24 months
Propeller shaft center bearing	-	-	-	-	L	-	-	-	L	-	-	-	L	-	-	-	L	-	-	-	L	or every 12 months
*Differential gear oil	-	-	-	I	-	-	I	-	-	I/R	-	-	I	-	-	I	-	-	I/R	-	-	or every 24 months
*King pin	-	-	L	-	L	-	L	-	L	-	L	-	L	-	L	-	L	-	L	-	L	or every 6 months
*Tie rod end	-	-	L	-	L	-	L	-	L	-	L	-	L	-	L	-	L	-	L	-	L	or every 6 months
Manual steering gear oil	-	-	-	-	-	-	I	-	-	-	-	-	I	-	-	-	-	-	I	-	-	or every 18 months
OPT Power steering system oil leakage	-	-	I	-	I	-	I	-	I	-	I	-	I	-	I	-	I	-	I	-	I	or every 6 months
OPT Power steering fluid	-	-	-	-	-	-	-	-	R	-	-	-	-	-	-	-	R	-	-	-	-	or every 24 months
* OPT Power steering system for looseness or damage	-	-	I	-	I	-	I	-	I	-	I	-	I	-	I	-	I	-	I	-	I	or every 6 months

SERVICE INTERVAL x 100 mile	6	30	60	90	120	150	180	210	240	270	300	330	360	390	420	450	480	510	540	570	600

QKR-IE-1442_4805234_ALL.indb 5–3 2017/09/27 13:34:51

https://truckmanualshub.com/

Maintenance schedule: 4JB1, 4JB1-TC, 4JH1-TC engine Model specification

(I): Inspect then clean, repair or replace as necessary (A): Adjust (R): Replace (T): Tighten to specified torque (L): Lubricate

SERVICE INTERVAL	x 1000 km	1	5	10	15	20	25	30	35	40	45	50	55	60	65	70	75	80	85	90	95	100	Use odometer reading or months, whichever occurs first
	x 100 mile	6	30	60	90	120	150	180	210	240	270	300	330	360	390	420	450	480	510	540	570	600	
Fitting of knuckles and front axle for looseness		-	-	I	-	I	-	I	-	I	-	I	-	I	-	I	-	I	-	I	-	I	or every 6 months
Steering mechanism for looseness or damage		-	-	-	-	-	-	-	-	I	-	-	-	-	-	-	-	I	-	-	-	-	or every 24 months
Steering wheel play		-	I	I	I	I	I	I	I	I	I	I	I	I	I	I	I	I	I	I	I	I	or every 3 months
Steering function		-	I	I	I	I	I	I	I	I	I	I	I	I	I	I	I	I	I	I	I	I	or every 3 months
Wheel alignment		-	-	-	-	-	-	-	-	I	-	-	-	-	-	-	-	I	-	-	-	-	or every 24 months
OPT Power steering hose		-	-	-	-	-	-	-	-	-	-	-	-	-	-	-	-	R	-	-	-	-	or every 48 months
Brake fluid		-	-	I	-	I	-	I	-	R	-	I	-	I	-	I	-	R	-	I	-	I	or every 24 months
Brake system for fluid leakage		-	-	I	-	I	-	I	-	I	-	I	-	I	-	I	-	I	-	I	-	I	or every 6 months
*Brake lining and drum for wear		-	-	-	-	I	-	-	-	I	-	-	-	I	-	-	-	I	-	-	-	I	or every 12 months
Brake pedal travel and free play		I	I	I	I	I	I	I	I	I	I	I	I	I	I	I	I	I	I	I	I	I	or every 3 months
Pipes and hoses for loose connections or damage		-	-	I	-	I	-	I	-	I	-	I	-	I	-	I	-	I	-	I	-	I	or every 6 months
Parking brake cables		-	-	I	-	I	-	I	-	I	-	I	-	I	-	I	-	I	-	I	-	I	or every 6 months
Parking brake function		-	-	I	-	I	-	I	-	I	-	I	-	I	-	I	-	I	-	I	-	I	or every 6 months
Parking brake lever travel		-	-	I	-	I	-	I	-	I	-	I	-	I	-	I	-	I	-	I	-	I	or every 6 months
Lining for wear		-	-	-	-	-	-	-	-	I	-	-	-	-	-	-	-	I	-	-	-	-	or every 24 months
Drum for wear or damage		-	-	-	-	-	-	-	-	I	-	-	-	-	-	-	-	I	-	-	-	-	or every 24 months
Ratchet for wear or damage		-	-	-	-	-	-	-	-	I	-	-	-	-	-	-	-	I	-	-	-	-	or every 24 months
Spring leaves for damage		-	-	I	-	I	-	I	-	I	-	I	-	I	-	I	-	I	-	I	-	I	or every 6 months

QKR-IE-1442_4805234_ALL.indb 5–4 2017/09/27 13:34:51

https://truckmanualshub.com/

Maintenance schedule: 4JB1, 4JB1-TC, 4JH1-TC engine Model specification

(I): Inspect then clean, repair or replace as necessary (A): Adjust (R): Replace (T): Tighten to specified torque (L): Lubricate

SERVICE INTERVAL x 1000 km	1	5	10	15	20	25	30	35	40	45	50	55	60	65	70	75	80	85	90	95	100	Use odometer reading or months, whichever occurs first
x 100 mile	6	30	60	90	120	150	180	210	240	270	300	330	360	390	420	450	480	510	540	570	600	
Suspension mount for looseness or damage	-	-	I	-	I	-	I	-	I	-	I	-	I	-	I	-	I	-	I	-	I	or every 6 months
Shock absorbers for oil leakage	-	-	I	-	I	-	I	-	I	-	I	-	I	-	I	-	I	-	I	-	I	or every 6 months
Shock absorbers mount for looseness	-	-	I	-	I	-	I	-	I	-	I	-	I	-	I	-	I	-	I	-	I	or every 6 months
Wheel pins and nuts	T	-	-	-	T	-	-	-	T	-	-	-	T	-	-	-	T	-	-	-	T	or every 12 months
Wheel disc for damage	-	-	-	-	I	-	-	-	I	-	-	-	I	-	-	-	I	-	-	-	I	or every 12 months
Hub bearing grease	-	-	-	-	-	-	-	-	R	-	-	-	-	-	-	-	R	-	-	-	-	or every 24 months
Tire pressure and damage	-	-	I	-	I	-	I	-	I	-	I	-	I	-	I	-	I	-	I	-	I	or every 6 months
Specific gravity of battery electrolyte	-	-	I	-	I	-	I	-	I	-	I	-	I	-	I	-	I	-	I	-	I	or every 6 months
Lights, horn, windshield, wiper and washer	-	-	I	-	I	-	I	-	I	-	I	-	I	-	I	-	I	-	I	-	I	or every 6 months
Bolts and nuts on chassis and body	I	-	-	-	-	-	-	-	I	-	-	-	-	-	-	-	I	-	-	-	-	or every 24 months

QKR-IE-1442_4805234_ALL.indb 5–5 2017/09/27 13:34:51

https://truckmanualshub.com/

Maintenance schedule under severe driving conditions

Severe driving conditions
A: Repeated short trips
B: Driving on rough roads
C: Driving on dusty roads
D: Driving in extremely cold weather and/or on salted roads

Item	Interval	Condition				
		A	B	C	D	A+D
4JB Engine oil	Change every 2,500 km (1,500 miles)			•		•
4JH Engine oil	Change every 5,000 km (3,000 miles)			•		•
Engine oil filter	Replace every 5,000 km (3,000 miles)			•		•
Damage to or looseness of the exhaust pipe, exhaust brake (if equipped), silencer, and their mountings	Inspect every 10,000 km (6,000 miles)	•	•		•	
Air cleaner element	Inspect every 5,000 km (3,000 miles) Replace every 20,000 km (12,000 miles)			•		
Power steering system for looseness or damage	Inspect every 5,000 km (3,000 miles)		•			
Propeller shaft universal joints and sliding sleeve grease	Lubricate every 10,000 km (6,000 miles)		•			
Manual transmission and differential gear oil	Change every 20,000 km (12,000 miles)		•	•		
Brake lining and drum for wear	Inspect every 10,000 km (6,000 miles)	•	•	•		
Kingpins	Lubricate every 5,000 km (3,000 miles)			•	•	
Tie rod end	Lubricate every 5,000 km (3,000 miles)			•	•	

QKR-IE-1442_4805234_ALL.indb 5–6 2017/09/27 13:34:51

https://truckmanualshub.com/

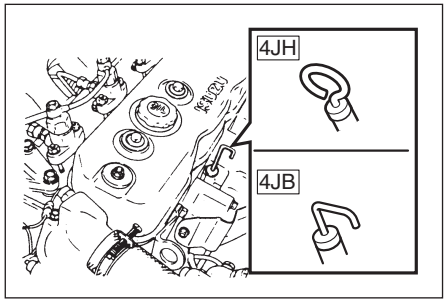

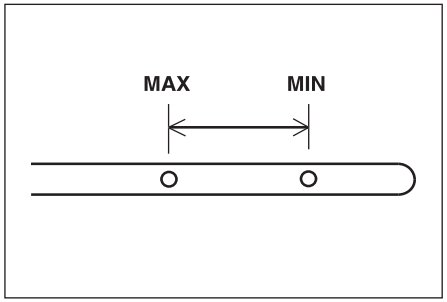

MAINTENANCE GUIDE

REGULAR INSPECTION

Engine oil level

Pull out the oil level gauge rod (oil dipstick), wipe clean it and reinsert. Again pull it out and check that oil level is within MAX and MIN level marks. Also check the oil on the gauge rod for contamination.

NOTE

Engine oil level should be checked with the vehicle parked on level ground (before the operation of engine).

NOTE

If the engine in running, stop the engine and allow 5 minutes for the oil to settle down before checking the oil level.

QKR-IE-1442_4805234_ALL.indb 5–7 2017/09/27 13:34:51

https://truckmanualshub.com/

Fan belt

Press the center of the span between pulleys (see the figure) of the belt with a force of 10.0 kgf (22 lb/98 N) and check the amount of deflection. The amount of deflection must fall within the standard value range indicated below. Otherwise, adjust the tension.
When inspecting by vibration frequency, place and hold the sensor mike surface parallel to the belt 10 mm (0.39 in) from the center of the span between pulleys (indicated by the arrow) and tap the belt with a handle of screwdriver etc. to make the belt vibrated and measure the value. Measure the value 2 or 3 times and calculate the average value.
The average value must be within the standard value range indicated below. Otherwise, adjust the tension.
Also check the belt for cracks or other damage. If there are cracks or damage or if the inspected value is not within the standard value range, replace the belt. Have adjustment and replacement of the fan belt performed at an Isuzu Dealer.

Belt types		Amount of deflection mm (in)	Vibration frequency Hz
Power steering pump drive belt	New belt	8.0 - 12.0 (0.31 - 0.47)	135 - 165
	When reused	11.0 - 13.0 (0.43 - 0.51)	117 - 135
Generator drive belt	New belt	7.0 - 9.0 (0.28 - 0.35)	133 - 157
	When reused	9.0 - 11.0 (0.35 - 0.43)	112 - 126

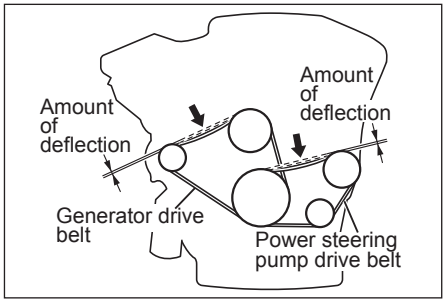

CAUTION

Insufficient tension will result in battery discharge or engine overheating, whereas excessive tension could cause damage to the generator or V belt.

Check the fan belt without fail. If the fan belt breaks, the brake booster will not operate.

QKR-IE-1442_4805234_ALL.indb 5–8 2017/09/27 13:34:51

https://truckmanualshub.com/

Engine cooling system

The engine cooling system is designed to maintain the engine at the proper operating temperature. The cooling system was filled at the factory with a quality engine coolant. The engine cooling system is designed to use engine coolant rather than water (distilled water or deionized water) . The engine coolant solution should be used year round. It has many advantages such as:

- Protecting against rust and corrosion in the cooling system
- Maintaining the proper engine temperature for efficient operation and emission control.
- Allowing proper operation of the engine coolant temperature gauge.

See the "MAINTENANCE SCHEDULE" in this section to find out when the engine coolant must be replaced.

WARNING

- ***Check, replenish or change the engine coolant only after the engine has sufficiently cooled down.***
- ***Do not loosen or remove the cap of the radiator or reserve tank cap when the engine coolant is still hot. Hot vapor or boiling water may burst out and cause a burn. Cover the cap with a cloth, etc. and remove it gradually after the engine is fully cooled down and the temperature of the engine coolant becomes low.***
- ***When removing the radiator cap, use a thick cloth to cover the cap and turn it slowly.***
- ***Engine coolant is toxic and must not be ingested. If the engine coolant is mistakenly ingested, immediately vomit it and seek prompt medical attention.***
- ***If the engine coolant gets in your eyes, rinse it off immediately with a large amount of water for 15 minutes or longer. Also, if still abnormality such as irritation is felt, seek medical attention.***
- ***If the engine coolant gets on your skin, rinse it off using a soap with a large amount of water. Also, if abnormality is seen, seek medical attention.***
- ***Engine coolant is flammable, and therefore, it must be kept away from flames and other heat sources. Engine coolant also could ignite if it comes in contact with a hot surface, such as the exhaust manifold. Exercise caution to prevent this from happening.***
- ***For storage, close the cap securely and keep it in a place inaccessible to children.***

QKR-IE-1442_4805234_ALL.indb 5-9 2017/09/27 13:34:52

https://truckmanualshub.com/

CAUTION

Replace the engine coolant periodically.

If the engine coolant is not replaced periodically, rust is generated due to degradation of the engine coolant, which may cause a failure such as water leakage or clogging of the radiator or heater core.

NOTE

Engine coolant is fluid which is made by mixing coolant and water (distilled water or deionized water) at an appropriate concentration.

Preparing engine coolant

To prevent the engine damage due to freezing of the engine coolant and to protect the cooling system from corrosion, mix the Isuzu recommended coolant and water (distilled water or deionized water) to be at 50% concentration.
For other than Isuzu genuine coolant (Arteco/BASF/Total, etc.), it is recommended to use directly "50/50 Pre-diluted" product which is already diluted to 50% concentration.
Refer to "RECOMMENDED FLUIDS, LUBRICANTS AND DIESEL FUELS" in this section for Isuzu recommended coolant.

CAUTION

- ***Isuzu does not guarantee the use of the engine or vehicle at the outside temperature of -30°C (-22°F) or below.***
- ***However, if the engine or vehicle is used at the outside temperature of -30°C (-22°F) or below, the coolant concentration of 55% is recommended.***

QKR-IE-1442_4805234_ALL.indb 5–10 2017/09/27 13:34:52

https://truckmanualshub.com/

The quantity of engine coolant is indicated below for your use as a guideline when changing the engine coolant. After changing the engine coolant, check that the engine coolant is up to the specified level.

Engine model	Engine coolant quantity [Reference value]: liters (US/Imp gal.)
4JB1, 4JB1-TC	10.1 (2.67/2.22)
4JH1-TC	11.3 (2.99/2.49)

WARNING

- ***Coolant is toxic and must not be ingested. If the coolant is mistakenly ingested, immediately vomit it and seek prompt medical attention.***
- ***If the coolant gets in your eyes, rinse it off immediately with a large amount of water for 15 minutes or longer. Also, if still abnormality such as irritation is felt, seek medical attention.***
- ***If the coolant gets on your skin, rinse it off using a soap with a large amount of water. Also, if abnormality is seen, seek medical attention.***
- ***Coolant is flammable, and therefore, it must be kept away from flames and other heat sources. Coolant also could ignite if it comes in contact with a hot surface, such as the exhaust manifold. Exercise caution to prevent this from happening.***
- ***For storage, close the cap securely and keep it in a place inaccessible to children.***

CAUTION

- ***Use only an Isuzu recommended coolant.***
- ***Using any coolant other than that Isuzu recommended could cause damage to the engine, radiator or heater core. In particular, use of coolants containing borate salts or silicates may result in engine or radiator corrosion, causing engine coolant leaks and other problems.***
- ***To dilute the coolant, use distilled water or deionized water.***
- ***Do not use the coolant at any coolant concentration other than that specified. If the coolant concentration is 60% or higher, overheating is likely to occur, while if it is 30% or lower, anti-corrosion function is not provided sufficiently.***
- ***Using coolant at any coolant concentration other than that specified may reduce anti-freezing performance, and engine coolant may freeze.***

CAUTION (Continued)

QKR-IE-1442_4805234_ALL.indb 5–11 2017/09/27 13:34:52

https://truckmanualshub.com/

CAUTION (Continued)

- ***If the engine coolant decreases rapidly, go immediately to the nearest Isuzu dealer for a check or repair.***

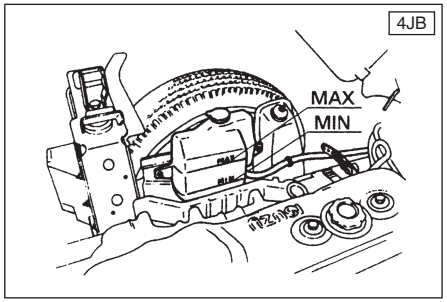

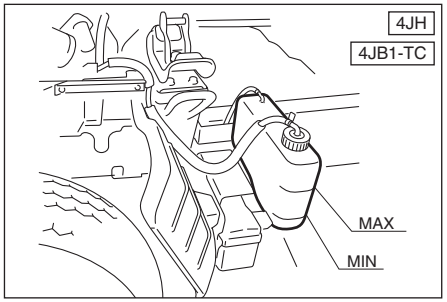

Engine coolant level

Overheating may result in engine damage or breakdown. To avoid this, be sure to check the amount of engine coolant periodically.
Check the level of engine coolant when the engine is cold and replenish as necessary at the radiator reserve tank.

Checking and adding

The engine coolant level inside the reserve tank should be between the "MIN" and "MAX" level line. If the level is low, open the reserve tank cap and fill to "MAX" level line with the engine coolant.

Tighten the cap securely after filling. Also check the radiator cap part, radiator or hose for engine coolant leakage, and confirm that no stain due to engine coolant leakage remains in the ground where the vehicle is parked. Contact Isuzu dealer in case leakage is found.

QKR-IE-1442_4805234_ALL.indb 5–12 2017/09/27 13:34:52

https://truckmanualshub.com/

WARNING

- *Even when the engine has been stopped, the engine coolant in the radiator remains under pressure. Immediately removing the radiator cap could cause steam or hot water to blow out, and you could be scalded as a result. The engine coolant in the reserve tank may also be hot. Immediately removing the cap could cause hot water to blow out, and possibly scald you.*
- *Check, replenish or change the engine coolant only after the engine has sufficiently cooled down.*
- *When removing the radiator cap and reserve tank cap, use a thick cloth to cover the cap and turn it little by little.*
- *Keep fire away from the engine coolant since it is easy to catch fire. Also it may catch fire if it is splashed on some parts that are in high temperature such as a manifold. Take care not to splash it.*
- *Engine coolant is toxic and must not be ingested. If the engine coolant is mistakenly ingested, immediately vomit it and seek prompt medical attention.*
- *If the engine coolant gets in your eyes, rinse it off immediately with a large amount of water for 15 minutes or longer. Also, if still abnormality such as irritation is felt, seek medical attention.*
- *If the engine coolant gets on your skin, rinse it off using a soap with a large amount of water. Also, if abnormality is seen, seek medical attention.*
- *For storage, close the cap securely and keep it in a place inaccessible to children.*

CAUTION

- *Do not overfill the reserve tank.*
- *The radiator cap must not be removed unless absolutely necessary.*
- *Supplement inhibitors or additives claiming to provide increases in cooling capability that have not been specifically approved by Isuzu are not recommended in the cooling system.*

QKR-IE-1442_4805234_ALL.indb 5–13 2017/09/27 13:34:52

https://truckmanualshub.com/

Operation and care in winter

Protection of engine against over-cooling

Over-cooling of the engine not only accelerates wear of the vital engine parts but also deteriorates fuel economy.

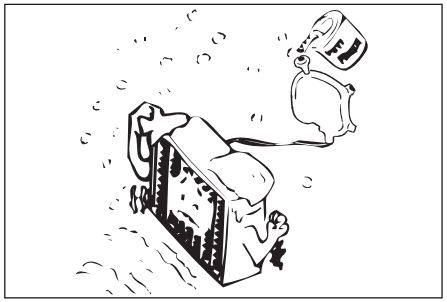

Use of specified coolant

To prevent the engine damage due to freezing of the engine coolant, mix the coolant and water (distilled water or deionized water) to be an appropriate concentration.
Replace damaged rubber hoses as the engine coolant becomes liable to leak even past minor cracks when the engine coolant solution is used.
Refer to "Preparing engine coolant".
Refer to "RECOMMENDED FLUIDS, LUBRICANTS AND DIESEL FUELS".
Refer to "MAINTENANCE SCHEDULE" for service interval.

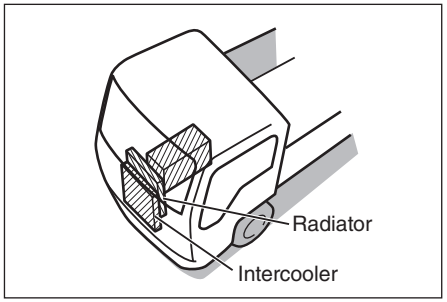

Cleaning the radiator core and intercooler core

Cooling efficiency is compromised when there is dirt or dust plugging air passages in the radiator core and intercooler core. This can also cause corrosion of these cores. Wash the radiator core with tap water every 2 years.

QKR-IE-1442_4805234_ALL.indb 5–14 2017/09/27 13:34:52

https://truckmanualshub.com/

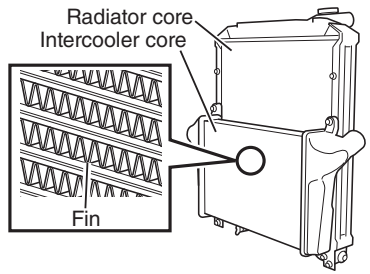

WARNING

- ***Make sure to turn the engine off and remove the key from the starter switch before cleaning cores.***
- ***The engine, exhaust pipe and radiator will be hot immediately after the vehicle is driven. Be careful around these parts to prevent burns. Clean the engine when it is cold.***

CAUTION

- ***Do not clean the radiator, intercooler and their surrounding areas using water that is supplied under high pressure. Doing so may cause damage.***
- ***When cleaning the radiator core and intercooler core, do not crush or damage the fins.***
- ***The fins are very fragile so be careful not to bend them out of shape. If they become deformed, their cooling efficiency will be impaired.***
- ***Before cleaning, take steps to ensure that no water will splash onto the surrounding electrical components and wires.***
- ***If stubborn dirt still remains even after the radiator core and intercooler core have been cleaned, have the vehicle inspected and serviced at your Isuzu dealer.***

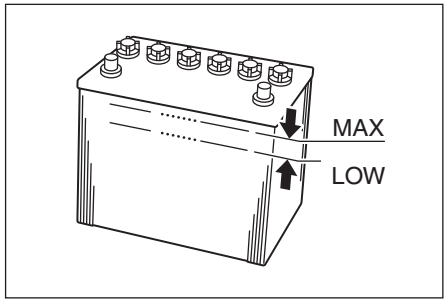

Level of battery electrolyte

The levels of battery electrolyte are normal if they are flush with the ellipse hole in the filler port. If the level is too low, replenish with distilled water. The battery is located in the battery compartment in the center portion of the left side of the chassis frame.

WARNING

The fluid in the battery is sulfuric acid. It is dangerous. Do not spill it on your skin or clothing. Be especially careful not to get it in your eyes. If battery acid should get into your eyes, flush them with clean fresh water and immediately seek proper medical treatment.

QKR-IE-1442_4805234_ALL.indb 5–15 2017/09/27 13:34:52

https://truckmanualshub.com/

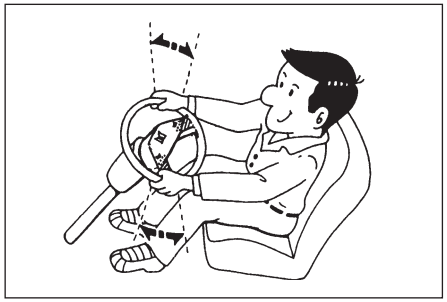

Steering wheel

Check the amount of the steering wheel play by turning the wheel in both directions until the tires begin to move. The standard free play is within the range of

manual steering: 10 to 30 mm (0.39 to 1.18 in)
power steering: 10 to 50 mm (0.39 to 1.97 in)
OPT V

at the periphery of the steering wheel when checked with the front wheels properly in the straight-ahead position.

NOTE

If the vehicle is equipped with a power steering unit, the wheel free play should be checked with the engine running.

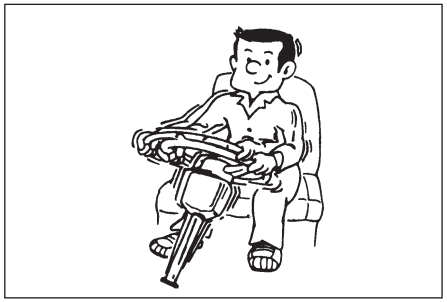

Also check the steering wheel for play and looseness in its mount by moving it back and forth and sideways.

While driving check for hard steering, steering shimmy and a tendency of the steering to pull to one side.

CAUTION

If the steering parts have excess play or looseness or if any abnormal condition is noted, have the steering system checked at your Isuzu dealer immediately.

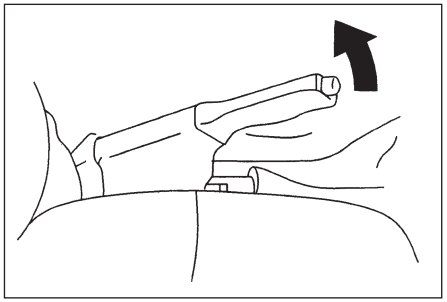

Parking brake lever travel

Normal parking brake travels: 6 to 8 notches

When pulled with a force of **15 kg** (**33 lbs, 147 N**).

When parking brake lever travel is in excess of 16 notches, the braking is insufficient and brake adjustment should be performed.

QKR-IE-1442_4805234_ALL.indb 5–16 2017/09/27 13:34:52

https://truckmanualshub.com/

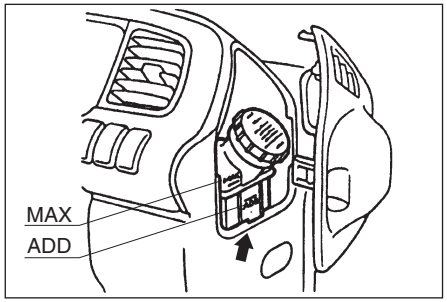

Brake and clutch fluid level

For hydraulic brake models, clutch fluid is also used as brake fluid and is contained in the same tank.
Check that the brake and clutch fluid level is between the "MAX" and "ADD" mark on the reservoir.
The level should be between the MAX and ADD level line. If the level is lower than the ADD level line, fill the MAX level line with the recommended hydraulic brake fluid.
If the brake fluid reservoir is equipped with a level indicator, periodic fluid level checking is not necessary.

CAUTION

- ***Before refilling the tank, clean the area around the cap and fill clutch fluid from a clean container. Foreign objects getting in the tank will lead to a clutch system failure.***
- ***When adding fluid to the tank, take care to prevent dirt and water from entering it. Any dirt or water in the system could cause the vehicle to lose brake and clutch functions.***
- ***Inspect and change brake (clutch) fluid according to the Maintenance Schedule.***
- ***Use non-petroleum base brake (clutch) fluid when adding brake (clutch) fluid.***
- ***Be careful not to spill brake (clutch) fluid onto painted surfaces or to let it come in contact with skin. If fluid is spilled onto a painted surface or come in contact with skin, wash away the fluid with water and immediately wipe the area clean.***
- ***Brake (clutch) fluid readily absorbs moisture. Therefore, it is necessary to close the container tightly for storage.***
- ***Never mix the specified brake (clutch) fluid with fluids of any other brand.***
- ***If the brake (clutch) fluid level decreases rapidly, there may be a problem in the brake system or clutch system, or brake pads or shoe linings may have worn out. Have your vehicle inspected by the nearest Isuzu Dealer immediately.***

QKR-IE-1442_4805234_ALL.indb 5–17 2017/09/27 13:34:53

https://truckmanualshub.com/

WARNING

The brake indicator light does not indicate the parking brake function or non-function. When applying the parking brake, pull the parking brake lever as far up as possible.

Do not continue to operate the vehicle when the brake indicator light is on. There may be serious trouble in the brake system. Vehicle operation under this condition is extremely dangerous and can lead to an accident.

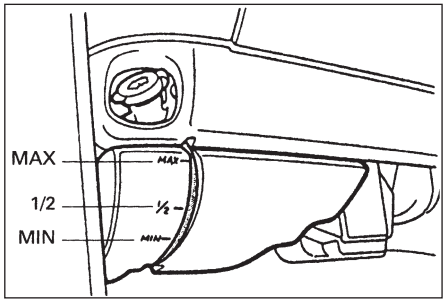

Windshield washer solution level

Check that the washer tank is filled sufficiently with solution. Also check the operating condition of the windshield washer.

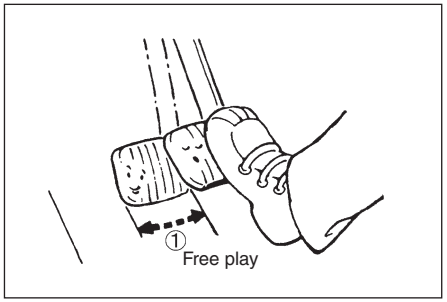

Clutch pedal free play

Free play:

15 to 25 mm (0.59 to 0.98 in)

QKR-IE-1442_4805234_ALL.indb 5–18 2017/09/27 13:34:53

https://truckmanualshub.com/

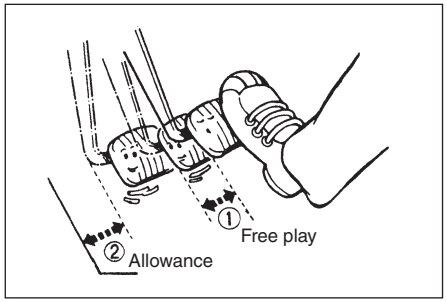

Brake pedal free play and allowance

① Free play: **4 to 7 mm (0.16 to 0.28 in)**

NOTE

Stop the engine and depress the brake pedal strongly about 10 times to set the vacuum to 0 before measuring.

② Allowance: **60 mm (2.36 in)**

Note:

When depressed with force of 50 kg (110 lbs).

NOTE

Let the engine run for at least 1 minute before taking measurement with the engine running.

PERIODIC MAINTENANCE

Air cleaner

Use of clogged air cleaner element not only causes a deterioration in the engine output but also increased fuel consumption and dark exhaust smoke. The air cleaner element should be serviced in the following manner.

NOTE

It is strongly advisable to use Isuzu genuine air cleaner elements for replacement.

QKR-IE-1442_4805234_ALL.indb 5–19 2017/09/27 13:34:53

https://truckmanualshub.com/

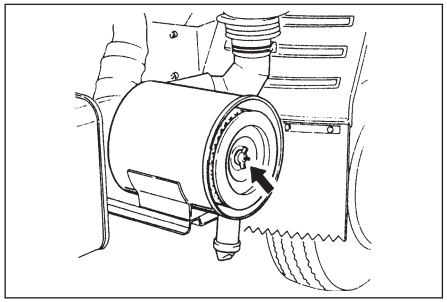

Element removal (Type 1)

1. Loosen the wing nut and remove the outside cover.
2. Remove the wing nut retaining the element and take out the element.

CAUTION

Handle the element carefully so as not to damage it.

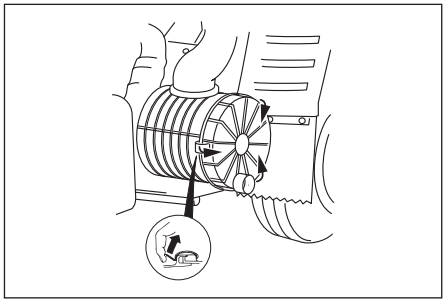

Element removal (Type 2)

1. Unhook the three hooks and remove the cover.
2. Pull out the element.

CAUTION

Handle the element carefully so as not to damage it.

QKR-IE-1442_4805234_ALL.indb 5–20 2017/09/27 13:34:53

https://truckmanualshub.com/

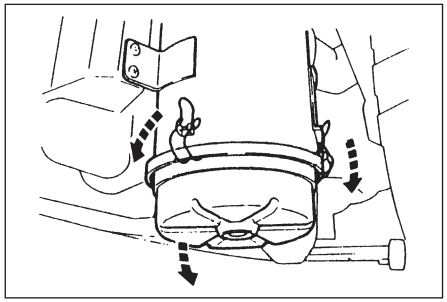

Element removal (Type 3)

1. Loosen the hooks and remove the dust-pan.

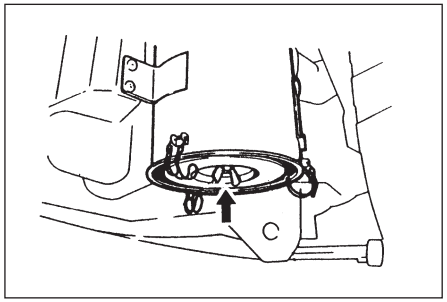

2. Remove the wing nut retaining the element and take out the element.

CAUTION

Handle the element carefully so as not to damage it.

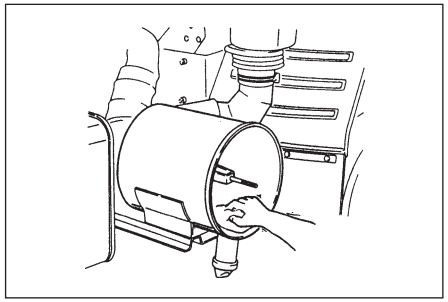

Cleaning of air cleaner body and cover

1. Wipe the inside of the air cleaner body, outside cover and the gasket fitting surface to free it from dust.

QKR-IE-1442_4805234_ALL.indb 5–21 2017/09/27 13:34:53

https://truckmanualshub.com/

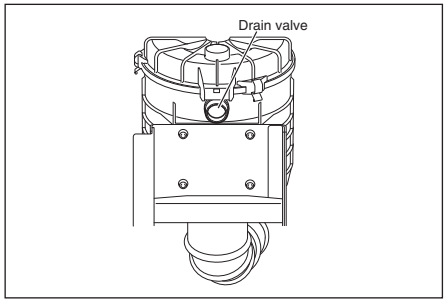

2. Clean the drain valve on the bottom of the air cleaner body.

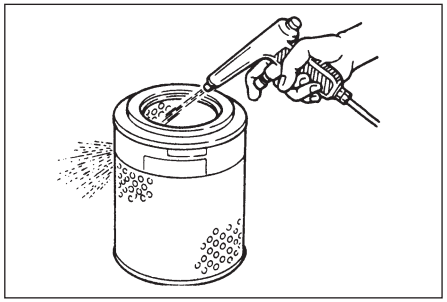

Cleaning the air cleaner element

To clean the element, apply one of the following methods according to the condition of the element.

When the air cleaner element is clogged with dust but dry:

Apply compressed air to the element from inside while turning the element by hand. The pressure of compressed air should not exceed **686 kPa (7 kgf/cm^2, 99.5 psi)**.

CAUTION

Do not apply compressed air to the outer face of the element as it causes the dust to lodge in the inner face.

QKR-IE-1442_4805234_ALL.indb 5–22 2017/09/27 13:34:53

https://truckmanualshub.com/

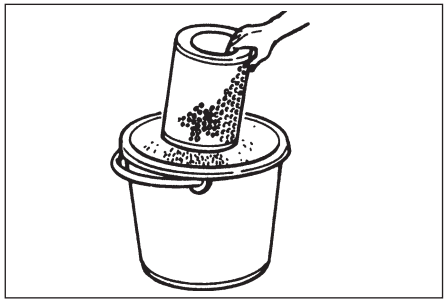

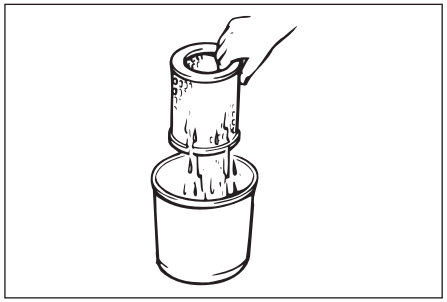

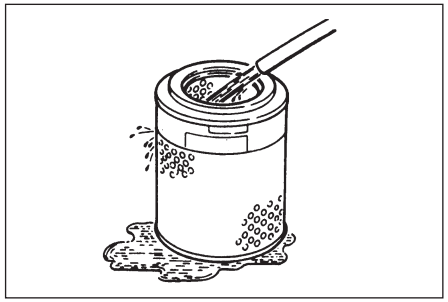

When the air cleaner element is clogged with carbon and oil:

1. Prepare a cleaning solution (laundry detergent dissolved in warm water).
2. Submerge the element in the cleaning solution for approximately 30 minutes. Occasionally shake the element inside the solution.
3. Take out the element and rinse it well with running water.
   The pressure of water should not exceed **274 kPa (2.8 kgf/cm^2, 39.8 psi)**.

QKR-IE-1442_4805234_ALL.indb 5–23 2017/09/27 13:34:54

https://truckmanualshub.com/

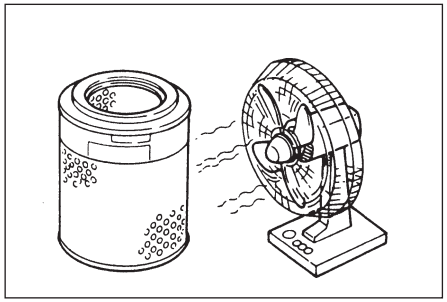

4. Allow the element to dry in a well ventilated place. To dry the element quickly, use an electric fan.
   Avoid use of compressed air or open flames for quick drying. It is recommended that a spare element be used as it normally takes 2 to 3 days for natural element drying.

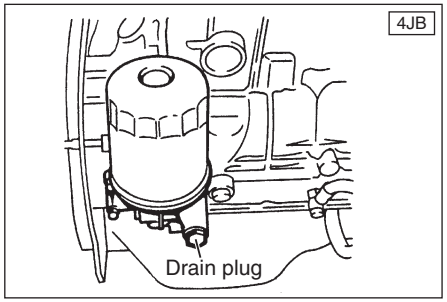

Main oil filter (on models with partial-flow oil filters)

1. Drain the engine oil by loosening the drain plug on the filter cover. 4JB
2. Loosen the oil filter by turning it counterclockwise with a filter wrench.
3. With a rag wipe clean the fitting face of the oil filter so that the new oil filter can be seated properly.

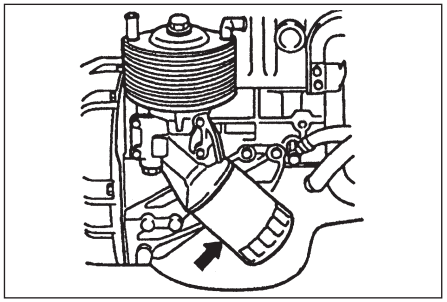

Oil filter

1. Loosen the oil filter by turning it counterclockwise with a filter wrench.
2. With a rag wipe clean the fitting face of the oil filter so that the new oil filter can be seated properly.

QKR-IE-1442_4805234_ALL.indb 5–24 2017/09/27 13:34:54

https://truckmanualshub.com/

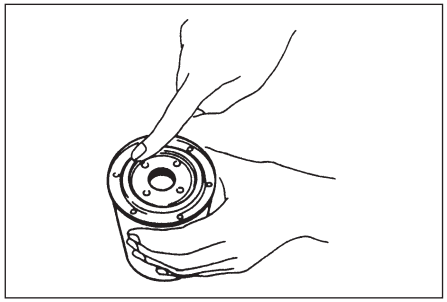

3. Lightly oil the O-ring and screw in the oil filter until the sealing face is fitted against the O-ring. Using the filter wrench, tighten the filter:

   1 1/8 turns

CAUTION

Check the level of the oil in the engine and replenish it to the specified level as necessary. Start the engine and check for leaks at the oil filter. It is strongly advisable to use an Isuzu genuine oil filter assembly for replacement.

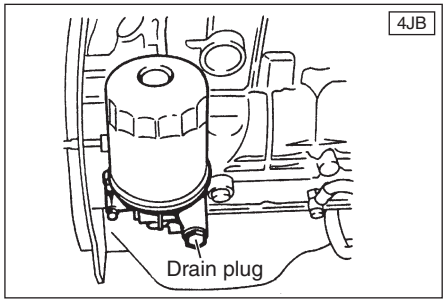

Partial-flow oil filter OPT

The oil filter body should also be drained when changing engine oil. Discard the filter element and install a new one regularly.

1. Drain engine oil by loosening the drain plug on the filter cover. 4JB
2. Loosen the oil filter by turning at counterclockwise with a filter wrench.
3. With a rag wipe clean the fitting face of the oil filter, so that the new oil filter can be seated properly.

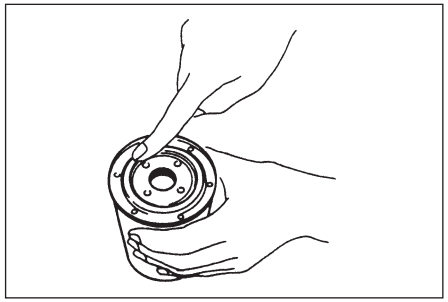

4. Lightly oil the O-ring and screw in the oil filter until the sealing face is fitted against the O-ring. Turn 1 1/4 turns further with a filter wrench.

CAUTION

Check the level of the oil in the engine and replenish it to the specified level as necessary. Start the engine and check for leaks at the oil filter.
It is strongly advisable to use an Isuzu genuine oil filter assembly for replacement.

QKR-IE-1442_4805234_ALL.indb 5–25 2017/09/27 13:34:54

https://truckmanualshub.com/

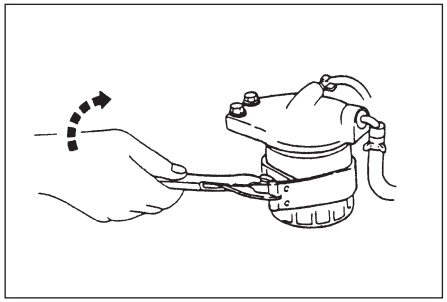

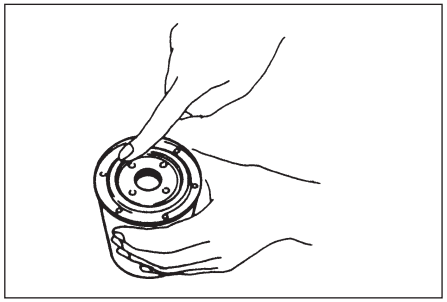

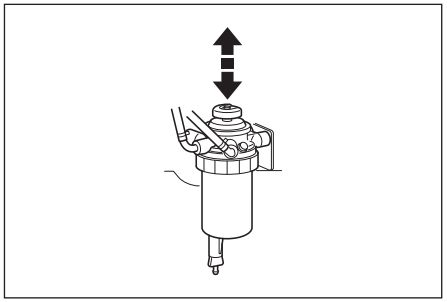

Fuel filter

4JB

1. Loosen the fuel filter by turning it counterclockwise with a filter wrench.
2. With a rag wipe clean the fitting face on the upper cover, so that the new fuel filter can be seated properly.
3. Lightly oil the O-ring. Reinstall and turn the filter assembly clockwise carefully to prevent the fuel from spilling. Turn it until the O-ring is fitted against the sealing face of the filter cover.

   Further turn the filter assembly **1/3** to **2/3** of a turn with a filter wrench.
4. Push the priming pump on the water separator several times to bleed fuel system of air.
5. Start the engine with the starter switch, when the bleeding has been finished.
6. If the engine does not start within ten seconds, repeat the bleeding operation.

QKR-IE-1442_4805234_ALL.indb 5–26 2017/09/27 13:34:54

https://truckmanualshub.com/

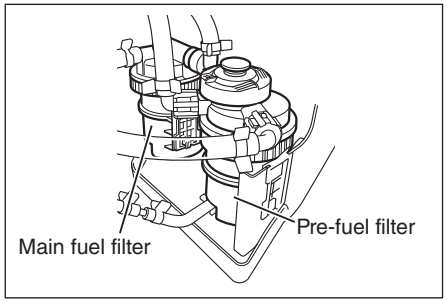

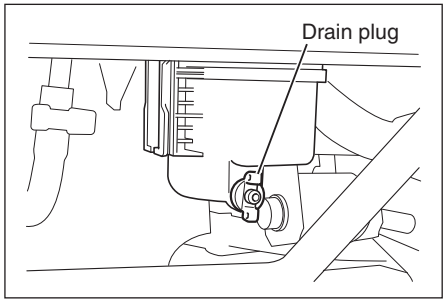

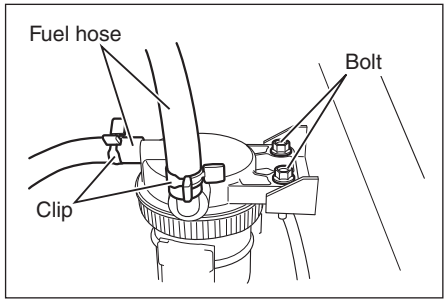

4JH

This type is equipped with 2 filters, a main fuel filter and a pre-fuel filter. Replace both filters at the same time.

Depending on the model, the positions and directions of the fuel filters are different.

Main fuel filter

1. Connect one end of a plastic hose to the drain plug at the bottom of the element case and place the other end of the hose inside a container to receive the drained fuel.
2. Loosen the drain plug to drain fuel. After draining, tighten the drain plug.
3. Pinch the clip of the fuel hose connected to the filter body and remove the fuel hose.

CAUTION

Prevent foreign matter from getting into the fuel hose. The engine may be damaged if foreign matter intrudes.

4. Loosen the installation bolt and remove the main fuel filter assembly.

QKR-IE-1442_4805234_ALL.indb 5–27 2017/09/27 13:34:54

https://truckmanualshub.com/

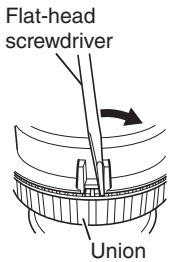

5. Insert a flat-head screwdriver into the groove on the filter body and turn the union to lightly loosen. After that, turn the union by hand and loosen halfway.

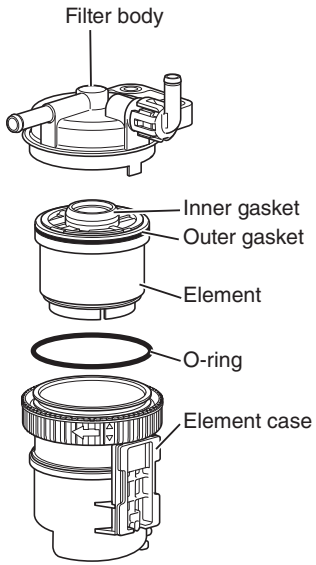

6. Further loosen the half loosened union and remove the element case. Then remove the element.
7. Remove the O-ring from the element case.
8. Use a clean cloth to wipe off any foreign matter that has accumulated on the inside surface of the filter body. In addition, clean any foreign matter or dirt inside the element case.

CAUTION

Do not use compressed air to remove foreign matter. Using compressed air could cause an intrusion of foreign matter into the fuel passage. (The engine may be damaged if foreign matter intrudes.) Use a clean cloth to remove any dirts.

9. Install a new O-ring to the element case and lightly coat the O-ring with diesel fuel.

QKR-IE-1442_4805234_ALL.indb 5–28 2017/09/27 13:34:54

https://truckmanualshub.com/

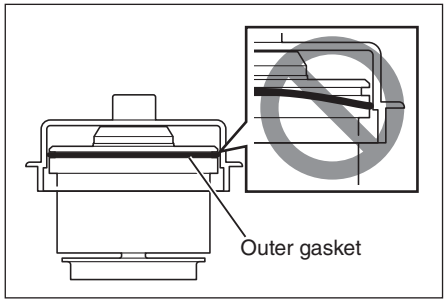

10. Lightly coat the inner gasket and outer gasket of the new element with diesel fuel.
    Insert the element into the filter body.

CAUTION

After inserting the element into the filter body, check that the outer gasket is securely engaged in the element groove. Incomplete installation may cause an intrusion of foreign matter into the fuel passage resulting in engine damage.

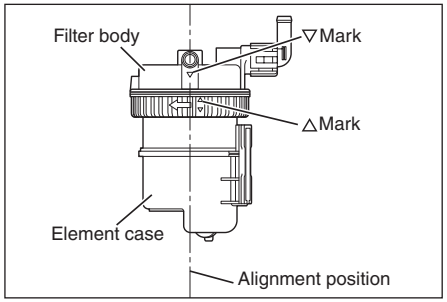

11. Install the element case to the filter body while holding the element with your hand.
    After aligning the filter body and element case to the alignment position shown in the illustration, align the claws on the filter body with the element case notches and tighten the union halfway, while holding the filter body and element case.
12. Tighten the union until the △ mark on the union comes to the right of the ▽ mark on the filter body.
13. Install the main fuel filter assembly with a bolt and nut.
    Tightening torque: 18.6 ± 4.9 N•m (1.9 ± 0.5 kgf•m / 13.7 ± 3.6 lbf•ft)
14. Connect the fuel hose to the filter body.

WARNING

Check that there is no breakage of the fuel hose such as cracking. Have your vehicle inspected at the nearest Isuzu dealer as soon as possible if there is any fuel hose breakage such as cracking.

QKR-IE-1442_4805234_ALL.indb 5–29 2017/09/27 13:34:55

https://truckmanualshub.com/

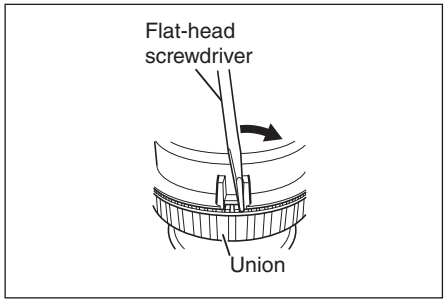

Pre-fuel filter

1. Insert a flat-head screwdriver into the groove on the filter body and turn the union to lightly loosen.

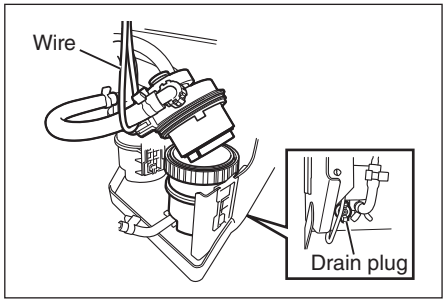

2. Turn the union by hand and pull out the filter body.
   At this time, check the alignment position of the filter body and element case.

NOTE

When pulling out the filter body, fuel will flow out of the filter body. Using a wire, etc., fasten at a high position so that fuel does not flow out.

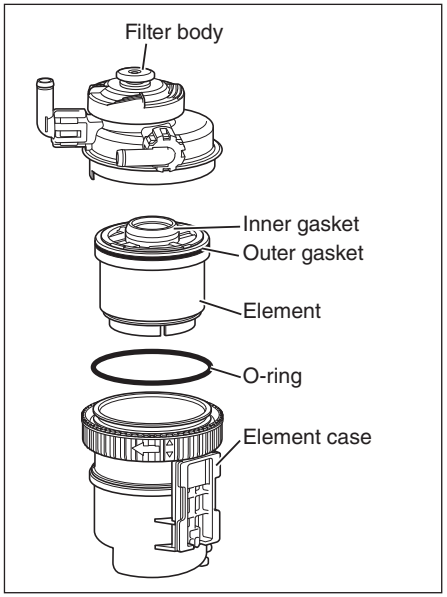

3. Remove the element from the filter body.
4. Connect one end of a plastic hose to the drain plug at the bottom of the element case and place the other end of the hose inside a container to receive the drained fuel.

QKR-IE-1442_4805234_ALL.indb 5–30 2017/09/27 13:34:55

https://truckmanualshub.com/

5. Loosen the drain plug to drain fuel. After draining, tighten the drain plug.
6. Remove the O-ring from the element case.
7. Use a clean cloth to wipe off any foreign matter that has accumulated on the inside surface of the filter body. In addition, clean any foreign matter or dirt inside the element case. At this time, check that the float at the bottom of the element case interior moves freely and smoothly.

CAUTION

Do not use compressed air to remove foreign matter. Using compressed air could cause an intrusion of foreign matter into the fuel passage. (The engine may be damaged if foreign matter intrudes.) Use a clean cloth to remove any dirts.

8. Install a new O-ring to the element case and lightly coat the O-ring with diesel fuel.

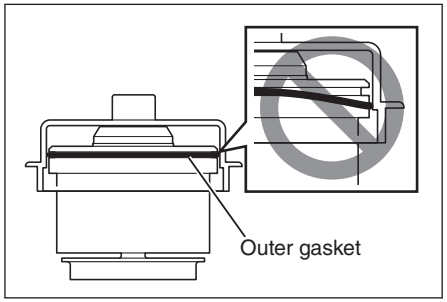

9. Lightly coat the inner gasket and outer gasket of the new element with diesel fuel.
   Insert the element into the filter body.

CAUTION

After inserting the element into the filter body, check that the outer gasket is securely engaged in the element groove. Incomplete installation may cause an intrusion of foreign matter into the fuel passage resulting in engine damage.

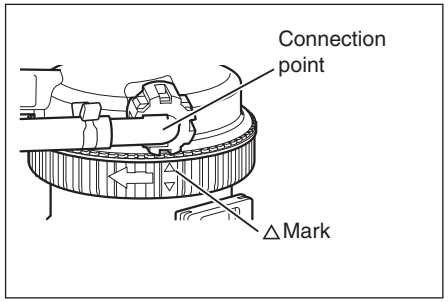

10. While supporting the element inserted into the filter body with your hand, install the filter body to the element case. After aligning the alignment positions of the filter body and element case, align the claws on the filter body with the element case notches and tighten the union until the △ mark on the union comes to the right of the connection point of the hose, while holding the filter body.
11. Bleed air from the fuel system.
12. Start the engine and check that there is no fuel leakage from the fuel filter.

QKR-IE-1442_4805234_ALL.indb 5–31 2017/09/27 13:34:55

https://truckmanualshub.com/

WARNING

Check that there is no breakage of the fuel hose such as cracking. Have your vehicle inspected at the nearest Isuzu dealer as soon as possible if there is any fuel hose breakage such as cracking.

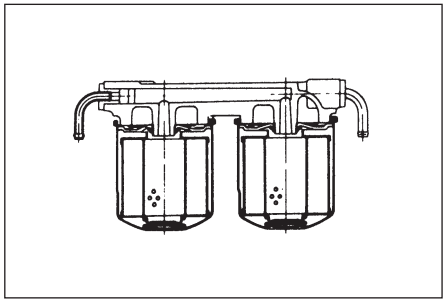

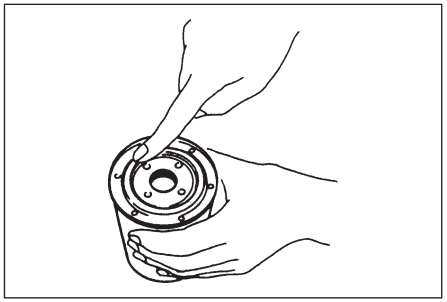

Dual type fuel filter OPT 4JB

1. Loosen each fuel filter by turning them counterclockwise with a filter wrench.
2. With a rag wipe clean the fitting face on the upper cover, so that the new fuel filter can be seated properly.
3. Lightly oil the O-ring. Install and turn in the filter assembly clockwise carefully to prevent fuel spillage. Turn it until the O-ring is fitted against the sealing face of the filter cover. Further turn the filter assembly **1/3** to **2/3** of a turn with the filter wrench.

CAUTION

It is strongly advisable to use an Isuzu genuine fuel filter assembly for replacement.

QKR-IE-1442_4805234_ALL.indb 5–32 2017/09/27 13:34:55

https://truckmanualshub.com/

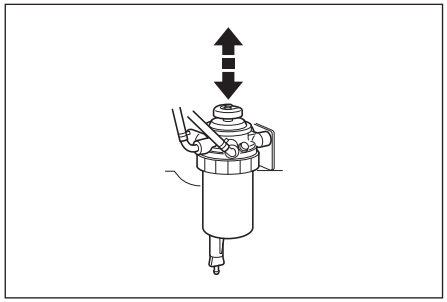

4. Push the priming pump on the water separator to bleed the fuel system.

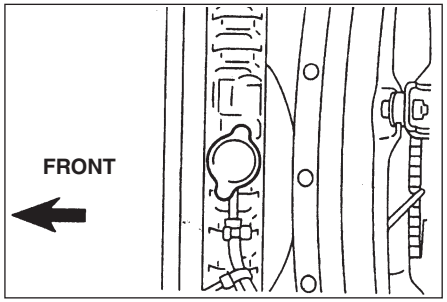

Engine coolant

Draining the cooling system

For proper instructions of the cooling system and the coolant, refer to "Engine cooling system" and "Preparing engine coolant".

1. Confirm that the engine has fully cooled down before starting work.
2. Remove the radiator cap.

WARNING

- ***When the engine coolant is heated to a high temperature, be sure not to remove the radiator cap or reserve tank cap. If removing unnecessarily, steam spouts and may cause a burn.***

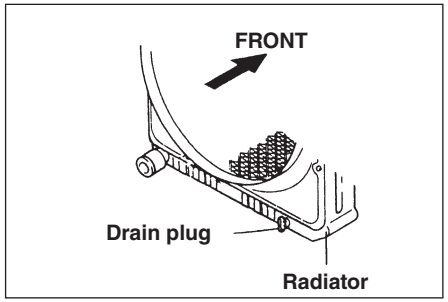

The reserve tank or engine coolant temperature inside of the reserve tank is also very hot, so its boiling water may cause a burn. Be sure to perform checking, adding or changing when engine coolant temperature is low. To open the radiator cap or reserve tank cap, put a piece of thick cloth on the cap and loosen the cap slowly.

- ***Engine coolant is toxic and must not be ingested. If the engine coolant is mistakenly ingested, immediately vomit it and seek prompt medical attention.***

WARNING (Continued)

QKR-IE-1442_4805234_ALL.indb 5–33 2017/09/27 13:34:55

https://truckmanualshub.com/

WARNING (Continued)

- ***If the engine coolant gets in your eyes, rinse it off immediately with a large amount of water for 15 minutes or longer. Also, if still abnormality such as irritation is felt, seek medical attention.***
- ***If the engine coolant gets on your skin, rinse it off using a soap with a large amount of water. Also, if abnormality is seen, seek medical attention.***
- ***Keep fire away from the engine coolant since it is easy to catch fire. Also it may catch fire if it is splashed on some parts that are in high temperature such as a manifold. Take care not to splash it.***
- ***For storage, close the cap securely and keep it in a place inaccessible to children.***

CAUTION

- ***The radiator cap is a double-action type that must be opened and closed in two turning motions. When removing the cap, take care not to damage the cap or filler.***
- ***Tighten the radiator drain plug by hand. Tightening with pliers or some other tool could damage it.***

NOTE

Discard the drained engine coolant in the specified way.

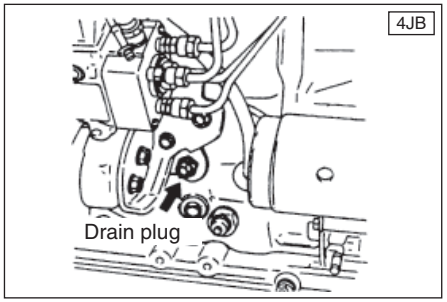

3. Open the drain plugs on the radiator and the engine to let the engine coolant run out. Drain the engine coolant from the reserve tank as well.
4. Tighten the drain plugs on the radiator and the engine. Apply sealant (LOCTITE® 262 or equivalent) to the screw threads of the engine drain plug before installing it.
   Engine drain plug tightening torque:
   21.6 N•m (2.2 kgf•m / 16 lb•ft)

QKR-IE-1442_4805234_ALL.indb 5–34 2017/09/27 13:34:55

https://truckmanualshub.com/

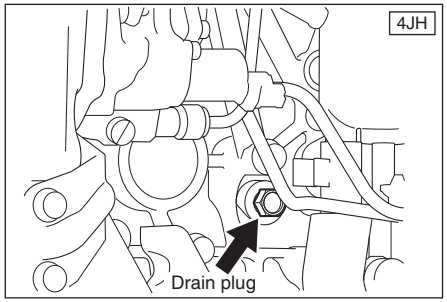

WARNING

Do not start the engine when engine coolant has been drained from the radiator. This could cause the engine to seize up.

NOTE

For best results it is suggested that the engine cooling system should be flushed when the engine coolant is replaced. It is advisable to flush the interior of the cooling system including the radiator before using the engine coolant solution.

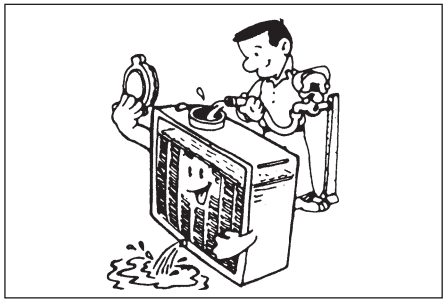

Cleaning the engine coolant passages

1. Remove the air bleed plug from the water outlet (if equipped). Refill the radiator with tap water up to the top of the opening. After refilling, tighten the air bleed plug.
   Water outlet air bleed plug tightening torque: 23.5 N•m (2.4 kgf•m / 17 lbf•ft)

CAUTION

The radiator cap is a double-action type that must be opened and closed in two turning motions. When removing the cap, take care not to damage the cap or filler.

2. Check and clean the radiator cap. Replace the cap if there is anything abnormal with it.
3. Securely fasten the radiator cap.
4. Engine coolant may leak from even minor cracks. Replace damaged rubber hoses.
5. Refill the reserve tank with tap water to the "MAX" line.
6. Close the cap of the reserve tank.
7. Start the engine and let it idle for 20 minutes. Stop the engine, wait until it cools down, and then drain out the water.
   (Refer to "Draining the cooling system".)

QKR-IE-1442_4805234_ALL.indb 5–35 2017/09/27 13:34:55

https://truckmanualshub.com/

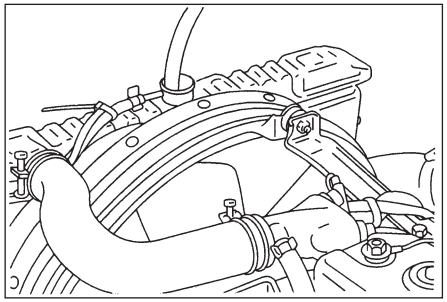

Filling the cooling system

CAUTION

- ***A failure to correctly fill the engine cooling system in changing or topping up engine coolant may sometimes cause the engine coolant to overflow from the filler neck even before the engine and radiator are completely full.***
- ***If the engine runs under this condition, the shortage of engine coolant may possibly result in engine overheating. To avoid such trouble, the following precautions should be taken when refilling with the engine coolant.***

1. Confirm that the engine has fully cooled down before starting work.
2. Tighten the drain plugs on the radiator and the engine.
   Apply sealant (LOCTITE® 262 or equivalent) to the screw threads of the engine drain plug before installing it.
   Engine drain plug tightening torque: 21.6 N•m (2.2 kgf•m / 16 lb•ft)
3. Remove the air bleed plug from the water outlet (if equipped) and pour engine coolant in the specified concentration. After filling with engine coolant, replace the gasket of air bleed plug with a new one and tighten the air bleed plug.
   Water outlet air bleed plug tightening torque: 23.5 N•m (2.4 kgf•m / 17 lbf•ft)

CAUTION

- ***The radiator cap is a double-action type that must be opened and closed in two turning motions. When removing the cap, take care not to damage the cap or filler.***
- ***Refill with engine coolant slowly to avoid air being mixed in.***

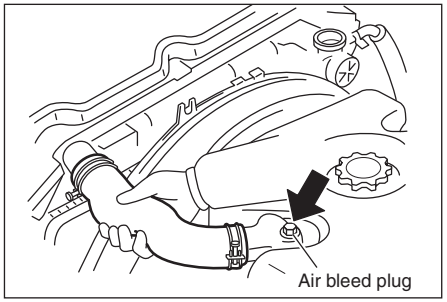

4. Squeeze the radiator upper hose two or three times. If this action results in air being discharged from the hose and the level of engine coolant goes down, add engine coolant up to the top of the radiator filler opening from the radiator cap section. Repeat until the level of the engine coolant no longer decreases.

QKR-IE-1442_4805234_ALL.indb 5–36 2017/09/27 13:34:56

https://truckmanualshub.com/

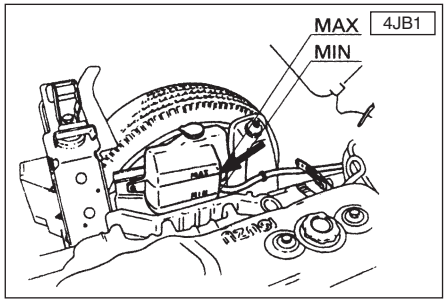

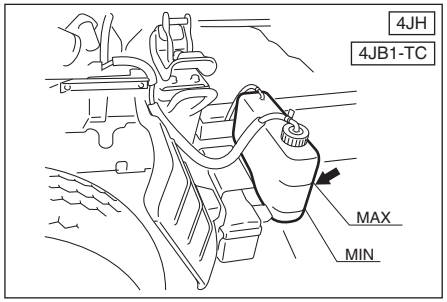

5. Close the radiator cap.
6. Fill the reserve tank with engine coolant to the "MAX" line. Close the cap of the reserve tank.
7. Start the engine, let it idle for 5 minutes or more and then stop the engine.
8. After checking that the engine has sufficiently cooled down, remove the radiator cap. If the engine coolant level has decreased, replenish with engine coolant up to the radiator filler opening. If the engine coolant level has abnormally decreased, check for leaks from the radiator, the engine coolant passages, or the reserve tank hose.
9. After firmly closing the radiator cap, idle the engine until the needle of the coolant temperature gauge reaches the center and the thermostat opens. In order to save time, if the vehicle is equipped with a warm-up switch, turn the switch on to warm up the engine. If the vehicle is not equipped with a warm-up switch, maintain the engine speed approximately 2,000 r/min to warm up the engine. After the needle of the coolant temperature gauge reaches the center, increase the engine speed to approximately 2,000 r/min, and maintain this speed for 5 minutes. If the vehicle is equipped with an air conditioner, turn the A/C switch off to facilitate warming. If the vehicle is equipped with a heater, turn off the fan to facilitate warming. Check if the thermostat is open or not by checking whether the upper hose and lower hose are hot. If the vehicle is equipped with a heater, turn the temperature control to the maximum setting and make sure that hot air comes out.
10. Let the engine idle for 5 minutes and then stop the engine.
11. After checking that the engine has sufficiently cooled down, remove the radiator cap and check the engine coolant level. If the engine coolant level has decreased, replenish with engine coolant up to the radiator filler opening from the radiator cap section. If the engine coolant level has abnormally decreased, check for

https://truckmanualshub.com/

engine coolant leaks.

12. Repeat steps 9 through 11 until the engine coolant level in the radiator filler opening stops declining.
13. Firmly close the radiator cap.
14. Replenish the engine coolant in the reserve tank up to the "MAX" line, and then close the reserve tank cap.
15. Check the engine coolant level of the reserve tank the next morning. If the engine coolant level has decreased, refill with engine coolant to the "MAX" line.

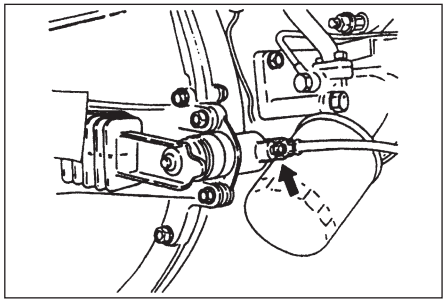

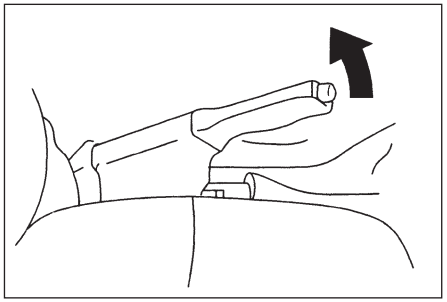

Bleeding of clutch hydraulic circuits

If air enters the clutch circuit, it will cause clutch dragging. Therefore, bleeding operation should be performed if the clutch fluid reservoir has been emptied due to failure or if the hydraulic circuit has been disassembled. Bleeding operation calls for the cooperative action of the two men.

To bleed, proceed as follows:

1. Set the parking brake.

QKR-IE-1442_4805234_ALL.indb 5–38 2017/09/27 13:34:56

https://truckmanualshub.com/

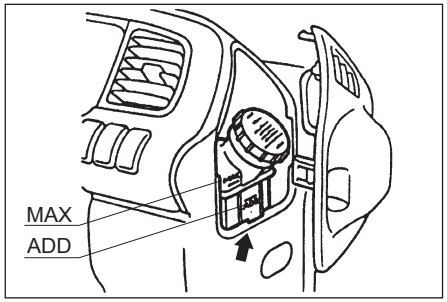

2. Check the level of the clutch fluid in the reservoir and replenish it if necessary.

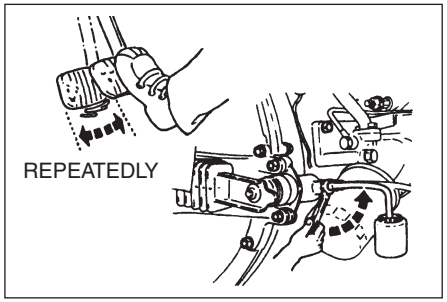

3. Remove the rubber cap from the bleeder screw and wipe clean the bleeder screw. Connect a vinyl tube to the bleeder screw and insert the other end of the vinyl tube into a transparent container.
4. Depress the clutch pedal repeatedly and hold it depressed.

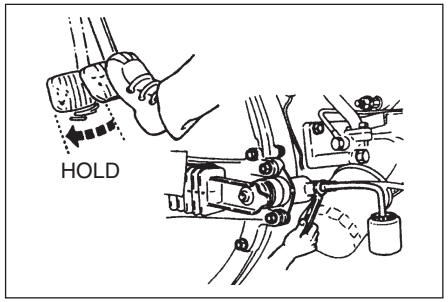

5. Hold it to depress.
6. Loosen the bleeder screw on the clutch slave cylinder to release clutch fluid with air bubbles into the container and tighten the bleeder screw immediately.
7. Release the clutch pedal carefully. Repeat the above operation until air bubbles disappear from the clutch fluid being pumped out into the container. During the bleeding operation, keep the clutch fluid reservoir filled to the specified level.
   Reinstall the rubber cap.

QKR-IE-1442_4805234_ALL.indb 5–39 2017/09/27 13:34:56

https://truckmanualshub.com/

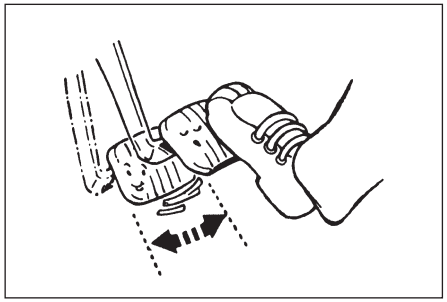

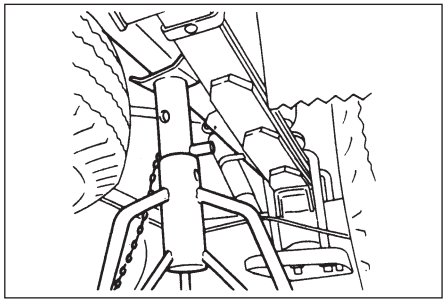

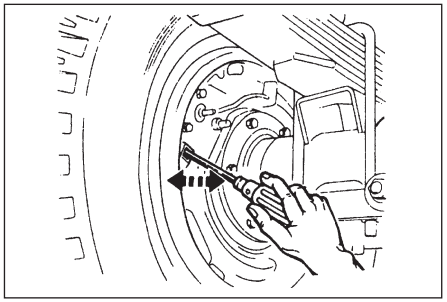

Service brake adjustment

The use of a brake system with excessive brake lining clearances is unsafe as the brake performance deteriorates with an increase in lining clearance. The brake lining clearance should be checked and adjusted at specified intervals.

To adjust front and rear brakes, proceed as follows:

1. Jack up a wheel clear of the ground.
2. Then set a supporter for safety.
3. Remove the rubber plugs from the brake adjuster holes in the front and rear faces of the brake back plate.
4. Insert a screwdriver into adjuster hole and turn the adjuster in the direction of the arrow until the wheel can not turn.
5. Back off the adjusters 5 to 6 notches.
6. Replace the rubber plugs in position.
7. Repeat the above adjustment procedures for adjusting the brakes on the remaining wheels.

QKR-IE-1442_4805234_ALL.indb 5–40 2017/09/27 13:34:56

https://truckmanualshub.com/

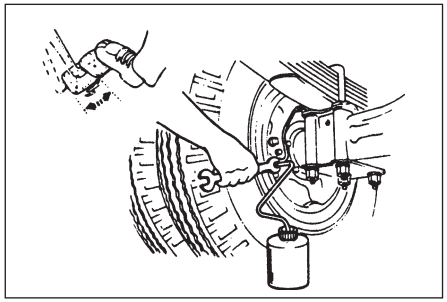

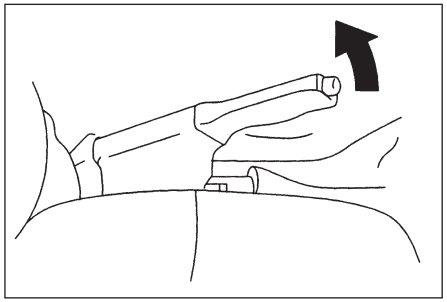

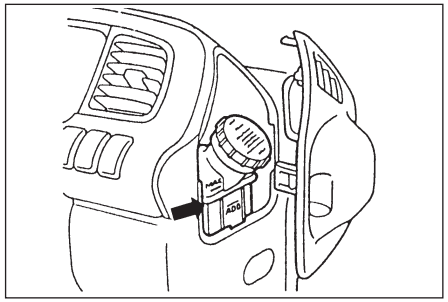

Bleeding of the brake hydraulic circuit

If air enters the brake lines, it will cause poor braking. Therefore, the bleeding operation should be performed if the brakes have been used with an excessive level of brake fluid in the reservoir or if the brake pipes have been disconnected in the course of brake servicing. Bleeding operation calls for the cooperative action of two men.

To bleed, proceed as follows:

1. Set the parking brake firmly.
2. Start and keep the engine running until the vacuum accumulates sufficiently.

CAUTION

Brake booster (master-vac) will be adversely affected if the bleeding operation is performed without running the engine.

3. Check the level of brake fluid in the reservoir and replenish it as necessary.

QKR-IE-1442_4805234_ALL.indb 5–41 2017/09/27 13:34:56

https://truckmanualshub.com/

4. Bleeding of the brake hydraulic circuit should be performed in the following sequence:
   Right-hand rear wheel –> Right-hand front wheel –> Left-hand front wheel.
   LHD
   Right-hand rear wheel –> Left-hand front wheel –> Right-hand front wheel.
   RHD

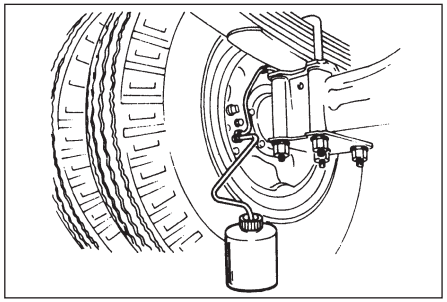

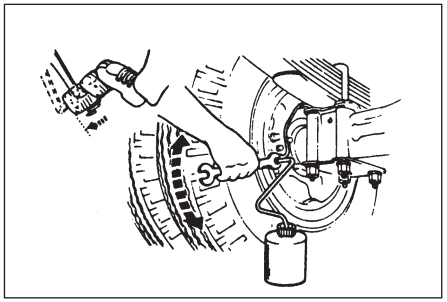

5. Remove the rubber cap from the bleeder screw and wipe and clean the bleeder screw. Connect a vinyl tube to the bleeder screw and insert the other end of the vinyl tube into a transparent container.

6. Pump the brake pedal slowly 3 times and hold it depressed.
   Loosen the bleeder screw to release brake fluid with air bubbles into the container and tighten the bleeder screw immediately.

QKR-IE-1442_4805234_ALL.indb 5–42 2017/09/27 13:34:56

https://truckmanualshub.com/

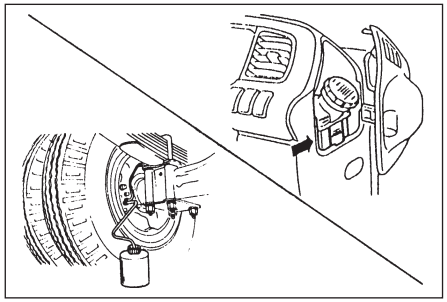

7. Release the brake pedal carefully. Repeat the above operation until air bubbles disappear from the brake fluid being pumped out into the container. During the bleeding operation, keep the brake fluid reservoir filled to the specified level. Install the rubber cap.

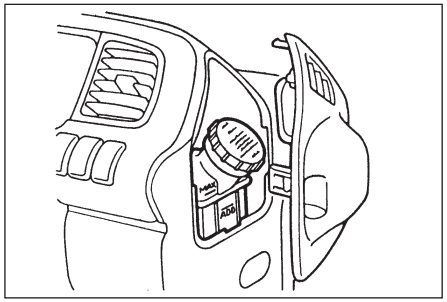

8. When the bleeding operation is completed on each wheel, check the level of brake fluid in the reservoir and replenish it as necessary.

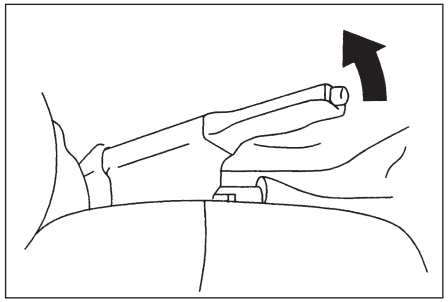

Parking brake adjustment

The parking brake lever stroke is normal when the lever comes within 6 to 8 notches when pulled with a force of **15 kg (33 lbs, 147N)**. The parking brake can be adjusted in the following manner:

1. Chock the front wheels.
2. Release the parking brake.
3. Loosen the lock nut.
4. Turn the adjust nut to loosen the cable completely.

QKR-IE-1442_4805234_ALL.indb 5–43 2017/09/27 13:34:56

https://truckmanualshub.com/

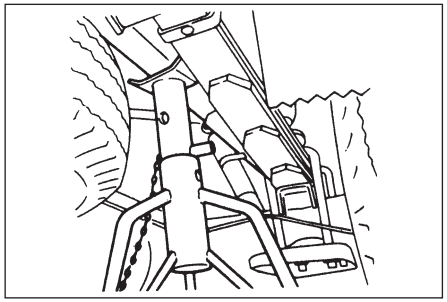

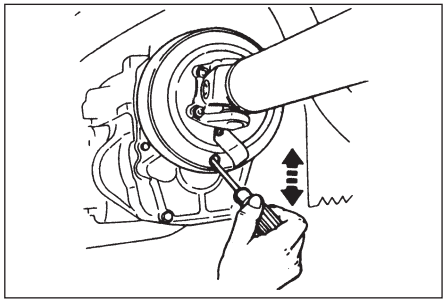

5. Jack up the rear wheels clear of the ground. Set a supporter for safety, move the gearshift lever into the neutral position and bring the adjuster hole in the brake drum into alignment with the adjuster by turning the propeller shaft. The adjuster is positioned below the center line of the propeller shaft.
6. Fit a screwdriver into the adjust hole in the brake drum and turn the adjuster upward all the way until it stops.
7. Back off the adjuster 30 notches and check the stroke of the brake lever.

Adjuster screw notches and clearance

Notches	Clearance mm (in)
30	**0.78** (0.03)

QKR-IE-1442_4805234_ALL.indb 5–44 2017/09/27 13:34:57

https://truckmanualshub.com/

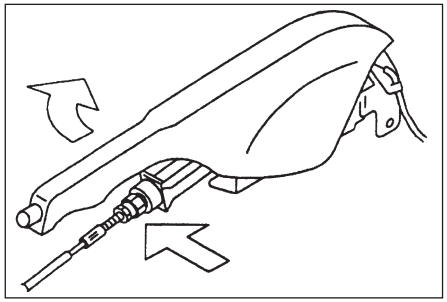

To set the parking lever stroke to the normal range, adjust the setting of the parking brake cable with the adjust nut as follows:

(1) Loosen the lock nut.
(2) Adjust the length of the cable with the adjust nut.
(3) Tighten and lock the adjust nut with the lock nut.

Tire rotation

To allow the tires to wear evenly and to prolong their life, exchange the front and rear tire locations as shown in the figure.

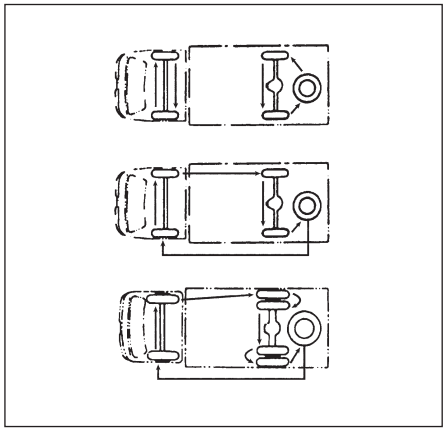

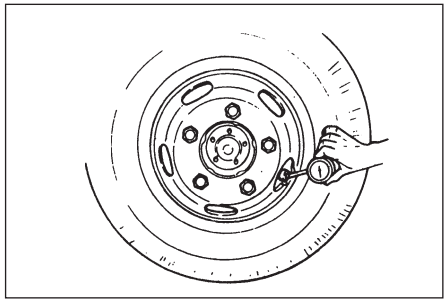

Tire inflation pressure

Check the tire inflation pressure securely. Especially on vehicles with double tire, it is hard to find out by visual check even if one of the tires has lost its pressure. Therefore, use a tire gauge to check the tire pressure.
Be sure to check the spare tires, too.
For standard inflation pressures, refer to "MAIN DATA AND SPECIFICATIONS".

WARNING

- ***Never drive the vehicle unless the tires are properly inflated and in safe condition.***

WARNING (Continued)

https://truckmanualshub.com/

WARNING (Continued)

- ***Over-inflation or under-inflation can affect vehicle handling and result in loss of control as well as excessive tire wear and tire damage.***
- ***Especially, the tire pneumatic pressure lowered thus may cause the tire to wear out earlier or overheat, causing burst. If the tire bursts, it may burn. In the worst case, fire will take place in the vehicle.***

NOTE

Check or maintain tire pressure when the tires are cold. (After the vehicle has been inoperative for more than 3 hours or driven less than 1.6 km (1 mile)).

Inner and outer ones of double tires must be the same tire pressure.

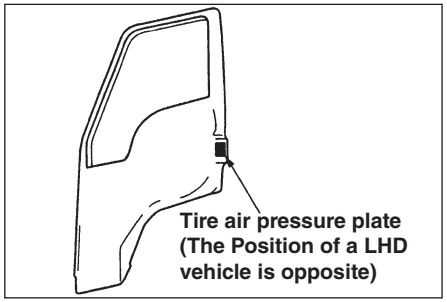

Tire air pressure plate

The recommended tire pressure is listed on each tire air pressure plate, pasted on the inner position of the driver's side door. (Partial Vehicle)

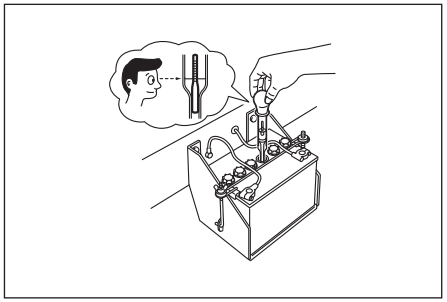

Specific gravity of battery electrolyte

Check the specific gravity of the battery electrolyte using a hydrometer. If the specific gravity is too low, the battery should be charged.
Specific gravity at an electrolyte temperature of 20°C (68°F): 1.27 to 1.29

QKR-IE-1442_4805234_ALL.indb 5–46 2017/09/27 13:34:57

https://truckmanualshub.com/

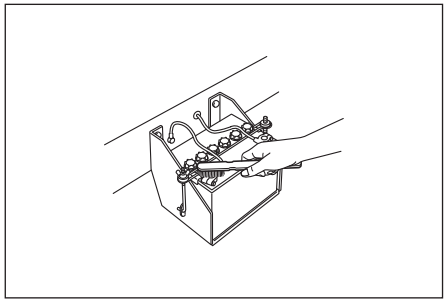

Cleaning of battery

If the external part of the battery is dirty, clean with tepid water. Apply a thin coat of vaseline or grease to the battery terminals to prevent corrosion.

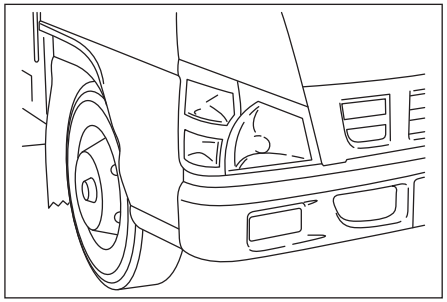

Head lights

Proper aiming of the head lights is most important to ensure sufficient illumination of the highway without blinding other motorists. When light aiming is necessary it is advisable to contact an authorized dealer who has special equipment for this purpose.

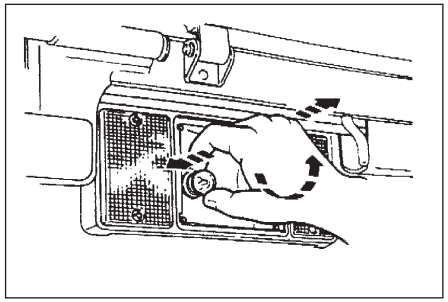

Replacing light bulbs

The illustration shows how to gain access to the bulbs.
When replacing a bulb, make sure the light switch is "OFF". Use only bulbs with the same wattage rating. The standard bulb wattage ratings are shown on the chart.

QKR-IE-1442_4805234_ALL.indb 5–47 2017/09/27 13:34:57

https://truckmanualshub.com/

Location		Wattage	
		12 volt system	No. of bulbs
Halogen head lights	-	60W/55W	2
Front combination lights	Turn signal	21W	2
	Cornering/ Clearance	21W/5W	2
Rear combination lights	Stop/Tail	21W/5W	2
	Turn signal	21W	2
	Back up	21W	2
License plate light	-	V 10W	1
		V 5W	2
Dome light	-	10W	1
V Fog lights	-	55W	2
V Rear fog light	-	21W	1

QKR-IE-1442_4805234_ALL.indb 5–48 2017/09/27 13:34:57

https://truckmanualshub.com/

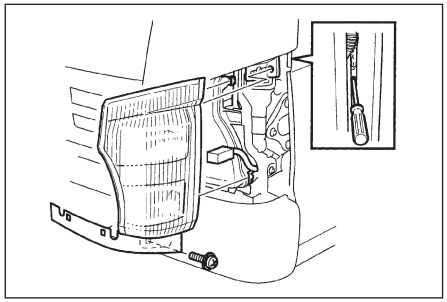

Front combination lights

[Removal procedure]

1. Remove the seal rubber under the head light and loosen the side screw of front combination light assembly.
2. Pull out the front combination light assembly. At this time, open the front door and push the stud pin head by inserting a cross slot screwdriver through the clearance between the door and cab.

[Installation procedure]

1. Connect the connector of front combination light assembly.
2. Position it by aligning two pawls with the groove of head light.
3. Fit the iron pin in the upper side portion by aligning it with the center of corresponding grommet.

NOTE

Push it in securely until a click is heard.

4. Pull the front combination light assembly lightly toward the front of vehicle to make sure that the pin and grommet are fitted securely.
5. Tighten the lower side screw of front combination light assembly. Then, hook the seal rubber on two projections under the head light.

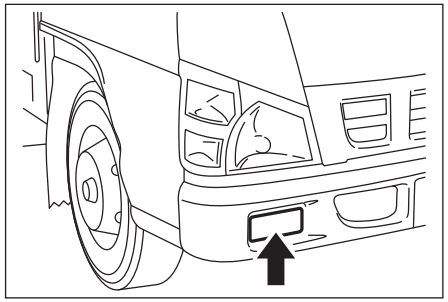

Fog lights V

Remove the screws retaining the lens and remove the lamp unit.

QKR-IE-1442_4805234_ALL.indb 5–49 2017/09/27 13:34:57

https://truckmanualshub.com/

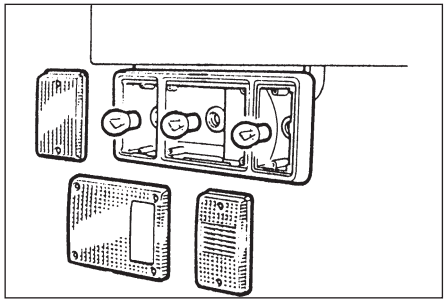

Rear combination lights

Remove the screws retaining the lens and remove the lens.

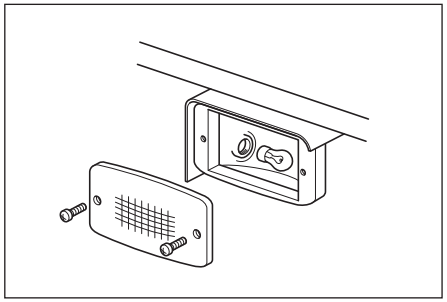

Rear fog light V

Remove the screws retaining the lens and remove the lens.

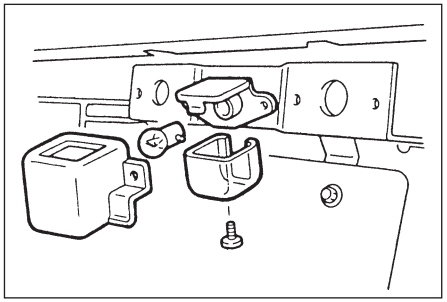

License plate light

The lens can be pulled out easily with screwdriver.

QKR-IE-1442_4805234_ALL.indb 5–50 2017/09/27 13:34:57

https://truckmanualshub.com/

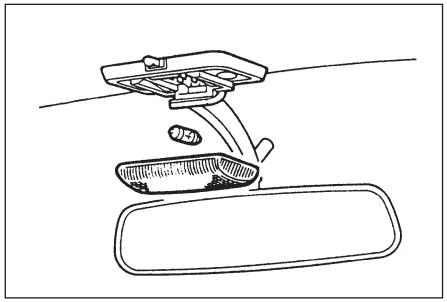

Dome light

The cover of the light can be removed very easily with a screwdriver.

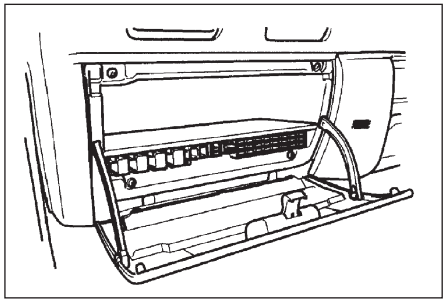

Fuse junction block

The fuse box is located in the glove box. Open the glove box cover to check and replace fuses.
The cover can be easily pulled out manually.
To replace a fuse, use the provided fuse puller.

NOTE

If a fuse has been burnt out, check to locate the cause of the trouble and give necessary service attention before replacing the fuse.

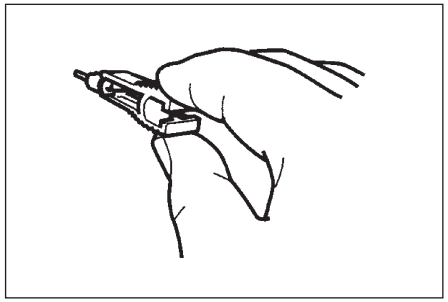

When replacing a fuse, turn the starter switch to the "LOCK" position and only use fuses of the same amperage.

Use specified fuses only. Unspecified fuses can cause fire and malfunction of equipment.

QKR-IE-1442_4805234_ALL.indb 5–51 2017/09/27 13:34:57

https://truckmanualshub.com/

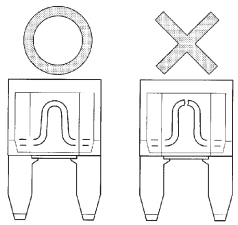

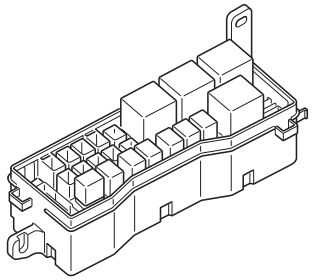

Fusible link

If the head lights or other electrical components do not work and the fuses are OK, check the fusible link.
If a fusible link is burnt out, it must be replaced with one of the same amperage.

WARNING

Always use Isuzu genuine fusible links for replacement.

Never install a wire, even if it is temporary. It may cause extensive damage and possibly a fire.

If there is an overload in the circuits from the battery, the fusible links are designed to burn out before the entire wiring harness is damaged.

WARNING

The cause of electrical overload should always be determined before replacing a fusible link.

QKR-IE-1442_4805234_ALL.indb 5–52 2017/09/27 13:34:58

https://truckmanualshub.com/

Fuse and fusible link location

The numbers (1 to 28) in the illustration indicate the fuse numbers, and circled numbers (1 to 23) indicate the relay numbers.

Refer to the table on the following page for the specified amperages and names of each fuse, as well as names of each relay.

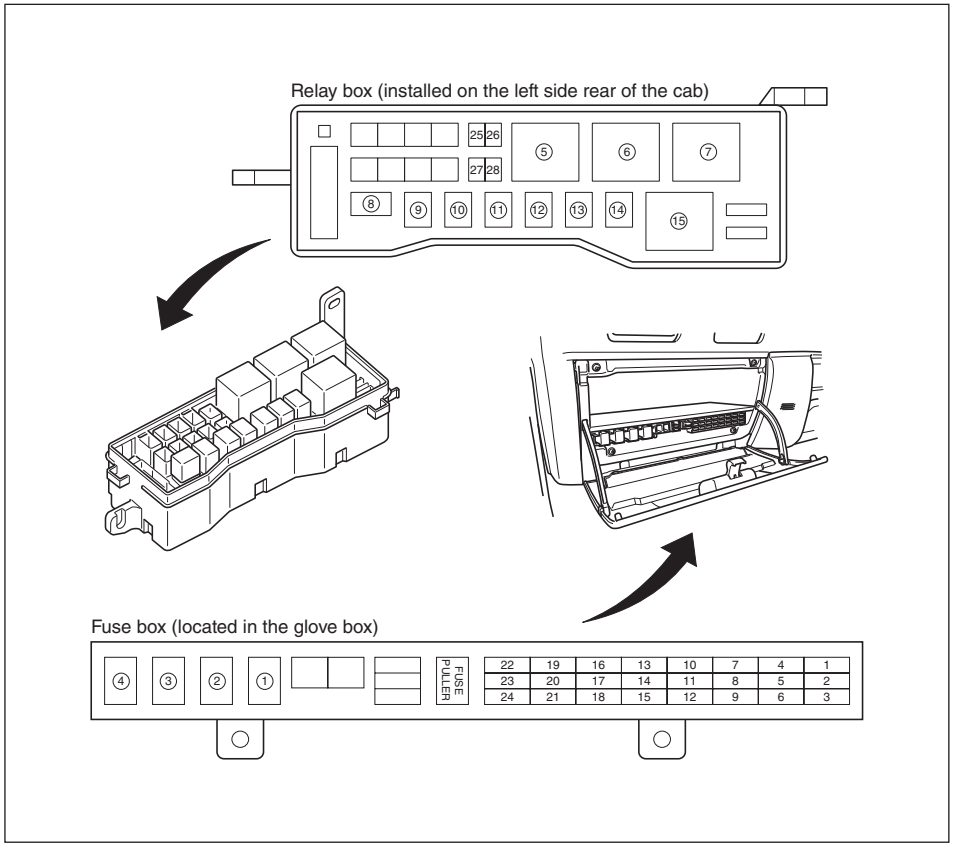

QKR-IE-1442_4805234_ALL.indb 5–53 2017/09/27 13:34:58

https://truckmanualshub.com/

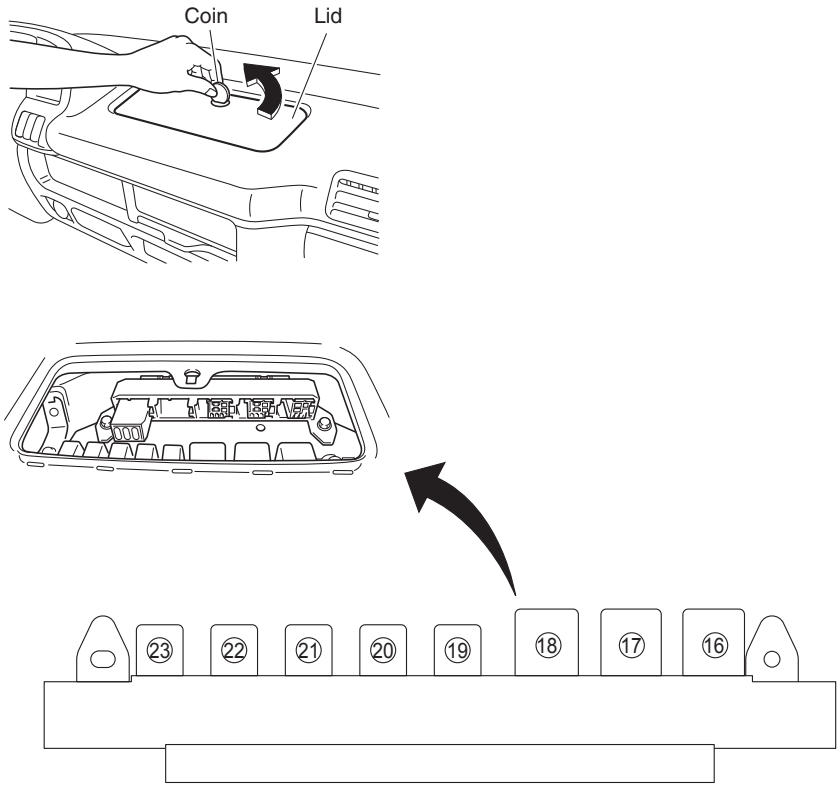

Relay box (located in the dashboard)

QKR-IE-1442_4805234_ALL.indb 5–54 2017/09/27 13:34:58

https://truckmanualshub.com/

Fuse

No.		12V 4JB1 MODEL ENGINE	
Fuse	1	10A	AIR CON
	2	15A	EXH. BRAKE, FUEL HEATER
	3	15A	REAR HEATER
	4	15A	AUDIO (B), DOOR LOCK
	5	10A	STOP LIGHT
	6	10A	FRT FOG LIGHT, CORNERING LAMP
	7	10A	TAIL LIGHT
	8	10A	EGR
	9	10A	FUEL CUT
	10	15A	FRONT WIPER & WASHER
	11	10A	TURN LIGHT
	12	10A	H/LAMP LEVEL
	13	-	-
	14	-	-
	15	15A	AUDIO (IG), CIGAR LIGHTER
	16	10A	METER
	17	-	-
	18	-	-
	19	15A	HORN, HAZARD
	20	10A	ABS (IG)
	21	15A	GENERATOR
	22	10A	STARTER
	23	10A	HEAD LIGHT RH
	24	10A	HEAD LIGHT LH
	25	15A	MARKER LAMP
	26	-	-
	27	10A	RR FOG
	28	-	-

Relay

No.		12V 4JB1 MODEL ENGINE
Relay	1	TAIL
	2	HEAD LAMP
	3	HORN
	4	WIP KEY ON
	5	-
	6	-
	7	GLOW
	8	MARKER LAMP
	9	RR FOG
	10	-
	11	EXH BRAKE CUT
	12	CSD
	13	-
	14	-
	15	STARTER
	16	BLOWER
	17	CHARGE WARNING
	18	-
	19	CORNER LAMP
	20	EXH BRAKE
	21	P/WINDOW
	22	DIMMER
	23	-

QKR-IE-1442_4805234_ALL.indb 5–55 2017/09/27 13:34:58

https://truckmanualshub.com/

Fuse

No.		12V 4JH1 MODEL ENGINE	
Fuse	1	25A	HEATER
	2	10A	AIR CON
	3	-	-
	4	15A	AUDIO (B), DOOR LOCK
	5	25A	P/WINDOW
	6	10A	STOP LAMP
	7	15A	TAIL LAMPS
	8	10A	FOG LAMP
	9	-	-
	10	10A	ECU (BATT)
	11	15A	HORN, HAZARD
	12	-	-
	13	15A	WIPER
	14	10A	TURN LAMPS
	15	15A	ACC, CIGAR LIGHTER
	16	10A	METER
	17	10A	ECM
	18	-	-
	19	-	-
	20	10A	ABS
	21	15A	GENERATOR
	22	10A	STARTER
	23	10A	HEAD LAMP RH
	24	10A	HEAD LAMP LH
	25	-	-
	26	10A	ECM2
	27	-	-
	28	20A	ECM

Relay

No.		12V 4JH1 MODEL ENGINE
Relay	1	TAIL
	2	HEAD LAMP
	3	HORN
	4	WIP KEY ON
	5	-
	6	-
	7	GLOW
	8	-
	9	-
	10	-
	11	-
	12	STARTER CUT
	13	-
	14	ECM MAIN
	15	STARTER
	16	HEATER AC
	17	CHARGE (ENG RUN)
	18	THERMO
	19	ECU IGN
	20	CORNERING LAMP
	21	POWER WINDOW (model with power window)
	22	DIMMER
	23	-

QKR-IE-1442_4805234_ALL.indb 5–56 2017/09/27 13:34:58

https://truckmanualshub.com/

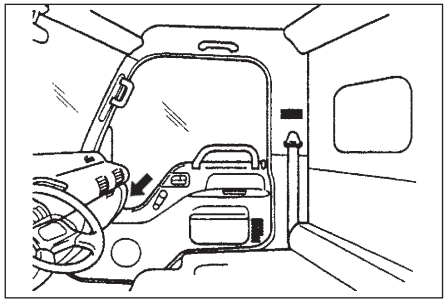

Cleaning inside cab

CAUTION

Do not wash by sousing water directly inside the cab. It causes a malfunction of electronic control devices installed on the back side of the glove box or rust on the floor.

QKR-IE-1442_4805234_ALL.indb 5–57 2017/09/27 13:34:58

https://truckmanualshub.com/

LUBRICATION

Lubricants should be carefully selected according to the lubrication chart. It is also important to select viscosity of lubricants according to the ambient temperature by referring to the following table.

Oil viscosity chart for diesel engines

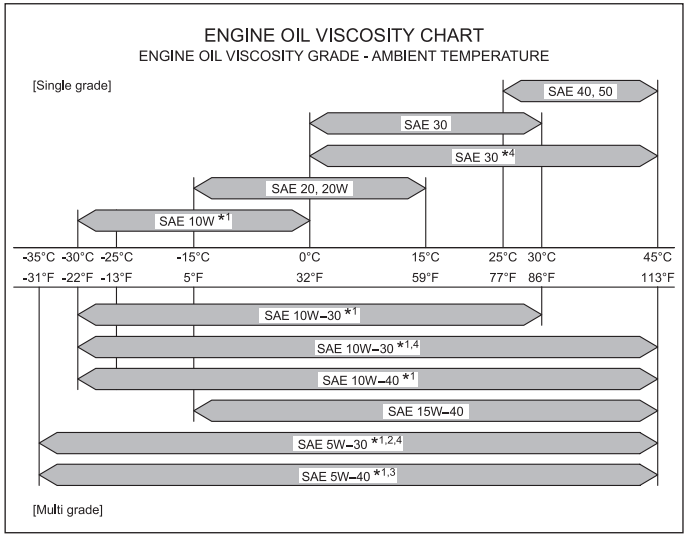

*1:At ambient temperatures below -25°C (-13°F), this can only be used when starting aids (oil pan heater, block heater, etc.) are used.
*2:In the case of 5W-30 oil for commercial vehicles (CV), only Isuzu genuine oil can be used.
*3:5W-40 oil is specified as the recommended oil only for cold regions (Russia, China, etc.).
*4:Use is possible at ambient temperatures up to 45°C (113°F) only in the case of Isuzu genuine oil.

Oil viscosity chart for transmission cases

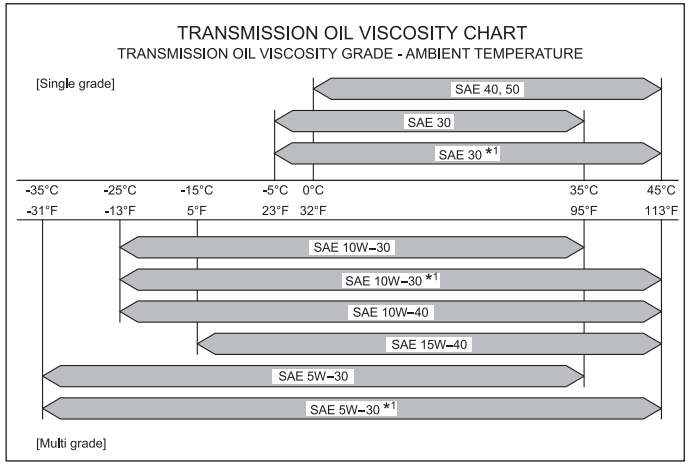

*1:Use is possible at ambient temperatures up to 45°C (113°F) only in the case of Isuzu genuine oil.

QKR-IE-1442_4805234_ALL.indb 5–58 2017/09/27 13:34:58

https://truckmanualshub.com/

Oil viscosity chart for rear axle

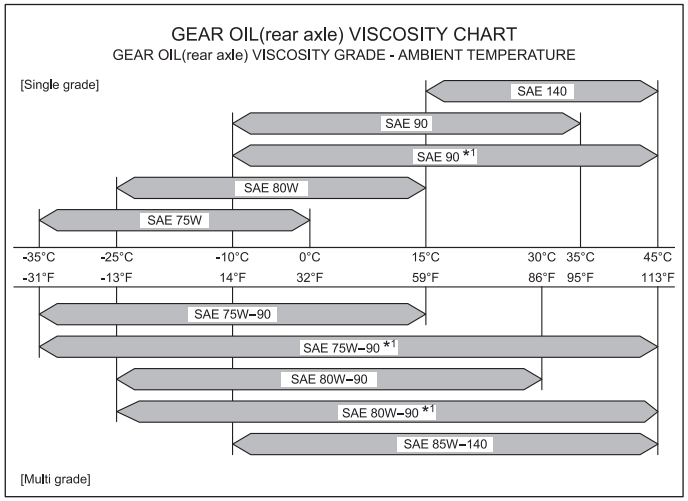

*1:Use is possible at ambient temperatures up to 45°C (113°F) only in the case of Isuzu genuine oil.

QKR-IE-1442_4805234_ALL.indb 5–59 2017/09/27 13:34:58

https://truckmanualshub.com/

RECOMMENDED FLUIDS, LUBRICANTS AND DIESEL FUELS

In order to obtain maximum performance and longest service life from your ISUZU vehicles, it is very important to select and use correctly best lubricants and diesel fuels.
When lubricating, be sure to use ISUZU genuine lubricants or recommended lubricants listed below, according to the maintenance schedule for each vehicle model.
The lubrication intervals in the maintenance schedule and the coverage and period of new vehicle warranty are based on the use of ISUZU genuine lubricants or recommended lubricants as given in the chart which will serve as a guide for selecting lubricants of proper brand name.

QKR-IE-1442_4805234_ALL.indb 5–60 2017/09/27 13:34:58

https://truckmanualshub.com/

LUBRICATION	MAKER	BRAND/TYPE	GRADE		
			API	ACEA	JASO
Diesel engine crankcase	**ISUZU**	**BESCO DURAMAX (10W-30)**	**CH-4**	**—**	**DH-1**
	ISUZU	**BESCO MULTI Z CH-4 (10W-30)**	**CH-4**	**—**	**DH-1**
	ISUZU	**BESCO MULTI Z CH-4 (10W-40)*1**	**CH-4**	**—**	**—**
	Castrol	Tection J-Max (15W-40)	CH-4	E3	DH-1
	Chevron/Texaco/Caltex	Delo 400 Multigrade (15W-40)	CI-4	E7	DH-1
	Chevron/Texaco/Caltex	Delo Gold Multigrade (15W-40)	CH-4	E3	—
	Elf	Performance Victory (15W-40)	CI-4	E7	—
	ExxonMobil	Delvac MX (15W-40)	CI-4	E7	—
	ExxonMobil	Delvac 1 (5W-40)	CI-4	E7	DH-1
	Shell	Rimula R4X (15W-40)	CI-4	E7	DH-1
	Total	Rubia Works 1000 (15W-40)	CI-4	E7	DH-1
	Total	Rubia TIR 7400 (15W-40)	CI-4	E7	—
Differential	**ISUZU**	**BESCO GEAR SH (80W-90), (90), (140)**	**GL-5**	**—**	**—**
	Castrol	Syntrax Universal (80W-90)	GL-5/MT-1	—	—
	Chevron/Texaco/Caltex	Delo Gear EP-5 (80W-90), (85W-140)	GL-5/MT-1	—	—
	Elf	Tranself Type B (80W-90), (85W-140)	GL-5	—	—
	ExxonMobil	Mobil Delvac 1 Gear Oil (75W-90)	GL-5/MT-1	—	—
	ExxonMobil	Mobilube S (80W-90)	GL-5/MT-1	—	—
	Shell	Spirax S2 A IZ (80W-90)	GL-5	—	—
	Shell	Spirax S3 AX (80W-90)	GL-5	—	—
	Total	Transmission Gear 9 (80W-90)	GL-5/MT-1	—	—
	Total	Transmission Axle 7 (80W-90), (85W-140)	GL-5	—	—

NOTE:
*1: Models for Russian market

QKR-IE-1442_4805234_ALL.indb 5–61 2017/09/27 13:34:58

https://truckmanualshub.com/

LUBRICATION	MAKER	BRAND/TYPE	GRADE		
			API	ACEA	JASO
Manual transmission	**ISUZU**	**BESCO TRANSAXLE (5W-30)**	—	—	—
	Chevron/Texaco/Caltex	Delo 400 Multigrade (15W-40)	CI-4	E7	DH-1
	Elf	Performance Victory (15W-40)	CI-4	E7	—
	ExxonMobil	Delvac MX (15W-40)	CI-4	E7	—
	Shell	Rimula R4X (15W-40)	CI-4	E7	DH-1
	Total	Rubia TIR 7400 (15W-40)	CI-4	E7	—
Power steering	**ISUZU**	**BESCO ATF III (Dexron® III)**	—	—	—
	BP	Autran DXIII (Dexron® III)	—	—	—
	Castrol	ATF Heavy Duty (Dexron® III)	—	—	—
	Chevron/Texaco/Caltex	Havoline ATF-J (Dexron® III)	—	—	—
	ExxonMobil	Mobil Multipurpose ATF (Dexron® III)	—	—	—
	Shell	Spirax S3 ATF MD3 (Dexron® III)	—	—	—
	Total	Fluidmatic IIIG (Dexron® III)	—	—	—
	Total	Fluide G3 (Dexron® III)	—	—	—
Tie rod end Center bearing Kingpins (Multi purpose grease)	**ISUZU**	**BESCO L2 GREASE (No.2), L3 GREASE (No.3)**	—	—	—
	Chevron/Texaco/Caltex	Delo Starplex EP (No.2)	—	—	—
	ExxonMobil	Mobilgrease XHP 222 (No.2), 223 (No.3)	—	—	—
	Shell	Gadus S3 V220C 2 (No.2)	—	—	—
	Total	Multis Complex EP2 (No.2), EP3 (No.3)	—	—	—
Propeller shaft sliding yoke Universal joint (Multi purpose grease containing molybdenum disulfide)	**ISUZU**	**BESCO ONE LUBER Mo GREASE (No.2)**	—	—	—
	Chevron/Texaco/Caltex	Multifak Moly EP (No.2)	—	—	—
	Shell	Gadus S2 V220AD 2 (No.2)	—	—	—
	Total	Multis Complex HV2 Moly (No.2)	—	—	—

QKR-IE-1442_4805234_ALL.indb 5–62 2017/09/27 13:34:58

https://truckmanualshub.com/

COOLANT	MAKE	BRAND*
Engine cooling system	**ISUZU** Arteco BASF Total Total	**BESCO LLC SUPER TYPE E, AS** Havoline XLC Glysantin G34 Glacelf Auto Supra Coolelf Auto Supra 37

*: Use Isuzu recommended coolant, or GENERAL MOTORS ENGINEERING STANDARDS GM6277M (Ethylene glycol based non-silicate and non-borate coolant) or equivalent.

FLUID	MAKER	BRAND	GRADE*
Clutch and brake fluid reservoir	**ISUZU** AC Delco	**BESCO BRAKE FLUID SUPER** Supreme 11	**DOT 3** DOT 3

*: This material meets GENERAL MOTORS ENGINEERING STANDARDS GM4653M, FMVSS 116 or SAE J1703 requirements.

DIESEL FUEL/APPLICABLE STANDARD	
JIS (JAPANESE INDUSTRIAL STANDARDS)	Based on K2204: 1997 Diesel Fuel
DIN (DEUTSCHE INDUSTRIE NORMEN)	Based on EN590: 1997
ASTM (AMERICAN SOCIETY FOR TESTING AND MATERIALS)	Based on D975-04c No.1-D S500 or No.2-D S500 (below 500 ppm)
BS (BRITISH STANDARDS)	Based on BS EN590: 1997

DIESEL FUEL/APPLICABLE STANDARD (Sulfur content below 50ppm)	
JIS (JAPANESE INDUSTRIAL STANDARDS)	Based on K2204: 2007 Diesel Fuel
DIN (DEUTSCHE INDUSTRIE NORMEN)	Based on EN590: 2004
ASTM (AMERICAN SOCIETY FOR TESTING AND MATERIALS)	Based on D975-04c NO.1-D S15 or NO.2-D S15 (below 15 ppm)
BS (BRITISH STANDARDS)	Based on EN590: 2004

NOTE:
Do not use fuels other than those listed above. Doing so may adversely affect the engine.

QKR-IE-1442_4805234_ALL.indb 5–63 2017/09/27 13:34:58

https://truckmanualshub.com/

LUBRICATION CHART: QKR55 AND QKR77

◎ : Change
○ : Check and Replenish or Lubricate
E : Engine oil
G : Gear oil
W : Wheel bearing grease
C : Multipurpose type grease
M : MoS_2 contained type grease
B : Brake fluid
A : Automatic transmission fluid

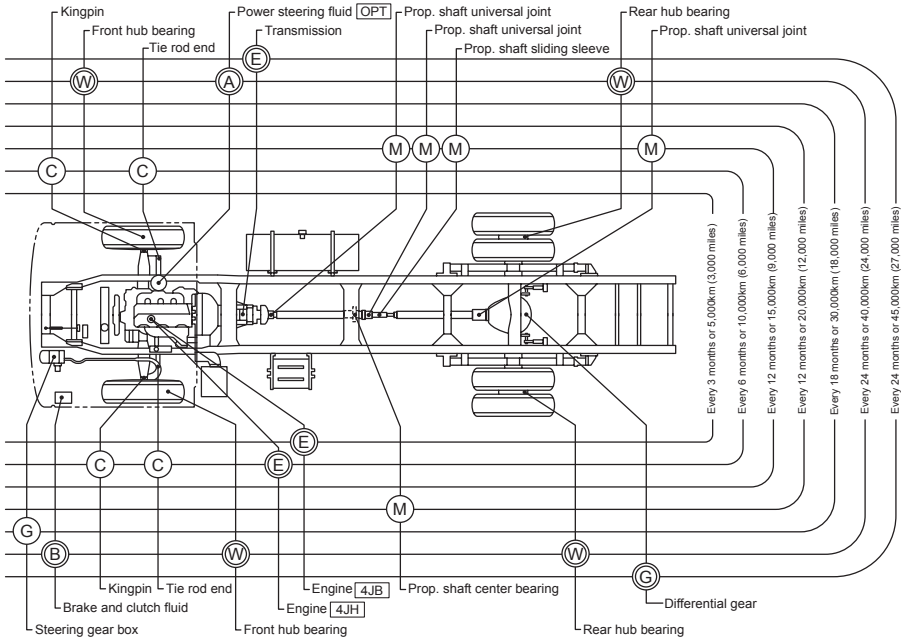

QKR-IE-1442_4805234_ALL.indb 5–64 2017/09/27 13:34:58

https://truckmanualshub.com/

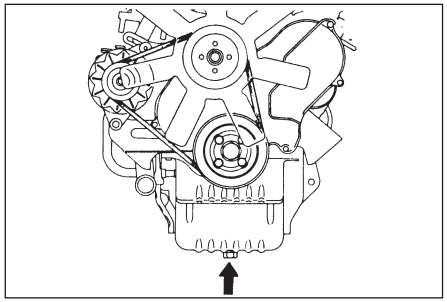

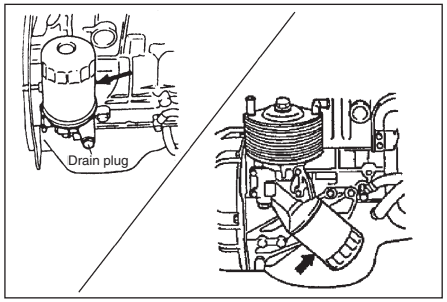

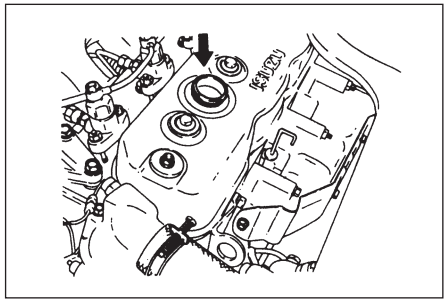

LUBRICATION GUIDE

Changing engine oil

Drain the engine crankcase completely by removing the drain plug on the lower part of the oil pan, main oil filter and partial-flow oil filter.

WARNING

A hot engine oil can cause severe skin burns. Allow the engine to cool before draining the engine oil.

When the engine crankcase and oil filter are completely drained, reassemble the drain plug.

Then fill the engine crankcase from the filler port with new engine oil of the specified grade.

QKR-IE-1442_4805234_ALL.indb 5–65 2017/09/27 13:34:59

https://truckmanualshub.com/

NOTE

Use the recommended engine oil. (Refer to "RECOMMENDED FLUIDS, LUBRICANTS AND DIESEL FUELS".)

When the engine crankcase is filled to the high level mark on the oil dipstick, start and let the engine idle for a few minutes. Stop the engine and recheck the oil level and replenish, if necessary.

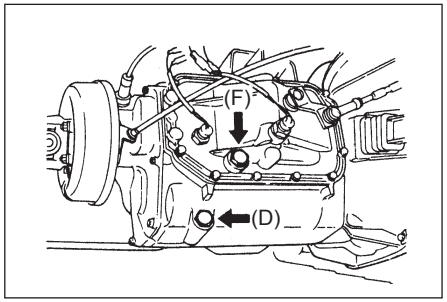

Changing transmission oil

Drain the transmission case by removing the drain plug (D) on the lower face of the transmission case. Fill the transmission case to the filler plug (F) with the specified engine oil through the filler plug hole.

WARNING

Right after driving, the oil may be hot, so be careful.

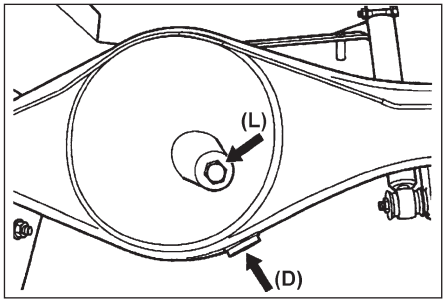

Changing differential oil

Drain the rear axle case by removing the drain plug (D) on the lower part of the rear axle case. Fill the rear axle case to the level plug (L) with specified gear oil through the level plug hole.

Use GL-5 Gear Lubricant of the correct viscosity for the existing ambient temperatures.

QKR-IE-1442_4805234_ALL.indb 5–66 2017/09/27 13:34:59

https://truckmanualshub.com/

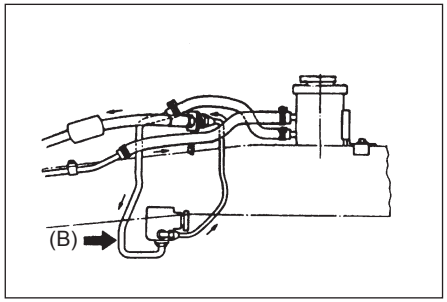

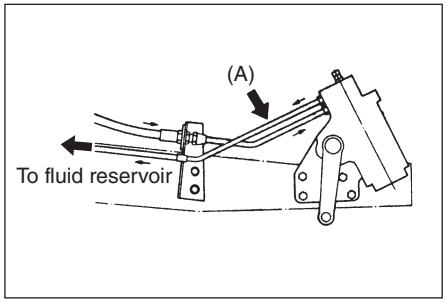

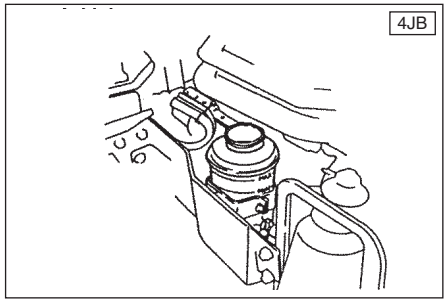

Changing power steering fluid

Draining:

1. Jack up the front wheels until they are clear of the ground.
2. Remove the fluid pipe (A) between the steering unit and the fluid reservoir, and the fluid hose (B) between the pump and the fluid reservoir.
3. When draining is completed, remove the remaining fluid within the hydraulic system by turning the steering wheel until it stops in both directions several times.

Refilling:

1. Install the fluid pipe and hose securely and fill the fluid reservoir with the specified automatic transmission fluid.
2. When the fluid reservoir is filled to the specified level, allow 2 or 3 minutes.

NOTE

After refilling regularly check and keep fluid reservoir replenished as necessary to prevent air from entering the hydraulic system.

3. Lower the front wheels to the ground. Start the engine and let it idle for a few minutes.
   Recheck the fluid level and replenish if necessary.

QKR-IE-1442_4805234_ALL.indb 5–67 2017/09/27 13:34:59

https://truckmanualshub.com/

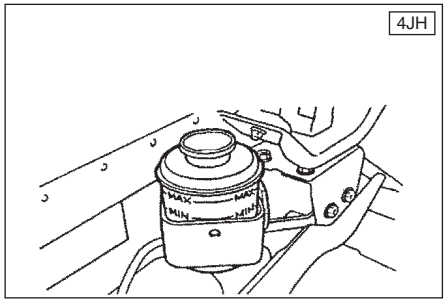

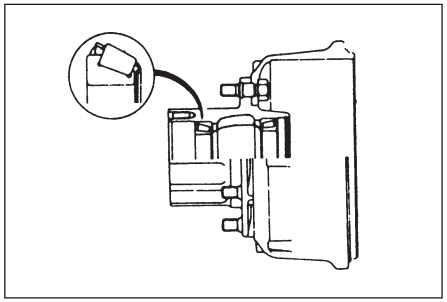

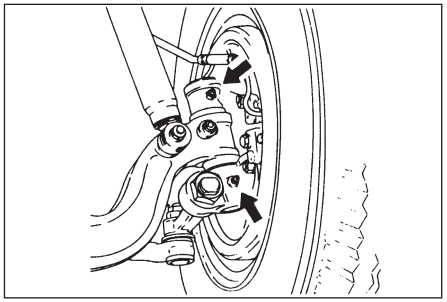

Repacking the front and rear hub bearing with grease

It is suggested that the vehicle be brought into an Isuzu dealer when the above operation becomes necessary as the operation calls for disassembly and reassembly operations.

Greasing points

Lubricate the following points with multipurpose type grease.
Kingpins (4 points).

QKR-IE-1442_4805234_ALL.indb 5–68 2017/09/27 13:34:59

https://truckmanualshub.com/

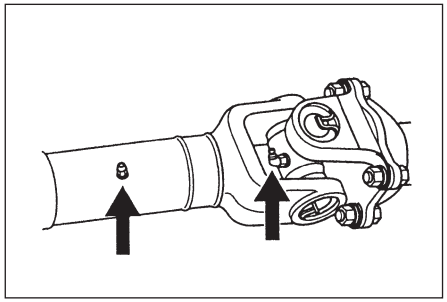

Lubricate the following points with MoS_2 type grease.
Universal joints and sliding sleeve.

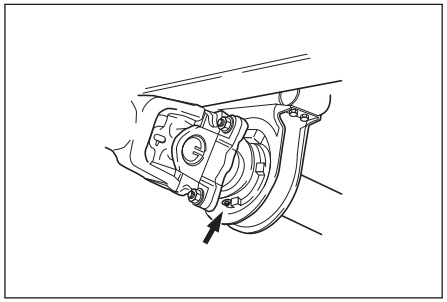

Lubricate the following points with wheel bearing grease.
Center bearing.

CORRECT CARGO LOADING

Overloading and uneven loading are very dangerous. Please use the correct loading based on the standard maximum load. Wrong loading may cause unstable operation, overload on one of the axles, and an excessive load on the wheel bolts. This is a major factor of the accident that a wheel comes off due to wheel bolt breakage. Also, the cargo bed and frame will be damaged.

QKR-IE-1442_4805234_ALL.indb 5–69 2017/09/27 13:34:59

https://truckmanualshub.com/

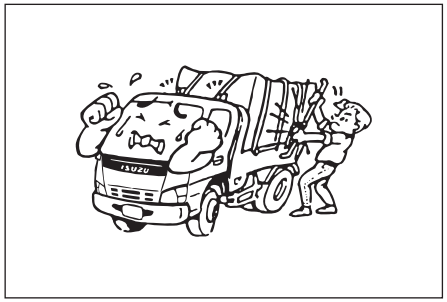

Never apply unnecessarily large force.

Fix the load securely using a load cover or rope to prevent it from falling, but do not apply unnecessarily large force as this could break or otherwise damage the side drop, tail gate and guard frame, etc.

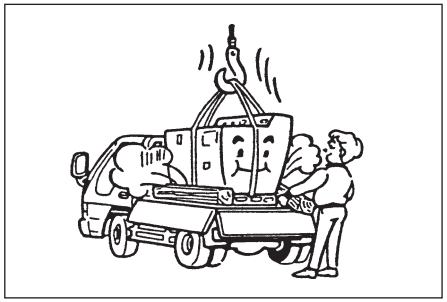

When loading with a heavy cargo:

In case of heavyweight cargo, use pads under the cargo to prevent it from moving and fix it firmly with wire rope, etc. Do not fix cargo using excessive force.

Keep flammable materials away from the gap between the cab and the guard frame.

Make certain the load cover or rope ends are tucked in tight and not hanging free in the gap behind the cab, as the engine heat may cause a fire while driving.

QKR-IE-1442_4805234_ALL.indb 5–70 2017/09/27 13:34:59

https://truckmanualshub.com/

Loading methods

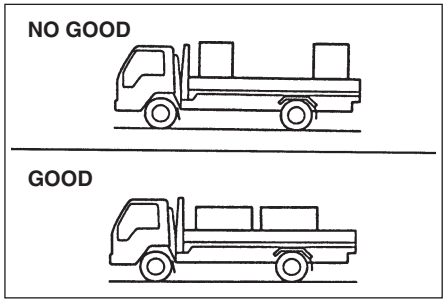

Do not leave a large space between loads.
Distribute the load evenly.

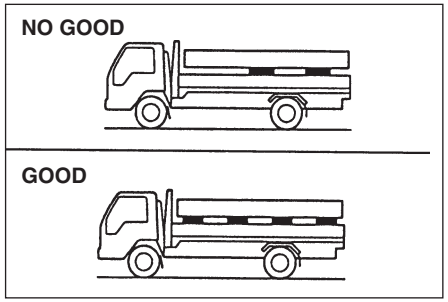

When using supports under a load, distribute them evenly.

QKR-IE-1442_4805234_ALL.indb 5–71 2017/09/27 13:34:59

https://truckmanualshub.com/

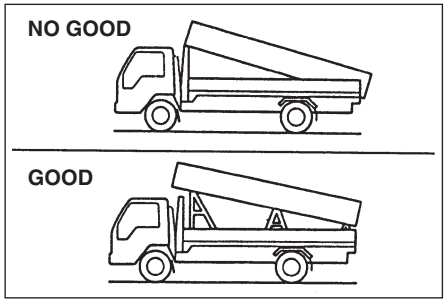

Place supports underneath when carrying an extra-long item. Do not support it with the guard frame or the rear end of the bed.

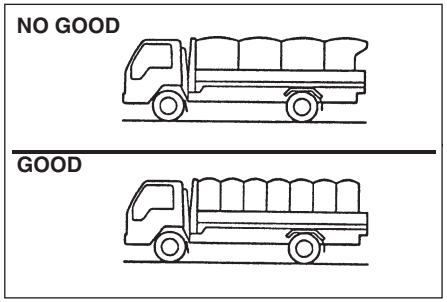

Secure the load with a load cover and rope to prevent it from falling. Tuck the fixing material with rubber bands or other appropriate material.

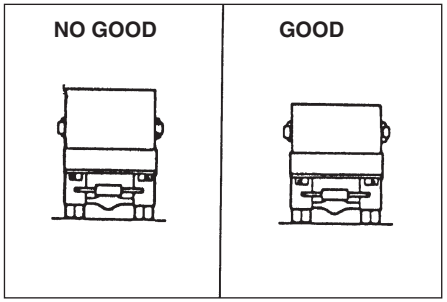

Avoid high loading.
Minimize the height to prevent the vehicle from rolling due to crosswind or when turning.

QKR-IE-1442_4805234_ALL.indb 5–72 2017/09/27 13:34:59

https://truckmanualshub.com/

MAIN DATA AND SPECIFICATIONS OF ENGINE

Engine model	4JB1 MODEL ENGINE	4JB1-TC MODEL ENGINE	4JH1-TC MODEL ENGINE
Model and type	4JB1 diesel engine, four cycle, four cylinder, overhead valve, water cooled, direct injection	4JB1-TC diesel engine, four cycle, four cylinder, overhead valve, water cooled, direct injection, turbocharger with intercooler	4JH1-TC diesel engine, four cycle, four cylinder, overhead valve, water cooled, direct injection, turbocharger with intercooler
Compression ratio (to 1)	18.2 V 18.1	18.2	15.9
Piston displacement cc (cu.in.)	2,771 (169.1)	2,771 (169.1)	2,999 (183.0)
Firing order	1-3-4-2	1–3–4–2	1-3-4-2
Fan belt tension mm (in)	Refer to page 5-8	Refer to page 5-8	Refer to page 5-8
Idling speed r.p.m	775-825 V 725-775	775-825	675-725
Engine oil quantity [reference value] liters (US/Imp gal.)	When changing oil only: 6.4 (1.69/1.41) When changing oil and filter: 7.0 (1.85/1.54)	When changing oil only: 6.4 (1.69/1.41) When changing oil and filter: 7.0 (1.85/1.54)	When changing oil only: 6.0 (1.59/1.32) When changing oil and filter: 6.6 (1.74/1.45)
Engine coolant quantity [reference value] liters (US/Imp gal.)	10.1 (2.67/2.22)	10.1 (2.67/2.22)	11.3 (2.99/2.49)
Oil pan drain plug tightening torque N•m (kgf•m, lbf•ft)	83 (8.5, 61)	83 (8.5, 61)	83 (8.5, 61)

QKR-IE-1442_4805234_ALL.indb 6–1 2017/09/27 13:34:59

https://truckmanualshub.com/

MAIN DATA AND SPECIFICATIONS OF TRANSMISSION

Transmission type	JC520T9D	JC521T5H	MSB5S
TRANSMISSION			
Model and type	5-speed overdrive, synchromesh on all forward gear (with MT)	5-speed overdrive, synchromesh on all forward gear (with MT)	5-speed overdrive, synchromesh on all forward gear (with MT)
Oil capacity liters (US/Imp gal.)	2.7 (0.71/0.59)	2.7 (0.71/0.59)	2.7 (0.71/0.59)

QKR-IE-1442_4805234_ALL.indb 6–2 2017/09/27 13:35:00

https://truckmanualshub.com/

MAIN DATA AND SPECIFICATIONS ; QKR

Vehicle model	QKR55E	QKR55F	QKR55H
DIMENSIONS			
Wheelbase mm (in)	2,490 (98.0)	2,765 (108.9)	3,360 (132.3)
Tread: Front mm (in)	1,385 (54.5)	1,385 (54.5)	1,385 (54.5)
Rear mm (in)	1,395 (54.9)	1,425 (56.1)	1,425 (56.1)
Minimum ground clearance mm (in)	190 (7.5)	190 (7.5)	190 (7.5)
WEIGHTS			
Gross vehicle mass kg (lb)	4,100 (9,041)	5,200 (11,466)	5,200 (11,466)
Axle capacity: Front kg (lb)	RHD 2,500 (5,513) LHD 2,400 (5,292)	LHD 2,400 (5,292)	RHD 2,500 (5,513) LHD 2,400 (5,292)
Rear kg (lb)	2,500 (5,513)	3,500 (7,718)	3,500 (7,718)
ENGINE			
Model	4JB1 TRB 4JB1-TC	TRB 4JB1-TC	4JB1 TRB 4JB1-TC
Fuel tank capacity liters (US/Imp gal.)	75 (19.8/16.5)	100 (26.4/22.0)	100 (26.4/22.0)
CLUTCH			
Type	Hydraulic control, diaphragm spring, dry single plate	Hydraulic control, diaphragm spring, dry single plate	Hydraulic control, diaphragm spring, dry single plate
Pedal free play mm (in)	15 to 25 (0.59 to 0.98)	15 to 25 (0.59 to 0.98)	15 to 25 (0.59 to 0.98)
TRANSMISSION			
Manual transmission	JC520T9D	JC521T5H	JC521T5H
REAR AXLE			
Type	Spiral bevel pinion and hypoid gear	Spiral bevel pinion and hypoid gear	Spiral bevel pinion and hypoid gear
Oil capacity liters (US/Imp gal.)	Ø244 2.7 (0.71/0.59)	Ø292 3.0 (0.79/0.66)	Ø292 3.0 (0.79/0.66)

QKR-IE-1442_4805234_ALL.indb 6–3 2017/09/27 13:35:00

https://truckmanualshub.com/

MAIN DATA AND SPECIFICATIONS

Vehicle model	QKR55E	QKR55F	QKR55H
STEERING			
Type	Recirculating ball OPT Recirculating ball with power assisted	Recirculating ball OPT Recirculating ball with power assisted	Recirculating ball OPT Recirculating ball with power assisted
Steering wheel free play mm (in)	10 to 30 (0.39 to 1.18) OPT 10 to 50 (0.39 to 1.97)	10 to 30 (0.39 to 1.18) OPT 10 to 50 (0.39 to 1.97)	10 to 30 (0.39 to 1.18) OPT 10 to 50 (0.39 to 1.97)
Oil capacity liters (US/Imp gal.)	0.55 (0.15/0.12) OPT 1.6 (0.42/0.35)	0.55 (0.15/0.12) OPT 1.6 (0.42/0.35)	0.55 (0.15/0.12) OPT 1.6 (0.42/0.35)
SERVICE BRAKE			
Type	Hydraulic dual circuit with vacuum booster	Hydraulic dual circuit with vacuum booster	Hydraulic dual circuit with vacuum booster
Pedal free play mm (in)	4 to 7 (0.16 to 0.28)	4 to 7 (0.16 to 0.28)	4 to 7 (0.16 to 0.28)
PARKING BRAKE			
Type	Mechanical internal expanding at rear of transmission	Mechanical internal expanding at rear of transmission	Mechanical internal expanding at rear of transmission
Brake lever travel (when pulled with a 15 kgf (33 lbf, 147 N)) notches	6 to 8	6 to 8	6 to 8
SUSPENSION			
Type: Front	Semi-elliptical, alloy steel leaf spring with hydraulic double acting telescopic shock absorbers	Semi-elliptical, alloy steel leaf spring with hydraulic double acting telescopic shock absorbers	Semi-elliptical, alloy steel leaf spring with hydraulic double acting telescopic shock absorbers
Rear	Semi-elliptical, alloy steel leaf spring with hydraulic double acting telescopic shock absorbers	Semi-elliptical, alloy steel leaf spring with hydraulic double acting telescopic shock absorbers	Semi-elliptical, alloy steel leaf spring with hydraulic double acting telescopic shock absorbers
ELECTRICAL			
Type	12 volt system with negative polarity ground	12 volt system with negative polarity ground	12 volt system with negative polarity ground
Battery volt/amp. hr.	95D31R (12/80) OPT 130E41R (12/115)	95D31R (12/80) OPT 130E41R (12/115)	95D31R (12/80) OPT 130E41R (12/115)
Starter volt/kw	V 12/2.0 V 12/2.2	V 12/2.0 V 12/2.2	V 12/2.0 V 12/2.2
AC generator volt/amp. hr.	12/50	12/50	12/50

QKR-IE-1442_4805234_ALL.indb 6–4 2017/09/27 13:35:00

https://truckmanualshub.com/

Vehicle model	QKR77E	QKR77F	QKR77H
DIMENSIONS			
Wheelbase mm (in)	2,490 (98.0)	2,765 (108.9)	3,360 (132.3)
Tread: Front mm (in)	1,400 (55.1)	1,400 (55.1)	1,400 (55.1)
Rear mm (in)	1,395 (54.9)	1,425 (56.1)	1,425 (56.1)
Minimum ground clearance mm (in)	190 (7.5)	190 (7.5)	190 (7.5)
WEIGHTS			
Gross vehicle mass kg (lb)	4,100 (9,041) / 4,550 (10,033)	3,500 (7,718) / 5,200 (11,466)	5,200 (11,466)
Axle capacity: Front kg (lb)	2,500 (5,513)	2,400 (5,292)	2,400 (5,292)
Rear kg (lb)	3,600 (7,938)	3,500 (7,718)	3,500 (7,718)
ENGINE			
Model	TRB 4JH1-TC	TRB 4JH1-TC	TRB 4JH1-TC
Fuel tank capacity liters (US/Imp gal.)	75 (19.8/16.5)	100 (26.4/22.0)	100 (26.4/22.0)
CLUTCH			
Type	Hydraulic control, diaphragm spring, dry single plate	Hydraulic control, diaphragm spring, dry single plate	Hydraulic control, diaphragm spring, dry single plate
Pedal free play mm (in)	15 to 25 (0.59 to 0.98)	15 to 25 (0.59 to 0.98)	15 to 25 (0.59 to 0.98)
TRANSMISSION			
Manual transmission	MSB5S	MSB5S	MSB5S
REAR AXLE			
Type	Spiral bevel pinion and hypoid gear	Spiral bevel pinion and hypoid gear	Spiral bevel pinion and hypoid gear
Oil capacity liters (US/Imp gal.)	Ø244 2.7 (0.71/0.59)	Ø292 3.0 (0.79/0.66)	Ø292 3.0 (0.79/0.66)
STEERING			
Type	Recirculating ball OPT Recirculating ball with power assisted	Recirculating ball OPT Recirculating ball with power assisted	Recirculating ball OPT Recirculating ball with power assisted
Steering wheel free play mm (in)	10 to 30 (0.39 to 1.18) OPT 10 to 50 (0.39 to 1.97)	10 to 30 (0.39 to 1.18) OPT 10 to 50 (0.39 to 1.97)	10 to 30 (0.39 to 1.18) OPT 10 to 50 (0.39 to 1.97)
Oil capacity liters (US/Imp gal.)	0.54 (0.14/0.12) OPT 1.6 (0.42/0.35)	0.54 (0.14/0.12) OPT 1.6 (0.42/0.35)	0.54 (0.14/0.12) OPT 1.6 (0.42/0.35)

QKR-IE-1442_4805234_ALL.indb 6–5 2017/09/27 13:35:00

https://truckmanualshub.com/

Vehicle model	QKR77E	QKR77F	QKR77H
SERVICE BRAKE			
Type	Hydraulic dual circuit with vacuum booster	Hydraulic dual circuit with vacuum booster	Hydraulic dual circuit with vacuum booster
Pedal free play mm (in)	4 to 7 (0.16 to 0.28)	4 to 7 (0.16 to 0.28)	4 to 7 (0.16 to 0.28)
PARKING BRAKE			
Type	Mechanical internal expanding at rear of transmission	Mechanical internal expanding at rear of transmission	Mechanical internal expanding at rear of transmission
Brake lever travel (when pulled with a 15 kgf (33 lbf, 147 N)) notches	6 to 8	6 to 8	6 to 8
SUSPENSION			
Type: Front	Semi-elliptical, alloy steel leaf spring with hydraulic double acting telescopic shock absorbers	Semi-elliptical, alloy steel leaf spring with hydraulic double acting telescopic shock absorbers	Semi-elliptical, alloy steel leaf spring with hydraulic double acting telescopic shock absorbers
Rear	Semi-elliptical, alloy steel leaf spring with hydraulic double acting telescopic shock absorbers	Semi-elliptical, alloy steel leaf spring with hydraulic double acting telescopic shock absorbers	Semi-elliptical, alloy steel leaf spring with hydraulic double acting telescopic shock absorbers
ELECTRICAL			
Type	12 volt system with negative polarity ground	12 volt system with negative polarity ground	12 volt system with negative polarity ground
Battery volt/amp. hr.	80D26L	80D26L	80D26L
Starter volt/kw	12/2.0	12/2.0	12/2.0
AC generator volt/amp. hr.	12/60	12/60	12/60

QKR-IE-1442_4805234_ALL.indb 6–6 2017/09/27 13:35:00

https://truckmanualshub.com/

TIRE SIZE AND TIRE INFLATION PRESSURE

Vehicle model	Tire size		Tire inflation pressure kPa (kgf/cm², psi)	
	Front	Rear	Front	Rear
QKR55 (Single tire rear wheel model)	7.00R15-8PR	7.50R15-10PR	350 (3.50/50)	575 (5.75/85)
	7.00R15-8PR	7.50R15-12PR	350 (3.50/50)	650 (6.50/94)
	7.00R16-10PR	7.00R16-10PR	525 (5.25/75)	525 (5.25/75)
QKR55	7.00R15-8PR	7.00R15-8PR	450 (4.50/64)	450 (4.50/64)
	7.00R16-10PR 113/111M	7.00R16-10PR 113/111M	525 (5.25/75)	525 (5.25/75)
QKR77 (Single tire rear wheel model)	7.00R15-8PR	7.50R15-10PR	350 (3.50/50)	575 (5.75/85)
	7.00R15-8PR	7.50R15-12PR	350 (3.50/50)	650 (6.50/94)
	7.00R16-10PR	7.00R16-10PR	525 (5.25/75)	525 (5.25/75)
	7.00R16-10PR	7.50R16-12PR	525 (5.25/75)	650 (6.50/94)
	7.00R16-12PR	7.00R16-12PR	600 (6.00/87)	600 (6.00/87)
QKR77	7.00R15-8PR	7.00R15-8PR	450 (4.50/64)	450 (4.50/64)
	7.00R16-10PR	7.00R16-10PR	525 (5.25/75)	525 (5.25/75)

QKR-IE-1442_4805234_ALL.indb 6–7 2017/09/27 13:35:00

https://truckmanualshub.com/

- NOTE -

QKR-IE-1442_4805234_ALL.indb 6–8 2017/09/27 13:35:00

https://truckmanualshub.com/

INDEX

A

Accelerator pedal..... 2–23
Air cleaner 5–19
Antenna 2–38
Ash tray 2–21

B

Battery/Generator indicator light 2–11
BEFORE DRIVING..... 1–8
BEFORE DRIVING OFF..... 4–4
Bleeding of clutch hydraulic circuits .. 5–38
Bleeding of the brake hydraulic circuit..... 5–41
Bleeding of the fuel system..... 4–23
Brake and clutch fluid level 5–17
Brake and clutch fluid reservoir 2–28
Brake pedal 2–23
Brake pedal free play and allowance 5–19

C

Central locking door..... 2–20
Change indicator and push button..... 2–6
Changing differential oil 5–66
Changing engine oil..... 5–65
Changing power steering fluid 5–67
Changing transmission oil 5–66
Chassis number..... 1–1
Check engine indicator light..... 2–13
Checking and adding..... 5–12
Cigarette lighter..... 2–22
Cleaning inside cab 5–57
Cleaning of battery 5–47
Clutch pedal..... 2–23
Clutch pedal free play 5–18
Combination switch lever..... 2–16
Cornering light 2–17
CORRECT CARGO LOADING 1–2, 5–69
Cup holder 2–39

D

Digital clock 2–6
Dimmer switch 2–17
Dome light 2–24, 5–51
Door lock (Inside) 3–3
Door lock (Outside)..... 3–2
Door window..... 2–25
Draining of the water separator 4–25
DRIVER'S CHECK LIST (REGULAR INSPECTION)..... 3–10
Driver's seat..... 3–3
DRIVING FOR ECONOMY 4–11
DRIVING ON ICE OR SNOW..... 4–14
DRIVING PRECAUTIONS..... 4–7
Dual type fuel filter..... 5–32

E

Emergency starting..... 4–19
Emergency stop..... 4–18
Engine coolant..... 5–33
Engine coolant level..... 5–12
Engine cooling system..... 5–9
Engine inspection cover 2–31
Engine inspection sub cover..... 2–31
Engine number 1–1
Engine oil level..... 5–7
Engine overheating..... 4–16
Engine tachometer 2–7
Exhaust brake indicator light..... 2–10
Exhaust brake switch..... 2–19
External lights..... 2–35

F

Fan belt..... 5–8
FLOOR CONTROLS 2–22
Fog lights 5–49
Front combination lights..... 5–49
Front fog light switch 2–19
Fuel filter 5–26
Fuel gauge..... 2–8
Fuel indicator light..... 2–10
Fuel tank filler cap..... 2–29

https://truckmanualshub.com/

INDEX

Fuel tank filler cap with key..... 2–30
Fully adjustable steering wheel..... 2–15
Fuse and fusible link location..... 5–53
Fuse junction block..... 5–51
Fusible link..... 5–52

G

Glove box..... 2–24
Glow plug indicator light 2–12
Greasing points 5–68

H

Hazard warning flasher switch..... 2–20
Head lights..... 5–47
Heater-defroster..... 2–36
High beam indicator light..... 2–9

I

Idling control knob 2–20
IN CASE OF EMERGENCY 4–16
Indicator and warning lights..... 2–5
Inside door handle..... 3–2
Inside rearview mirror..... 3–9
INSTRUMENT CLUSTER 2–19

J

Jacking instruction and changing a flat tire 4–26

K

Key..... 3–1

L

Level of battery electrolyte 5–15
License plate light..... 5–50
Light control switch 2–16
Loading farming equipment..... 1–4
Loading methods..... 1–4, 5–71
LOCATION OF CHASSIS AND ENGINE NUMBER..... 1–1
LUBRICATION..... 5–58
LUBRICATION CHART..... 5–64
LUBRICATION GUIDE..... 5–65

M

MAIN DATA AND SPECIFICATIONS..... 6–3
MAIN DATA AND SPECIFICATIONS OF ENGINE 6–1
MAIN DATA AND SPECIFICATIONS OF TRANSMISSION..... 6–2
Main fuel filter 5–27
Main oil filter 5–24
MAINTENANCE 1–7
MAINTENANCE GUIDE..... 5–7
Maintenance operations 5–1
MAINTENANCE SCHEDULE..... 5–1
Maintenance schedule under severe driving conditions 5–6
Meter panel..... 2–3
METERS AND INDICATOR LIGHTS 2–3
Mirrors 3–9

O

Odometer and trip meter 2–6
Oil filter 5–24
Oil pressure indicator light 2–11
Oil viscosity chart for diesel engines 5–58
Oil viscosity chart for rear axle 5–59
Oil viscosity chart for transmission cases 5–58
Opening and closing left and right side gates 2–34
Opening and closing rear gate..... 2–34

https://truckmanualshub.com/

OPERATING PRECAUTIONS FOR TURBOCHARGED ENGINE..... 4–5
OPERATION AND CARE IN WINTER 4–13, 5–14
OPERATION AND CARE OF VEHICLE 1–7
OPERATION OF CONTROLS..... 3–1
OPERATION OF NEW VEHICLE 1–6
OTHERS..... 2–24
Outside door handle 3–2
Outside rearview mirrors..... 3–9

P

PARKING..... 4–6
Parking brake adjustment..... 5–43
Parking brake indicator and Brake fluid level indicator light..... 2–10
Parking brake lever..... 2–21
Parking brake lever travel 5–16
Partial-flow oil filter..... 5–25
Passing light switch 2–17
PERIODIC MAINTENANCE..... 5–19
Power steering fluid tank..... 2–28
Power window lock 2–26
Power window switch on the driver's door..... 2–25
Power window switch on the passenger door..... 2–26
Pre-fuel filter..... 5–30
PREPARATION FOR STARTING ENGINE 4–1
Preparing engine coolant..... 5–10

R

Radiator reserve tank 2–27
Rear body 2–34
Rear combination lights 5–50
Rear fog indicator light..... 2–9
Rear fog light 5–50
RECOMMENDED FLUIDS, LUBRICANTS AND DIESEL FUELS 5–60
REGULAR INSPECTION 5–7
Repacking the front and rear hub bearing with grease..... 5–68
Replacing light bulbs 5–47

S

Seat belt (2-points) 3–5
Seat belt (3-points) 3–7
Seat belt inspection and care 3–8
Seat belt warning light 2–14
Service brake adjustment..... 5–40
Spare wheel hanger 2–30
Specific gravity of battery electrolyte 5–46
Speedometer 2–6
Starter switch..... 2–15
STARTING ENGINE 4–2
STEERING COLUMN CONTROLS 2–14
Steering wheel..... 5–16
Steering wheel and horn button..... 2–14
STOPPING ENGINE 4–3
Stowage of jack and tools..... 4–16
Sun visor..... 2–24
SVS (Service Vehicle Soon) indicator light..... 2–13

T

Temperature gauge..... 2–7
Tilt cab 2–32
Tire air pressure plate..... 5–46
Tire inflation pressure 5–45
Tire rotation..... 5–45
TIRE SIZE AND TIRE INFLATION PRESSURE 6–7
TO AVOID DAMAGE TO THE VEHICLE 1–19
Towing 4–21
Transmission gearshift lever 2–22
Turn signal indicator lights 2–9
Turn signal switch 2–17

https://truckmanualshub.com/

INDEX

U

Underview mirror 3–10
Usage of the jack..... 4–28

V

Vehicle identification plate 1–2

W

Water separator indicator light..... 2–12
Wheel replacement..... 4–29
WHEN STOPPING / PARKING THE VEHICLE..... 1–17
WHEN THE VEHICLE RUNS 1–12
Windshield washer solution level..... 5–18
Windshield washer switch lever..... 2–18
Windshield washer tank..... 2–27
Windshield wiper switch lever..... 2–18

https://truckmanualshub.com/

QKR-IE-1442

You are requested to order this manual using the manual number that is shown above.

This manual is applicable for vehicles in all countries except USA and Canada.

All rights reserved. This manual may not be reproduced in whole or in part, without the permission in writing of ISUZU MOTORS LIMITED.

Issued by

ISUZU MOTORS LIMITED

Service Technical & Training Dept.
Shinagawa-ku, Tokyo, 140-8722 Japan

First edition August, 2015 181710-811K-x

https://truckmanualshub.com/