www.truckmanualshub.com/

STANDARD EQUIPMENT

ENGINE

- Engine, ISUZU AU-4LE2X engine with turbocharger and intercooler, Tier 4 Final certified
- Automatic engine deceleration
- Batteries (2 x12V - 64 Ah)
- Starting motor (24V - 3.2 kW), 50 A alternator
- Automatic engine shut-down for low engine oil pressure
- Double element air cleaner

CONTROL

- Working mode selector (H-mode, S-mode and ECO-mode)

SWING SYSTEM & TRAVEL SYSTEM

- Swing rebound prevention system
- Two-speed travel with automatic down shift
- Sealed & lubricated track links
- 23.6" {600mm} track shoes
- Grease-type track adjusters
- Automatic swing brake
- Dozer blade

MIRRORS & LIGHTS

- Four rear view mirrors
- Two front working lights (boom, guard)
- Swing flasher

CAB & CONTROL

- ROPS cab
- Two control levers, pilot-operated
- Horn, electric
- Integrated left-right slide-type control box
- Ashtray
- Cab light (interior)
- Coat hook
- Large cup holder
- Detachable two-piece floor mat
- 7-way adjustable suspension seat
- Retractable seatbelt
- Headrest
- Arm rest
- Handrails
- Heater and defroster
- Intermittent windshield wiper with double-spray washer
- Skylight
- Top guard
- Tinted safety glass
- Pull-type front window and removable lower front window
- Easy-to-read multi-display monitor
- Automatic air conditioner
- Emergency escape hammer
- Radio, AM/FM Stereo with speaker
- Travel alarm
- 12V converter
- Control pattern charger (2 way)

OPTIONAL EQUIPMENT

- Boom & arm load (lock) holding valve
- Front-guard protective structure (may interfere with bucket action)
- Additional hydraulic circuit
- Additional counterweight (+300 kg)
- Add-on type counterweight (+400 kg)
- Cab additional light
- Additional center track guide
- Rain visor (may interfere with bucket action)
- Belly pan guard
- N&B piping, N&B selector

Note: This catalog may contain attachments and optional equipment that are not available in your area. It may also contain photographs of machines with specifications that differ from those of machines sold in your area. Please consult your nearest KOBELCO distributor for those items you require.
Due to our policy of continuous product improvements all designs and specifications are subject to change without advance notice.
Copyright by **KOBELCO CONSTRUCTION MACHINERY CO., LTD.** No part of this catalog may be reproduced in any manner without notice.

KOBELCO CONSTRUCTION MACHINERY U.S.A. INC.
22350 Merchants Way
Katy, Texas 77449
T: 281-888-8430
F: 281-506-8713
www.KOBELCO-USA.com/

Inquiries To:

Bulletin No. SK75SR-NA-201
2013080000EF Printed in USA

KOBELCO

SK75SR-3E

Hydraulic Excavators

SK 75SR

- **Bucket Capacity :**
  0.29 cu.yd. (0.22 m³) SAE heaped
- **Engine Power :**
  55.0 hp (41kW) / 2,000 rpm
  (SAE NET)
- **Operating Weight :**
  17,100 lb (7,760 kg)

Complies with the latest exhaust emission regulations

US EPA Tier IV Final | EU (NRMM) Stage III B | Japanese Regulations

DRIVEN BY PASSION

https://truckmanualshub.com/

Fuel Consumption Gives You the Competitive Edge

KOBELCO's SR hydraulic excavator has undergone a new evolution.
By utilizing its full range of fuel-saving technologies in this SR model, we developed an unmatched low fuel consumption that provides a class leading standard of efficiency for engine-driven hydraulic excavators.

Outstanding performance in tight spaces, on-site safety, less stress for the operator ... KOBELCO was first to understand these demands and in response developed SR, short rear swing, excavators. The acclaimed SR concept went on to be adopted throughout the industry.
But KOBELCO didn't stop there. Aware of changing needs among machine users in a changing social environment, KOBELCO has taken the SR concept through a further evolution with value-added features.
KOBELCO's unique design for engine cooling, the iNDr system, cuts noise to extremely low levels.
The newest KOBELCO approach to low fuel consumption, NEXT-3E, now also applies to short rear swing models, to maximize work volumes while saving on fuel. And the new ECO-mode in the SK75SR creates even greater savings on fuel to turn SR models into exceptional high-earning machines.
KOBELCO continues to lead the field in short rear swing excavators.

Five Ways the SK75SR Scores:

- Low Noise: iNDr
- More Work with Less Fuel!
- Efficient Performance!
- Fast, Accurate and Low-Cost Maintenance
- A Working Environment that Helps Operator Concentrate on the Job

NEXT-3E

Pursuing the "Three E's"
The Perfection of Next-Generation, Network Performance

Enhancement
Greater Performance Capacity

Economy
Improved Cost Efficiency

Environment
Features That Go Easy on the Earth

The Revolutionary Integrated Noise and Dust Reduction Cooling System

iNDr

KOBELCO's exclusive iNDr Cooling System delivers amazingly quiet operation.

"Ultimate"-Low Noise Level of

iNDr Integrated Noise & Dust Reduction Cooling System

The iNDr revolution

● Concept
KOBELCO has developed the revolutionary integrated Noise and Dust Reduction Cooling System, with the engine compartment placed inside a single duct that connects the air intake to the exhaust outlet.

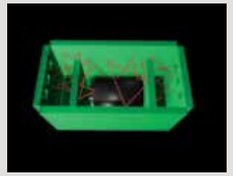

● Reduces Noise
The intake and exhaust are offset, with the holes and joints in the sections corresponding to the duct wall completely covered to reduce noise at the intake and exhaust apertures. This design, plus the generous use of insulation-material inside the duct, minimizes engine noise.

● Reduces Dust
The high-performance iNDr filter removes dust from the intake air, ensuring a quieter, cleaner engine and keeping the cooling unit free of clogging so that no regular cleaning is necessary.

https://truckmanualshub.com/

More Work with Less Fuel!

Fuel Consumption and Work Volume

The new hydraulic system and an additional ECO-mode have cut fuel consumption by up to 31%.

H-mode (vs previous SK70SR in H-mode)

Fuel consumption (L/h)

5% decrease

Work volume per liter of fuel (m^3/L)

11% increase

S-mode (vs previous SK70SR in H-mode)

Fuel consumption (L/h)

11% decrease

Work volume per liter of fuel (m^3/L)

16% increase

ECO-mode (vs previous SK70SR in S-mode)

Great leap forward in energy-saving performance

Fuel consumption (L/h)

31% decrease

Work volume per liter of fuel (m^3/L)

38% increase

* Figures for fuel consumption: fuel consumed per hour (L/h) compared with previous model, in KOBELCO tests.
* Figures for work volume: digging volume per liter of fuel (m^3/L) compared with previous model, in KOBELCO tests.

ECO-mode

Work modes for a closer match to the job in hand. An addition to the existing H-mode and S-mode, the new ECO-mode saves even more energy.

H-mode: For heavy duty operation, when a higher performance level is required.

S-mode: For normal operations with lower fuel consumption.

ECO-mode: Puts priority on low fuel consumption and economic performance.

Significant Extension of Continuous Operating Hours

The combination of a large-capacity fuel tank and excellent fuel efficiency delivers an impressive increase in the length of continuous usage.

Fuel tank capacity:

31.7 U.S.gal (120 L)

NEXT-3E Technology
New Hydraulic System

KOBELCO's hydraulic circuit analysis is combined with the use of new, high-efficiency pumps in a three-pump electro-hydraulic actuator control system that replaces the conventional mechanical system. It all adds up to a hydraulic system that delivers maximum efficiencey: Class leading work performance on less fuel.

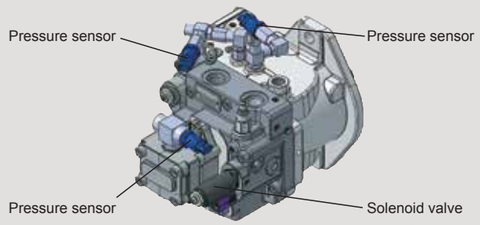

Photos in this catalog are the machine with optional equipment. Please check with your dealer for price and availability.

NEXT-3E Technology
Total Tuning Through Advanced ITCS Control

The next-generation engine control is governed by a new version of ITCS, which responds quickly to sudden changes in hydraulic load to ensure that the engine runs as efficiently as possible with a minimum of wasted output.

ITCS (Intelligent Total Control System) is an advanced, computerized system that provides comprehensive control of all machine functions.

NEXT-3E Technology
Next-Generation Electronic Engine Control

The new electronic-control common-rail engine features high-pressure fuel injection and multiple injection with improved precision. It is fitted with an EGR cooler, and DOC which deliver high output from optimized combustion and greatly reduce PM and NOx emissions.

Tier4 compliant engine

PM emissions cut: Limits creation of particulate matter (which results from incomplete combustion of fuel)

■ Common rail system

High-pressure injection atomizes the fuel, and injection timing is more precise, improving combustion efficiency.

■ DOC (Diesel Oxidation Catalyst)

Carbon builds up as soot on the diesel particulate filter and is burned off at high temperature. No Exhaust fluid required. The system allows manual or automatic filter regeneration.

NOx emissions cut: Reduces nitrogen oxides (created by reaction with oxygen at high temperature)

■ EGR cooler

While ensuring sufficient oxygen for combustion, cooled exhaust gases are mixed with the air intake and re-circulated into the engine. The lowered oxygen temperature lowers the combustion temperature and increases combustion efficiency.

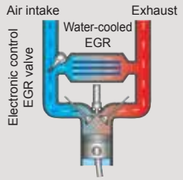

Automatic Acceleration / Deceleration Function Reduces Engine Speed

Engine speed is automatically reduced when the control lever is placed in neutral, effectively saving fuel and reducing noise and exhaust emissions. The engine quickly returns to the previous speed when the lever is moved out of neutral.

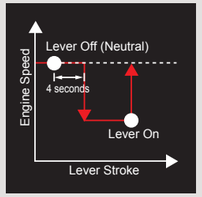

https://truckmanualshub.com/

Efficient Performance!

Top-Class Powerful Digging

For more efficient work performance.
(SAE J1179:1990)

Max. arm crowding force: **7,700 lbs {34.2 kN}**

Max. bucket digging force: **14,658 lbs {65.2 kN}**

Powerful Travel

A new type of travel motor boosts travel torque by 6%, and lighter machine weight improves steering performance by 10% over the previous model, for better maneuverability and crisper turns.

Travel torque: **6% increase**

Drawbar pulling force: **17,300 lbs {76.8 kN}**

Dozer Simultaneous Operations

With separate pumps for travel motor and dozer there is no hydraulic interference when traveling at top speed. Dozer operation is fast, rugged, and stress-free.

N&B Hosing

Nibbler & Breaker specs are fitted optionally. The selector valve, located inside the right side cover, can be accessed from the ground. Hydraulic flow to attachments is controlled from the cab.

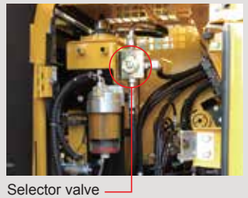

Selector valve

Attachment selector switch

Excellent Working Ranges

Greater working ranges with class-topping vertical digging depth.

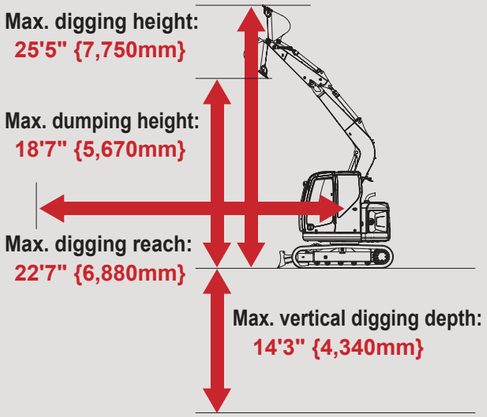

Great Swing Power, Short Cycle Times

Powerful swing power and top-class swing speed.

Swing speed: **11.5 rpm**

Requires 11 ft. 2 in. of Working Space

The compact design allows the machine to perform continuous dig, 180° swing and dump operations within a working space of 11 feet 2 inches.

Working radius equals the sum of the minimum front swing radius and tail swing radius. When the add-on type counterweight (+400 kg) is installed, the values of tail overhang and tail swing radius are increased.

Mild Operating Sound

The iNDr cooling system also helps to keep the machine quiet, even at close quarters.

Meets EMC(Electromagnetic Compatibility) Standards in Europe

Electrical shielding ensured that the machines clear all European standards and neither cause or are affected by electromagnetic interference.

https://truckmanualshub.com/

A Working Environment that Helps the Operator Concentrate on the Job at Hand!

Big Cab

The “Big cab” provides a roomy operating space with plenty of legroom, and the door opens wide for entry and exit. As well as giving a wide, open view to the front, the cab has increased window areas on both sides and to the rear, for improved visibility in all directions.

Excellent Visibility

Taking out the right-side cab support to make a single window has improved visibility to the right.

Wide-Access Cab Aids Smooth Entry and Exit

Easy entry and exit assured with wider cab entry and safety lock lever integrated with mounting for control levers.

Comfortable Operating Environment

● Double slide seat

● Reclining seat

● Powerful automatic air conditioner

● Two-speaker FM/AM radio with station select

● One-touch lock release simplifies opening and closing front window

● Travel speed select switch
The travel speed select switch is placed on the dozer lever and it allows selecting the travel speed.

● Spacious luggage tray

● Large cup holder

Always Easy to Read! New Information Display

Large gauges with large numbers and letters combined with glare-reducing visors ensure that the display is always easy to read regardless of working conditions.

ROPS Cab

The newly developed, ROPS (Roll-Over-Protective Structure)-compliant cab clears ISO standards (ISO-12117-2: 2008) and ensures greater safety for the operator.

● Level 2 FOPS Guard (ISO 10262) is equipped as standard.
● To fit vandalism guards, please contact your KOBELCO dealer.
(Mounting brackets for vandalism guards provided standard)

● FOPS guard
(Meets or exceeds current OHSA standards)

Safety Features

● Protective panel separates the pump compartment from the engine

● Retractable seatbelt requires no manual adjustment

● Swing flasher

● Hammer for emergency exit

● Handrails meet European standards
● Thermal guard prevents contact with hot components during engine inspections
● Travel alarm

https://truckmanualshub.com/

Fast, Accurate and Low-Cost Maintenance

Comfortable "On the Ground" Maintenance

All of components that require regular maintenance are laid out for easy access with the control valves located on a single right-hand panel that opens and closes at a touch. In the pump compartment, there is remote access to such components as the engine oil filter and fuel filter (with built-in water separator). On the left side are the iNDr filter, air cleaner, radiator coolant, etc. Daily maintenance can be carried out easily without the need to climb up to the machine.

●Easy access to cooling units
Left side

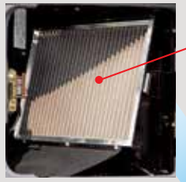

iNDr filter

●Easy access to engine
Center

Radiator reservoir tank

Double element air cleaner

●Easy access to pump & filters
Right side

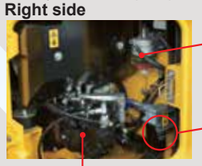

Large fuel filter
(with built-in waterseparator)

Engine oil filter

Hydraulic pump

Tool box

●Easy access to
main control valves

N&B selector

Control pattern changer

Fast Maintenance

●Fuel tank equipped with bottom flange and large drain valve.

●Hour meter can be checked while standing on the ground.

●Easy-access fuse box. More finely differentiated fuses make it easier to locate malfunctions.

Easy Cleaning

●Detachable two-pieace floor mat with handles for easy removal. A floor drain located under floor mat

●Internal and external air conditioner filters can be easily removed without tools for cleaning

●Special crawler frame designed is easily cleaned of mud

Total Support for Machines with Network Speed and Accuracy

Our "KOMEX" allows you to use the Internet to manage information from your office for machines operating in all areas.
Be prepared for any problems with strategic information and cost management.
This provides a wide range of support for your business operations.

Direct Access to Operational Status

- ●Location Data
- ●Operating Hours
- ●Fuel Consumption Data
- ●Graph of Work Content
- ●Graph of Machine Duty Cycles

Maintenance Data and Warning Alerts

- ●Machine Maintenance Data

Security System

- ●Engine Start Alarm
- ●Area Alarm

iNDr Means Easy Maintenance

iNDr Filter Blocks Out Dust

Outside air goes directly from the intake duct through the iNDr filter for dust removal. The filter features a 60-mesh screen, which means it has sixty holes per inch both vertically and horizontally, with a wide front surface area and accordion structure that resists clogging.

Visual Checking and Easy Cleaning

When checking and cleaning the cooling system, one must deal with several cooling components like the radiator, oil cooler and intercooler, which all must be handled in different ways. But with the iNDr filter, there's just one filter in one place. If it looks dirty during start-up inspection, it can be cleaned easily and quickly.

Long-Interval Maintenance

Long-life hydraulic oil reduces cost and labor.

Super-fine Filter(Hydraulic oil filter)

High-performance, super-fine filter has a 1,000 hour replacement cycle.

Double-Element Air Cleaner

The high-performance air cleaner has twice the capacity and service life of previous air cleaners and is installed behind the iNDr filter for even more effective cleaning performance.

Monitor Display with Essential Information for Accurate Maintenance Checks

- ■Displays only the maintenance information that's needed, when it's needed.
- ■Self-diagnostic function that provides early-warning detection and display of electrical system malfunctions.
- ■Record function of previous technical issues including irregular and transient malfunction.

Choice of 16 Languages for Monitoring Display

With messages including those requiring urgent action displayed in the local language, users in all parts of the world can work with greater peace of mind.

https://truckmanualshub.com/

Engine

Model	ISUZU AU-4LE2X
Type:	Direct injection, water-cooled, 4-cycle diesel engine With turbocharger, intercooler US EPA Tier IV Final, and act on regulation, etc. of emission from non-road special motor vehicles (Japan))
No. of cylinders:	4
Bore and stroke:	3.35' (85 mm) × 3.78'(96 mm)
Displacement:	133 cu.in. (2.179 L)
Rated power output:	55.0hp {41kW} /2,000rpm (SAE NET)
Max. torque:	148 lb-ft {210N·m} /1,800rpm (SAE NET)

Hydraulic System

Pump	
Type:	Two variable displacement pumps
Max. discharge flow:	2 × 17.5 U.S.gph {2 x 66 L/min} , 1 × 12.2 U.S.gph {1 x 46 L/min}
Relief valve setting	
Boom, arm and bucket:	4,260 psi {29.4 MPa}
Travel circuit:	4,260 psi {29.4 MPa}
Dozar circuit:	2,610 psi {18.0 MPa}
Swing circuit:	3,550 psi {24.5 MPa}
Control circuit:	730 psi {5.0 MPa}
Pilot control pump:	Gear type
Main control valves:	12-spool
Oil cooler:	Air cooled type

Swing System

Swing motor:	Axial piston motor
Parking brake:	Oil disc brake, hydraulic operated automatically
Swing speed:	11.5 rpm
Swing torgue:	12,500 lb·ft {17 kN·m} (SAE)
Tail swing radius:	4'3" {1,290 mm}
Min. front swing radius:	6'11" {2,110 mm}

Travel System

Travel motors:	2 x axial piston, two-speed motors
Parking brakes:	Oil disc brake per motor
Travel shoes:	39 each side
Travel speed:	3.3 / 1.6 mph {5.3 / 2.6 km/h}
Drawbar pulling force:	17,300 lbs {76.8 kN} (SAE J 1309)
Gradeability:	70 % {35°}

Cab & Control

Cab
All-weather, sound-suppressed steel cab mounted on the silicon-sealed viscous mounts and equipped with a heavy, insulated floor mat.
Control
Two hand levers and two foot pedals for travel
Two hand levers for excavating and swing
Electric rotary-type engine throttle

Boom, Arm & Bucket

Boom cylinder:	4.33" {110 mm} x 3'0" {916 mm}
Arm cylinder:	3.74" {95 mm} x 2'8" {833 mm}
Bucket cylinder:	3.15" {80 mm} x 2'5" {735 mm}

Dozer Blade

Dozer cylinder:	5.31" {135 mm} x 5.08"{129 mm}
Dimension:	8'1" {2,470 mm} x 1'6" {455 mm}
Working range:	1'2" {360 mm} (up) x 10.0" {250 mm} (down)

Refilling Capacities & Lubrications

Fuel tank:	31.7 U.S.gal {120 L}
Cooling system:	2.25 U.S.gal {8.5 L}
Engine oil:	2.9 U.S.gal {11 L}
Travel reduction gear:	2 × 0.36 U.S.gal {2 × 1.35 L}
Swing reduction gear:	0.4 U.S.gal {1.5 L}
Hydraulic oil tank:	9.5 U.S.gal {36 L} tank oil level 22.5 U.S.gal {85 L} hydraulic system

Attachments

Backhoe bucket and arm combination

Use			Backhoe bucket					
			Normal digging					
Bucket capacity	SAE heaped	cu.yd.{m³}	0.14 {0.11}	0.18 {0.14}	0.23 {0.18}	0.29 {0.22}	0.37 {0.28}	0.46 {0.35}
	Struck	cu.yd.{m³}	0.11 {0.09}	0.16 {0.12}	0.18 {0.14}	0.24 {0.18}	0.27 {0.21}	0.34 {0.26}
Opening width	With side cutter	inches {mm}	-	19 {480}	22 {550}	26 {650}	30 {750}	33 {850}
	Without side cutter	inches {mm}	16 {400}	16 {410}	19 {480}	23 {580}	27 {680}	31 {780}
No. of bucket teeth			3	3	3	4	4	4
Bucket weight		lbs {kg}	330 {150}	350{160}	370{170}	420{190}	460{210}	460{210}
Combinations	5'7" {1.71 m} arm		○	○	○	○	◎	△
	7'0" {2.13 m} arm		○	○	○	◎	△	—

◎ Standard ○ Recommended △ Loading only

Working Ranges

Unit: ft-in{m}

Boom / Arm / Range	12'6" {3.82 m}	
	5'7"{1.71m}	7'0" {2.13 m}
a- Max. digging reach	21'3" {6.48}	22'7" {6.88}
b- Max. digging reach at ground level	20'10" {6.35}	22'2" {6.76}
c- Max. digging depth	13'8" {4.16}	15'0" {4.58}
d- Max. digging height	24'4" {7.41}	25'5" {7.75}
e- Max. dumping clearance	17'6" {5.34}	18'7" {5.67}
f - Min. dumping clearance	8'1" {2.46}	7'2" {2.19}
g- Max. vertical wall digging depth	12'8" {3.87}	14'3" {4.34}
h- Min. swing radius	5'7" {1.71}	6'11" {2.11}
i - Horizontal digging stroke at ground level	9'3" {2.83}	10'6" {3.21}
j - Digging depth for 8 feet flat bottom	12'7" {2.38}	14'2" {4.31}
Bucket capacity SAE heaped cu.yd.{m³}	0.37 {0.28}	0.29 {0.22}

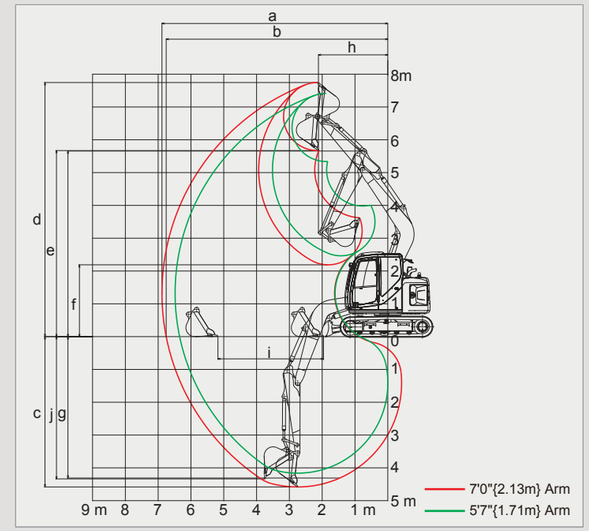

Digging Force

Unit: lbs {kN}

Arm length		5'7" {1.71 m}	7'0"{2.13m}
Bucket digging force	SAE	14,658 {65.2}	14,658 {65.2}
	ISO	16,456 {73.2}	16,456 {73.2}
Arm crowding force	SAE	8,500 {37.7}	7,700 {34.2}
	ISO	8,900 {39.4}	7,900 {35.2}

Dimensions

Arm length		5'7"{1.71m}	7'0"{2.13m}
A	Overall length	19'2" {5,830}	20'10" {6,360} **
B	Overall height (to top of boom)	8'3" {2,520}	8'3" {2,520}
C	Overall width of crawler	8'0" {2,450}	
D	Overall height (to top of cab)	8'6" {2,600}	
E	Ground clearance of rear end*	27.6" {700}	
F	Ground clearance*	13.8" {350}	

Unit: ft-in{mm}

G	Tail swing radius	4'3" {1,290} (4'8" {1,420}***)
H	Tumbler distance	7'3" {2,210}
I	Overall length of crawler	9'3" {2,830}
J	Track gauge	6'1" {1,850}
K	Shoe width	23.6" {600}
L	Overall width of upperstructure	7'5" {2,250}
M	Dozer blade (up/down)	1'2" {360} /10.0" {250}

* Without including height of shoe lug
**Dozar blade ; Rear side
***With add-on type counterweight (+400kg)

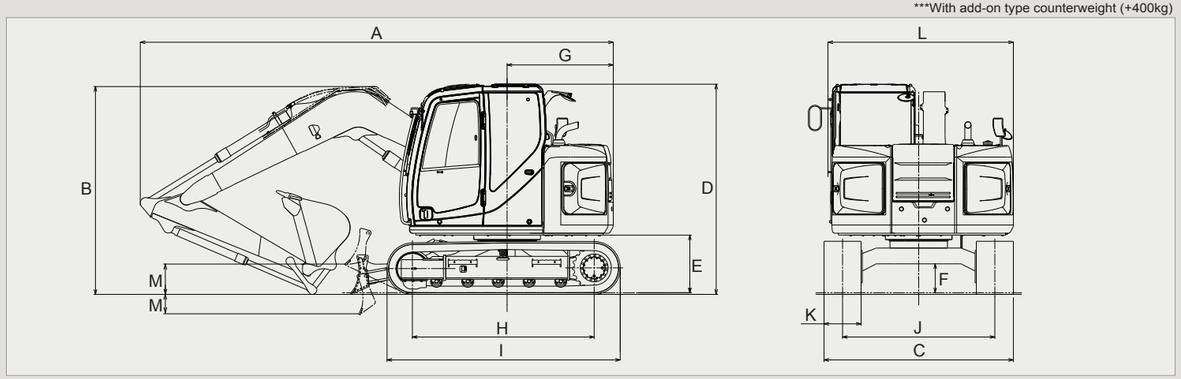

Operating Weight & Ground Pressure

In standard trim, with standard boom, 7'0" {2.13m} arm, and 0.29 cu.yd. {0.22m³} SAE heaped bucket

Shaped		Triple grouser shoes (even height)
Shoe width	ft-in {mm}	23.6" {600}
Overall width of crawler	ft-in {mm}	8'0" {2,450}
Ground pressure	psi {kPa}	3.81 {26.3}
Operating weight	lbs {kg}	17,100 {7,760}

https://truckmanualshub.com/

Offset Boom Specifications

Working Ranges

Unit: ft-in{m}

Boom	Offset Boom Specification					
Arm	5'9"{1.76 m}			6'9"{2.06 m}		
Offset	Max. Left	Center	Max. Right	Max. Left	Center	Max. Right
a- Max. digging reach	20'1"{6,110}	21'3"{6,480}	19'0"{5,780}	21'0"{6,390}	22'2"{6,750}	19'10"{6,050}
b- Max. digging reach at ground level	19'7"{5,970}	20'10"{6,340}	18'5"{5,620}	20'6"{6,250}	21'9"{6,620}	19'4"{5,900}
c- Max. digging depth	12'11"{3,940}	14'1"{4,300}	11'10"{3,600}	13'11"{4,240}	15'1"{4,600}	12'10"{3,900}
d- Max. digging height	23'7"{7,180}	24'7"{7,500}	22'7"{6,880}	24'4"{7,410}	25'4"{7,730}	23'4"{7,110}
e- Max. dumping clearance	16'9"{5,110}	17'10"{5,430}	15'9"{4,810}	17'6"{5,340}	18'3"{5,560}	16'4"{5,040}
f - Min. dumping clearance	7'0"{2,130}	8'0"{2,450}	6'0"{1,830}	6'1"{1,850}	7'1"{2,170}	5'1"{1,550}
g- Max. vertical wall digging depth	9'11"{3,020}	11'1"{3,370}	8'10"{2,700}	11'0"{3,360}	12'2"{3,710}	10'0"{3,040}
h- Min. swing radius	4'8"{1,420}	4'0"{1,220}	6'8"{2,040}	4'9"{1,440}	4'4"{1,320}	6'8"{2,040}
i - Horizontal digging stroke at ground level	10'2"{3,100}	10'1"{3,080}	10'2"{3,110}	11'10"{3,610}	11'9"{3,590}	11'11"{3,640}
j - Digging depth for 8 feet flat bottom	11'8"{3,550}	12'10"{3,920}	10'6"{3,210}	12'9"{3,890}	14'0"{4,260}	11'8"{3,550}
Bucket capacity SAE heaped cu.yd.{m³}	0.37{0.28}			0.29{0.22}		

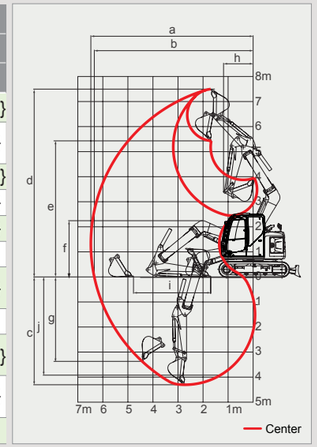

Dimensions

Unit: ft-in{mm}

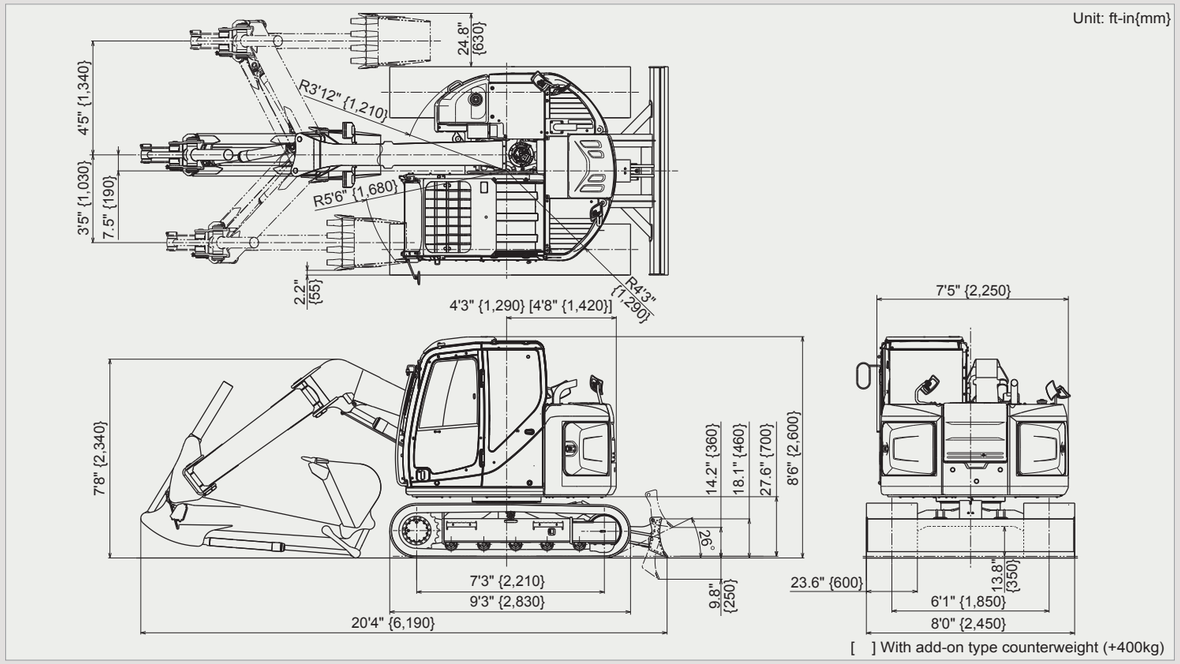

[ ] With add-on type counterweight (+400kg)

Operating Weight & Ground Pressure

In standard trim, with standard boom, 6'9" {2.06m} arm, and 0.29 cu.yd. {0.22m³} SAE heaped bucket

Shaped		Triple grouser shoes (even height)
Shoe width	ft-in {mm}	23.6" {600}
Overall width of crawler	ft-in {mm}	8'0" {2,450}
Ground pressure	psi {kPa}	4.22 {29.1}
Operating weight	lbs {kg}	19,070 {8,650}*

*With additional counterweight (+300kg)

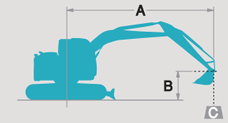

Rating over front

Rating over side or 360 degrees

A – Reach from swing centerline for bucket hook
B – Bucket hook height above/below ground
C – Lifting capacities in pounds

SK75SR-3E Arm: 5'7" {1.71m} Bucket: 0.37cu.yd. {0.28m³} SAE heaped 460 lbs {210kg} Counterweight 1,760 lbs {800kg} Shoe: 23.6" {600mm} Dozer : blade down

A / B	5'{1.5m}		10'{3.0m}		15'{4.6m}		At Max. Reach		Radius
20' {6.1m} lb{kg}							*3,680{1,660}	*3,680{1,660}	9'0"{2.74m}
15' {4.6m} lb{kg}			*4,500{2,040}	*4,500{2,040}			*3,030{1,370}	2,930{1,320}	14'7"{4.46m}
10' {3.0m} lb{kg}	*9,910{4,490}	*9,910{4,490}	*5,540{2,510}	5,500{2,490}	*4,210{1,900}	2,700{1,220}	*3,030{1,370}	2,070{930}	17'2"{5.25m}
5' {1.5m} lb{kg}			*7,090{3,210}	4,790{2,170}	*4,640{2,100}	2,480{1,120}	*3,360{1,520}	1,780{800}	18'1"{5.52m}
G.L. lb{kg}			*7,460{3,380}	4,370{1,980}	*4,740{2,150}	2,310{1,040}	*3,850{1,740}	1,790{810}	17'7"{5.36m}
-5' {-1.5m} lb{kg}	*8,800{3,990}	*8,800{3,990}	*6,330{2,870}	4,310{1,950}	*3,950{1,790}	2,270{1,020}	*3,740{1,690}	2,180{980}	15'5"{4.71m}
-10' {-3.0m} lb{kg}			*3,290{1,490}	*3,290{1,490}			*2,920{1,320}	*2,920{1,320}	10'10"{3.31m}

SK75SR-3E Arm: 7'0" {2.13m} Bucket: 0.29cu.yd. {0.22m³} SAE heaped 420 lbs {190kg} Counterweight 1,760 lbs {800kg} Shoe: 23.6" {600mm} Dozer : blade down

A / B	5'{1.5m}		10'{3.0m}		15'{4.6m}		At Max. Reach		Radius
20' {6.1m} lb{kg}			*3,880{1,750}	*3,880{1,750}			*3,180{1,440}	*3,180{1,440}	11'6"{3.51m}
15' {4.6m} lb{kg}					*3,560{1,610}	2,860{1,290}	*2,700{1,220}	2,410{1,090}	16'3"{4.97m}
10' {3.0m} lb{kg}			*4,920{2,230}	*4,920{2,230}	*3,890{1,760}	2,730{1,230}	*2,670{1,210}	1,780{800}	18'8"{5.69m}
5' {1.5m} lb{kg}			*6,620{3,000}	4,880{2,210}	*4,410{2,000}	2,480{1,120}	*2,890{1,310}	1,540{690}	19'5"{5.94m}
G.L. lb{kg}			*7,400{3,350}	4,330{1,960}	*4,680{2,120}	2,270{1,020}	*3,460{1,560}	1,530{690}	18'11"{5.78m}
-5' {-1.5m} lb{kg}	*7,490{3,390}	*7,490{3,390}	*6,680{3,020}	4,180{1,890}	*4,230{1,910}	2,180{980}	*3,420{1,550}	1,800{810}	17'0"{5.19m}
-10' {-3.0m} lb{kg}	*6,650{3,010}	*6,650{3,010}	*4,320{1,950}	*4,320{1,950}			*2,990{1,350}	2,850{1,290}	13'0"{3.97m}

SK75SR-3E Offset Boom Arm: 5'9"{1.76 m} Bucket: 0.37cu.yd. {0.28m³} SAE heaped 460 lbs {210kg} Counterweight ; 2,430 lbs {1,100kg} Shoe: 23.6" {600mm} Dozer : blade up

A / B	5'{1.5m}		10'{3.0m}		15'{4.6m}		At Max. Reach		Radius
20' {6.1m} lb{kg}							*4,660{2,110}	*4,660{2,110}	9'2"{2.79m}
15' {4.6m} lb{kg}			*4,590{2,080}	*4,590{2,080}			3,720{1,680}	3,140{1,420}	14'9"{4.50m}
10' {3.0m} lb{kg}	*10,040{4,550}	*10,040{4,550}	*5,640{2,550}	*5,640{2,550}	3,430{1,550}	2,880{1,300}	2,560{1,160}	2,140{970}	17'4"{5.28m}
5' {1.5m} lb{kg}			6,140{2,780}	4,960{2,240}	3,070{1,390}	2,540{1,150}	2,150{970}	1,760{790}	18'2"{5.55m}
G.L. lb{kg}	*3,860{1,750}	*3,860{1,750}	5,380{2,440}	4,260{1,930}	2,770{1,250}	2,250{1,020}	2,110{950}	1,710{770}	17'8"{5.38m}
-5' {-1.5m} lb{kg}	*8,090{3,660}	*8,090{3,660}	5,240{2,370}	4,130{1,870}	2,690{1,220}	2,170{980}	2,540{1,150}	2,060{930}	15'6"{4.74m}
-10' {-3.0m} lb{kg}	*5,220{2,360}	*5,220{2,360}	*3,780{1,710}	*3,780{1,710}			*3,380{1,530}	*3,380{1,530}	11'0"{3.35m}

SK75SR-3E Offset Boom Arm: 6'9"{2.06 m} Bucket: 0.29cu.yd. {0.22m³} SAE heaped 420lbs {190kg} Counterweight ; 2,430 lbs {1,100kg} Shoe: 23.6" {600mm} Dozer : blade up

A / B	5'{1.5m}		10'{3.0m}		15'{4.6m}		At Max. Reach		Radius
20' {6.1m} lb{kg}			*4,340{1,960}	*4,340{1,960}			*3,940{1,780}	*3,940{1,780}	10'11"{3.34m}
15' {4.6m} lb{kg}			*4,160{,1880}	*4,160{,1880}	3,730{1,690}	3,170{1,430}	3,290{1,490}	2,780{1,260}	15'11"{4.85m}
10' {3.0m} lb{kg}	*5,430{2,460}	*5,430{2,460}	*5,250{2,380}	*5,250{2,380}	3,530{1,600}	2,980{1,350}	2,350{1,060}	1,960{880}	18'3"{5.58m}
5' {1.5m} lb{kg}			6,350{2,880}	5,150{2,330}	3,150{1,420}	2,610{1,180}	1,990{900}	1,630{730}	19'2"{5.84m}
G.L. lb{kg}	*3,880{1,750}	*3,880{1,750}	5,460{2,470}	4,330{1,960}	2,810{1,270}	2,290{1,030}	1,940{870}	1,580{710}	18'7"{5.68m}
-5' {-1.5m} lb{kg}	*7,250{3,280}	*7,250{3,280}	5,210{2,360}	4,110{1,860}	2,670{1,210}	2,160{970}	2,270{1,020}	1,840{830}	16'8"{5.08m}
-10' {-3.0m} lb{kg}	*6,880{3,120}	*6,880{3,120}	*4,540{2,050}	4,310{1,950}			*3,460{1,560}	3,020{1,360}	12'6"{3.81m}

Notes:

1. Do not attempt to lift or hold any load that is greater than these lift capacities at their specified lift point radius and heights. Weight of all accessories must be deducted from the above lift capacities.
2. Lift capacities are based on machine standing on level, firm, and uniform ground. User must make allowance for job conditions such as soft or uneven ground, out of level conditions, side loads, sudden stopping of loads, hazardous conditions, experience of personnel, etc.
3. Bucket lift hook is defined as lift point.
4. The above rated loads are in compliance with SAE Hydraulic Excavator Lift Capacity Rating Standard J 1097. They do not exceed 87% of hydraulic lifting capacity or 75% of tipping load. Rated loads marked with asterisk (*) are limited by hydraulic capacity rather than tipping load.
5. Operator should be fully acquainted with the Operator's and Maintenance Instructions before operating this machine. Rules for safe operation of equipment should be adhered to at all times.
6. Lift capacities apply to only machines as originally manufactured and normally equipped by KOBELCO CONSTRUCTION MACHINERY CO., LTD.