https://truckmanualshub.com/

S276 1:2018

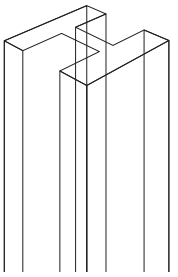

1.6–1.8t

Electric Narrow Aisle
Reach Truck

OPERATION & SERVICE MANUAL

HELI 安徽合力股份有限公司
ANHUI HELI CO., LTD.

FOREWORD

The G series 1.6-1.8t electric narrow aisle reach truck is new offering of HELI to meet market needs. The new series is designed on the base of the advantages of some reach trucks made by domestic and foreign manufacturers. It has modern designed appearance, simple structure, comfortable operation, and superior maneuvering performance. It is mainly used for goods handling and stacking indoor with narrow aisle such as factory, warehouse, supermarket and so on.

The series truck has streamline appearance and ergonomic designed cab; AC type lifting, travelling and steering control systems are applied on the truck; three phase AC type motors are assembled on the truck; the operator has wide view with three stage full free high lifting mast; EPS electric powered steering system makes steering easy; electromagnetic brake of the front wheel and energy regenerating technology of AC motors effectively reduce noise and improve truck comfort and reliability; the truck has precise and stable operation through superior motor, battery, multi function LCD meter and DC-DC pressure converter; buffers at the upper and lower limit position and during mast lifting and lowering effectively reduce working noise and realize stable moving; with CAN bus technology, the truck is more reliable; lifting height display and pre-selector are optional. The truck has the characteristics of good performance, easy operation, flexible steering, reliable brake, good power, low noise and no pollution and so on.

This manual states the trucks' specification, operation, maintenance, service, main assemblies' constructions and working principles so as to help operators to use the truck correctly and attain the highest function. It is necessary to read over the manual before operating the trucks.

The rules and notices in the manual should be abided seriously by all of the relative people to enable these trucks in optimized working state for long period and bring the highest efficiency.

The graphic illustrations such as pictures, drawings and parts characters and so on in the manual are not in real proportion because of the limit of space, so you can not get the size and weight accurately from the graphic illustrations which are to describe the correct operation methods of the devices and parts.

This manual might not correspond with the actual condition because of the improving of our products. Our products are subject to improvements and changes without notice.

https://truckmanualshub.com/

CONTENTS

I. Safety Instructions of Operation and Driving……..1

II. External View of Reach Truck……5

III. Main Specifications……6

IV. Construction and Principle of Reach Truck……7

4.1 Transmission system……..7

4.2 Rear axle……..……9

4.3 Steering system…….……...……11

4.4 Supporting wheel assembly…….……..12

4.5 Brake system ……..……14

4.6 Hydraulic system…….……...….17

4.7 Body system……..……29

4.8 Lifting system…….……31

4.9 Electric system……...……53

V. Troubleshooting……..93

5.1 Transmission system……93

5.2 Steering system…….93

5.3 Parking brake system……93

5.4 Hydraulic system……..94

5.5 Electric system……95

VI. Maintenance……96

VII. Others……99

7.1 The size and weight of the main takedown parts of the truck……..99

7.2 Mast disassembly……. 99

7.3 Overhead guard disassembly……99

7.4 Vibration specification……...100

I. Safety Instructions of Operation and Driving

1. Drivers and equipment keepers should keep “safety first” in mind and operate according to the operation and service manual.

2. Transporting

Pay attention to the following instructions before transporting the forklift with containers or trucks:

2.1 Take the working device backward, turn off the battery and pull the parking brake;

2.2 Hang up the forklift according to the decal. It is not allowed to hang the mast or get into or out the truck directly by platform.

2.3 Fix the overhead guard and mast with wire and wedge wheels securely when delivering the forklift.

3. Storage

3.1 Lower the forks to the floor;

3.2 Turn off the key switch and emergency switch, place all operating levers in neutral and pull out the plug from the battery set.

3.3 Pull the parking brake;

3.4 Put up the wheels and recharge the battery once every month when the forklift is lying by for a long time.

4. Preparations for start

4.1 Read the manual carefully to get familiar with the meters, operating levers, construction and functions of the forklift before driving. Please see figure 1. The drivers must have license.

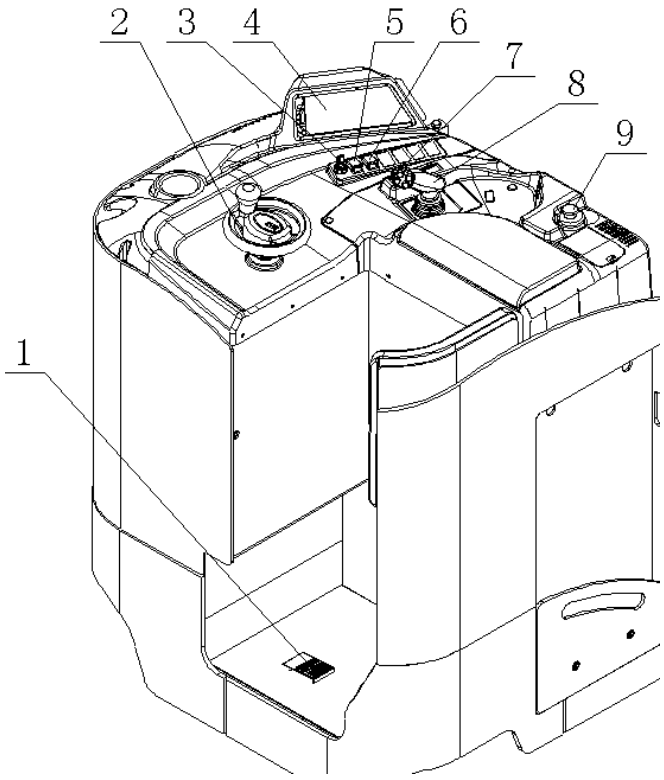

Figure 1-1 Layout of instrument and operating mechanism of standard model
1. Brake pedal (pedal safety switch) 2. Steering wheel 3. Key switch
4. Display instrument 5.6. Automatic centering switch 7. Front lamp
8. Integrated knob 9. Emergency button

4.2 Check all the instruments for normal function;

4.3 Check the polyurethane solid tyre;

4.4 Check all operating switches and pedals;

4.5 Check the battery for output voltage, specific gravity and state of battery capacity;

4.6 Check all of the connectors and plugs in the electric system for reliable contact and accelerator pedal for effectiveness and flexibility;

4.7 Check hydraulic oil, electrolyte and brake fluid for leakage;

4.8 Check main fixing parts for tightness;

4.9 Make the trial of the mast for lifting, lowering, forward and backward tilting and the truck for steering and braking.

5 Precaution in driving

5.1 Do not grasp the steering wheel when getting on the truck.

5.2 Pay attention to the state of mechanical, electrical, hydraulic system and MOSFET speed adjuster.

5.3 Turn on the key switch and pull up the emergency switch, then push forward or pull backward integrated knob to keep proper acceleration.

5.4 Read the electric energy on the meter and charge the battery or change a full one when the capacity of the battery is less than one LED.

5.5 Do not over load. Insert the forks to pallet correctly and do not hand off-center loads.

5.6 Starting, steering, driving, braking and stopping should go well. Slow down when steering.

5.7 Do not stand under the fork and on the fork when lifting the fork.

5.8 Do not operate the levers or attachment out of the seat. Do not stand on the telescopic working device in case of danger of mis-operating the telescopic levers.

5.9 Tilt the mast forward or backward completely or ensure the operating levers back to neutral position when the mast is at the highest position.

5.10 When releasing operating levers suddenly during mast lowering, the mast will act after a short time.

5.11 When travelling with load, tilt the mast backward, retract the working device and keep the load as low as possible. Do not travel or steer when lifting the mast.

5.12 When driving, be careful of the passersby, obstacles and rough road, and make sure there is enough clearance between the mast and the entrance.

5.13 Do not brake suddenly.

5.14 Before leaving the forklift truck, lower the fork fully, place levers in neutral, turn off the battery and pull the hand brake.

5.15 Do not adjust the pressure of the control valve and safety valve which has been adjusted well in our company as will.

5.16 Check the chain regularly.

5.17 According to the measurement method specified in JB/T3300, the maximize noise at the outboard of the truck should be no more than 75dB (A).

6. Charging

6.1 Obey the stipulations strictly in operation instruction for battery when first charging or recharging.

6.2 if the output voltage of the battery is reduced to 41V /31V, or the voltage of anyone lower than 1.7V or the meter alarms, the truck should stop working immediately until the battery is replaced or charged.

6.3 When charging, often check specific gravity, liquid leveL and temperature of the electrolyte.

6.4 Charge the battery as soon as possible (in 24 hours) after working. Do not undercharge or overcharge in case of a damage to the battery.

6.5 Please refer to the battery operation and service manual for charging method and maintenance.

II. External View of Reach Truck

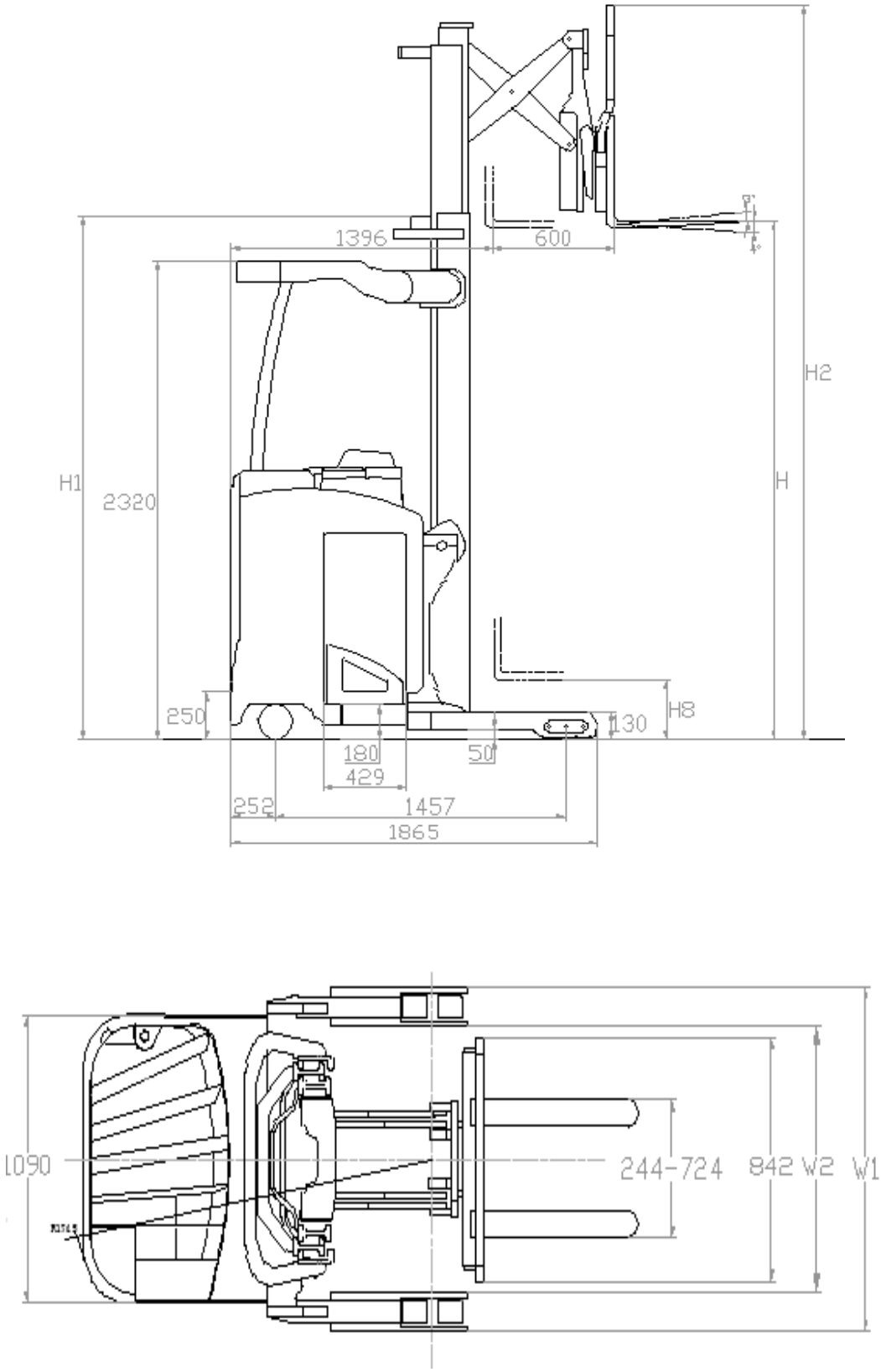

Figure 2-1 External view of reach truck

III. Main Specifications

Characteristic	Model		CQD16X1	CQD18X1
			GB2R	GB2R
	Driving type		Stand-on type	Stand-on type
	Battery voltage/capacity	V/Ah	36/775,48/500	36/930,48/560
	Battery weight	kg	800	940
	Parking brake		Electromagnetic brake	
Wheels	Tyre type		Polyurethane	
	Load wheel	mm	Φ127x99	Φ127x99
	Drive wheel	mm	Φ330x140	Φ330x140
	Auxiliary wheel	mm	Φ178x76	Φ178x76
Dimensions	Standard lifting height	mm	5330	5330
	Mast height, lowered	mm	2526	2526
	Tilting angle(Fwd/Bwd)	º	3/4	3/4
	Fork length/width/thickness	mm	920x100x35	920x100x35
	fork side shift amount	mm	±50	±50
	Truck length (without fork)	mm	1815	1865
	Truck width	mm	1090	1090
	Overhead height	mm	2320	2320
	Min.underground clearance (at mast)	mm	60	60
	Front overhang	mm	318	318
	Reaching forward distance	mm	600	600
	Wheel base	mm	1407	1457
	Min. steering radius	mm	1695	1745
	Right angle stacking width	mm	2817	2832
Performance	Travelling speed, w/o load	km/h	11.8/10.5	11.8/10.5
	Lifting speed, w/o load	m/s	0.51/0.33	0.51/0.33
	Lowering speed, w/o load	m/s	0.5/0.5	0.5/0.5
	Front reaching speed, w/o load	m/s	0.15/0.11	0.15/0.11
	Rated capacity	kg	1600	1750
	Load center	mm	600	500
	Max. gradeability, w/o load	%	15/10	15/10
Motors	Driving motor power	kw	7	7
	lifting motor power	kw	15	15
	Steering motor power	kw	0.6	0.6

IV. Construction and Principle of Reach Truck

4.1 Transmission system

4.1.1 Working principle

The drive unit of the truck is compact and reasonable arranged. Please see table 1 for its main performance parameters and figure 4-1-1 for structure. The working principle is that the output shaft of the motor is connected with drive gear through spline housing, positioned through spline and fixed through retainer ring. First level deceleration is achieved through gear mesh transmission of the drive gear and driven gear and the second level deceleration is achieved through gear mesh transmission of the input shaft and spiral bevel tooth. The power is transmitted to output shaft after a 90℃hanging of transmitting direction and thus the drive wheel rotates. The steering mode of the whole drive unit is of electric steering. That is a meshed gear pair is driven by steering motor. The steering mode is simple and easy.

Table 1

Item	Parameters
Transmission box type	Stepless transmission
Speed ratio of forward gear	22.6
Speed ratio of reversing gear	22.6
Drive wheel specification (diameter×width)）	φ330×140
Oil type	80W/90GL-5
Oil adding quantity	About 3.6L
Total weight (motor and drive wheel not included)	178Kg

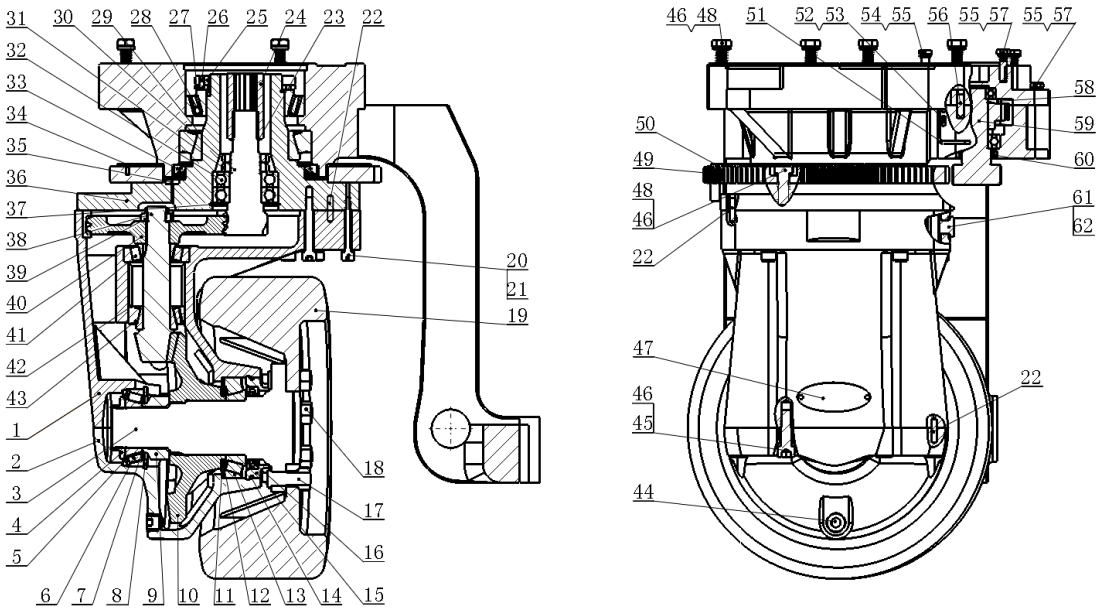

Figure 4-1-1 Drive unit

1. Support of transmission box case	2. Transmission box case cover	3. Drive axle
4. lock nut	5. oil retainer	6. bearing 30209
7. washer	8. retainer ring	9. spacer
10.spiral bevel gear	11. washer	12. retainer ring
13. bearing 30212	14. O ring	15. oil seal holder
16. oil seal	17. hub bolt	18. hub nut
19. tyre 330×114	20.screw M10×60	21. washer 10
22. pin B6×26	23. retainer ring 28	24. Spline housing
25. lock nut	26. screw M6×14	27. lock ring
28. bearing 32017	29. bearing 32019	30. drive gear shaft
31. nut M33×1.5	32. bearing 6207	33. oil seal
34. screw M4×12	35. breather plug	36. tank cover
37. retainer ring 72	38. input shaft	39. lock nut
40. driven gear	41. bearing 30306	42. washer
43. bearing 33206	44. plug 1/2'	45. screw
46. washer 12	47. transmission box plate	48. bolt M6×12
49.steering gear	50. induction ring	51. proximity switch bracket
52. bolt B8×26	53. washer 6	54. bolt M8×70
55. washer 8	56. pin B8×26	57. Bolt M8×30
58. input assembly	59. input shaft assembly	60. oil seal
61. combined washer 16	62. oil addling plug	

4.1.2 Disassembling of steering motor

Remove three M8 screws on the steering motor; remove the steering motor from the steering gear box, at this time, there is steering drive gear and shaft sleeve on the

motor shaft. Loose the M10 screw at the end of motor and remove the washer 10, retainer ring, drive gear and shaft sleeve successively.

4.1.3 Disassembling of diving motor

Remove the four M12 bolts on the drive motor; remove the drive motor from the gear box.

4.2 Rear axle

4.2.1 Working principle

The rear axle is installed on frame through pin at point 1. The rear axle supports the transmission system and meanwhile, it can reduce the ground pressure of drive wheel according to the operating surface condition and prevent the drive wheel from idling.

As a part of rear axle, the balance wheel will rotate with the travelling direction of truck when steering. The steering knuckle shaft of balance wheel is connected to the steering connecting plate through two tapered roller bearings. See figure 4-2-1.

When the rear part of the truck is under upwarp condition, install the spring between steering connecting plate and frame. When the truck is under horizontal condition, the spring is under compress state. And part of the truck weight is applied on the steering connecting plate which is transmitted to the balance wheel. Thus the pressure on the drive wheel is reduced and truck is ensured to contact with ground with four wheels even on uneven ground.

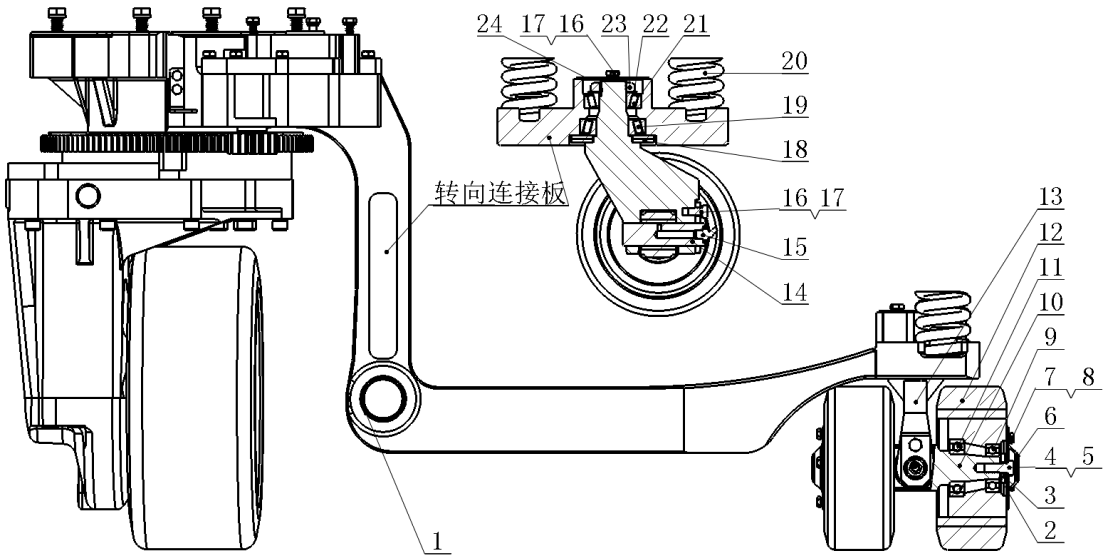

Figure 4-2-1 Rear axle structure

1. bearing	2. adjusting shim	3. block
4. Bolt	5. washer 10	6. guard plate
7. bolt M6x12	8. washer 6	9. bearing 6205-2RS
10. steering shaft	11. bearing 6206-2RS	12. balance wheel
13. steering knuckle	14. steering pin axle	15. lubrication grease fitting
16. bolt M8x16	17. washer 8	18. washer 1
19. bearing 30207	20. spring	21. bearing 30206
22. washer 30	23. nut M30x1.5	24. Steering cover plate

4.3 Steering system

Steering system type	Steering through drive wheel
Steering motor	48V 0.6kw 1350rpm
Deceleration ratio of steering gear box	1:46
Deceleration ration of gear transmission	1:5.85
Control type	AC
Steering wheel diameter	φ200mm

The steering system consists of a steering wheel assembly, a electric steering controller, a steering motor, a steering reduction mechanism and so on. The principle of the system is below. Angle sensor will send the signal received from the turning of the hand wheel to steering controller. And then the control voltage which is gotten by

the processing of the controller will be put on the two sides of the motor through the duty ratio of the PWM signal. Through the steering gear deceleration and chain drive deceleration, the steering wheel will turn a stated angle. The angle degrees with 78 °in forward and 102 ° in backward will be controlled by the proximity switch on the steering gearbox. The angle will be feedback and it will be shown on the meter.

4.3.1 Steering wheel assembly

Steering wheel assembly (see fig. 4-3-1) consists of a steering wheel, a steering bracket, a bearing, a sensor and so on. The function is that it generates a signal of angle and it doesn't overcome the force moment of turning, so the turning is easy. The install position has a 85° degree with the vertical direction. It can not be adjusted after installment.

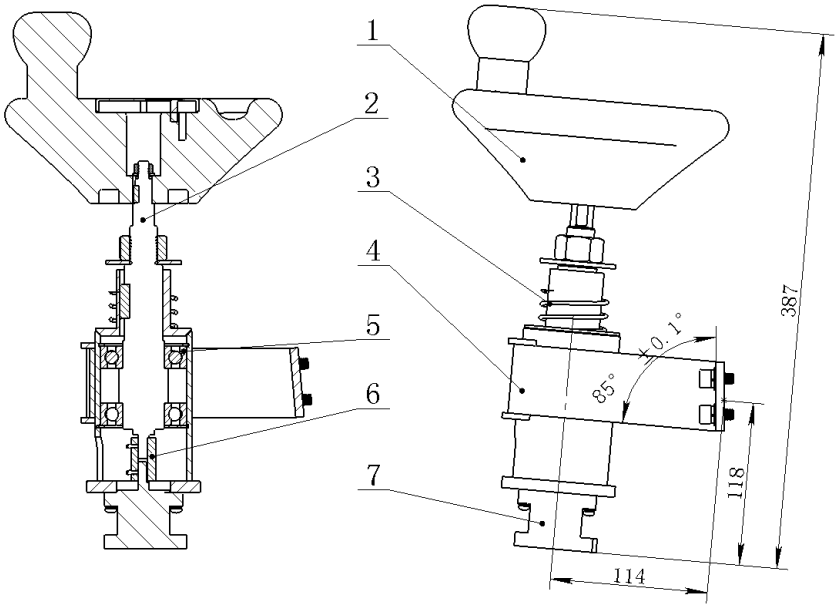

Figure 4-3-1 Steering wheel assembly

1. steering wheel 2. steering axle 3. spring 4. Steering bracket assembly

5. bearing 6002-RS 6. elastic coupling 7. steering angle sensor

4.3.2 Steering deceleration mechanism

The steering deceleration mechanism (figure 4-3-2) realizes the deceleration of steering motor. The speed ratio of a pair of meshed gear in the steering gear box is 1:1.

The output gear on the output shaft of gear box meshes with steering gear and the speed ratio is 1:5.85.

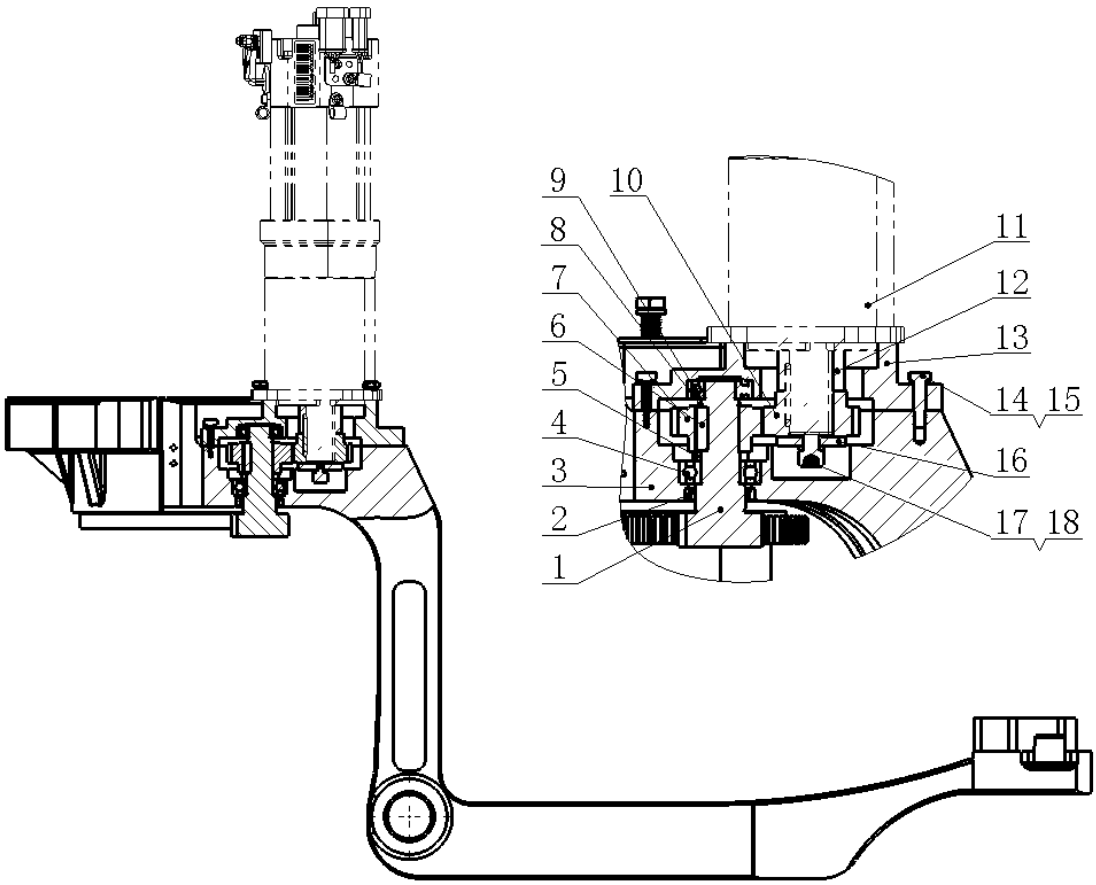

Figure 4-3-2 Steering deceleration mechanism

1.output gear	2. oil seal	3. steering connecting plate
4. bearing 6004-2Z	5. shaft sleeve	6. flat key
7. driven gear	8. retainer ring 24	9. bearing 6004-2Z
10. drive gear	11. steering motor	12. shaft sleeve
13. transmission box case cover	14. bolt M8x30	15.washer 8
16. retainer ring	17. screw M10x30	18. washer 10

4.4 Supporting wheel assembly

The truck adopts four points supporting structure and the front support is two symmetrically distributed front load wheel assembly. (See figure 4-4-1).

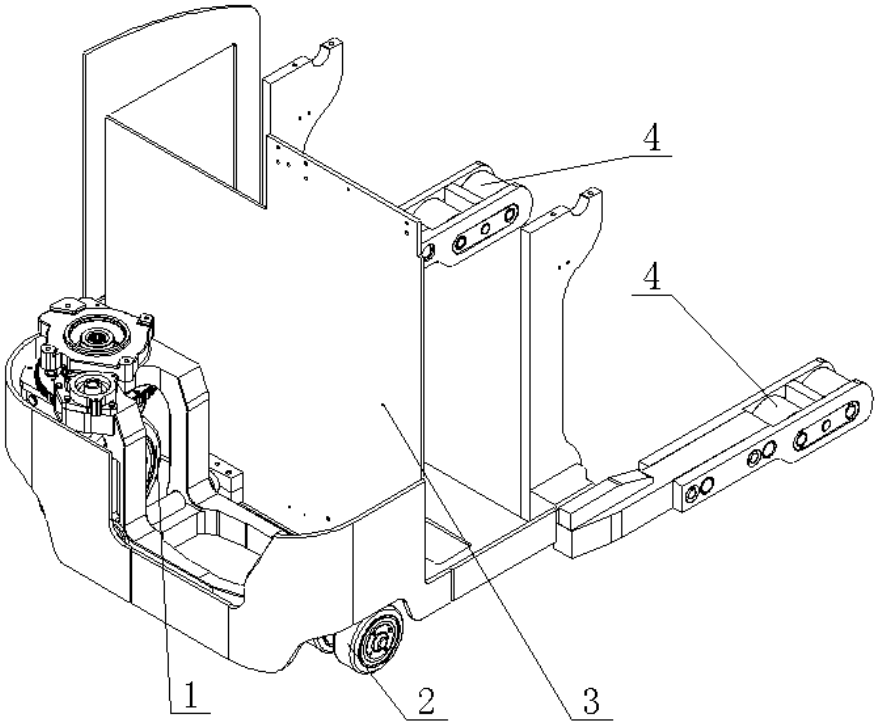

Figure 4-4-1 Diagram of four supporting points

1. Drive wheel 2. Auxiliary wheel 3. Frame 4. Front load wheel assembly

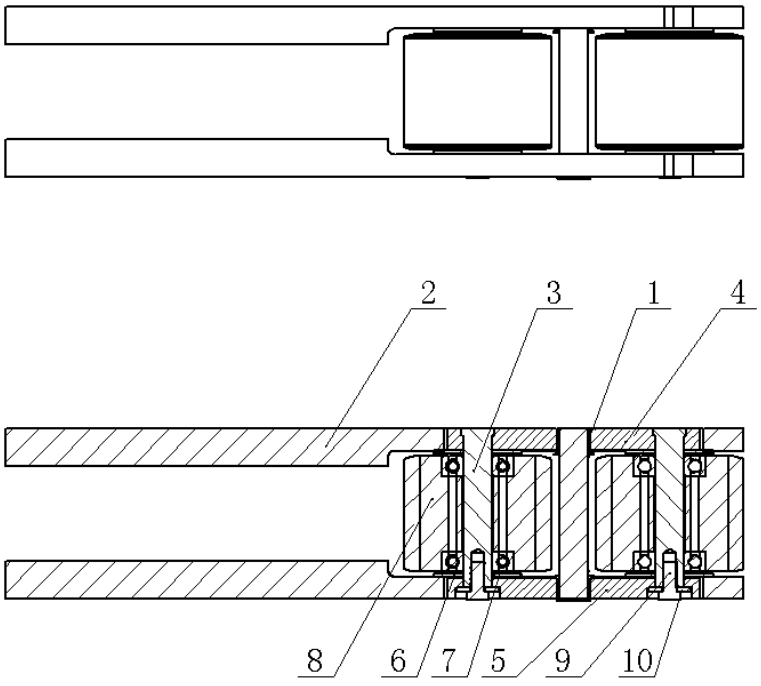

Figure 4-4-2 front load wheel assembly

1. Flange bearing 2. Front leg assembly 3. Pin axle 4. Side plate 1

5. Side plate 2 6. Shim 7. Adjusting shim 8. Load wheel

9. Bolt M12x1.25x25 10. Washer 12

The load wheel assembly (see figure 4-4-2) is mainly made up of 2 bearings, front leg assembly, pin axle, side plate 1, side plate 2, shims, 2 load wheels, bolt M12x1.25x25 and washers. Before assembly, apply sufficient grease between 2 load wheels and change regularly (every 2 month).

4.5 Brake system

4.5.1 Service brake

The truck adopts AC regenerating brake of AC traction motor. There are two ways to start service brake: one is to release driving operation knob which has weak brake strength and it is suitable for ordinary condition; the other way is t release brake pedal which has strong brake strength and it is suitable for emergent condition. (see figure 4-5-1).

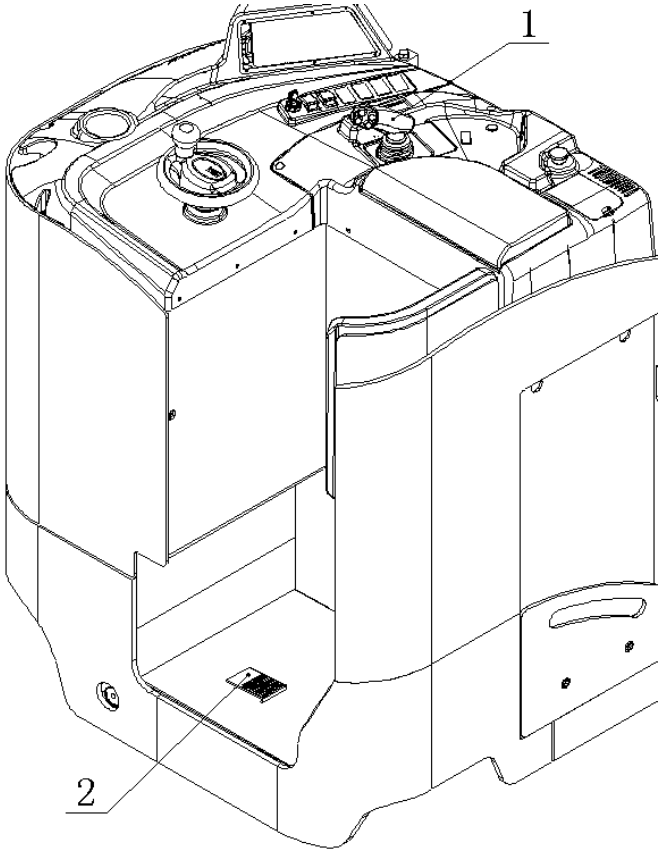

Figure 4-5-1 Service brake

1. Operation knob 2. Brake pedal

4.5.2 Parking brake

Electromagnetic parking brake which is on the top of the shaft end cover of the AC type traction motor is applied on the truck (see figure 4-5-2). The friction disc is together with motor shaft. When the key is OFF or the emergency switch is pressed, the truck has no power, then the electromagnetic parking brake‘s electromagnet has no power. The armature presses the friction disc tightly, the brake hold the traction motor shaft tightly and then the motor shaft can not rotate and thus the truck is parking braked.

When travelling, the electromagnetic parking brake should release the friction disc. Release the parking brake and the brake condition shown on the LCD is released. Then the truck can be started.

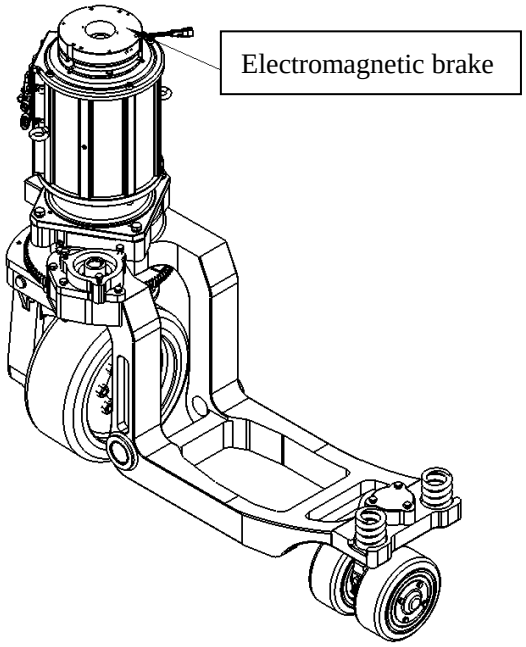

Figure 4-5-2 Diagram of driving unit

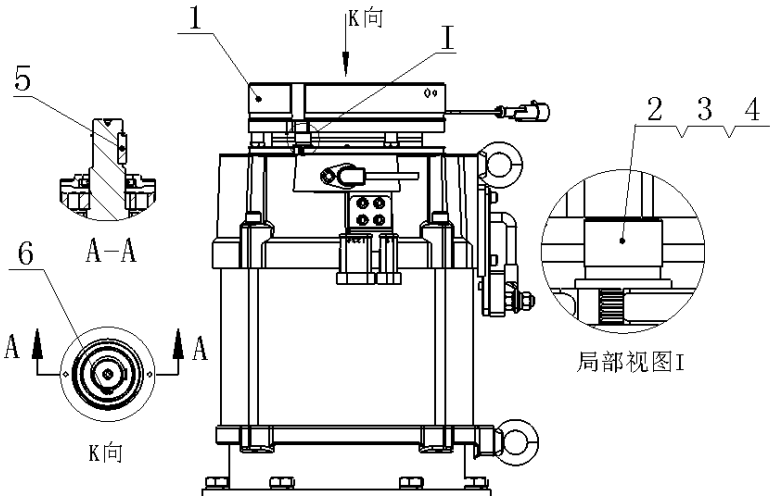

Figure 4-5-3 Installment diagram of electromagnetic parking brake

1. Electromagnetic parking brake 2. Socket head cap screw 3. Elastic washer 8
4. Shim 8 5. Flat key 6. Retainer ring 25

See figure 4-5-2 and figure 4-5-3 for electromagnetic parking brake installment.

(1) Fix the electromagnetic parking brake (item 1) onto the top of the shaft end cover of the traction motor with 3 socket head cap screws M8x16 (item 2). The tighten torque of the screw is 25Nm and apply anaerobic adhesive GY-340.

(2) Fix the friction disc built-in spine sleeve of the electromagnetic parking brake with travelling and traction motor shaft through key 8x25 (item 1). Fix the spine sleeve upper end with retainer 25 (item 6).

Make sure all parts are firmly installed and be sure they can work smoothly.

Notes when assembling electromagnetic parking brake

Make sure the air gap between the basis of the electromagnet and the amature is 0.3mm. Thus electromagnetic brake can brake reliably when getting electricity and released reliably when power off.

Please see figure 4-5-4 for electromagnetic brake installment dimensions.

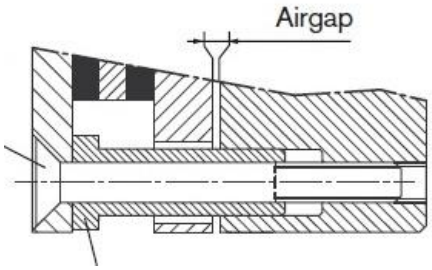

Figure 4-3-8 Rated airgap diagram

4.6 Hydraulic system

Hydraulic pump	Model	TMG1A18
	Type	Gear pump
	Nominal displacement	18ml/r
	Rated pressure	20.6 MPa
	Highest pressure	22.6 MPa
	Oil temperature	-20℃～100℃
	Applicable oil	Hydraulic oil（mineral oil），viscosity ： 9～430mm2/s
	Suction pressure	-0.02～0.1MPa
Control valve（full proportion）	Model	Q69K7-30201
	Function	full proportion control
		Front and rear reach with balance valve
		Tilting self lock valve
		With manual lowering function
	System pressure	21MPa
Control valve（single proportion ）	Model	Q69K7-30211
	Function	Lifting and decline proportion control
		Front and rear reach with balance valve
		Tilting self lock valve
		With manual lowering function
	System pressure	21MPa
Front lifting cylinder	Type	Plunger type
	Piston rod diameter	65mm
	Additional function	Pipe bursting protection, end buffering
	Travel distance	892-1340mm
Rear lifting cylinder	Type	Plunger type
	Piston rod diameter	45mm
	Additional function	Pipe bursting protection, end buffering when lowering
	Travel distance	1615～2465mm
Telescopic cylinder	Type	Double action piston type
	Piston rod diameter	28mm
	Cylinder bore	45mm
	Travel distance	112mm
Tilting cylinder	Type	Double action piston type
	Piston rod diameter	40mm
	Cylinder bore	75mm
	Travel distance	38mm
Side shifting cylinder	Type	Plunger type
	Piston rod diameter	40mm
	Travel distance	50mm in left and right respectively

The hydraulic system is made up of hydraulic oil tank, hydraulic oil pump,

control valve, front lifting cylinder, rear lifting cylinder, front reach cylinder, tilting cylinder, side shifting cylinder, pipelines and so on. See figure 4-6-1 and 4-6-2 for principle diagram.

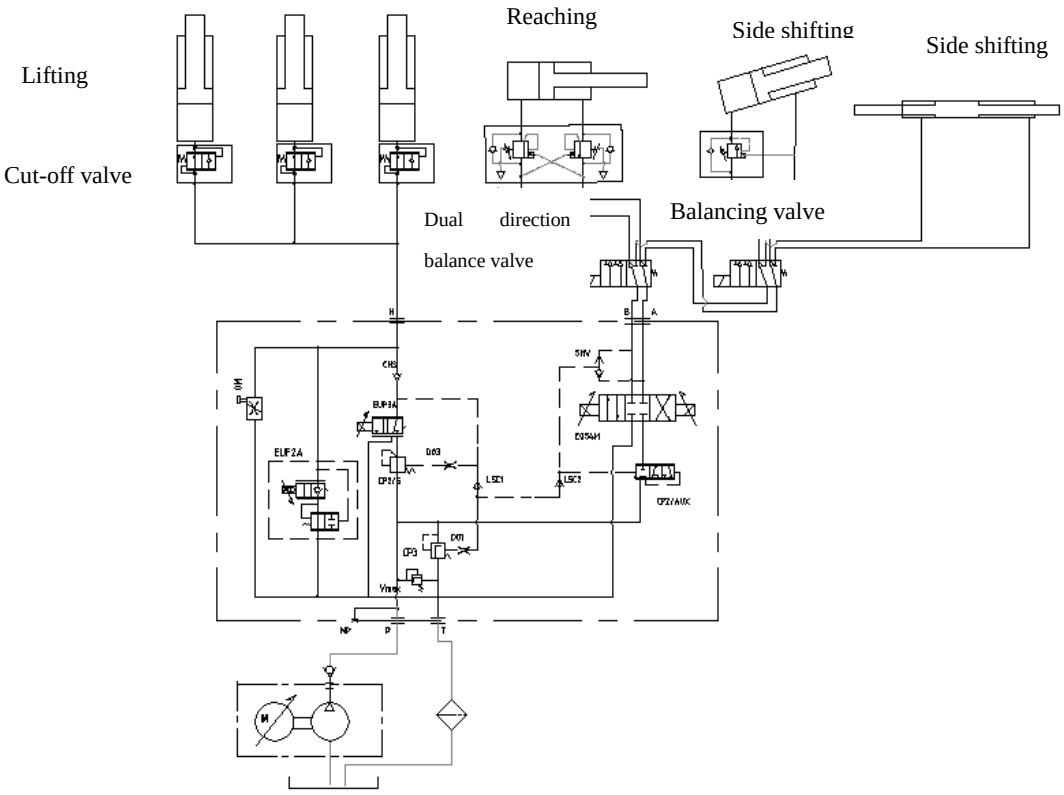

Figure 4-6-1 Comfort type (full proportion) hydraulic principle diagram

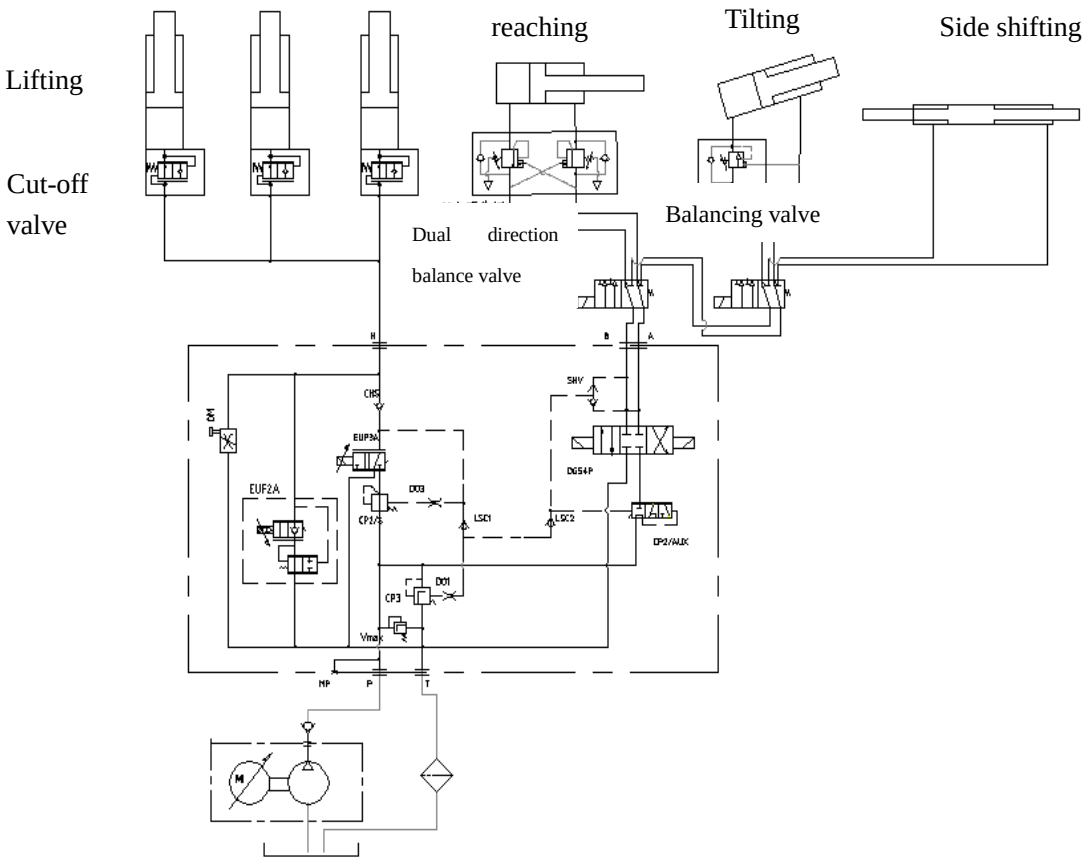

Figure 4-6-2 Economic type (single proportion) hydraulic principle diagram

4.6.1 Hydraulic oil tank

The hydraulic oil tank is used to store oil and besides it can dissipate heat in the oil (when the environment temperature is low, it can be used to keep the heat in the oil), dispel the gas in the oil and sediments dirt in the oil.

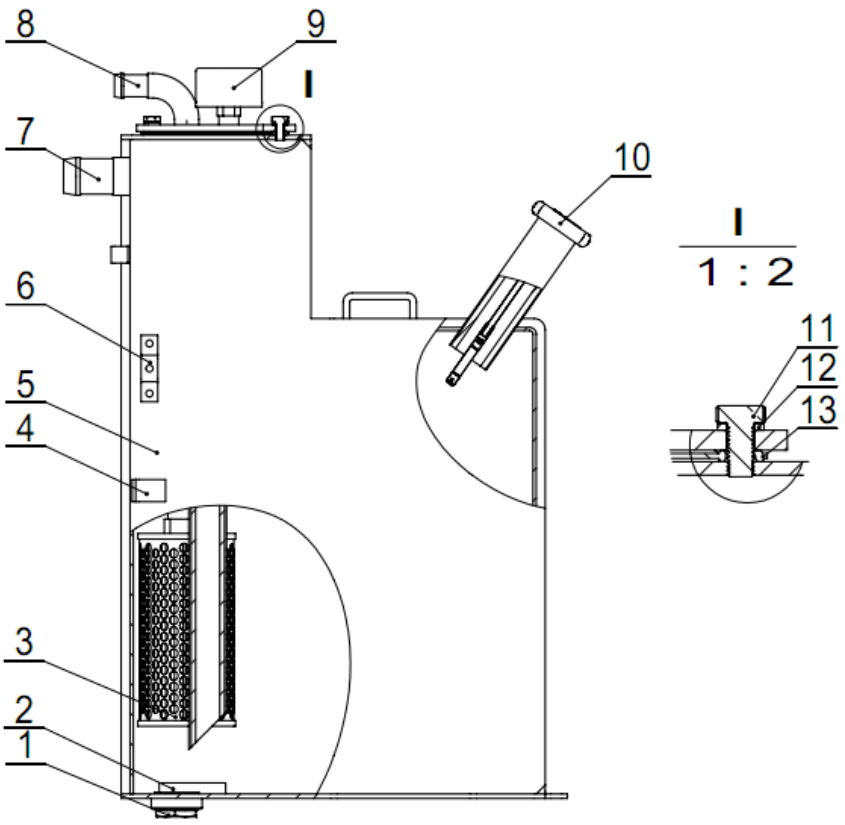

Figure 4-6-3 hydraulic oil tank

1. oil draining plug	2. magnet	3. return oil filter
4. oil tank install plate	5. hydraulic oil tank	6. line card bracket
7. oil suction pipeline	8. oil return pipeline	9. breather cap
10. oil adding cover	11. bolt	12. combined washer
13. oil cover gasket		

The return oil filter is used to keep the cleanness of the hydraulic oil. Change the filter after three months or 600h for the first time. In the future, change it every six months or every 1200h. The filter core code is 936756Q.

The oil dipstick is used to measure the oil level in the oil tank. When checking oil level, lower the mast completely and retract mast support. If the oil level is lower than the min. level, add oil.

4.6.2 Gear pump

The gear pump used in the hydraulic system is of outer meshed gear pump. See figure 4-6-4 for its working principle. A pair of meshed involute gear is installed inside of the housing. The two ends of the gear are sealed. The pump housing is divided into two sealed oil chambers that are oil suction chamber and oil discharging chamber. When the gear rotates as the direction shown in the figure, the right volume increases and the vacuum is produced. The oil in the oil tank enters into the oil suction chamber under the action of atmospheric pressure through pump oil suction pipe to fill the gears. With the rotation of chamber, gears bring the oil into the left chamber from right chamber to make the pressure of the left chamber increase and the oil goes out from the oil discharging port. Because the gears keep going, the oil suction port and oil discharging port keep sucking oil and discharging oil.

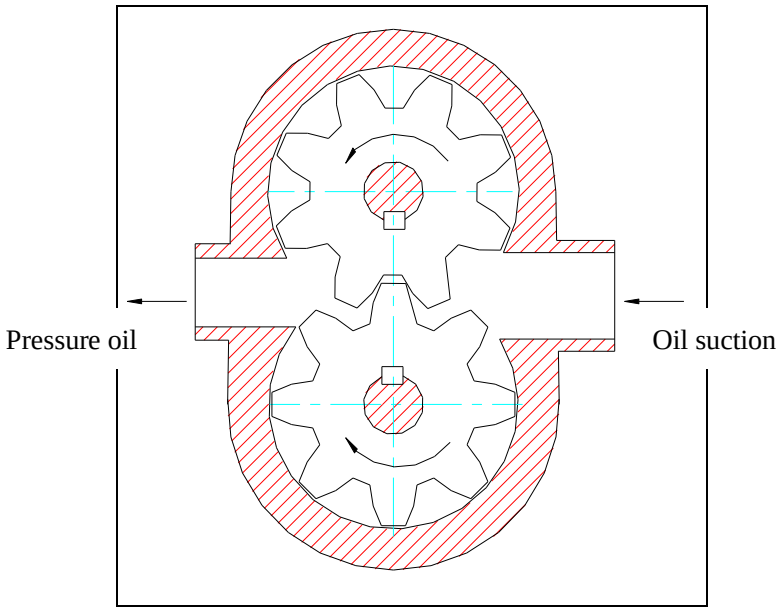

Figure 4-6-4 Gear pump working principle

4.6.3 Control valve

Control valve which achieves working devices lifting, front reach, tilting, side shifting and hydraulic system protecting integrates pressure control, flow control and direction control. The valve adopts proportion control and motor control. See figure 4-6-5 for its main structure and 4-6-6 for its explosive view.

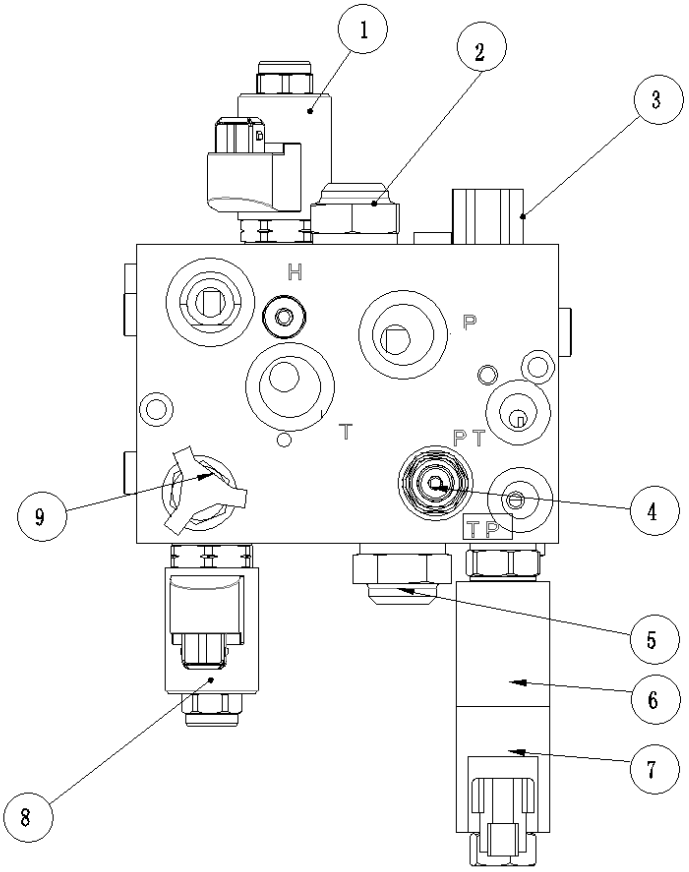

Figure 4-6-5 Valve structure

①solenoid valve for lowering control ② lifting pressure compensated valve

③auxiliary pressure compensated valve ④overflow valve

⑤system pressure compensated valve ⑥solenoid valve for auxiliary control

⑦ solenoid valve for auxiliary control ⑧ solenoid valve for lifting control

⑨ emergent manual lowering valve

(1) Lifting: ⑧ solenoid valve for lifting control gets electricity.

(2) Lowering: ①solenoid valve for lowering control gets electricity.

(3) Auxiliary functions: ⑥and ⑦get electricity.

Functions of other valves:

④ overflow valve: it realizes pressure protection of the hydraulic system.

⑨ emergent manual lowering valve: it realizes goods lowering manually when the solenoid valve for lowering control is out of effective.

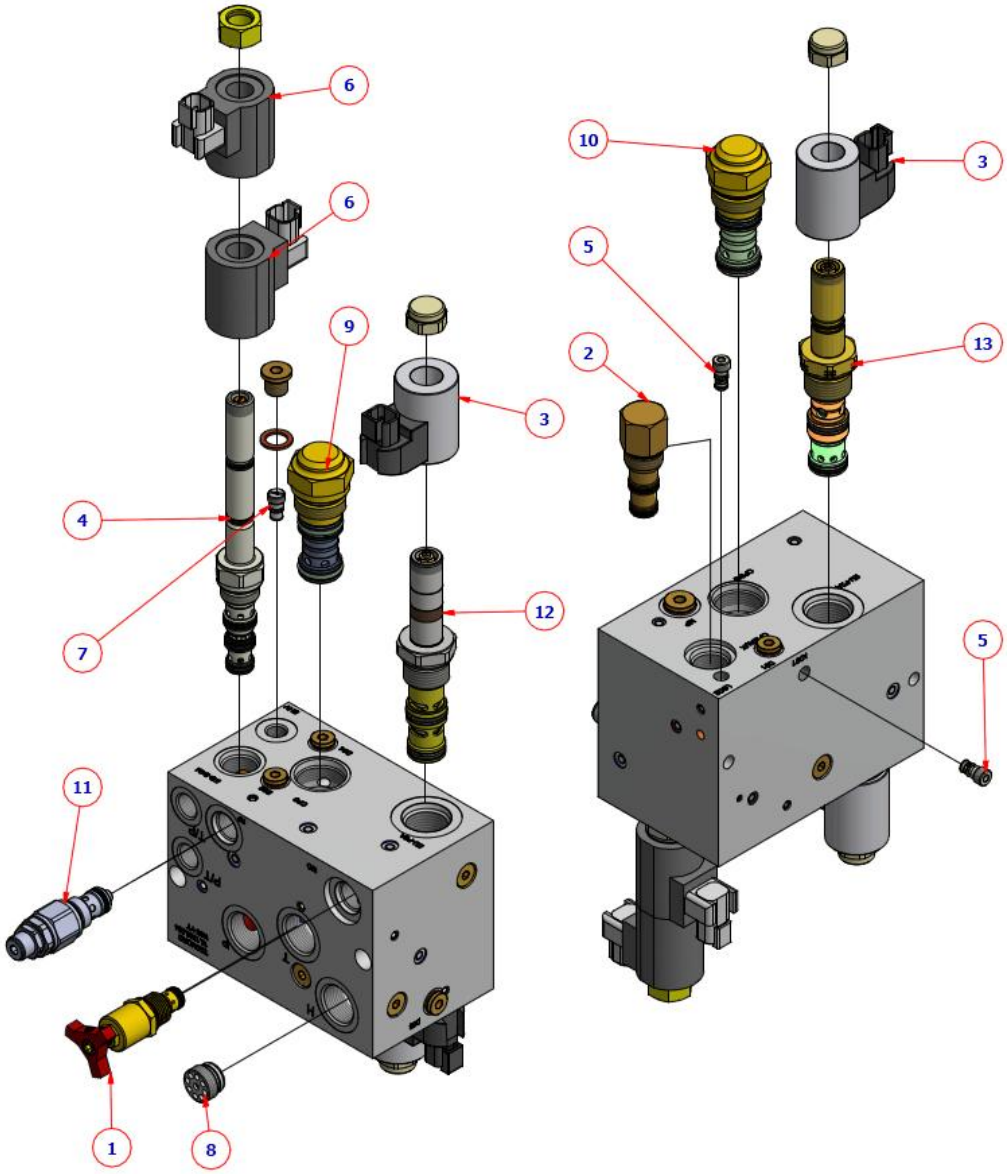

Figure 4-6-6 Explosive view of valve

1. Emergent manual lowering valve 2. Auxiliary pressure compensated valve

3. Lifting valve coil 4. Auxiliary valve core 5. One-way valve

6. Auxiliary valve coil 7. Shuttle valve 8. One-way valve

9. System pressure compensated valve 10. Lifting pressure compensated valve

11. Overflow valve 12. Lifting valve core 13. Lowering valve core

4.6.4 Operation of control valve

The control valve is operated through integrated knob. Different functions can be realized through corresponding buttons. See figure 4-6-7.

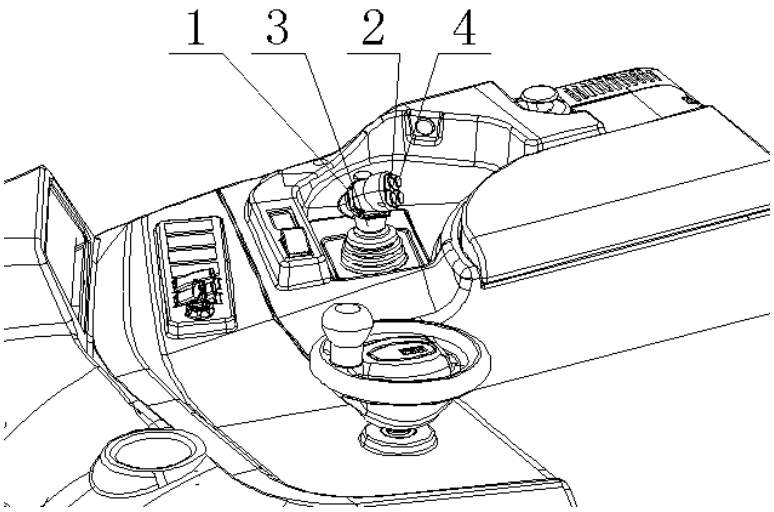

Figure 4-6-7 Control valve

1. Lifting button 2. Reaching button 3. Tilting button 4. Side shifting button

The fork lifts when slipping the lifting and lowering button upward; the fork lowers when slipping the lifting and lowering button downward. The fork bracket and fork reaches forward when pushing the reaching button upward; the fork bracket and fork will retract back when pulling the retraction button downward. Take the operator's standing position as standard, push the integrated knob forward, the fork will tilt forward; pull the integrated knob backward, the fork will tilt backward; the fork will shift left when pushing the left side shifting button to the left; and the fork will shift right when pushing the right side shifting button to the right.

See figure 4-6-8 for the signs of knob operation.

As you see in Fig. 4-6-8, the mast lift up when you push the lift lever forward, the mast fall down when you pull the lever forward. The mast tilt forward when you push the lever forward, and the mast tilt backward when the lever backward. When you push the reach lever forward, the mast go forward and also reach lever backward the mast backward. The mast go to the left when you push the side shifting lever forward, and also the mast go to the right when you push the shifting lever backward.

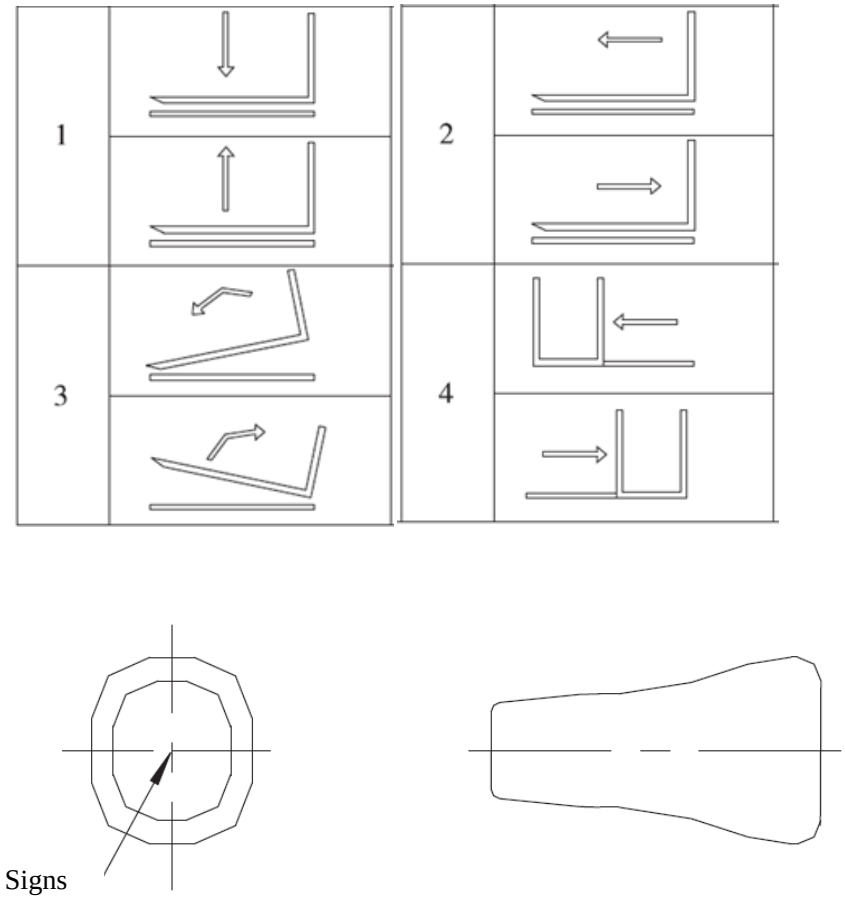

Figure 4-6-7 Signs of knob operation

4.6.5 Lifting cylinder

The lifting cylinder is of plunger type hydraulic oil cylinder. It is made up of cylinder body, plunger, plunger rod, cylinder cover, cut of valve and sealing parts and so on. Bearing and oil seal are installed on cylinder cover to support plunger rod and to prevent dust getting into it. Full free lifting cylinder includes front lifting cylinder and rear lifting cylinder. The front lifting cylinder is used to realize the free lifting travel distance of the working device, see figure 4-6-9 for its structure. The rear lifting cylinder is used to realize non free lifting travel distance. See figure 4-6-10 for its structure.

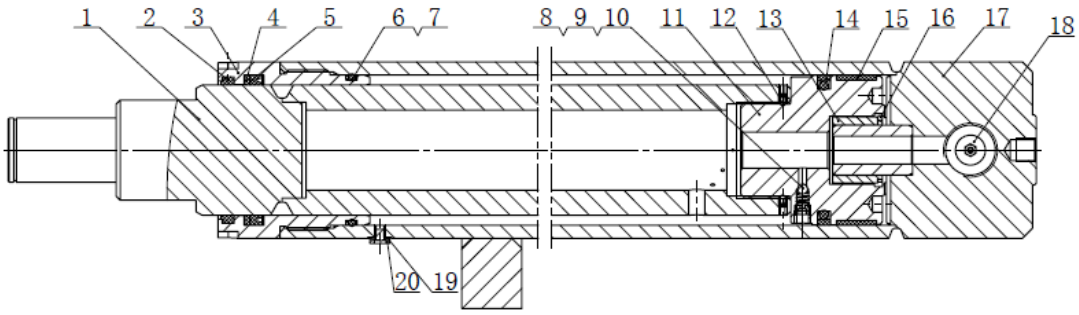

Figure 4-6-9 Front lifting cylinder structure

1. plunger rod
2. dust proof ring
3. guide sleeve
4. separation blade
5. seal ring for axle
6. O ring
7. separation blade
8. spring
9. lock screw
10. steel ball
11. plunger piston
12. lock screw
13. sleeve
14. seal ring
15. bearing ring
16. retainer ring
17. cylinder body
18. cut-off valve
19. shim
20. screw

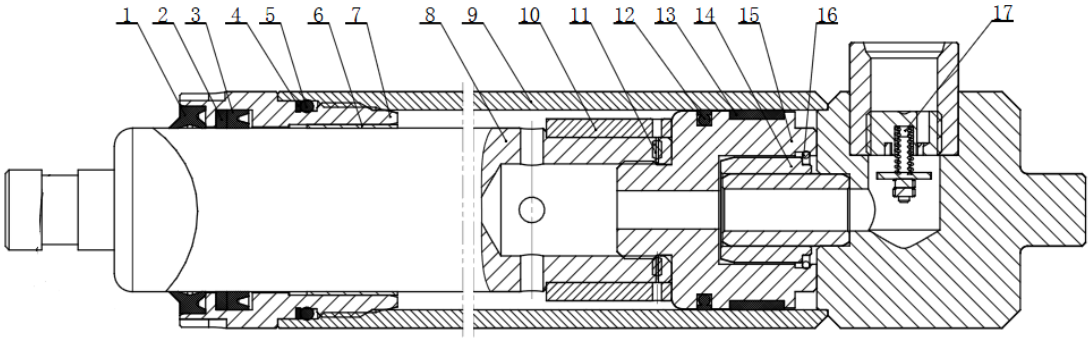

Figure 4-6-10 Rear lifting cylinder structure

1. dust proof ring
2. separation blade
3. seal ring for axle
4. separation blade
5. O ring
6. bearing
7. guide sleeve
8. plunger rod
9. cylinder body
10. adjusting sleeve
11. lock screw
12. seal ring
13. support ring
14. sleeve
15. piston
16. retainer ring
17. cut-off valve
18. shim
19. screw

The pipeline anti-bursting valve is used to protect the fork bracket and goods from falling caused by pipeline bursting so as to avoid damage of goods and persons.

It is installed on the cylinder bottom. The working principle is that the circuits from A chamber to B chamber and from B chamber to A chamber are unlocked normally, when the pipeline bursts, a great pressure difference is produced between A chamber and B chamber, then the shutter 4 locks the flowing hole of the valve body 1 to cut the oil circuit from the cylinder to the outside to ensure the safety of goods and person.

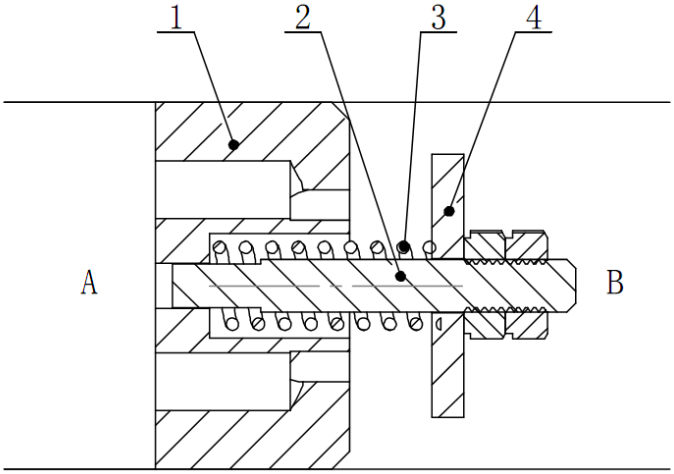

Figure 4-6-11 Pipeline anti-bursting valve structure

1. Valve body 2. Guide shaft 3. Spring 4.Seperation blade

4.6.6 Telescopic cylinder

The telescopic cylinder is of piston type double acting hydraulic cylinder to realize mast moving backward and forward. The front reach cylinder is made up of piston, piston rod, cylinder body, cylinder bottom, guide sleeve and sealing parts. End clearance buffering technology is applied to reduce the shock when the cylinder moving to the end. See figure 4-6-12 for its structure.

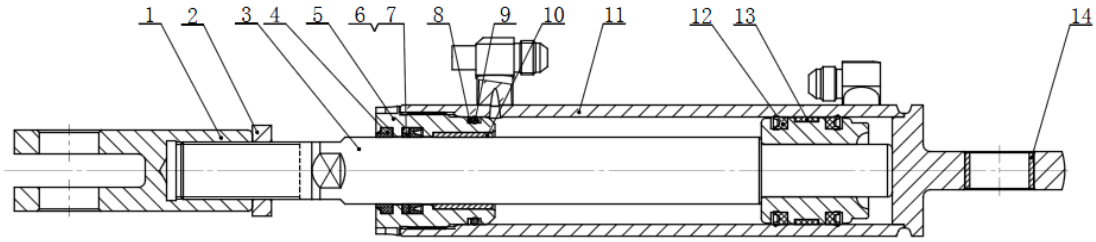

Figure 4-6-12 Telescopic cylinder

1. Ear ring 2. Nut 3. Piston rod 4. Dust proof ring 5. Guide sleeve
6. Seal ring for axle 7. Separate blade 8. Separate blade
9. O ring 10. Bearing 11. Cylinder body 12. Seal ring for hole
13. Support ring 14.bearing

4.6.7 Tilting cylinder

The tilting cylinder is of piston type double acting hydraulic cylinder to realize fork tilting forward and backward. See 4-6-13 for its structure.

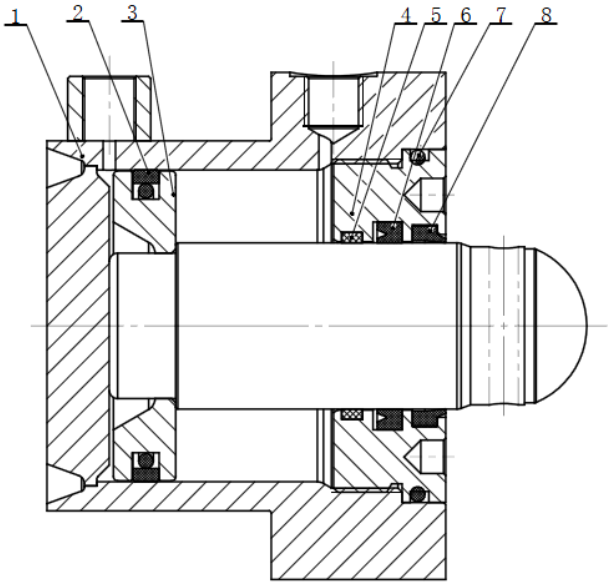

Figure 4-6-13 Tilting cylinder structure

1. Cylinder body 2. Seal ring 3. Piston rod 4. Guide sleeve
5. Support ring 6. Seal ring for axle 7. O ring 8. Dust proof ring

4.6.8 Side shifting cylinder

Side shifting cylinder is of plunger type single acting hydraulic cylinder to realize fork left and right shifting. See figure 4-6-14 for its structure.

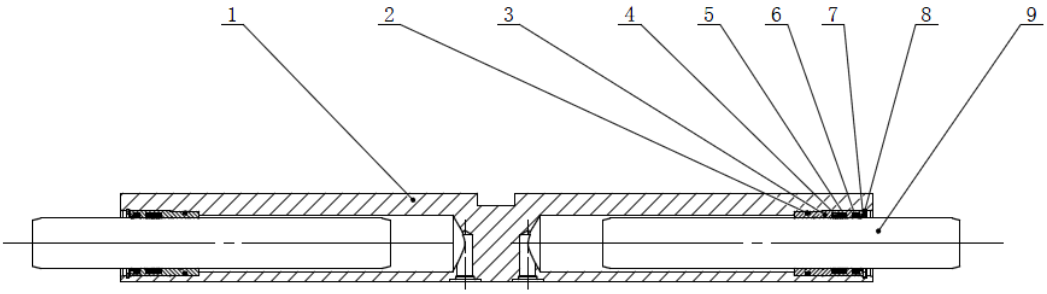

Figure 4-6-14 Side shifting cylinder structure

1. Cylinder tube assembly 2. O ring 3. Side shifting cylinder cover
4. U ring 5. Separate blade 6. Dust proof ring 7. Adjusting shim
8. Retainer ring 9. Plunger rod

4.7 Body system

4.7.1 Change drive wheel

See figure 4-7-1, when changing the drive wheel (13), please make sure that the material and size of drive wheel meet relative requirements. For more information, please refer to the truck plate.

1. Disconnect the battery and then wedge up the wheels. Lift and wedge up the power device to make the drive wheel away from the ground. Remove the 7 bolts and then remove the drive wheel. When removing drive wheel, be care not to damage stud.

2. Replace with new drive wheel.

3. Tighten the bolts manually and tighten them with a torque of 135-150Nm according to proper sequence.

4. Remove the wedges of power device, lower the power device, connect battery and ten remove the wedges of wheels.

5. Adjust the hinged points according to 4.7.3 in the manual.

4.7.2 Check and adjust the fame

1. Disconnect the battery and remove the battery from the truck. lift and remove the door.

2. Disconnect the connection with drive motors and electric brake device.

3. Disconnect the pipelines with steering motor and block the ends of pipelines with covers.

4. When removing the frame, remove the 4 bolts first and then remove the support covers on the two sides. Mark the positions of bolts and support covers and make sure the bolts and support covers are in the right position when assembling.

5. When assembling, tighten the 4 bolts which fixes the pivot to the power device with a torque of 305-340Nm.

Note: when carrying out regular maintenance, it is suggested not to remove the

frame from the power device completely.

6. Check the spring and installation parts.

7. Check the auxiliary support wheels.

4.7.3 Hinged points adjustment

Proper adjustment of hinged points is good for maintaining truck drive performance and stability and it is also good for prolonging wheel service life.

See figure 4-7-2. When adjusting the hinged points, the truck shall be placed on level ground. It is important for you to do that.

Place a level gauge with 4 inches behind the power device across the two legs. See figure 4-7-2. Move the truck until the truck is under level state at the two positions.

Find the area where the truck is under level state at the two position and mark the area (4) with tape or oil paint for later hinged points adjusting.

The trailing edge of supporting wheel shall point at drive wheel as (2) shown in the figure.

See figure 4-7-1, check spring (8) and supporting wheel (14). Change if necessary.

At the drive wheel side, adjust the hinged distance between adjusting bolt (1) bottom and corresponding drive device (4) to be 1.5mm+0.0-0.5mm. tighten the lock nut (2) with a torque of 375-405Nm.

At the supporting wheel side, through adjusting 2 bolts (11), adjust the hinged distance （12）between contacting surface of frame adjusting block (9) and spring and the bottom of two anti-motion block (7) to be 74mm+0.0-1.0mm. Tighten the lock nut (10) with a torque of 375-405Nm.

After adjusting, the spring (8) shall be able to rotate but it shall not be able to move up and down. Improper spacer, anti-motion block may affect truck stability. Correct clearance and spring rate have a direct connection with lifting height and side

shifting performance.

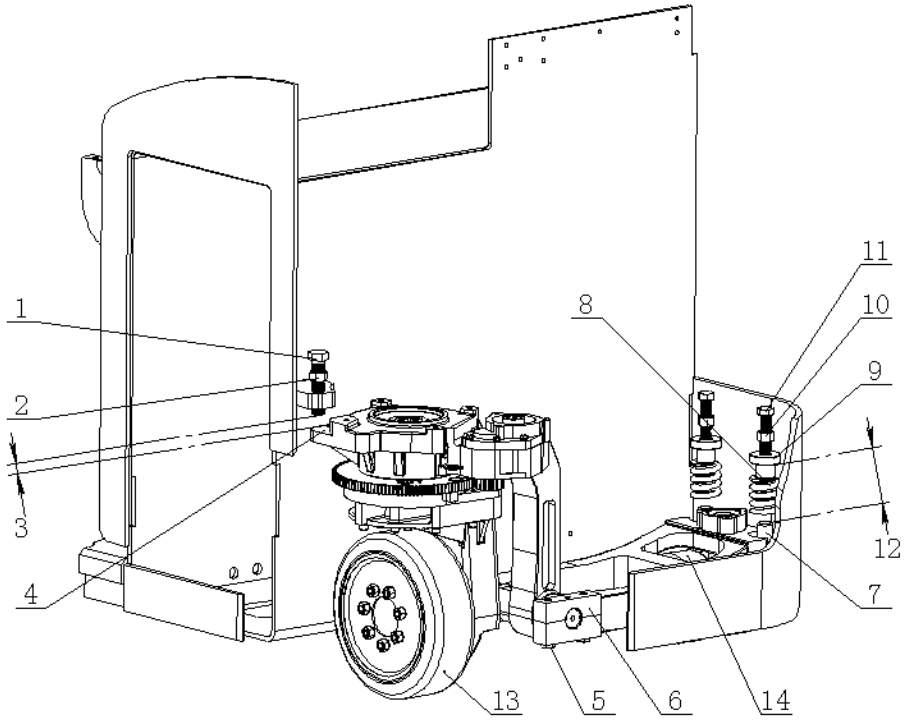

Figure 4-7-1 Diagram for frame adjusting

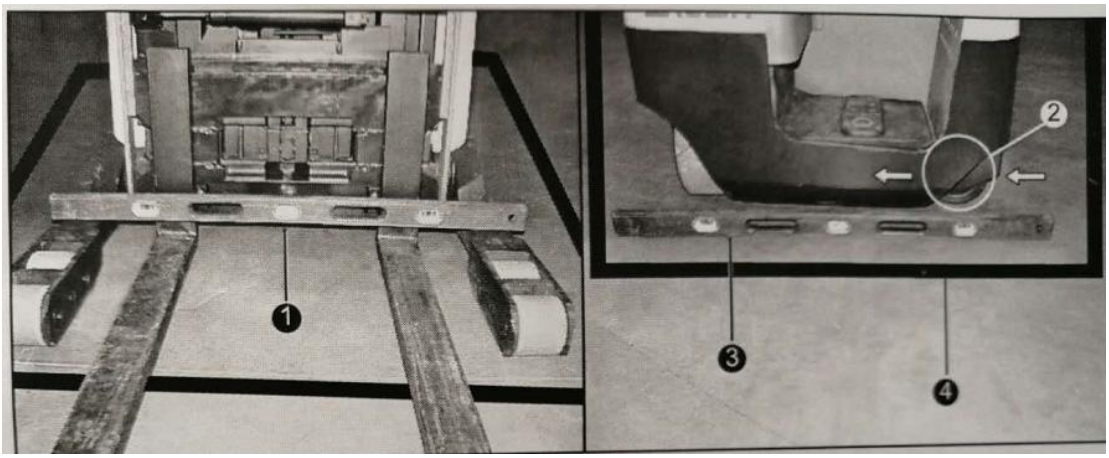

Figure 4-7-2 Diagram for hinged points adjusting

4.8 Lifting system

4.8.1 Composition

The standard configuration of the truck is three stage full free fork carrier telescopic mast. The outer mast and frame are fixed while the fork carrier is retractable. The mast is made up of inner mast, middle mast, outer mast, integrated

type telescopic attachment, front and rear lifting cylinder, hydraulic pipeline, control cables and so on. The attachment has retracting, front and rear tilting and side shifting functions.

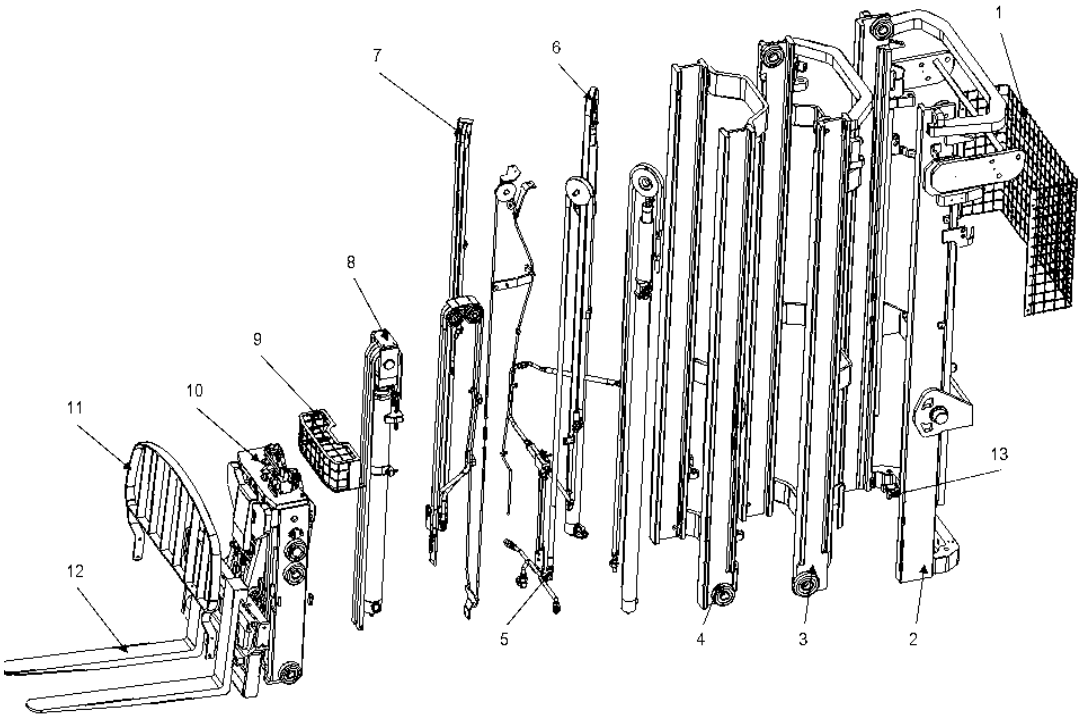

Figure 4-8-1 Structure of lifting system

1. Guard 2. Outer mast assembly 3. Middle mast assembly

4. Inner mast assembly 5. Mast pipeline

6. Rear lifting cylinder and chain for chain wheel

7. Attachment pipeline and control cables

8. Front lifting cylinder, chain wheel seat, chain wheel, chain

9. Pipeline guard 10. Telescopic fork assembly 11. Backrest

12. Fork 13. Mast fixing bolt

The outer mast channel steel is of C type and combined roller is installed on its upper end.

The middle mast channel steel is of H type and combined roller is installed on upper and lower end.

The inner mast channel steel is of H type and combined roller is installed on lower end.

The roller can not only bear the radial force and lateral force through adjusting the clearance between the combined roller and mast. (The maintenance of the all combined rollers is important. Take care of their safety.)

Combined roller:

Φ102.92(rest positions, the difference between combined rollers at top end of outer mast, inner mast and middle mast is that the adjusting bolts have different length, others are the same.)

Φ119.2 (at the lower end of middle mast)

Φ110.4 (out fork plate of attachment)

Φ78.5(inner fork plate of attachment)

4.8.2 Torque requirements

1)Tighten torque of four M20 bolts connecting outer mast cross beam and frame: 305-340Nm.

2) Tighten torque of four M12 bolts fixing mast install shaft and mast support: 90-100Nm.

3) Tighten torque of four M16 bolts fixing load wheel assembly and frame:225-250Nm.

4) Tighten torque of two M14 bolts fixing front cylinder: 130-140Nm.

4.8.3 Fork adjustment

Make the fork at its lowest position and under level state, adjust to make the distance between top surface of fork end and ground to be lower than 65mm.

The difference between max. fork height and fork height regulated in name plate shall be within ±25 mm.

4.8.4 Fork adjustment (after installment)

When the mast is near its highest position, it shall be level. If there is inclined phenomenon, it means the adjusting shim is too loose or unbalanced, it needs to be adjusted.

4.8.5 Combined roller adjustment

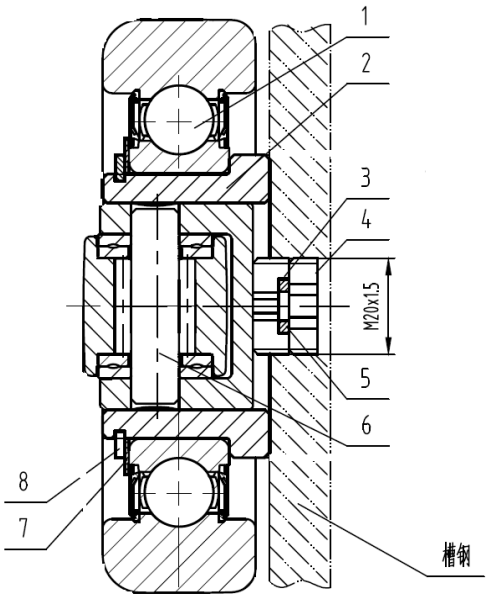

Figure 4-8-2 Combined roller structure

1. Main roller 2. Spindle nose 3.Adjusting screw 4. Adjusting screw
5. Elastic washer 6. Side roller 7. Dust proof piece 8.Retainer ring for axle

Note:

(a) Adjust the side roller clearance to be 0.3mm-0.5mm through rotating screw 3.

(b) Apply lubrication grease on roller surface and mast contacting face.

(c) Tighten adjusting screw 4 and rotate screw 3 in anti-clockwise direction. Make sure the screw 3 and 4 are against each other tightly to prevent the screw 3 from loosing.

Note : all roller adjusting methods are the same. Please refer to the steps above

for other rollers in the listing system.

4.8.6 Adjustment of rear lifting cylinder

Readjusting the lifting cylinder travel distance according to the following method after changing the lifting cylinder, inner mast, middle mast and outer mast.

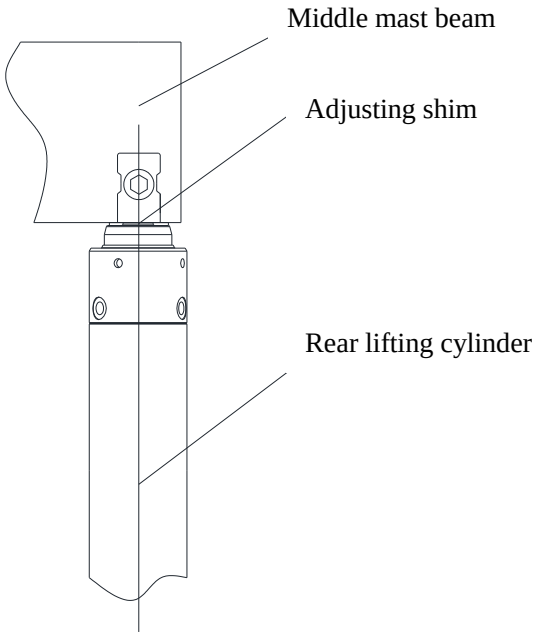

Figure 4-8-3 Rear lifting cylinder installation instruction

(1) Install the plunger rod into the middle mast beam after adding adjusting shim into the plunger rod head.

(2) Lift the mast slowly to the max. cylinder travel distance. Check if the two cylinders are synchronized. If the two cylinders do not stop at the same time, that means the two cylinders travel distances are different. Add shims between the plunger rod head which is lower and the middle mast beam to ensure the synchronization of two cylinders. The thickness of the adjusting shim is 0.5mm and 1mm.

4.8.7 Peeling

For new mast, peeling of mast surface is not rare. The phenomena is normal because it means the roller runs on the steel channel. The phenomena will disappear at last. The lubrication grease on the steel channel will stick these particles.

4.8.8 Disassembling of mast

4.8.8.1 When disassembling with unlimited space

1) Disconnect battery;

2) Remove backrest and fork from fork carrier;

3) Remove the guard and pipeline guard;

4) Connect a lifting equipment with telescopic fork to lift the telescopic fork and make the chain to under loose state. Remove the chain from the lifting cylinder. If necessary, change the sealing parts on top of the lifting cylinder.

Note: the telescopic fork assembly is easier to be kept under vertical position when it is retracted back.

5) Remove the chain, control cable, hydraulic pipeline, chain wheel seat, chain wheel and pulley carrier on the telescopic fork assembly. Then lift the telescopic fork assembly from the inner mast top end with lifting equipment. Put two wood battens on the ground and lay the telescopic fork on them horizontally.

6) Remove the front lifting cylinder.

7) Connect a lift equipment on the inner mast. Lift the inner mast and make the chain to be loose. Remove the chain nuts.

8) Remove the control cables, hydraulic pipeline, chain and pulley from the top of middle mast and lower end of inner mast. Mark the positions of all parts. The left side is different from the right side.

9) Lift the inner mast from the middle mast top end with lifting equipment. Then lay the inner mast horizontally on the ground.

10) Remove the bolts and fixing clip on the rear lifting cylinder. If necessary, change the sealing parts on top of lifting cylinder.

11) Remove the rear lifting cylinder.

12) Lift the middle mast and remove it from outer mast top end. Put the middle mast horizontally on the ground.

4.8.8.2 When disassembling with limited space

If the head height is not enough for the mast to be lifted to a certain height for

disassembly, then it is necessary to remove the mast from frame through removing bolts and then lay horizontally. Please do according to the following procedures:

1) Disconnect the battery.

2) Remove the guard, pipeline guard and tighten nuts on top of overhead guard.

3) Remove the backrest, fork and telescopic fork assembly.

4) Disconnect the cables and pipeline from power device to mast assembly. Collect the fluid with container.

5) Connect a lifting equipment with outer mast upper beam.

6) Loosen the four M12 bolts at mast seat and remove mast seat.

7) Lift the middle mast and inner mast to make the four M20 bolts on the lower beam of outer mast expose.

8) Loose the four M20 bolts on the lower beam of outer mast.

9) Lift the mast assembly from the frame.

10) Put the mast assembly horizontally in a proper place.

Note: when the mast assembly is well placed, before removing cylinder and mast assembly, please make sure the lifting point of lifting equipment stay as close to the center of mast assembly as possible in order to keep balance.

4.8.9 Assembly

Note: before assembly, please refer to the relative requirements such as torque requirements, fork adjustment described before.

The assembly order is opposite from the disassembly order.

After the mast is reassembled, check the upright roller condition and clearance.

Check if the fixing clamp of front cylinder is cracked and change if necessary.

4.8.10 Maintenance of telescopic fork assembly

The telescopic fork assembly is the most important part of the truck. Its functions directly decides whether the functions of truck can be realized. In order to prolong telescopic fork’s service lift as far as possible, proper maintenance is particularly

important. Improper maintenance has a bad effect on truck.

1) check the lubrication condition of pin axle, bearing and side shifter moving surface of each hinged points regularly. Add lubrication grease if necessary.

2) check the clearance of side roller on inner and outer fork plate. Adjust according to wear condition. Refer to the “adjusting of combined roller” for its adjusting method and requirement.

3) Check the bearings at each hinged points and two sides of telescopic cylinder regularly. When the bearing is worn out and the oil storage tank is worn flat, change it.

4) Check the hydraulic pipelines of telescopic fork regularly to prevent pipeline from aging.

4.8.11 Lifting chain maintenance

The lifting chain is very important part of truck. it is necessary to maintain the lifting chain in order to truck safety working. Improper maintenance period will result poor performance of chain.

4.8.12 Cleaning of lifting chain

Note: when delivery, the lubrication grease on the lifting chain is used to protect it from corrosion. Please do not remove the lubrication grease on the lifting chain.

Note: lubrication frequency is different with working condition and ambient condition.

4.8.13 Lifting chain lubrication

Please lubricate the lifting chain according to maintenance table to prolong chain service life as far as possible. Apply lubrication grease between chain parts and on the surface of chain so as to:

1) reduce the wear at contacting points;

2) prevent it from corrosion;

3) reduce the frequency of rotating pin;

4) avoid over tight contacting of roller in the chain;

5) realize smooth moving of lifting chain;

6) reduce the tensity of lifting chain.

4.8.14 Check the lifting chain

Measure the wear of lifting chain with tape.

4.8.14.1 Determine the pitch of lifting chain

1) Lift the fork by 152mm.

2) Choose the chain pitch bypassing pulley during operation.

3) Measure the center distance between two chain pin of outer chain plate, that is the pitch of lifting chain.

4) Find the pitch value in the table 1 and then determine the pitch number.

5) Find the pitch number required in table 1 on the chain.

6) Measure from the center of first chain pin to the center of last one.

Note : pitch is the distance between the chain pins.

7) Calculate the elongation(%) of lifting chain.

Elongation of lifting chain %=[measured length /(newly lifting chain length/100)]-100

Example: the lifting chain pitch is 25mm. Table 1 shows that “newly chain length” corresponding lifting chain pitch is 305mm. The measured length by tape is 309mm.

X=[309/(305/100)]-100

X=309mm/3.05-100

X=101.3-100

X=1.3

In the example, the elongation of lifting chain is 1.3%.

8) if the elongation exceeds 3% or it will exceed 3% before next maintenance, please change the lifting chain. Refer to table 4-8-1.

It is forbidden to repair the lifting chain through changing the worn pitches.

If a pair of lifting chain is used on the truck, please change a pair of them when changing.

If there is only a part of lifting chain is worn, please change a pair of them when changing.

Check if there is any other damage of lifting chain.

Table 4-8-1

Pitch		Chain pitch	Length of new chain		Limit of wear	
mm	in		mm	in	mm	in
19.05	0.75	16	305	12	314	12.375

4.8.14.2 Adjusting of chain tensity

a) put the telescopic fork vertically and make the fork lower to the ground. Adjust the adjusting nut of joint at the top end of front cylinder’s lifting chain to make sure the distance between the center of telescopic fork rear carrier’s low edge of inner mast be 30-35mm.

b) Lower the fork to the ground and tilt back completely. Adjust the connector at the top end of chain and nut to make the tensity of two chains the same. (please be care when maintaining the lifting cylinder.)

4.8.15 Change the lifting chain

1) Find the part number of lifting chain in parts manual and make sure the lifting chain standby is suitable for your truck.

Note: please make sure the lifting chains are changed in pairs. It is not easy to ensure same tensity between new lifting chain and the replaced one.

2) If the lubrication grease is dry when delivery, immerse the lifting chain in the engine oil for at least 30 minutes.

3) Check the chain anchor and pulley carefully after removing the lifting chain from mast.

4) Change the damaged chain anchor.

5) Change the worn pulley and check if the pulley bearing is worn out.

6) Do not paint the new lifting chain.

7) Install the new lifting chain with new pins.

8) After the lifting chain is connected to chain anchor, adjust the chain tensity to match fork or platform height.

Proper installment of chain and adjusting of mast will prolong chain service life.

4.8.16 Check fork

Wear will reduce the fork thickness gradually. Please make sure the fork height meets the requirements of technical specification. Please do not make the fork rub against with ground during normal travelling. If the fork rubs against the ground, please check the adjustment of lifting chain. The wear at the heel of fork shall be exceed 10% of original thickness. If the wear exceeds the value, fork load capacity will reduce to 80% of rated capacity. Use equipments such as vernier caliper, 160 scale and so on.

Be familiar with fork capacity. Fork capacity and load center are pasted on the truck. Overload may cause permanent deformation or serious fatigue condition.

Fatigue crack often begins from the hell part of fork. Crack can be found during heel check. Check if there is any crack within 130mm of the outer diameter of fork heel at any side. If there is crack, it means the performance at the area is reduced and it is necessary to change fork. Check if there is crack visually every day. For more accurate check, use dye penetrant or magnaflux.

Overload, collision with solid object or uneven distribution of load may cause curve or distortion of fork. The max. allowable height difference at fork heel shall be within 3% of fork length.

The included angle between fork horizontal section and backface of vertical section shall be lower than 93°. If the included angle is larger than the value, the fork shall be changed.

4.8.17 Oil cylinder

4.8.17.1 General description of lifting cylinder

The lifting cylinder adopts plunger type oil cylinder. It is made up of cylinder body, plunger, plunger rod, cylinder cover, cut-off valve, sealing parts and so on. there is bearing and oil seal in the cylinder cover to support plunger rod and prevent dust from entering.

The lifting cylinder of the truck includes front lifting cylinder and rear lifting cylinder. The front cylinder realizes free lifting of working device. See figure 2 for its structure. The rear lifting cylinder realizes lifting of inner and middle mast. See figure 1 for its structure.

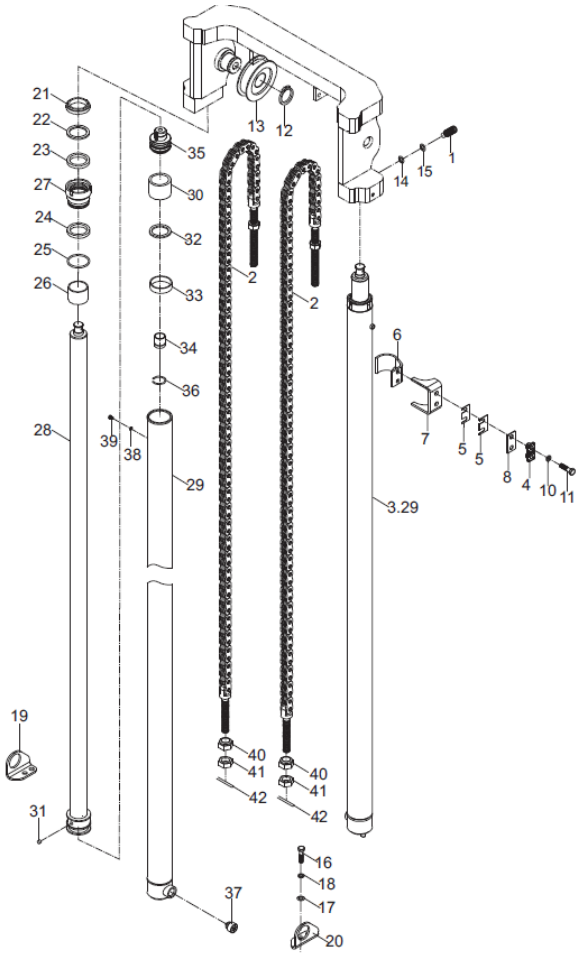

Figure 4-8-4 Assembly of rear lifting cylinder and its composition

21. Dust proof ring 45x57x7/10 22. Separation blade 45x55x3

23. Sealing ring for axle 45x55x6 24. Separation blade 60x54x1.25

25. O ring 53.57x3.53 26.bearing 4530 27. Guide sleeve 28. Plunger piston

29. Cylinder body 30. Adjusting sleeve 31. Fixing screw M4 x6

32. SPG0 type sealing parts 55x46.5x3.8 33. Supporting ring 55x50x20

34. Sleeve 35. Piston 36. Retainer ring 37. Safety valve G1/2

38. Shim 39. Screw 5 x5

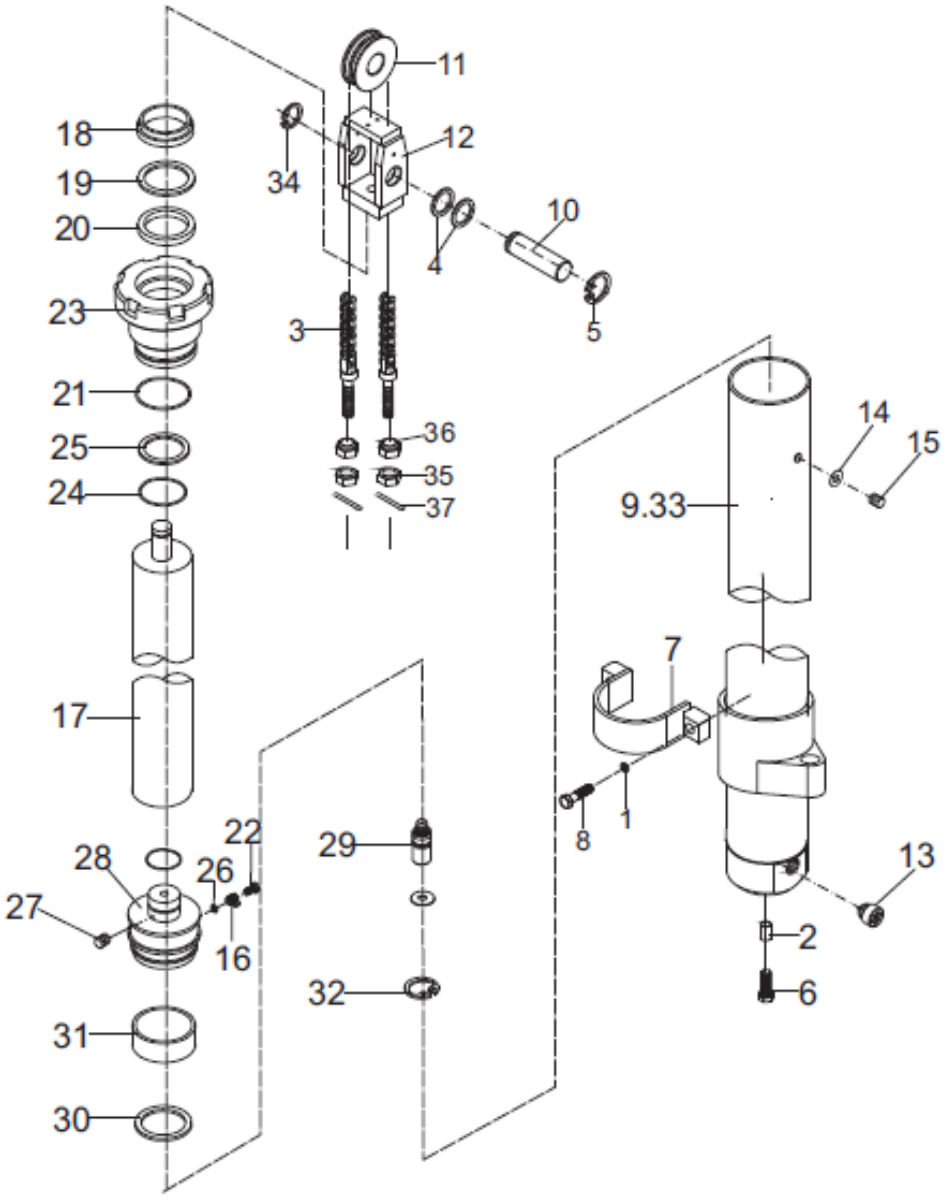

Figure 4-8-5 Installment of front lifting cylinder and its composition

13. Safety valve 14. Shim 15. Screw M5x8 16. Spring 17. Plunger rod

18.Dust-proof ring 65x73x5/6.3 19. Separation blade 75x65x3

20. 605 sealing ring for axle 65x75x6 21. O ring 75x3.1 22. Lock screw M8x6

23. Guide sleeve 24. O ring D70X3.1 25. Shim 70x75x1.25 26. Steel ball 5

27. Piston 28. Lock screw M4x6 29. Sleeve

30. Combined sealing ring 75x59.5x6.3 31. Supporting ring 75x70x20

There is anti-bursting valve at the bottom of front and rear lifting cylinder. The pipeline anti-bursting valve is used to protect the fork bracket and goods from falling caused by pipeline bursting so as to avoid damage of goods and persons. It is installed on the cylinder bottom. The working principle is that the circuits from A chamber to B chamber and from B chamber to A chamber are unlocked normally, when the pipeline bursts, a great pressure difference is produced between A chamber and B chamber, then the shutter 4 locks the flowing hole of the valve body 1 to cut the oil circuit from the cylinder to the outside to ensure the safety of goods and person.

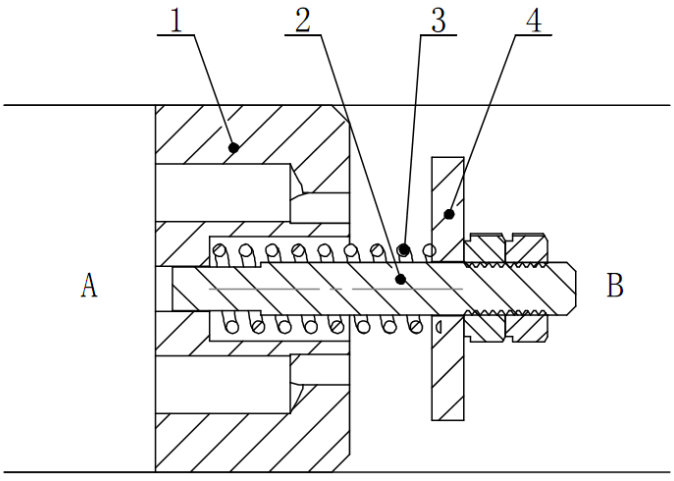

Figure 4-8-6 Pipeline anti-bursting valve structure

1. Valve body 2. Guide shaft 3. Spring 4.Seperation blade

4.8.17.2 Air bleeding of lifting cylinder

- Front lifting cylinder

  1) Turn on the air bleeding screw of front lifting cylinder slowly. See item 15 in figure 2. Let the air in the oil cylinder out until there is continuous hydraulic oil flowing out of air bleeding screw.

  2) Tighten the air bleeding screw.

- Rear lifting cylinder

1) Turn on the air bleeding screw of rear lifting cylinder slowly. See item 39 in figure 1. Let the air in the oil cylinder out until there is continuous hydraulic oil flowing out of air bleeding screw.

2) Tighten the air bleeding screw.

For the other rear lifting cylinder, carry out the same steps above.

4.8.17.3 Disassembly of oil cylinder

4.8.17.3.1 Disassembly of rear lifting cylinder

Disassemble the right or left lifting cylinder according to the following steps. Do not disassemble the two cylinder at the same time. Disassemble the first one completely and then disassemble the second one.

1) If possible, park the truck on level ground and under the crane. Then wedge the wheels and remove the fork.

2) Block up the middle mast with two wood batten.

3) Turn the key switch off and disconnect the battery.

4) Disconnect the pipeline with the cylinder.

5) Remove the screw fixing the plunger piston to the install block on top of the middle mast. Do not remove the screws on the two cylinders once. Remove the one on the cylinder that needs to be removed from the truck. See item 1 in figure 1.

6) Remove the cylinder fixing clamp. See item 6 and 7 in figure 1.

7) Remove the cylinder limit plate. See item 19 or 20 in figure 1.

4.8.17.3.2 Disassembly of front lifting cylinder

Disassemble the front lifting cylinder according to the following steps:

1) Disconnect the truck power and then disconnect the battery.

2) Remove the pipelines guard.

3) Remove the chains, chain seat and other accessories on the front cylinder head.

4) Lift the telescopic fork with lifting equipment to make it be higher than front lifting cylinder. Support the bottom of telescopic fork with hard wood.

5) Disconnect the hydraulic pipelines and control cables to the cylinder.

6) Remove the cylinder limit bolt, see item 6 in figure 2.

7) Remove the cylinder fixing clamp, see item 7 in figure 2.

Place a container under the cylinder that is to be disassembled. Disconnect the hydraulic pipelines from the bottom of cylinder. Block the cylinder and pipeline connectors with plug to protect the hydraulic oil from pollution and to protect the connectors from damage. Also it is good for oil draining.

Take care when disassemble and assemble hydraulic oil cylinder and ensure the cleanness of cylinder. Before disassembling, clean dirt and grease on its surface. After the cylinder is disassembled, clean all metal parts with solvent and then dry them with compressed air. Check the plunger piston assembly and cylinder bore. If there is scratch, slotting, pit or wear, change it.

4.8.17.4 Tilting cylinder

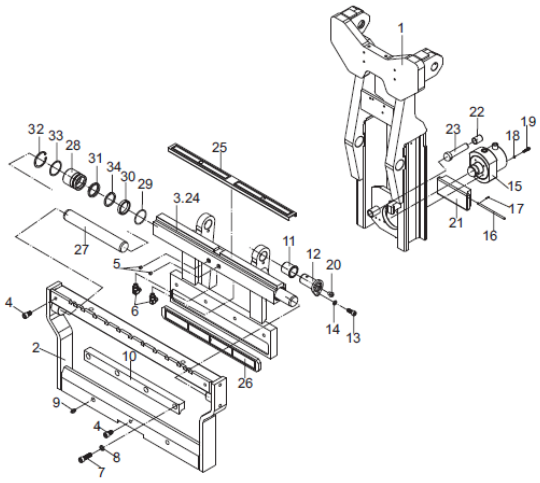

Figure 4-8-7 Diagram of side shifter assembly

Tilting cylinder is installed at the bottom of telescopic fork (item 15 in figure 4-8-7 is tilting cylinder). The tilting cylinder is a double-action piston type cylinder. Be care when carrying out any repair. If there is abnormal leakage on the cylinder

cover or the cylinder can not tilt, remove the cylinder form truck for repair.

4.8.17.5 Forward reaching cylinder

The forward reaching cylinder connects inner fork plate or landing bracket assembly (the item 5 and 6 in figure 4-8-8 are left and right forward reaching cylinder respectively). The forward reaching cylinder also is a double-action piston type cylinder. Be care when carrying out any repair. If there is abnormal leakage on the cylinder cover or the cylinder can not tilt, remove the cylinder form truck for repair.

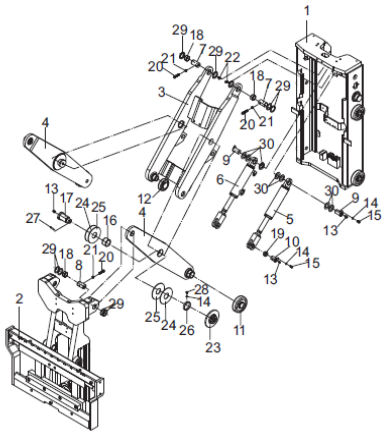

Figure 4-8-8 Diagram of telescopic fork

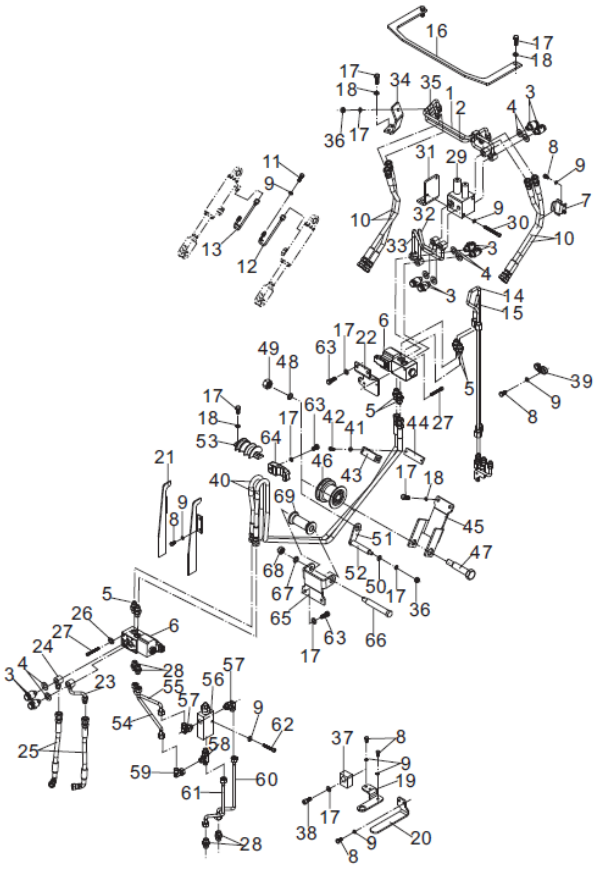

Figure 4-8-9 Pipelines layout

4.8.17.6 Cylinder air bleeding of telescopic fork assembly

- Air bleeding---forward reaching cylinder

1) Loose the pipelines slowly of part 1 and part 2 as shown in figure 4. Let the air in the oil cylinder out until there is continuous hydraulic oil flowing out from gap.

2) Tighten the pipeline connector.

- Air bleeding----tilting cylinder

1) Loose the pipeline slowly of part 28 as shown in figure 4. Let the air in the oil cylinder out until there is continuous hydraulic oil flowing out from gap.

2) Tighten the pipeline connector.

4.8.18 Forward reaching system and attachment

4.8.18.1 Forward reaching assembly

When the straddle legs can not enter its inner or lower side, the truck can realize lift, transport or stack goods through forward reaching assembly. Park the truck before

load and adjust the fork to proper height, then reach the forward reaching bracket. Operate the control on multi-functional control knob towards the direction away from the operator and the forward reaching bracket is extended. Operate the control on multi-functional control knob towards the operator and the forward reaching bracket is drawn back. The speed of forward reaching bracket varies with the rotation range of control. After the goods are picked up, draw the forward reaching bracket back completely and lower it before travelling.

4.8.18.2 Check the forward reaching assembly

The anti-motion block is at the bottom and on top pf the bracket assembly. When the forward reaching assembly is drawn back completely. The anti-motion block can prevent the metal parts from collision. Adjust the adjusting shim of anti-motion block to make the forward reaching cylinder connect with fork bracket when cylinder is drawn back.

The anti-motion block uses shims to ensure its proper position. Tighten the screw to make the screw is fixed through adhesive substance. Then tighten the screw with a torque of 3.2-3.6Nm.

4.8.18.3 Adjusting of forward reaching cylinder

Extend the forward reaching mechanism completely. The journey from the drawn position to its max. extending position is 600mm. when the forward reaching cylinder is extended completely, rotate the cylinder rod to gain the proper dimension.

4.8.18.4 Disassembling of forward reaching mechanism

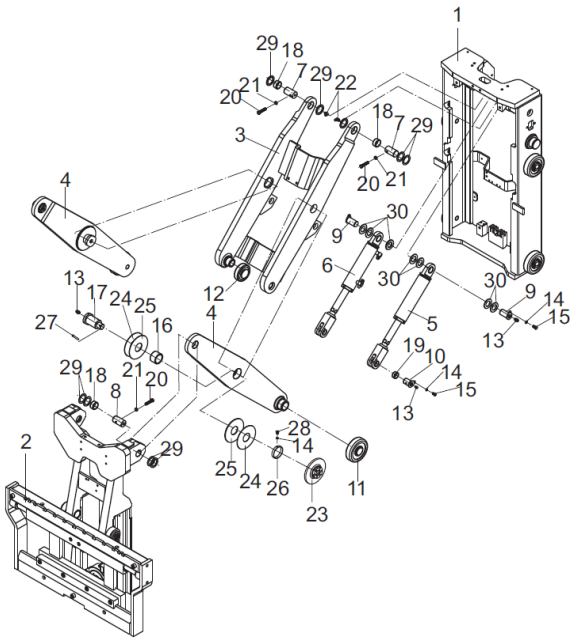

Figure 4-8-10 Structure of telescopic fork assembly

Note: disconnect the battery. If the telescopic fork needs to be disassembled completely, disassemble the forward reaching assembly from the mast. Thus it is easier for disassembly.

1) Remove the four bolts fixing the backrest (it is not shown figure 4-8-10) to the fork plate then remove the backrest.

2) Remove the fork (it is not shown figure 4-8-10) from the fork carrier.

3) Extend telescopic fork and then place a wood piece of 50×100×200mm on the right channel steel or left channel steel of item 1 as shown in figure 4-8-10.

4) Draw the forward reaching back until the combined roller 11 on scissor plate 4 lay against the wood piece.

Remove the forward reaching cylinder and the wood piece can prevent the forward reaching assembly from drawing back.

5) Remove the hydraulic pipeline, solenoid valve, cable and accessories on attachment.

6) Remove the part 9 and 10 of telescopic cylinder as shown in figure 4-8-10 and then remove the left and right telescopic cylinder.

7) Support the side shifter assembly 2 with lifting equipment or other proper method. After the pix axle 8 as shown in figure 4-8-10 is removed, the side shifter assembly 2 in figure 4-8-10 can be removed. Place the side shifter assembly on the ground horizontally.

8. Lift the inner fork plate with lifting equipment and remove the pin axle 7 as shown in figure 4-8-10.

9) Remove the inner fork plate and outer fork plate.

10) Remove the limit ring 26 and limit pin axle 27 as shown in figure 4-8-10. Remove the lock cover 23 and shim 24.

11) Remove the scissor plate assembly 4 as shown in figure 4-8-10.

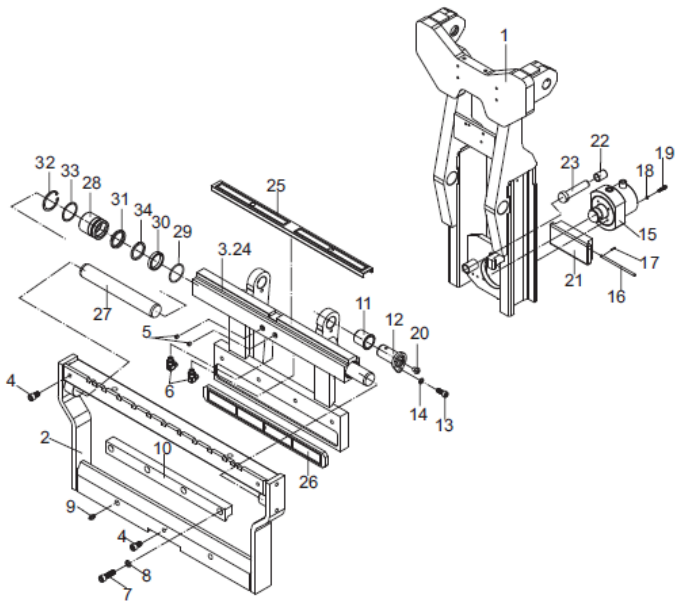

Figure 4-8-11 Structure of side shifter assembly

12) Remove the pin axle 12 as shown in figure 4-8-11. Divide the side shifter assembly into two parts. The rear parts of fork carrier 1,tilting cylinder 15, top block of tilting cylinder 21, pin axle of top block 16 and auxiliary top rod 23 belong to the rear part and others are front part.

13) Remove the pin axle of top block 16 as shown in figure 4-8-11. Remove the top block of tilting cylinder 21 and auxiliary top rod 23.

14) Remove the screw 19 as shown in figure 4-8-11. Remove the tilting cylinder 15.

15) Remove the screw 7 as shown in figure 4-8-11. Remove the limit plate 10 and side shifter front carrier 2.

Note: make sure the lifting equipment has the capacity of 905kg at least.

4.8.18.5 Change the axle sleeve (forward reaching assembly)

When removing the old axle sleeve, make sure the area near axle sleeve is well. If there is any damage, remove all furs or coarse surface.

Apply a thin layer of lubrication grease on axle sleeve seat to make it is easy for install and reduce the damage possibility.

Note: after assembling, check all axle sleeve standby and make sure wear surface is well.

4.8.18.6 Repair and adjusting of center pix axle

Note: make sure the cleanness of all contacting surface and make sure there is no furs or fragment that may damage the thrust washer.

When changing the washer 24 and 25 on two sides of scissor plate assembly as shown in figure 4-8-10, apply a thin layer of grease on all surfaces.

Please tighten lock cover 23 on the pin axle 17 to lock position. Loose the screw nut and then tighten it to a torque of 7.3Nm. Then loose it to the following position nearest to the slotted pin.

4.8.18.7 Assembling of forward reaching mechanism

Before assembling, all parts hall be clean and make sure there is no furs or coarse edge that may damage axle sleeve during assembling. Apply a thin layer of grease on all axle sleeve, washer or pin axle.

The assembling steps are opposite from the disassembling steps.

Note: 1. If the scissor plate assembly 4 can not be installed into bracket 1 as shown in figure 4-8-10, it means that there is deformation or curve of scissor plate assembly 3,

bracket 1 or scissor plate 4.

2. The distance between tops of scissor plate assembly 4 is 366mm.

4.9 Electric System

4.9.1 General description

The electric system is equipped with a whole AC control system. With the system, the control of the whole truck can be low noisy, high efficient, smooth and safe.

The electric system is made up of intelligent instrument, traction control system, lift control system, steering control system, battery, illumination system, back buzzer (optional), harness and so on.

Traction control system consists of lateral hold type electronic rocking bar, travel switch, foot brake, electromagnetic brake, traction control module, AC traction motor;

Lift control system consists of lateral hold type electronic rocking bar, valve control module, lifting control module, AC pump motor;

Note: The products are subject to improvements and changes. If the products are not corresponding with the manual, please contact with the manufacturer.

See attached figure for electric system principle diagram.

4.9.2 Detailed description of the electric system

1) CAN bus technology

The AC type electric reach truck applies the CAN bus technology. It links with each CAN module (traction control module, lift control module, steering control module, instruments display module) and acts as a connection point between the outside equipments and the CAN bus. The hand manual of ZAPI brand can link with every module and any other module in the network through CAN bus.

STE MODEL in the sub-menu is used to choose the module user wants to link with. The data relating to the each module in the CAN bus is followed:

Related figures in CAN bus	Module
01	VCM valve control

02	Traction controller
05	Lifting controller
06	Steering controller
16	Meter

2) Meter

A) General description

GRAPHIC DISPLAY is an intelligent dash board connected to the truck through CAN bus. The intelligent dash board displays truck working state and it has diagnosis function. It offers truck working mode shifting and set of lifting height pre-selector (optional).

B) Layout of dash board

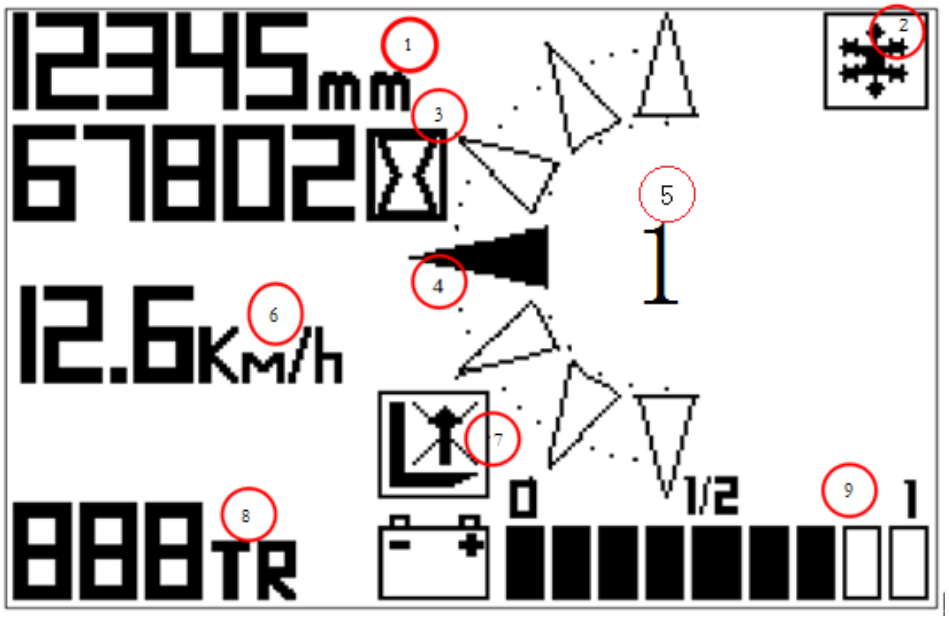

Figure 4-9-1 meter dash board layout

(1) Fork height indicator (optional)

It is used to display the current fork height and the unit is mm.

(2) Heating in cold environment indicator (optional)

When the electric heating is started in cold storage, the indicator shows.

(3) Hour meter

When the hour glass symbol flickers, it means it is recording time. The number shows the current working hours.

(4) Wheel angle indicator

It shows the current wheel angle and direction. There are 12 arrows and only on arrows is highlighted.

(5) Working mode indicator

It shows current working mode. The working mode has “1-3” and turtle speed gear.

(6) Speed display

It shows current truck speed and the unit is km/h

(7) Lifting lock indicator

It shows lifting is locked.

(8) Fault code indicator

It shows the fault node and fault code.

(9) Electricity quantity indicator

It shows the current electricity quantity.

C) Meter usage instruction

(1) Turn on the key switch and the meter system carries out self checking after it gets electricity. Battery electricity quantity, truck speed, traction hours and wheel angle is shown on the home page.

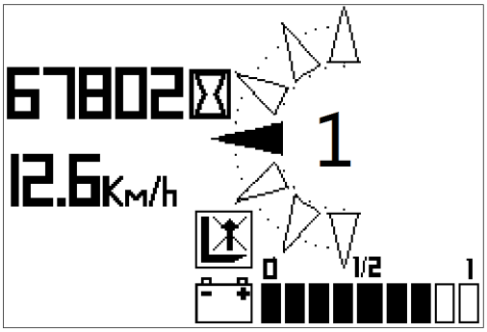

Figure 4-9-2 Meter display

(2) Safety switch and brake display: the truck is braked when travel switch is released. At that time the truck can not travel but it can steer, lift, moving forward and backward, tilt and the symbol on the meter is on all the time. When stepping on

the travel switch or foot safety switch, the truck can travel and the is off. The truck can travel and the lifting function is normal.

Press the button and light on the meter is on. At this time, the truck is under brake condition and the traction system of the truck can not work. press the button again, the light on the meter is off. At this time, the truck is stand by and traction system works.

(3) Battery electricity quantity display: there are 9 LED lights to shown the battery electricity quantity. When the truck gets electricity, the 9 LED lights are on when the battery is full. The LED lights reduces with the reducing of battery electricity quantity during discharging. When the battery electricity quantity is reduced to 15% that means only one LED is on, the fault alarm light and undervoltage alarm light will flicker at the same time. At this time, the truck will slow down and the lifting function is cut off in order to protect the battery. At this time, charge the battery in time.

Figure 4-9-4

(4) Hour meter: when the truck get electricity, the hour meter begins to work. Uses can maintain the truck according to the hours suggested in hour meter referring to the regulated maintenance time in OPERATION & MAINTENANCE MANUAL.

(5) Fault code display: if fault occurs, the symbol is on all the time. Fault code and control module code where fault occurs are shown in the diplay.

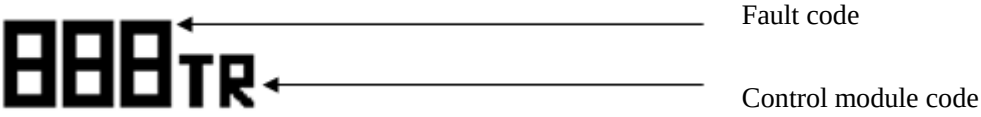

For the fault code and fault description, please refer to the fault diagnosis or consult HELI dealer. The definition of each control module is followed:

Control module code	Corresponding control module	Control module number
HY	VCM valve control	01
TR	Traction	02
PU	Lifting	05
ST	EPS-AC0	06
DI	Meter	16

Note: control module code is the electric control node number shown in the hand console.

D) Meter working environment

① altitude in working environment less than 1200m

② temperature in working environment: -25℃~+40℃

③ relative humidity less than 95%

3) Controller system introduction

Three ZAPI motor controller and one valve controller are installed on the truck to control truck traction, lifting system and steering system.

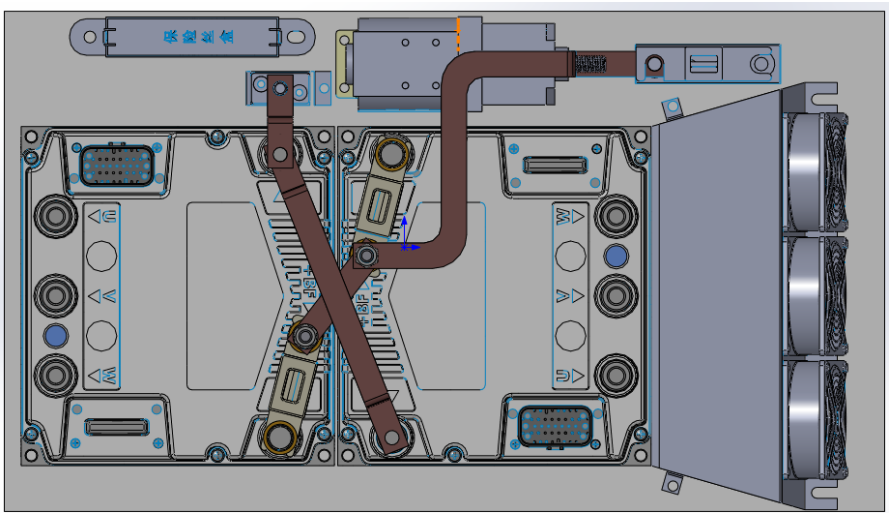

Figure 4-9-4 controller assembly

A) Traction and pump motor controller

Tractor motor controller type: ZAPI ACE2 48V/450A

Pump motor controller type: ZAPI SCE2 48V/500A

- ACE2 controller which is three phase AC asynchronism motor inverter controls traction motor and pump motor. It has regenerative brake function, CAN bus port and digital control function (based on motor speed feedback).
- Allowable working environment temperature: -30℃~+40℃， Max. allowable working temperature: 85℃.
- Protection function of the ACE2 traction motor controller:

  a) battery polarity protection b) incorrect connection protection

  c) over heat protection; overload protection; short circuit protection

  d) controller protection degree:IP65;

  e) out of control protection f) battery over discharging protection

  g) Mis-starting protection
- The following functions can be realized through controller's hand console:

  a) On line inspection and adjusting on traction and lifting control system

  b) On line correction on travelling accelerator and lifting speed adjusting signal

  c) Fault detection and inquiry on traction and lifting control system

B) Steering motor controller

Italy imported EPS-ACO controller is installed on the truck which applies advanced electric powered steering control system.

Steering motor controller type: ZAPI EPS-ACO 48V/45A

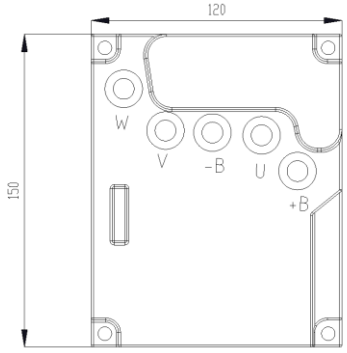

Figure 4-9-5 Steering motor controller

EPS-ACO controller applies high-frequency MOS technology. The control is not

only reliable but also efficient, low cost, smooth and mute.

EPS-ACO controller applies single-chip control system. It has perfect diagnostic and protection function. It can monitor electric inner ad outside component that affect the steering system all the time.

Electric limit protection on left and right steering limit position under 180° steering mode. It will protect automatically when exceeding limit position and it is reliable and safe.

EPS-ACO controller can achieves steering wheel automatic centering through function switch inching. And also the function can realized through turning on the electric lock.

● The working environment temperature should be in the range of -30℃-40℃. The highest work temperature that is permitted is 85℃.

● Protection function of the steering motor controller:

a) Battery polarity protection;

b) Over loaded and short circuit protection;

c) Protection degree of the controller: IP54

● Function achieved by hand manual:

a) On line check and adjusting of the steering control system;

b) On line fault check and query about the steering control system. It is convenient to maintain the system.

C) VCM valve controller

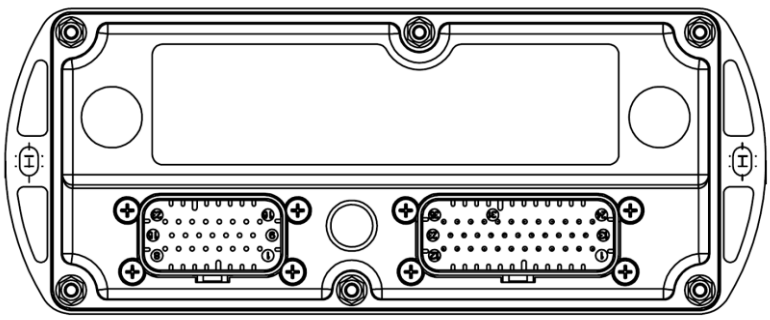

Figure 4-9-6 VCM valve controller

The truck adopts advanced solenoid valve control system and ZAPI VCM valve controller.

(1) VCM controller offers multiple digit and analog input terminals for the connection between inching switch and potentiometer;

(2) It has dual microprocessor and two CAN communication terminals;

(3) Its IP protection degree is 65.

(4) Allowable working temperature: -40℃~ +40℃;

(5) Functions:

a) 16 bit microprocessor is for main functions and safety function. It has 334KB flash memory;

b) There is 11 high level effective digit input terminal and 10 analog input terminal.

c) There are 2 progressive increasing encoder connectors.

d) There are 2 CAN communication connectors.

e) There are two power output terminals which are +12V and +5V respectively.

f) There are 8 output terminals controlled by current which can control the hydraulic valve accurately and proportionally. The terminal can stand a max. current of 2A.

g) There is a terminal offering a max. current of 4A.

h) There are 3 output terminals controlled by PWM voltage.

Note:

◆ Test the truck with four wheels raised after the controller being fixed, in that case there will be no danger even the connection is in error.

◆ A certain amount of voltage will remain in filter capacitance after the turn off of the electric switch. Cut off the battery and make the remained voltage short circuit by connecting the 10-100ohm resistance to the inverter before checking the inverter.

◆ Do not connect the controller to a battery that has a different voltage. The

high voltage will cause power unit error, while the low voltage will not make the logic card work.

◆ The quality is assured by the producer. When there is a fault, inform the producer of the after-sale service. Do not repair as will unless getting the permission from the producer. Or the user should bear the personal and property damage caused by the unauthorized repair by oneself.

4) Motor

Motor type: three phase AC type induction motor (free from maintenance)

	Driving motor	Pump motor	Steering motor
Power	7KW	15KW	0.6KW
Voltage	36/48V	36/48V	36/48V
Rated current	165A	436A	27A
Rotation speed	3930rpm	2027rpm	1350rpm

Note: Cut off the electricity before checking and maintaining the motors to avoid accident.

5) Battery

A) Battery construction and specifications

The battery is made up of + pole plate, - pole plate, separator, battery cover and electrolytic.

Battery specifications

Type	CQD16X1-GB2R	CQD18X1-GB2R
Capacity	E155	E155
Voltage	36V/48V	36V/48V
Electrolytic density	775Ah/440Ah	930Ah/550Ah
Cell number	18/24	18/24

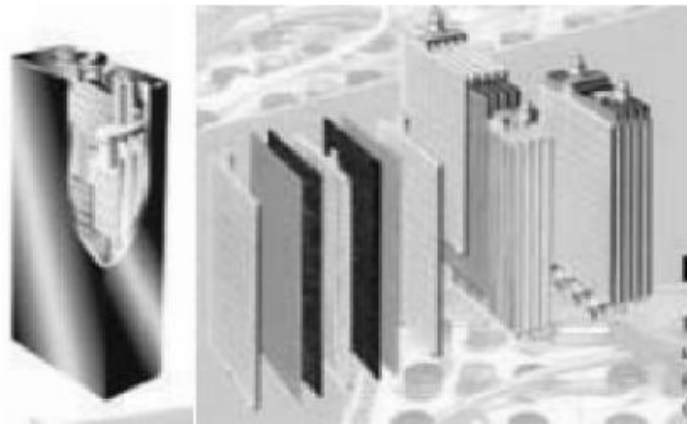

Fig. 4-9-7 battery construction

⏭ Note: Imported battery is optional.

B) The usage of battery

The usage and routine maintenance of the battery will influent battery life and performance. So the operator should maintain the battery according to the manual and actual conditions.

C) Battery maintenance

Maintain and check the battery regularly and carefully. So your truck can be more economical and reliable. Refer to the operation and service manual to avoid incorrect and unless operation.

①Keep the surface of the battery clean and dry. Take care of the bolts, poles and connectors, it there is a loose or poor contact, adjust it.

②Do not put any conductor on the battery set to avoid a short circuit.

③The first charging of the battery is called first charging, while the other charging is called common charging. The charging time varies with the battery capacity and using degree. In normal conditions, if the usage degree is 70%-100%, charge the battery 8-12 hours.

④ When charging, open the cap of the fluid adder. Close it after charging.

⑤Keep the ventilation well and keep the fire away from the battery because of the giving out of the oxyhydrogen.

⑥The electrolytic lever will decrease and the density will increase as the

evaporation and electrosis of the water in the electrolytic when charging. Add the distilled water regularly to keep the electrolytic lever and density.

⑦Avoid over charging and over use of the battery which will affects the battery life.

⑧Charge the battery in time (in 24 hours after use). The performance of the battery will drop caused by the vulcanizing of the pole plate if the battery is not charged in time, over charged, over used and not recharged after a long time of no using.

⑨Make a balanced charging every month during the usage to keep the single of the battery works well.

D) Battery storage and keep

①Store the battery in a clean, dry and well ventilated warehouse. Keep the temperature in a range of 5℃-40℃.

②Avoid exposing under the sunshine and drenching in the rain. Keep the battery more than 2M away from the heat source.

③Do not keep the battery upside down, or side or tossed or rolled, nor pressed heavily.

④ Keep the poisonous and corrosive goods away from the battery. No metal and substance should be dropped into the battery.

⑤Do not store the battery with electrolytic. When it is necessary to do so, they should be fully charged, charge the battery and adjust the electrolytic lever and density. In storage time, charge the battery once a month in the normal charging way.

Note:

- **Stop charging when the temperature of the electrolytic is above 40℃.**
- **The life of the battery will be affected when the temperature of the electrolytic is above 50℃.**
- **Do not charge the battery in low temperature (such as cold outside)**

which will affects the battery life.

Note:

● The rated voltage of the battery is not the safe voltage. Look out for a electric shock.

● The battery is lead acid battery which electrolytic is dilute sulfate. Wear protection tools when testing, adding and adjusting to avoid accidents.

● The case of the battery is conductor. Make sure the grounding wires in well connected to avoid a electric shock.

● Avoid pulling out the connector before the turning off of the charger. In that case, the spark will be created because of the inadequate charging.

E) Battery error and resolution

The cause that made the battery error is various, except the effect of the quality manufacture and transport storage, mostly due to the improper maintenance. Find out the faults and analyze the causation as soon as possible to exclude.

The characteristics of faults, causation and repair measure are bellowed;

fault	Characteristics	Causation	Repair measure
Pole plate sulfide	1) decrease of the battery capacity 2) low density of the electrolytic (below the normal lever) 3) High battery voltage when beginning or finishing the charging. 4) high rising of the electrolytic temperature when charging 5) air bubble in the early time of charging or beginning	1) Inefficient first charging 2) Inefficient charging for a long time 3) Discharging for many times 4) No timely charging after discharging 5) High density of the electrolytic 6) Low lever of electrolytic 7) No timely balanced charging 8) Too low or high discharging current 9)Impure of the	1) Adopt the measure of balanced charging when the actuality is not severity 2) Adopt the hydrotherapeutics when the actuality is severity 3) Do not over discharging 4) The density of the electrolytic should below the regular lever. 5) the lever of the electrolytic and content of the impurity should be

		electrolytic 10) Inside short circuit or electric leakage	in the prescribed range.
Inside short circuit	1) low battery voltage or close to zero indeed when charging 2) few or no air bubble at the end of the charging 3) high rising of electrolytic temperature or slow or no rising of electrolytic density 4) Low battery voltage under the condition of open circuit or a quick drop to the limit value when discharging 5)Serious self-discharging	1) curve pole plate; expanded reactive matter; desquamated reactive matter 2) Much precipitate 3) Falling of conductor to the battery	1) Replace the plate. 2) Clean the precipitate and conductor. 3) Replace the plate.
Shedding off of the reactive matter	1) Decrease of the battery capacity 2) Turbid electrolytic 3) Much precipitate	1) Being unsuitable to the electrolytic quality standard 2) Frequent discharging and charging or over charging or discharging 3)High .electrolytic temperature when charging 4) Outside short circuit when discharging	1) Clean the precipitate when the actuality is not severity. 2) Discard when severity.

6) Panel switch

Switches on the panel can be on or off according to the customer's choose.

: When the two buttons are pressed, the steering wheels return to center position automatically.

: press the button, the light on the meter turns on and the truck is under brake condition, the traction system does not work. Press the

button again, the Ⓟ light on the meter turns off and the truck is standby, the traction system works.

7) Steering proximity switch

The steering proximity switch is of NPN type and the sensing distance is 3-5mm. when the proximity switch is on, yellow indicator at the tail of the switch turns on. If automatic centering can not be realized when turning on the key switch, check if the proximity switch is in the sensing distance or is damaged.

4.9.3 Diagnosis

1) General instruction

The traction control system, loading control system, steering control system and intelligent instrument system assembled in the truck are continually monitoring micro-processor controller. They all have a diagnosis program to a main function. The program includes the following point:

(1) diagnosis when the electric lock being off: the circuit of the watching dog, current censor, charging of the capacity, phase voltage, driving of the connector, can-bus connector, the order of the switch operation, the output of the acceleration, the synchronism of the two micro-processor, the input of the hardware that having something to do with the safety.

(2) The alternate check； The circuit of the watch dog, phase voltage, current censor, driving of the connector, can-bus connector

(3) Check when working: the circuit of the watch dog, the driving of the connector, the current sensor, can-bus connector

(4) Continuously check: inverter temperature, motor temperature

Ways of diagnosis: the digital hand manual which can supply detailed diagnosis information; the can-bus which will send fault code and the code and module node will display in the meter.

2) Traction system common fault (TR node displayed on meter)

Fault	Meaning	explanation	Remedy

code			
13	EEPROM KO	Damage of programmable memorizer	Fault in the area of memory in which the adjustment parameters are stored; this alarm inhibits machine operation. If the defect persists when the key is switched OFF and ON again, replace the logic. If the alarm disappears, remember that the parameters stored previously have been cancelled and replace by the default values.
17	LOGIC FAILURE #3	LOGIC FAILURE #3	Fault in the hardware section of the logic board which manages the hardware current protection. Replace the controller.
18	LOGIC FAILURE #2	LOGIC FAILURE #2	Fault in the hardware section of the logic board which manages the Phase's voltage feedback. Replace the controller.
19	LOGIC FAILURE #1	LOGIC FAILURE #1	This alarm signals that an undervoltage /overvoltage protection operation has occurred. The voltage detected by controller higher than 65V or lower than 11V. Possible causes: 1. Short circuit in electric system, such as DC-DC, brake coil or check if the controller input power to earth is well connected. 2. Over low or over high of battery voltage 3. Check if the cables on binding post such as B+, B and main contactor are firmly connected. 4. Check if the calibration parameter of the controller voltage agrees with the actual voltage. 5. Fault of logic board hardware electric circuit on over voltage protection, change controller
30	VMN LOW	VMN LOW	MOS high-end voltage lower than 66% of compactor voltage or lower than the required value during running Possible causes: 1. incorrect wiring or fault of motor circuit; check if the three phase connecting of the motor is correct; check if the motor to earth leaks; check if the motor coil has broken circuit. 2. Check if the main contactor is firmly connects and the connecting points are worn. 3. Change controller
31	VMN HIGH	VMN HIGH	When turning on the key switch, MOS lower end voltage is higher than 10% of the normal battery voltage or phase voltage higher than 1/2 of the battery voltage. Possible causes: 1. incorrect wiring or fault of motor circuit; check

			if the three phase connecting of the motor is correct; check if the motor to earth leaks; check if the motor coil has broken circuit. 2. Change controller
37	CONTACTOR CLOSED	CONTACTOR CLOSED	The controller checks if the main contactor contact is closed when the coil isn't driven, trying to discharge the capacitor bank. If the capacitor voltage decreases by 20% of the battery, the fault condition is entered. 1. It is suggested to check the contactor contact, if it is mechanically stuck or pasted or change the contactor.
38	CONTACTOR OPEN	CONTACTOR OPEN	The main contactor coil has been driven by the logic board, but the contactor doesn't close. Two possible reasons: 1. mechanical fault of contactor; 2.The wires to the coil are not well connected. 3.Change the controller if the contact is normal.
53	STBY I HIGH	HIGH STANDBY CURRENT	The output signal of the current sensor tested by micro-control system exceeds the allowable range of the non-running current. Change the controller.
60	CAPACITOR CHARGE	Incorrect capacitor charging	When the key is switched ON, the inverter tries to charge the capacitor through a power resistance, and check if the capacitor is charged within a timeout. If this is not true and capacitor voltage is less than 20% of the battery voltgae: an alarm is signaled; the main contactor is not closed. Possible reasons: Possible reasons: 1. Outskirt equipments such as DC-DC, motor and other equipments affect controller charging. Remove these disturbances. 2. The charging resistance, charging circuit and power module has fault. Change the controller.
62	TEMPERAURE	High temperature	The controller temperature is higher than 85℃ when total power is allowed. (the temperature is related to parameter "MAXIMUM CURRENT"）. Corresponding relations: Parameter setting alarm temperature MAXIMUM CURRENT=50% 96℃ MAXIMUM CURRENT=60% 94℃ MAXIMUM CURRENT=70% 92℃ MAXIMUM CURRENT=80% 90℃ MAXIMUM CURRENT=90% 88℃ MAXIMUM CURRENT=100% 86℃

			The max. current of the controller reduces with the increasing of temperature. when the temperature is 105℃， the controller current is reduced to 0. If the fault occurs when the chopper is cold: 1. Logic board temperature calibration parameter is not right, check the parameters. 2. fault of controller internal temperature sensor, change the controller.
65	MOTOR TEMPERAT.	High motor temperature	Fault occurs when the motor temperature digital switch turns on or analog signal exceeds cut off value. When the motor temperature reaches to 120℃，the truck still can travel but truck performance degrades because the max. current is reduced. when the temperature reaches to 125℃， the motor stops working. At this time, cool the motor. If the fault still occurs when the motor is cold, check the wirings. If all are ok, change the controller.
66	BATTERY LOW	Battery electricity quantity low	If the Battery check function is not 0, when the battery electricity quantity is lower than 15% and there is no LED bar meter, fault alarms and the lifting function is locked. Charge the battery then. If the battery has electricity, check if the value of " ADJUST BATTERY" agrees with the battery voltage.
74	DRIVER SHORTED	Driver short circuit	When the key is turned off, the microprocessor will check if the driver of the main contactor has short circuit. if there is short circuit, it alarms. Check if the main contactor coil positive pole has short circuit to A16 or negative pole. If all are right, change the controller.
75	CONTACTOR DRIVER	Fault of contactor driver	The main contactor coil can not be driven normally. If the main contactor's coil has no fault, change the controller.
78	VACC NOT OK	Accelerator fault	The test is made in standby. This alarm indicates that the accelerator voltage is 1V greater than the minimum value programmed by the PROGRAM VACC function. Possible causes: 1. Accelerator voltage max. value and min. value have not collected. Enter into PROGRAM VACC to collect them again. 2. Accelerator fault. The accelerator does not return or the inner side of the accelerator has fault. 3. controller fault
	INCORRECT	Incorrect	This alarm signals an incorrect starting sequence.

79	START	starting sequence	Possible causes: A) Direction switch is turned off before truck starting B) Error in sequence made by operator C) Incorrect wiring D) If the default persists, replace the logic
80	FORW+BACK	Forward and backward signal exist at the same time	The test is carried out continuously. An alarm is signaled when a double running request is made simultaneously. Possible causes: A) Defective wiring B) Direction switch failure C) Incorrect operation D) If the defect persists, replace the controller
82	ENCODER ERROR	Encoder error	Two consecutive readings of the encoder speed are two much deferent in between: because of the inertia of the system it is not possible the encoder changes its speed a lot in a short period .Probably an encoder failure has occurred (e.g. one or two channels of the encoder are corrupted or disconnected).Check both are electric and the mechanical encoder functionality. Also the electromagnetic noise on the sensor bearing can be a cause for the alarm. Man-made operation can also cause the fault, so restart the truck. for example for the following operations: 1. Truck runs into barriers suddenly and the truck can not travel; 2. Brake suddenly when travelling with high speed;
220	PROG VACC NOT OK	Accelerator programming fault	If the “2.5 POT” is programmed to be “ON”, the controller will check the recorded maximum value and minimum value of the potentiometer when programming. If the forward minimum value is lower than the backward maximum value, or the backward minimum value is higher than the backward maximum value or the backward minimum value is higher than the foreword maximum value, the fault occurs. Check if the potentiometer is ok or recollect the data.
222	WAITING FOR NODE	Wait for node signal	One controller receives a signal that the other signal can no t work normally and the controller is under waiting condition until all CAN bus are ok. Check the unable communicating module wiring; check its software edition and programming.
223	WATCHDOG #1	Watchdog fault 1	The watchdog is activated before the software is started when starting. The watchdog signal is out of effect in spare use or travelling condition.

			Watch dog hardware electric circuit or microcontroller output part are damage. Change the controller.
224	COIL SHORTED EF	Auxiliary coil short circuit	When the electromagnetic connected to Can#18 output terminal or the auxiliary coil has fault, the fault occurs. After excluding overload condition, fault is solved through releasing brake, and thus travel request is valid. Fault analysis: generally the fault means the fault occurs at the harness or loading coil. So check the connection between controller output and load. If the outside load does not has fault, then the controller interior had fault, change the controller.
227	WATCHDOG #2	Watchdog fault 2	The watchdog is activated before the software is started when starting. The watchdog signal is out of effect in spare use or travelling condition. Watch dog hardware electric circuit or microcontroller output part are damage. Change the controller.
228	TILLER OPEN	Switch open	When the input switch is open, the main contactor opens after about 30s and the fault occurs. The fault disappears in next travelling.
229	SAFETY INPUT	Safety input fault	When the safety input switch is open, the main contactor opens and electromagnetic or auxiliary output coil is driven. Check if the connection of A11 is correct. If all outskirt is all right, change the controller.
230	COIL SHORTED MC	Main contactor coil short circuit	Reason: when short circuit coil of the main contactor is connected to can#16 output terminal, the fault occurs. The fault disappear after the over load is removed through releasing brake. Then the travelling request is valid. Fault analysis: generally, the fault means the fault occurs at harness or load coil, so check the connection between the controller output and load. If the outside load does not has fault, then the controller interior had fault, change the controller.
231	COIL SHORTED HW KO	Coil protection circuit fault	Short circuit of circuit to drive the main contactor, electromagnetic brake or auxiliary device Fault analysis: change the controller
232	KEYOFF SHORTED	Key switch short circuit	During start stage, when the contactor detects low logical level signal when the key switch is open, the fault occurs. Fault analysis: it may be caused by low voltage. - Key switch is based on outside load (such as the start of DC-DC converter; the input signal of relay or contactor is lower than start voltage.)

			- Check the connection between the power cable and battery positive and negative pole and the connection between the main contactor and controller's -BATT、+BATT. Connect with screw and the tighten torque is 13Nm÷15Nm. - If pressure drop is not detected on electric supply circuit, fault will occurs each time when the key switch is on. Fault may occur on controller hardware, change the controller.
233	POWER MOS SHORTED	Power MOS short circuit	Before the main contactor is closed, the software will check the electric bridge and convert it to MOS lower end power and the phase voltage is reduced to -BATT（increase to +BATT），if the change of phase voltage disagrees with instruct, fault occurs and change the controller.
235	HANDBRAKE	Hand brake switch fault	When travelling request is sent out, hand brake input signal is valid. The possible causes are: Damage of hand brake switch or wiring is incorrect; The hand brake switch is all right. In TESTER menu, the hand brake is ON all the time, change the controller.
236	CURRENT GAIN	Current gain fault	The max. current gain parameter is factory setting value. It means the max, current adjusting parameter program is not yet operated. Remedy: HELI technician set the correct program on current gain parameter.
237	ANALOG INPUT	Analog signal input fault	When A/D input by all analog signal is converted into a fixed value, the fault occurs. Delayed time exceeds 400 millisecond. The fault is used to detect A/D converter fault or analog signal conversion. Fault analysis: if fault exists all the time, change the controller.
238	WRONG ZERO VOLTAGE	Zero voltage fault	VAM high terminal voltage feedback voltage is very higher or lower than 2.5V, that means the controller circuit is broken. Check the following items: Motor inner side connection Motor power cable connection Drain current between motor and truck external case If motor is well connected, the interior of the controller has fault, change the controller.
239	SAFETY OUTPUT	Safety output fault	Safety output drive short circuit Check if there is short circuit between A19 and –BATT or low impedance discourages output. Logic card

			driver's electric circuit has fault. Change the controller.
240	HARDWARE FAULT	Hardware electric circuit fault	Before driving main contactor coil, the controller detects MOS drive or auxiliary output drive is invalid watchdog electric circuit signal. If it is not driven, fault occurs. Change the controller.
241	FLASH CHECKSUM	Flash memory fault	After the key is turned on, the program in flash memory is positive value. Fault occurs when it is negative value. Fault analysis: it is the fault of flash memory. The flash memory may be damaged. Or the memorized program is damaged. Try to reset the logic card program. If fault still occurs, it is the fault of microcontroller. Change the controller.
242	ENCODER LOCKED	Encoder feedback signal fault	Normally, if target speed is higher than 10hz and the motor speed is higher than 1.5hz, the encoder feedback signal should be higher than a set value. If it is not like this, the controller alarms. Check the encoder, motor, motor wiring, installment way. If all are right, change controller.
243	SENS MOT TEMP KO	Temperature sensor fault	Phenomenon: motor temperature sensor output signal exceeds range. Remedy: check sensor value and wiring condition. If all is right, the interior of the controller has fault.
244	SOFTWARE ERROR	Software fault	Causes of this fault are many, such as CAN bus fault, EEPROM FAULT and so on. check the "DEBUG MODE", it should be "OFF".
245	WRONG RAM MEMORY	Dynamic memory fault	Fault is detected when checking the main memory. The resisted address is "DIRTY". The fault will limit the operation of truck. Remedy: turn off the key switch and turn it on again. if fault still occurs, change the controller.
246	AUX DRIVER OPEN	Auxiliary output drive fault	Auxiliary coil drive circuit can not drive the load. the device itself or drive coil is damaged. Change the controller.
247	DATA ACQUISITION	Data acquisition	When adjusting current gain, fault alarms. Nothing need to be done. The fault will disappear after adjusting.
248	NO CAN MESSAGE	No CAN message	CAN communicating fault between pump and traction. Check the CAN wiring software setting and edition information.
	CHECK UP NEED	Maintenance	It is time to maintenance and check the truck.

249		time	
250	THERMIC SENS KO	Temperature sensor fault	The output signal of controller temperature sensor exceeds range. Change the controller.
251	WRONG SET BATTERY	Battery setting fault	When starting, controller checks battery voltage if it is within the nominal range. Check if the "BATTERY VOLTAGE" parameter in TESTER is the same with the value shown on the voltmeter. If they are not the same, adjust the battery voltage through "ADJUST BATTERY" to be the same with measured value. Change the battery.
253	SLIP PROFILE	Slip frequency fault	slip profile parameter select error. Check these values setting in hardware setting parameter.
254	AUX DRIVER SHORTED	Auxiliary driver short circuit	Electromagnetic brake or auxiliary electric brake's drive circuit has short circuit. Check if there is short circuit between A16 and –BATT or low impedance discourages output. Logic card's driver electric circuit has fault, change the controller.

3) Pump control system common fault (PU node displayed on meter)

Fault code	Meaning	explanation	Remedy
13	EEPROM KO	Damage of programmable memorizer	Fault in the area of memory in which the adjustment parameters are stored; this alarm inhibits machine operation. If the defect persists when the key is switched OFF and ON again, replace the logic. If the alarm disappears, remember that the parameters stored previously have been cancelled and replace by the default values.
17	LOGIC FAILURE #3	LOGIC FAILURE #3	Fault in the hardware section of the logic board which manages the hardware current protection. Replace the controller.
18	LOGIC FAILURE #2	LOGIC FAILURE #2	Fault in the hardware section of the logic board which manages the Phase's voltage feedback. Replace the controller.
19	LOGIC FAILURE #1	LOGIC FAILURE #1	This alarm signals that an undervoltage /overvoltage protection operation has occurred. The voltage detected by controller higher than 65V or lower than 11V.

			Possible causes: 1. Short circuit in electric system, such as DC-DC, brake coil or check if the controller input power to earth is well connected. 2. Over low or over high of battery voltage 3. Check if the cables on binding post such as B+, B and main contactor are firmly connected. 4. Check if the calibration parameter of the controller voltage agrees with the actual voltage. 5. Fault of logic board hardware electric circuit on over voltage protection, change controller
30	VMN LOW	VMN LOW	MOS high-end voltage lower than 66% of compactor voltage or lower than the required value during running Possible causes: 1. incorrect wiring or fault of motor circuit; check if the three phase connecting of the motor is correct; check if the motor to earth leaks; check if the motor coil has broken circuit. 2. Check if the main contactor is firmly connects and the connecting points are worn. 3. Change controller
31	VMN HIGH	VMN HIGH	When turning on the key switch, MOS lower end voltage is higher than 10% of the normal battery voltage or phase voltage higher than 1/2 of the battery voltage. Possible causes: 1. incorrect wiring or fault of motor circuit; check if the three phase connecting of the motor is correct; check if the motor to earth leaks; check if the motor coil has broken circuit. 2. Change controller
53	STBY I HIGH	HIGH STANDBY CURRENT	The output signal of the current sensor tested by micro-control system exceeds the allowable range of the non-running current. Change the controller.
60	CAPACITOR CHARGE	Incorrect capacitor charging	When the key is switched ON, the inverter tries to charge the capacitor through a power resistance, and check if the capacitor is charged within a timeout. If this is not true and capacitor voltage is less than 20% of the battery voltgae: an alarm is signaled; the main contactor is not closed. Possible reasons: Possible reasons: 1. Outskirt equipments such as DC-DC, motor and other equipments affect controller charging. Remove these disturbances.

			2. The charging resistance, charging circuit and power module has fault. Change the controller.
62	TEMPERAURE	High temperature	The controller temperature is higher than 85℃ when total power is allowed. (the temperature is related to parameter “MAXIMUM CURRENT”）. Corresponding relations: Parameter setting alarm temperature MAXIMUM CURRENT=50% 96℃ MAXIMUM CURRENT=60% 94℃ MAXIMUM CURRENT=70% 92℃ MAXIMUM CURRENT=80% 90℃ MAXIMUM CURRENT=90% 88℃ MAXIMUM CURRENT=100% 86℃ The max. current of the controller reduces with the increasing of temperature. when the temperature is 105℃， the controller current is reduced to 0. If the fault occurs when the chopper is cold: 1. Logic board temperature calibration parameter is not right, check the parameters. 2. fault of controller internal temperature sensor, change the controller.
65	MOTOR TEMPERAT.	High motor temperature	Fault occurs when the motor temperature digital switch turns on or analog signal exceeds cut off value. When the motor temperature reaches to 120℃， the truck still can travel but truck performance degrades because the max. current is reduced. when the temperature reaches to 125℃， the motor stops working. At this time, cool the motor. If the fault still occurs when the motor is cold, check the wirings. If all are ok, change the controller.
74	DRIVER SHORTED	Driver short circuit	When the key is turned off, the microprocessor will check if the driver of the main contactor has short circuit. if there is short circuit, it alarms. Check if the main contactor coil positive pole has short circuit to A16 or negative pole. If all are right, change the controller.
78	VACC NOT OK	Accelerator fault	The test is made in standby. This alarm indicates that the accelerator voltage is 1V greater than the minimum value programmed by the PROGRAM VACC function. Possible causes: 1. Accelerator voltage max. value and min. value have not collected. Enter into PROGRAM VACC to collect

			them again. 2. Accelerator fault. The accelerator does not return or the inner side of the accelerator has fault. 3. controller fault
79	INCORRECT START	Incorrect starting sequence	This alarm signals an incorrect starting sequence. Possible causes: D) Direction switch is turned off before truck starting E) Error in sequence made by operator F) Incorrect wiring D) If the default persists, replace the controller
82	ENCODER ERROR	Encoder error	Two consecutive readings of the encoder speed are two much deferent in between: because of the inertia of the system it is not possible the encoder changes its speed a lot in a short period .Probably an encoder failure has occurred (e.g. one or two channels of the encoder are corrupted or disconnected).Check both are electric and the mechanical encoder functionality. Also the electromagnetic noise on the sensor bearing can be a cause for the alarm.
221	SEAT MISMATCH	Seat switch signal fault	If the “SAFE OUT CONFIG” is 1 and the fault may alarms. When traction seat switch signal is different from the pump controller switch signal, the fault alarms. Check the seat switch wiring.
222	WAITING FOR NODE	Wait for node signal	One controller receives a signal that the other signal can no t work normally and the controller is under waiting condition until all CAN bus are ok. Check the unable communicating module wiring; check its software edition and programming.
223	WATCHDOG #1	Watchdog fault 1	The watchdog is activated before the software is started when starting. The watchdog signal is out of effect in spare use or travelling condition. Watch dog hardware electric circuit or microcontroller output part are damage. Change the controller.
227	WATCHDOG #2	Watchdog fault 2	The watchdog is activated before the software is started when starting. The watchdog signal is out of effect in spare use or travelling condition. Watch dog hardware electric circuit or microcontroller output part are damage. Change the controller.
229	SAFETY INPUT	Safety input fault	When the safety input switch is open, the main contactor opens and electromagnetic or auxiliary output coil is driven. Check if the connection of A11 is correct. If all outskirt is all right, change the controller.
	KEYOFF	Key switch	During start stage, when the contactor detects low

232	SHORTED	short circuit	logical level signal when the key switch is open, the fault occurs. Fault analysis: it may be caused by low voltage. - Key switch is based on outside load (such as the start of DC-DC converter; the input signal of relay or contactor is lower than start voltage.) - Check the connection between the power cable and battery positive and negative pole and the connection between the main contactor and controller's -BATT、+BATT. Connect with screw and the tighten torque is 13Nm÷15Nm. - If pressure drop is not detected on electric supply circuit, fault will occurs each time when the key switch is on. Fault may occur on controller hardware, change the controller.
233	POWER MOS SHORTED	Power MOS short circuit	Before the main contactor is closed, the software will check the electric bridge and convert it to MOS lower end power and the phase voltage is reduced to -BATT（increase to +BATT），if the change of phase voltage disagrees with instruct, fault occurs and change the controller.
237	ANALOG INPUT	Analog signal input fault	When A/D input by all analog signal is converted into a fixed value, the fault occurs. Delayed time exceeds 400 millisecond. The fault is used to detect A/D converter fault or analog signal conversion. Fault analysis: if fault exists all the time, change the controller.
238	WRONG ZERO VOLTAGE	Zero voltage fault	VAM high terminal voltage feedback voltage is very higher or lower than 2.5V, that means the controller circuit is broken. Check the following items: Motor inner side connection Motor power cable connection Drain current between motor and truck external case If motor is well connected, the interior of the controller has fault, change the controller.
239	SAFETY OUTPUT	Safety output fault	Safety output drive short circuit Check if there is short circuit between A19 and –BATT or low impedance discourages output. Logic card driver's electric circuit has fault. Change the controller.
240	HARDWARE FAULT	Hardware electric circuit fault	Before driving main contactor coil, the controller detects MOS drive or auxiliary output drive is invalid watchdog electric circuit signal. If it is not driven, fault occurs.

			Change the controller.
241	FLASH CHECKSUM	Flash memory fault	After the key is turned on, the program in flash memory is positive value. Fault occurs when it is negative value. Fault analysis: it is the fault of flash memory. The flash memory may be damaged. Or the memorized program is damaged. Try to reset the logic card program. If fault still occurs, it is the fault of microcontroller. Change the controller.
242	ENCODER LOCKED	Encoder feedback signal fault	Normally, if target speed is higher than 10hz and the motor speed is higher than 1.5hz, the encoder feedback signal should be higher than a set value. If it is not like this, the controller alarms. Check the encoder, motor, motor wiring, installment way. If all are right, change controller.
243	SENS MOT TEMP KO	Temperature sensor fault	Phenomenon: motor temperature sensor output signal exceeds range. Remedy: check sensor value and wiring condition. If all is right, the interior of the controller has fault.
244	SOFTWARE ERROR	Software fault	Causes of this fault are many, such as CAN bus fault, EEPROM FAULT and so on. check the “DEBUG MODE”, it should be “OFF”.
245	WRONG RAM MEMORY	Dynamic memory fault	Fault is detected when checking the main memory. The resisted address is “DIRTY”. The fault will limit the operation of truck. Remedy: turn off the key switch and turn it on again. if fault still occurs, change the controller.
247	DATA ACQUISITION	Data acquisition	When adjusting current gain, fault alarms. Nothing need to be done. The fault will disappear after adjusting.
248	NO CAN MESSAGE	No CAN message	CAN communicating fault between pump and traction. Check the CAN wiring software setting and edition information.
249	CHECK UP NEED	Maintenance time	It is time to maintenance and check the truck.
250	THERMIC SENS KO	Temperature sensor fault	The output signal of controller temperature sensor exceeds range. Change the controller.
251	WRONG SET BATTERY	Battery setting fault	When starting, controller checks battery voltage if it is within the nominal range. Check if the “BATTERY VOLTAGE” parameter in TESTER is the same with the value shown on the voltmeter. If they are not the same, adjust the battery voltage through

			"ADJUST BATTERY" to be the same with measured value. Change the battery.
253	SLIP PROFILE	Slip frequency fault	slip profile parameter select error. Check these values setting in hardware setting parameter.

4) Steering system common fault (ST node displayed on meter)

Fault code	Meaning	explanation	Remedy
6	SERIAL ERR #1	Main uC and slave uC communicate via a local serial interface, this alarm occurs when the slave uC does not receive communication from the main uC through this serial interface.	Change the controller
13	EEPROM KO	It occurs if a test or write and read on location in EEPROM fails. The SW expects to read the written value. It occurs also when the hour counter gives different values between the three redundant locations in which it is recorded. It occurs also when the busy bit of the EEPROM does not rise within 12s.	Change the controller
16	LOGIC FAILURE #4	This alarm occurs in the rest state if the output of the voltage amplifilter of the phase Vw-Vv have a drift larger than ±0.25V.	Change the controller
17	LOGIC FAILURE #3	This alarm occurs in the rest state if the output of the voltage amplifilter of the phase Vu-Vw have a drift larger than ± 0.25V.	Change the controller
18	LOGIC FAILURE #2	This alarm occurs when the real voltage between phase W and V of the motor is different from the desired.	Change the controller

19	LOGIC FAILURE #1	This alarm occurs when the real voltage between phase W and U of the motor is different from the desired.	1. Check the battery； 2. Change the controller.
32	VMN NOT OK	This alarm occurs in the initial rest state after key on if the outputs of the motor voltage amplifiter are not in the window from 2.2 to 2.8V.	
48	MAIN CONT.OPEN	This alarm occurs when the setting CAN bus is present, then the eps-ac0 waits for a via CAN information that the traction controller has closed the main contactor. If this information lacks more than about 1.5s, this alarm occurs.	In traction controller the main contactor is disconnect.
53	STBY I HIGH	This alarm occurs two ways: 1) in the initial rest state after key on, if the outputs of the current amplifilter are not comprissed in the window 2.2 to 2.8v. 2) after the initial diagnosis this alarm occurs when the outputs of the current amplifilter at rest have a drift larger than ± 0.15v.	Change the controller
61	HIGH TEMPERATURE	This alarm occurs if the temperature of the controller base plate overtakes 75℃.	Improve cooling or change the controller.
65	MOTOR TEMPERATURE	When DIAG MOTOR TEMP is set as ON and the temperature is higher than 150 ° measured by temperature sensor in motor, it will alarms.	1. Check if the temperature sensor is ok. 2. if it is ok, improve the cooling device.
70	HIGH CURRENT	High current	Check if the motor is suitable for EPS-ACO, or change the controller.
71	POWER FAILURE #3	The V phase of the motor is 0 and the motor is working, it alarms.	Check if the power fuse is ok; check if the positive pole is connected to the controller; check if the V phase is well connected; or change the controller.

72	POWER FAILURE #2	The U phase of the motor is 0 and the motor is working, it alarms.	Check if the power fuse is ok; check if the positive pole is connected to the controller; check if the U phase is well connected; or change the controller.
73	POWER FAILURE #1	The W phase of the motor is 0 and the motor is working, it alarms.	Check if the power fuse is ok; check if the positive pole is connected to the controller; check if the W phase is well connected; or change the controller.
83	BAD ENCODER SIGN	Motor loading frequency disagrees with motor actual speed.	1. Check the motor U/V/W phase order and change if necessary. 2. Check encoder A/B phase order, change if necessary.
84	STEER SENSOR KO	Potentionmeter voltage is not continuous.	Double potentionmeter fault (CPOC1connected to CNA#9 and CPOC2 connected to CNA#8）; bigger than MAX SP SLOPE, it alarms. Change the double potentionmeter.
85	STEER HAZARD	It warns operator. Steering controller limits steering angle but does not lower travelling speed.	
99	INPUT ERROR #1	Safety switch CAN#4 terminal voltage is higher than 12V before safety switch connects.	
212	CLOCK PAL NOT OK	The main Uc encoder disagrees with slave uC encoder.	Change the controller
212	MICRO SLAVE #8	The main Uc encoder disagrees with slave uC encoder.	Change the controller
219	STEPPER MOTOR MISM	If the leading wire of D and Q are connected incorrectly, it will alarm. Normally, the voltage range increases and its frequency will increase.	Change the controller
220	MOTOR LOCKED	It will alarm when the max. current of the steering motor’s lasting time exceeds 1s.	The motor is locked: 1. Check the motor U,V and W phase order. 2. Check steering motor encoder A/B phase position. 3. Test motor current and check if there is mechanical problem. Set DEBUG OUTPUT as level 11 for

			the convenient of finding fault.
221	MICRO SLAVE #4	From microcontroller # 4 fault The motor rotor voltage phase number is on the contrary of stepping motor speed signal.	1. Check stepping motor wiring and check if there is water going in. 2. Check if steering motor cable is bonding with truck body. 3. Change the controller.
222	FB POT LOCKED	Steering encoder has no feedback.	If motor stops after rotating a certain angle after starting the truck and then it alarms: 1. Check the steering motor encoder harness. 2. Check steering controller power. If the motor does not rotate after starting the truck and it alarms: 1. check the resistance between EPS U/V/W phase and B+ and B-, check if the controller power unit is damaged. 2. check if the steering motor winding is damaged. Set DEBUG OUTPUT as LEVEL 11 for convenient of finding fault.
223	JERKING FB POT	Feed back potentionmeter Voltage is discontinuous.	Feedback potentionmeter (conneted to CNB#6’s COPT) changes in 16 MS exceed 0.3V and it alarms. Change the feedback potentionmeter.
225	CURRENT GAIN	The parameter is used to compensate current ampilifilter parameter（ADJUSTMENT#3 and ADJUSTMENT#4）	The alarm disappears after the fault is solved.
226	NO SYNC	Every 16ms, inside the code cycle, the main uC rises and then lowers an input for the slave uC. When the slave uC detects no edge for more than 100ms on this input , this alarm occurs, this is just a watch dog function . when the main uC does not execute the code cycle it does not update the SYNC signal and the slave uC cuts off the steer and traction.	Change the controller

227	SLAVE COM. ERROR	Main uC and slave uC communicate via a local serial interface. This alarm occurs when the main uC does not receive the communication from the slave uC through this series interface.	Change the controller
228	POSITION ERROR	Encoder count does not match the wheel position and it alarms.	When centering switch is used with feedback encoder and the FEEDBACK ENC menu and FEEDBACK SECTOR disagree. 1. Check the steering proximity switch power. 2. Check the position of proximity switch and sensing iron block position.
237	WAITING DATA	When CAN BUS is PRESENT and the key switch is turned on, EPD-AC0 require travelling controller send parameter through CAN bus. from sending the request to receiving, it alarms all the time. At this time, steering is invalid and the safety relay is disconnected.	
238	EPS NOT ALIGNED	This is a real alarm that cut off the traction. It occurs at the initial alignment if the straight ahead condition is not matched within 6s. throughout this 6s delay, the steer is not activated yet, the safety relays are open and the traction is stopped.	Check if zero proximity switch can work normally. 1. Check the steering proximity switch power. 2. Check the position of proximity switch and sensing iron block position.
239	WAITING FOR TRAC	At key-on the EPS-AC0 nneds an assent from the traction controller to close the safety contacts and to turn onto operational mode. Until this assent is not relieved, this warning occurs. The steer is not activated yet and the safety relays remain open when this	

		warning is present.	
241	ENCODER ERROR	It occurs when ENCODER CONTROL is set ON and the real frequency does not pursuit the commanded frequency.	This condition is several times due to either, a mismatching between the encoder resolution used in the SW and the real encoder resolution, or a wrong connection between the two encoder channels.
242	Q LINE SENSOR KO	This alarm occurs when the mean voltage on the quadrature line of the stepper motor (connection CAN#8) is not null.	1. Check connection of quadrature line of stepper motor. 2. check the resistance between the battery negative pole and terminal 2A9. It should be lower than 30ohm. 3.change the stepper motor.
243	DLINE SENSOR KO	This alarm occurs when the mean voltage on the direct line of the stepper motor (connection CAN#8) is not null.	1. Check connection of direct line of stepper motor. 2. Check the resistance between the battery negative pole and terminal 2A9. It should be lower than 30ohm. 3. Change the stepper motor.
245	DATA ACQUISITION	The alarm occurs when the acquiring the motor resistance or when adjusting the parameters to compensate for the gain of the current amplifilter (max. current factory adjusted).	Recycle the key.
246	MICRO SLAVE KO	In stepper motor application, this alarm occurs of the main uC is detecting a direction of the stepper motor not matched with the one the slave uC is detecting. Furthermore, this alarm occurs also if the main uC is detecting no limitation meanwhile the slave uC is detecting a steering limitation.	Change the controller
247	CAN BUS KO	This alarm occurs only when the setting CAN bus is PRESENT. Then the EPS-AC0 must receive the event message from the traction controller. If these message lack more than about 1s, this alarm	Check the CAN bus communication system and analyze the frames from the traction controller to the steer controllers.

		occurs.	
248	S.P OUT OF RANGE	This alarm occurs for a fault on the command potentiometer (CPOC1 on CAN#9,CPOC2on can#8)	When a single command potentiometer is chosen, the alarm occurs if CPOC1 exits the rang from 0.8v to 4.2v. When the twin potentiometer is chosen, the alarm occurs if the sum of the two wiper voltages (CPOC1+CPOC2) exists the range from 4.5v to 5.5v. Check the connections of the potentiometer. This alarms occurs when one connection of the command potentiometer is broken.
249	FB OUT OF RANGE	This alarm occurs for a fault on the feedback potentiometer. (CPOT on CNB#6). This alarm occurs of CPOT exits the range from 0.3v to 4.7v.	Check the connection of the feedback potentiometer. This alarm occurs when one connection of feedback potentiometer is broken.
250	MICRO SLAVE	It occurs when the information on the status bus between the main uC and the slave uC is frozen to the 0xFF value (the slave uC does not update the status bus configuration).	Change the controller
251	KM OPEN	This alarm occurs if the slave uC detects the safety contact, of the main uC, open when expected being closed.	Change the controller
252	KS CLOSED	This alarm occurs if the main uC detects the safety contact, of the slave uC, open when expected being closed.	Change the controller
253	KM CLOSED	This alarm occurs if the slave uC detects the safety contact, of the main uC, closed when expected being open.	Change the controller
254	KS CLOSED	This alarm occurs if the main uC detects the safety contact, of the slave uC, closed when expected being open.	Change the controller

5)Meter common fault ((DI node displayed on meter)

Fault code	Fault	Fault code	Fault
08	WATCHDOG	247	CAN BUS KO
13	EEPROM KO	248	HARDWARE FAULT
76	COIL SHORTED	249	SERVICE REQUIRED
82	ENCODER ERROR	250	ANALOG INPUT
242	FREE LFT SENS KO	251	HM SYNC.FAILED
243	SENSOR 0 KO	252	HM SYNC.FAILED
244	CAN BUS KO PUMP	253	LIFT SENS MISM
245	AUX DRIV.OPEN	254	REACH SENS MISM
246	AUX DRIV.SHRT		

6) Intelligent display fault analysis

“EEPROM KO”

“EEPROM KO” not means to forbid truck from travelling; it makes the truck work with the factory settings. If the fault “EEPROM KO”still occurs after restart the key switch, change the intelligent display. If the fault “EEPROM KO”disappears, the factory settings will replace the parameters memorized before.

“CANBUS KO”

Intelligent display can not receive message from can bus line.

Troubleshooting:

If the fault code is displayed together with other alarm information, the fault is probably to be looked for in the display CAN interface since the display seens to be unable to receive any can message. So it is suggested to check intelligent canbus wiring and connection.

Otherwise, the fault is in the can interface of other module present on canbus network.

“SERVICE REQUIRED”

It is due to maintain the truck.

“COIL SHORTD”

This alarm occurs when there is a short circuit of the coil connected to output, so

over current is produced on relative driver.

Troubleshooting:

----check if the connected load is burnt or short circuit;

----check the relative wirings

----if the fault occurs when the load wirings are disconnected, it means the big current protection circuit of the intelligent display is damaged, change the display.

7) Valve controller common fault (HY node showed on meter)

Main controller code

Code	Fault	Code	Fault
08	WATCHDOG	224	WAITING FOR NODE
19	LOGIC FAILURE	225	CONTROLLER MISM.
200	WRONG PARAMETER	226	PUMP IN ALARM
202	WRONG SALVE VER	227	NO CAN MSG.14
204	HM MISMATCH	228	NO CAN MSG.A
208	BATTERY LOW	229	SDO TRAC.
209	PARAM RESTORE	241	M/S PAR CHK MISM
210	WRONG RAM MEM.	242	PARAM TRANSFER
211	PUMP INC.START	244	CHECK UP
213	ENCODER LOCKED 1	246	NO CAN MSG C
214	ENCODER LOCKED 2	247	NO CAN MSG 6
215	OUT PORT PULL-UP	248	NO CAN MSG 10
217	ANALOG INPUT	249	CAN BUS DISPLAY
219	VALVE ENABLE		
223	NO CAN MSG.5		

Subordinate controller code

Code	Fault	Explanation	Remedy
08	WATCHDOG	Watchdog fault	
19	LOGIC FAILURE #1	LOGIC FAILURE #1	
199	OUT1/2 COIL SH.	Short circuit of coil 1 and 2	Check if lifting and lowering solenoid valve and outskirts wirings short circuit.
200	OUT3/4 COIL SH.	Short circuit of coil 3 and 4	Check if lifting and lowering solenoid valve and outskirts wirings short circuit.
201	OUT5/6 COIL SH.	Short circuit of coil 5 and 6	Check if lifting and lowering solenoid valve and outskirts wirings short circuit.

202	OUT7/8 COIL SH.	Short circuit of coil 7 and 8	Check if the lifting and lowering solenoid valve and outskirts wirings short circuit.
205	EVP9 COIL SH	Short circuit of the front wheel electromagnetic brake coil	Check if the front wheel electromagnetic brake coil and outskirts wirings short circuit.
211	PEV DRV.OPEN.	Open circuit of lifting and lowering solenoid valve coil	Change controller
212	PEV DRV.SHORT.	Short circuit of solenoid valve coil	Check if there is short circuit between 3A13 terminal and B+ or the resistance is small, change the controller.
215	OUT PORT PULL-UP	Incorrect hardware configuration	Change controller
217	ANALOG INPUT	Incorrect transition of controller A\D	Change controller
218	IN.MISM.D	Mismatch of main controller's digital quantity and subordinate controller's digital quantity	Change controller
219	IN.MISM.A/E	mismatch of main controller's analog quantity and subordinate quantity or encode signal	Change controller
223	NO CAN MSG.C	No CAN communication to traction controller	Check the connection between 3A11\3A12 and 1A20\1A21
224	NO CAN MSG.4	Overtime of CAN communication	Turn on the key switch again and if the fault still occurs, change the controller
225	CONTROLLER MISM	Incorrect control ID code in memory storage	Change controller

227	NO CAN MSG.14	No communication to pump controller	Check the connection between 3A11\3A12 and 2A20\2A21
231	DRV.SHRT A	Short circuit of solenoid valve's 1-8 drive terminal	Change controller
232	DRV.OPEN A	Open circuit of solenoid valve's 1-8 drive terminal	Change controller
243	COIL OPEN A	Open circuit of solenoid valve's coil	Check if the electromagnetic valve has open circuit or if the harness or connectors loose.
245	COIL OPEN EVP9	Open circuit of front wheel electromagnetic brake's coil	Check if the electromagnetic or outskirt harness has open circuit.
246	DRV. SHRT EVP9	Short circuit of front wheel electromagnetic brake's drive terminal	Check if the resistance between front wheel electromagnetic drive terminal B23 and B-is small or if there is short circuit, change controller.
247	DRV. OPEN EVP9	Open circuit of front wheel electromagnetic brake's drive terminal	Change controller

4.9.4 Routine maintenance

Check the wear and connect condition of the contactor point. Check it every three months.

Check the pedal and thumb switch. Make sure there is no resistance between two contactors with a proper universal electric meter when turning off .or on switches, make sure there is clear sound. Check the thumb switch every three months.

Check the cables of the battery, chopper and motor. Make sure they are insulate and well connected. Check the main cables every three months.

Check the pedal and the mechanical working of the thumb switch. Check the returning springs. Check whether the digital resistor can go to its max. value or its set value or not. Check them every three months.

Check the mechanical working of the contactor. Check whether there is a seizure or wear of the contactor point. Check them every three months.

Check should be done by skilled person only. All spare pats should be original. The installation of the controller should be done according to the manual strictly. Any change or special requirements can be done only after consulting our company. We will take no responsibility on the fault caused by the disparity between the dealer and the content of this manual.

Any cause which is visible or reliable by an ordinary technician who periodically checks the equipment, which can create damage or defects to the device, should be transferred to our dealer. Our dealer will carry out a purposeful handling.

Appendix : electric system principle diagram

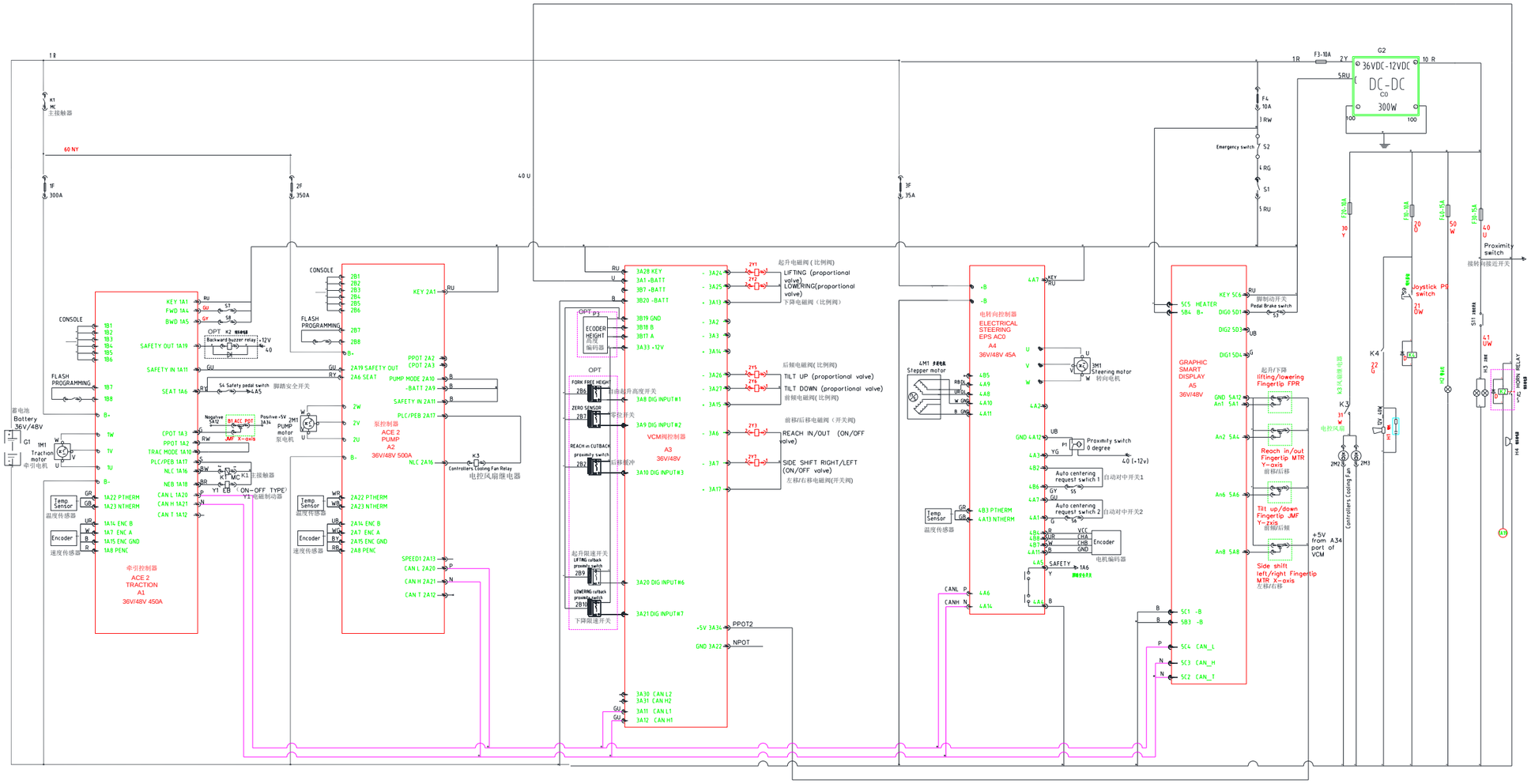

代号	名称	英文名称
G1	ma	Battery
K1	cont	Main contactor
K2	cont	Backward relay
K3	contcont	Controllers Cooling Fan Relay
F1	fuse	Fuse main circuit
F2	fuse	Fuse drive controller
2F	fuse	Fuse pump controller
3F	fuse	Fuse EPS controller
F3	DC-DCfuse	Fuse DC/DC
F4	fuse	Fuse key switch circuit
F5h	fuse	Fuse horn
F2h	fuse	Fuse cooling fans
F3h	fuse	Fuse head light
F4h	fuse	Fuse caution light
A1	cont	Traction controller
A2	cont	Pump controller
A3	cont	Micro Touch controller
A4	equip	Electric steering controller

代号	名称	英文名称
A5	m	display
1M	mo	Traction motor
2M	mo	Pump motor
3M	mo	Steering motor
4M	mo	Stepper motor
S1	sw	Key switch
S2	sswit	Emergency switch
S4	swit	Pedal Brake switch
S6	sswit	Safety pedal switch
S7	swit	Forward/reverse request switch1
S8	switch	Forward/reverse request switch2
S7	swit	Forward switch
S8	swit	Backward switch
S9	SW	Horn switch
U1	DC/DCconverter	DC/DC converter 36V/12V
U2	chock	Chockoff switch
S12	sws	Parking Brake switch

代号	名称	英文名称
2B6	sensors	FORK FREE HEIGHT
2B7	sensors	Zero forkoff switch
2B9	sensors	LIFTING cutback proximity switch
2B10	sensors	LOWERING cutback proximity switch
2Y1	Y/Coil	Prop. lifting valve
2Y2	Y/coil	Prop. lowering valve
2Y3	Y/Coil	ON/OFF Reach in/out valve
2Y4	Coil	Prop. Tilt forward valve
2Y5	Y/coil	Prop. Tilt backward valve
2Y7	Y/Coil	ON/OFF sideshift left/right valve
2A1	control	Controller 1a1
2A14	control	Controller 1a2
Y1	coil	Electric magnetic brake
1M	mo	Accelerator(MP X-axis)

代号	名称	英文名称
P1	encoder	Proximity switch zero position
3A	sensor	Height encoder
H1	HL	Horn
H2	ALM	Caution light
H3	HL	Head light
H4	sensor	Backward buzzer

V. Troubleshooting

5.1 Transmission system

problem	Possible cause	Remedies
Loud noise of gears when driving	too much clearance between the gears	Adjust
	much wear of the gears	Replace
	lower oil level in oil tank	Add oil
Loud striking noise when steering	too much clearance between the gears	Adjust
	much wear of the gears	Replace
Leakage of the gear box	leakage in the plug	Adjust or replace the gasket
	seeping next to the monitor's axis	Replace o-ring
	Seeping in the connecting face of the connecting plate and transmission box housing	Check the connecting surface clearance and apply sealant

5.2 Steering system

problem	Possible cause	Remedies
No steering	no working of the steering motor	Check and replace the power supply line
	no working of the turn angle sensor	Check and replace the power supply line
	damage of the proximity switch	Check if the clearance between proximity switch and sensing plate is smaller than 5mm or change the proximity switch.
	no working of the steering controller	Check the harness and replace
Loud noise of gears when steering	too much clearance between the gears	Adjust
	much wear of the gears	Replace
Inflexible operation of steering system	Inequality of steering wheel rotating	Adjust the hand wheel to make it homocentric-ally with the steering axis

5.3 Parking brake system

problem	Possible cause	Remedies
The parking brake can	Low electricity supply	Adjust the electricity supply

not be released.	Break off of electricity supply	Reconnect power supply
	over large of brake gas gap	Readjust brake gas gap
	Damage of friction disc	replace the brake and readjust brake gas gap
	Damage of brake coil	replace the brake
	Over small of brake gas gap	readjust brake gas gap
Parking brake can not work.	Voltage switch is on power off position	Check the electricity supply
	Greasy dirt on friction surface of friction disc	Clean the dirt and readjust the gas gap
Interrupted brake	Over low of electricity supply	Adjust electricity supply

5.4 Hydraulic system

Problem	Possible cause	Remedies
It can not lift or the lift is poor.	oil leakage in the pipeline or the connector	Check and repair
	low oil level in the oil tank	Add oil
	too much impurity in the oil and the filter being blocked	Chang oil or oil filter
	much wear of the gears	Change
	oil leakage of the gears	Check the o-ring or replace
	Low pressure of system safety valve	Adjust safety valve pressure
	Inner leakage of control valve’s lifting piece	Change the control valve
	Inner leakage of lifting cylinder	Change the seal ring
Fork can not reach forward or backward.	The two-position six-way valve is damaged.	Change
	Inner leakage of piece for control valve auxiliary function	Change
	Inner leakage of tilting cylinder	Change the seal ring
Fork can not tilt forward and backward.	Damage of tilting balance valve	Change
	Damage of two-position six-way valve	Change
	Inner leakage of piece for control valve auxiliary function	Change
	Inner leakage of tilting	Change the seal ring

	cylinder	
side shifting can not be realized.	Damage of two-position six-way valve	Change
	Inner leakage of piece for control valve auxiliary function	Change
	Inner leakage of tilting cylinder	Change

5.5 Electric system

Problem	Possible cause	Remedies
No signal after the turning on of the key switch	poor contact of the key switch	Check and repair
	broken wire	Connect again
	poor contact of the connector	Check and repair
	poor connection of the battery connector	Tighten the bolt
The truck does not work when pushing travelling knob	broken wire	Connect again
	poor contact of the connector	Check and repair
	poor contact of the direction switch	Check and change
	a fault of the driving controller	Check and change
	a fault of the steering controller	Check and change
No working of the lifting motor	a short circuit in the contactor coil	Change the connector
	abnormal working of the lifting switch	Check and change
	broken wire	Connect again
	poor contact of the connector	Check and repair
	a fault of the lifting controller	Check and repair
Long-working of the lifting motor	abnormal working of the lifting switch	Check and repair
No working of the horn	poor contact of the connector	Check and change
	poor contact with the horn switch	Check and repair
	broken horn	Change
Long-working of the horn	long-contact of the horn switch	Check and repair
Abnormal working of the illuminative lights	broken fuse	Change
	poor contact of the connector	Cheek and repair
	broken bulb	Change

VI. Maintenance

6.1 Routine maintenance

In the use of the work, especially during the first operation period of the new truck, carefully operation and timely adjustment, maintenance and service are all necessary for keeping the truck in good condition. Do as the following.

(1) When a new truck has been used for 100 hours, replace the gear oil in transmission box, and tighten all fixing parts.

(2) When a new truck has been used for 200 hours, readjust the clearance between the gears.

(3) All motors, controllers and battery set should be maintained and serviced according to the manual.

(4) All electric connectors should be check once a month.

(5) Prevent water from entering the truck; prohibit cleaning the truck with water gun and working outside on rainy day.

(6) Keep the surface of the battery set clean and dry.

(7) Periodically maintain the truck from the following list:

Number	Item	Mode	Cycle	Remarks
1	Drive gear box	Change gear oil	1200h	
2	Steering gear box	Change lubrication grease	1200h	
3	Pin, reach cylinder	Add lubricating grease	100h	
4	Pin, tilt cylinder	Add lubricating grease	100h	
5	Hydraulic oil tank and filter	Clean	100h	
6	Hydraulic oil	Replace	1000h	
7	Lift chain	Replace	3000h	Replace it at once when damaged

8	High pressure pipe	Replace	3000h	Replace it at once when damaged

6.2 Oil for forklift truck

Name	Trademark/code name(home)	Trademark/code name(abroad)
Hydraulic oil	N40#	ISOVG30
Gear oil	85W/90	SAE90/SAE80W
Lubricating grease	3# lithium base grease dropping point 170	JISK-2220, 1#，2#

6.3 Lubricating chart

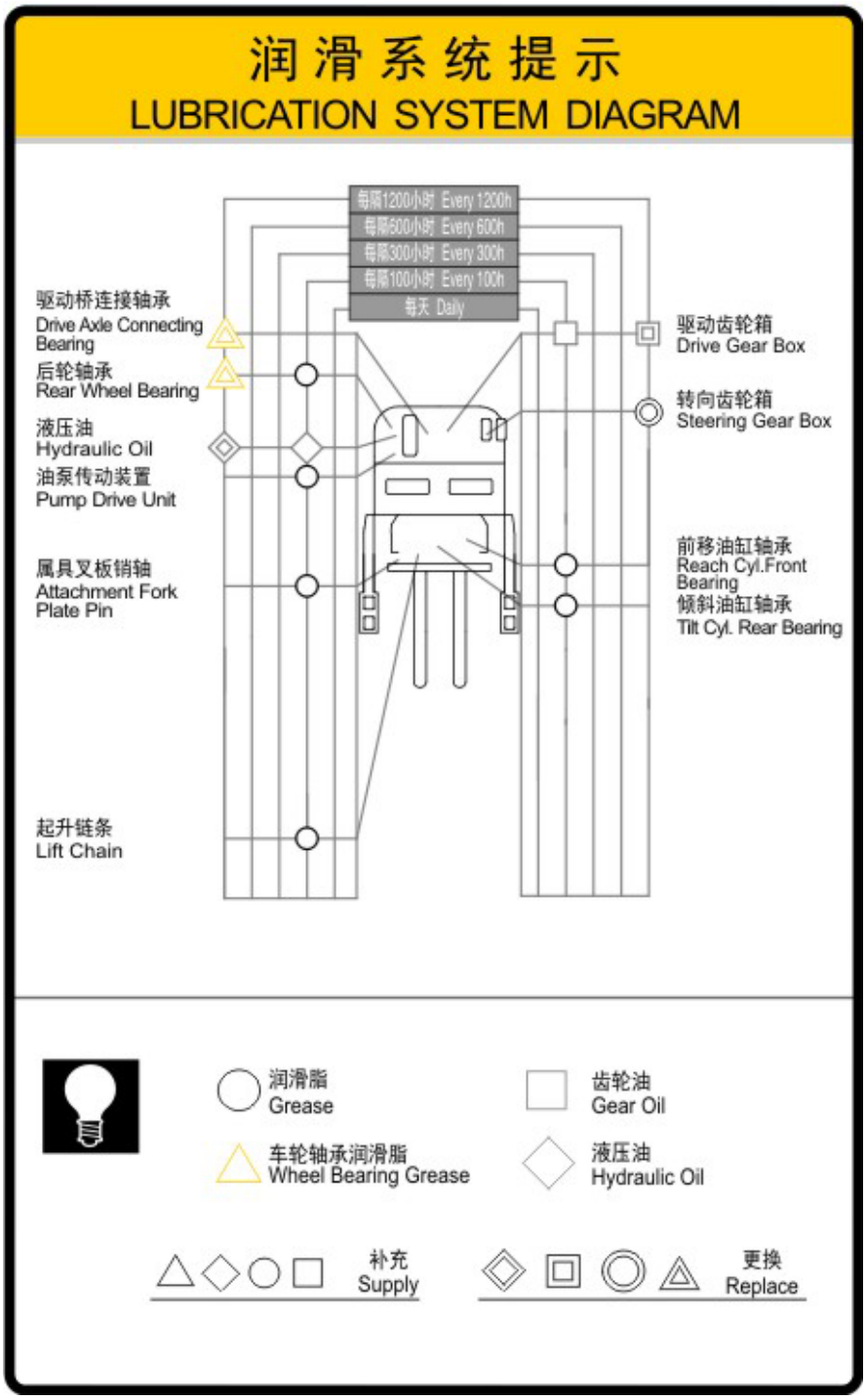

VII. Others

7.1 The size and weight of the main takedown parts of the truck

Parts name	Parameters	Unit	Value
Overhead guard	Max. dimensions	mm	1026*1303*893
	Weight	kg	56
Fork	Max. dimensions	mm	982*122*538
	Weight	kg	45
Three-stage full free mast (lifting height 5025mm)	Max. dimensions	mm	2426*645*926
	Weight	kg	1120
Three-stage full free mast (lifting height 5330mm)	Max. dimensions	mm	2526*645*926
	Weight	kg	1140
Three-stage full free mast (lifting height 6095mm)	Max. dimensions	mm	2781*645*926
	Weight	kg	1205
Three-stage full free mast (lifting height 6855mm)	Max. dimensions	mm	3036*645*926
	Weight	kg	1260
Three-stage full free mast (lifting height 7620mm)	Max. dimensions	mm	3321*645*926
	Weight	kg	1325
Battery 775Ah (for CQD16X1)	Max. dimensions	mm	985*788*365
	Weight	kg	800
Battery 930Ah (for CQD18X1)	Max. dimensions	mm	1985*788*415
	Weight	kg	935

7.2 Mast disassembly

Draw the telescopic bracket back completely and tilt backward. Hook the hole for hoist on the top beam of mast with rope. Disassemble the high pressure pipeline at the lower end of mast. Disconnect the harness of upper and lower speed limit proximity switch. Loose the 4 M20 bolts connecting mast lower end and frame. Then loose the bolts (M12×80) connecting the two sides of outer mast and support seat and remove the seat cover. Then the mast can be disassembled from the truck.

7.3 Overhead guard disassembly

Remove the screws（M20×70）connecting the overhead guard and outer mast. Hook the head frame of overhead guard with rope and remove the overhead guard.

7.4 Vibration specification

Item	Type	Value
Vibration acceleration	Travelling work	900m/s ²
	Lifting work	300m/s ²

https://truckmanualshub.com/

HELI
LIFTING THE FUTURE

S276-1:2018

ADD:NO.668 Fangxing Street,Economical Development Zone,Hefei ,P.R.China
TEL:(86 551)63689000 FAX:(86 551)63689666
400 SERVICE: 4001-600761 WEBSITE:http://www.helichina.com

S276-1:2018

FREE SERVICE HOTLINE
4001 600 761

heli copyright