https://truckmanualshub.com/

VEAM290100

Operation & Maintenance Manual

WA250PT-5H

WHEEL LOADER

SERIAL NUMBERS WA250H60051 AND UP

DANGER

Incorrect operation and maintenance of this machine may be hazardous and cause injuries. The operator and maintenance personnel must read this manual before commencing operation or maintenance. Keep this manual within reach at all times and ensure that operating personnel read it at regular intervals.

NOTE

Komatsu has had the operating and maintenance instructions translated into all the languages of the European Union. Should you require a copy in another language please inquire at your local dealer's.

KOMATSU

https://truckmanualshub.com/

https://truckmanualshub.com/

FOREWORD

https://truckmanualshub.com/

Foreword

This manual provides rules and guidelines which will help you use this machine safely and effectively. The precautions in this manual must be followed at all times when performing operation and maintenance. Most accidents are caused by the failure to follow fundamental safety rules for the operation and maintenance of machines. Accidents can be prevented by knowing beforehand conditions that may cause a hazard when performing operation and maintenance.

⚠ WARNING

Operators and maintenance personnel must always do as follows before beginning operation or maintenance.

- **Always be sure to read and understand this manual thoroughly before performing operation and maintenance.**
- **Read the safety messages given in this manual and the safety labels affixed to the machine thoroughly and be sure that you understand them fully.**

Keep this manual at the storage location for the Operation and Maintenance Manual given below, and have all personnel read it periodically.

If this manual has been lost or has become dirty and cannot be read, request a replacement manual immediately from Komatsu or your Komatsu distributor.

If you sell the machine, be sure to give this manual to the new owners together with the machine.

Komatsu delivers machines that comply with all applicable regulations and standards of the country to which it has been shipped. If this machine has been purchased in another country or purchased from someone in another country, it may lack certain safety devices and specifications that are necessary for use in your country. If there is any question about whether your product complies with the applicable standards and regulations of your country, consult Komatsu or your Komatsu distributor before operating the machine.

Storage location for the Operation and Maintenance Manual:

Pocket (1) at rear of operator's seat

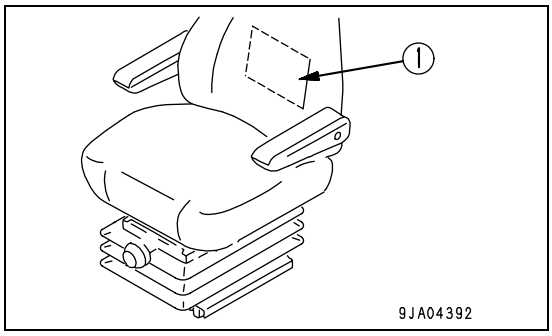

https://truckmanualshub.com/

EU Directives

Machines supplied by us fulfil the Directive for Machinery 89/392/EEC and its supplements. If the machine is being used in another country, it is possible that certain safety regulations and specifications may not be fulfilled for use in that country. For example, priority vehicle warning lamps may be used in some countries, but are forbidden in others.
Please contact our dealer before using the machine if you have any questions regarding the fulfilment of standards and regulations in a specific country.

Notes on subsequent installation of electrical and electronic equipment and components
Electrical and electronic equipment and/or components which have been installed subsequently, emit electromagnetic radiation which can influence the function of the electronic components and sections of the machine. This can have an influence on the safety of the machine and endanger persons. For this reason, please ensure that the following safety instructions are observed.
If you are installing electrical or electronic equipment and/or components in the machine and connect them to the vehicle electrical system, you must check at own responsibility that the installations do not cause any disturbance to the vehicle's electronic system or other components. Above all, you must ensure that any subsequently installed electrical and electronic components comply with the EMV Directive 89/336/EEC in its current edition and bear the CE mark.
The following requirements also have to be met for subsequent installation of mobile communication systems (e.g. radio, telephone):

- Only equipment approved by national legislation (e.g. BZT approval for Germany) may be used
- The unit must be fixed in position
- Portable or mobile units may only be used inside the vehicles if they are connected to a fixed outside antenna
- The transmitter unit must be spatially separated from the vehicle's electronic system
- Make sure when installing the antenna that this is installed correctly with good earth connection between antenna and vehicle mass

Also observe machine manufacturer's installation instructions for wiring, installation and maximum permitted power consumption.

https://truckmanualshub.com/

Safety information

To enable you to use this machine safely, safety precautions and labels are given in this manual and affixed to the machine to give explanations of situations involving potential hazards and of the methods of avoiding such situations.

Signal words

The following signal words are used to inform you that there is a potential hazardous situation that may lead to personal injury or damage.
In this manual and on machine labels, the following signal words are used to express the potential level of hazard.

DANGER	Indicates an imminently hazardous situation which, if not avoided, will result in death or serious injury.
WARNING	Indicates a potentially hazardous situation which, if not avoided, could result in death or serious injury.
CAUTION	Indicates a potentially hazardous situation which, if not avoided, may result in minor or moderate injury. This word is used also to alert against unsafe practices that may cause property damage.

Example of safety message using signal word

WARNING

When standing up from the operator's seat, always place the safety lock lever in the LOCK position.
If you accidentally touch the control levers when they are not locked, this may cause a serious injury or death.

Other signal words

In addition to the above, the following signal words are used to indicate precautions that should be followed to protect the machine or to give information that is useful to know.

NOTICE	This word is used for precautions that must be taken to avoid actions which could shorten the life of the machine.
REMARKS	This word is used for information that is useful to know.

https://truckmanualshub.com/

Safety labels

Safety labels are affixed to the machine to inform the operator or maintenance worker on the spot when carrying out operation or maintenance of the machine that may involve hazard.
This machine uses “Safety labels using pictograms“ to indicate safety procedures.

Safety labels using pictogram

Safety pictograms use a picture to express a level of hazardous condition equivalent to the signal word. These safety pictograms use pictures in order to let the operator or maintenance worker understand the level and type of hazardous condition at all times. Safety pictograms show the type of hazardous condition at the top or left side, and the method of avoiding the hazardous condition at the bottom or right side. In addition, the type of hazardous condition is displayed inside a triangle and the method of avoiding the hazardous condition is shown inside a circle.
Komatsu cannot predict every circumstance that might involve a potential hazard in operation and maintenance. Therefore, the safety messages in this manual and on the machine may not include all possible safety precautions.
If any procedures or actions not specifically recommended or allowed in this manual are used, it is your responsibility to take the necessary steps to ensure safety.
In no event should you engage in prohibited uses or actions described in this manual.

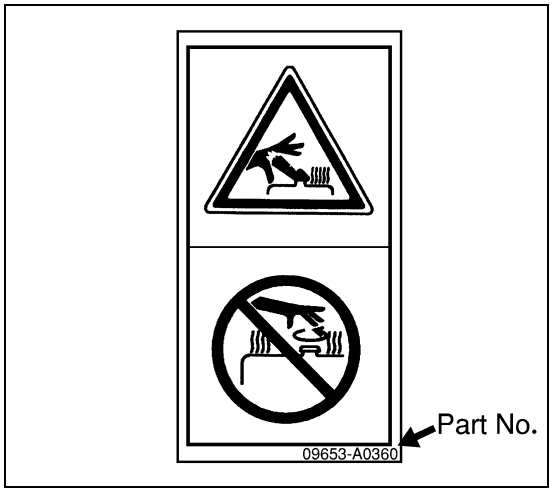

The explanations, values, and illustrations in this manual were prepared based on the latest information available at that time. Continuing improvements in the design of this machine can lead to changes in detail which may not be reflected in this manual. Consult Komatsu or your Komatsu distributor for the latest available information of your machine or for questions regarding information in this manual.

The numbers in circles in the illustrations correspond to the numbers in ( ) in the text. (For example: ① -> (1))

https://truckmanualshub.com/

Introduction

This Komatsu machine is designed to be used mainly for the following work:

- Digging work
- Smoothing
- Pushing work
- Loading work

For details of the operating procedure, see “Work possible using wheel loader on page 3-84“.

Directions of machine

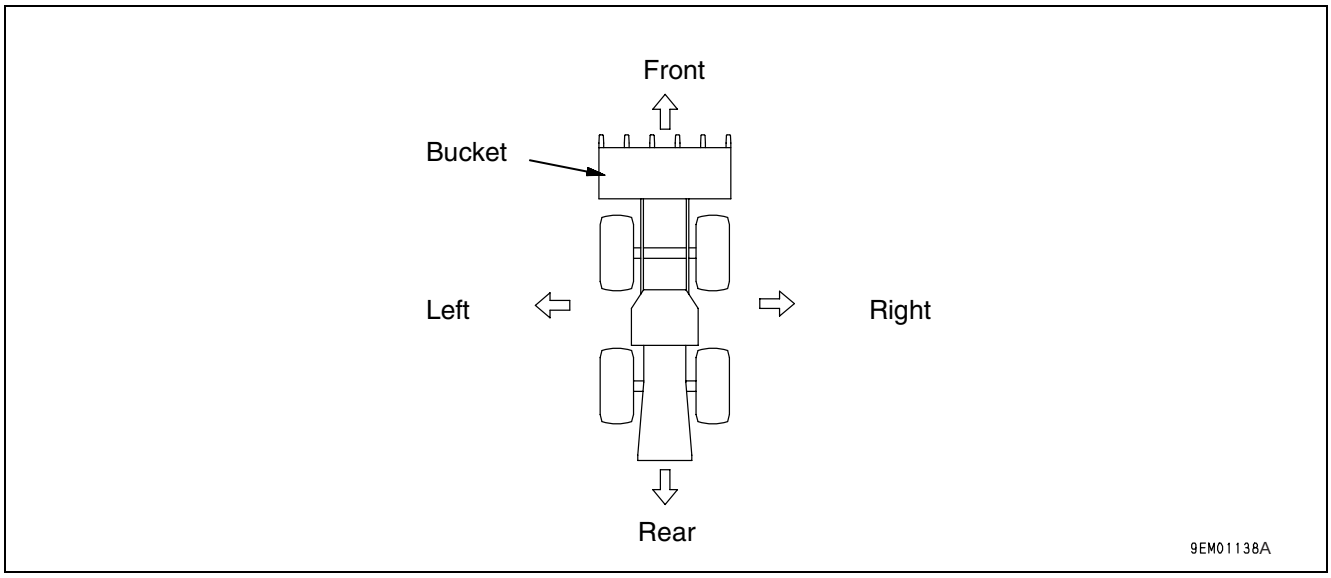

In this manual, the directions of the machine (front, rear, left, right) are determined according to the view from the operator's seat in the direction of travel (front) of the machine.

https://truckmanualshub.com/

Necessary information

When requesting service or ordering replacement parts, please inform your Komatsu distributor of the following items.

Machine serial No. plate and position

On the center right of the front frame.

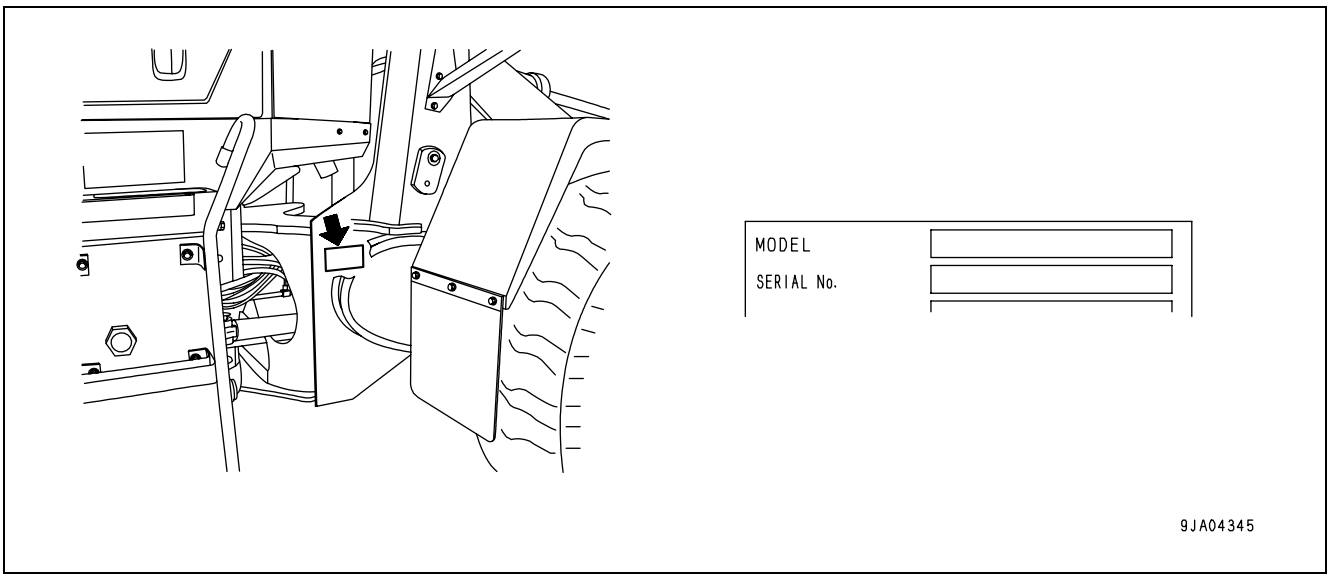

Engine serial No. plate and position

This is on the side face of the engine cover on the right side of the machine.

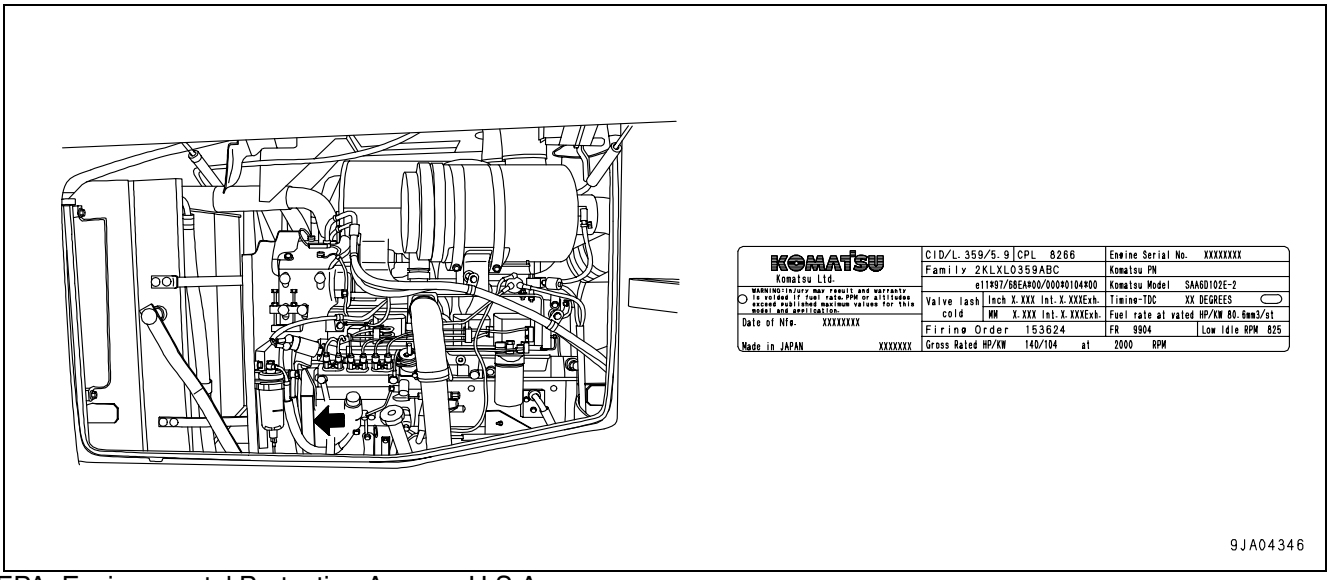

EPA: Environmental Protection Agency, U.S.A.

https://truckmanualshub.com/

Position of service meter

It is at the center bottom of the machine monitor.

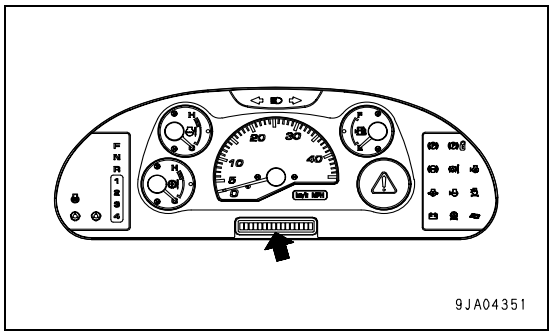

Table to enter serial No. and distributor

Machine serial No.	
Engine serial No.	
Distributor name	
Address	
Service Personnel	
Phone/Fax	

https://truckmanualshub.com/

Contents

FOREWORD

Foreword ... 1-2
Safety information ... 1-4
Introduction ... 1-6
Directions of machine ... 1-6
Necessary information ... 1-7
Machine serial No. plate and position ... 1-7
Engine serial No. plate and position ... 1-7
Position of service meter ... 1-8
Table to enter serial No. and distributor ... 1-8
Contents ... 1-9
... 1-9
Dimensions, weights and operating data ... 1-15
WA250PT-5H: Dimensions, weights and operating data ... 1-15
CE-conforming equipment ... 1-16
CE-conforming equipment ... 1-16
Manufacturer-supplied CE-conforming equipment, according to document 421-93-H1900 ... 1-17

SAFETY

Safety labels ... 2-3
Location of safety labels ... 2-3
Presentation of safety labels ... 2-4
General precautions ... 2-7
Safety rules ... 2-7
Precautions for operation ... 2-16
Starting engine ... 2-16
Operation ... 2-17
Transportation ... 2-24
Battery ... 2-25
Towing ... 2-27
Precautions for maintenance ... 2-28
Safety instructions ... 2-28
Precautions with tires ... 2-35
Handling tires ... 2-35
Precautions when storing tires ... 2-35

OPERATION

General view ... 3-3
General view of machine ... 3-3
General view of controls and gauges ... 3-4
Explanation of components ... 3-6
Machine monitor ... 3-6
Monitor system ... 3-7
Types of warning ... 3-8
Central warning lamp ... 3-9

https://truckmanualshub.com/

Character display portion 3-10
Emergency stop item 3-14
Caution items 3-16
Warning/limit functions for travel speed 3-18
Inspection and maintenance item 3-19
Pilot display portion 3-21
Meter display portion 3-24
Other functions of machine monitor 3-26
Switches 3-30
Control levers, pedals 3-38
Steering tilt lock lever 3-41
Cap and cover with lock 3-42
Safety bar 3-43
Towing pin 3-43
Grease pump 3-43
Cab door inner lock 3-44
Cab door open lock 3-44
Cab window open lock cancel knob 3-44
Fuse 3-45
Fuse capacity and name of circuit 3-45
Slow blow fuse 3-46
Power outlet 3-47
Air conditioner 3-48
General locations and function of control panel 3-48
Method of operation 3-51
Precautions when using 3-52
Handling cab wiper 3-53
Preventing damage to wiper arm bracket 3-53
Operation 3-54
Check before starting engine, adjust 3-54
Walk-around check 3-54
Check before starting 3-57
Adjustment 3-62
Operations and checks before starting engine 3-66
Starting engine 3-68
Operations and checks after starting engine 3-70
Breaking-in the machine 3-70
Normal operation 3-70
Stopping engine 3-72
Moving the machine (Directional, speed), stopping the machine 3-73
Moving the machine 3-73
Changing direction 3-75
Stopping the machine 3-78
Turning 3-79
Emergency steering 3-79
Operation of work equipment 3-80
Handling hydraulic quick coupler 3-81
Installing the attachment 3-81
Removal and installation of the attachment 3-83
Precautions for use 3-83
Precautions when removing the attachment 3-83
Work possible using wheel loader 3-84
Digging operations 3-84
Leveling operations 3-86
Pushing operation 3-86
Load and carry operations 3-86
Loading operations 3-87
Precautions for operation 3-89
Permissible water depth 3-89

https://truckmanualshub.com/

If wheel brake does not work ... 3-89
Precautions when driving up or down slopes ... 3-89
Adjusting work equipment posture ... 3-90
Adjusting boom kickout ... 3-90
Adjusting bucket positioner ... 3-91
Adjusting fork positioner ... 3-92
Bucket level indicator ... 3-92
Parking machine ... 3-93
Check after stopping engine ... 3-95
Checks after completion of operation ... 3-95
Locking ... 3-95
Handling the tires ... 3-96
Precautions when handling tires ... 3-96
Tire pressure ... 3-96
Precautions for using load and car method ... 3-97
Transportation ... 3-98
Transportation procedure ... 3-98
Loading, unloading work with trailers ... 3-98
Loading ... 3-98
Securing machine ... 3-99
Unloading ... 3-99
Lifting machine ... 3-100
Location of lifting position mark ... 3-101
Weight table ... 3-101
Lifting procedure ... 3-102
Cold weather operation ... 3-103
Precautions for low temperature ... 3-103
Fuel and lubricants ... 3-103
Coolant ... 3-103
Battery ... 3-104
Precautions after completion of work ... 3-105
After cold weather ... 3-105
Warming-up operation for steering hydraulic circuit in cold weather ... 3-105
Long-term storage ... 3-106
Before storage ... 3-106
During storage ... 3-106
After storage ... 3-106
Troubleshooting ... 3-107
When machine runs out of fuel ... 3-107
Towing the machine ... 3-107
When engine can be used ... 3-108
When engine cannot be used ... 3-108
If battery is discharged ... 3-109
Removal and installation of battery ... 3-109
Precautions for charging battery ... 3-110
Starting engine with booster cable ... 3-110
Other trouble ... 3-112
Electrical system ... 3-112
Chassis ... 3-113
Engine ... 3-115

MAINTENANCE

Guides to maintenance ... 4-2
Outlines of service ... 4-4
Handling oil, fuel, coolant and performing oil clinic ... 4-4
Oil ... 4-4

https://truckmanualshub.com/

Fuel ... 4-4
Coolant ... 4-4
Grease ... 4-4
Carrying out KOWA (Komatsu Oil Wear Analysis) ... 4-5
Storing oil and fuel ... 4-5
Filters ... 4-6
Biodegradable hydraulic oil and lubricants ... 4-6
Outline of electric system ... 4-6
Wear parts ... 4-7
Wear parts list ... 4-7
Fuel, coolant and lubricants ... 4-8
Lubrication chart ... 4-8
Proper selection of fuel, coolant and lubricants ... 4-9
Standard tightening torques for bolts and nuts ... 4-13
Torque list ... 4-13
Periodic replacement of safety critical parts ... 4-15
Safety critical parts ... 4-15
Maintenance schedule chart ... 4-17
Service schedule ... 4-17
Service procedure ... 4-19
Initial 250 hours service (only after the first 250 hours) ... 4-19
When required ... 4-20
Check, clean, or replace air cleaner element ... 4-20
Dust pre-extractor "Turbo II": check, clean ... 4-23
Clean inside of cooling system ... 4-24
Check oil level in transfer case, add oil ... 4-27
Check axle oil level, add oil ... 4-28
Clean axle case breather ... 4-29
Clean air conditioner condenser ... 4-29
Check window washing fluid level, add fluid ... 4-30
Clean radiator fins and cooler fins ... 4-30
Clean transfer oil cooler fins ... 4-31
Check electrical intake air heater ... 4-31
Replace bolt on cutting edge ... 4-31
Replace bucket teeth ... 4-32
Check air conditioner ... 4-33
Replace slow blow fuse ... 4-34
Selection and inspection of tires ... 4-35
Check before starting ... 4-37
Every 50 hours service ... 4-38
Drain water, sediment from fuel tank ... 4-38
Every 100 hours service ... 4-39
Lubricate rear axle pivot pin ... 4-39
Clean element in air conditioner fresh air filter ... 4-39
Check oil level in hydraulic tank, add oil ... 4-40
Every 250 hours service ... 4-41
Check battery electrolyte level ... 4-41
Check parking brake ... 4-43
Check air conditioner compressor belt tension, adjust ... 4-43
Check for loose wheel hub bolts, tighten ... 4-44
Clean element in air conditioner recirculation filter ... 4-45
Lubricating ... 4-46
Every 500 hours service ... 4-47
Change oil in engine oil pan, replace engine oil filter cartridge ... 4-47
Replace fuel filter cartridge ... 4-48
Clean water separator strainer ... 4-49
Every 1000 hours service ... 4-50
Change oil in transfer case ... 4-50
Clean transfer case breather ... 4-51

https://truckmanualshub.com/

Replace HST oil filter element 4-52
Lubricating 4-53
Check tightening parts of turbocharger 4-53
Check play of turbocharger rotor 4-53
Check alternator driving belt tension and replacement 4-53
Every 2000 hours service 4-54
Change oil in hydraulic tank, replace hydraulic filter element 4-54
Replace hydraulic tank breather element 4-55
Change axle oil 4-56
Replace element in air conditioner recirculation air filter, fresh air filter 4-56
Check alternator, starting motor 4-56
Check engine valve clearance, adjust 4-56
Check brake disc wear 4-57
Clean and check turbocharger 4-57
Check accumulator gas pressure 4-57
Check vibration damper 4-57
Every 4000 hours service 4-58
Lubricating 4-58
Check water pump 4-58

TECHNICAL DATA

Technical data 5-2
Noise emission levels 5-4
Vibration level 5-4

ATTACHMENTS, OPTIONS

Selecting bucket and tires 6-2
Handling fork tool 6-3
Explanation of components 6-3
Work equipment lever 6-3
Operation 6-4
Loading operation 6-4
Method of using 3 levers 6-7
Explanation of components 6-7
Lift arm control lever 6-7
Bucket control lever 6-8
Auxiliary control lever 6-8
Directional selector switch 6-8
Directional selector actuation switch 6-9
Operation 6-10
Using switch to change between forward and reverse 6-10
Central lubrication system 6-12
Operating the central lubrication system 6-12
Display and control unit 6-12
Led-display 6-12
Pushbuttons 6-13
Changing the lubrication interval times 6-13

INDEX

Index 7-3

https://truckmanualshub.com/

https://truckmanualshub.com/

Dimensions, weights and operating data

WA250PT-5H: Dimensions, weights and operating data

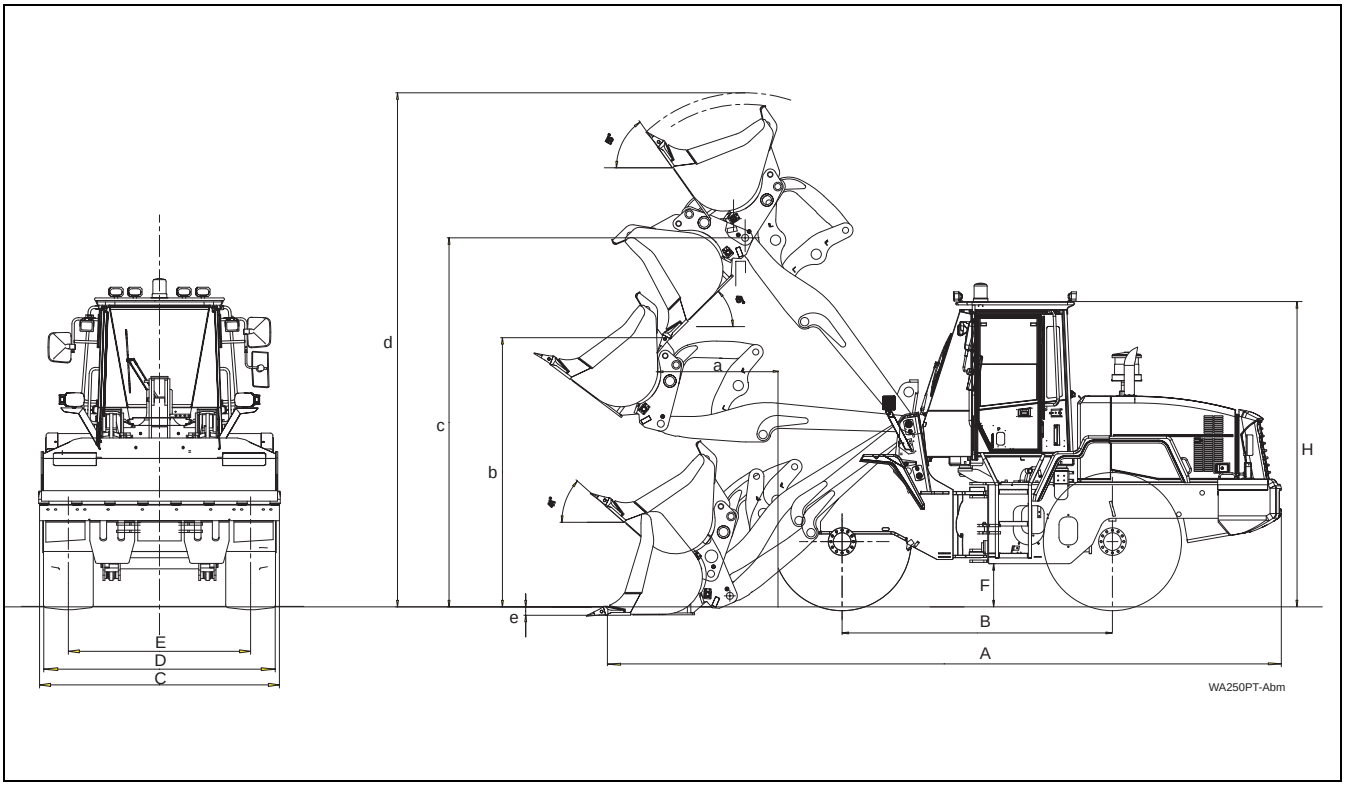

Measurements, operating data				
	Bucket capacity to ISO 7546	**m³**	**2,0**	
	Material density	t/m³	1,8	
	Bucket weight without teeth	kg	883	
	Static tipping load, straight	kg	8.672	
	Static tipping load, 40° angle	kg	7.548	
	Breakout force, hydraulic	kN	109	
	Lifting capacity, hydraulic, on ground	kN	61	
	Operating weight *)	kg	12.880	
a	Reach at 45° discharge	mm	1.023	
b	Dumping height at 45° discharge	mm	2.887	
c	Lift height, hinge pin	mm	3.959	
d	Height to upper edge of bucket	mm	5.514	
e	Digging depth	mm	90	
A	Overall length, bucket on ground	mm	7.424	
B	Wheel base	mm	2.900	
C	Bucket width	mm	2.540	These values refer to machines with 20,5 R25 XHA
D	Width over tyres	mm	2.460	
E	Gauge	mm	1.930	
F	Ground clearance	mm	450	*) Machine without additional counterweight
H	Overall height	mm	3.188	

https://truckmanualshub.com/

CE-conforming equipment

CE-conforming equipment

CE-conforming equipment

	1	2	3	4	5	–
	Type	Part No.	Volume m^3	Load Capacity kg	Hydraulic pressure bar	Weight kg
Bucket	WA250PT-5H	418-70-H2710	2,0	-	-	884
		418-70-H2700	2,0	-	-	981
		418-70-H2720	2,1	-	-	1004
		418-70-H2850		-	-	625

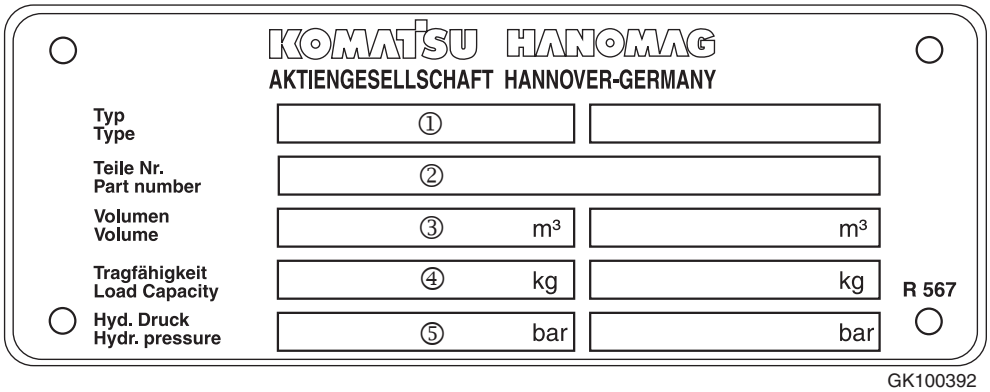

GK100392

https://truckmanualshub.com/

Manufacturer-supplied CE-conforming equipment, according to document 421-93-H1900

The responsibility for observing valid regulations in the case of wheel loaders with "interchangeable equipment" (e.g. bucket or fork-lift) which was not supplied from works lies with the customer which was subsequently fitted to the machine.
The directives for CE conformity and road-traffic registration are deemed to have been fulfilled when the manufacturer of the equipment confirms fulfilment of the form 421-93-H1900 alongside.
The certification must be sent to the customer and the wheel loader manufacturer. The CE conformity declaration for a specific wheel loader is only legally valid once this has taken place.
The dimensions X1, X2, Y1 and Y2 must be provided by the customer for approval for use on public roads. (valid in Germany)
The dimension Sh (smallest tyre radius) must be added to the dimension D2.
The figure G (in kg) represents the maximum load (equipment and operating load) which may act upon this point.

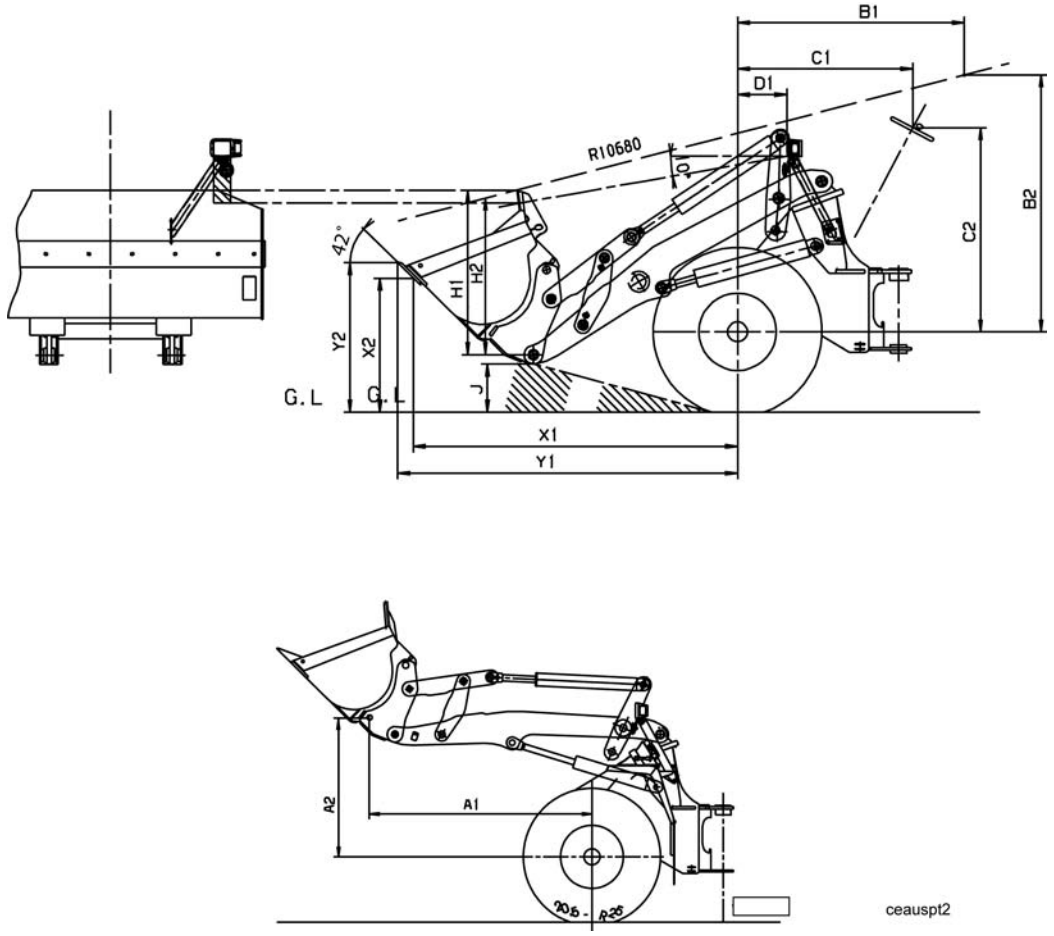

https://truckmanualshub.com/

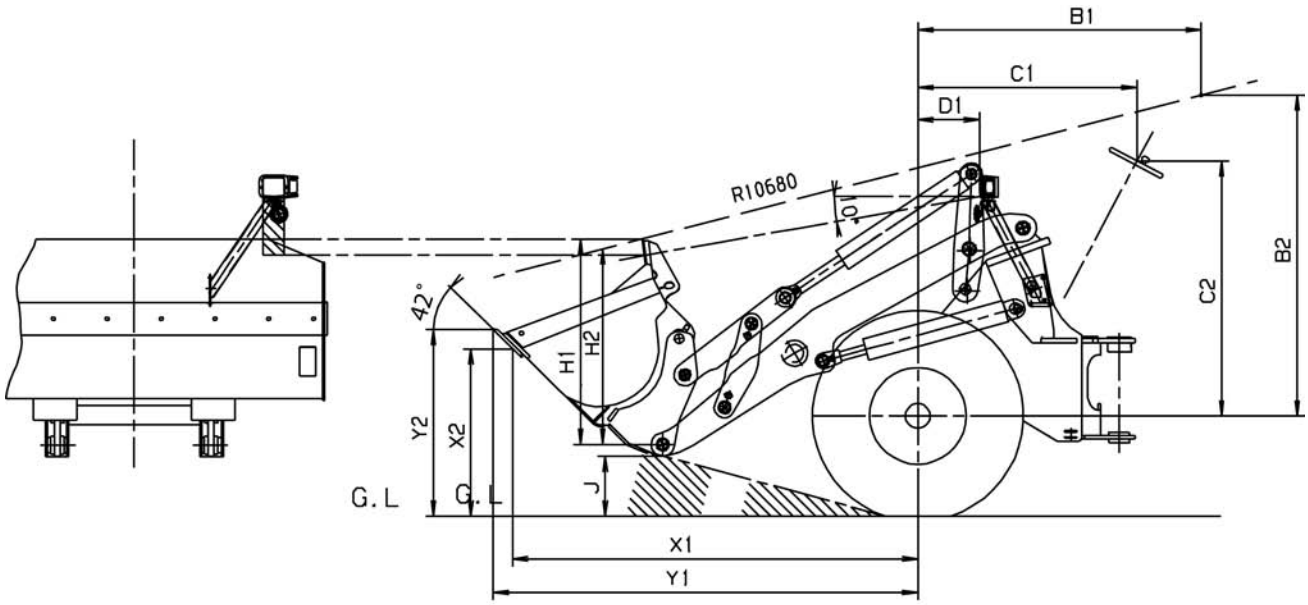

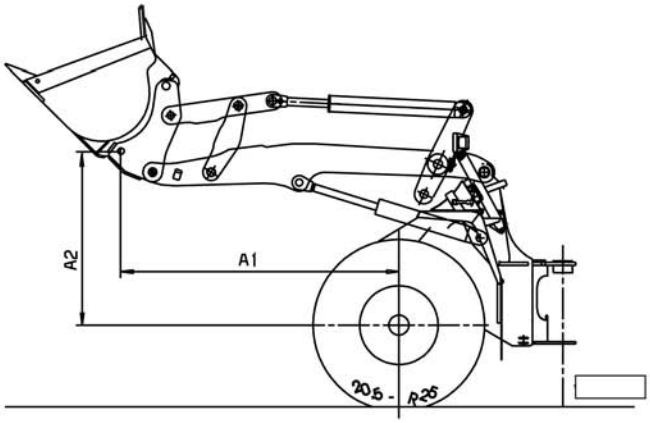

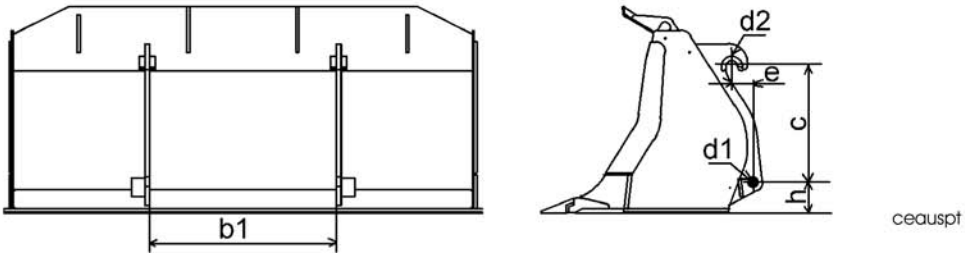

https://truckmanualshub.com/

Manufacturer-supplied CE-conforming equipment, according to document 421-93-H1900

A1 Distance: bucket pivoting point - front axle, horizontal
A2 Distance: bucket pivoting point - front axle, vertical
Sh Distance: road level - front axle
B1 Distance: driver's eye (1) - front axle, horizontal
B2 Distance: driver's eye (1) - front axle, vertical
C1 Distance: centre steering wheel - centre front axle, horizontal
C2 Distance: center steering wheel - centre front axle, horizontal
D1 Distance: headlight - centre front axle, horizontal
D2 Distance: headlight - centre front axle, vertical
G Weight of equipment and working load
H1 Distance: bucket pivoting point - bucket upper edge, vertical (carrying position)
H2 Distance: bucket pivoting point - vision line, vertical (carrying position)
J Distance: road level - bucket bottom edge (carrying position)
X1 Distance: cutter protection - front axle, horizontal
X2 Distance: cutter protection - road level, vertical
Y1 Distance: teeth protection - front axle, horizontal
Y2 Distance: teeth protection - road level, vertical
b1 Bucket connection dimension, boom width inside
b2 Bucket connection dimension, boom arm
b3 Bucket connection dimension, tilt rod
b4 Bucket connection dimension, temporary size
c Bucket connection dimension between d1 and d2, vertical
d1 Bucket connection dimension, bolt (3) for boom
d2 Bucket connection dimension, bolt (3) for tilt rod
e Bucket connection dimension d1 - d2, horizontally displaced
h Distance: bucket bottom edge - boom bolt hole
l Distance: centre of bolt -- centre of fastening screw

WA250PT-5H	421-93-H1900
A1	2.184
A2	1.960
Sh	-
B1	1.910
B2	2.190
C1	1.415
C2	1.720
D1	435
D2	1.450
G	4.400
H1	1.257
H2	1.498
J	270
X1	2.530
X2	1.080
Y1	2.710
Y2	1.220
b1	955 ± 4
b2	-
b3	-
b4	-
c	595
d1	$50{,}5^{+0{,}5}$
d2	$61{,}5^{+1}$
e	159,5
h	220
l	-
1	Driver’s eye
2	Vision line
3	Bolts
Tyres	MICHELIN 20.5R25 XHA
Bucket	2,0 m³ 418-70-H2700

https://truckmanualshub.com/

https://truckmanualshub.com/

SAFETY

⚠ WARNING

Please be sure that you fully understand this manual and the precautions related to safety for the machine. When operating or servicing the machine, always follow these precautions strictly.

https://truckmanualshub.com/

https://truckmanualshub.com/

Safety labels

The following safety labels are used on this machine. Be sure that you fully understand the correct position and content of these safety labels.

To ensure that the content of these safety labels can be read properly, be sure that they are in the correct place and always keep them clean. When cleaning them, use soap and water. Do not use organic solvents or gasoline. These may cause the safety labels to peel off.

If the safety labels are damaged or lost, or cannot be read, replace them with new parts. For details of the part numbers, see this manual or check on the actual part, and order the new part from your Komatsu distributor.

There are also other labels in addition to the safety labels. Handle these labels in the same way.

Location of safety labels

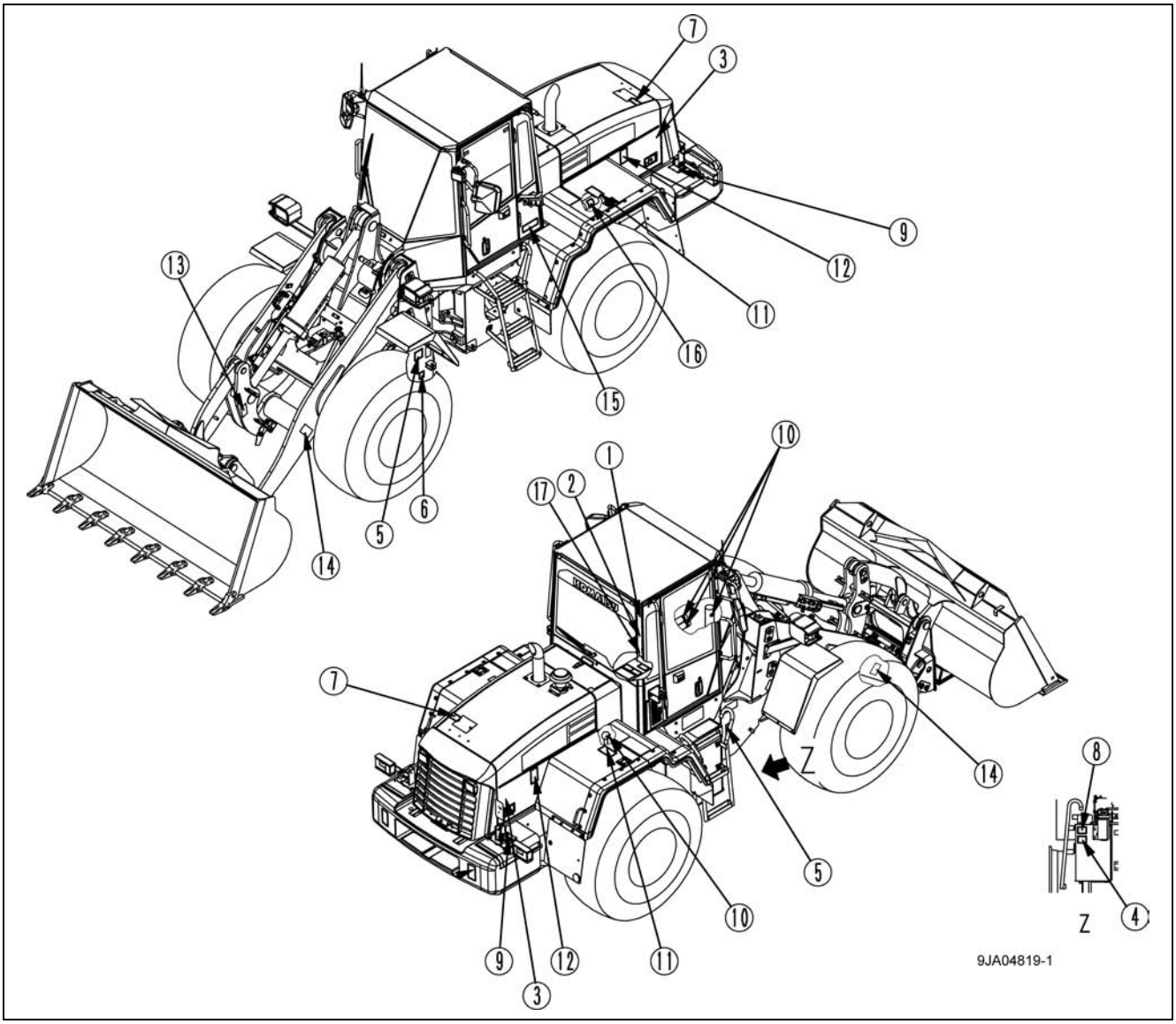

https://truckmanualshub.com/

Presentation of safety labels

1 Precautions before starting operation, inspection and maintenance (421-93-H1250)

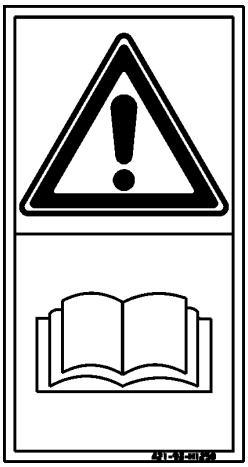

WARNING!

Read the Operator's Manual before startung operation, inspection, maintenance or transportation.

2 Precautions before leaving the machine (421-93-H1290)

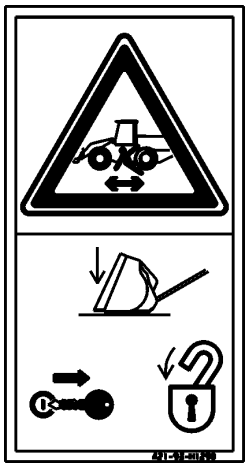

Sign indicates a hazard of unexpected moving of stopped machine.

Lower working device to ground, move safety lever to lock position and take engine key with you before leaving machine.

3 Precautions when traveling in reverse (421-93-H1360)

Sign indicates to prevere severe injury or death

Honk to alert people nearby. Be sure no one is on or near machine. Use spotter if view is obstructed.

4 Use Komatsu oil only (421-93-H1390)

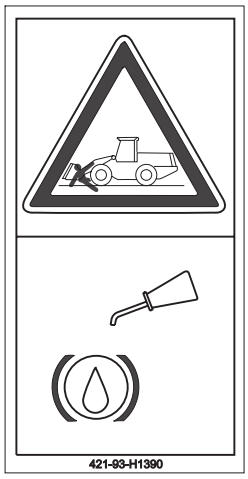

https://truckmanualshub.com/

5 Do not enter (421-93-H1320)

Sign indicates a crush hazard between the articulating parts of the vehicle.

Keep away from the vehicle when it is move.

6 Precautions for safety bar (421-93-H1330)

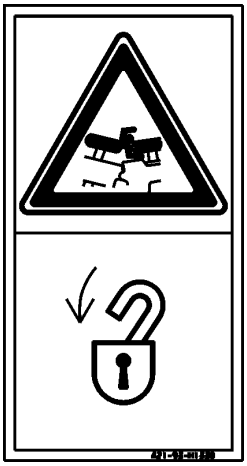

Sign indicates a crush hazard between the articulating parts of vehicle.

Lock vehicle with lock bar to avoid movement during maintenance, inspection and transportation.

7 Precautions when coolant is at high temperature (421-93-H1280)

Sign indicates a burn hazard from spurting hot water if radiator is uncapped while hot.

Allow radiator to cool before removing cap.

8 Precautions when oil is at high temperature (421-93-H1280)

Sign indicates a burn hazard from spurting hot water if radiator is uncapped while hot.

Allow radiator to cool before removing cap.

9 Precautions when handling battery cable (421-93-H1310)

Sign indicates a hazard of falling.

Do not stand on this place here.

10 High pressure warning (421-93-H1300)

Sign indicates a hazard of rotating parts, such as belt.

Turn off engine before inspection and maintenance.

https://truckmanualshub.com/

11 Do not climb on fender (421-93-H1400)

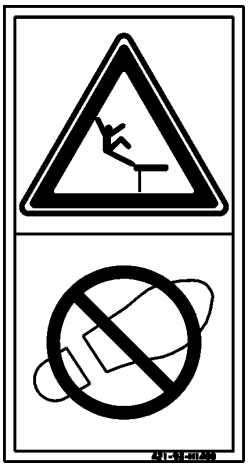

Sign indicates a hazard of falling.

Do not stand on this place here.

12 Do not open when engine is running (09667-A0880)

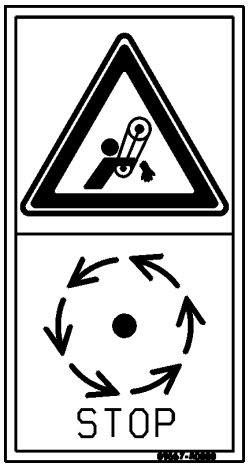

Sign indicates a hazard of rotating parts, such as belt.

Turn off engine before inspection and maintenance.

13 “Do not come under machine“ sign (421-93-H1370)

Sign indicates a hazard of being run over by moving vehicle.

Keep a safe distance from vehicle when it is moving.

14 “Do not go under work equipment“ sign (421-93-H1380)

Sign indicate a crush hazard from falling off of working device.

Keep away when the working device is raised.

16 Only start machine from driver's seat (09842-A0481)

17 Safety measures before starting work (421-93-H1340)

https://truckmanualshub.com/

General precautions

Safety rules

- Only trained and authorized personnel can operate and maintain the machine.
- Follow all safety rules, precautions and instructions when operating or performing maintenance on the machine.
- If you are under the influence of alcohol or medication, your ability to safely operate or repair your machine may be severly impaired putting yourself and everyone else on your jobsite in danger.
- When working with another operator or with a person on worksite traffic duty, be sure that all personnel understand all hand signals that are to be used.

If abnormalities are found

If you find any abnormality in the machine during operation or maintenance (noise, vibration, smell, incorrect gauges, smoke, oil leakage, etc., or any abnormal display on the warning devices or monitor), report to the person in charge and have the necessary action taken. Do not operate the machine until the abnormality has been corrected.

Clothing and personal protective items

- Do not wear loose clothing and accessories. There is a hazard that they may catch on control levers or other protruding parts.
- If you have long hair and it hangs out from your hard hat, there is a hazard that it may get caught up in the machine, so tie your hair up and be careful not to let it get caught.
- Always wear a hard hat and safety shoes. If the nature of the work requires it, wear safety glasses, mask, gloves, ear plugs, and safety belt when operating or maintaining the machine.
- Check that all protective equipment functions properly before using it.

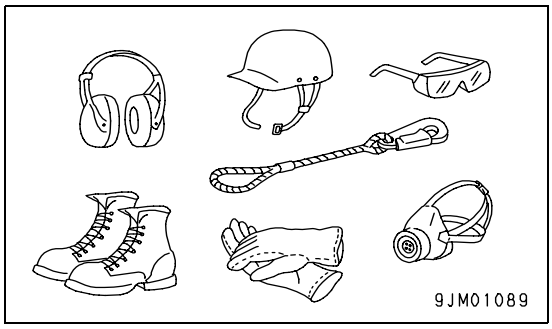

Fire extinguisher and first aid kit

Always follow the precautions below to prepare for action if any injury or fire should occur:

- The fire extinguisher can be fastened to the inside cabin wall on the left.
- If, in the course of certain operations, there is danger of fire, fire extinguishers must be at hand. Familiarise with the use of the fire extinguishers.
- Inform yourself on measures to be taken in the event of a fire.

- The first-aid kit can be positioned on the right of the cabin's interior.
- Make sure that you know all telephone numbers of the persons that you need to contact in an emergency.

Fastening points

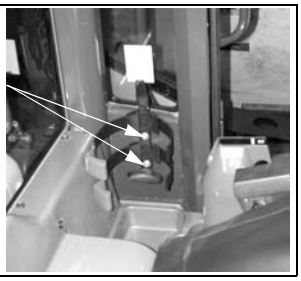

https://truckmanualshub.com/

Safety features

- Be sure that all guards and covers are in their proper position. Have guards and covers repaired immediately if they are damaged.
- Understand the method of use of safety features and use them properly.
- Never remove any safety features. Always keep them in good operating condition.

Keep machine clean

- If water gets into the electrical system, there is a hazard that it will cause malfunctions or misoperation. Do not use water or steam to wash the electrical system (sensors, connectors).
- If inspection and maintenance is carried out when the machine is still dirty with mud or oil, there is a hazard that you will slip and fall, or that dirt or mud will get into your eyes. Always keep the machine clean.

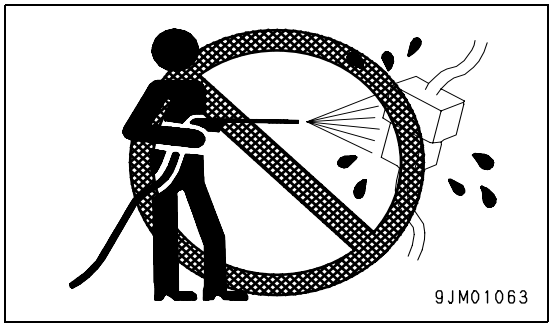

Inside operator’s compartiment

- When entering the operator's compartment, always remove all mud and oil from the soles of your shoes.
  If you operate the pedal with mud or oil affixed to your shoes, your foot may slip and this may cause a serious accident.
- Do not leave parts or tools lying around the operator's compartment.
- Do not stick suction pads to the window glass. Suction pads act as a lens and may cause fire.
- Do not use cellular telephones inside the operator's compartment when driving or operating the machine.
- Never bring any dangerous objects such as flammable or explosive items into the operator's compartment.

https://truckmanualshub.com/

Always apply lock when leaving operator’s seat

- Before standing up from the operator's seat (such as when adjusting the operator's seat), always lower the work equipment completely to the ground, set safety lock lever (1) to the LOCK position, pull parking brake lever (2) to the LOCK position, then stop the engine.
  If you accidentally touch the levers when they are not locked, there is a hazard that the machine may suddenly move and cause serious injury or property damage.

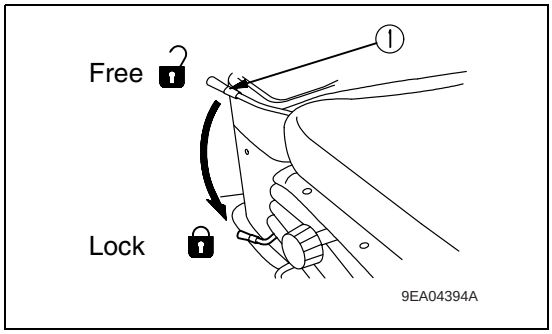

- When leaving the machine, always lower the work equipment completely to the ground, set safety lock lever (1) to the LOCK position, pull parking brake lever (2) to the LOCK position, then stop the engine. Use the key to lock all the equipment. Always remove the key, take it with you, and keep it in the specified place.

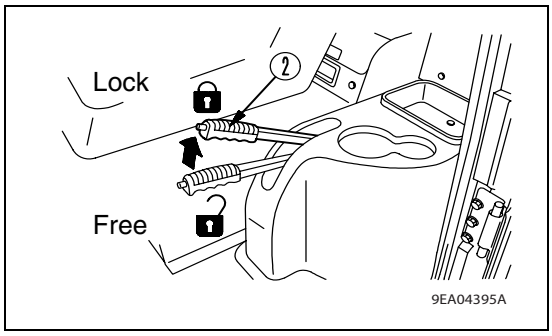

https://truckmanualshub.com/

Handrails and steps

To prevent personal injury caused by slipping or falling off the machine, always do as follows.

- Use the handrails and steps marked by arrows in the diagram on the right when getting on or off the machine.

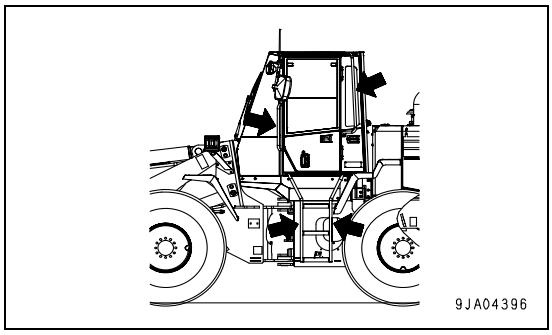

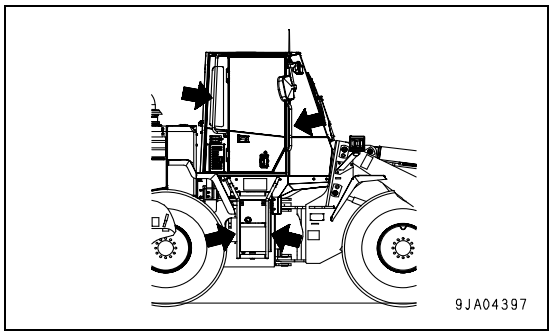

- To ensure safety, always face the machine and maintain three-point contact (both feet and one hand, or both hands and one foot) with the handrails and steps to ensure that you support yourself.

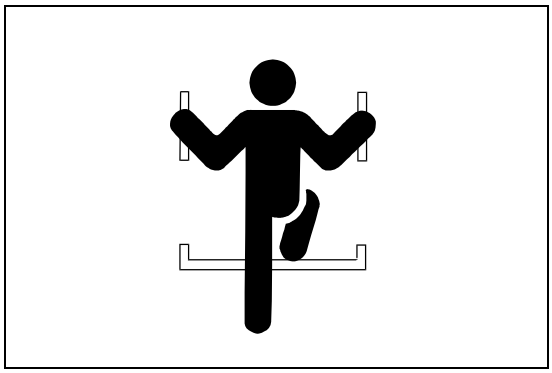

- When entering the cab, open the cab door, push the door securely into catcher (1) to hold in position, then use the handrail on the inside to get on the machine.
  For details of the method of releasing the door lock, see “Cab door open lock on page 3-44“.
- Do not grip the control levers when getting on or off the machine.
- Never climb on the engine hood or covers where there are no non-slip pads.
- Never move from the step at the rear of the machine or the step at the side of the cab to stand on top of the tire.
- Before getting on or off the machine, check the handrails and steps, and if there is any oil, grease, or mud on them, wipe it off immediately. In addition, repair any damage and tighten any loose bolts.
- Do not get on or off the machine while holding tools in your hand.

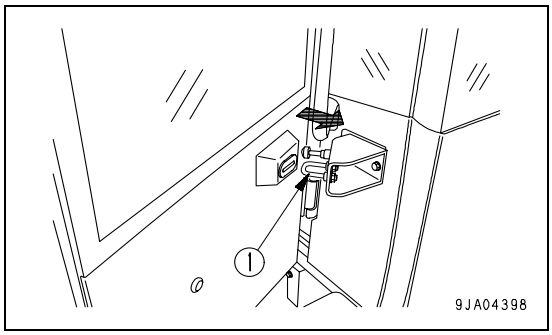

https://truckmanualshub.com/

Mounting and dismounting

- Never jump on or off the machine. Never get on or off a moving machine.
- If the machine starts to move when there is no operator on the machine, do not jump on to the machine and try to stop it.

No people on attachments

Never let anyone ride on the work equipment, or other attachments. There is a hazard of falling and suffering serious injury.

Do not get caught in articulated portion

- If the clearance at the articulating portion changes, it will lead to serious personal injury.
  Do not allow anyone to come inside the articulation range.
- Never enter or put your hand, arm, or any part of your body in the movable portion between the work equipment and machine or between the cylinder and the work equipment. If someone operates the control levers by mistake, the gap between the work equipment and machine and between the cylinder and work equipment will change, and you, your hand, or arm will be caught and you may suffer serious injury.
  If you have to go into a movable portion, always take action to secure the work equipment and ensure that it cannot move.

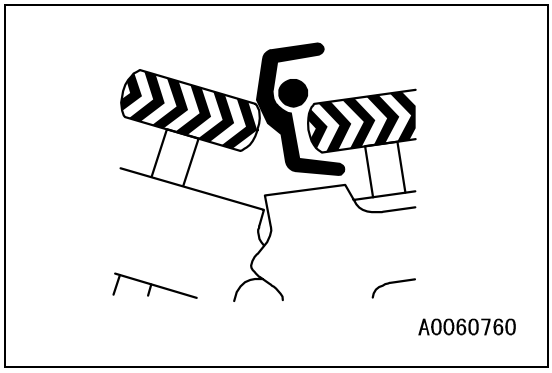

Preventions of burns

Hot coolant

- To prevent burns from hot water or steam spurting out when checking or draining the coolant, wait for the water to cool to a temperature where it is possible to touch the radiator cap by hand before starting the operation. Even when the coolant has cooled down, loosen the cap slowly to relieve the pressure inside the radiator before removing the cap.

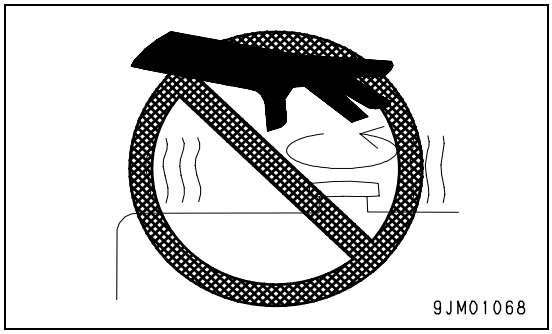

Hot oil

- To prevent burns when checking or draining the oil, wait for the oil to cool to a temperature where it is possible to touch the plug by hand before starting the operation. Even when the oil has cooled down, loosen the plug slowly to relieve the internal pressure before removing the plug.

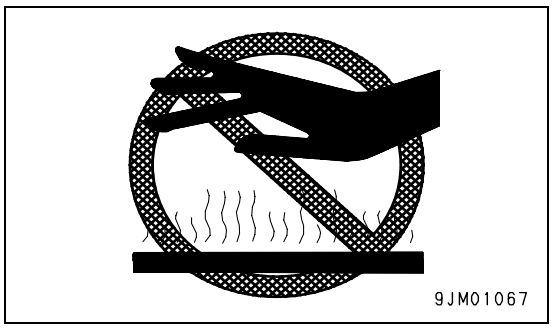

https://truckmanualshub.com/

Fire prevention

- **Fire caused by fuel or oil**
  Fuel, oil, antifreeze, and window washer liquid are particularly flammable and can be hazardous. To prevent fire, always observe the following:
  - Do not smoke or use any flame near fuel or oil.
  - Stop the engine before refueling.
  - Do not leave the machine while adding fuel or oil.
  - Tighten all fuel and oil caps securely.
  - Do not spill fuel on overheated surfaces or on parts of the electrical system.
  - Use well-ventilated areas for adding or storing oil and fuel.
  - Keep oil and fuel in the determined place and do not allow unauthorized persons to enter.
  - After adding fuel or oil, wipe up any spilled fuel or oil.
  - When carrying out grinding or welding work on the chassis, move any flammable materials to a safe place before starting.
  - When washing parts with oil, use a non-flammable oil. Diesel oil and gasoline may catch fire, so do not use them.
  - Put greasy rags and other flammable materials into a safe container to maintain safety at the work place.
  - Do not weld or use a cutting torch to cut any pipes or tubes that contain flammable liquids.

A0055020

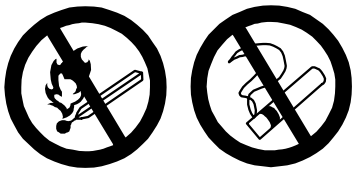
A0055040

- **Fire caused by accumulation of flammable material.**
  Remove any dry leaves, chips, pieces of paper, dust, or any other flammable materials accumulated or affixed around the engine, exhaust manifold, muffler, or battery, or inside the undercovers.

- **Fire coming from electric wiring**
  Short circuits in the electrical system can cause fire.
  - Always keep electric wiring connections clean and securely tightened.
  - Check the wiring every day for looseness or damage. Tighten any loose connectors or wiring clamps. Repair or replace any damaged wiring.

- **Fire coming from hydraulic line**
  Check that all the hose and tube clamps, guards, and cushions are securely fixed in position.
  If they are loose, they may vibrate during operation and rub against other parts. This may lead to damage to the hoses, and cause high-pressure oil to spurt out, leading to fire damage or serious injury.

- **Explosion caused by lighting equipment**
  - When checking fuel, oil, battery electrolyte, window washer fluid, or coolant, always use lighting with anti-explosion specifications. If such lighting equipment is not used, there is danger of explosion that may cause serious injury.
  - When taking the electrical power for the lighting from the machine itself, follow the instructions in this manual.

Action if fire occurs

If a fire occurs, escape from the machine as follows.
- Turn the start switch OFF to stop the engine.
- Use the handrails and steps to get off the machine.

Window washer liquid

Use an ethyl alcohol base washer liquid.
Methyl alcohol base washer liquid may irritate your eyes, so do not use it.

https://truckmanualshub.com/

ROPS (Roll Over Protective Structure)

- The roll-over protection system (ROPS) protects the operator and absorbs load and impact energy, if the machine should roll over.
- The ROPS is a fixed component of the cab. The machine must not be operated without this roll-over protection system.
- The ROPS meets the regulations of all member states of the EU. If, however, the ROPS is modified, damaged, or repaired without permission, its stability is impaired. In this case, the ROPS must be replaced, since its correct function can no longer be guaranteed.
- The ROPS can only provide maximum protection, if the driver wears the safety belt correctly. For this reason, the safety belt is to be worn when the machine is in operation.

Attachment for protection against falling objects (FOPS)

NOTICE

FOPS is a fixed component of the cab.

When you work on a site where there is danger of falling rocks or other objects, the machines must be equipped with a FOPS. If the FOPS is modified without permission or damaged, its stability is impaired. In this case, the FOPS must be replaced, since its correct function can no longer be guaranteed.

Precautions for attachments

- When installing optional parts or attachments, there may be problems with safety or legal restrictions. Therefore contact your Komatsu distributor for advice.
- Any injuries, accidents, or product failures resulting from the use of unauthorized attachments or parts will not be the responsibility of Komatsu.
- When installing and using optional attachments, read the instruction manual for the attachment, and the general information related to attachments in this manual.

Unauthorized modification

Any modification made without authorization from Komatsu can create hazards. Before making a modification, consult your Komatsu distributor.

- Komatsu will not be responsible for any injuries, accidents, product failures or other property damages resulting from modifications made without authorization from Komatsu.

Safety at worksite

Before starting operations, thoroughly check the area for any unusual conditions that could be dangerous.

- When carrying out operations near combustible materials such as thatched roofs, dry leaves or dry grass, there is a hazard of fire, so be careful when operating.
- Check the terrain and condition of the ground at the worksite, and determine the safest method of operation. Do not carry out operations at places where there is a hazard of landslides or falling rocks.
- If water lines, gas lines, or high-voltage electrical lines may be buried under the worksite, contact each utility and identify their locations. Be careful not to sever or damage any of these lines.
- Take action to prevent unauthorized people from approaching the jobsite.
  When working on public roads, position flagmen and erect barriers to ensure the safety of passing traffic and pedestrians.
- When traveling or operating in shallow water or on soft ground, check the shape and condition of the bedrock, and the depth and speed of flow of the water before starting operations.
- In order that travel operations can be carried out safely, always keep the roads on the jobsite properly maintained.

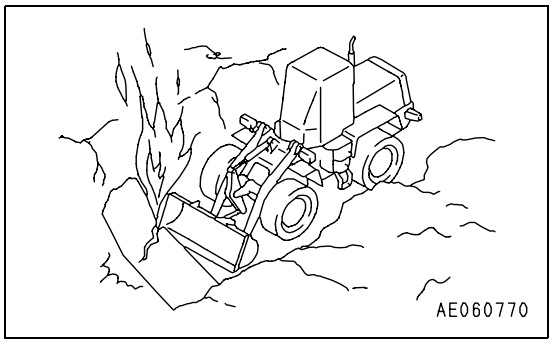

https://truckmanualshub.com/

Working on loose ground

- Avoid traveling or operating your machine too close to the edge of cliffs, overhangs, and deep ditches. The ground may be weak in such areas. If the ground should collapse under the weight or vibration of the machine, there is a hazard that the machine may fall or tip over. Remember that the soil after heavy rain or blasting or after earthquakes is weak in these areas.
- When working on embankments or near excavated ditches, there is a hazard that the weight and vibration of the machine will cause the soil to collapse. Before starting operations, take steps to ensure that the ground is safe and to prevent the machine from rolling over or falling.

Do not go close to high-voltage cables

Do not travel or operate the machine near electric cables. There is a hazard of electric shock, which may cause serious injury or property damage. On jobsites where the machine may go close to electric cables, always do as follows:

- Before starting work near electric cables, inform the local power company of the work to be performed, and ask them to take the necessary action.

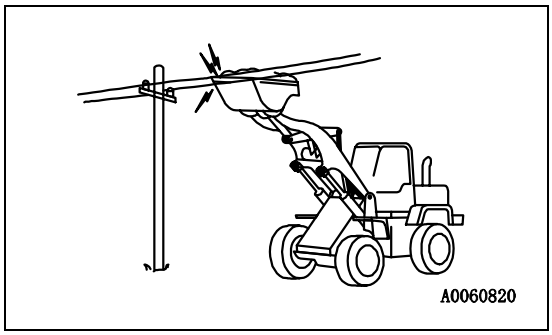

- Even going close to high-voltage cables can cause electric shock, which may cause serious burns or even death. Always maintain a safe distance (see the table on the right) between the machine and the electric cable. Check with the local power company about safe operating procedure before starting operations.
- To prepare for any possible emergencies, wear rubber shoes and gloves. Lay a rubber sheet on top of the seat, and be careful not to touch the chassis with any exposed part of your body.
- Use a signalman to give warning if the machine approaches too close to the electric cables.
- When carrying out operations near high voltage cables, do not let anyone come close to the machine.
- If the machine should come too close or touch the electric cable, to prevent electric shock, the operator should not leave the operator's compartment until it has been confirmed that the electricity has been shut off.
  Also, do not let anyone come close to the machine.

Nominal Voltage		Safety Distance
	up to 1000 V	1 m
over 1 kV	up to 110 kV	3 m
over 110 kV	up to 220 kV	4 m
over 220 kV	up to 380 kV	5 m
with unknown nominal voltage		5 m

Ensure good visibility

Check for any persons or obstacles in the area around the machine and check the conditions of the jobsite to ensure that operations and travel can be carried out safely. Always do as follows.

- Position a signalman if there are areas at the rear of the machine where the visibility is not good.
- When working in dark places, turn on the working lamp and front lamps installed to the machine, and set up additional lighting in the work area if necessary.
- Stop operations if the visibility is poor, such as in mist, snow, rain, or dust.

https://truckmanualshub.com/

Ventilation for enclosed areas

Exhaust fumes from the engine can kill.
If it is necessary to start the engine within an enclosed area, or when handling fuel, flushing oil, or paint, open the doors and windows to ensure that adequate ventilation is provided to prevent gas poisoning.

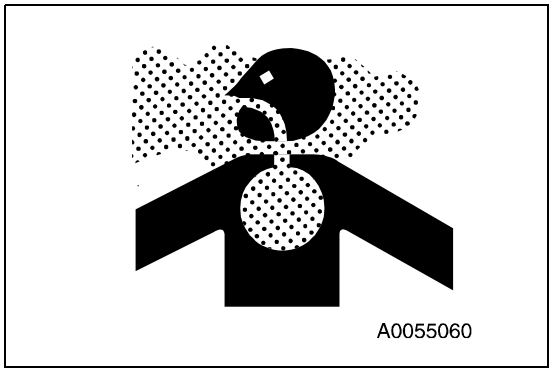

Checking signalman's signals and signs

- Set up signs to inform of road shoulders and soft ground. If the visibility is not good, position a signalman if necessary. Operators should pay careful attention to the signs and follow the instructions from the signalman.
- Only one signalman should give signals.
- Make sure that all workers understand the meaning of all signals and signs before starting work.

Emergency exit from operator's cab

Machines equipped with a cab have doors on the left and right sides. If the door on the one side does not open, escape from the door on the other side.

Be careful about asbestos dust

Asbestos dust in the air can cause lung cancer if it is inhaled. There is danger of inhaling asbestos when working on jobsites handling demolition work or work handling industrial waste. Always observe the following.

- Spray water to keep down the dust when cleaning. Do not use compressed air for cleaning.
- If there is danger that there may be asbestos dust in the air, always operate the machine from an upwind position. All workers should use an approved respirator.
- Do not allow other persons to approach during the operation.
- Always observe the rules and regulations for the work site and environmental standards.

This machine does not use asbestos, but there is a danger that imitation parts may contain asbestos, so always use genuine Komatsu parts.

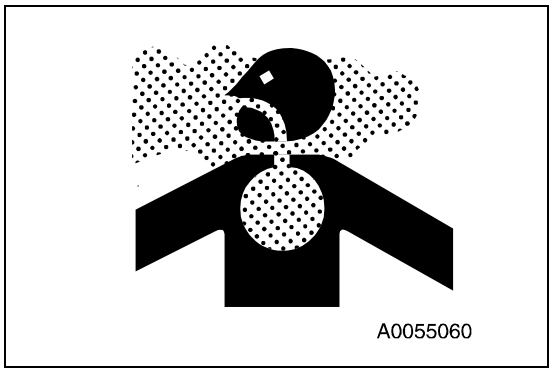

Gas, dust, and inflammable vapours

Do not operate combustion engines in an environment that may contain inflammable gases or vapours. These gases, dusts, or vapours may ignite or be sucked in by the suction system, thus causing a rise in engine speed or an exceeding of the engine's maximum rpm. This may lead to a fire, an explosion, and major damage to property. It may also happen that the engine cannot be switched off anymore.

Mirrors, windows and lighting

- Clean the windows and the headlights to ensure maximum sight.
- Adjust the rear-view mirror in such a way that you have an excellent view of the rear from the driver's seat. Keep the mirrors clean. See "Adjust rear view mirror on page 3-65".
- Ensure that the complete lighting system operates properly and that it is correctly adjusted.
- Immediately replace broken window panes by new ones.

https://truckmanualshub.com/

Precautions for operation

Starting engine

If there is a warning tag hanging from the work equipment control lever, do not start the engine or touch the levers.

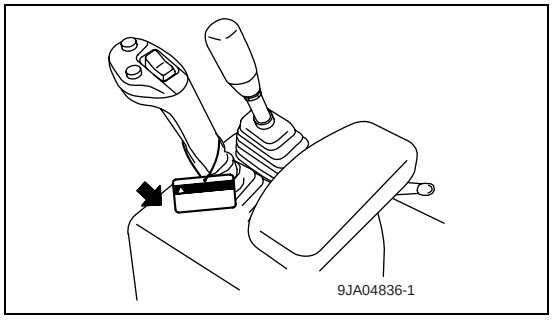

Checks before starting engine

Carry out the following checks before starting the engine at the beginning of the day's work.

- Remove all dirt from the surface of the window glass to ensure a good view.
- Remove all dirt from the surface of the lens of the front lamps, working lamps, and rear combination lamp, and check that they light up correctly.
- Check the coolant level, fuel level, and oil level in engine oil pan, check for clogging of the air cleaner, and check for damage to the electric wiring.
- Check that there is no mud or dust accumulated around the movable parts of the accelerator pedal or brake pedal, and check that the pedals work properly.
- Adjust the operator's seat to a position where it is easy to carry out operations, and check that there is no damage or wear to the seat belt or mounting clamps.
- Check that the gauges work properly, check the angle of the lights and working lamps, and check that the control levers are all at the neutral position.
- Before starting the engine, make sure that the safety lock lever is in the LOCK position.
- Adjust the mirrors so that the rear of the machine can be seen clearly from the operator's seat. See “Adjust rear view mirror on page 3-65“.
- Check that there are no persons or obstacles above, below, or in the area around the machine.

Precautions when starting

- Only start and operate the machine from the seat. Never try to start the engine by hot-wiring the ignition. This can cause fire, grave injuries or death.
- When starting the engine, sound the horn as a warning.
- Do not allow anyone apart from the operator to ride on the machine.
- For machines equipped with a back-up alarm, check that the alarm works properly.

Precautions in cold areas

- Carry out the warming-up operation thoroughly. If the machine is not thoroughly warmed up before the control levers are operated, the reaction of the machine will be slow, and this may lead to unexpected accidents.
- If the battery electrolyte is frozen, do not charge the battery or start the engine with a different power source. There is a hazard that this will ignite the battery and cause the battery to explode.
  Before charging or starting the engine with a different power source, melt the battery electrolyte and check that there is no leakage of electrolyte before starting.

https://truckmanualshub.com/

Operation

Checks before operation

When carrying out the checks, move the machine to a wide area where there are no obstructions, and operate slowly. Do not allow anyone near the machine.

- Always fasten your seat belt.
- Check the operation of travel, steering and brake systems, and work equipment control system.
- Check for any abnormality in the sound of the machine, vibration, heat, smell, or gauges; check also that there is no leakage of oil or fuel.
- If any abnormality is found, carry out repairs immediately.

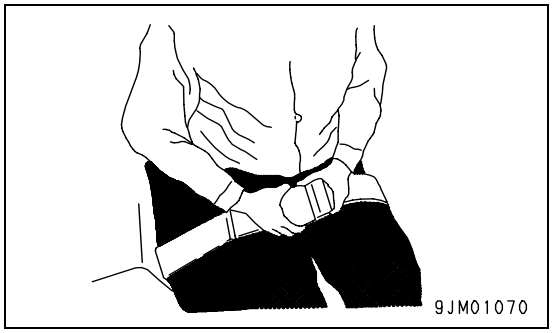

- Before driving the machine or starting operations, check that safety bar (1) is securely fixed at the FREE position.

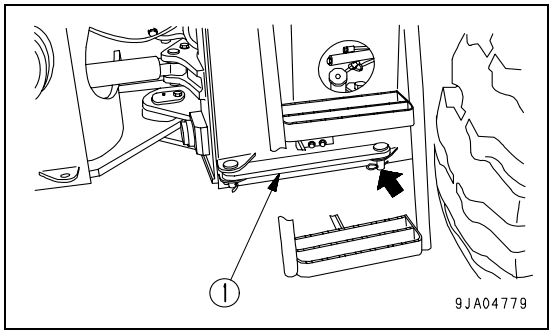

Precautions when traveling in foreward or reverse

- Before travelling, check again that there is no one in the surrounding area, and that there are no obstacles.
- Before travelling, sound the horn to warn people in the area.
- Always operate the machine only when seated.
- Do not allow anyone apart from the operator to ride on the machine.
- Check that the back-up alarm (alarm buzzer when machine travels in reverse) works properly.
- Always lock the door and windows of the operator's compartment in position (open or closed).
  On jobsites where there is a hazard of flying objects or of objects entering the operator's compartment, check that the door and windows are securely closed.
- If there is an area to the rear of the machine which cannot be seen, position a signal person. Take special care not to hit other machines or people when turning or swinging the machine.

Always be sure to carry out the above precautions even when the machine is equipped with mirrors.

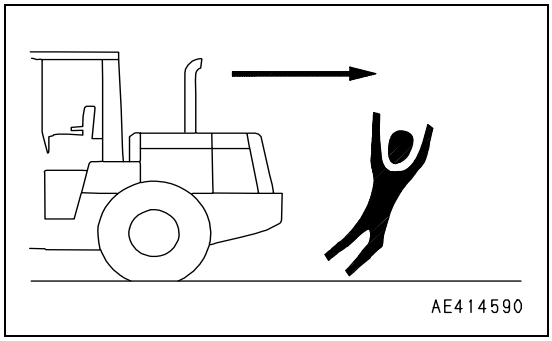

https://truckmanualshub.com/

Precautions when traveling

- Never turn the key in the starting switch to the OFF position. It is dangerous if the engine stops when the machine is traveling, because the steering becomes heavy. If the engine stops, depress the brake pedal immediately to stop the machine.
- When traveling on level ground, keep the work equipment at height of 27 cm from the ground.
  When traveling, do not operate the work equipment control levers. If the work equipment control levers have to be operated, stop the machine first, then operate the levers.
- When traveling on rough ground, travel at low speed and do not operate the steering suddenly. There is danger that the machine may turn over. The work equipment may hit the ground surface and cause the machine to lose its balance, or may damage the machine or structures in the area.
- Avoid traveling over obstacles when possible. If the machine has to travel over an obstacle, keep the work equipment close to the ground and travel at low speed. Never travel over obstacles which make the machine tilt strongly to one side.
- When traveling or carrying out operations, always keep a safe distance from people, structures, or other machines to avoid coming into contact with them.
- When passing over bridges or structures, check first that the structure is strong enough to support the weight of the machine. When traveling on public roads, check first with the relevant authorities and follow their instructions.
- When operating in tunnels, under bridges, under electric wires, or other places where the height is limited, operate slowly and be extremely careful not to let the work equipment hit anything.
- Always obey the traffic regulations when traveling on public roads. This machine travels at a lower speed than normal automobiles, so keep to the side of the road and be careful to leave the center of the road free for other vehicles.
- If you drive the machine at high speed continuously for a long time, the tires will overheat and the internal pressure will become abnormally high. This may cause the tires to burst. If a tire bursts, it produces an extremely large destructive force, and this may cause serious injury or accident.
  If you are going to travel continuously, please consult your Komatsu distributor.

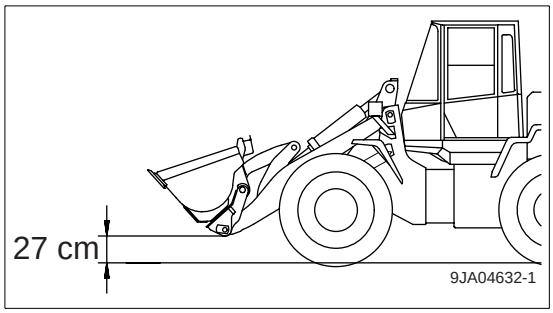

Height limitation

When working in areas with height limitations, e.g. in tunnels, beneath bridges or power transmission lines, or in garages, pay attention that the work unit does not touch or damage these facilities.

https://truckmanualshub.com/

Traveling on slopes

To prevent the machine from tipping over or slipping to the side, always do as follows:

- When traveling on slopes, keep the bucket at height “A“ of approximately 20 to 30 cm (8 to 12 in) above the ground. In case of emergency, quickly lower the bucket to the ground to help the machine to stop.

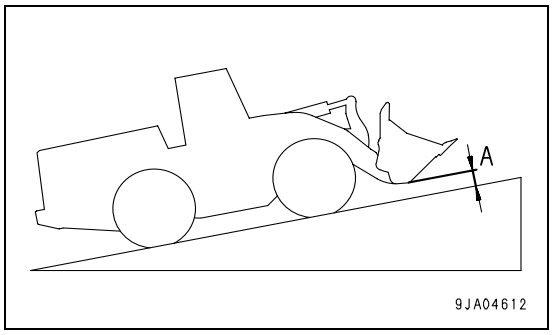

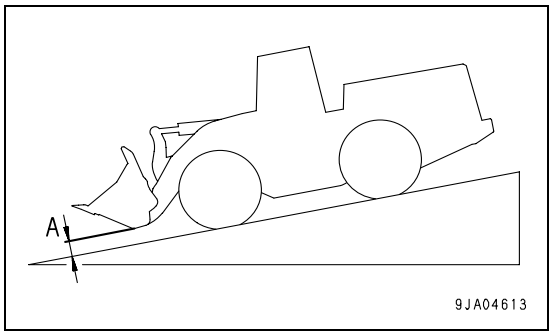

- Always travel straight up or down a slope. Traveling at an angle or across the slope is extremely dangerous.
- Do not turn on slopes or travel across slopes. Always go down to a flat place to change the position of the machine, then travel on to the slope again.
- Travel on grass, fallen leaves, or wet steel plates with low speed. Even with slight slopes there is a hazard that the machine may slip.
- If the engine stops, depress the brake pedal immediately, lower the bucket to the ground, and apply the parking brake to stop the machine.
- When traveling downhill, never shift gear or place the transmission at neutral. It is dangerous not to use the braking force of the engine. Always place the transmission in a low gear before starting to travel downhill.
- When traveling downhill, travel slowly. If necessary, use the braking force of the engine together with the brake pedal to control the travel speed.
- When traveling up or down hills with a loaded bucket, always travel with the bucket facing uphill. If the machine travels with the bucket facing downhill, there is danger that the machine may tip over.

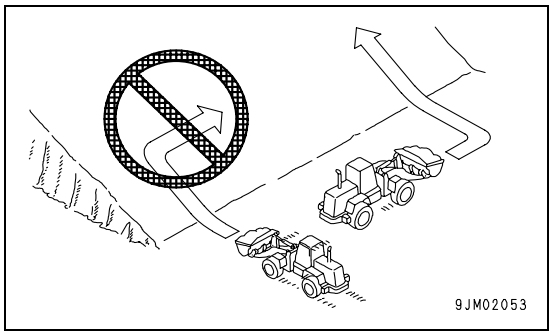

https://truckmanualshub.com/

Prohibited operations

- It is dangerous to excavate the bottom of a rock face. Never do this.

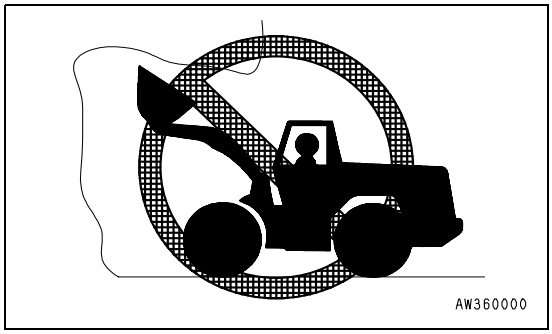

- It is dangerous to use the bucket or lift arm for crane operations, so do not carry out such operations.

- Do not pass the bucket over the head of other workers or over the operator's seat of dump trucks or other hauling equipment. The load may spill or the bucket may hit the dump truck and cause serious injury or property damage.

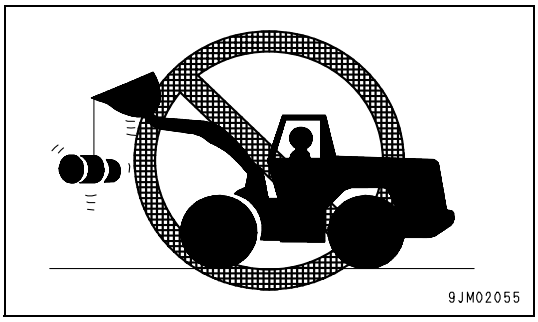

Emergency lowering system

When the engine is not running, you can lower the work unit by means of the pilot control lever.

- PPC control lever

To achieve this, slowly press the pilot control lever (2) forward to the "LOWER" position.

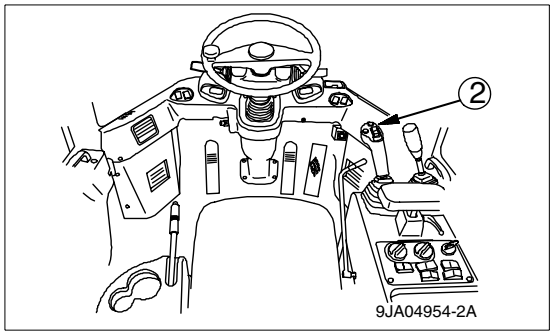

- EPC control lever

1. Turn the key in ignition switch (1) to ON.
2. Then slowly press the pilot control lever (2) forward to the "LOWER" position.

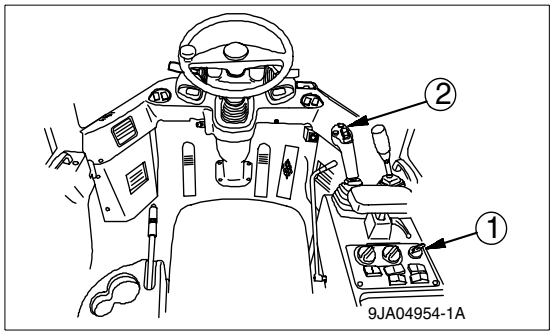

https://truckmanualshub.com/

Precautions when operating

- When using the machine, to prevent the machine from overturning due to overloading and to avoid damage to the work equipment, do not exceed the maximum permitted load or performance of the machine.
- If the engine cannot be started again after it has stopped, immediately operate the work equipment control levers to lower the work equipment to the ground. (After the engine stops, the accumulator allows the work equipment to be operated for a limited time.)
- Be careful not to approach too close to the edge of cliffs. When making embankments or landfills, or when dropping soil over a cliff, dump one pile, then use the next pile of soil to push the first pile.
- The load suddenly becomes lighter when the soil is pushed over a cliff or when the machine reaches the top of a slope. When this happens, there is danger that the travel speed will suddenly increase, so be sure to reduce the speed.
- When the bucket is fully loaded, never start, turn, or stop the machine suddenly. There is danger of the machine turning over.

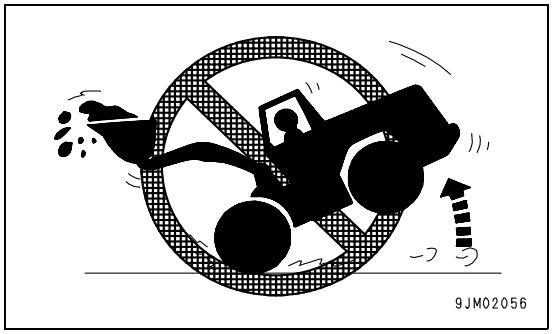

- When handling unstable loads, such as round or cylindrical objects, or piled sheets, if the work equipment is raised high, there is danger that the load may fall on top of the operator' compartment and cause serious injury or damage.
- When handling unstable loads, be careful not to raise the work equipment too high or tip the bucket back too much.
- If the work equipment is suddenly lowered or suddenly stopped, the reaction may cause the machine to tip over. Particularly when carrying a load, be sure to operate the work equipment carefully.

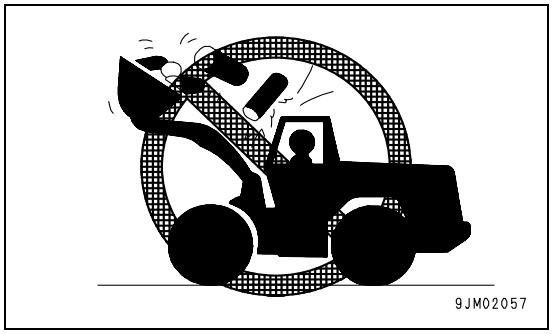

- When operating in tunnels, under bridges, under electric wires, or other places where the height is limited, be extremely careful not to let the work equipment hit anything.
- To prevent accidents caused by hitting other objects, always operate the machine at a speed which is safe for operation, particular in confined spaces, indoors, and in places where there are other machines.

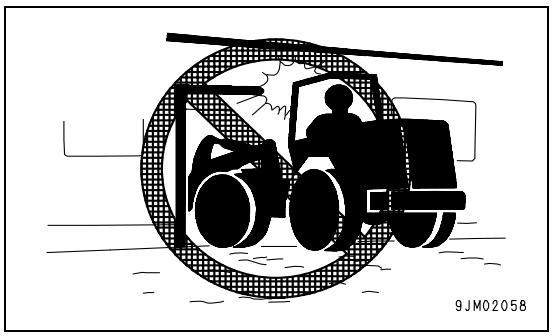

Methods of using brake

- When the machine is traveling, do not rest your foot on the brake pedal. If you travel with your foot resting on the pedal, the brake will always be applied, and this will cause the brakes to overheat and fail.
- Do not depress the brake pedal repeatedly if not necessary.
- When traveling downhill, use the braking force of the engine. If necessary, use the brake pedal at the same time.

https://truckmanualshub.com/

Operate carefully on snow

- Snow-covered or frozen surfaces are slippery, so be extremely careful when traveling or operating the machine, and do not operate the levers suddenly. Even a slight slope may cause the machine to slip, so be particularly careful when working on slopes.
- With frozen ground surfaces, the ground becomes soft when the temperature rises, and this may cause the machine to tip over.
- If the machine enters deep snow, there is a hazard that it may tip over or become buried in the snow. Be careful not to leave the road shoulder or to get trapped in a snow drift.
- When clearing snow, the road shoulder and objects placed beside the road are buried in the snow and cannot be seen. There is a hazard of the machine tipping over or hitting covered objects, so always carry out operations carefully.
- When traveling on snow-covered roads, always fit tire chains.
- When traveling on snow-covered slopes, never apply the foot brake suddenly. Reduce the speed and use the engine as a brake while applying the foot brake intermittently (depress the brake intermittently several times). If necessary, lower the bucket to the ground to stop the machine.

https://truckmanualshub.com/

Parking machine

- Park the machine on firm, level ground.
- Select a place where there is no hazard of falling rocks or landslides, or of flooding if the land is low.
- Lower the work equipment completely to the ground.

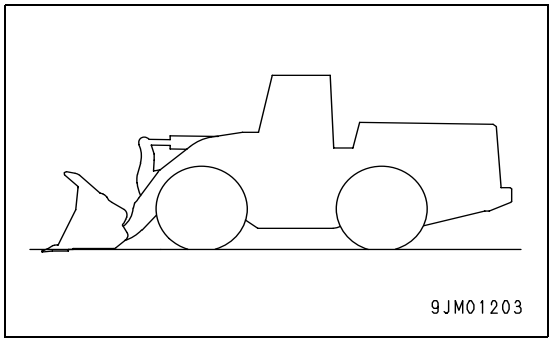

- When leaving the machine, set safety lock lever (1) to the LOCK position, pull parking brake lever (2) to the LOCK position, then stop the engine.
- Always close the operator's cab door, and use the key to lock all the equipment in order to prevent any unauthorized person from moving the machine. Always remove the key, take it with you, and leave it in the specified place.

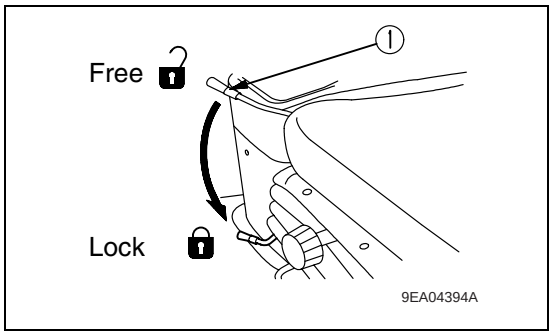

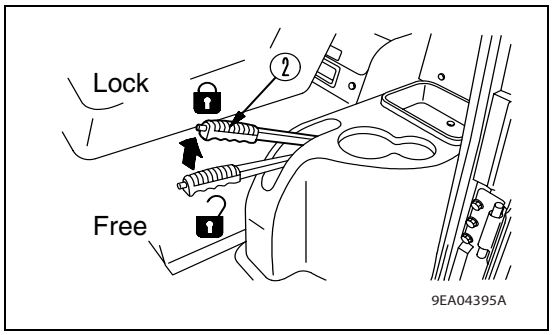

- If it is necessary to park the machine on a slope, set blocks under the wheels to prevent the machine from moving.

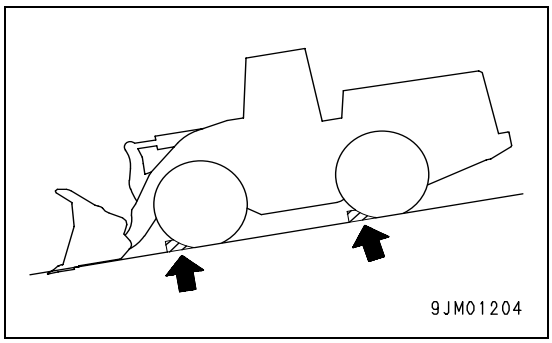

https://truckmanualshub.com/

Transportation

The machine can be divided into parts for transportation, so when transportating the machine, please contact your Komatsu distributor to have the work carried out.

Loading and unloading

When loading or unloading the machine, mistaken operation may bring the hazard of the machine tipping over or falling, so particular care is necessary. Always do as follow:.

- Perform loading and unloading on firm, level ground only. Maintain a safe distance from the edge of the road or cliff.
- Always use ramps of adequate strength. Be sure that the ramps are wide, long, and thick enough to provide a safe loading slope. Take suitable steps to prevent the ramps from moving out of position or coming off.
- Be sure the ramp surface is clean and free of grease, oil, ice and loose materials. Remove dirt from machine-tracks. On a rainy day, in particular, be extremely careful since the ramp surface is slippery.
- Run the engine at low speed and travel slowly.
- Never correct your steering on the ramps. If necessary, drive off the ramps, correct the direction, then enter the ramps again.
- When loading or unloading to an embankment or platform, make sure that it has suitable width, strength, and grade.
- For machines equipped with a cab, always lock the door after boarding the machine. If this is not done, the door may suddenly open during transportation.
  Refer to “Transportation on page 3-98“.

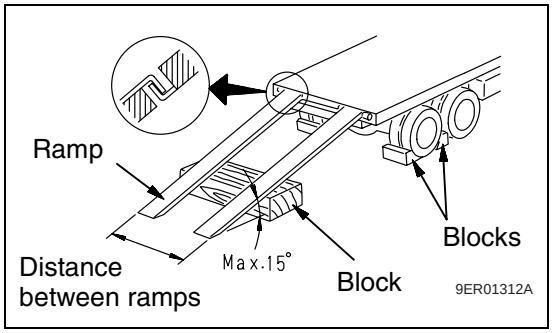

Shipping

When shipping the machine on a trailer, do as follows:

- The weight, transportation height, and overall length of the machine differ according to the work equipment, so be sure to confirm the dimensions.
- When passing over bridges or structures on private land, check first that the structure is strong enough to support the weight of the machine. When traveling on public roads, check first with the relevant authorities and follow their instructions.
- Lock the frame with the safety bar to prevent the machine from articulating.
- For details of the shipping procedure, see “Transportation on page 3-98“ in the OPERATION section.

https://truckmanualshub.com/

Battery

Battery hazard prevention

Battery electrolyte contains sulphuric acid, and batteries generate flammable hydrogen gas, which may explode. Mistaken handling can lead to serious injury or fire. For this reason, always observe the following precautions:

- Do not use or charge the battery if the battery electrolyte level is below the LOWER LEVEL line. This may cause an explosion. Always check the battery electrolyte level periodically and add distilled water to bring the electrolyte level to the UPPER LEVEL line.
- When working with batteries, always wear safety glasses and rubber gloves.
- Never smoke or use any flame near the battery.

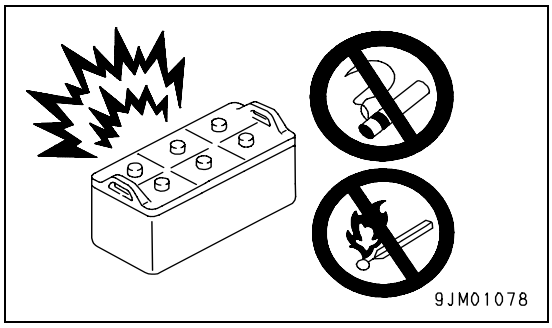

- If you spill acid on your clothes or skin, immediately flush the area with large amount of water.
- If acid gets into your eyes, flush them immediately with large amount of water and seek medical attention.
- Before working with batteries, turn the starting switch to the OFF position.

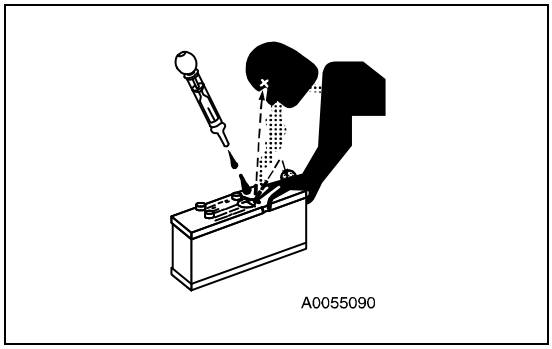

As there is a hazard that sparks will be generated, always do as follows:

- Do not let tools or other metal objects make any contact between the battery terminals. Do not leave tools or other metal objects lying around near the battery.
- Always disconnect the negative (-) terminal (ground side) first when removing the battery; when installing the battery, connect the positive (+) terminal first, and connect the ground last.
- Attach the battery terminal securely.
- Flammable hydrogen gas is generated when the battery is charged, so remove the battery from the chassis, take it to a well-ventilated place, and remove the battery caps before charging it.
- Tighten the battery caps securely.
- Install the battery securely to the determined place.

https://truckmanualshub.com/

Starting with booster cables

If any mistake is made in the method of connecting the booster cables, it may cause the battery to explode, so always do as follows:

- When starting with a booster cable, carry out the starting operation with two workers (one worker sitting in the operator's seat and the other working with the battery).
- When starting from another machine, do not allow the two machines to touch.
- When connecting the booster cables, turn the starting switch OFF for both the normal machine and problem machine. There is a hazard that the machine will move when the power is connected.
- Be sure to connect the positive (+) cable first when installing the booster cables. Disconnect the negative (-) cable (ground side) first when removing them.
- When removing the booster cables, be careful not to let the booster cable clips touch each other or to let the clips touch the machine.
- Always wear safety goggles and rubber gloves when starting the engine with booster cables.
- When connecting a normal machine to a problem machine with booster cables, always use a normal machine with the same battery voltage as the problem machine.
- For details of the starting procedure when using booster cables, see “Starting engine with booster cable on page 3-110“ in the OPERATION section.

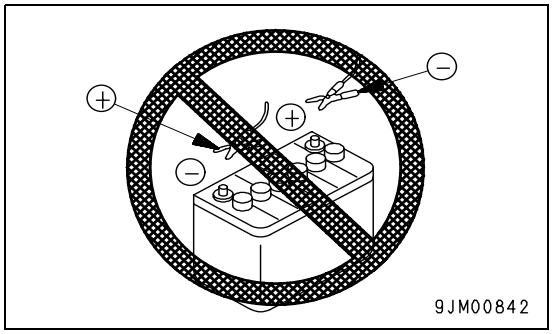

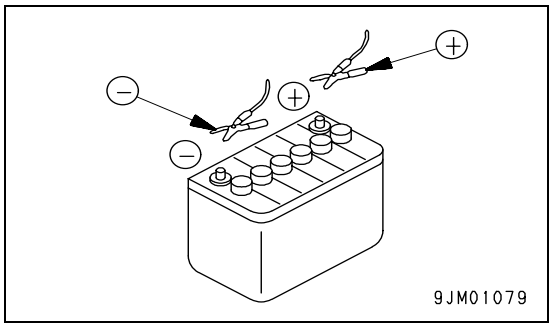

https://truckmanualshub.com/

Towing

When towing

Serious injury or death could result if a disabled machine is towed incorrectly or if there is a mistake in the selection or inspection of the wire rope.

For towing, see “Towing the machine on page 3-107“.

- Always wear leather gloves when handling wire rope.
- During the towing operation, never stand between the towing machine and the machine being towed.
- Never tow a machine on a slope.

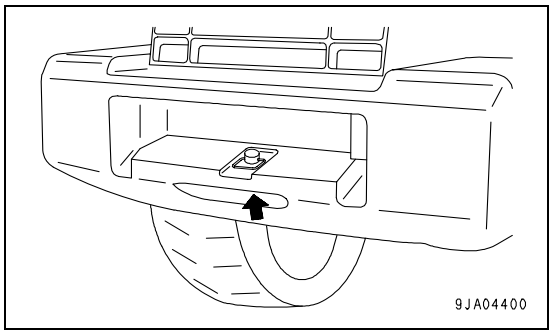

- Never use a wire rope which has cut strands (A), reduced diameter (B), or kinks (C). There is danger that the rope may break during the towing operation.

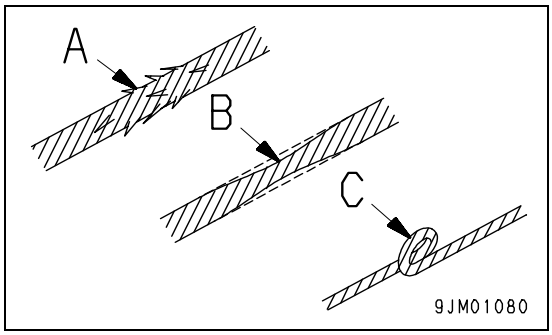

https://truckmanualshub.com/

Precautions for maintenance

Safety instructions

Warning tag

- Always attach the “DO NOT OPERATE“ warning tag to the work equipment control lever in the operator's cab to alert others that you are performing service or maintenance on the machine. Attach additional warning tags around the machine if necessary.

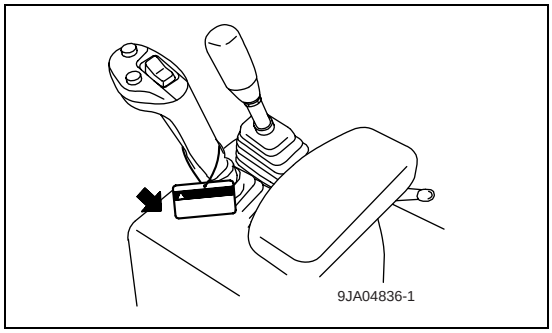

- Warning tag
  Keep this warning tag in the tool box while it is not used. If there is not the tool box, keep the tag in the operation manual pocket.

- If others start the engine, or touch or operate the work equipment control lever while you are performing service or maintenance, you could suffer serious injury or property damage.

Keep work place clean and tidy

Do not leave hammers or other tools lying around in the work place. Wipe up all grease, oil, or other substances that will cause you to slip. Always keep the work place clean the tidy to enable you to carry out operations safely. If the work place is not kept clean and tidy, there is the danger that you will trip, slip, or fall over and injure yourself.

Appoint leader when working with others

When repairing the machine or when removing and installing the work equipment, appoint a leader and follow his instructions during the operation.
When working with others, misunderstandings between workers can lead to serious accidents.

https://truckmanualshub.com/

Maintenance with engine running

- Stop the machine on firm, level ground.
- Select a place where there is no hazard of falling rocks or landslides, or of flooding if the land is low.
- Lower the work equipment completely to the ground and stop the engine.

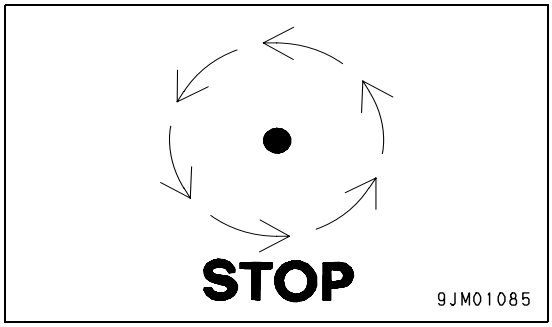

- After stopping the engine, operate work equipment control lever (1) 2 to 3 times fully to the RAISE and LOWER positions to release the pressure inside the hydraulic circuit, then set safety lock lever (2) to the LOCK position.

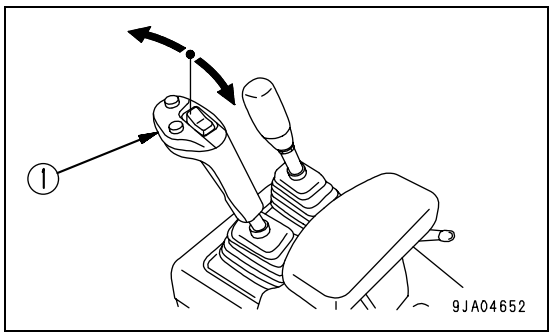

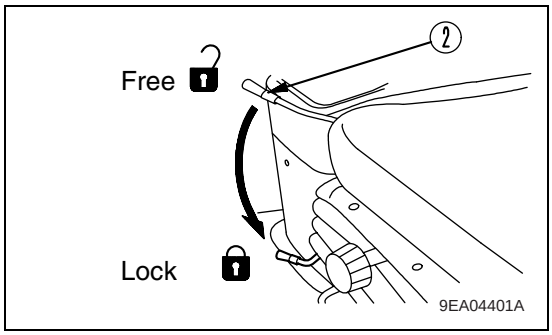

- Pull parking brake lever (3) to the LOCK position, then put blocks under the front and the rear of the tires.

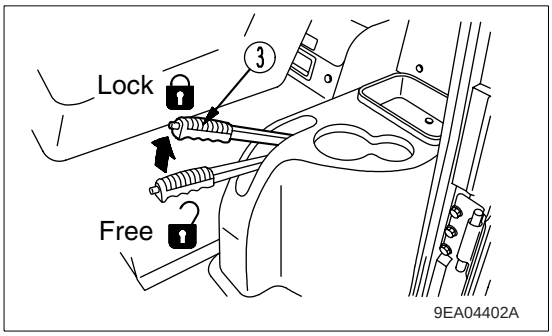

- Lock the front and rear frames with safety bar (4).

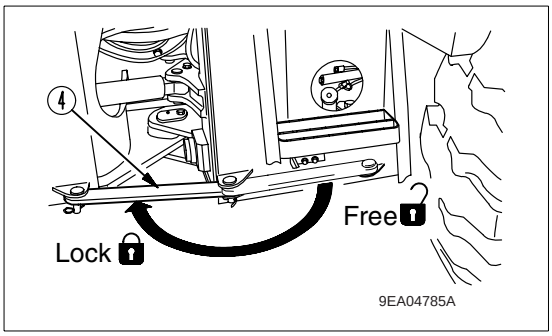

https://truckmanualshub.com/

Two workers for maintenance when engine is running

To prevent injury, do not carry out maintenance with the engine running. If maintenance must be carried out with the engine running, carry out the operation with at least two workers and do as follows:

- One worker must always sit in the operator's seat and be ready to stop the engine at any time. All workers must maintain contact with the other workers.
- When carrying out operations near the fan, fan belt, or other rotating parts, there is a hazard of being caught in the parts, so be careful not to come close.
- Never drop or insert tools or other objects into the fan or fan belt. Parts may break or be sent flying.

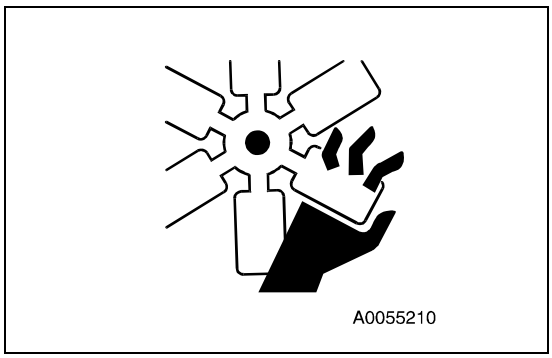

- Set safety lock lever (1) to the LOCK position to prevent the work equipment from moving. Then pull parking brake lever (2) to the position to prevent the machine from moving.
- Do not touch any control levers. If any control lever must be operated, give a signal to the other workers to warn them to move to a safe place.

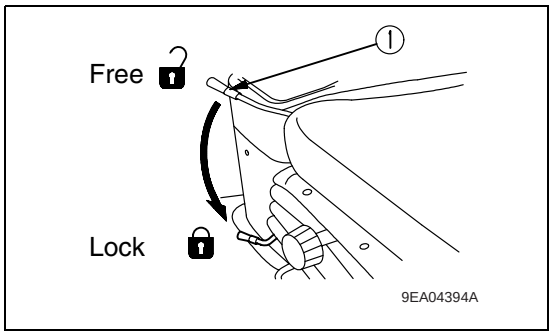

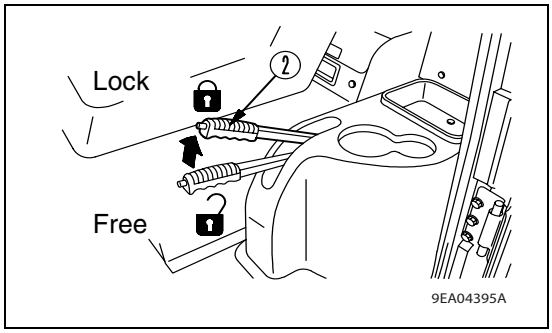

Inspection and maintenance after turning E.C.S.S. switch OFF

For machines equipped with a E.C.S.S. lower the bucket to the ground, turn the E.C.S.S. switch OFF, and stop the engine before starting inspection or maintenance. NEVER turn the switch ON during inspection or maintenance.

Proper tools

Use only tools suited to the task and be sure to use the tools correctly. Using damaged, low quality, faulty, makeshift tools or improper use of the tools could cause serious personal injury.

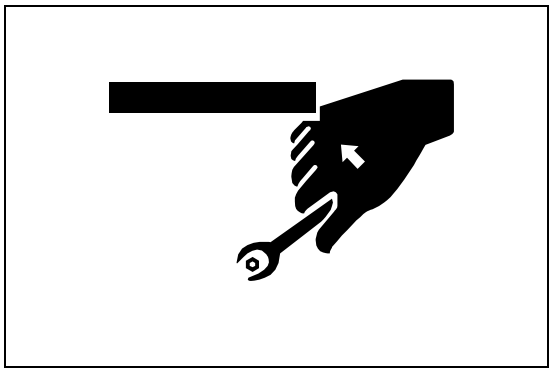

https://truckmanualshub.com/

Accumulator

⚠ WARNING

Danger of injury! Pressure accumulator is filled with highly pressurised nitrogen.
Do not open or damage the pressure accumulator.

The accumulator is charged with high-pressure nitrogen gas. When handling the accumulator, careless procedure may cause an explosion which could lead to serious injury or property damage. For this reason, always observe the following precautions:

- Do not disassemble the accumulator.
- Do not bring it near flame or dispose of it in fire.
- Do not make holes in it, weld it, or use a cutting torch.
- Do not hit or roll the accumulator, or subject it to any impact.
- When disposing of the accumulator, the gas must be released. Please contact your Komatsu distributor to have this work performed.

Personnel

Only authorized personnel can service and repair the machine. Do not allow unauthorized personnel into the area. If necessary, employ an observer.

Attachments

- Appoint a leader before starting removal or installation operations for attachments.
- Place attachments that have been removed from the machine in a stable condition so that they do not fall. And take steps to prevent unauthorized persons from entering the storage area.

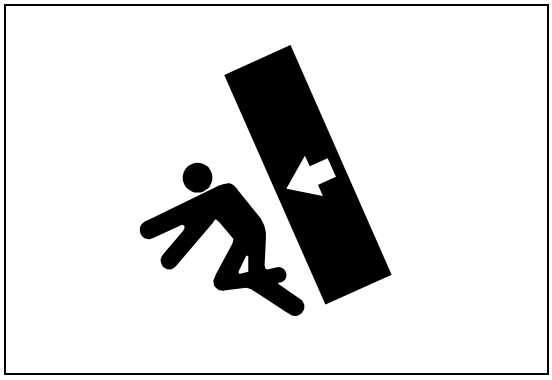

https://truckmanualshub.com/

Working under the raised boom

WARNING

Danger of injury! The raised boom may suddenly fall! For safety reasons, a raised boom must be secured against dropping before you pass or stand under it.

- The boom must be secured against moving if any work is to be carried out under it when it is in a raised position. For this purpose you should use a supporting prop (1) which is to be positioned below the boom.
- Park the machine on level, solid ground.
- Apply the parking brake.
- Place wheel chocks in front of the wheels to prevent the machine from inadvertently rolling away.
- Lift the arm far enough to allow the supporting prop to be placed beneath the boom.
- Switch off the engine.
- With the engine switched off, lower the boom slowly until it rests on the supporting prop.
- Set the control lever to "NEUTRAL" and secure it with the safety lever (2) (locked).

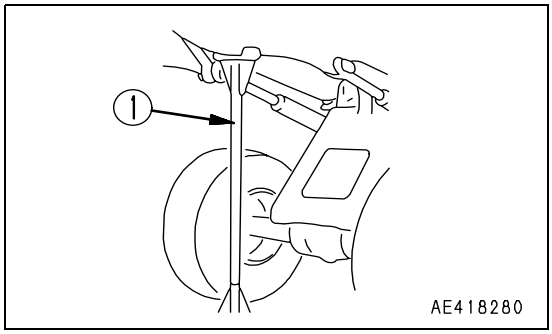

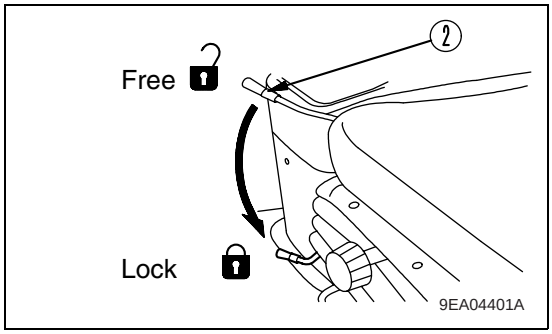

https://truckmanualshub.com/

Precautions when using hammer

When using a hammer, pins may fly out or metal particles may be scattered. This may lead to serious injury. Always do as follows.

- If hard metal parts such as pins, bucket teeth, cutting edges, or bearings are hit with a hammer, there is a hazard that pieces might be scattered and cause injury. Always wear safety goggles and gloves.
- When hitting pins or bucket teeth, there is a hazard that broken pieces might be sent flying and injure people in the surrounding area. Always check that there is no one in the surrounding area.
- There is a hazard that the pin hit with strong force may fly out and injure people in the surrounding area.

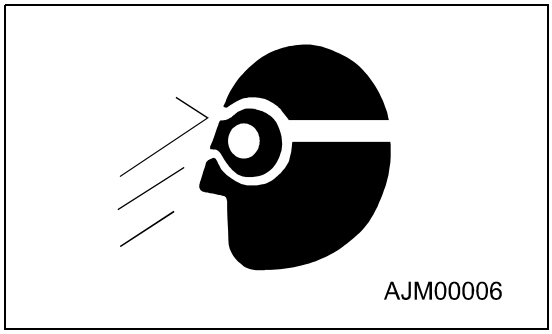

Repair welding

Welding operations must always be carried out by a qualified welder and in a place equipped with proper equipment. There is a hazard of gas, fire, or electrocution when carrying out welding, so never allow any unqualified personnel to carry out welding.

Removing battery terminal

When repairing the electrical system or when carrying out electrical welding, remove the negative (-) terminal of the battery to prevent the flow of current.

Precautions with high-pressure oil

The hydraulic system is always under internal pressure. When inspecting or replacing piping or hoses, always check that the pressure in the hydraulic circuit has been released. If the circuit is still under pressure, it will lead to serious injury, so always do as follows.

- When carrying out inspection and maintenance of the pressure, release the pressure before starting. For details, see “Maintenance with engine running on page 2-29“. Do not carry out inspection or replacement work with the circuit under pressure.
- If there is any leakage from the piping or hoses, the surrounding area will be wet, so check for cracks in the piping and hoses and for swelling in the hoses.
  When carry out inspection, wear safety glasses and leather gloves.
- There is a hazard that high-pressure oil leaking from small holes may penetrate your skin or cause blindness if it contacts your eyes directly. If you are hit by a jet of high-pressure oil and suffer injury to your skin or eyes, wash the place with clean water, and consult a doctor immediately for medical attention.

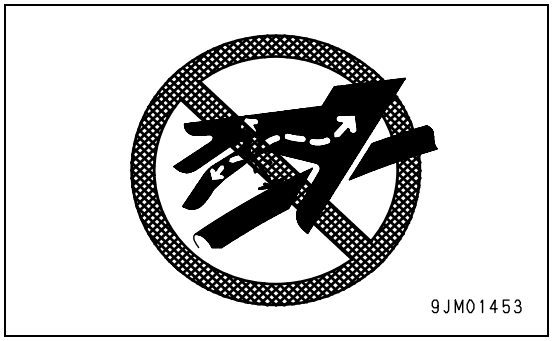

Precautions for high-pressure fuel

High pressure is generated inside the engine fuel piping when the engine is running. When carrying out inspection or maintenance of the fuel piping system, wait for at least 30 seconds after stopping the engine to let the internal pressure go down before starting inspection or maintenance.

https://truckmanualshub.com/

Handling high-pressure hoses

- If oil or fuel leaks from high-pressure hoses, it may cause fire or defective operation, which may lead to serious injury or property damage. If any loose bolts are found, stop work and tighten to the specified torque.
- If any damaged hoses are found, stop operations immediately and contact your Komatsu distributor.
- Replace all hoses every six years at the latest. The shelf life of the hose should not exceed 2 years.
- Hoses must be replaced as soon as the following damage is noticeable:
  - damage to the outer layer through to the intermediate layer,
  - brittleness in the outer layer,
  - distortions in pressurised or unpressurised state not conforming with the original shape of the installed hose,
  - leakages,
  - damage to the hose fittings or to the connection between fittings and hose,
  - storage damage.
- When replacing the hoses, always replace the O-rings, gaskets, and other such parts at the same time.
- See also "Periodic replacement of safety critical parts on page 4-15".

Waste materials

To prevent pollution, pay careful attention to the method of disposing of waste materials.

- Always put oil drained from your machine in containers. Never drain oil directly onto the ground or dump into the sewage system, rivers, the sea, or lakes.
- Obey appropriate laws and regulations when disposing of harmful objects such as oil, fuel, coolant, solvent, filters, and batteries.

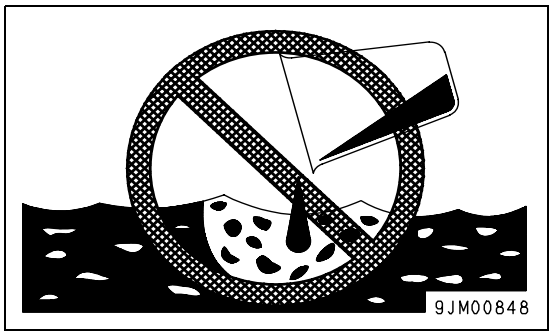

Maintenance of air conditioner

- If air conditioner refrigerant gets into your eyes, it may cause blindness; if it touches your skin, it may cause frostbite.
  Never touch refrigerant.

Compressed air

- When carrying out cleaning with compressed air, there is a hazard of serious injury caused by flying particles.
- When using compressed air to clean elements or the radiator, always wear safety goggles, dust mask, gloves, and other protective equipment.

Periodic replacement of safety critical parts

- In order for the machine to be operated safely for a long time, it is necessary to add oil and to carry out service and maintenance at periodic intervals. In order to further increase safety, components with a strong relationship to safety, such as hoses and seat belts, must be replaced at periodic intervals.
  Replacement of safety critical parts: see "Periodic replacement of safety critical parts on page 4-15".
- The material of these components naturally changes over time, and repeated use causes deterioration, wear, and fatigue. As a result, there is a hazard that these components may fail and cause serious injury or death. It is difficult to judge the remaining life of these components from external inspection or the feeling when operating, so always replace them at the specified interval.
- Replace or repair safety-critical parts if any defect is found, even when they have not reached the time specified interval.
- Replace all hoses every six years at the latest. The shelf life of the hose should not exceed 2 years.

https://truckmanualshub.com/

Precautions with tires

Handling tires

If tires or rims are handled mistakenly, there is danger that the tire may explode or be damaged, or that the rim may fly off and cause serious injury or death.
To maintain safety, always do as follows:

- Maintenance, disassembly, repair, and assembly of the tires and rims requires special equipment and special technology, so always ask your Komatsu distributor to carry out these operations.
- Always use the tires specified by Komatsu and maintain the specified inflation pressure.
  Suitable tire inflation pressure: see “Handling the tires on page 3-96“.
- When pumping up the tires, check that no other person is standing near the tire, and install an air chuck with a clip that can be secured to the air valve.
  To prevent the tire inflation pressure from becoming too high, measure the pressure from time to time with an air gauge while pumping up the tire.
- If the tire pressure goes down abnormally or the rim parts do not fit the tire, there is a problem with the tire or rim parts. Always contact your Komatsu distributor for repairs.
- If the rim parts are not fitted properly when the tire is being pumped up, there is danger that the rim parts may fly off, so set up a protective fence around the tire, and do not stand directly in front of the rim. Stand beside the tread when pumping up the tire.
- Do not adjust the tire inflation pressure immediately after traveling at high speed or carrying out operations under heavy load.
- Never carry out welding or light a fire near the tire.

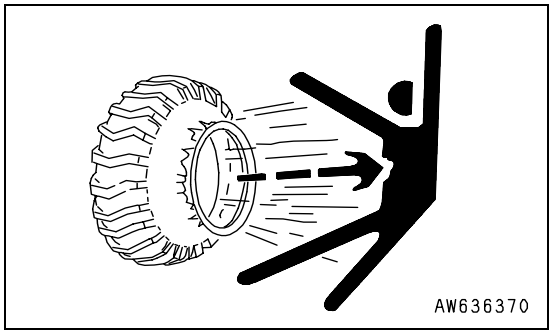

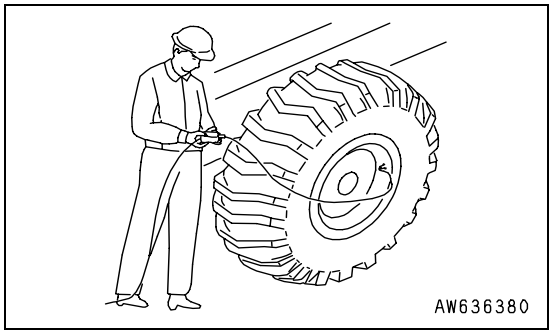

Precautions when storing tires

Tires for construction equipment are extremely heavy, so they may cause serious personal injury.

- As a basic rule, store the tires in a warehouse which unauthorized persons cannot enter.
  If the tires must be stored outside, always erect a fence and put up “No Entry“ signs.
- Stand the tire on level ground, and block it securely so that it cannot roll or fall over if any person should touch it.
  Do not lay the tire on its side. This will deform the tire and cause it to deteriorate.
- If the tire should fall over, do not attempt to stop it. Get out of the way quickly.

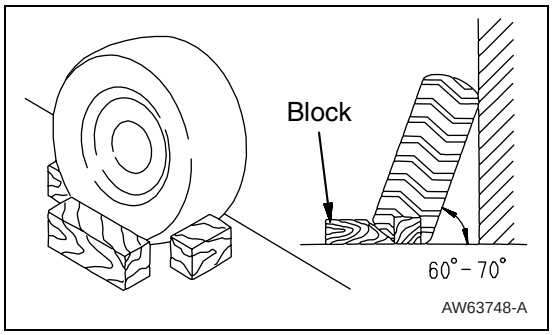

https://truckmanualshub.com/

https://truckmanualshub.com/

OPERATION

⚠ WARNING

Please read and make sure that you understand the safety volume before reading this section.

https://truckmanualshub.com/

https://truckmanualshub.com/

General view

General view of machine

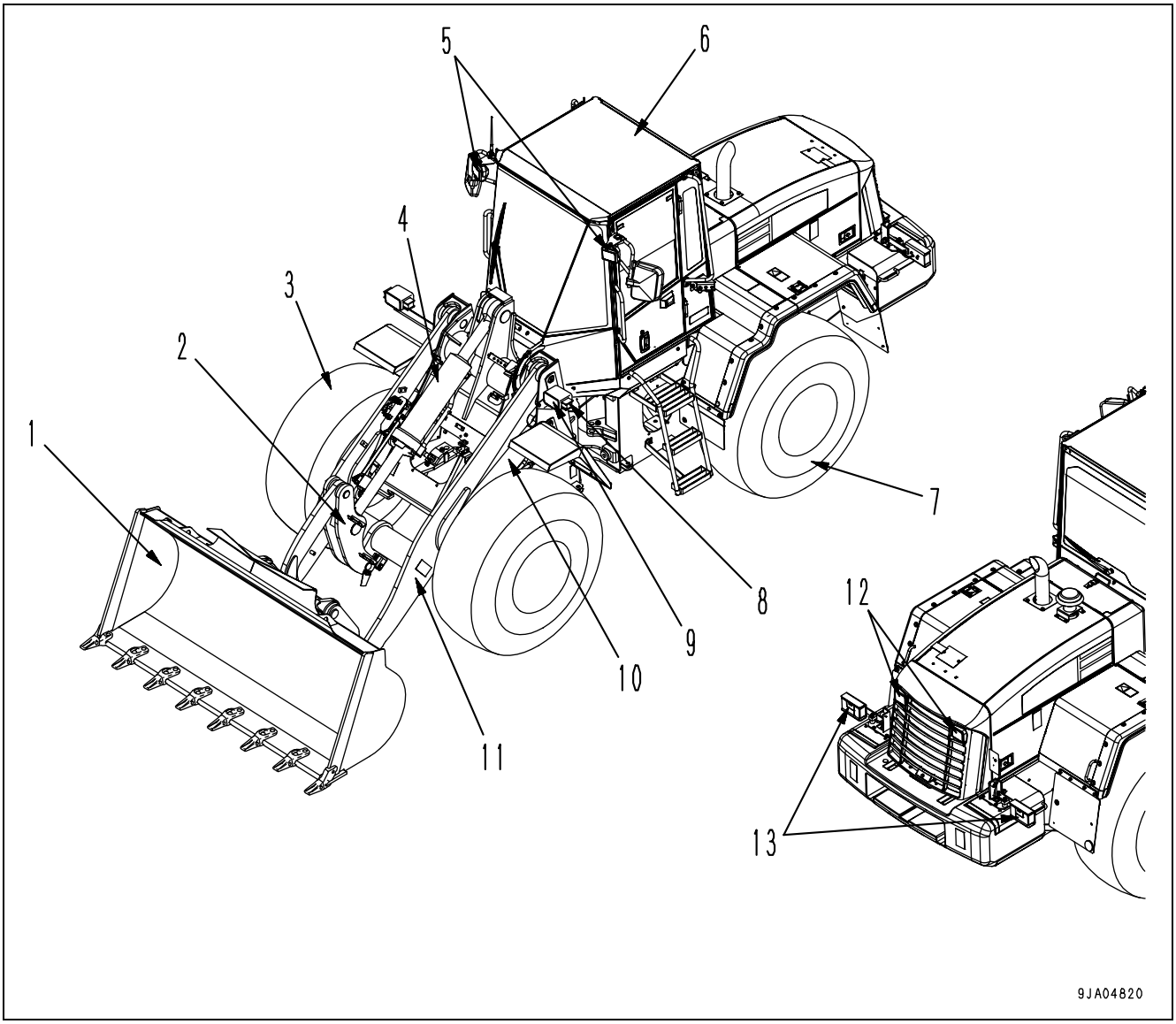

(1) Bucket	(8) Turn signal lamp
(2) Tilt lever	(9) Head lamp
(3) Front wheel	(10) Lift cylinder
(4) Bucket cylinder	(11) Lift arm
(5) Front working lamp	(12) Rear working lamp
(6) ROPS cab	(13) Rear combination lamp
(7) Rear wheel	

https://truckmanualshub.com/

General view of controls and gauges

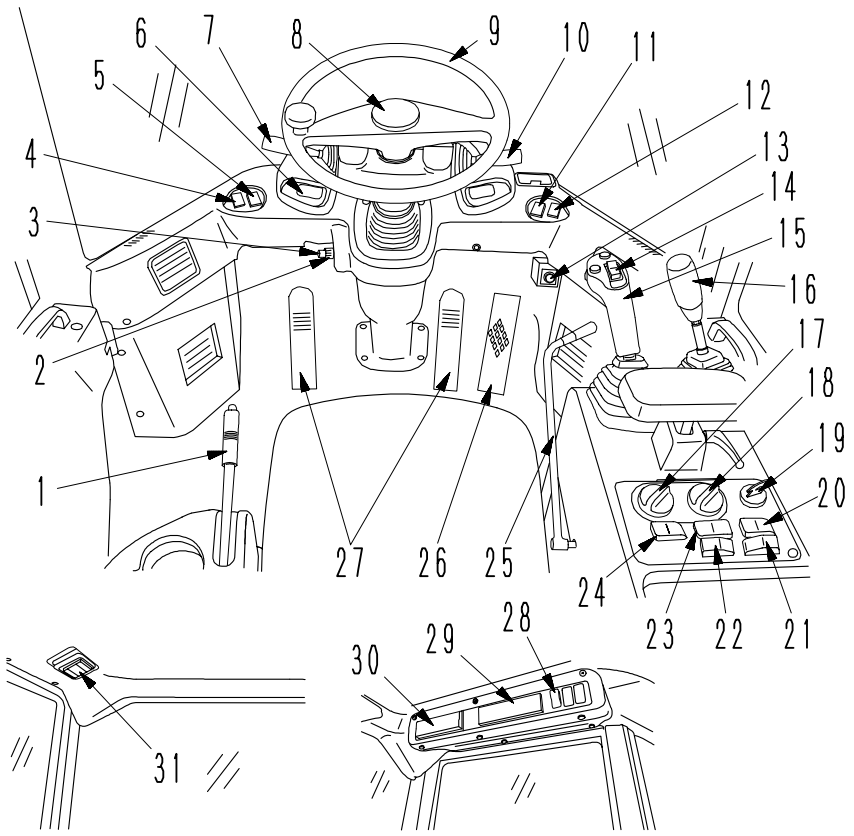

(1) Parking brake lever	(16) Auxiliary control lever
(2) Rear wiper switch	(17) Variable shift control switch
(3) Front wiper switch	(18) Speed range selector switch
(4) Front working lamp switch	(19) Start switch
(5) Rear working lamp switch	(20) Traction control switch
(6) Hazard lamp switch	(21) Attachment selection switch
(7) Directional lever	(22) Dump speed switch
(8) Horn switch	(23) E.C.S.S. switch
(9) Steering wheel	(24) Directional selector actuation switch
(10) Lamp switch	(25) Safety lock lever
(10) Turn signal lever	(26) Accelerator pedal
(10) Dimmer switch	(27) Brake pedal
(11) Monitor panel mode selector switch 1	(28) Rear heated wire glass switch
(12) Monitor panel mode selector switch 2	(29) Air conditioner panel
(13) Cigarette lighter	(30) Radio
(14) Directional selector switch	(31) Room lamp switch
(15) Work equipment control lever	

https://truckmanualshub.com/

Machine monitor

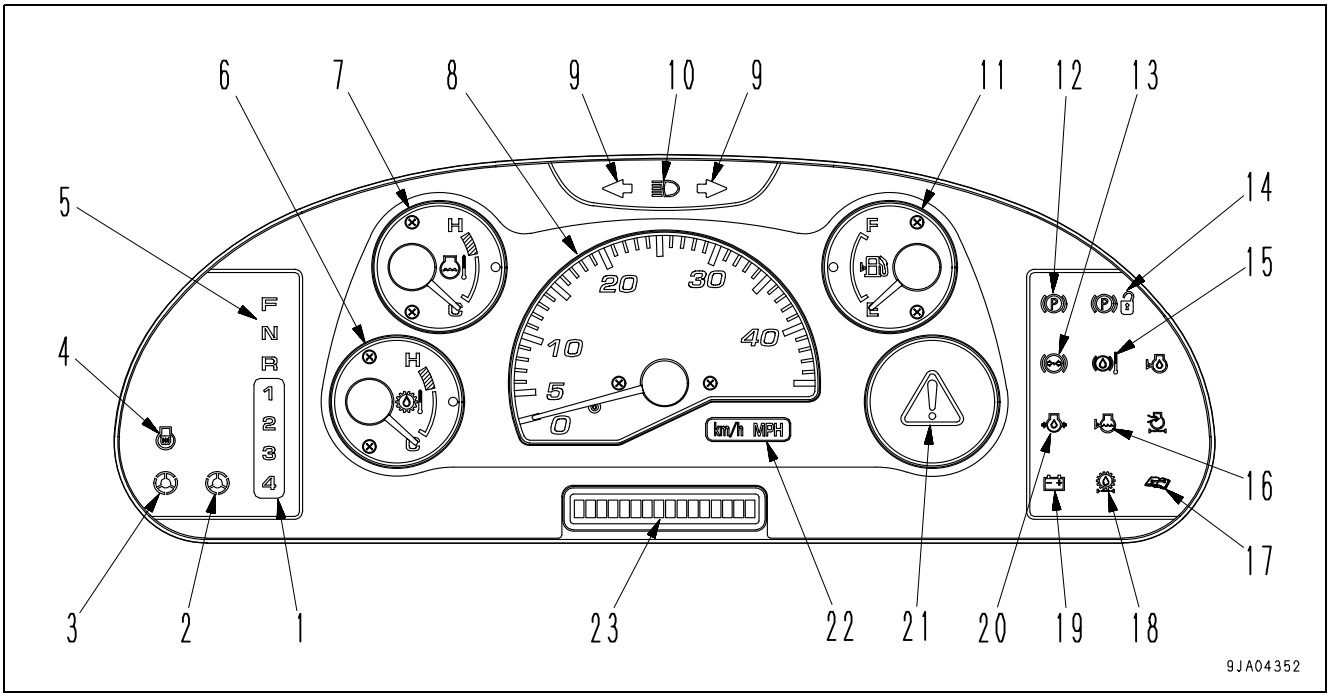

(1) Pilot lamp for speed range selector switch position	(13) Brake oil pressure caution lamp
(2) Steering oil pressure caution lamp	(14) Parking brake reminder caution lamp
(3) Emergency steering pilot lamp	(15) Axle oil temperature caution lamp
(4) Preheating pilot lamp	(16) Radiator coolant level caution lamp
(5) Directional lever position pilot lamp	(17) Maintenance caution lamp
(6) HST oil temperature gauge	(18) HST oil filter clogging caution lamp
(7) Engine coolant temperature gauge	(19) Battery charge circuit caution lamp
(8) Speedometer	(20) Engine oil pressure caution lamp
(9) Turn signal pilot lamp	(21) Central warning lamp
(10) Head lamp high beam pilot lamp	(22) Meter display pilot lamp
(11) Fuel gauge	(23) Character display
(12) Parking brake pilot lamp	

https://truckmanualshub.com/

Explanation of components

The following is an explanation of the devices needed for operating the machine.
To carry out suitable operations correctly and safely, it is important to understand fully the methods of operating the equipment and the meanings of the displays.

Machine monitor

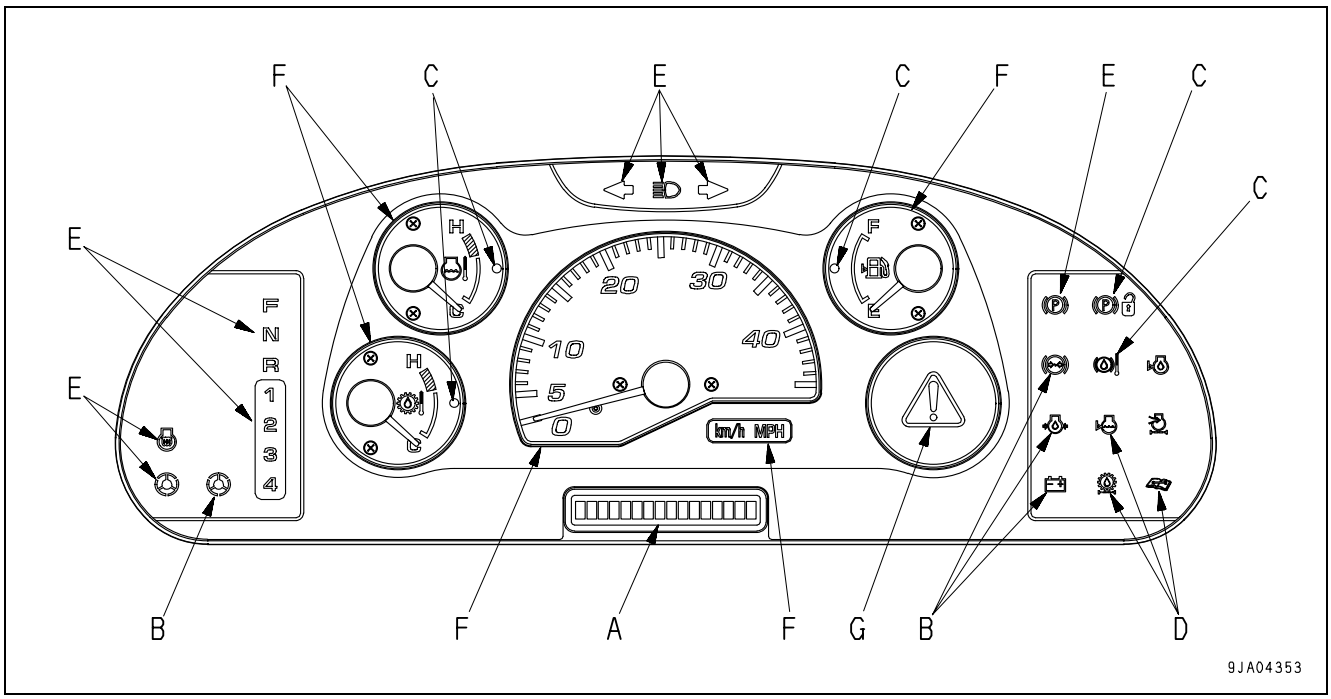

A: Character display	E: Pilot display
B: Emergency stop items	F: Meter display
C: Caution items	G: Central warning lamp
D: Inspection and maintenance items	

https://truckmanualshub.com/

Monitor system

Testing actuation of machine monitor system

NOTICE
When the starting switch is in the ON position before starting the engine, lamps (1) in the diagram on the right light up for approx. 3 seconds and the alarm buzzer sounds for approx. 3 seconds.
After 3 seconds all lamps except lamps (2) go out.
Lamps (2) go out after the engine starts.
If any lamps do not light up there is probably a failure or a disconnection, so please ask your Komatsu distributor to carry out inspection.

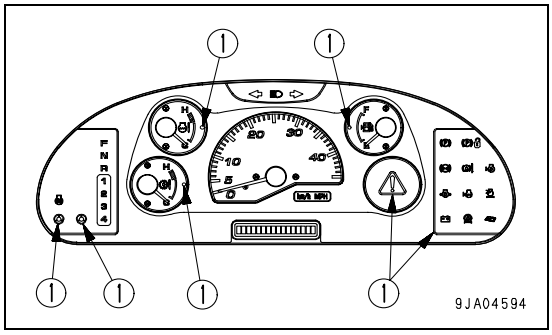

- When the starting switch is turned ON, if the directional lever is not at the neutral position, the central warning lamp lights up and the alarm buzzer sounds intermittently. If this happens, return the directional lever to the neutral position. The lamp will go out and the buzzer will stop.

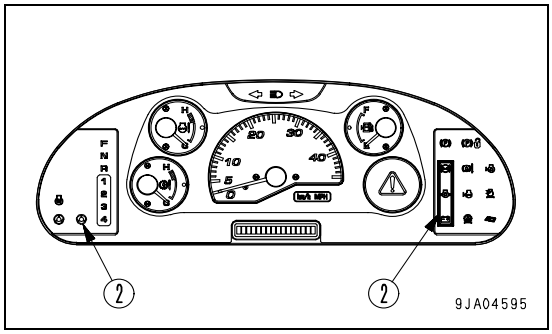

- Directional lever: Neutral position
  Directional selector actuation switch (3): ON position
  Directional selector switch (4): Forward or Reverse position

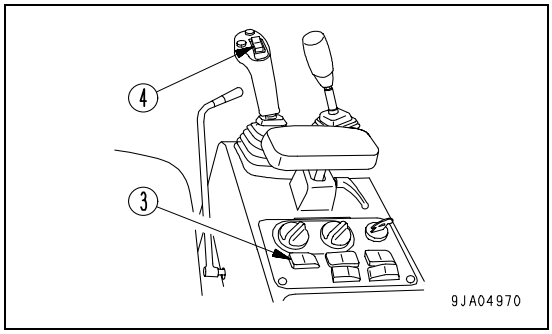

When the starting switch is turned to the ON position with the levers and switches in the following condition, all directional lever positional pilot lamps (5) will go out.
If directional selector switch (4) is then set to the N position, directional lever positional pilot lamps (5) display the normal condition “N“.

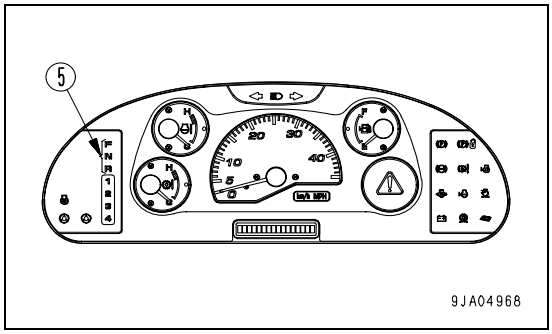

https://truckmanualshub.com/

Types of warning

If an abnormality occurs on the machine, or if any switch or lever is operated accidently, the monitor display and buzzer give a warning to inform the operator.
Following are the types of warning depending on the level of danger.

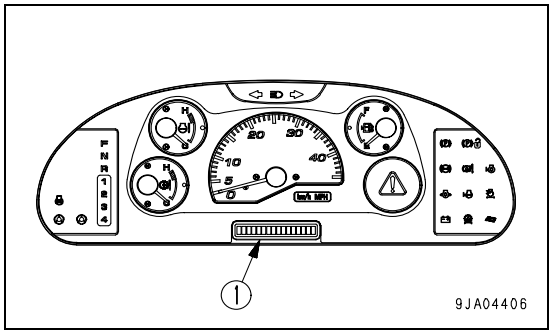

REMARK
For details of action codes “E03“ to “E00“, see “Action code display on page 3-11“.

Emergency stop

This warning is given if there is a serious failure that affects the normal operation of the machine or if the setting is incorrect.
The central warning lamp on the monitor and the caution lamp for the location of the abnormality light up, and at the same time, the alarm buzzer sounds and action code “E03“ is displayed on character display (1).

Caution

This warning is given if the cooling water or lubricating oil overheat.
The central warning lamp on the monitor and the individual caution lamps light up, and at the same time, the alarm buzzer sounds and action code “E02“ is displayed on character display (1).

Mlistaken operation

This warning is given if any switch or lever is operated mistakenly.
The central warning lamp on the monitor lights up and the alarm buzzer sounds at the same time. In addition, if the travel speed is too high, action code “E00“ is displayed on character display (1).

Inspection and maintenance

This warning is given if it is necessary to carry out inspection and maintenance of wear parts, or if it is necessary to check the oil or cooling water level.
The individual caution lamp on the monitor lights up, and at the same time, action code “E01“ is displayed on character display (1).
In the case of this warning, the central warning lamp does not light up and the alarm buzzer does not sound.

https://truckmanualshub.com/

Central warning lamp

This display portion (1) lights up if any emergency stop item, caution item, or mistaken operation of any switch or lever occurs. At the same time, the alarm buzzer sounds.
Check the content of the display and carry out the specified action for the item.

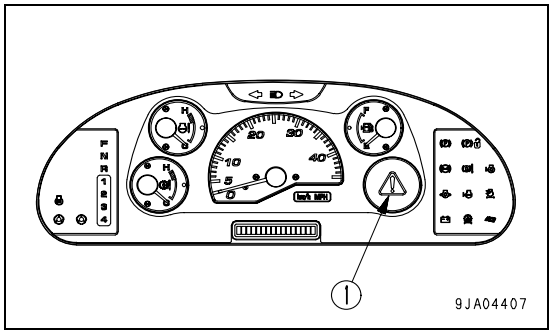

https://truckmanualshub.com/

Character display portion

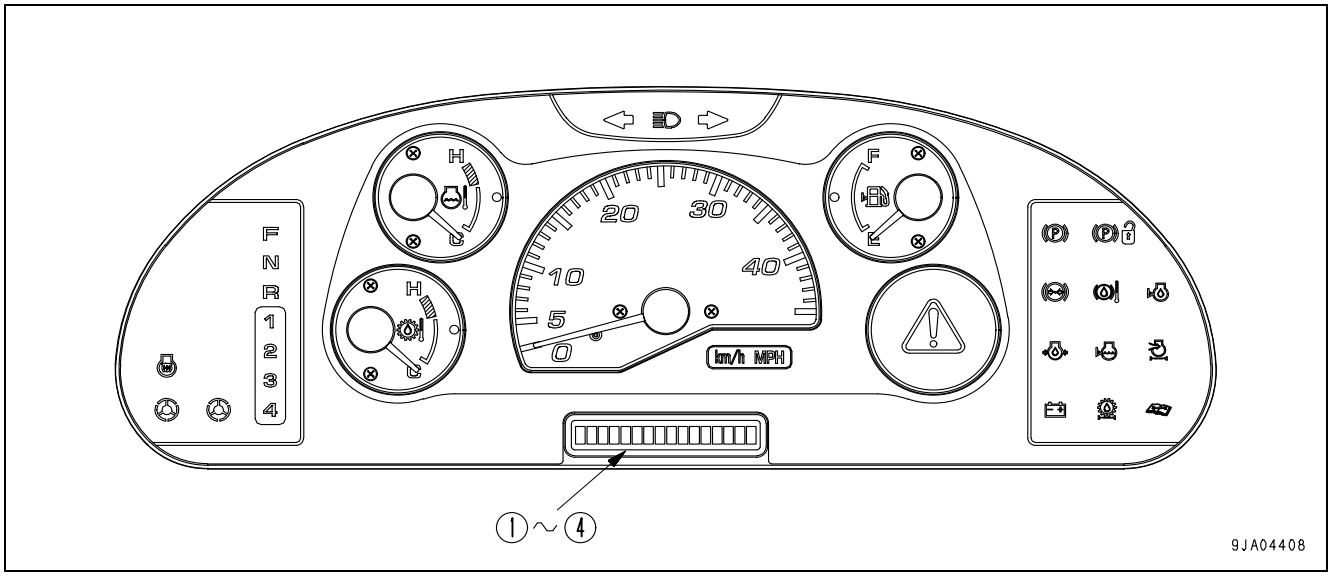

(1) Service meter	(4) Filter, oil replacement time display
(2) Action code display	
(3) Failure code display	

Normally, the service meter is displayed on the character display.
If the machine has failed, or if there has been excessive load on the machine, or if it is necessary to carry out inspection and maintenance, an action code is displayed to recommend suitable action.
When the time for replacing the filter or changing the oil is reached, after completion of the system check with the starting switch at the ON position, the maintenance monitor caution lamps flash or light up, and at the same time, the filter or oil to be replaced is displayed.

NOTICE
Information regarding the failure of the machine or maintenance is displayed on the character display when the starting switch is at the ON position, check the display to confirm that there is no abnormality before starting to travel.

Service meter

This meter (1) shows the total time that the machine has been operating.
While the engine is running, the service meter advances even if the machine is not moving.
The meter advances by 1 for every hour of operation, regardless of the engine speed.
Even if the starting switch is at the OFF position, the service meter will display as long as the top part (◇) of monitor panel mode selector switch 1 is being pressed.

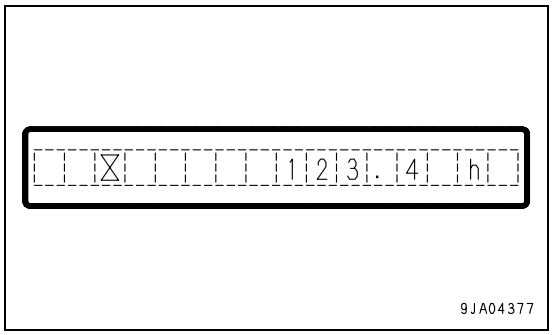

NOTICE
When the starting switch is at the OFF position, if the service meter is displayed even though the top (◇) of monitor panel mode selector switch 1 is not being pressed, there is probably a failure in the machine, so please contact your Komatsu distributor for inspection.

https://truckmanualshub.com/

Action code display

WARNING

If action code E03 is displayed, stop the machine immediately and check the failure code. For details, see “Failure code display on page 3-12“.
Inform your Komatsu distributor of the failure code and ask for repairs.

If there is a failure on the machine, or it is necessary to change the method of operation, or if inspection or maintenance must be carried out, action code E00, E01, E02, or E03 is displayed on the character display in display portion (3).
If different failures occur at the same time, the action code for the more serious problem is displayed.
The level of seriousness is as follows, starting with the most serious: E03, E02, E01, E00.
In the case of action codes E00, E02, and E03, the alarm buzzer sounds intermittently and the central warning lamp lights up.

If action codes E00, E01, E02, or E03 are displayed on the character display, stop operations, check the content of the display, and take the following action.

E03: When this code is displayed, stop the machine immediately, check the failure code, and contact your Komatsu distributor for repairs.

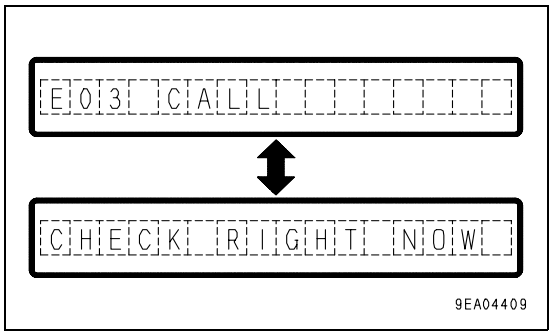

REMARK
“E03 CALL“ is displayed on the character display, and then “CHECK RIGHT NOW“ and “E03 CALL“ are displayed in turn for 3 seconds each.

E02: If overrun related information is displayed, reduce the engine speed and the speed of the machine while continuing operations.
If the overheat related display is given, stop the machine and run the engine under no load at a mid-range speed.
If an action code is still displayed after doing this, check the failure code and contact your Komatsu distributor for repairs.

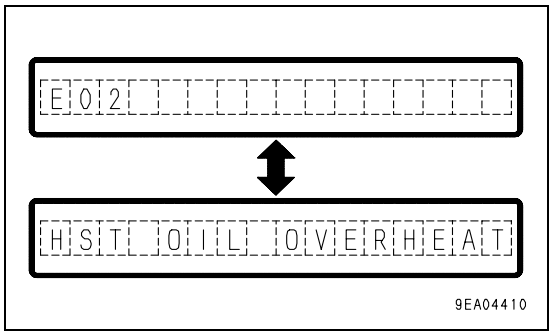

REMARK
“E02“ is displayed on the character display, and then the condition of the machine related to the overheating or overrun is displayed in turn with “E02“ for 3 seconds each.

E01: When a failure occurs in the mechanical system, such as a drop in the level of the engine cooling water, the maintenance location is displayed. If the maintenance caution lamp lights up at the same time, carry out inspection and maintenance of the item indicated after completion of the day's work or when changing shifts. If “MAINTENANCE“ is displayed together with E01, check the failure code and ask for repairs to be carried out.

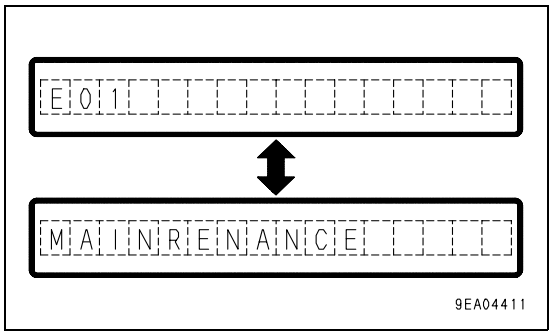

REMARK
“E01“ is displayed on the character display, and then “MAINTENANCE“ or the part of the machine requiring inspection, filling of fluid, or replacement is displayed on the bottom line.

https://truckmanualshub.com/

E00: If travel speed overrun is displayed, ease the accelerator pedal back to reduce speed.

REMARK
“E00“ is displayed on the character display, and then “OVERRUN PREVENTION“ and “E00“ are displayed in turn for 3 seconds each.

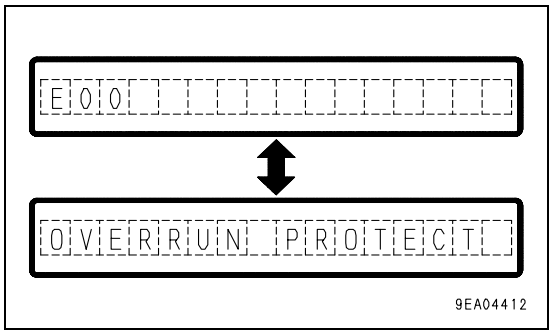

Failure code display

If an action code is displayed on the character display, check the failure code according to the failure code display method given below.
When contacting your Komatsu distributor to request repairs, please inform your distributor of the failure code.

Method of displaying failure code

1. If an action code is displayed on the character display of display portion (4), press the top (>) of monitor panel mode selector switch 2 (A).
   The action code will change to the failure code.
   - The failure code is displayed with the first 6 digits on the left side of the character display.
   - The code displayed after the space on the right side of the failure code indicates the controller that detected the failure code.
   - The failure code and the component causing the failure are displayed on the character display in turn for 3 seconds each.

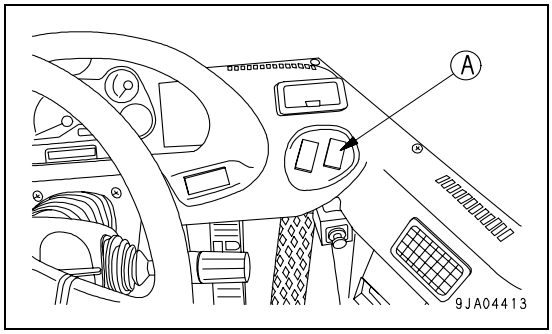

Top right code	Controller detecting failure code
MON	Machine monitor
HST	HST controller

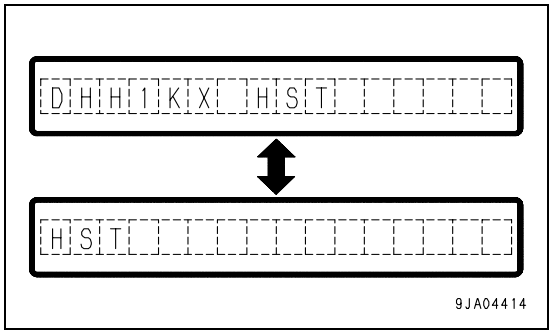

2. Press the top (>) of monitor panel mode selector switch 2 (A) again.
   If the condition is normal, the service meter is displayed for several seconds, then the display returns to the action code.
   If more than one failure has occurred at the same time, the next failure code is displayed.

Filter, oil replacement time display

After completion of the system check and when the starting switch is in the ON position, if any filter or oil item is approaching the replacement time, this display (5) shows the item for approx. 30 seconds. When this happens, the maintenance caution lamp also flashes or lights up.
After replacing the filter or changing the oil, reset the time for replacement. For details, see “Reset method for filter, oil replacement time on page 3-27“.

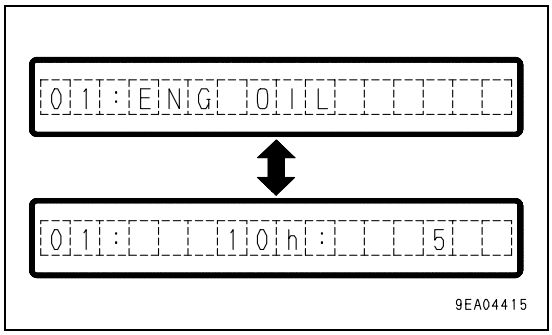

https://truckmanualshub.com/

REMARK

- **The ID number and item name of the item needing replacement are displayed on the character display, and then the remaining time to replacement and the number of times of replacement are displayed in turn for 3 seconds each.**
- **If the replacement time has already passed, a minus (-) sign appears before the time.**
- **After the display has been given for 30 seconds, it does not appear again until the starting switch is turned to the ON position.**
- **The message in the illustration above is not shown on the character display if an action code is being displayed.**
- **If there are two or more items to be displayed, they are displayed repeatedly in turn. If there are more than 10 items, all the items are displayed once each, then the display returns to the normal display.**
- **The display appears when there is 30 hours remaining until the filter or oil replacement time. If the replacement time has passed, a minus (-) sign appears before the time for the first 999 hours. When more than 999 hours have passed, the display is no longer given.**
- **The maintenance caution lamp flashes as the replacement time approaches, and after the replacement time has passed, it lights up.**

Items for display of filter, oil replacement time

Item	Replacement interval (H)	Character display	ID number
Engine oil	500	ENG OIL	01
Engine oil filter	500	ENG FILT	02
Fuel filter	500	FUEL FILT	03
Transfer oil	1000	TRANSF OIL	25
HST oil filter	1000	HST FILT	26
Hydraulic filter	2000	HYD FILT	04
Hydraulic oil	2000	HYD OIL	10
Axle oil	2000	AXLE OIL	15

REMARK

See the section below for details of the procedure for replacing the filter and oil:

- **Engine oil:**
  See "Change oil in engine oil pan, replace engine oil filter cartridge on page 4-47".
- **Engine oil filter:**
  See "Change oil in engine oil pan, replace engine oil filter cartridge on page 4-47".
- **Fuel filter: See "Replace fuel filter cartridge on page 4-48".**
- **Transfer oil: See "Change oil in transfer case on page 4-50".**
- **HST oil filter: See "Replace HST oil filter element on page 4-52".**
- **Hydraulic filter:**
  See "Change oil in hydraulic tank, replace hydraulic filter element on page 4-54".
- **Hydraulic oil:**
  See "Change oil in hydraulic tank, replace hydraulic filter element on page 4-54".
- **Axle oil: See "Change axle oil on page 4-56".**

https://truckmanualshub.com/

Emergency stop item

CAUTION

If these lamps light up and the buzzer sounds, stop operations immediately and carry out inspection and maintenance of the applicable location.

If any abnormality is found in the emergency stop items, the alarm buzzer will sound intermittently, and the lamp for the location of the abnormality and the central warning lamp will light up.
At the same time, “E03 CALL“ and “CHECK RIGHT NOW“ are displayed on the character display in turn, so stop the machine immediately in a safe place, then stop the engine and carry out inspection.

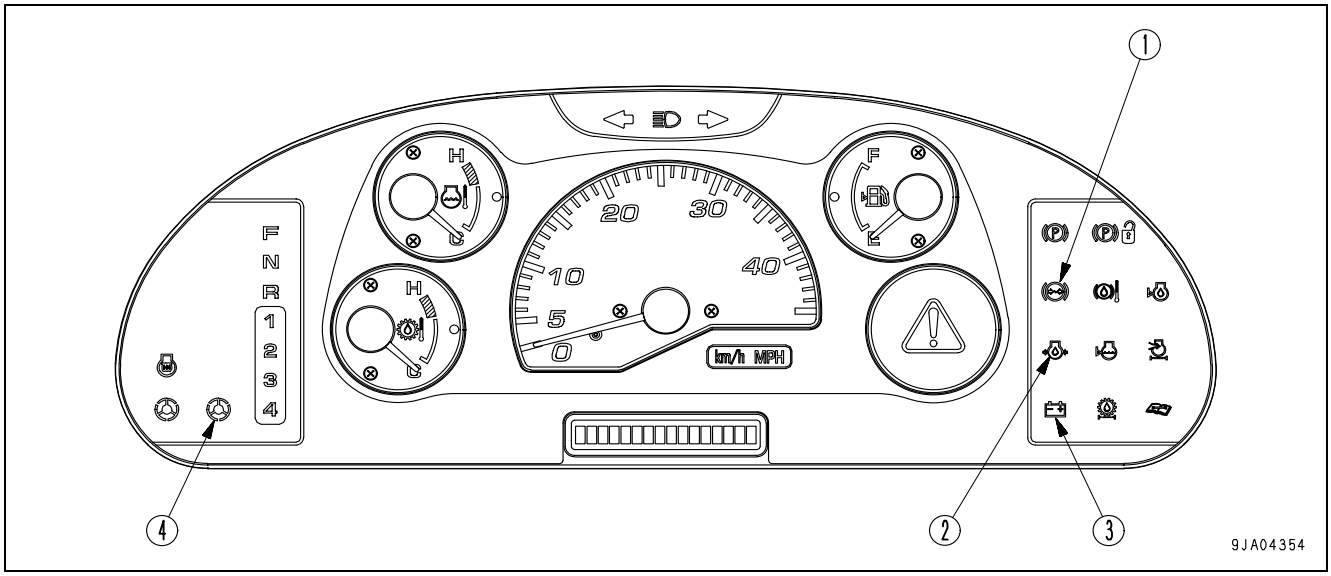

(1) Brake oil pressure caution lamp	(3) Battery charge circuit caution lamp
(2) Engine oil pressure caution lamp	(4) Steering oil pressure caution lamp

Brake oil pressure caution lamp

This lamp (1) lights up when the brake oil pressure goes below the specified value.

During checks before starting (starting switch at the ON position, engine stopped) the lamps are lighted up, and when the engine is started, the lamps go out.

During operation (engine running)
If the brake oil pressure goes down during operation, the brake oil pressure caution lamp and central warning lamp light up and the alarm buzzer sounds intermittently.
At the same time, “E03 CALL“ and “CHECK RIGHT NOW“ are displayed on the character display in turn, so stop the machine immediately in a safe place, then stop the engine and carry out inspection.
If the brake oil pressure caution lamp lights up, the footbrake may not work, so keep the parking brake applied to prevent the machine from moving.
Keep the parking brake applied to prevent the machine from moving until the brake pressure becomes normal and the brake oil pressure caution lamp goes out.

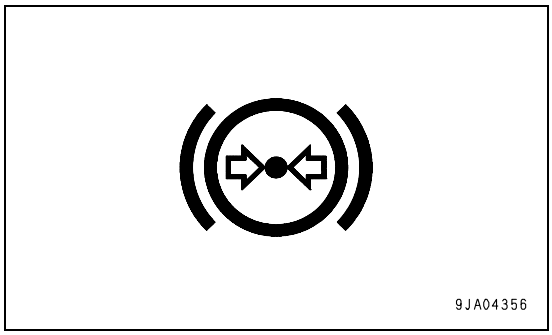

https://truckmanualshub.com/

Engine oil pressure caution lamp

This lamp (2) lights up to warn the operator that the engine lubricating oil pressure has dropped.

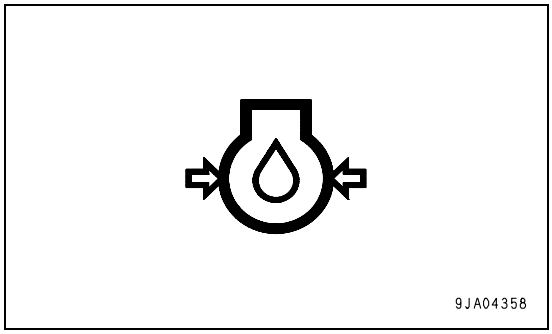

During checks before starting (starting switch at the ON position, engine stopped) the lamps are lighted up, and when the engine is started, the lamps go out.

During operation (engine running)
If the engine lubricating oil pressure goes down during operation, the engine lubricating oil pressure caution lamp and central warning lamp light up and the alarm buzzer sounds intermittently.
At the same time, “E03 CALL“ and “CHECK RIGHT NOW“ are displayed on the character display in turn, so stop the machine immediately in a safe place, then stop the engine and carry out inspection.

Battery charge circuit caution lamp

This lamp (3) lights up when the engine is running to warn the operator that an abnormality has occurrred in the charging circuit.

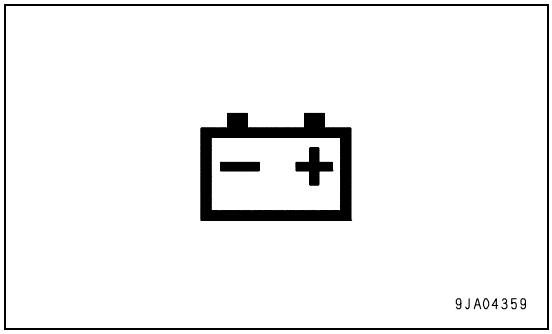

During checks before starting (starting switch at the ON position, engine stopped) the lamps are lighted up, and when the engine is started, the lamps go out.

During operation (engine running)
If an abnormality occurrs in the charging circuit during operation, the battery charge circuit caution lamp and central warning lamp light up and the alarm buzzer sounds intermittently.
At the same time, “E03 CALL“ and “CHECK RIGHT NOW“ are displayed on the character display in turn, so stop the machine immediately in a safe place, then stop the engine and carry out inspection.

Steering oil pressure caution lamp

(Red)
This lamp (4) lights up to warn the operator that the steering oil pressure has dropped.

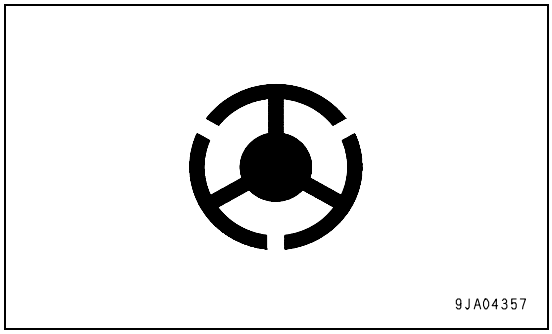

During checks before starting (starting switch at the ON position, engine stopped) the lamps are lighted up, and when the engine is started, the lamps go out.

During operation (engine running)
If the steering oil pressure goes down during operation, the steering oil pressure caution lamp and central warning lamp light up and the alarm buzzer sounds intermittently.
At the same time, “E03 CALL“ and “CHECK RIGHT NOW“ are displayed on the character display in turn, so stop the machine immediately in a safe place, then stop the engine and carry out inspection.

https://truckmanualshub.com/

Caution items

CAUTION

If these lamps light up, stop operations quickly and carry out the following action.

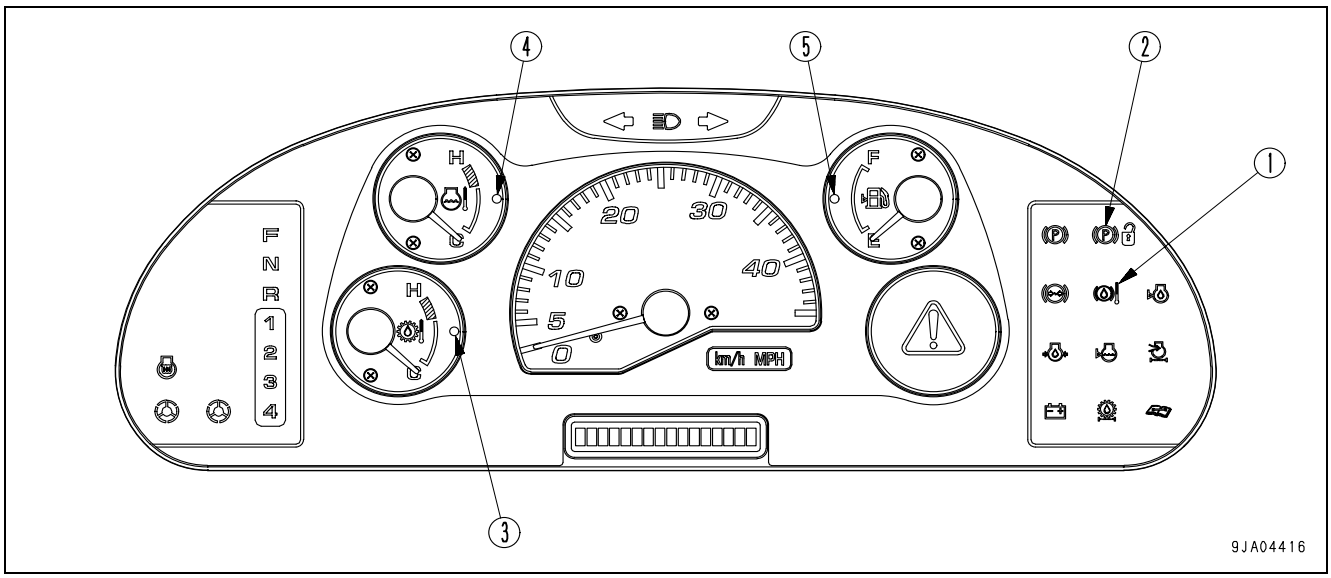

(1) Axle oil temperature caution lamp	(4) Hydraulic oil temperature caution lamp
(2) Torque converter oil temperature caution lamp	(5) Fuel level caution lamp
(3) Engine cooling water temperature caution lamp	

AXLE OIL TEMPERATURE CAUTION LAMP

This lamp (1) lights up to warn the operator that the brake oil temperature has risen.

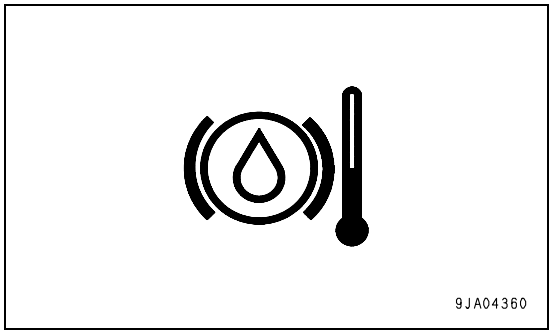

During checks before starting (when the starting switch is turned to the ON position but the engine is not started), this monitor does not light up.

During operation (engine running)
In continuous heavy-duty operations or when traveling long distances downhill where the brake is used frequently, the axle oil temperature becomes high, so the axle oil temperature caution lamp and central warning lamp light up and the alarm buzzer sounds intermittently.
At the same time, “E02“ and “BRAKE OVERHEAT“ are displayed on the character display in turn, so take the following action:

1. Release the accelerator pedal and move the speed range selector switch down one range to reduce the travel speed.
2. Avoid using the brake.
   Do not keep the brake pedal depressed continuously; use the brake only intermittently.
   If use of the brake is reduced for a short time in the way recommended above, the axle oil temperature will go down and the caution lamp will go out.

https://truckmanualshub.com/

Parking brake reminder caution lamp

This lamp (2) lights up when engine is stopped but the parking brake is not applied.
At the same time, the central warning lamp lights up and the alarm buzzer sounds intermittently.
When the parking brake is applied, the lamp goes out and the buzzer stops.

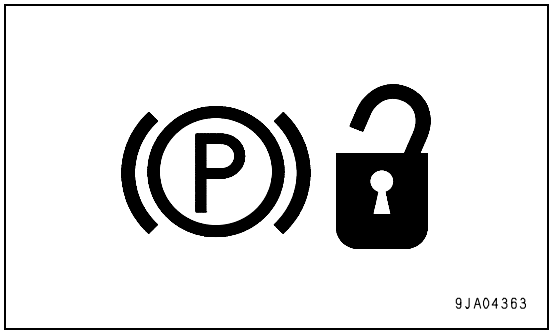

HST oil temperature caution lamp

This lamp (3) lights up to warn the operator that the HST oil temperature has risen.

During checks before starting (when the starting switch is turned to the ON position but the engine is not started), this monitor does not light up.

During operation (engine running)
When the HST oil temperature goes up, the HST oil temperature caution lamp and central warning lamp light up, and the alarm buzzer sounds intermittently.
At the same time, “E02“ and “HST OVERHEAT“ are displayed on the character display in turn, so stop the machine and run the engine at a midrange speed under no load until the lamp goes out.

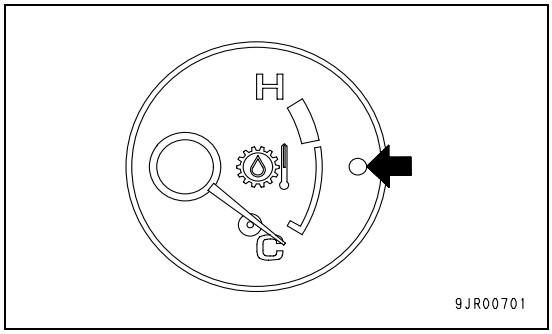

Engine cooling water temperature caution lamp

This lamp (4) lights up to warn the operator that the engine cooling water temperature has risen.

During checks before starting (when the starting switch is turned to the ON position but the engine is not started), this monitor does not light up.

During operation (engine running)
If the engine cooling water temperature rises, the engine cooling water temperature caution lamp only will light up.
If the water temperature rises further, the central warning lamp will light up and the alarm buzzer will sound intermittently.
At the same time, “E02“ and “ENGINE OVERHEAT“ are displayed on the character display in turn, so stop the machine and run the engine at a midrange speed under no load until the lamp goes out.

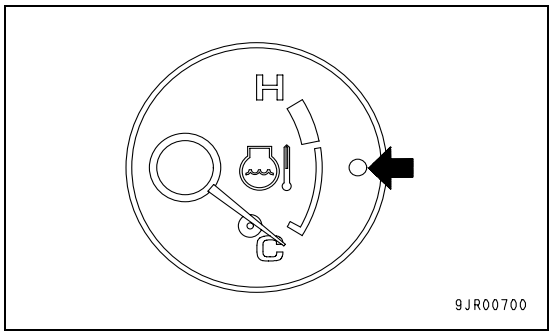

https://truckmanualshub.com/

Fuel level caution lamp

This monitor (5) lights up if the amount of fuel remaining in the fuel tank goes below 26 liters (6.87 US gal).
If it lights up, check and add fuel as soon as possible.

REMARK
Even if the caution lamp lights up, action code “E02“ is not displayed on the character display.

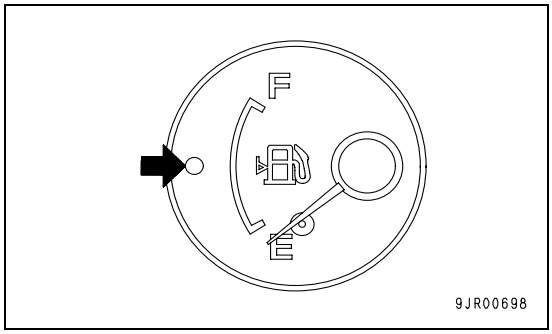

Warning/limit functions for travel speed

When the travel speed goes above 40.0 km/h (24.9 MPH), the central warning lamp lights up and the alarm buzzer sounds.
At the same time, “E00“ is displayed on the character display, and then “OVERRUN PREVENTION“ and “E00“ are displayed in turn for 3 seconds each.
If the alarm buzzer sounds, ease the accelerator pedal back and reduce speed.

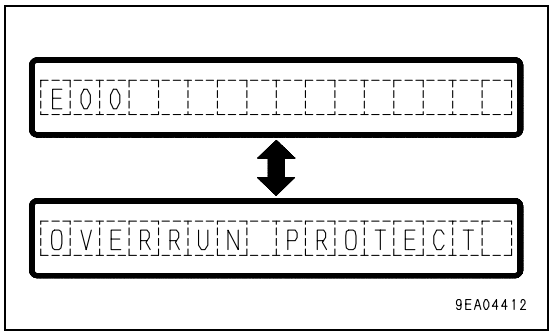

Travel speed limit function

The travel speed is automatically controlled so that it does not go above approx. 42 km/h (26.1 MPH).

https://truckmanualshub.com/

Inspection and maintenance item

CAUTION

If these lamps light up, stop operations quickly and carry out the following action.

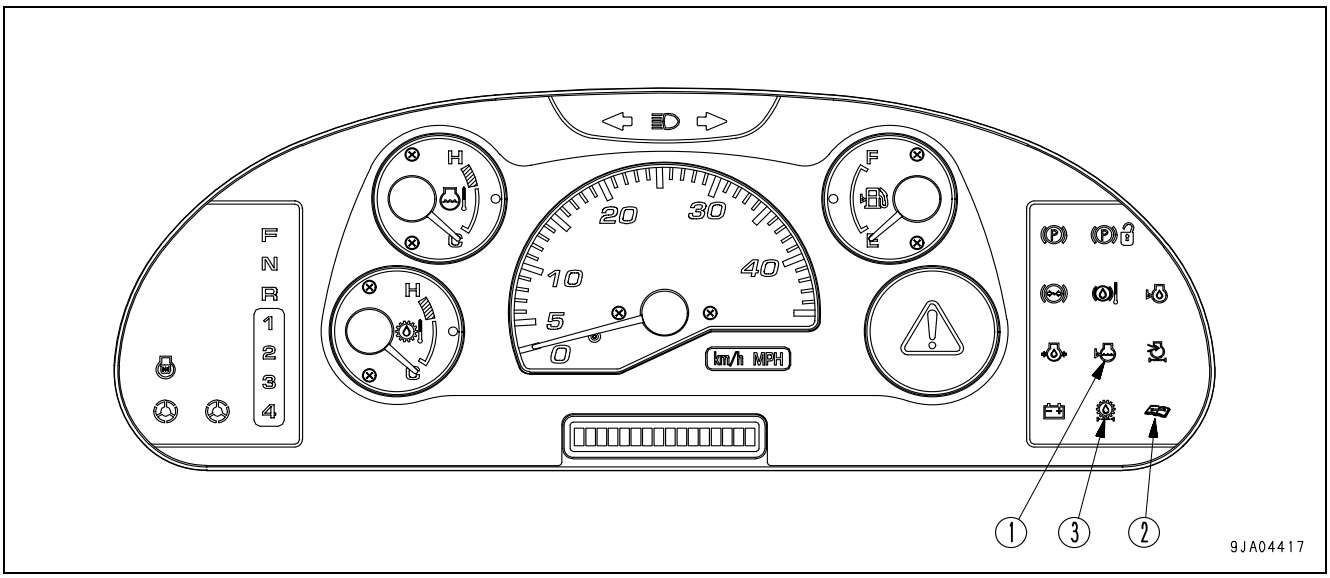

(1) Radiator water level caution lamp	(3) HST oil filter clogging caution lamp
(2) Maintenance caution lamp	

Radiator coolant level caution lamp

This lamp (1) lights up to warn the operator that the coolant level in the radiator has gone down.

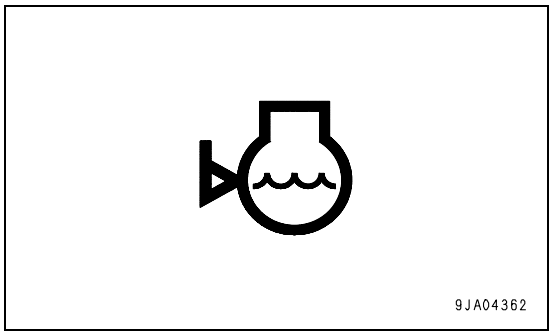

During checks before starting (when the starting switch is turned to the ON position but the engine is not started), this monitor lights up if the coolant level in the radiator is low.
At the same time, “E01“ and “COOLANT LOW“ are displayed on the character display in turn, so check the coolant level in the radiator sub-tank, and add coolant. Use a suitable climbing aid (for example a ladder) to climb up the back of the machine and unscrew the radiator cap.

During operation (engine running)
If the water level in the radiator becomes too low, the radiator coolant level caution lamp will light up.
At the same time, “E01“ and “COOLANT LOW“ are displayed on the character display in turn, so stop the engine, check the coolant level in the radiator sub-tank, and add coolant.

https://truckmanualshub.com/

Maintenance caution lamp

CAUTION

If the caution lamp lights up, repair the problem as soon as possible. If this is left as it is, it will lead to failure.

When the time for filter and oil change is reached, this monitor (2) flashes or lights up for approx. 30 seconds after completion of the system check when the starting switch is at the ON position.

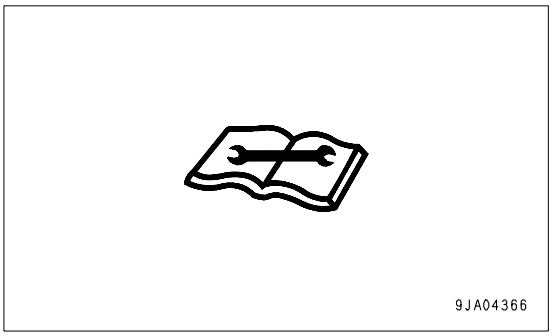

REMARK
The maintenance caution lamp flashes when there is less than 30 hours to the replacement time, and after the replacement time has passed, it stay on.

For details of the items covered by filter and oil replacement, see “Filter, oil replacement time display on page 3-12“.
After replacing the filter or changing the oil, reset time for the replacement. For details, see “Reset method for filter, oil replacement time on page 3-27“.

HST oil filter clogging caution lamp

When the engine is running, this lamp (3) lights up if the HST oil filter is clogged.

During checks before starting (when the starting switch is turned to the ON position but the engine is not started), this monitor does not light up.

During operation (engine running)
This lights up if the HST oil filter is clogged.
At the same time, “E01“ and “HST OIL FILTER“ are displayed on the character display in turn, so replace the oil filter.

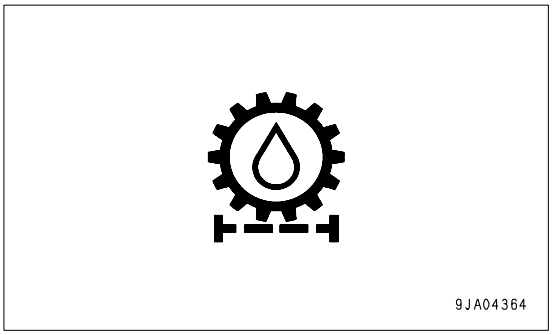

REMARK
The lamp may light up in cold temperatures, but it should go out when the HST oil temperature gauge indicator enters the white range.

https://truckmanualshub.com/

Pilot display portion

When the starting switch is ON, the pilot display lights up when the display items are functioning.

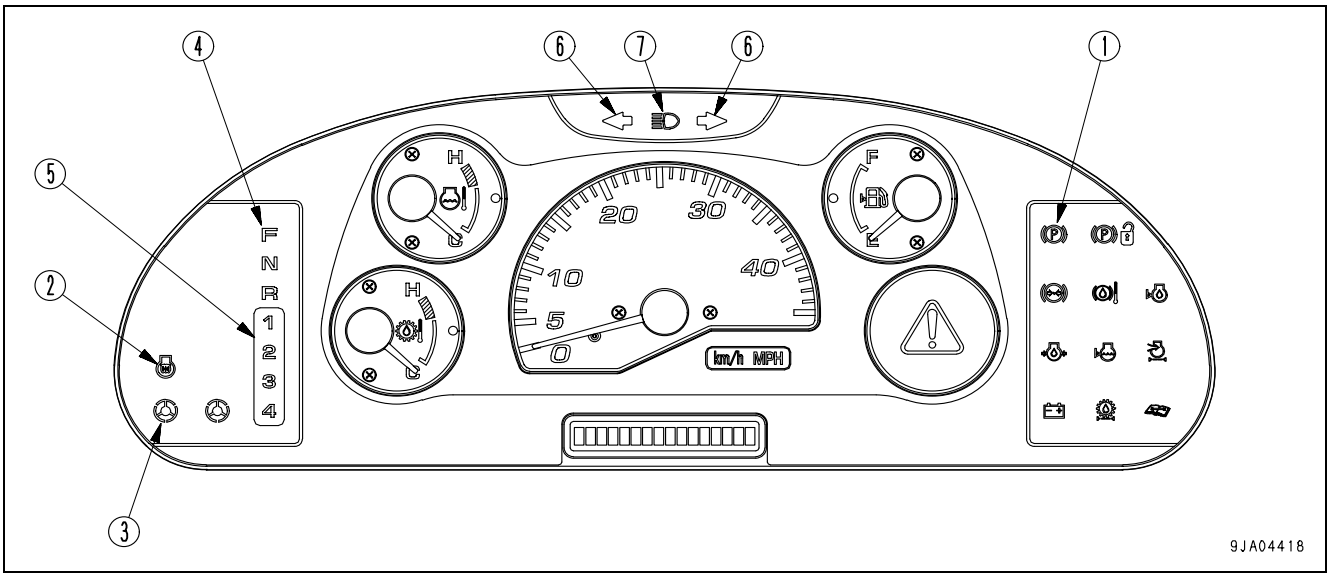

(1) Parking brake pilot lamp	(5) Pilot lamp for speed range selector switch position
(2) Preheating pilot lamp	(6) Turn signal pilot lamp
(3) Emergency steering pilot lamp	(7) Head lamp high beam pilot lamp
(4) Directional lever position pilot lamp	

Parking brake pilot lamp

This lamp (1) lights up when the parking brake is applied.

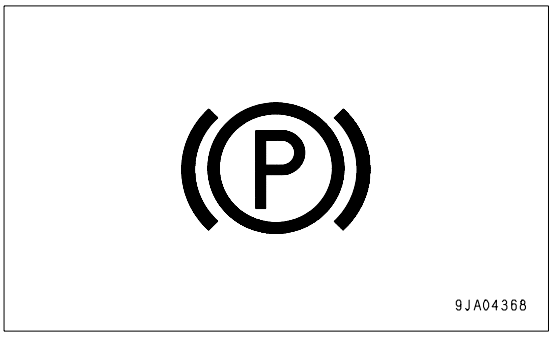

Preheating pilot lamp

This lamp (2) lights up when the engine preheating electric heater is actuated.
In cold weather, when the starting switch is turned to the ON position, this lamp lights up, and when the preheating is completed, it goes out.
The preheating time differs according to the engine water temperature.

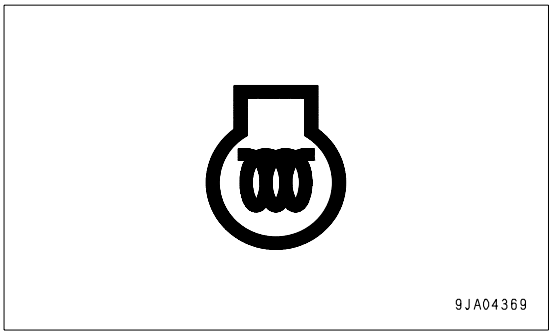

https://truckmanualshub.com/

Emergency steering pilot lamp

(Green)

If this lamp (3) lights up when the engine is running or when the machine is operating, it indicates that the condition is normal.

If it does not light up, an abnormality has occurred in the emergency steering circuit.
Move the machine immediately to a safe place, stop the engine, and check the condition.

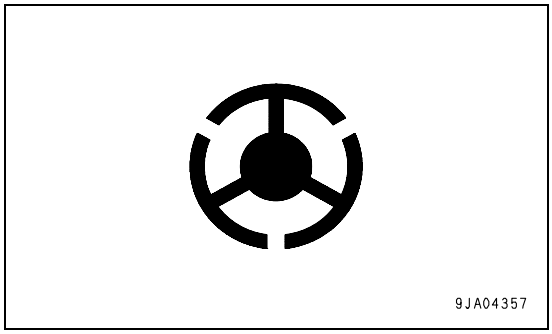

Directional lever position pilot lamp

This lamp (4) indicates the position of the directional lever.

F lights up: FORWARD
N lights up: NEUTRAL
R lights up: REVERSE

REMARK
In the following conditions, it indicates the position of the directional selector switch.
Directional selector actuation switch (3): ON position
Directional lever: Neutral position

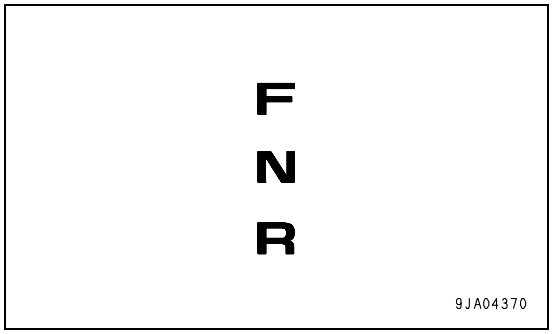

Pilot lamp for speed range selector switch position

This lamp (5) indicates the position of the speed range selector switch.

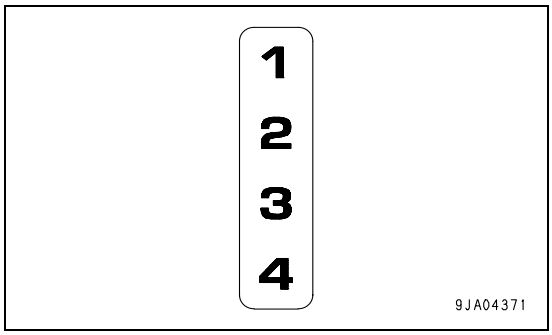

Turn signal pilot lamp

When the turn signal lamp flashes, this lamp (6) also flashes.

REMARK
If there is a disconnection in the turn signal lamp, the flashing interval becomes shorter.

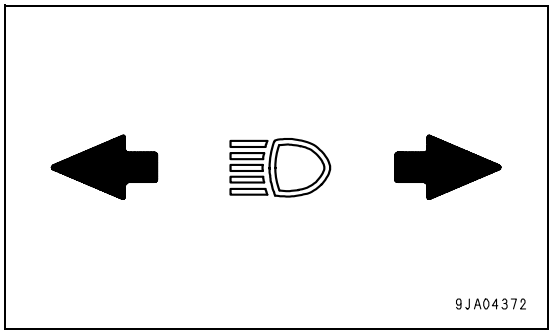

https://truckmanualshub.com/

Head lamp high beam pilot lamp

This lamp (7) lights up when the head lamp is at high beam.

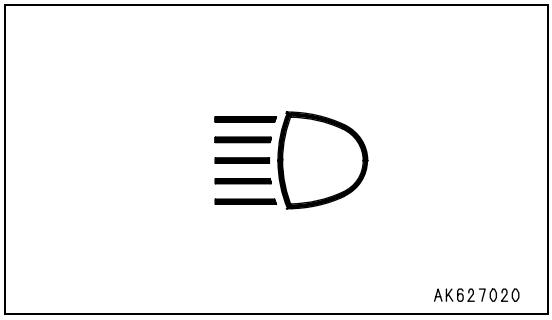

https://truckmanualshub.com/

Meter display portion

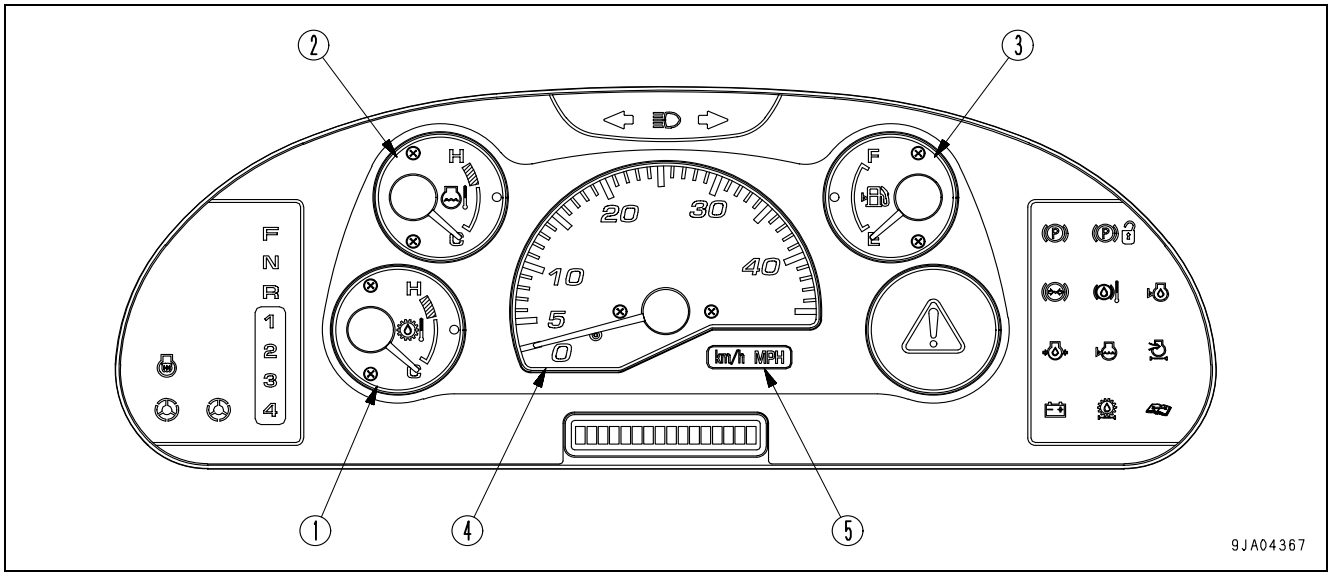

(1) HST oil temperature gauge	(4) Speedometer
(2) Engine coolant temperature gauge	(5) Meter display pilot lamp
(3) Fuel gauge	

HST oil temperature gauge

This meter (1) indicates the HST oil temperature.
During normal operations, the indicator should be in the white range (A).
If the indicator enters red range (B) during operations, caution lamp (C) inside the HST oil temperature gauge lights up. At the same time, the central warning lamp lights up and the alarm buzzer sounds. In addition, “E02“ and “HST OVERHEAT“ are displayed on the character display in turn.
Run the engine at a midrange speed under no load and wait for the indicator to return to the white range (A).

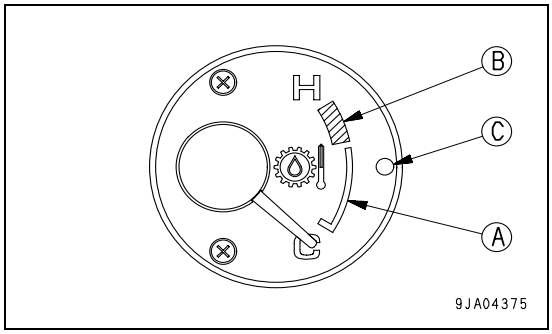

Engine coolant temperature gauge

This meter (1) indicates the engine coolant temperature.
During normal operations, the indicator should be in the white range (A).
If the indicator enters red range (B) during operations, caution lamp (C) inside the engine coolant temperature gauge lights up. At the same time, the central warning lamp lights up and the alarm buzzer sounds. In addition, “E02“ and “ENGINE OVERHEAT“ are displayed on the character display in turn.
Run the engine at a midrange speed under no load and wait for the indicator to return to the white range (A).

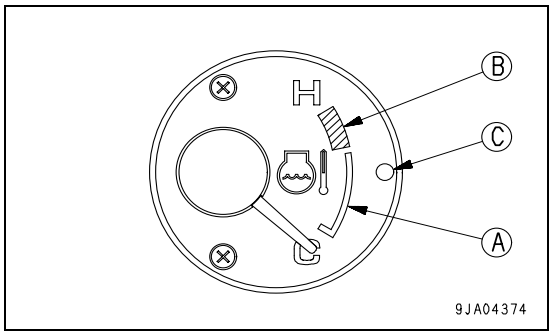

https://truckmanualshub.com/

Fuel gauge

This meter (3) indicates the amount of fuel remaining in the fuel tank.
If the indicator is at the F position, it indicates that the tank is full.
If the indicator is at the E position, it indicates that there is little fuel remaining. When the amount of remaining fuel goes below 26 liters (6.87 US gal), caution lamp (A) inside the fuel gauge lights up.
If it lights up, check the fuel level and add fuel.

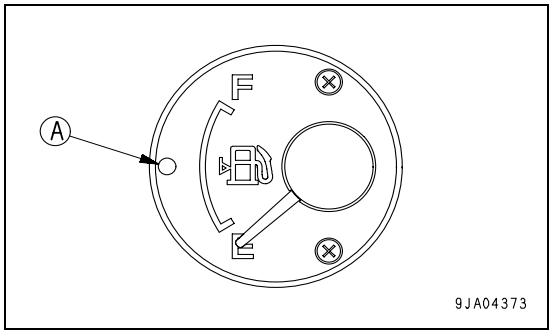

Speedometer

This meter (4) indicates the travel speed of the machine.

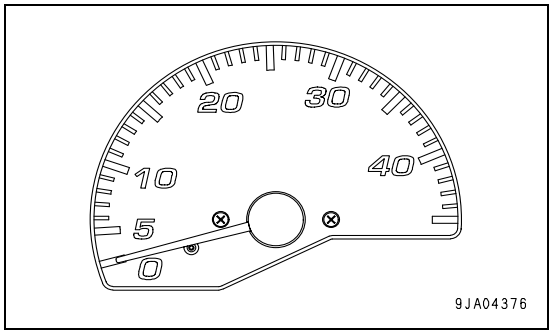

Meter display pilot lamp

This lamp (5) displays the unit for the travel speed.

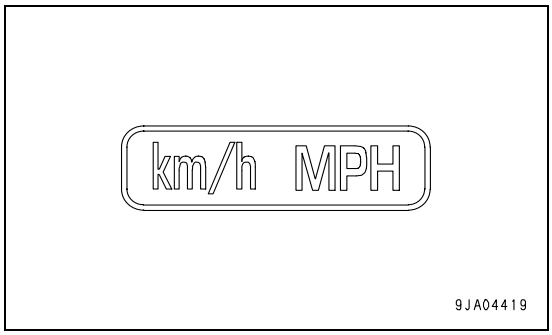

https://truckmanualshub.com/

Other functions of machine monitor

The machine monitor also has the following functions: Odometer, filter/oil replacement time reset, language selection, HST selector function.

Method of displaying odometer

Use this when checking the total distance that the machine has traveled.

1. Check that the character display is showing the service meter or the action code. If it is giving any other display, turn the starting switch OFF, then turn the starting switch to the ON position and wait for the above display to be given.
2. Press the (◇) of monitor panel mode selector switch 1. It displays the odometer.
3. When completing the operation, press (■) of monitor panel mode selector switch 1 or turn the starting switch OFF.

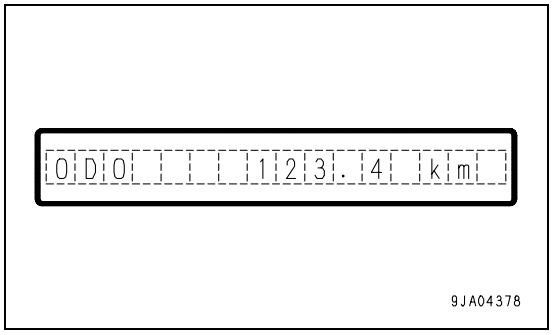

https://truckmanualshub.com/

Reset method for filter, oil replacement time

The filter and oil replacement time is displayed on the character display, so if the filter and oil have been replaced, reset the filter and oil change time.

1. Press the (◇) of monitor panel mode selector switch 1, and display the odometer.
2. Press (>) or (<) of monitor panel mode selector switch 2 and display “MAINTENANCE MONITOR“.

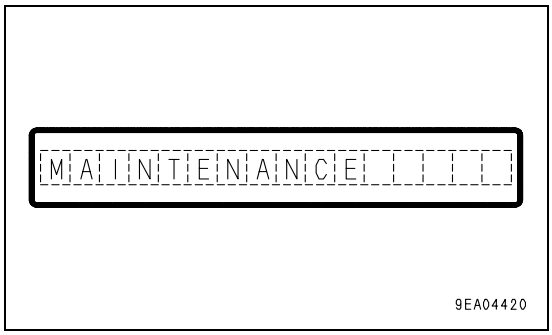

3. Press the (◇) of monitor mode selector switch 1.
   The item is displayed, and then the replacement interval is displayed in the center and the number of times of replacement is displayed on the right in turn for 3 seconds each.
4. Press the (>) or (<) of monitor panel mode selector switch 2 to display the item (filter or oil) which has reached the replacement time.

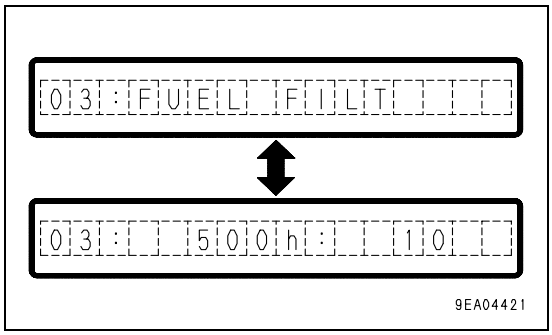

5. Press the (◇) of monitor mode selector switch 1.
   [RESET] and [YES <> NO] are displayed in turn.
6. When resetting the replacement time, press (>) or (<) of monitor panel mode selector switch 2, align the cursor with “YES“, then press (■) of machine monitor mode selector switch 1. It will reset and return to the previous screen.
   To abort, align the cursor with “NO“, then press (■) of monitor panel mode selector switch 1.
7. When resetting the replacement time for another item, carry out the procedure from Step 4. After completing, press (■) of monitor panel mode selector switch 1 twice or turn the starting switch OFF.

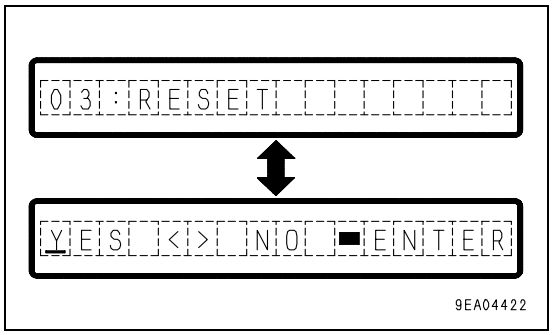

https://truckmanualshub.com/

Method for selecting language

Use this when switching the language displayed on the character display.
The following explanation is for when English is set as the language for the character display.

1. Press the (◇) of monitor panel mode selector switch 1, and display the odometer.
2. Press (>) or (<) of monitor panel mode selector switch 2 and display “LGUAGE“.

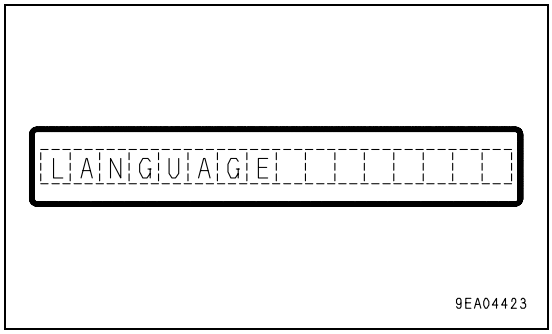

3. Press the (◇) of machine mode panel selector switch 1. The presently selected language is displayed.
4. Press (>) or (<) of monitor panel mode selector switch 2 and select the language.
   The available languages are English, Japanese, German, French, Italian, Spanish, and Swedish.
5. After selecting the language, press the (◇) of monitor mode selector switch 1. This confirms the language. To abort, press the (■) of monitor mode selector switch 1.
6. When completing the operation, press (■) of monitor panel mode selector switch 2 twice or turn the starting switch OFF.

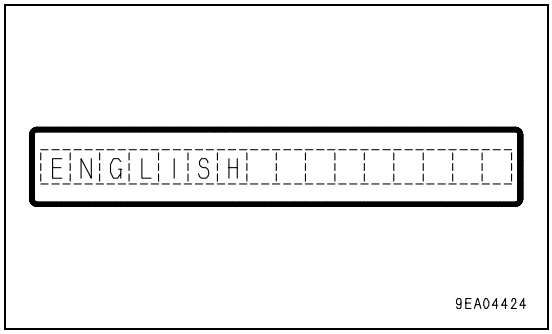

https://truckmanualshub.com/

Method of selecting HST changing function

When the speed range selector switch is in 3rd or 4th position, there are two selections available for the HST. Use this when changing the selection.

Function	Speed range selector switch position	
	3rd position	4th position
A (default setting)	F3, R3	F4, R4
B	F3, R2	F4, R2

1. Press the (◇) of monitor panel mode selector switch 1, and display the odometer.
2. Press (>) or (<) of monitor panel mode selector switch 2 and display “SELECT HST“.

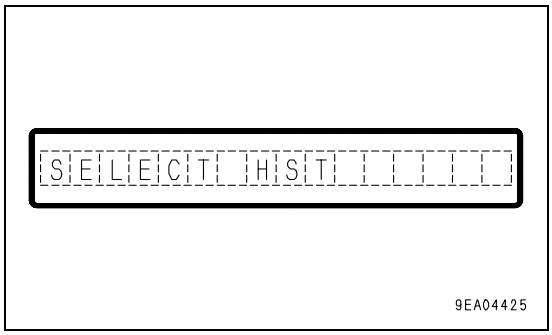

3. Press the (◇) of monitor mode selector switch 1. The present HST selection is displayed.
4. Press the (<) or (>) of monitor mode selector switch 2, and align the cursor with A or B.
5. Press the (■) of monitor mode selector switch 1.
   The HST selection is confirmed and the screen returns to the previous screen.
6. When completing the operation, press (■) of monitor panel mode selector switch 2 twice or turn the starting switch OFF.

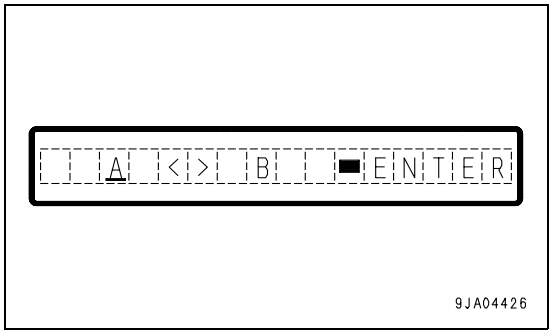

https://truckmanualshub.com/

Switches

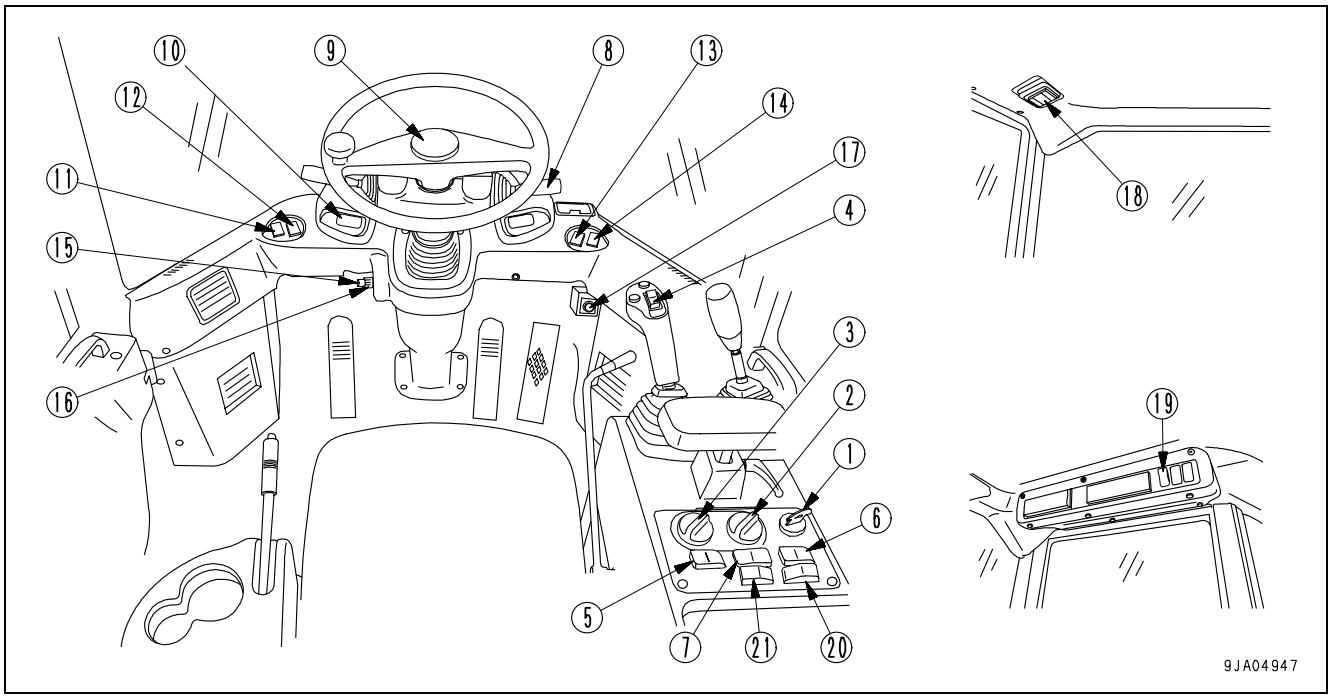

(1) Starting switch	(11) Front working lamp switch
(2) Speed range selector switch	(12) Rear working lamp switch
(3) Variable shift control switch	(13) Monitor panel mode selector swiitch 1
(4) Directional selector switch	(14) Monitor panel mode selector swiitch 2
(5) Directional selector actuation switch	(15) Front wiper switch
(6) Traction control switch	(16) Rear wiper switch
(7) E.C.S.S. switch	(17) Cigarette lighter
(8) Lamp switch Turn signal lever Dimmer switch	(18) Room lamp switch
	(19) Rear heated wire glass switch
	(20) Attachment selection switch
(9) Horn button	(21) Dump speed switch
(10) Hazard lamp switch	

Starting switch

This switch (1) is used to start or stop the engine.

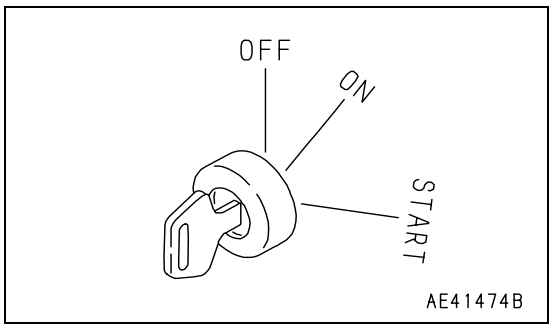

OFF position
In this position, it is possible to insert or remove the starting switch key. All the electric system switches are off, and the engine will stop.

ON position
In this position, electric current flows to the charging circuit, lamp circuit, and accessory circuit.
Keep the starting switch key at the ON position while the engine is running.

START position
This is the position to start the engine. Hold the key at this position while cranking. Release the key immediately after the engine has been started. The key will return to the ON position when released.

https://truckmanualshub.com/

Speed range selector switch

Use this switch (2) to switch the speed range.
Use 1st and 2nd for operations, and 3rd and 4th for travel.
Position (a): 1st
Position (b): 2nd
Position (c): 3rd
Position (d): 4th

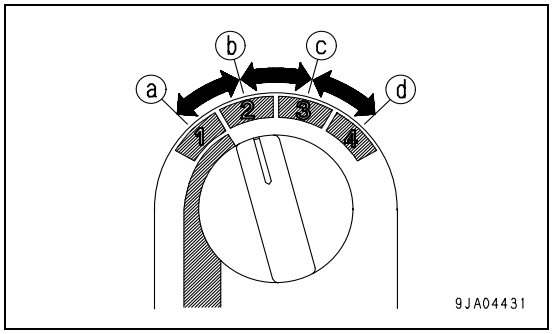

Variable shift control switch

When the speed range is in 1st, it is possible to use this dial (3) to set the maximum speed as desired.
Turn the dial to the right to increase the setting; turn it to the left to decrease the setting.
The conditions for use may differ according to the condition of the road surface.

Installed tire	Max. speed [km/h (MPH)]
Standard tire (20.2-25)	4.0 - 13.0 (2.5 - 8.1)
Small diameter tire (17.5-25)	3.6 - 11.7 (2.2 - 7.3)

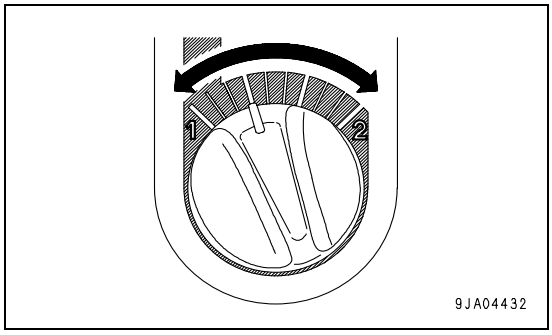

Directional selector switch

This switch (4) is used to switch the direction of travel of the machine between forward and reverse.
F Position: FORWARD
N Position: Neutral
R Position: REVERSE
Before operating this switch, check that the condition is as follows:

- Directional lever is at N.
- Directional selector switch actuation switch is at ON.

If the condition is not as above, the switch will not work.
For details, see “Changing direction on page 3-75“.

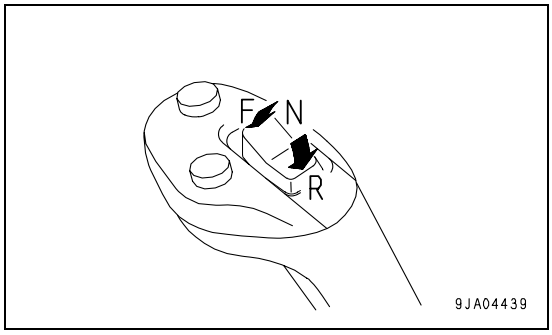

Directional selector switch actuation switch

When this switch (5) is turned on, the directional selector switch is actuated.
Position (a): ON
The directional selector switch is actuated.
Position (b): OFF
The directional selector switch is turned off.

REMARK

- **Turn this switch ON when the directional lever and directional selector switch are at the neutral position. At any other position, this switch does not work.**
- **Even if the directional selector switch is functioning, when the directional lever is operated, the operation of the directional lever is given priority.**

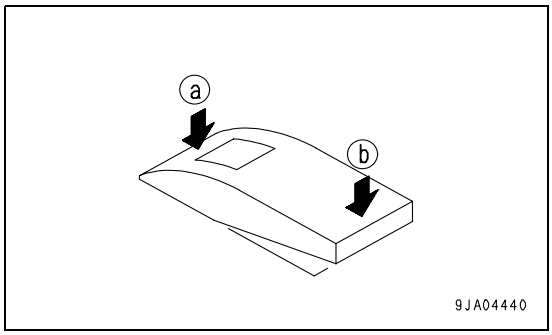

https://truckmanualshub.com/

Switch for traction control

The traction control is switched on by means of this switch (6). When the traction control is on, the drive force that is transferred to the wheels is reduced in the 2nd to 4th gears.
Position (ON): ON
Position (OFF): OFF

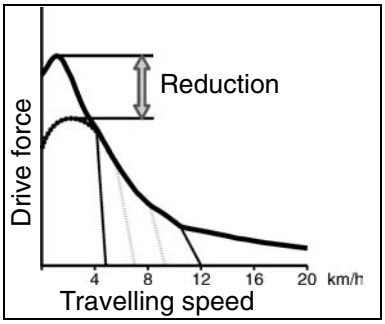

E.C.S.S. switch

WARNING

- **If the machine is traveling or the work equipment is raised, the moment the E.C.S.S. switch is turned ON, the work equipment will move.**
- **If operations are carried out with the E.C.S.S. switch at the ON position, the moment the E.C.S.S. switch is operated, the work equipment may move.**
- **Never turn the E.C.S.S. switch ON during inspection or maintenance. The work equipment will move and this will create a dangerous situation.**

NOTICE

- **Always stop the machine and lower the work equipment to the ground before operating the E.C.S.S. switch.**
- **When carrying out inspection and maintenance, first lower the work equipment to the ground, then turn the E.C.S.S. switch OFF before starting the inspection and maintenance operation.**
- **When carrying out leveling work, turn the E.C.S.S. switch OFF.**

The E.C.S.S. is a device that uses the hydraulic spring effect of an accumulator to absorb the vibration of the chassis during travel and allows the machine to travel smoothly and at high speed.

This switch (7) is used to turn the E.C.S.S. ON and OFF.
Position (a): ON
The pilot lamp (A) lights up and the E.C.S.S. is actuated.
Position (b): OFF
The E.C.S.S. is not actuated.

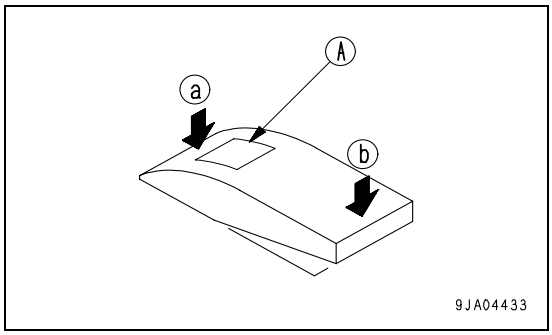

REMARK

The travel damper is automatically actuated when the travel speed becomes more than 6 km/h (3.7 MPH); when the travel speed goes below 5 km/h (3.1 MPH) it is automatically disengaged (when 20.5-25 tires are used).

https://truckmanualshub.com/

Lamp switch

This switch (8) is used to light up the front lamps, side clearance lamps, tail lamps, and instrument panel.
Position (a): OFF
Lamps go out.
Position (b): Side clearance lamps, tail lamps, and instrument panel light up.
Position (c): Head lamps light up in addition to lamps at (b) position.

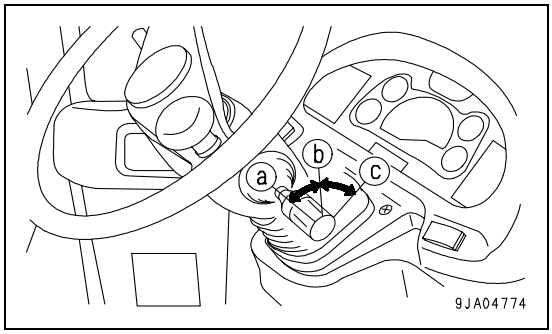

REMARK
The lamp switch can be operated regardless of the position of the lever.

Turn signal lever

This switch (8) is used to operate the turn signal lamp.
(a) position : LEFT TURN (Push lever FORWARD.)
(b) position : OFF
(c) position : RIGHT TURN (Pull lever BACK.)

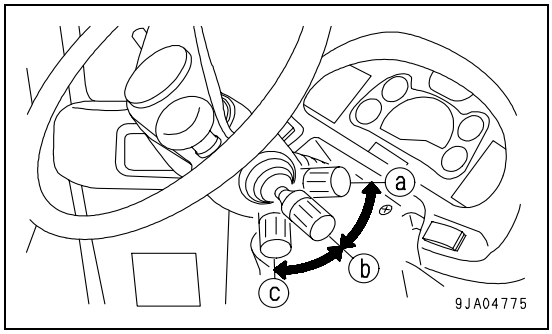

REMARK
- **When the lever is operated, the pilot lamp turn signal pilot lamp also flashes.**
- **When the steering wheel is turned back, the lever automatically returns to its original position. If it does not return, return it manually.**

Dimmer switch

This switch (8) is used to switch the head lamps between high beam and low beam.
Position (a): Low beam
Position (b): High beam

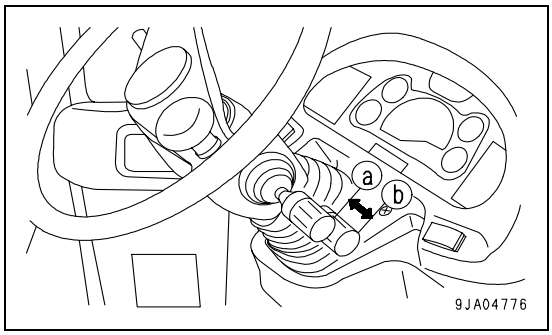

Horn button

When the horn button (9) in the center of the steering wheel is pressed, the horn will sound.

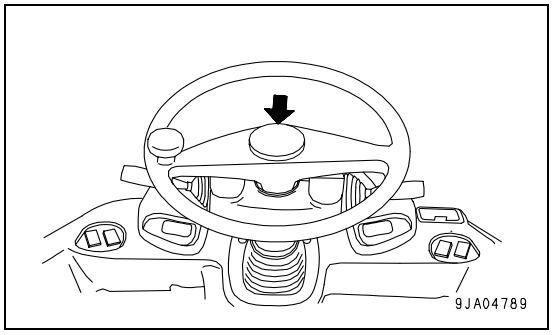

https://truckmanualshub.com/

Hazard lamp switch

WARNING

Use the hazard lamp only in emergencies. Using the hazard lamp when traveling may cause confusion for other machine operators.

This switch (10) is used in emergencies, such as when the machine breaks down and has to be parked on the road.

Position (a):
Direction indicator lamp and directional indicator pilot lamp flash, and pilot lamp (A) lights up at the same time.

Position (b):
Lamps go out

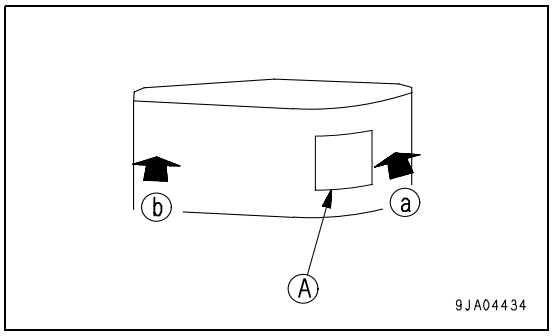

Front working lamp switch

WARNING

Always turn the working lamp off before traveling on public roads.

This switch (11) is used to light up the front working lamp.
Position (a): Working lamp and pilot lamp (A) light up
Position (b): Working lamp goes out

REMARK
If the lamp switch is not at the ON position for the side clearance lamp or head lamp, the working lamp will not light up.

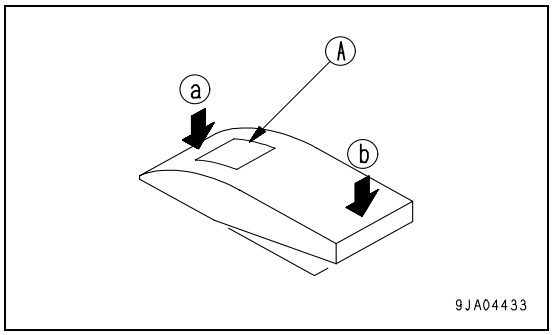

Rear working lamp switch

WARNING

Always turn the working lamp off before traveling on public roads.

This switch (12) is used to light up the rear working lamp.
Position (a): Working lamp and pilot lamp (A) light up
Position (b): Working lamp goes out

REMARK
If the lamp switch is not at the ON position for the side clearance lamp or head lamp, the working lamp will not light up.

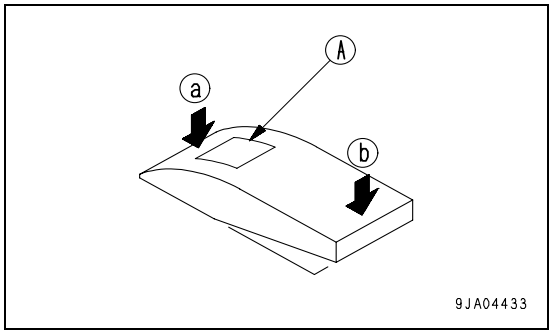

https://truckmanualshub.com/

Monitor panel mode selector switch 1

This switch (13) is used to switch the function of the character display.
When the switch is released, it automatically returns to its original position.

The basic operation is as follows.
Position (◇):
Press here to select (confirm) each mode or operation.
Position (■):
Press here to cancel each mode or operation.

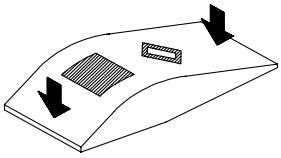

Monitor panel mode selector switch 2

This switch (14) is used to switch the function of the character display.
When the switch is released, it automatically returns to its original position.

The basic operation is as follows.
Position (>): Press here to go on to the next screen, or to move the cursor forward, or to increase the number when entering numerals.
Position (<): Press here to go back to the previous screen, or to move the cursor back, or to reduce the number when entering numerals.

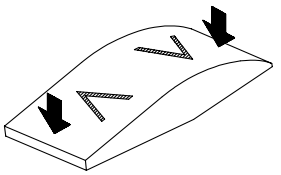

Front wiper switch

When rotary switch (A) of this switch (15) is turned, the front wiper will move.
If push button (B) is pressed, washer liquid will be sprayed out onto the front glass while the button is being pressed.

Position(a): (OFF) stop
Position(b): (INT) Intermittent wiper
Position(c): Low-speed wiper
Position(d): High-speed wiper

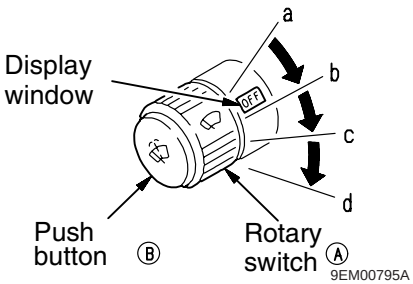

Rear wiper switch

When lever (C) of this switch (16) is turned, the rear wiper will move.

Position (a): Washer liquid is sprayed out.
Position (b): OFF
Position (c): Wiper is operated.
Position (d): Washer liquid is sprayed out, wiper is operated.

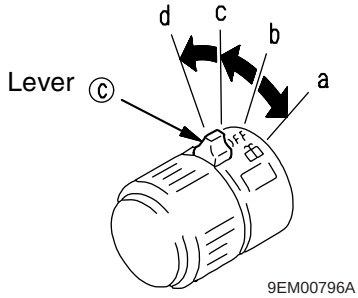

https://truckmanualshub.com/

Cigarette lighter

This is used to light cigarettes.
After cigarette lighter (17) is pushed in, it will return to its original position after a few seconds, then you may pull it out and light a cigarette.

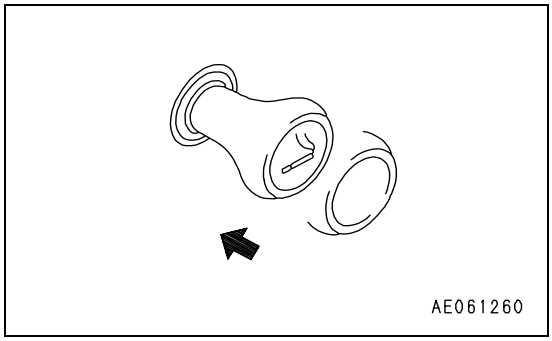

Room lamp switch

The switch (18) is used to turn the room lamp ON and OFF.

Position (a): OFF
Position (b): Lights up when the cab door opens
Position (c): Lights up

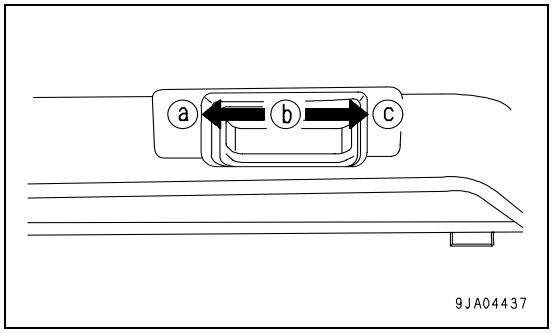

REMARK

- **The room lamp lights up even when the main switch is OFF, so when leaving the operator's compartment, turn the switch to position (a) (OFF) or (b).**
- **When operating with the cab door fully open, set the switch to position (a) (OFF).**

Rear heated wire glass switch

When this switch (19) is pressed, electric current flows through the heated wire glass at the rear and the mist is removed from the glass.
Position (a): ON (removes mist from glass)
Position (b): OFF

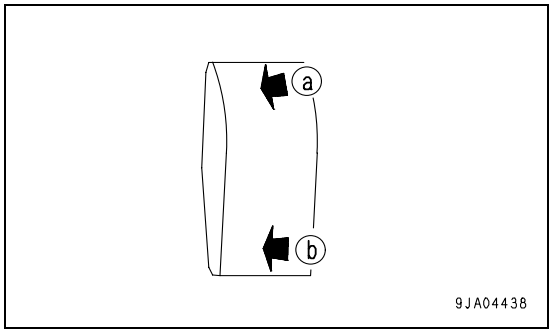

https://truckmanualshub.com/

Attachment selection switch

This switch (20) switches the bucket positioner and fork positioner.

Position (a): When using the bucket, set to this position.
Position (b): When using the fork, set to this position.

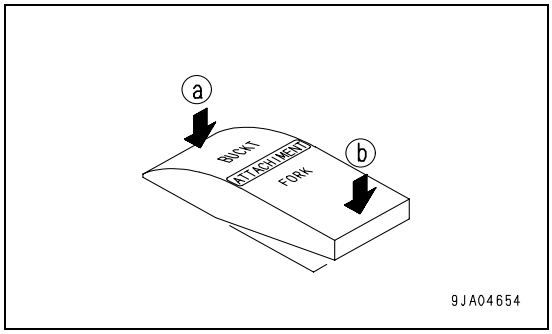

Dump speed switch

Use this switch (21) to select the bucket dump speed.

Position (a): High speed
Position (b): Low speed

REMARK
The bucket tilt speed is not affected by this switch.

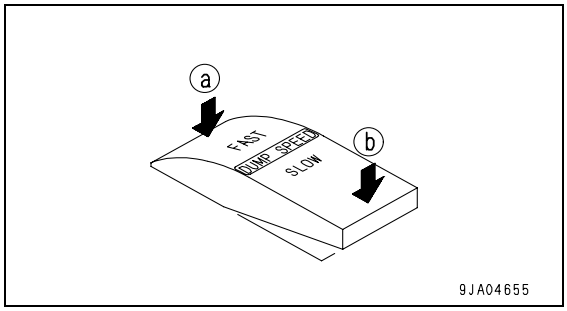

https://truckmanualshub.com/

Control levers, pedals

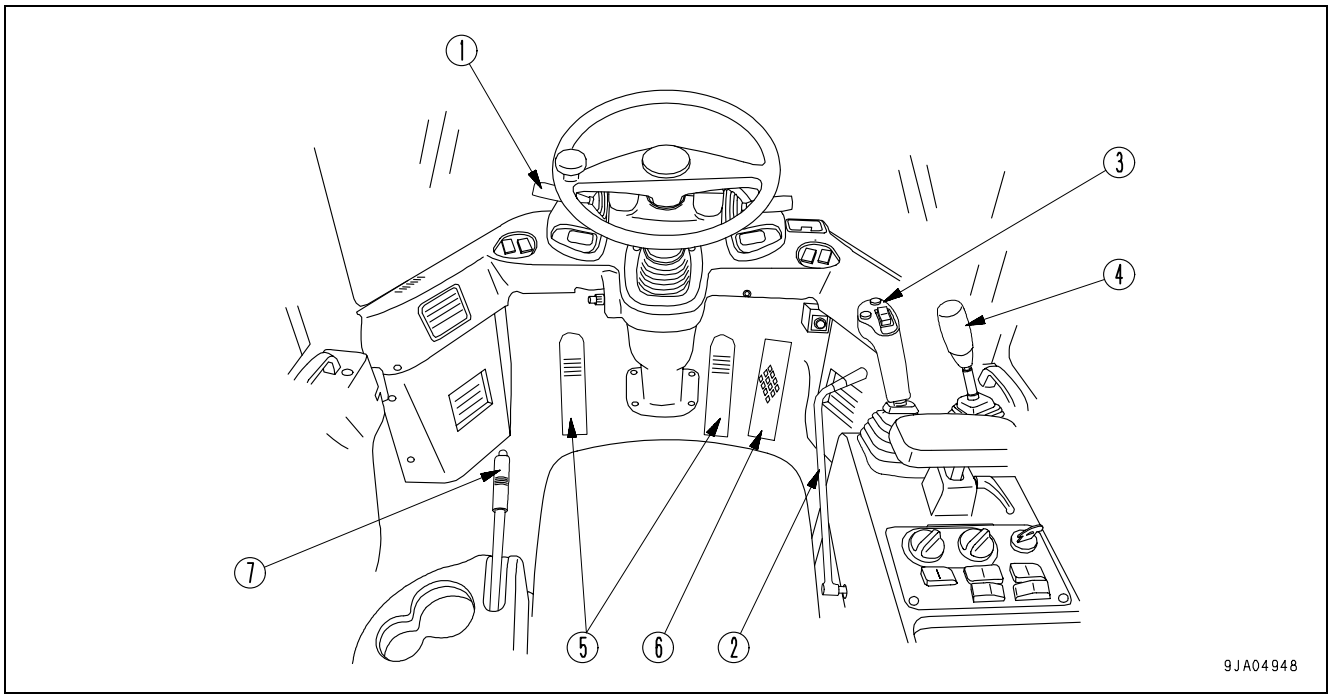

(1) Directional lever	(5) Brake pedal
(2) Safety lock lever (for work equipment lever)	(6) Accelerator pedal
(3) Work equipment lever	(7) Parking brake lever
(4) Auxiliary control lever	

DIRECTIONAL LEVER

This lever (1) is used to switch the direction of travel of the machine between forward and reverse.
When starting the engine, if the directional lever is not at the N position, the engine will not start.
Position (a): FORWARD
Position N: NEUTRAL
Position (b): REVERSE

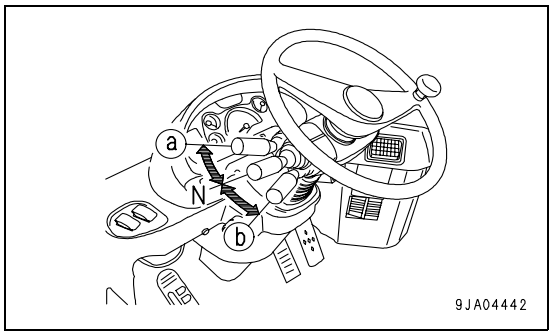

REMARK
When the starting switch is turned to the ON position, if the directional lever is not at the N position, the central warning lamp lights up and the alarm buzzer sounds intermittently.
When the directional lever is set to the N position, the central warning lamp goes out and the alarm buzzer stops.

https://truckmanualshub.com/

Safety lock lever (for work equipment lever)

WARNING

- **Before leaving the operator's seat, set the safety lock lever securely to the LOCK position. If the safety lock lever is not at the LOCK position, and work equipment control lever is touched by mistake, it may lead to a serious accident.**
- **If the safety lock lever is not placed securely at the LOCK position, the work equipment control lever may move, and this may lead to a serious accident or personal injury. Check that the lever is in the LOCK position.**
- **When pulling up or pushing down the safety lock lever, be careful not to touch work equipment control lever.**

This lever (2) is a lock device for the work equipment control lever.
Push the safety lock lever down to lock it.

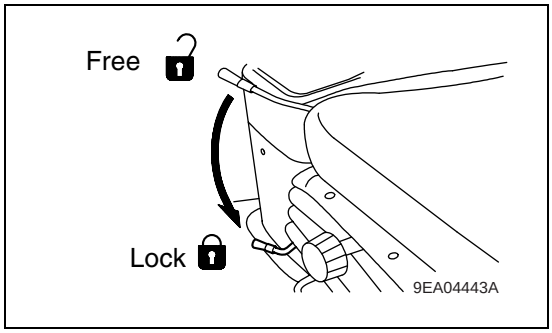

REMARK
If the safety lock lever is at the LOCK position, the work equipment will not move even when the work equipment control lever is operated.

Work equipment lever

Use this lever (3) to operate the lift arm and bucket.

NOTICE
Do not use the FLOAT position when lowering the bucket. Use the FLOAT position when leveling, see "Leveling operations on page 3-86".

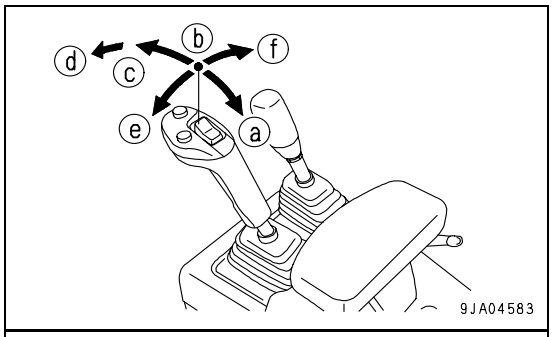

Position (a): RAISE
When the work equipment control lever is pulled further from the RAISE position, the lever is stopped in this position until the lift arm reaches the preset position of the kickout, and the lever is returned to the HOLD position.
Position (b): HOLD
The lift arm and bucket stop and remain in the same position.
Position (c): LOWER
Position (d): FLOAT
The lift arm moves freely under external force.

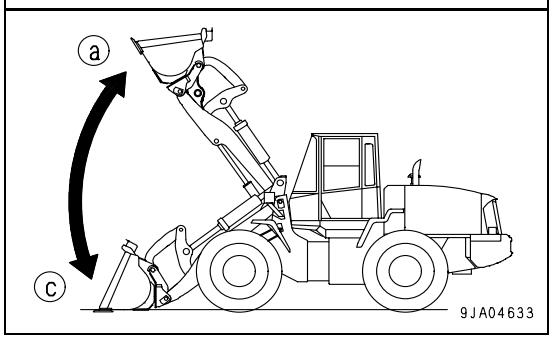

Position (e): TILT
When the work equipment control lever is pulled further from the TILT position, the lever is stopped in this position until the bucket reaches the preset position of the positioner, and the lever is returned to the HOLD position.
Position (f): DUMP

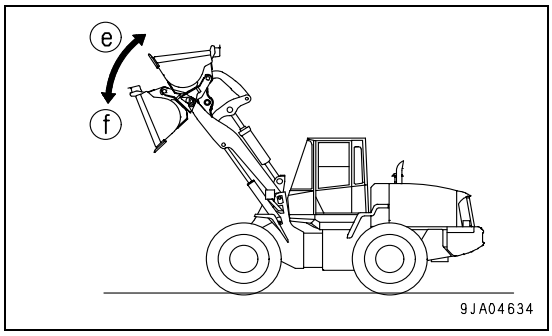

https://truckmanualshub.com/

Auxiliary control lever

(When multi-purpose bucket is installed)
This lever (4) operates the clam on the multi-purpose bucket.

Position (a): Clam closes
Position (b): HOLD
The clam stops and remains in the same position.
Position (c): Clam opens

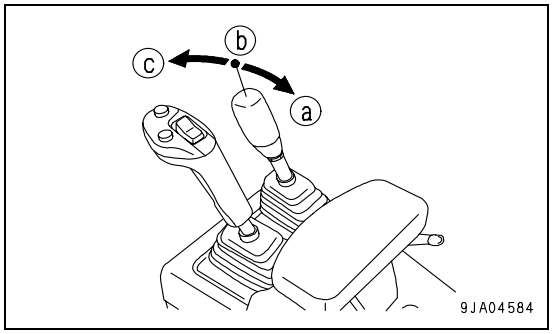

Brake pedal

WARNING

- **When traveling downhill, always use the right brake pedal, and use the braking force of the engine together with the brake.**
- **Do not use the brake pedal excessively. If the brake is used too frequently, the brake will overheat. If this happens, the brakes will not work, and may lead to a serious accident.**
- **Do not put your foot on the brake pedal unless necessary.**

These pedals (5) operate the brakes.
Use the brake pedal for normal braking operations.
The left and right pedals are interconnected and work together.

REMARK
When using the brake pedal and accelerator pedal together to reduce the travel speed or stop the machine when carrying out the operation, it is more convenient to use the left brake pedal.

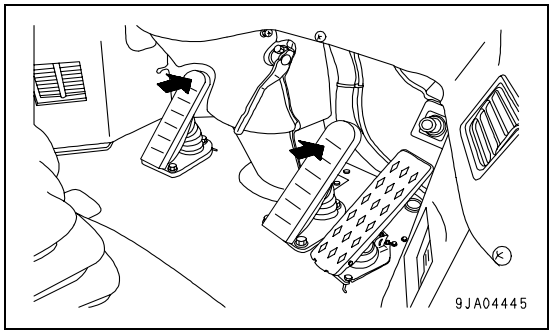

Accelerator pedal

This pedal (6) controls the engine speed and output.
The engine speed can be freely controlled between low idling and full speed.

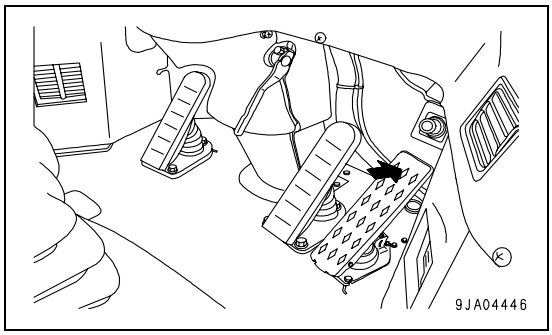

https://truckmanualshub.com/

Parking brake lever

⚠ WARNING

Always apply the parking brake when leaving the machine or when parking it.

NOTICE

- **Never use the parking brake lever to brake the machine when traveling except in an emergency. The parking brake may be damaged and this may lead to a serious accident. Apply the parking brake only after the machine has stopped.**
- **If the parking brake has been used as an emergency brake when traveling at high speed (near the maximum speed), contact your Komatsu distributor to have the parking brake checked for any abnormality.**

This lever (7) operates the parking brake.
Pull the lever up to the LOCK position to actuate the parking brake. At the same time, the parking brake pilot lamp will light up.
To release the brake, pull the lever, then press button (A) at the tip of the lever and return the lever to the FREE position. At the same time, the parking brake pilot lamp will go out.

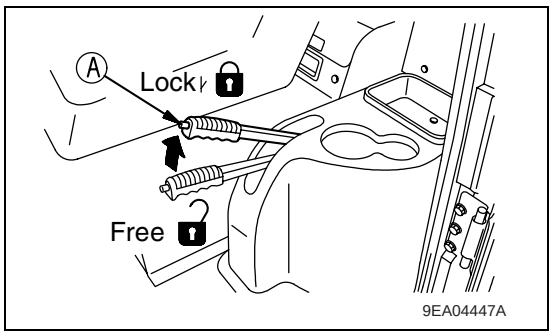

REMARK
If the directional lever is placed at the FORWARD or REVERSE position with the parking brake still applied, the central warning lamp will light up and the buzzer will sound.
Before operating the directional lever, check that the parking brake lever is at the FREE position.
When the parking brake is applied, the machine will not move even if the directional lever is operated.

Steering tilt lock lever

⚠ WARNING

Stop the machine before adjusting the tilt of the steering wheel. If this operation (adjustment) is carried out while the machine is moving, it may lead to a serious accident or personal injury.

This lever allows the steering column to be tilted forward or backward.
The amount of adjustment is 8° to the front and 10° to the rear (stepless) from the neutral position.

1. Set the lever (1) to FREE position (a).
2. Set the steering wheel (2) to the desired position, then set lever (1) to LOCK position (b).

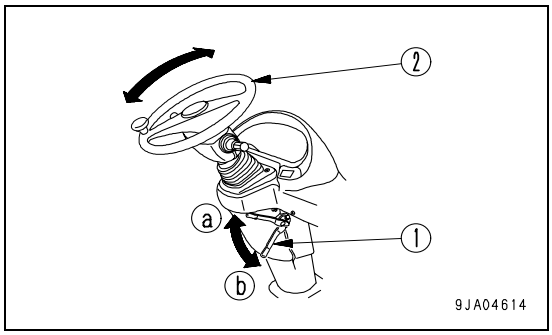

https://truckmanualshub.com/

Cap and cover with lock

Use the starting key to open and close the locks on the caps and covers.
For details of the locations of the caps and covers with locks, see “Locking on page 3-95“.
Insert the key as far as it will go, then turn it. If the key is turned before it is inserted fully, it may break.

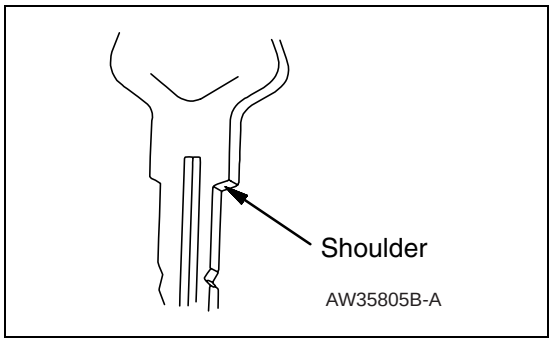

Method of opening and closing cap with lock

(For the fuel tank filler port)

To open the cap

1. Insert the key into the key slot.
2. Turn the key clockwise, align the key slot with the match mark on the cap, then open the cap.

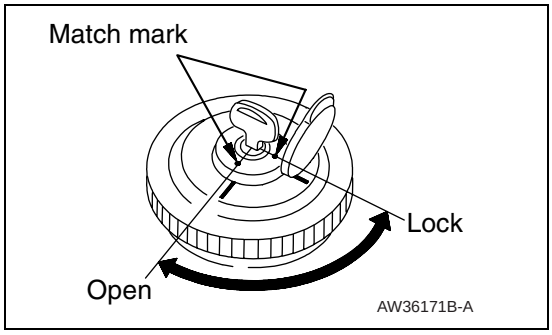

To lock the cap

1. Turn the cap until tight, then insert the key into the key slot.
2. Turn the key counterclockwise and take the key out.

Method of opening and closing cover with lock

(Engine side cover)

To open the cover

1. Insert the key into the key slot.
2. Turn the key counterclockwise and open the cover by pulling the cover grip.

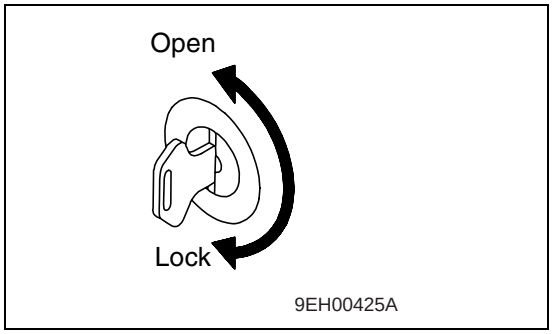

To lock the cover

1. Close the cover and insert the key into the key slot.
2. Turn the key clockwise and take the key out.

https://truckmanualshub.com/

Safety bar

WARNING

- **When carrying out maintenance or transporting the machine, always set the safety bar to the LOCK position.**
- **Always remove the safety bar for travel operations. If it is not removed, the steering wheel cannot be used for steering, and this may lead to serious damage or injury.**

This is a device used to lock the front and rear frames during maintenance or when transporting the machine. It prevents the front and rear frames from articulating.

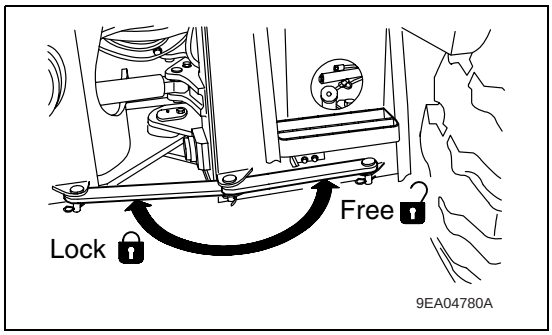

Towing pin

1. Align protrusion (1) in the towing pin with groove (2) in the counterweight, then insert the pin and turn it 180°.

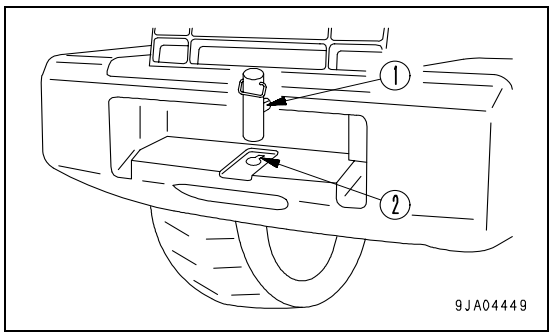

2. To prevent the towing pin from turning, fold the handle of the towing pin and set it in position.

   Reverse this operation to remove the pin.

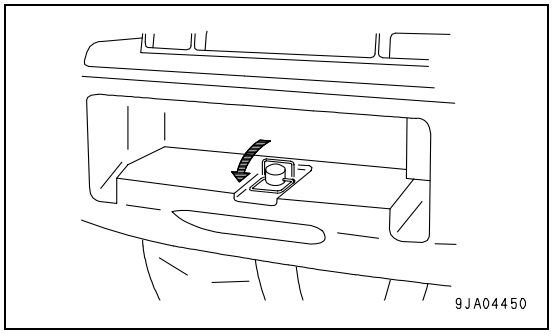

Grease pump

The grease pump is stowed inside the left engine side cover at the rear of the machine.
After using the pump, wipe off all the grease stuck to the pump, set it in the clamp inside the cover, then fit the chain to the clamp to prevent the pump from moving.
In addition, form the rubber ring into a figure of 8 as shown in the diagram on the right, and secure in position.

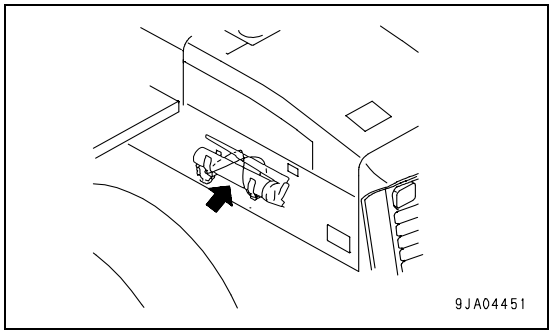

https://truckmanualshub.com/

Cab door inner lock

(Right door)
Press cab door inner lock to lock the door.
Position (a): Lock
Position (b): Release

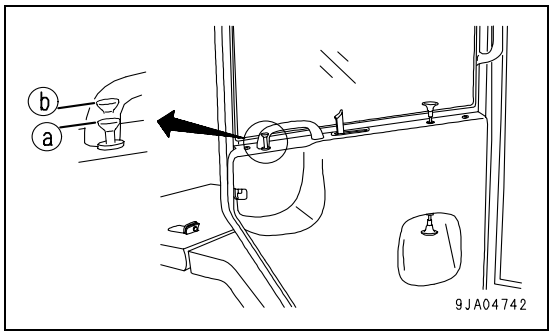

Cab door open lock

When getting in or out of the operator's compartment, or when operating with the door open, use this lock to hold the door in position.

1. Push the door against catch (1) to lock it in position.
2. When attaching the door in position, lock it firmly to the catch.
3. When getting on or off the machine, hold the handrail on the inside.

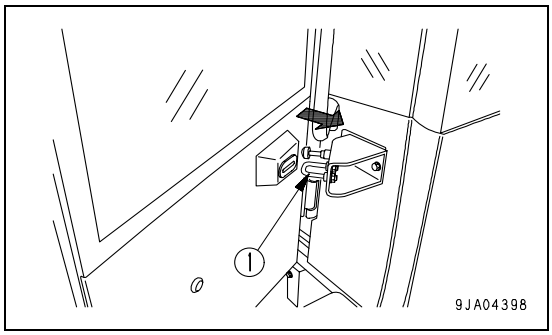

4. When closing the door from the operator's seat, push knob (2) to release the catch.
5. When closing the door after getting off the machine, pull knob (3) to release the catch.

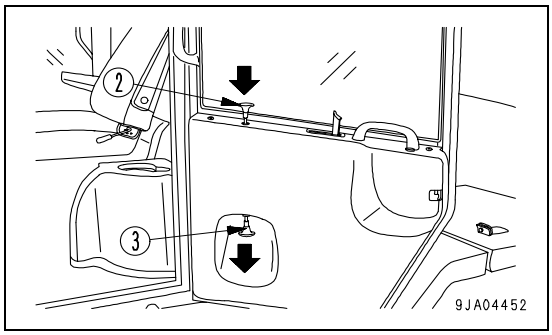

Cab window open lock cancel knob

(Left side door)
Use this knob when you want to move the door window glass up or down to open or close it.
Grip lock cancel knob (1) to release the lock, and move it down to a lower lock position. Release lock cancel knob (1).
There is 1 point for lock position (2).

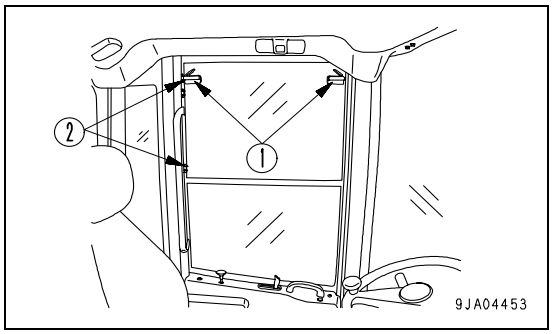

https://truckmanualshub.com/

Fuse

NOTICE
Before replacing a fuse, be sure to turn off the starting switch.

The fuses protect the electrical equipment and wiring from burning out.
If the fuse becomes corroded, or white powder can be seen, or the fuse is loose in the fuse holder, replace the fuse.
Replace the fuse with another of the same capacity.

Remove cover (1). The fuse boxes are A and B.

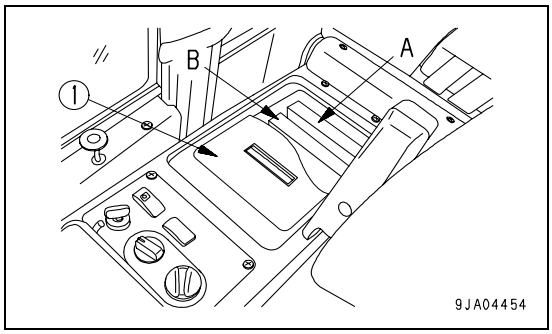

Fuse capacity and name of circuit

Fuse box A

No.		Name of circuit
(1)	20A	Starting switch
(2)	10A	Hazard warning flashing lamp
(3)	10A	HST control A
(4)	10A	Parking brake A
(5)	10A	Instrument panel
(6)	10A	Radio A, Room lamp
(7)	10A	Auxiliary pwe (Battery +24V)
(8)	10A	Head Lamp L.H.
(9)	10A	Head Lamp R.H.
(10)	10A	Turn signal lamp
(11)	10A	Back lamp, Stop lamp
(12)	20A	HST control B
(13)	10A	Work equipment positioner
(14)	10A	Wiper
(15)	10A	Radio B

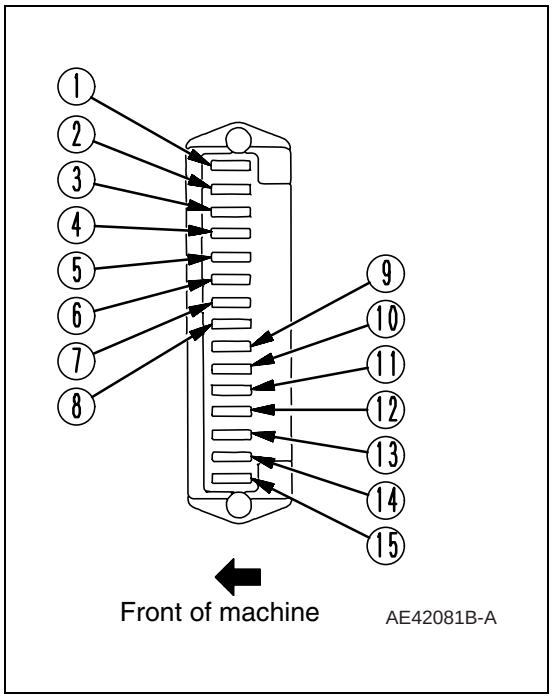

https://truckmanualshub.com/

Fuse box B

No.		Name of circuit
(1)	20A	Air conditioner A
(2)	20A	Air conditioner B
(3)	10A	Beacon lamp (if equipped)
(4)	10A	KOMTRAX
(5)	10A	Load meter (if equipped)
(6)	20A	D/C converter
(7)	10A	Auxiliary pwr (Key on +24V)
(8)	10A	Parking brake B
(9)	10A	Horn
(10)	10A	Side marker lamp L.H.
(11)	10A	Side marker lamp R.H.
(12)	20A	Front work lamp
(13)	20A	Rear work lamp
(14)	10A	Auxiliary
(15)	10A	Auxiliary

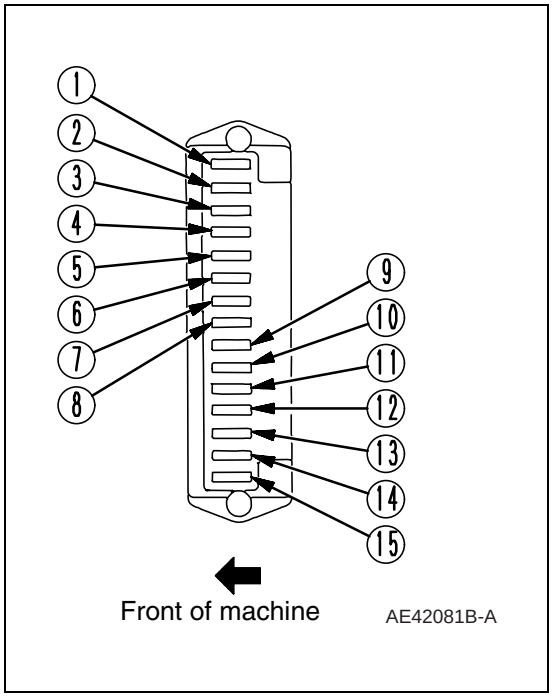

Slow blow fuse

If the power does not come on when the starting switch is turned ON, the slow blow fuse may be blown, so check and replace it.
The slow blow fuse is beside the engine on the left side of the machine.

1. Open the cover (1).
2. Open the cover of slow blow fuse box (2) and inspect.

   For details of the method of replacing the slow blow fuse, see Section “Replace slow blow fuse on page 4-34“.

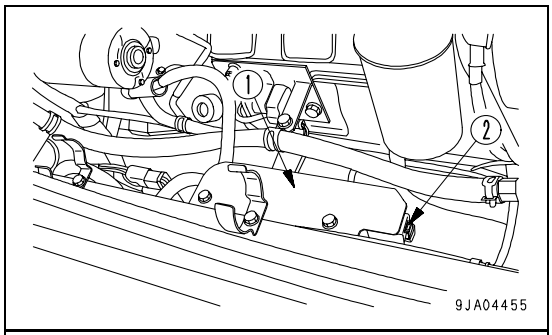

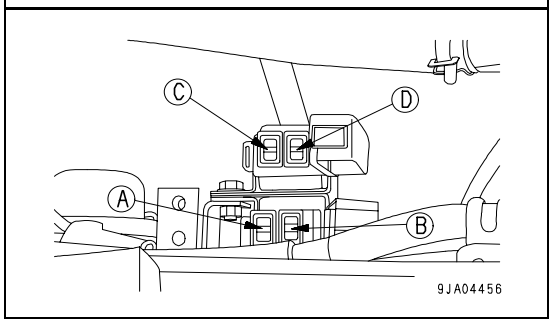

Slow blow fuse

A	80A	Chassis power source
B	120A	Engine preheating power source
C	30A	Battery power (starting switch, hazard)
D	30A	Fuel solenoid power source

https://truckmanualshub.com/

Power outlet

Removing the cigarette lighter (1) allows use of its power. The maximum electric current is 7 A (168 W).

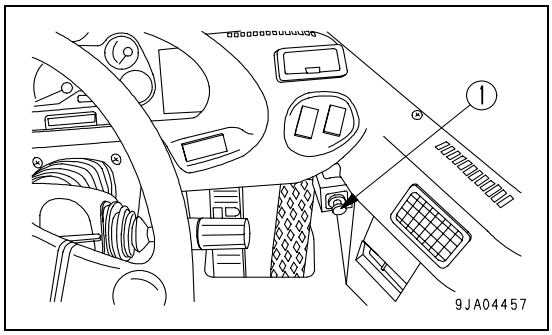

https://truckmanualshub.com/

Air conditioner

By taking fresh air into the cab through a filter, it is possible to raise the pressure inside the cab. This makes it possible to provide a pleasant working environment even on dusty jobsites.

General locations and function of control panel

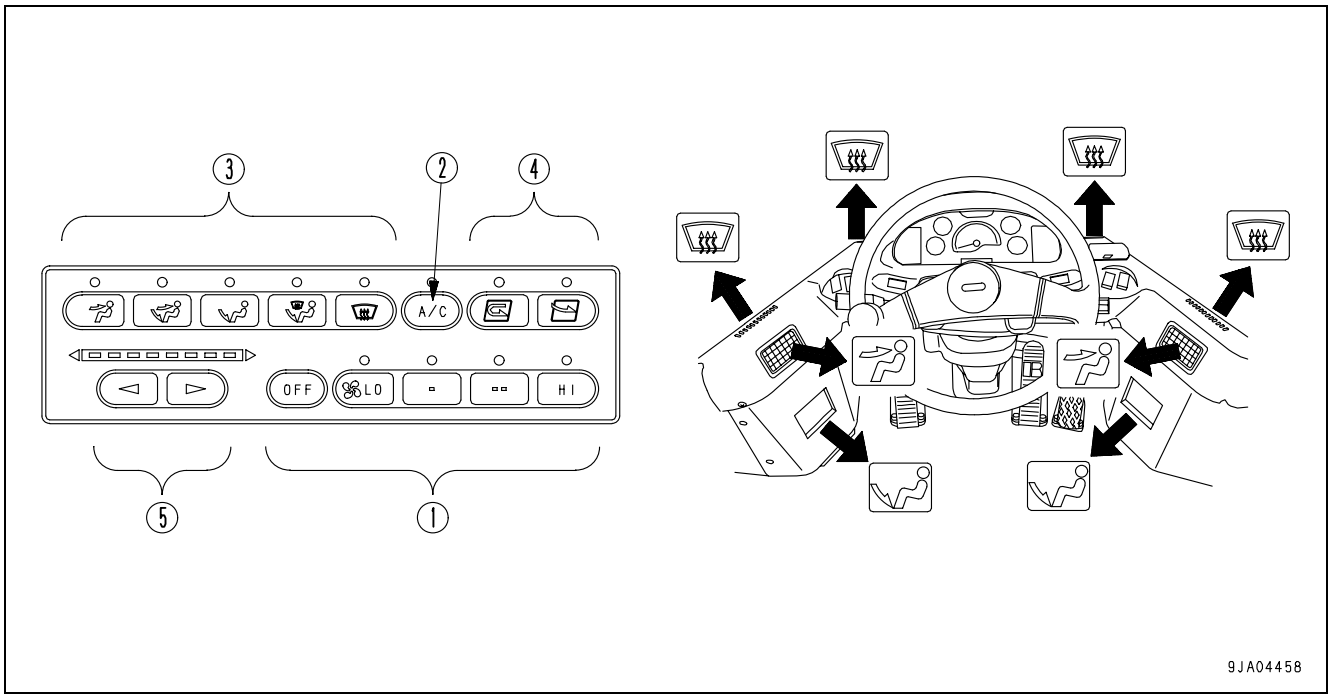

(1) Fan switch	(4) FRESH/RECIRC switch
(2) Air conditioner switch	(5) Temperature control switch
(3) Mode selector switch	

Fan switch

This switch (1) can be used to adjust the air flow to four stages. It also acts as the main switch for the air conditioner. When the OFF switch is pressed, the fan stops.
When the switch is pressed, the indicator lamp above the switch lights up to display the air flow.

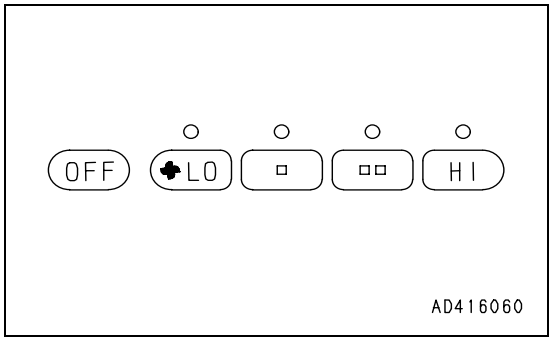

https://truckmanualshub.com/

Air conditioner switch

This switch (2) is used to start or stop the cooling or dehumidifying function.
When the fan switch is turned ON and the air conditioner switch is pressed, the indicator lamp above the switch lights up. When the switch is pressed again, the switch is turned OFF and the indicator lamp goes out.

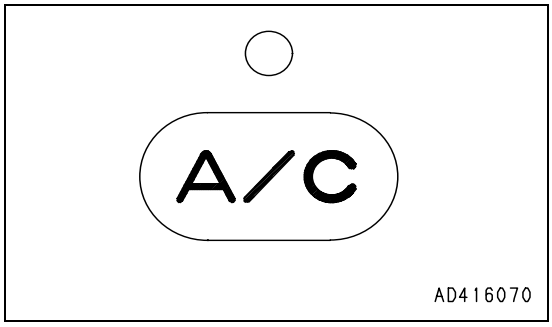

Mode selector switch

This switch (3) is used to select the vents.
The following five vent modes are available: FACE, FACE/FOOT, FOOT, FOOT/DEF, DEF.
When the switch is pressed, the indicator lamp above the switch lights up to display the vent mode.

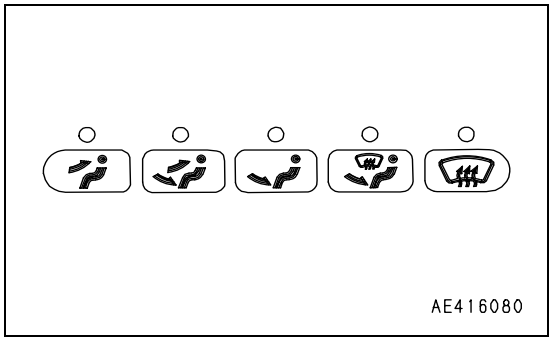

FRESH/RECIRC selector switch

This switch (4) changes between internal air circulation and external air intake.
When pressing the switch, the indicator lamp on the top of switch lights up.

Internal air circulation
This switch (4) is used when wishing to quickly cool or warm the cab or when the air inside the cab is stale.

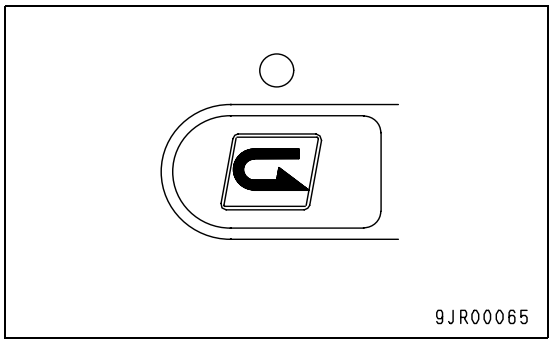

External air intake
This switch (4) is used to cool or warm the cab with the external air intake. Also, it is used for fresh air intake or to remove condensation on windows.

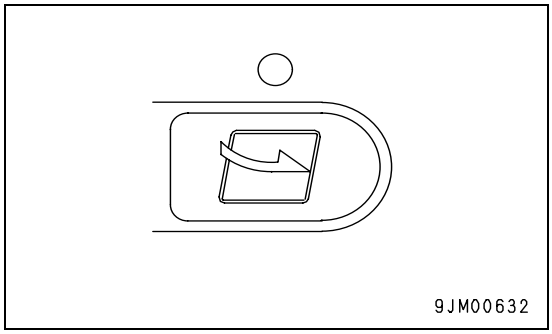

https://truckmanualshub.com/

Temperature control switch

The temperature can be adjusted with this switch (5) by pressing and holding the up or down button.
The temperature level indicator lamps (A) light up to display the temperature of the air coming from the vents.
The more blue lamps on, the lower the temperature is.

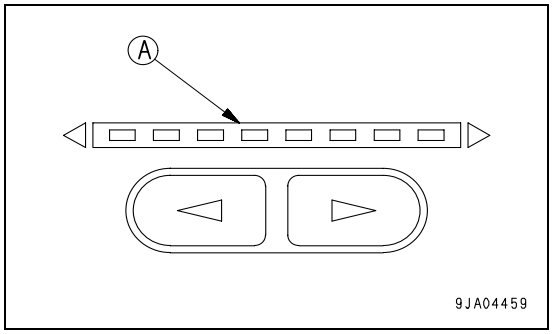

The color of the indicator lamp (A) changes while the switch is being pressed.
When the temperature reaches the desired level, release the switch to set the temperature.
The settings for each mode are retained in memory even when the starting switch is turned OFF.
However, in the following cases, the settings must be made again.

- When the machine has been out of use for more than 7 days
- When the battery voltage is extremely low
- When there has been abnormal interference from outside
- When the fan switch is turned OFF (the setting is not kept in memory with only the air conditioner switch)

If the air conditioner is used at the FRESH position, the inside of the cab will be pressurized and this will prevent the entry of dust.
The higher the position of the fan switch, the more effective the pressurizing becomes.

https://truckmanualshub.com/

Method of operation

Switchs / Condition of use		Fan switch	Air conditioner switch	Temperature control switch	FRESH/RECIRC selector switch	Mode selector switch
Cooling	Rapid	HI	ON	All blue	RECIRC	FACE
	Normal	HI - LO	ON	More than half are blue	FRESH	FACE
Dehumidifying, heating		HI - LO	ON	More than half are red	FRESH	FOOT
Heating	Rapid	HI	OFF	All red	RECIRC	FOOT
	Normal	HI - LO	OFF	More than half are red	FRESH	FOOT
Defroster		HI	ON	More than half are red	FRESH	DEF
Ventilation or pressurizing		HI - LO	OFF	All blue	FRESH	FACE

When carrying out the defrosting, if the temperature control switch is set so that all lamps are red, this will improve the performance for defrosting and demisting.

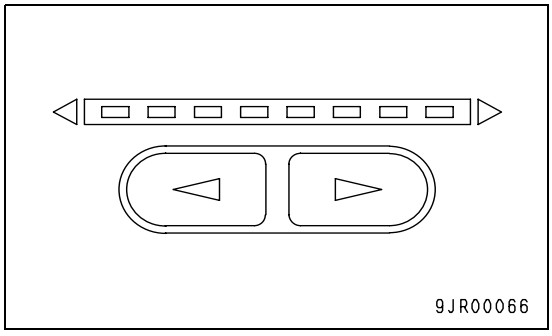

Set the vent mode selector switch to the intermediate position to give the desired condition.
With the FACE vents, it is possible to adjust the direction of the air flow and to turn it on or off.
However, do not set to the FACE mode with the vents closed.

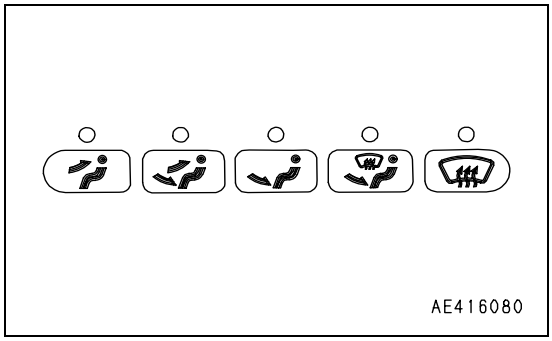

When not using the air conditioner regularly

Run the air conditioner at cooling or dehumidification + heating for several minutes from time to time to prevent the loss of the oil film at various parts of the compressor.

REMARK

If the temperature inside the cab is low, the air conditioner may not work. In such cases, use the recirculated air to heat up the inside of the cab, then turn the air conditioner switch on to run the air conditioner.

https://truckmanualshub.com/

Cool box

When the cooling is being used, this can be used for keeping drinks and other things cool.
When the heating is being used, it can be used to keep things warm.
When using the box, open the vent grill (1).
When not using the box, close the grill (1).
Do not use the cool box for things which smell or leak water or break easily.
Do not use it as a holder for tools or other small objects.

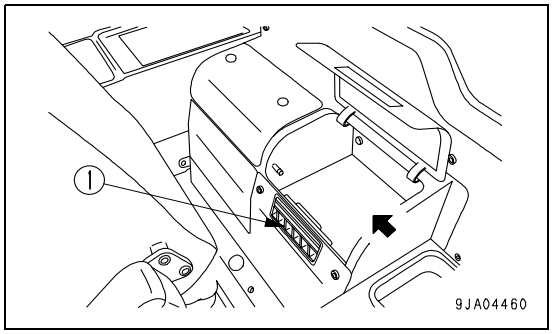

Precautions when using

Precautions when using the cooling

- If you smoke when using the air conditioner, your eyes may start to itch or burn, therefore ventilate the cab every so often to remove the smoke.
- When using the air conditioner for a long period of time, carry out ventilation process at least once every hour.
  When using the air conditioner, it is recommended for health reasons, that it should only feel slightly cooler (5 or 6°C lower than the outside temperature) when you enter the cab.
  Therefore, to adjust the temperature to a suitable level.

https://truckmanualshub.com/

Handling cab wiper

Preventing damage to wiper arm bracket

NOTICE
When angling the wiper arm (1) to the front, check that the wiper blade is hanging free.

When angling the wiper arm (1) to the front, such as when wiping the glass clean, if the wiper arm (1) is angled with the wiper blade (2) locked to the arm (the bottom of the blade is caught on the arm), abnormal force is brought to bear on the mounting bracket and the bracket may break.

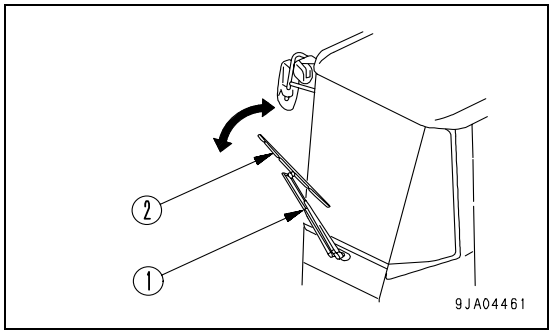

https://truckmanualshub.com/

Operation

Check before starting engine, adjust

Walk-around check

Before starting the engine, walk around the machine and look to the underside of chassis for anything unusual like looseness of the bolts and nuts, leakage of fuel, oil and cooling water. Also check the condition of the work equipment and the hydraulic system.
Check also for loose wiring, play, and collection of dust at places which reach high temperature.

WARNING

Remove any flammable materials from around the battery or engine muffler, turbocharger, or other high temperature engine parts. Leakage of fuel or oil will cause the machine to catch fire. Check carefully, and be sure to repair any abnormalities, or please contact your Komatsu distributor.

Always carry out the items in this section before starting the engine each day.

1. Check for damage, wear, play in work equipment, cylinders, linkage and hoses.
   Check that there are no cracks, excessive wear, or play in the work equipment, cylinders, linkage or hoses. If any abnormality is found, repair it.

2. Remove dirt and dust from around engine, battery and radiator.
   Check if there is any dirt or dust accumulated around the engine or radiator. Check also if there is any flammable material (dead leaves, twigs, etc.) accumulated around the battery or high temperature engine parts, such as the engine muffler or turbocharger. Remove all such dirt or flammable material.

3. Check for coolant or oil leakage around engine.
   Check that there is no oil leakage from the engine or coolant leakage from the cooling system. If any abnormality is found, repair it.

4. Check for oil leakage from HST piping, transfer case, axle, hydraulic tank, hoses and joints.
   Check that there is no oil leakage. If any abnormality is found, repair the leakage.

5. Check for oil leakage from brake line.
   Check that there is no oil leakage. If any abnormality is found, repair the leakage.

6. Check for damage or wear to tires and loose mounting bolts.
   Check for cracks or peeling of the tires and for cracks or wear to the wheels (side rim, rim base, lock ring). Tighten any loose wheel nuts. If any abnormality is found, repair or replace the part.
   If any valve caps are missing, install new caps.

7. Check for damage and loose bolts on handrail and steps.
   Repair any damage and tighten any loose bolts.

8. Check the fill level of the grease container of the central lubrication system (optional). Refill grease if required. On the display of the lubrication pump, check that there is no error message. For more information, see the chapter SPECIAL EQUIPMENT AND ATTACHMENTS"Operating the central lubrication system".
9. Check for loose air cleaner mounting bolts.
   Check for the loose bolts, and if loose, tighten up.

10. Check for loose battery terminals.
    Tighten any loose terminal.

https://truckmanualshub.com/

11. Check for damage to seat belt and mounting clamps.

REMARK
The date of manufacture of the seat belt is marked on the belt at the place indicated by the arrow in the diagram on the right.

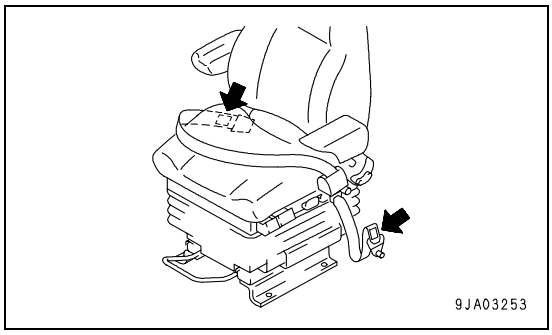

Check that there are no loose bolts on the equipment mounting the seat belt to the machine, and tighten if necessary.

Tightening torque: 24.5 ± 4.9 N·m (2.5 ± 0.5 kgf·m, 18.1 ± 3.6 lbft)

If the belt is damaged or fluff is starting to form, or if there is any damage or deformation of the seat belt holders, replace the seat belt.

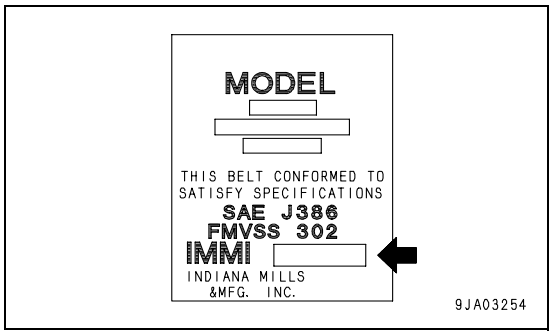

12. Clean cab window.
    Clean the cab window to ensure good visibility when operating the machine.

https://truckmanualshub.com/

13. Inspect tires.

WARNING

If worn or damaged tires are used, they may burst and cause serious injury or death.
To ensure safety, do not use the following tires.
Wear:
- **Tires with a tread groove of less than 15% of that of a new tire.**
- **Tires with extreme uneven wear or with stepped-type wear.**

Damage:
- **Tires with damage which has reached the cords, or with cracks in the rubber.**
- **Tires with cut or pulled cords.**
- **Tires with peeled (separated) surface.**
- **Tires with damaged bead.**
- **Leaking or improperly repaired tubeless tires.**
- **Deteriorated, deformed or abnormally damaged tires which do not seem usable.**

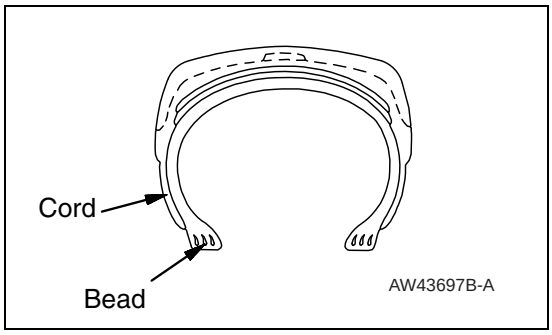

14. Inspect rims.

WARNING

Check the rims (wheels) and rings for deformation, corrosion and cracks.
In particular, check the side rings, lock rings and rim flanges thoroughly.

https://truckmanualshub.com/

Check before starting

Always carry out the items in this section before starting the engine each day.

Check oil level in engine oil pan, add oil

WARNING

The parts and oil are at high temperature immediately after the engine is stopped, and may cause serious burns. Wait for the temperature to go down before starting the operation.

1. Open the engine side cover on the right side of the chassis.
2. Take out the dipstick (G) and wipe off the oil with cloth.
3. Insert dipstick (G) fully in the oil filler pipe, then take it out again.
4. The oil level should be between the H and L marks on dipstick (G).
   If the oil level is below the L mark, add engine oil through oil filler (F).
5. If the oil is above the H line, open drain valve (P) at the bottom of the engine oil pan, drain the excess engine oil, then check the oil level again.
6. If the oil level is correct, tighten oil filler cap (F) securely and close the inspection window.

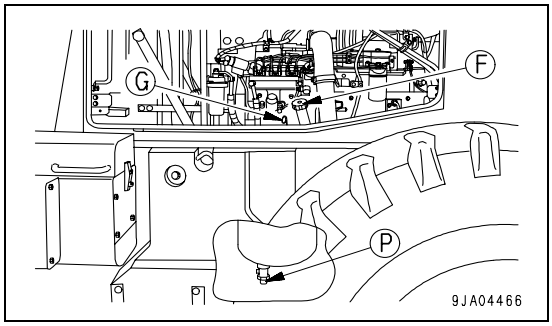

REMARK

- **When checking the oil level after the engine has been operated, wait for at least 15 minutes after stopping the engine before checking.**
- **If the machine is at an angle, make it horizontal before checking.**

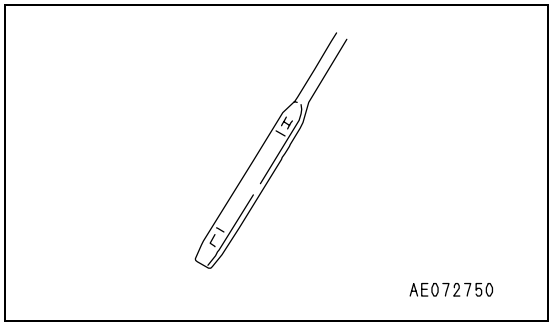

Check water separator

The water separator separates water mixed in the fuel. If float (2) goes above water drain line (2), drain the water as follows.

1. Loosen drain plug (3) and drain the accumulated water until the float (1) reaches the bottom.
2. Tighten drain plug (3).
3. If the air is sucked into fuel line when draining and water, be sure to bleed air in the same manner as for the fuel filter. See “Replace fuel filter cartridge on page 4-48“.

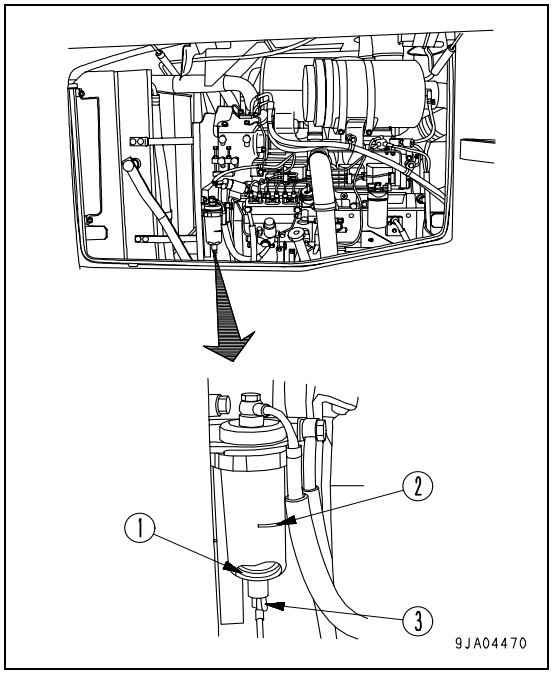

https://truckmanualshub.com/

Check dust indicator

1. Check that the red piston has not appeared in the transparent portion of dust indicator (1).
2. If the red piston has appeared, clean or replace the element immediately.
   For details of the method of cleaning the element, see “Check, clean, or replace air cleaner element on page 4-20“.
3. After checking, cleaning, and replacing, press the knob of dust indicator (1) to return the red piston to its original position.

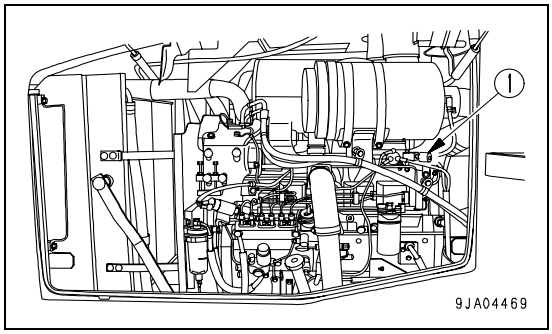

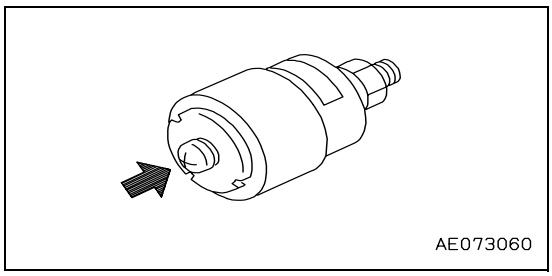

https://truckmanualshub.com/

Check coolant level, add coolant

WARNING

- **Do not open the radiator cap unless necessary. When checking the coolant, always wait for the engine to cool down and check the sub tank.**
- **Immediately after the engine is stopped, the coolant is at a high temperature and the radiator is under high internal pressure. If the cap is removed to check the coolant level in this condition, there is a hazard of burns. Wait for the temperature to go down, then turn the cap slowly to release the pressure before removing it.**

CAUTION

To top up coolant in the radiator, use a suitable climbing aid (for example a ladder) to climb up the back of the machine.

1. Open top cover (1) at the front of the engine hood.
2. Check that the coolant level is between the FULL and LOW marks on radiator sub-tank (2). If the coolant level is low, add coolant through the coolant filler of sub-tank (2) to the FULL level.
3. After adding coolant, tighten the cap securely.
4. If sub tank (3) is empty, check for coolant leakage, then check the coolant level in the radiator. If the coolant level is low, add coolant to the radiator, then add coolant to sub tank (3). To top up coolant in the radiator, use a suitable climbing aid (for example a ladder) to climb up the back of the machine.
   If the volume of coolant added is more than usual, check for possible leakage.
   Confirm that there is no oil in the coolant.

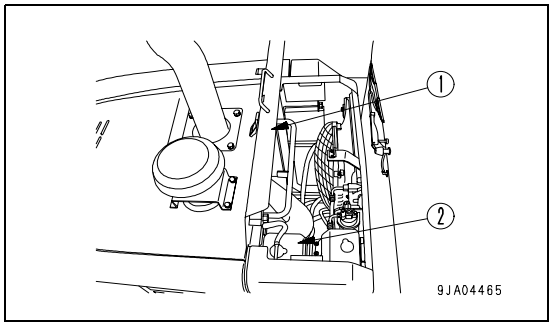

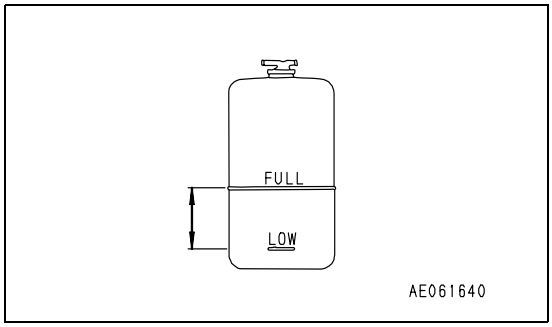

Check inflation pressure of tires

Measure the inflation pressure with a tire pressure gauge while the tires are cool before starting work.
Check for damage or wear to the tires and the rims. Check for loose wheel hub nuts (bolts).
The appropriate inflation pressure differs according to the type of work, so see section “Handling the tires on page 3-96“ for details.

https://truckmanualshub.com/

Check electric wiring

CAUTION

- **If fuses are frequently blown or if there are traces of short-circuiting on the electrical wiring, promptly ask your Komatsu distributor to locate the cause and make the repair.**
- **Keep the top surface of the battery clean and check the breather hole in the battery cap. If it is clogged with dirt or dust, wash the battery cap to clear the breather hole.**

Check for damage and wrong capacity of the fuse and any sign of disconnection or short circuit in the electric wiring. Check also for loose terminals and tighten any loose parts.
Particularly, check the wiring of the “battery“, “starting motor“ and “alternator“ carefully.
When carrying out checks around the battery, always check if there is any accumulation of flammable material around the battery, and remove such flammable material.
Please contact your Komatsu distributor for investigation and correction of the cause.

Check monitor panel

1. Turn the starting switch to the ON position.

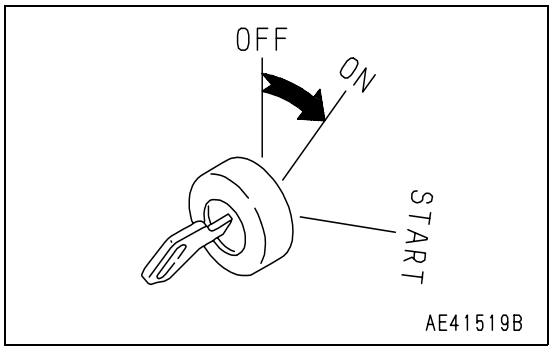

2. Check that all the monitors, gauges, and the central warning lamp light up for approx. 3 seconds and the alarm buzzer sounds for approx. 1 sec.
   If the lamps do not light up, there is probably a failure or disconnection, so contact your Komatsu distributor for inspection.

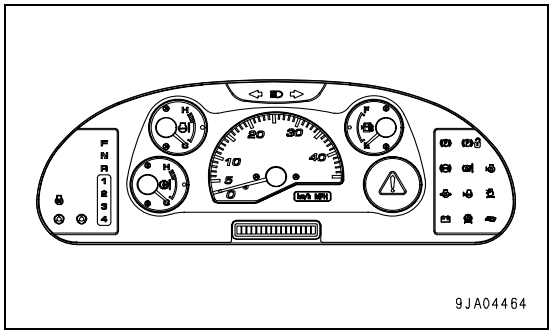

https://truckmanualshub.com/

Check fuel level, add fuel

⚠ WARNING

When adding fuel, never let the fuel overflow. This may cause a fire. If any fuel is spilled, wipe it up completely. Never bring flames near fuel because it is highly flammable and dangerous.

NOTICE
If the engine has run out of fuel and has stopped, it is necessary to operate the priming pump to bleed the air completely from the fuel line before starting the engine again.
Take care not to let the engine stop because of lack of fuel.
If the engine has run out of fuel, the air bleeding operation can be carried out more quickly if the fuel tank is completely filled with fuel.

1. Turn the engine starting switch to the ON position and check the fuel level with fuel level gauge (G).
   After checking, turn the switch back to the OFF position.

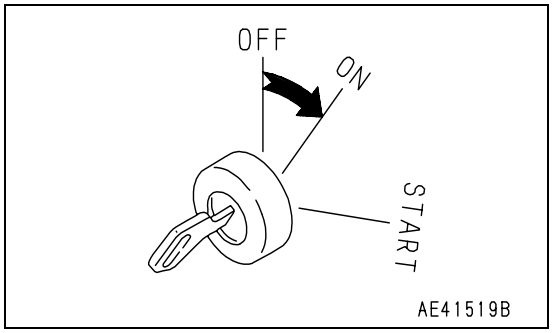

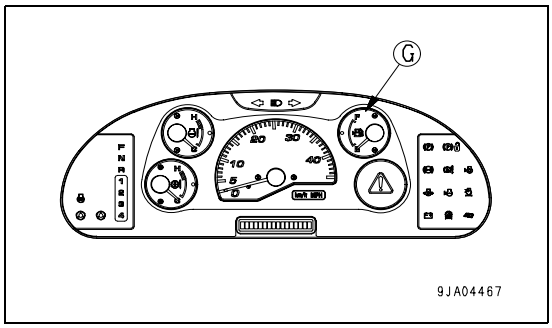

2. If the level is low, open rear grill (1) and add through filler port (F) to fill the tank.
   For details of the method for opening and closing the cap, see “Method of opening and closing cap with lock on page 3-42“.
3. After adding fuel, tighten the cap securely.
   Fuel tank capacity: 184 liters (48.61 US gal)

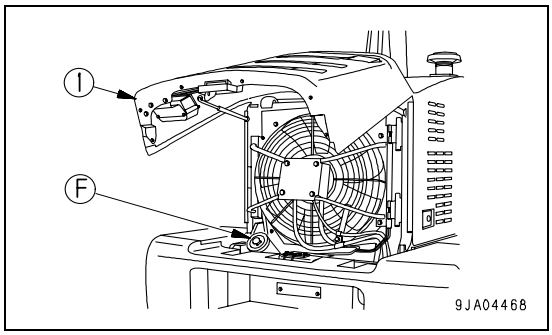

Check parking brake

Check that the parking brake works properly.
If there is any abnormality in the operation of the parking brake or the brake does not provide the proper braking effect, please contact your Komatsu distributor for adjustment.

Check brake pedal

Drive the machine forward and check the effect of the brakes.
If there is any abnormality in the actuation of the brakes, please contact your Komatsu distributor to have the brakes adjusted.

https://truckmanualshub.com/

Adjustment

Seat adjustment

WARNING

When adjusting the position of the operator's seat, always set the safety lock lever to the LOCK position to prevent any accidental contact to the control levers.

- Always adjust the operator's seat before starting each operation or when the operators change shift.
- When adjusting the seat, put your back against the backrest and adjust to a position where the brake pedal can be fully depressed.

NOTICE

- **When pulling up levers (2) and (3), be careful not to pull up the switch box at the front by mistake. There is danger that the switch box may be damaged.**
- **When the left armrest is at the raised position, do not push down on the tip of the armrest with your hand to support your weight. There is danger that the armrest mount may be damaged.**

Adjustments (E), (J), and (K) use the air compressor built into the seat, so turn the engine starting switch to the ON position when carrying out the adjustment.

(A) Fore-and-aft adjustment
Pull lever (1) up, set the seat to the desired position, then release the lever.
Amount of adjustment: 180 mm (7.1 in)
(10 mm (0.4 in) x 18 stages)

(B) Adjusting seat angle
Move lever (2) up and apply your weight to the rear of the seat. The seat will tilt to the rear.
Move lever (3) up and apply your weight to the front of the seat. The seat will tilt to the front.
Amount of adjustment: 24 degrees (front and rear tilt: 3 stages each)

(C) Adjusting height of seat
Move levers (2) and (3) up and move the seat up or down to the desired position.
These levers are also used for adjusting the seat angle, so adjust the seat angle to set the seat to the desired height.
Amount of adjustment: 65 mm (2.6 in)

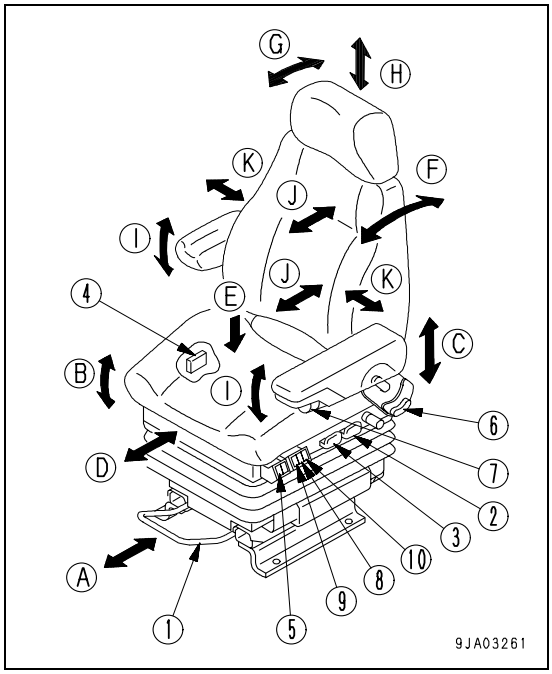

(D) Adjusting fore-and-aft position of seat cushion
Push in lever (4), set the seat cushion to the desired position, then release the lever.
Amount of adjustment: 60 mm (2.4 in)

(E) Setting seat for weight
Sit on the seat, raise your body slightly, then operate switch (5) to adjust the strength of the suspension.
Amount of adjustment: 50 - 130 kg (110 - 287 lb)(target)
When + is pressed: Suspension becomes stronger
When - is pressed: Suspension becomes weaker

(F) Adjusting reclining angle
Move lever (6) up and move the backrest to the front or rear.
Push your back against the backrest when carrying out this adjustment. If your back is not pressing against the backrest, the backrest may suddenly spring forward.
Amount of adjustment: Front tilt: Free

https://truckmanualshub.com/

Rear tilt: 40 degrees (2 degrees x 20 stages)

(G) Adjusting headrest angle (option)
Rotate the headrest to the front or rear.
Amount of adjustment:
Front tilt: 13 degrees
Rear tilt: 13 degrees

(H) Adjusting headrest height (option)
Move the head rest up or down.
Amount of adjustment: 80 mm (3.2 in)

(I) Adjusting armrest angle
Rotate the knob (7) and adjust the angle of the arm rest. (Left side only)
Amount of adjustment: 73 degrees (front: 54 degrees; rear: 19 degrees)
If the arm rest is turned, it will spring up. (Both left and right sides)

(J) Lumbar support
Operate switch (8) to give a suitable tension to the lower lumbar region.
Operate switch (9) to give a suitable tension to the upper lumbar region.
When + is pressed: Tension becomes stronger
When - is pressed: Tension becomes weaker

(K) Side support
Operate switch (10) to give a suitable tension to the left and right lumbar region.
When + is pressed: Tension becomes stronger
When - is pressed: Tension becomes weaker

Removal and installation of headrest

Removal

If the headrest is not needed, remove it as follows.

1. Pull up the headrest to the position where it stops.
2. From the top of the seat back, turn stopper (1) (under the material at the top of the seat) of the headrest bar on one side in the direction of the arrow, and pull up the headrest.
   When stopper (1) is turned, it will come out of groove (2).
3. Turn stopper (1) on the other side in the direction of the arrow, and pull up the headrest.
   When both stoppers (1) come out of groove (2), the headrest can be removed.

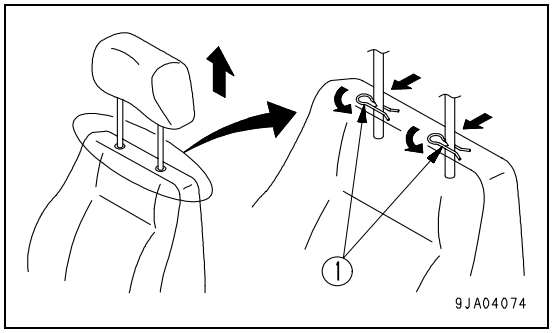

Installation

1. Insert the bars into the holes in the top of the seat and push down.

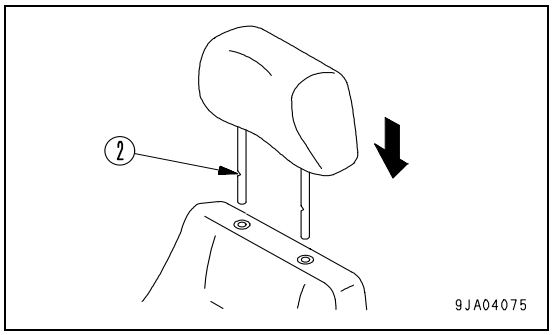

https://truckmanualshub.com/

Adjust seat belt

Always wear the seat belt.

WARNING

- **Before fastening the seat belt, check that there is no abnormality in the belt mounting bracket or mounting belt. If the belt is worn or damaged, replace it.**
- **Fasten the seat belt before starting operations.**
- **Always wear the seat belt during operations.**

Fastening and removing belt

1. Sit on the seat, hold buckle (2) and tongue (3) with your left and right hands, insert tongue (3) into buckle (2), then pull the belt to check that it is securely locked.
2. When removing the belt, press the red button in buckle (2) to free the belt.
   Fasten belt along your body without kinking it.

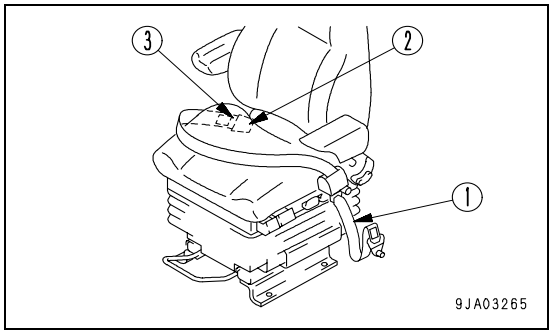

https://truckmanualshub.com/

Adjust lever stand

Adjust height of wrist rest

Loosen lock lever (2) and adjust the height of wrist rest (1).
Amount of adjustment: 60 mm (2.4 in)

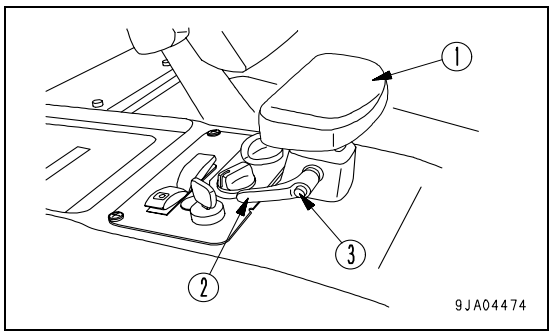

REMARK
Keep button (3) pressed and operate lock lever (2) to the FREE position. The lever can be turned in the desired direction.

Adjust rear view mirror

Sit in the operator's seat and adjust the rear view mirror so that you can see properly to the rear.

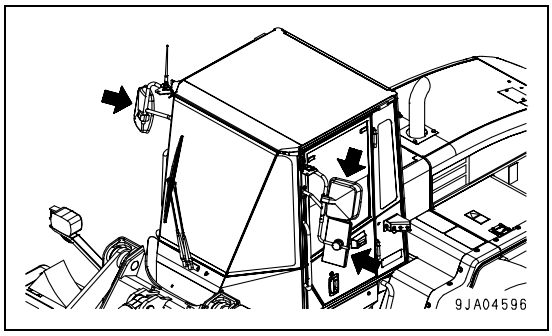

https://truckmanualshub.com/

Operations and checks before starting engine

WARNING

Before starting the engine, check that the safety lock lever is securely at the LOCK position.
If the work equipment control lever is touched by accident when starting the engine, the work equipment may move unexpectedly and cause serious damage or personal injury.

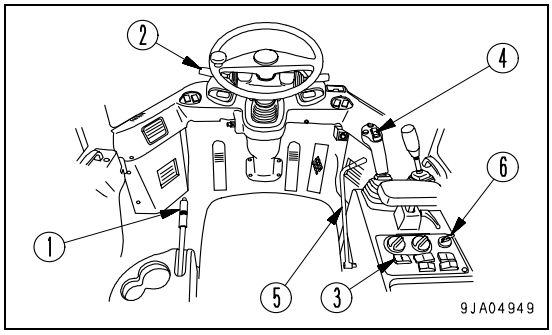

1. Check that parking brake lever (1) is at the LOCK position.

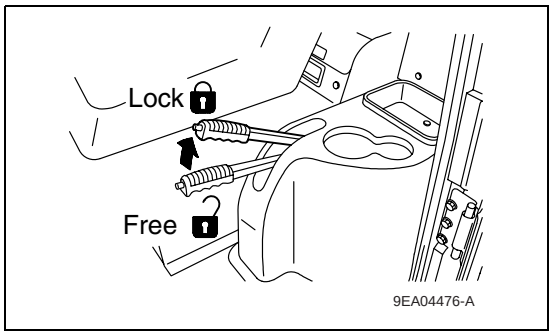

2. Check that directional lever (2) is at the N position.

REMARK
- **If directional lever (2) is not set to the N position, the engine will not start.**
- **When directional selector switch actuation switch (3) is ON, the engine will not start if directional lever (2) and directional selector switch (4) are not both at the N position.**

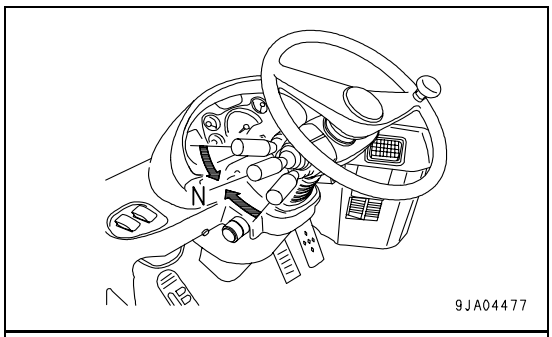

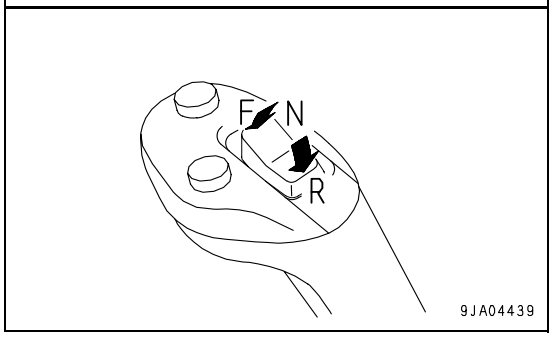

3. Check that the bucket is completely lowered to the ground. If it is not completely lowered, lower the bucket to the ground as follows.
   1) Set the safety lock lever to the FREE position.
   2) Operate the work equipment control lever to lower the bucket to the ground.
   3) Set the safety lock lever to the LOCK position.

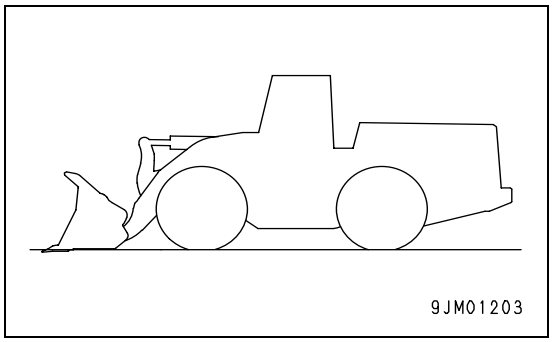

https://truckmanualshub.com/

4. Check that safety lock lever (5) is at the LOCK position.

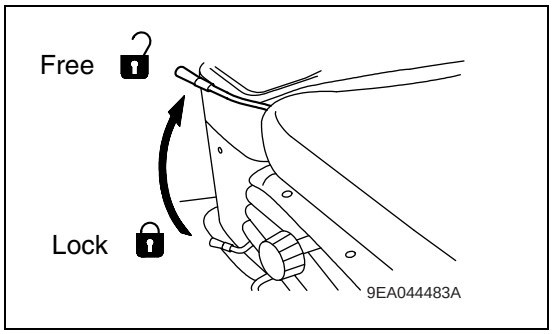

5. Insert the key in starting switch (6), turn the key to the ON position, and check that the machine monitor system works.

   When the starting switch is turned to the ON position before starting the engine, monitors, gauges, and central warning lamp light up for approx. 3 seconds, and the alarm buzzer sounds for approx. 1 sec.
   If any monitor does not light up, there is probably a failure or disconnection, so contact your Komatsu distributor for inspection.

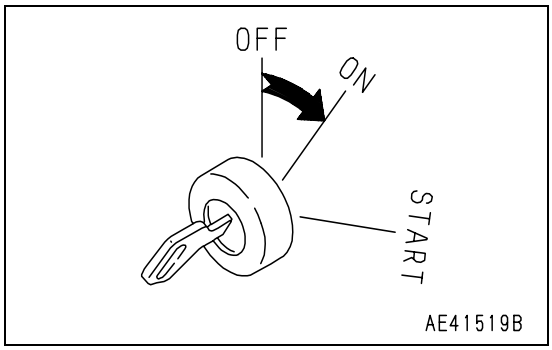

https://truckmanualshub.com/

Starting engine

⚠ WARNING

- **Start the engine only after sitting down in the operator's seat.**
- **Do not attempt to start the engine by short-circuiting the engine starting circuit. Such an act may cause serious bodily injury or fire.**
- **Check that there are no persons or obstacles in the surrounding area, then sound the horn and start the engine.**
- **Exhaust gas is toxic. When starting the engine in confined spaces, be particularly careful to ensure good ventilation.**

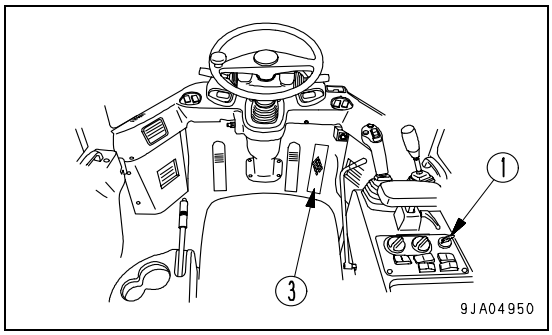

NOTICE

- **Do not start the engine with the accelerator pedal fully depressed. There is danger that the engine parts may be damaged.**
- **Do not keep the starting motor rotating continuously for more than 20 seconds.**
- **If the engine does not start, wait for at least 2 minutes before trying to start the engine again.**

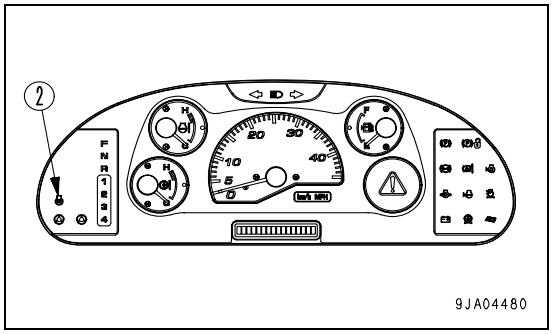

1. Turn the key of starting switch (1) to the ON position. The automatic preheating will start and the preheating pilot lamp (2) will light up.

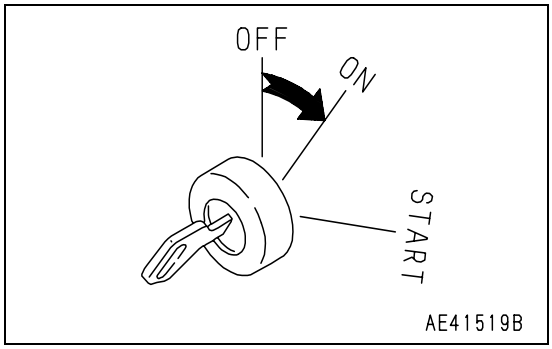

- In the case of machines with immobiliser (optional), the chip (4) that is connected to the ignition key (1) with a chain must be resting on the plastic panelling under the arm rest when starting the ignition. If this is not the case, the engine will not start.

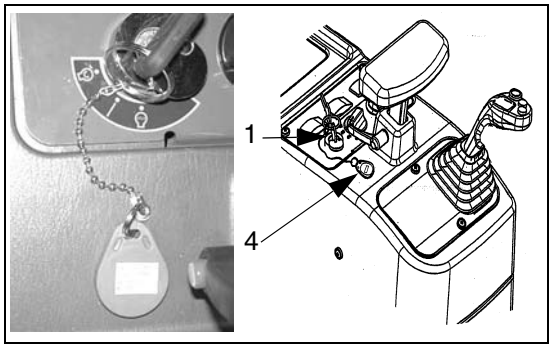

https://truckmanualshub.com/

The preheating time varies according to the engine water temperature when the engine is started.

The table on the right gives a guide to the preheating time (sec) in cold weather.
X: Water temperature when starting the engine (°C)
Y: Preheating time (sec)

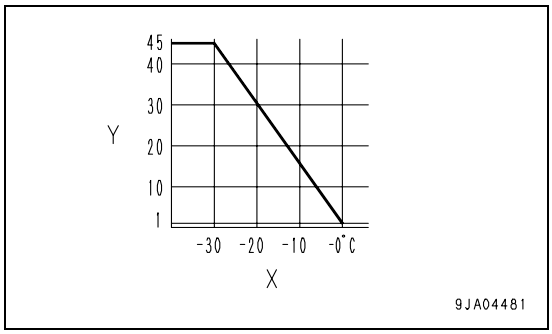

2. Depress accelerator pedal (3) lightly.

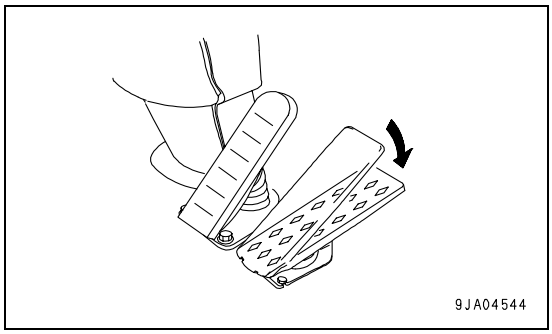

3. After the preheating pilot lamp (2) goes out, turn the key of starting switch (1) to the START position to start the engine.

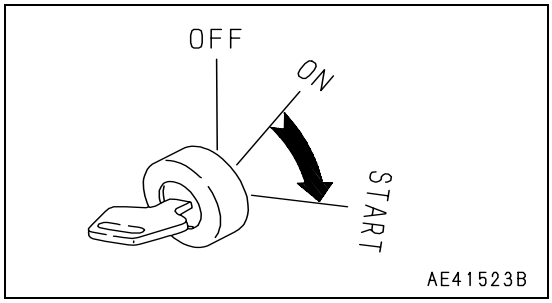

4. After the engine starts, release the key in starting switch (1). The key will automatically return to the ON position.

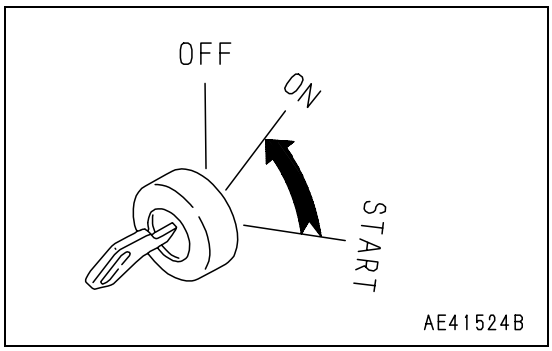

https://truckmanualshub.com/

Operations and checks after starting engine

WARNING

- **Emergency stop**
- **If the operation is abnormal or any other trouble occurs, turn the key in the starting switch to the OFF position.**
- **If the work equipment is operated without warming up the machine sufficiently, the response of the work equipment to the movement of the control lever will be slow, and the work equipment may not move as the operator desires, so always carry out the warming-up operation. Particularly in cold areas, be sure to carry out the warming-up operation fully.**

Breaking-in the machine

CAUTION

Your Komatsu machine has been thoroughly adjusted and tested before shipment. However, operating the machine under severe conditions at the beginning can adversely affect the performance and shorten the machine life.
Be sure to break-in the machine for the initial 100 hours (as indicated by the service meter).
During breaking-in operations, follow the precautions described in this manual.

- Idle the engine for 5 minutes after starting it up.
- Avoid operation with heavy loads or at high speeds.
- Immediately after starting the engine, avoid sudden starts, sudden acceleration, unnecessary sudden stops, and sudden changes in direction.

Normal operation

After starting the engine, do not immediately start operations. First, carry out the following operations and checks.

NOTICE
Do not suddenly accelerate the engine before the warming-up operation is completed.
Do not run the engine at low idling or high idling continuously for more than 20 minutes.
If it is necessary to run the engine at idling, apply a load from time to time or run the engine at a mid-range speed.

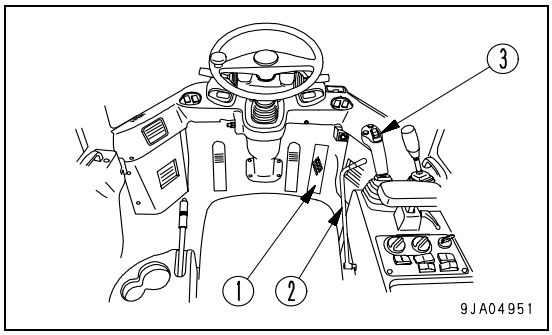

1. Depress accelerator pedal (1) lightly and run the engine with no load at midrange speed for about 5 minutes.

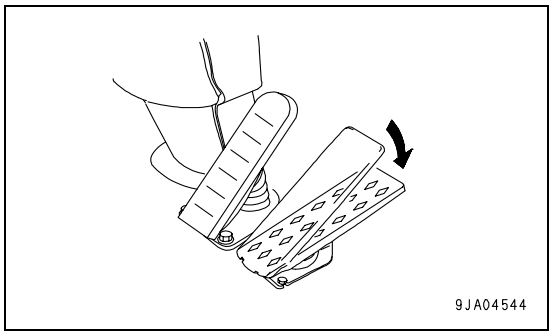

https://truckmanualshub.com/

To warm up the hydraulic oil in cold areas, do as follows.

2. During the warming-up operation, check that the engine rotation is smooth, then set the safety lock lever (2) to the FREE position.

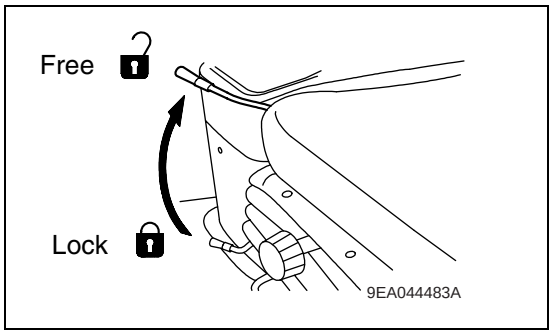

3. Operate work equipment control lever (3) to TILT position (e) and return it to HOLD position (b) to warm up the hydraulic oil.
   The relief time at the tilt position (e) should be a maximum of 10 seconds.
   With this operation, the oil will reach the relief pressure and this will warm up the hydraulic oil more quickly.

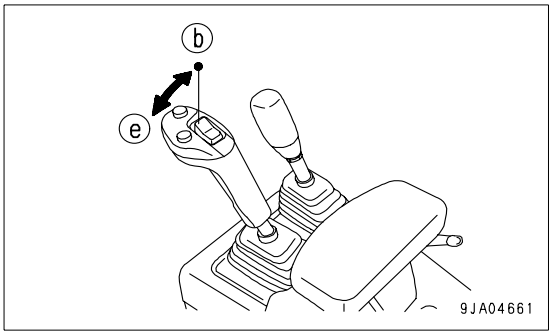

4. After carrying out the warming-up operation, check that the gauges and pilot lamps are normal.
   If there is any abnormality, carry out maintenance or repair.
   Run the engine under a light load until engine cooling water temperature gauge (4) and HST oil temperature gauge (5) are in the white range.
5. Check that there is no abnormal exhaust gas color, noise or vibration. If any abnormality is found, contact your Komatsu distributor.

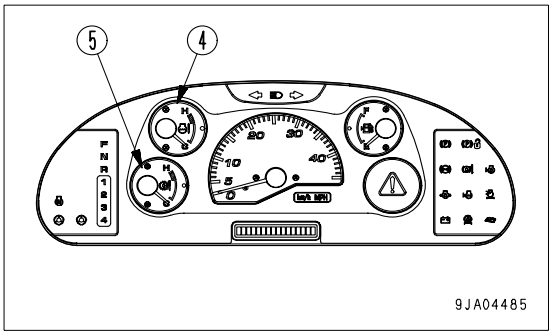

https://truckmanualshub.com/

Stopping engine

NOTICE
If the engine is abruptly stopped before it has cooled down, engine life may be greatly shortened. Consequently, do not abruptly stop the engine except for an emergency.
In particular, if the engine has overheated, do not abruptly stop it but run it at medium speed to allow it to cool gradually, then stop it.

1. Run the engine at low idling for about 5 minutes to cool down gradually.
2. Turn the key of starting switch (1) to the OFF position to stop the engine.
3. Remove the key from starting switch (1).

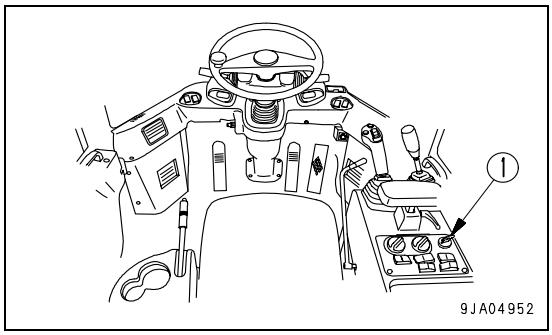

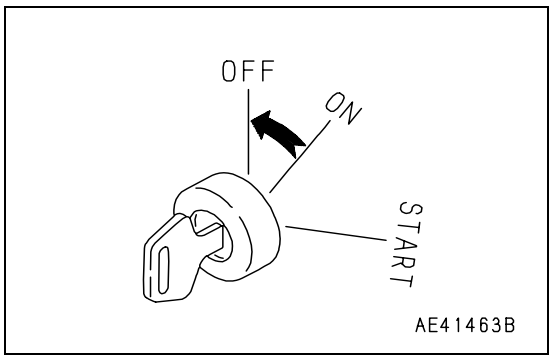

https://truckmanualshub.com/

Moving the machine (Directional, speed), stopping the machine

WARNING

- **Always remove the safety bar for travel operations. If it is not removed, the steering wheel cannot be used for steering, and this may lead to serious damage or injury.**
- **When moving the machine, check that the area around the machine is safe, then sound the horn before starting.**
- **Do not allow people to get near the machine.**
- **Clear the machine's travel path of any obstacle.**
- **Pay particular attention to the blind spot at the rear of the machine when traveling in reverse.**

Moving the machine

1. Check that caution lamp (1) is not lighted up.

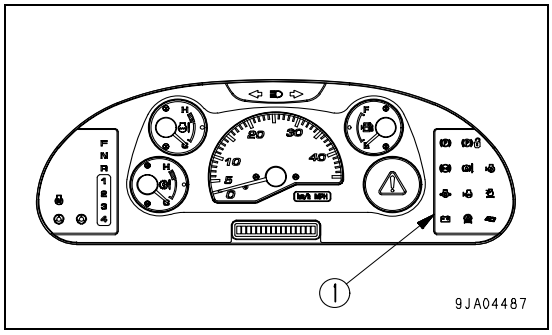

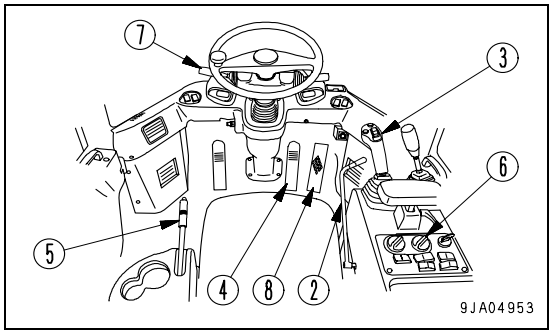

2. Set the safety lock lever (2) to the FREE position.

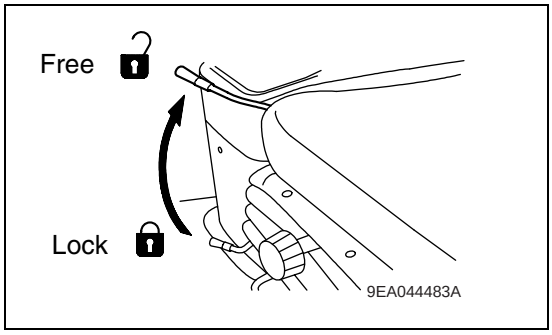

3. Operate work equipment control lever (3) to set the work equipment to the travel posture shown in the diagram on the right.

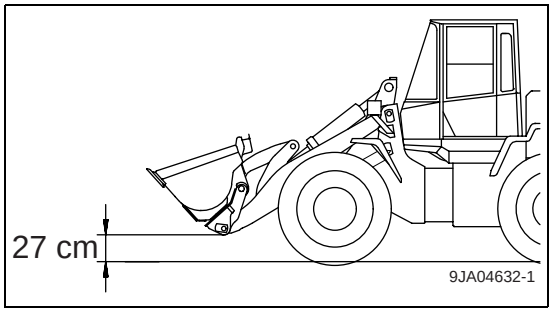

https://truckmanualshub.com/

4. Depress brake pedal (4) and turn parking brake lever (5) to the FREE position to release the parking brake.
   Keep brake pedal (4) depressed.

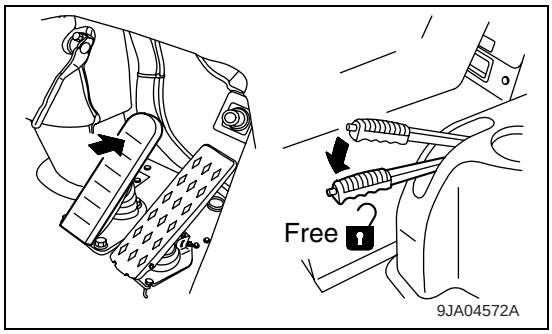

5. Set speed range selector switch (6) to the desired position.
   Position (a): 1st
   Position (b): 2nd
   Position (c): 3rd
   Position (d): 4th

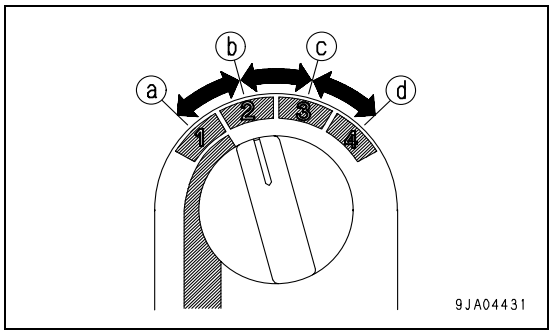

6. Set directional lever (7) to the desired position.
   Position (a): FORWARD
   Position N: NEUTRAL
   Position (b): REVERSE

   - Check that the backup alarm sounds when the directional lever is set to REVERSE. If the backup alarm does not sound, please contact your Komatsu distributor for repairs.

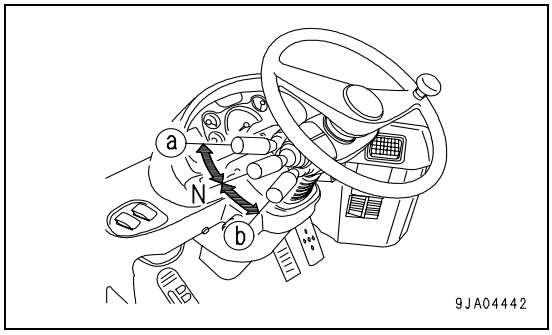

7. Release brake pedal (4), then depress accelerator pedal (8) to move the machine.

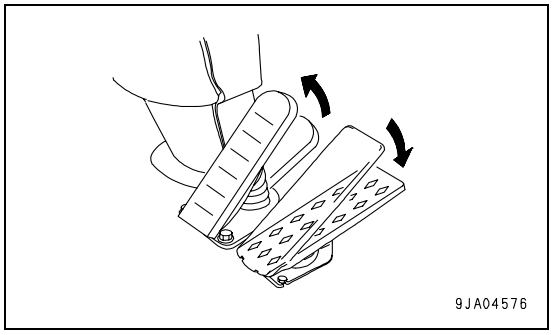

https://truckmanualshub.com/

Changing direction

WARNING

- **When changing direction between FORWARD and REVERSE, check that the new direction of travel is safe. There is a blind spot behind the machine, so be particularly careful when changing direction to travel in reverse.**
- **Do not switch between FORWARD and REVERSE when traveling at high speed.**
- **When switching between FORWARD and REVERSE, depress the brake to reduce the travel speed sufficiently, then change the direction of travel. (Max.speed for changing direction: 13 km/h (8.1 MPH))**

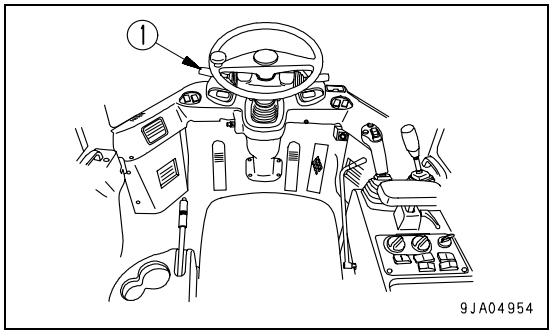

There is no need to stop the machine even when switching between FORWARD and REVERSE.
Place directional lever (1) in the desired position.
Position (a): FORWARD
Position N: NEUTRAL
Position (b): REVERSE

- Check that the backup alarm sounds when the directional lever is set to REVERSE. If the backup alarm does not sound, please contact your Komatsu distributor for repairs.

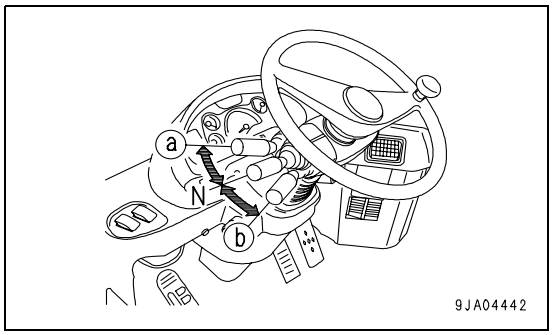

https://truckmanualshub.com/

Using switch to change between forward and reverse

WARNING

When the directional selector switch actuation switch (3) is at the ON position, if the directional lever (1) is operated to FORWARD or REVERSE, the machine will travel in forward or reverse according to the operation of the directional lever, regardless of the position of the directional selector switch (2).
Priority is given to the operation of the directional lever, so be careful when operating.

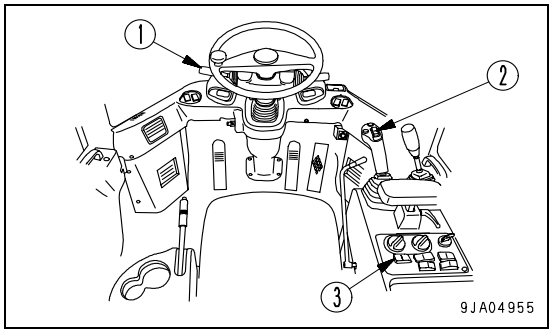

1. Place the directional lever (1) at the N position.

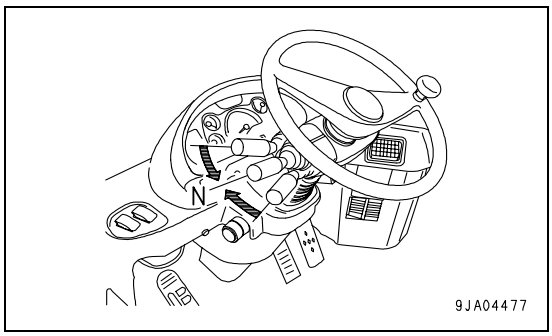

2. Place the directional selector switch (2) at the N position.

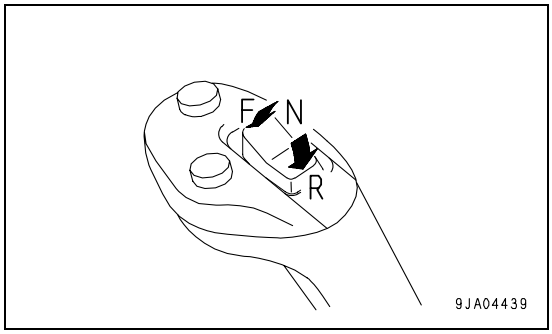

3. Place the directional selector switch actuation switch (3) at the ON position (a).

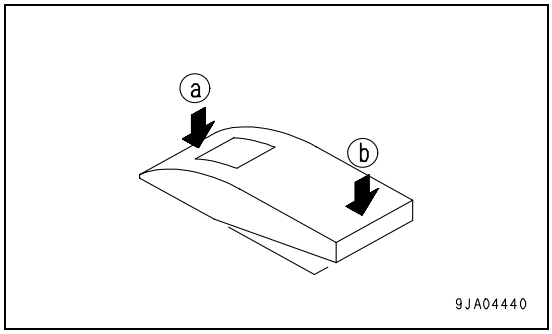

4. Place the directional selector switch (2) at the F (forward) or R (reverse) position.

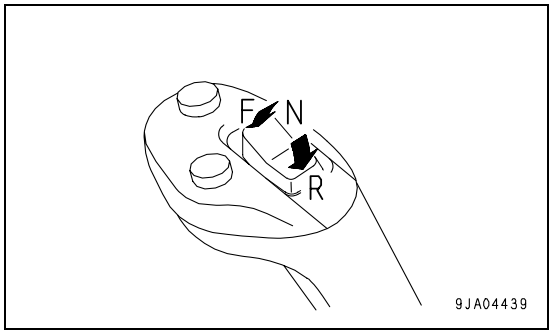

https://truckmanualshub.com/

REMARK

When the directional selector switch actuation switch (3) is at the ON position, if the directional lever (1) is operated to FORWARD or REVERSE, the machine will travel in forward or reverse according to the operation of the directional lever, regardless of the position of the directional selector switch (2).
Priority is given to the operation of the directional lever.
When using directional selector switch (2) again, set directional lever (1) and directional selector switch (2) to the N position.

https://truckmanualshub.com/

Stopping the machine

WARNING

- **Avoid stopping suddenly. Give yourself ample room when stopping.**
- **Even if the parking brake lever is pulled and set to the LOCK position, there is a danger of the machine moving until the parking brake pilot lamp lights up, so keep the brake pedal depressed.**

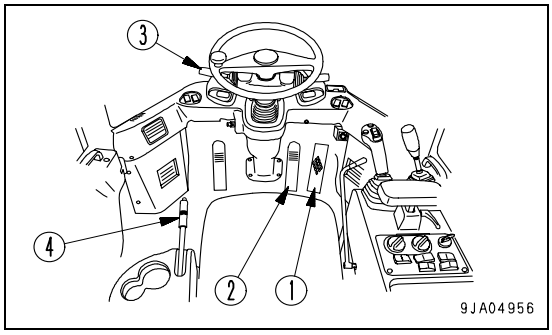

NOTICE
Never use the parking brake lever to brake the machine when traveling except in an emergency. Apply the parking brake only after the machine has stopped.

1. Release accelerator pedal (1), then depress brake pedal (2) to stop the machine.

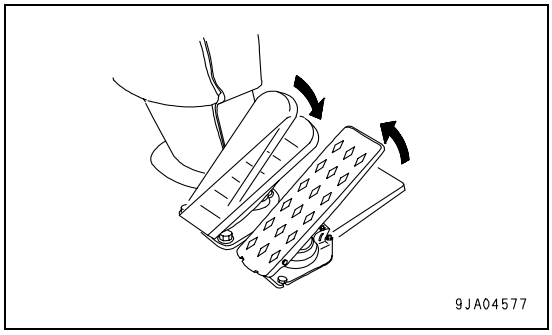

2. Place directional lever (3) in N (neutral) position.

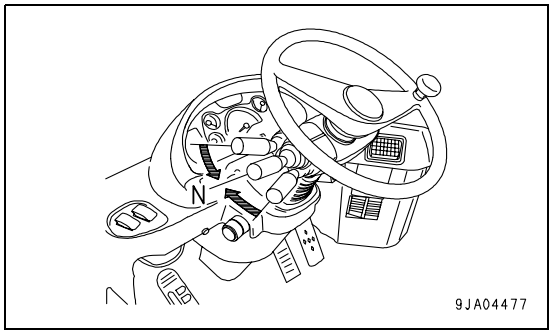

3. Pull parking brake lever (4) and set it to the LOCK position to apply the parking brake.

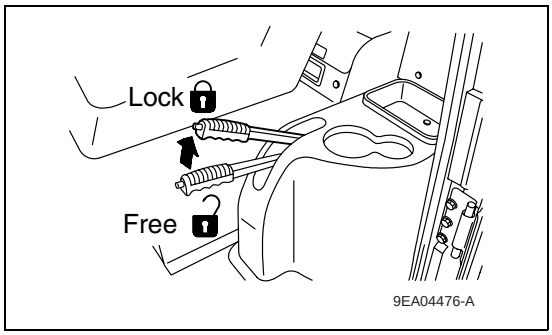

https://truckmanualshub.com/

Turning

WARNING

- **Operating the steering wheel suddenly at high speed or operating the steering wheel on steep slopes is dangerous. Do not operate the steering wheel in such situations.**
- **If the engine stops when the machine is traveling, the steering becomes heavy, so never stop the engine while traveling.**

It is particularly dangerous if the engine stops when the machine is traveling on slopes, so never let the engine stop when traveling on slopes.

- **If the engine stops, stop the machine immediately at a safe place.**

When traveling, use steering wheel (1) to turn the machine.
With this machine, the front frame is joined to the rear frame at the center of the machine by the center pin. The front and rear frames bend at this point, and the rear wheels follow in the same track as the front wheels when turning.
Turn the steering wheel lightly to follow the machine as it turns.

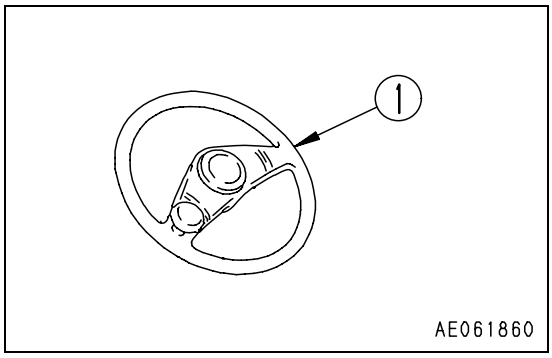

NOTICE
When the steering wheel is turned fully, if it reaches the end of its stroke, do not try to turn it further.
Check that there is a play of 50 to 100 mm (2.0 to 3.9 in) in the steering wheel. Check also that the steering works properly. If any abnormality is found, please contact your Komatsu distributor for inspection.

Emergency steering

CAUTION

Never actuate the emergency steering except during emergencies or when checking the function.

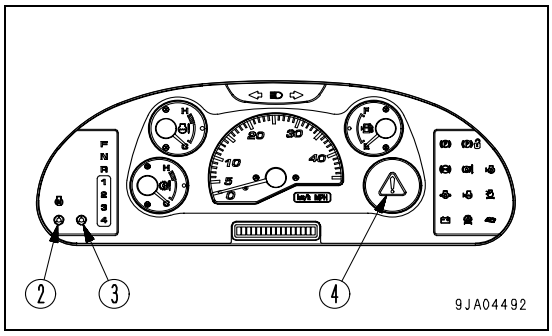

Emergency steering pilot lamp (green) (2) lights up to inform the operator that the emergency steering system is normal.

The emergency steering system is provided to enable the machine to be steered under the following conditions.

- The steering oil pressure is low or there is no pressure.
  (When the engine has stopped or there is a failure in the steering oil pressure pump, etc.)

When the emergency steering system detects lack of oil pressure in the steering system, steering oil pressure caution lamp (red) (3) and central warning lamp (4) light up, and the alarm buzzer sounds intermittently.
Steering oil pressure caution lamp (red) (3) lights up to inform the operator that there is a failure in the steering system.
If steering oil pressure caution lamp (red) (3) lights up, move the machine immediately to a safe place and stop it.
Locate the cause and do not operate the machine until it has been repaired.

REMARK
If any function of the oil pressure system is used when the engine is running at low speed, steering oil pressure caution lamp (red) (3) may light up for a moment, but if the lamp goes out again soon, there is no problem.

When the emergency steering system detects that the oil pressure in the steering circuit has been restored, the actuation of the emergency steering system is stopped.

https://truckmanualshub.com/

Operation of work equipment

Work equipment control lever (1) can be used to operate the lift arm and bucket as follows.

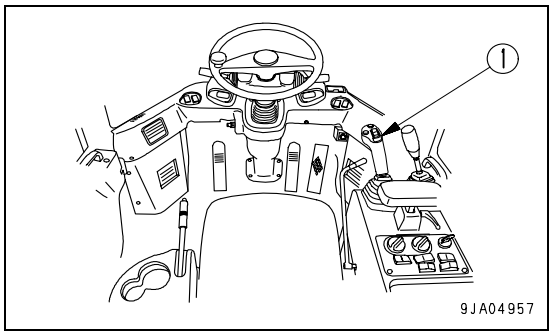

Lift arm operation

NOTICE
Do not use the FLOAT position when lowering the bucket. Use the FLOAT position when leveling, see "Leveling operations on page 3-86".

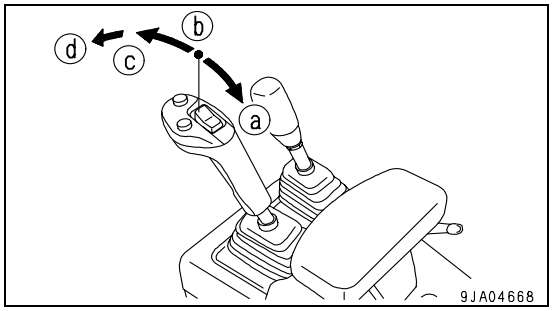

Position (a): RAISE
When the work equipment control lever is pulled further from the RAISE position, the lever is stopped in this position until the lift arm reaches the preset position of the kickout, and the lever is returned to the HOLD position.
Position (b): HOLD
The lift arm is kept in the same position.
Position (c): LOWER
Position (d): FLOAT
The lift arm moves freely under external force.

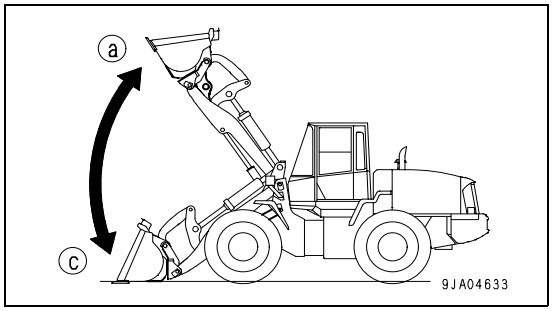

Bucket operation

Position (e): TILT
When the work equipment control lever is pulled further from the TILT position, the lever is stopped in this position until the bucket reaches the preset position of the positioner, and the lever is returned to the HOLD position.
Position (b): HOLD
The bucket is kept in the same position.
Position (f): DUMP

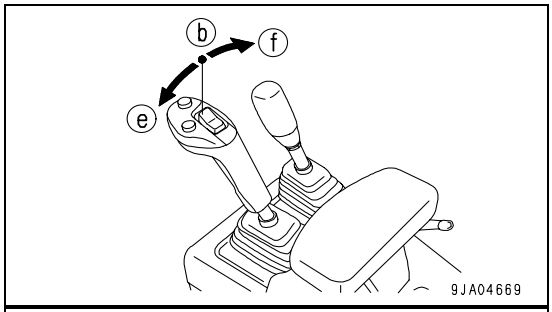

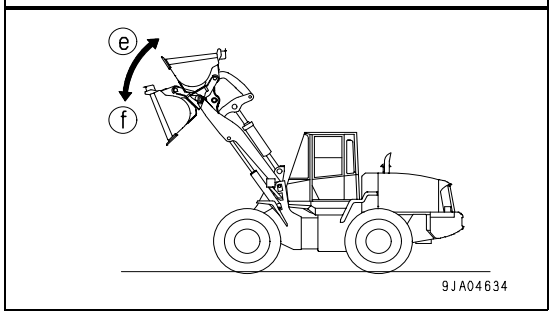

https://truckmanualshub.com/

Handling hydraulic quick coupler

Installing the attachment

1. Set the selector levers (1) into position “A“.
   Start the engine.

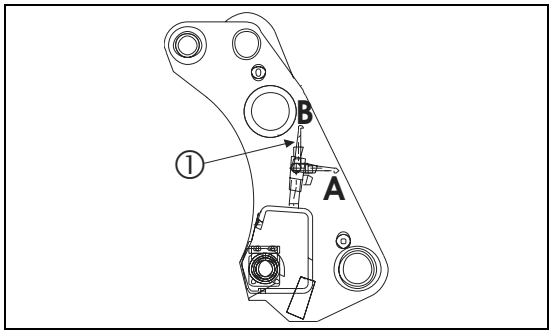

2. To remove the pins, push the control lever (2) forward.

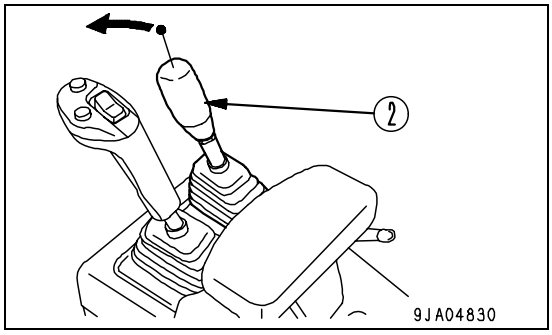

3. Check that the lock pins has been removed.
   The lock pin indicators (3) may not be visible.
4. Check that the selector control levers (1) are in horizontal position.

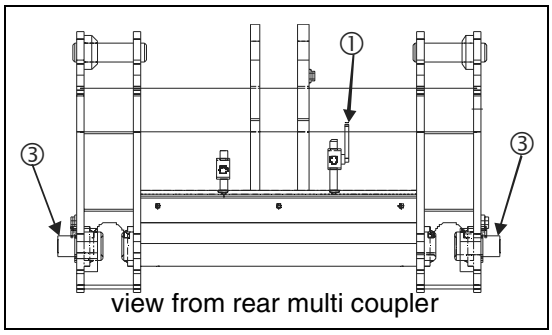

5. Adjust so that height H of the beem hinge pin is approx. 350mm, then move the machine so that the coupler is parallel with and at the center of the attachment to be installed.

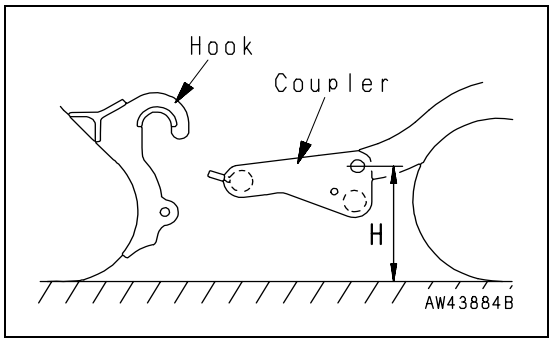

https://truckmanualshub.com/

6. Drive the machine slowly forward until the guide plate enters the inside of the hook of the attachment.
7. Tilt the coupler fuily while driving the machine forward.

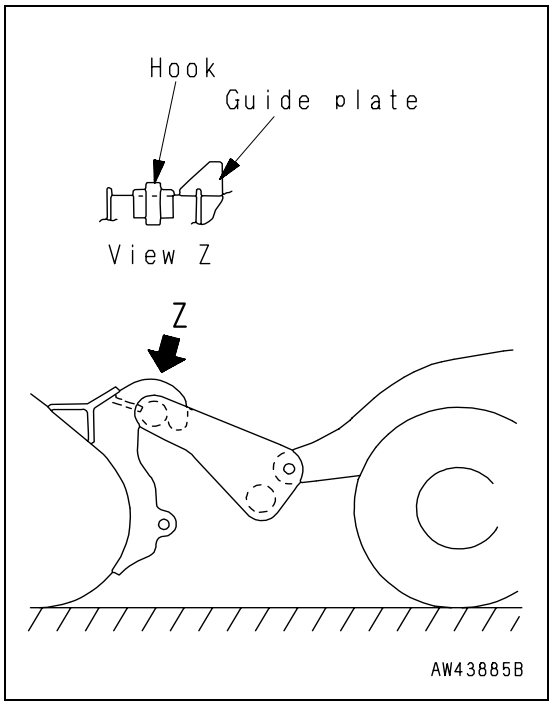

8. Operate the control lever for the coupler (2) backwards, to insent lock pins and lock the attachment in position.

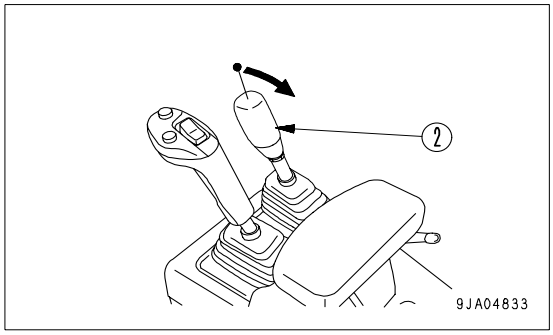

9. Check that the lock pin indicators on left and right side are visuable has been insert.

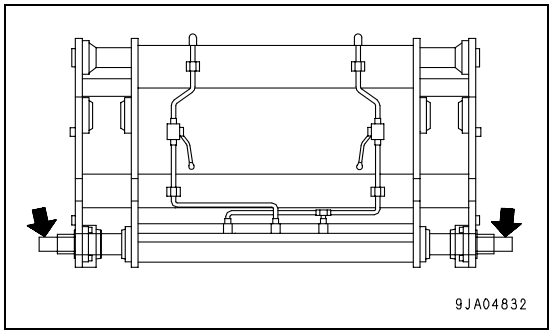

10. Protrusion (X) on left and right side 30mm.

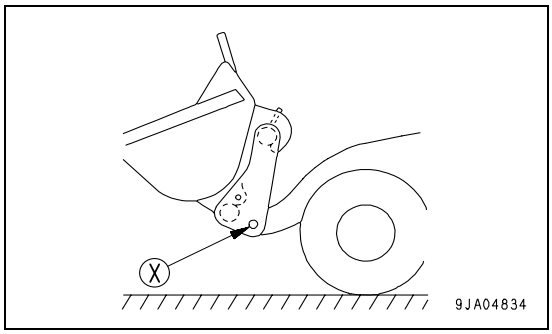

https://truckmanualshub.com/

11. After completing the connection of the front attachment set the two control levers up to position “B“.

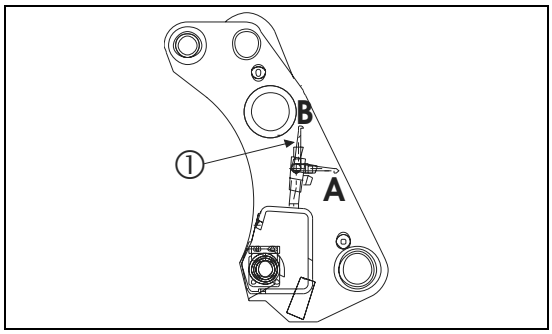

Removal and installation of the attachment

WARNING

The hydraulic system is always under internal pressure. When replacing and installing the coupling, release the pressure inside the circuit. If the circuit is still under the pressure, high-pressure oil will spurt out and lead to serious injury.

1. Lower the work equipment to the ground, stop the engine, then operate the extra control lever fully 4 or 5 times. This will release the pressure inside the hose.
2. Raise sleeve (2) of coupling (1), insert coupling (3), then return sleeve (2) to its original position to complete the connection.
3. Pull the hose to confirm that it is connected securely.

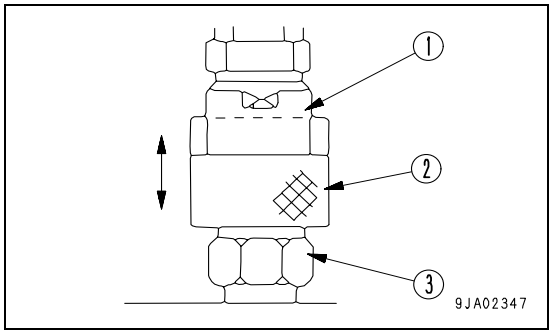

Precautions for use

Check that the lock pin has been inserted securely, then operate the lift arm and bucket control levers.

Precautions when removing the attachment

Before removing the attachment, disconnect the hydraulic coupling.

https://truckmanualshub.com/

Work possible using wheel loader

In addition to the following, it is possible to further increase the range of applications by using various attachments.

Digging operations

WARNING

- **Never carry out digging or scooping operations with the machine articulated. There is danger that the machine may tip over.**
- **When the machine is traveling or the work equipment is raised, the moment that the E.C.S.S. switch is turned ON, the work equipment will move.**
- **If operations are carried out with the E.C.S.S. switch left at the ON position, the moment that the travel damper switch is turned ON, the work equipment will move.**

NOTICE
If the tires slip, the tire life will be reduced, so do not allow the tires to slip during operation.

Loading piled soil

- Scoop up the piled soil by moving the machine forward as shown below. If the tires begin slipping under heavy load, raise the bucket slightly to reduce the load.

1. Force the bucket into the pile of soil while moving the machine forward.

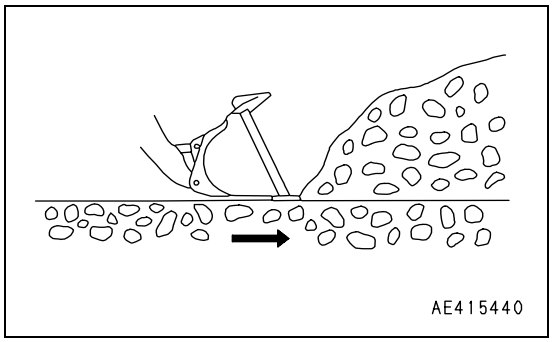

2. Thrust the bucket fully into the soil, then drive the machine forward and operate the work equipment control lever to raise the lift arm. In addition, operate the work equipment control lever occasionally to tilt the bucket so that the bucket can be fully loaded.

   Try to keep the load in the center of the bucket; if the load is on one side of the bucket, the load will be unbalanced.

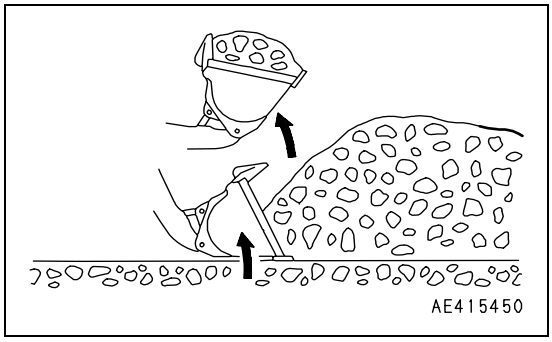

3. If it is difficult to thrust the bucket into the soil, operate the work equipment control lever to the left and right to move the cutting edge of the bucket up and down.

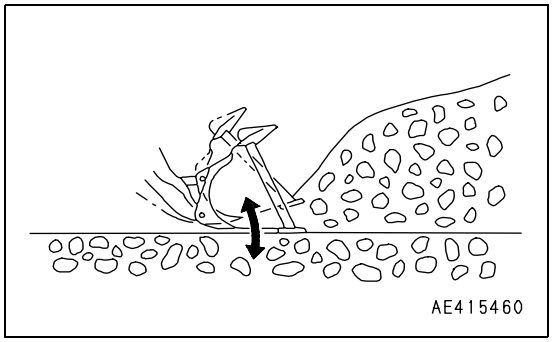

https://truckmanualshub.com/

Digging and loading on level ground

- When digging and loading on level ground, set the bucket edge facing down slightly as follows and drive the machine forward. Always be careful not to load the bucket on one side and cause an unbalanced load.
  This operation should be carried out in 1st gear.

CAUTION

Do not set the bucket facing down more than 20 degrees.

1. Set the edge of the bucket facing slightly down.

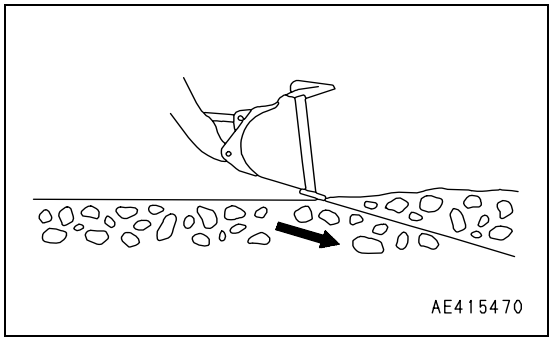

2. Drive the machine forward and operate the work equipment control lever forward to cut a thin layer of the surface each time when excavating the soil.

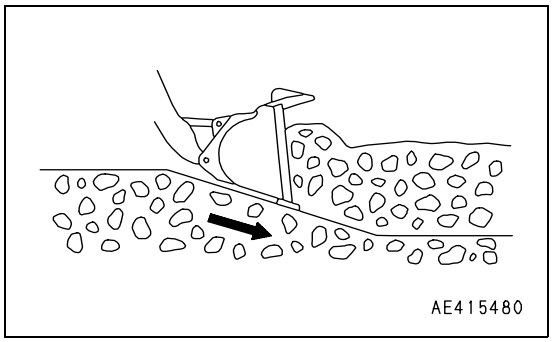

3. Operate the work equipment control lever slightly up and down to reduce the resistance when driving the machine forward.

   When digging with the bucket, avoid imposing the digging force onto only one side of the bucket.

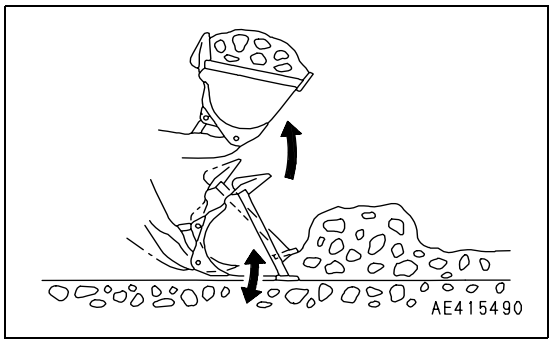

https://truckmanualshub.com/

Leveling operations

NOTICE

- **Always operate the machine in reverse when carrying out leveling operations.**
- **If it is necessary to carry out leveling operations when traveling forward, do not set the bucket dumping angle to more than 20 degrees.**
- **Turn the E.C.S.S. switch OFF when carrying out leveling operations.**

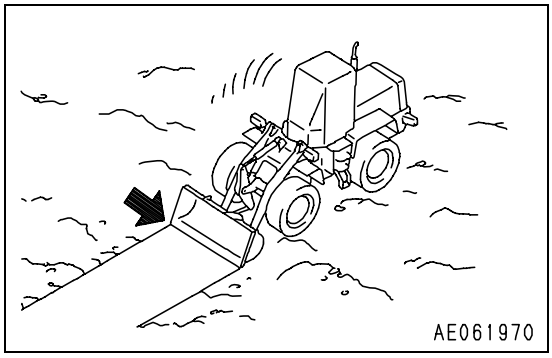

1. Scoop soil into the bucket. Move the machine backward while spreading soil from the bucket little by little.
2. Go over the spread soil with the bucket teeth touching the ground and level the ground by back-dragging.
3. Scoop some more soil into the bucket, put the lift arm control lever in FLOAT position, level the bucket at ground level, and smooth the ground by moving backward.

Pushing operation

⚠ CAUTION

Never set the bucket to the DUMP position when carrying out pushing operation.

When carrying out pushing operations, set the bottom of the bucket parallel to the ground surface.

Load and carry operations

⚠ WARNING

- **When carrying a load, lower the bucket to lower the center of gravity when traveling.**
- **When the machine is traveling or the work equipment is raised, the moment that the E.C.S.S. switch is turned ON, the work equipment will move.**
- **If operations are carried out with the E.C.S.S. switch left at the ON position, the moment that the travel damper is actuated, the work equipment will move.**

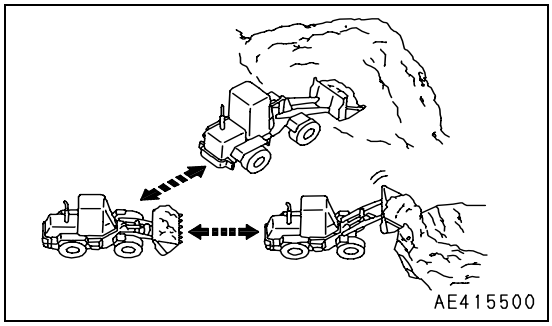

The load and carry method for wheel loaders consists of a cycle of scooping -> hauling ->loading (into a hopper, truck, etc.)
Always keep the travel path properly maintained.
When using the load and carry method, see “Precautions for using load and car method on page 3-97“.

https://truckmanualshub.com/

Loading operations

Select the method of operation which will give the minimum amount of turning and travel in order to provide the most efficient method for the jobsite.

⚠ WARNING

- **Always keep the jobsite flat, and do not operate the steering wheel suddenly or apply the brakes suddenly when the lift arm is raised with a loaded bucket. This is dangerous.**
- **Never thrust the bucket in when traveling at high speed (when loading soil or crushed rock). This is dangerous.**
- **When the machine is traveling or the work equipment is raised, the moment that the E.C.S.S. switch is turned ON, the work equipment will move.**
- **If operations are carried out with the E.C.S.S. switch left at the ON position, the moment that the travel damper is actuated, the work equipment will move.**

NOTICE

- **If the tires slip, the tire life will be reduced, so do not allow the tires to slip during operation.**
- **Avoid excessive bucket shaking.**

Cross drive loading

Always set the wheel loader facing at a right angle to the stockpile. After digging in and scooping up the load, drive the machine straight back in reverse, then bring the dump truck in between the stock pile and the wheel loader.
This method requires the least time for loading, and is extremely effective in reducing the cycle time.

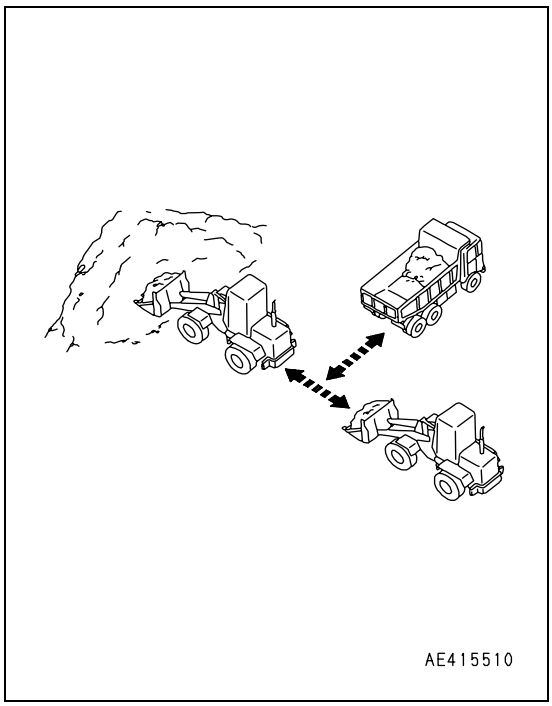

https://truckmanualshub.com/

V-SHAPE LOADING

Position the dump truck so that the direction of approach of the wheel loader is approx. 60 degrees from the direction of approach to the stockpile. After loading the bucket, drive the wheel loader in reverse, then turn it to face the dump truck and travel forward to load the dump truck.
The smaller the turning angle of the wheel loader is, the more efficient the operation becomes.
When loading a full bucket and raising it to the maximum height, first shake the bucket to stabilize the load before raising the bucket. This will prevent the load from spilling to the rear.

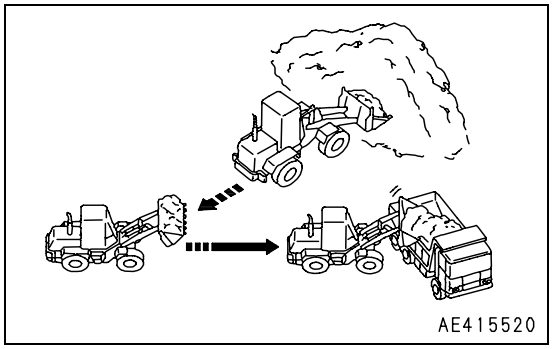

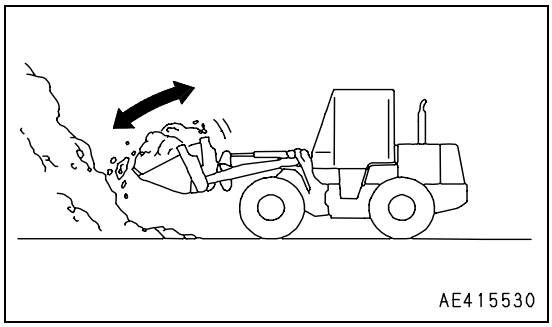

Precautions when piling up loads

When forming products into a pile, be careful not to let the rear counterweight come into contact with the ground.
Do not set the bucket to the DUMP position when piling-up loads.

https://truckmanualshub.com/

Precautions for operation

Permissible water depth

When working in water or on swampy ground, do not let the water come above the bottom of the axle housing.
After finishing the operation, wash and check the lubricating points.

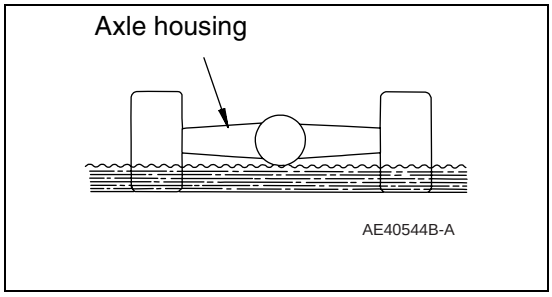

If wheel brake does not work

If the machine is not stopped by depressing the brake pedal, use the parking brake to stop the machine.

NOTICE
If the parking brake has been used as an emergency brake, contact your Komatsu distributor to have the parking brake checked for any abnormality.

Precautions when driving up or down slopes

Lower the center of gravitiy when turning

When turning on slopes, lower the work equipment to lower the center of gravity before turning. It is dangerous to turn the machine suddenly on slopes.

Breaking on downhill slope

If the foot brake is used frequently when traveling downhill, the brake will overheat and may be damaged. Use the accelerator pedal to make full use of the braking force of the engine when traveling downhill.
Use the right brake pedal for braking.
If the brakes are used excessively, the axle oil temperature caution lamp may light up and the alarm buzzer may sound intermittently. For details of the necessary action to take, see “AXLE OIL TEMPERATURE CAUTION LAMP on page 3-16“ in "Explanation of components".

If engine stops

If the engine stops on a slope, apply the parking brake immediately, and lower the work equipment to the ground and stop the machine. Then put the directional lever in neutral position, and start the engine again.

Precautions when driving machine

When the machine travels at high speed for a long distance, the tires become extremely hot. This causes early wear of the tires, so it should be avoided as much as possible. If the machine must be driven for a long distance, take the following precautions.

- Follow the regulations related to this machine, and drive carefully.
- Before driving the machine, carry out the checks before starting.
- The most suitable tire pressure, travel speed, or tire type differ according to the condition of the travel surface. Contact your Komatsu distributor or tire dealer for information.
- The following is a guide to suitable tire pressures and speeds when traveling on a paved surface with standard tires. (20.5-25-12PR)
  Tire pressure: 0.27 MPa (2.8 kgf/cm2, 39.8 PSI)
  Speed:14 km/h (8.7 MPH)
- Check the tire pressure before starting, when the tire is cool.
- After traveling for 1 hour, stop for 30 minutes. Check the tires and other parts for damage; also check the oil and coolant levels.
- Always travel with the bucket empty.
- Never put “calcium chloride“ or “dry ballast“ in the tires when traveling.

https://truckmanualshub.com/

Adjusting work equipment posture

WARNING

- **Stop the machine on flat ground and put blocks in front and behind the wheels.**
- **Set parking brake lever to the LOCK position.**
- **Secure the front and rear frames with the safety bar.**
- **Always attach the warning tag to the work equipment control lever.**
- **Do not go under the work equipment when the arm is raised. To support the work equipment securely, use a strong support that can withstand the weight of the work equipment and prevent the arm coming from down.**

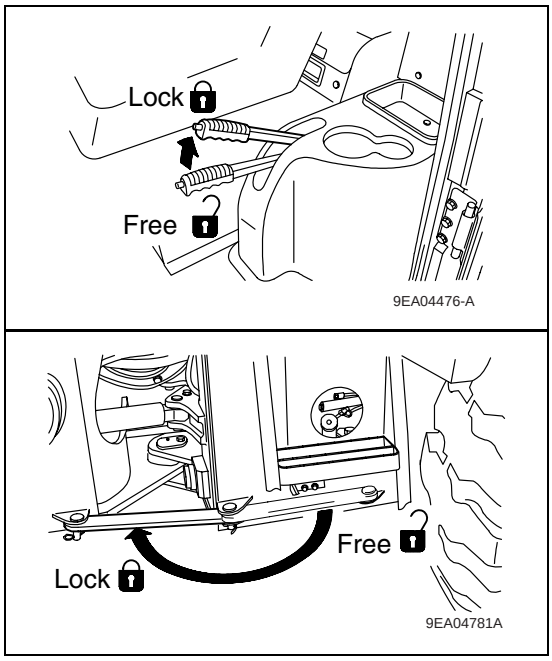

The boom kickout makes it possible to set the bucket so that it automatically stops at the desired lifting height (lift arm higher than horizontal) and the bucket positioner makes it possible to set the bucket so that it automatically stops at the desired digging angle. The setting can be adjusted to match the working conditions.

Adjusting boom kickout

1. Raise the bucket to the desired height, set the lift arm control lever at HOLD, then set the safety lever to the LOCK position and stop the engine.
2. Loosen two bolts (1), and adjust plate (2) so that the bottom edge is in line with the center of the sensing surface of proximity switch (3). Then tighten the bolts to hold the plate in position.
3. Loosen two nuts (4) to make a clearance of 3 to 5 mm (0.118 to 0.197 in) between plate (2) and the sensing surface of proximity switch (3). Then tighten the nuts to hold in position.
   Tightening torque: 17.2 ± 2.5 N·m (1.75 ± 0.25 kgf·m, 12.7 ± 1.8 lbft)
4. After adjusting, start the engine and operate the lift arm control lever. Check that the lever is automatically returned to HOLD when the bucket reaches the desired height.

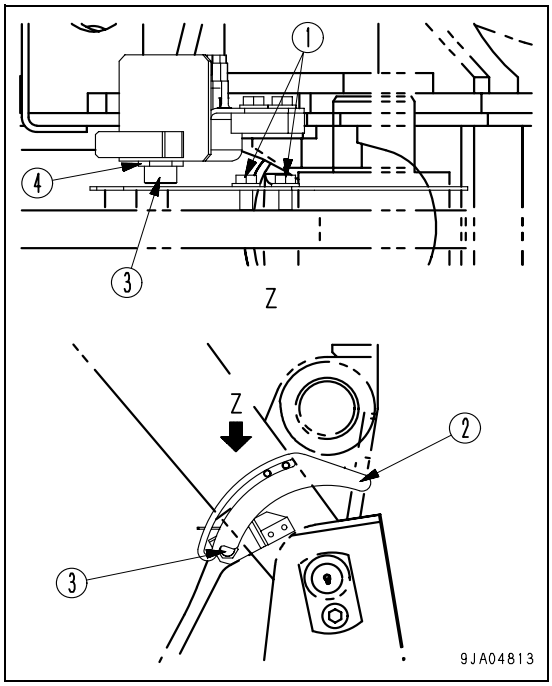

https://truckmanualshub.com/

Adjusting bucket positioner

1. Lower the bucket to the ground, set to the desired digging angle, return the bucket control lever at HOLD, then set the safety lever to the LOCK position and stop the engine.

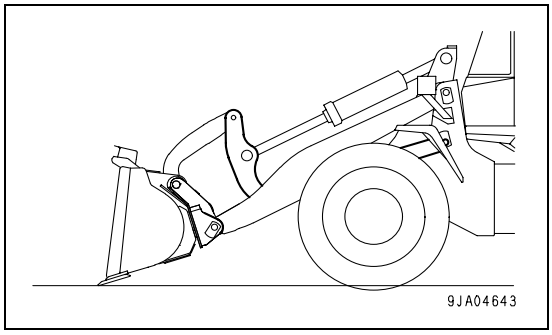

2. Set the attachment selector switch to bucket position (a).

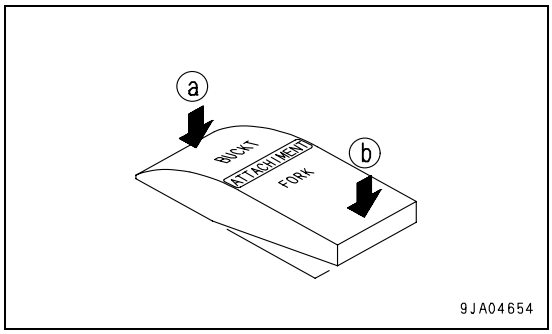

3. Loosen nut (1), then adjust the position of the proximity switch so that the rear tip of bar (2) is in line with the center of the sensing surface of proximity switch (3).
4. Adjust nut (1) so that the clearance between bar (2) and the sensing surface of proximity switch (3) is 3 to 5 mm, then tighten the nut to hold in position.
   Tightening torque: 17.2 ± 2.5 N·m (1.75 ± 0.25 kgf·m, 12.7 ± 1.8 lbft)
5. Loosen bolt (4) and adjust so that the tip of protector (5) extends 0.5 to 1.0 mm from the sensing surface of proximity switch (3), then tighten the bolt to hold in position.
6. After adjusting, start the engine and raise the lift arm. Operate the bucket control lever to the DUMP position, then operate it to the TILT BACK position and check that the lever is automatically returned to the HOLD position when the bucket reaches the desired digging angle.

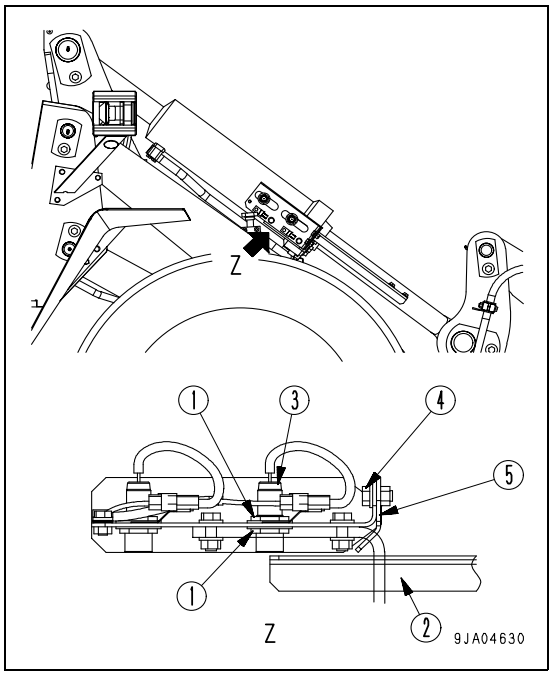

https://truckmanualshub.com/

Adjusting fork positioner

1. Lower the forks to the ground, set to the horizontal position, return the bucket control lever to the HOLD position, then set the safety lock lever to the LOCK position and stop the engine.

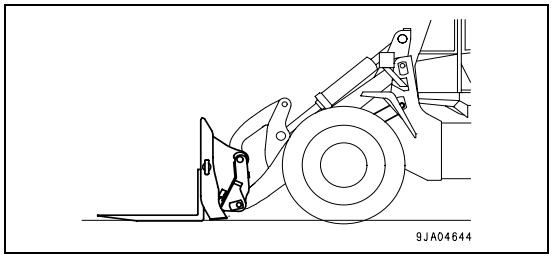

2. Set the attachment selector switch to fork position (b).

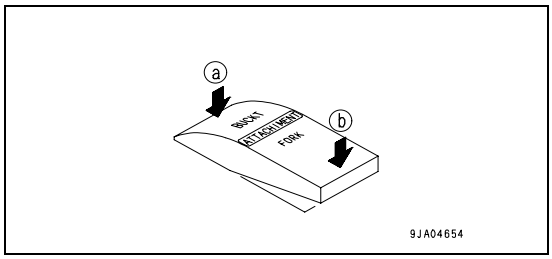

3. Loosen nut (1), then adjust the position of the proximity switch so that the rear tip of bar (2) is in line with the center of the sensing surface of proximity switch (3).
4. Adjust nut (1) so that the clearance between bar (2) and the sensing surface of proximity switch (3) is 3 to 5 mm, then tighten the nut to hold in position.
   Tightening torque: 17.2 ± 2.5 N·m (1.75 ± 0.25 kgf·m, 12.7 ± 1.8 lbft)
5. Loosen bolt (4) and adjust so that the tip of protector (5) extends 0.5 to 1.0 mm from the sensing surface of proximity switch (3), then tighten the bolt to hold in position.
6. After adjusting, start the engine, and raise the lift arm. Dump the fork, then tilt back and check that the lever returns automatically to the HOLD position when the fork is horizontal.

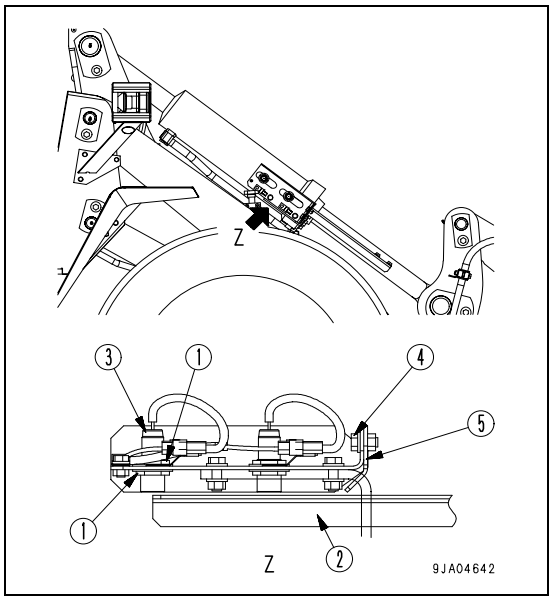

REMARK
If it is not possible to adjust the fork positioner at switch position FORK (b) to horizontal switch-off, the selector switch has to be set to BUCKET (a).
Then the fork positioner has to be adjusted according to items 3. to 6. on page 3-91.

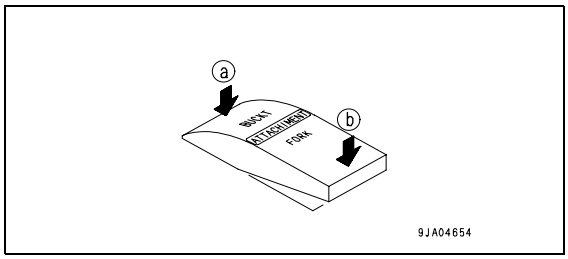

Bucket level indicator

(A) and (B) at the top rear of the bucket are the level indicators, so the bucket angle can be checked during operations.
(A): Parallel with cutting edge
(B): 90 degrees to cutting edge

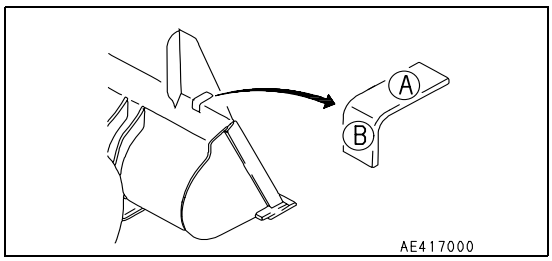

https://truckmanualshub.com/

Parking machine

⚠ WARNING

- **Avoid stopping suddenly. Give yourself ample room when stopping.**
- **Do not park the machine on slopes.**
- **If the machine has to be parked on a slope, set it facing directly down the slope, then dig the bucket into the ground and put blocks under the tires to prevent the machine from moving.**
- **If the control lever is touched by accident, the work equipment or the machine may move suddenly, and this may lead to a serious accident. Before leaving the operator's compartment, always set the safety lock lever securely to the LOCK position.**
- **Even if the parking brake lever is pulled and set to the LOCK position, there is a danger of the machine moving until the parking brake pilot lamp lights up, so keep the brake pedal depressed.**

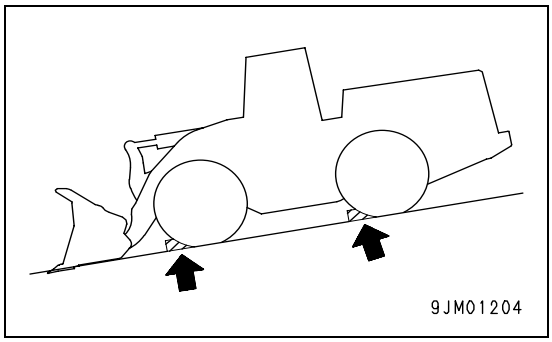

NOTICE
Never use the parking brake lever to brake the machine when traveling except in an emergency. Apply the parking brake only after the machine has stopped.

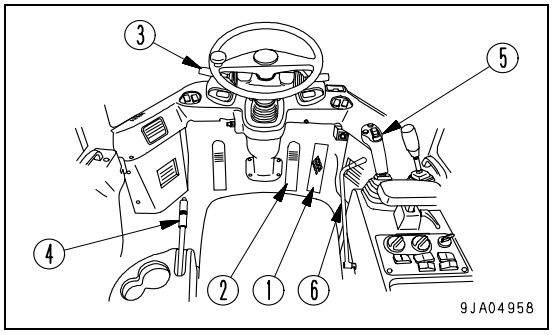

1. Release accelerator pedal (1), then depress brake pedal (2) to stop the machine.

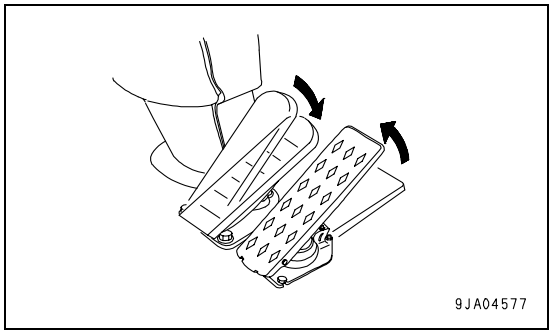

2. Place directional lever (3) in N (neutral) position.

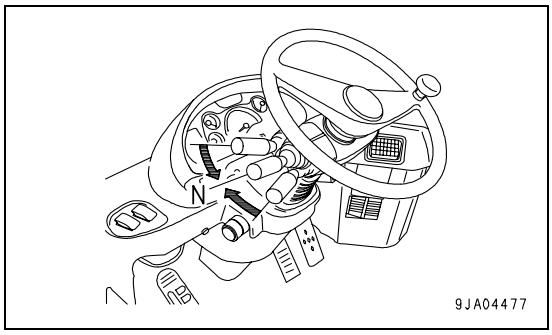

https://truckmanualshub.com/

3. Pull parking brake lever (4) and set it to the LOCK position.

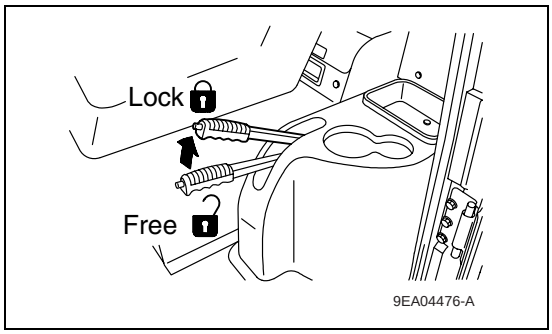

4. Operate work equipment control lever (5) to lower the bucket to the ground.

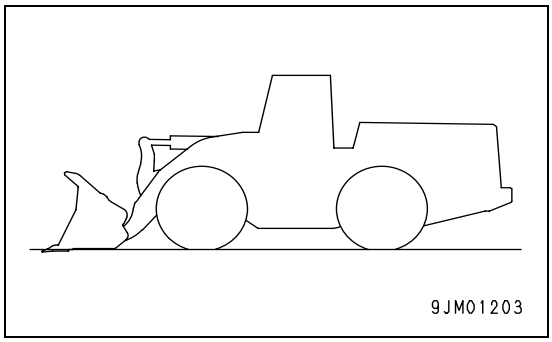

5. Set the safety lock lever (6) to the LOCK position.

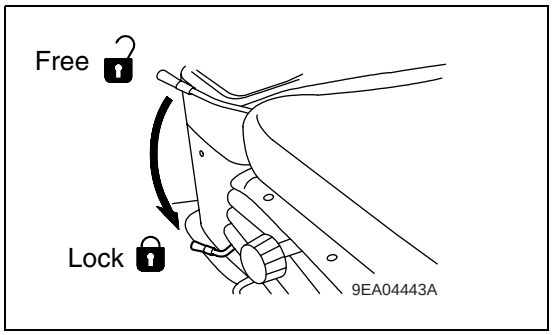

https://truckmanualshub.com/

Check after stopping engine

Check the engine water temperature, engine oil pressure, HST oil temperature, and fuel level with the meters and lamps.
If the engine has overheated, do not stop it suddenly. Run the engine at a midrange speed to allow the engine to cool down before stopping it.

Checks after completion of operation

1. Walk around the machine and check the work equipment, body work, and undercarriage, and check also for oil and water leakage.
2. Fill the fuel tank.
3. Check the engine compartment for paper and debris. Clean out any paper and debris to avoid a fire hazard.
4. Remove any mud affixed to the undercarriage.

Locking

Always lock the following parts.
(1) Fuel filler cap
(2) Rear grill
(3) Engine side cover (2 places)
(4) Cab door (2 places)

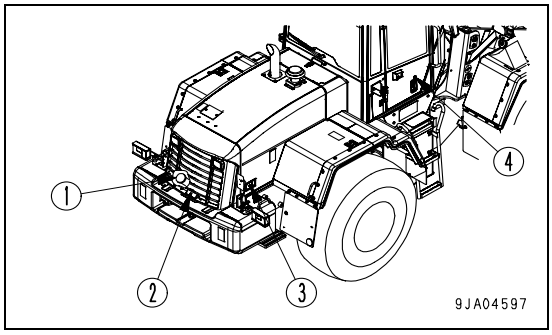

REMARK
The starting switch key is used also for locks (1), (2), (3) and (4).

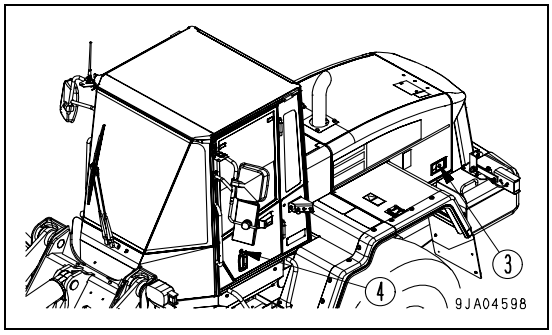

https://truckmanualshub.com/

Handling the tires

Precautions when handling tires

⚠ CAUTION

If a tire has reached any of the following service limits, there is danger that the tire may burst or cause an accident, so to ensure safety, replace it with a new tire.

- **Service limits for wear**

When the remaining depth of the groove on construction equipment tires (at a point approx. 1/4 of the tread width) is 15% of the groove depth on a new tire.

- **When the tire shows marked uneven wear, stepped wear or other abnormal wear, or when the cord layer is exposed.**
- **Service limits for damage**

When there is external damage extending to the cord or when the cord is broken
When the cord is cut or there is dragging
When the tire is peeling (there is separation)
When the bead is damaged

- **For tubeless tires, when there is air leakage or improper repair**

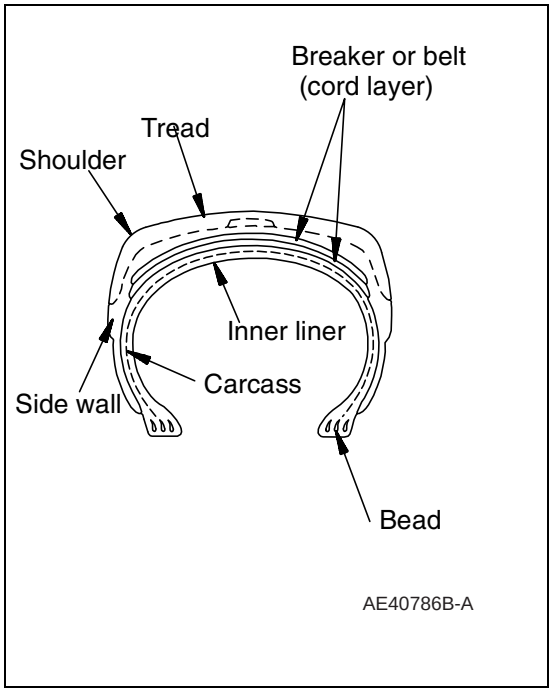

Please contact your Komatsu distributor when replacing the tires. It is dangerous to jack up the machine without taking due care.

Tire pressure

Measure the tire pressure before starting operations, when the tires are cool.
If the tire inflation pressure is too low, there will be overload; if it is too high, it will cause tire cuts and shock burst.
To prevent these problems, adjust the tire inflation pressure according to the table on the next page.

Deflection ratio = H - h / H x 100
As a guideline that can be checked visibly, the deflection ratio of the front tire (deflection/free height) is as follows.
When carrying normal load (lift arm horizontal): Approx. 15 to 25 %
When digging (rear wheels off ground): Approx. 25 to 35 %
When checking the tire inflation pressure, check also for small scratches or peeling of the tire, for nails or pieces of metal which may cause punctures, and for any abnormal wear.
Clearing fallen stones and rocks from the operating area and maintaining the surface will extend the tire life and give improved economy.

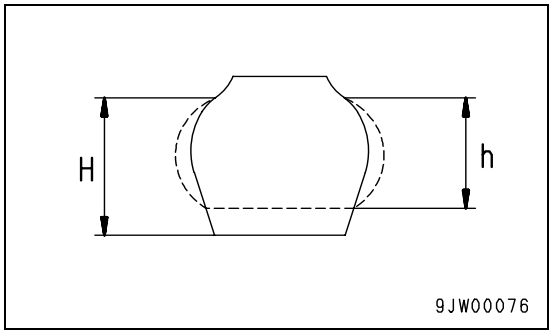

For operations on normal road surfaces, rock digging operations: High end of range in air pressure chart
Stockpile operations on soft ground: Average pressure in air pressure chart
Operations on sand (operations not using much digging force): Low end of range in air pressure chart

If the deflection of the tire is excessive, raise the inflation pressure within the limits given in the table to give a suitable deflection (see deflection ratio).

https://truckmanualshub.com/

Tire size (Pattern)	Inflation pressure [MPa (kgf/cm², PSI)]			
	Soft ground (sandy ground)	Normal road		When shipped from factory
		Stockpile	Digging	
20.5-25-12PR (L2 Traction)	0.19 - 0.32 (1.9 - 3.3, 27.0 - 46.9)	0.19 - 0.32 (1.9 - 3.3, 27.0 - 46.9)	0.21 - 0.34 (2.1 - 3.5, 29.8 - 49.7)	Front and Rear Tire: 0.27 (2.8, 39.8)
20.5-25-12PR (L3 Rock)	0.19 - 0.32 (1.9 - 3.3, 27.0 - 46.9)	0.19 - 0.32 (1.9 - 3.3, 27.0 - 46.9)	0.21 - 0.34 (2.1 - 3.5, 29.8 - 49.7)	Front and Rear Tire: 0.27 (2.8, 39.8)

Stockpile operations mean the loading of sand and other loose materials.

Precautions for using load and car method

When traveling continuously with load and carry operations, choose the correct tires to match the operating conditions, or choose the operating conditions to match the tires. If this is not done, the tires will be damaged, so contact your Komatsu distributor or tire dealer when selecting tires.

https://truckmanualshub.com/

Transportation

When transporting the machine, observe all related laws and regulations, and be careful to assure safety.

Transportation procedure

As a basic rule, always transport the machine on a trailer.
When selecting the trailer, see the weights and dimensions given in section “Technical data on page 5-2“.
Note that the specifications for the weights and dimensions for transportation differ according to the type of tires and type of bucket.

Loading, unloading work with trailers

⚠ WARNING

- **When loading or unloading the machine, run the engine at low speed, travel at low speed, and operate slowly.**
- **When loading or unloading the machine, stop the trailer on firm level ground.**
- **In addition, keep well away from the road shoulder.**
- **Use ramps of ample width, length, thickness, and strength, and install them securely at an angle of less than 15°.**
- **When using an embankment, compact the fill soil thoroughly and make sure that the slope face does not collapse.**
- **Remove the mud stuck to the undercarriage to prevent the machine from slipping to the side on the ramps.**
- **In addition, remove any water, snow, ice, grease, or oil from the ramps.**
- **Never change direction on the ramps. There is danger that the machine may tip over.**
- **If it is necessary to change direction, return to the ground surface or the trailer platform, correct the direction, and start again.**
- **The position of the center of gravity of the machine will change suddenly at the connection of the ramp and trailer, and there is danger of the machine losing its balance. Always drive slowly over this point.**

When loading or unloading, always use ramps or a platform and carry out the operation as follows.

Loading

1. Load and unload on firm level ground only.
   Maintain a safe distance from the edge of a road.
2. Apply the brakes on the trailer securely and insert blocks under the tires to ensure that the trailer does not move.
   Then fix the ramps in line with the centers of the trailer and the machine.
   Be sure that the two sides are at the same height as one another.
   Make the angle of the ramps a maximum of 15º.
   Set the distance between the ramps to match the center of the tires.
   If the ramp sags appreciably, reinforce it with blocks, etc.
3. Determine the direction of the ramp, then slowly load the machine.
4. Load the machine correctly in the specified position on the trailer.

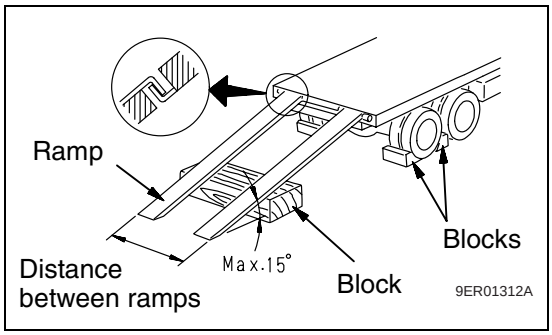

https://truckmanualshub.com/

Securing machine

Load the machine on to a trailer as follows.

1. Lower the work equipment slowly.
2. Set the safety lock lever to the LOCK position securely.
3. Turn the starting switch to the OFF position to stop the engine, and pull out the starting switch key.
4. Lock front frame and rear frame with safety bar.
5. Put blocks in front and behind the wheels, and secure the machine with chains or wire rope to prevent the machine from moving during transportation.
   In particular, attach the machine securely to prevent it from slipping sideways.
6. Always retract the car radio antenna fully.

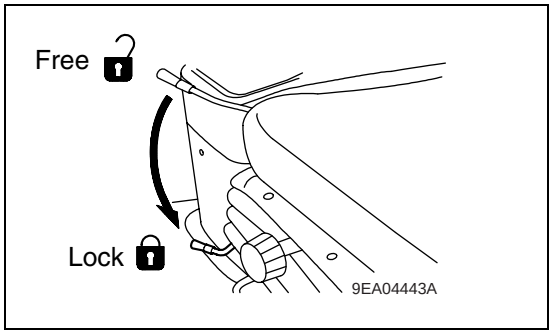

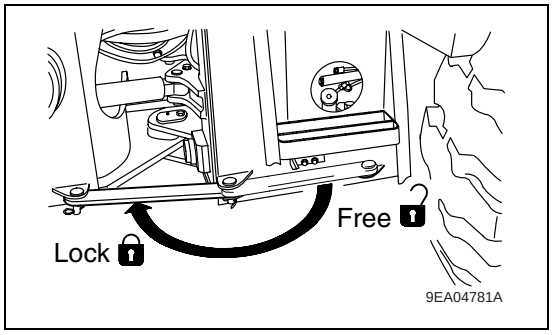

Unloading

1. Load and unload on firm level ground only. Maintain a safe distance from the edge of a road.
2. Apply the brakes on the trailer securely and insert blocks under the tires to ensure that the trailer does not move.
   Then fix the ramps in line with the centers of the trailer and the machine.
   Be sure that the two sides are at the same height as one another.
   Make the angle of the ramps a maximum of 15º.
   Set the distance between the ramps to match the center of the tires.
   If the ramp sags appreciably, reinforce it with blocks, etc.

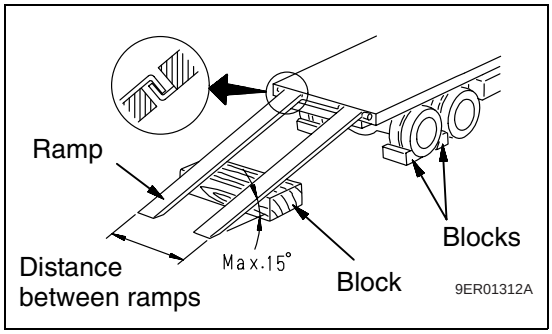

3. Remove the chains and wire ropes fastening the machine.
4. Start the engine.
   Warm the engine up fully.
5. Set the safety lock lever to the FREE position.
6. Determine the direction of the ramps, then drive the machine slowly down the ramps to unload the machine.

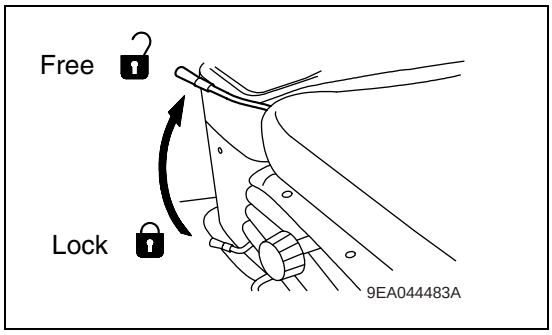

https://truckmanualshub.com/

Lifting machine

WARNING

- **When lifting the machine, if the wire rope is not fitted correctly the machine may fall and cause serious injury or even death. Raise the machine 100 to 200 mm (3.9 to 7.9 in) from the ground, check that the machine is horizontal and that there is no slack in the wire rope, then continue to lift the machine.**
- **Before lifting the machine, always stop the engine and lock the brakes. Lock front frame and rear frame with safety bar.**
- **Lifting operations using a crane must be carried out by a qualified operator.**
- **Never raise the machine with any worker on it.**
- **Always make sure that the wire rope used for lifting the machine is of ample strength for the weight of the machine.**
- **Never try to lift the machine at any position or in any posture other than the posture specified.**
- **Never go under the machine when it is raised.**

CAUTION

When the machine is raised, check that there is no oil leakage from the hydraulic circuits.
When carrying out the lifting operation, please contact your Komatsu distributor.

NOTICE
The lifting procedure applies to machines with standard specifications.
The method of lifting differs according to the attachments and options actually installed. In such cases, please contact your Komatsu distributor for information.

For details of the weight, see “Weight table on page 3-101“.

https://truckmanualshub.com/

Location of lifting position mark

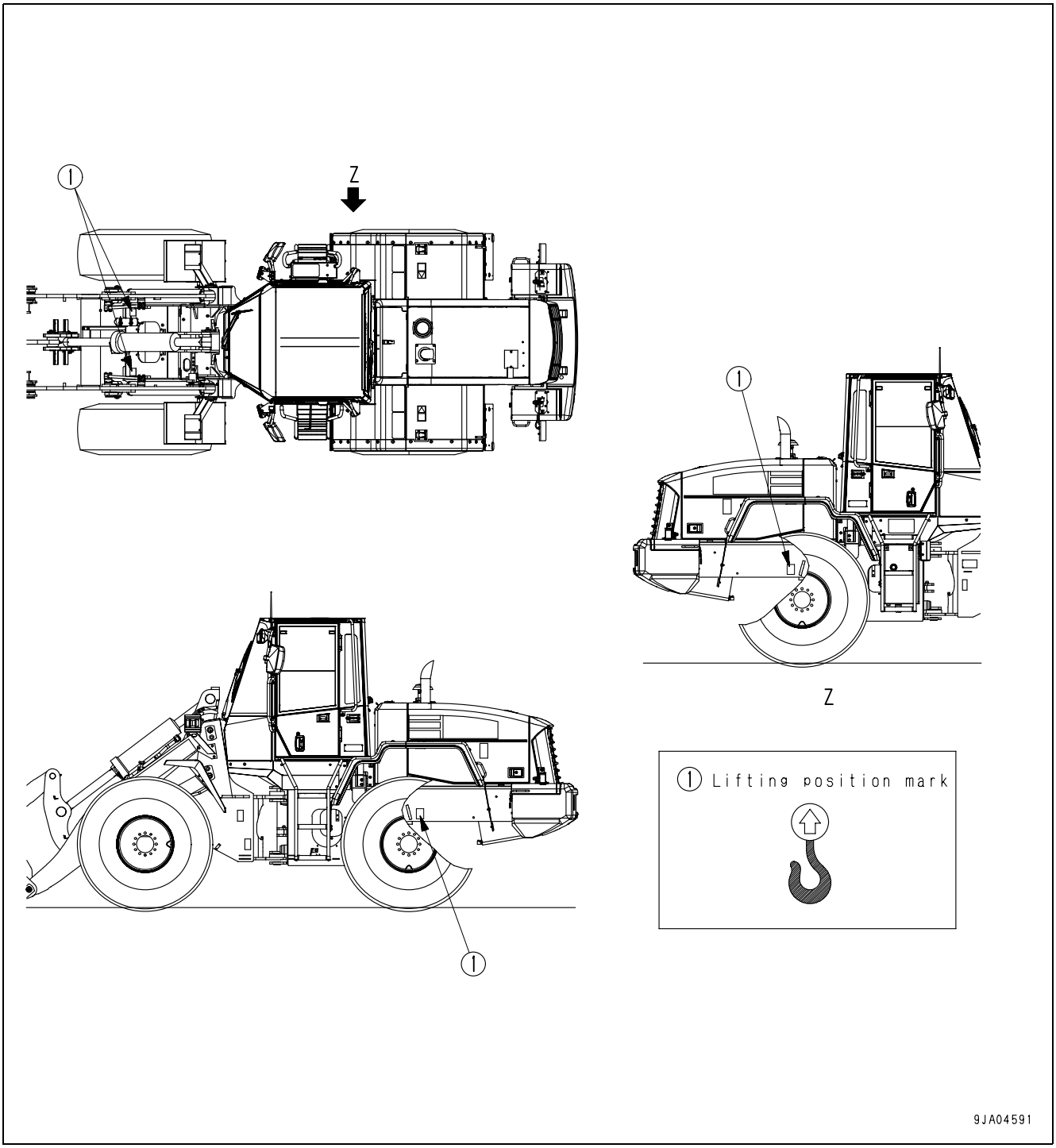

Weight table

	Machine weight	Front wheel load	Rear wheel load	Center of gravity
WA250PT-5H	12,450 kg (27,452 lb)	5,270 kg (11,620 lb)	7,180 kg (15,832 lb)	1,670mm (5 ft 6 in)

https://truckmanualshub.com/

Lifting procedure

CAUTION

When the machine is raised, check that there is no oil leakage from the hydraulic circuits.
When carrying out the lifting operation, please contact your Komatsu distributor.

Lifting work can be carried out only for machines with lifting marks. Before starting the lifting operation, stop the machine in a horizontal place and do as follows.

1. Start the engine, make sure that the machine is horizontal, then set the work equipment to the travel posture.
   For details, see “Moving the machine on page 3-73“.

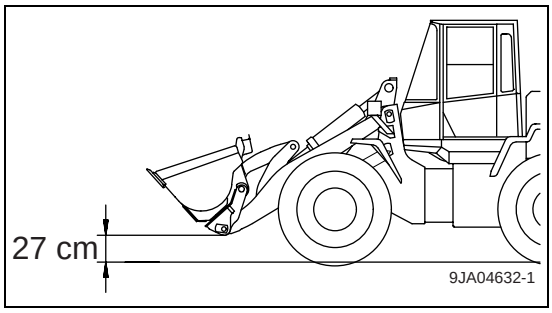

2. Operate the safety lock lever to the LOCK position.

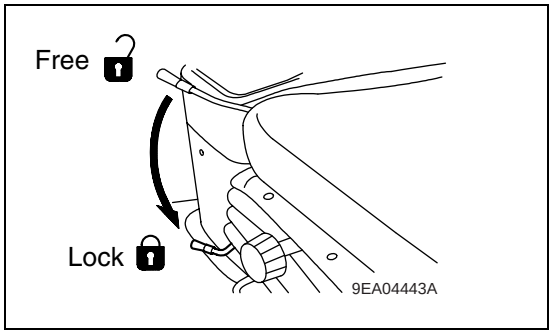

3. Stop the engine, check that the area around the operator's compartment is safe, then lock with the safety bar so that the front frame and rear frame do not articulate.

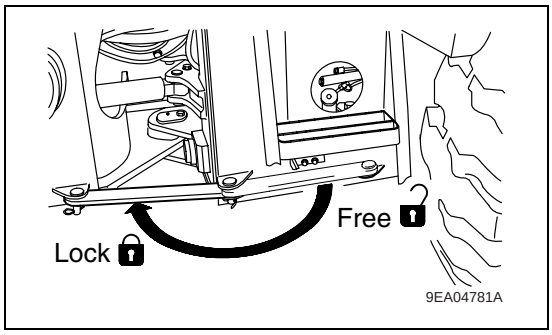

4. Fit the lifting equipment to the lifting hooks (marked by the lifting mark) at the front of the front frame and the rear of the rear frame.
   For machines equipped with a rear full fender, remove the rear full fender before carrying out the operation.

5. When the machine leaves the ground, stop for a moment and wait for the machine to stabilize, then continue the lifting operation slowly.

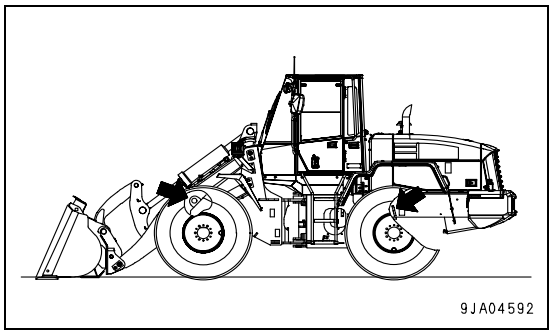

https://truckmanualshub.com/

Cold weather operation

Precautions for low temperature

If the temperature becomes low, it becomes difficult to start the engine, and the coolant may freeze, so do as follows.

Fuel and lubricants

Change to fuel and oil with low viscosity for all components. For details of the specified visicosity, see “Fuel, coolant and lubricants on page 4-8“.

Coolant

⚠ WARNING

- **Antifreeze is toxic. Be careful not to get it into your eyes or on your skin. If it should get into your eyes or on your skin, wash it off with large amount of fresh water and see a doctor at once.**
- **When changing the coolant or when handling coolant containing antifreeze that has been drained when repairing the radiator, please contact your Komatsu distributor. Antifreeze is toxic, so do not let it flow into drainage ditches or spray it on to the ground surface.**
- **Antifreeze is flammable, so do not bring any flame close. Do not smoke when handling antifreeze.**

NOTICE

- **Never use methanol, ethanol or propanol based antifreeze.**
- **Avoid using any leak-preventing agent, regardless if it is sold separately or in antifreeze.**
- **Do not mix one antifreeze with a different brand.**

For details of the antifreeze mixture when changing the coolant, see “Clean inside of cooling system on page 4-24“.
Use a Permanent Antifreeze (ethylene glycol mixed with corrosion inhibitor, antifoam agent, etc.) meeting the standard requirements as shown below. With permanent antifreeze, no change of coolant is required for a year. If it is doubtful that an available antifreeze meets the standard requirements, ask the supplier of that antifreeze for information.
Standard requirements for permanent antifreeze

- SAE J1034
- FEDERAL STANDARD O-A-548D

REMARK

In areas where permanent antifreeze is not available, it is possible to use antifreeze whose main component is ethylene glycol and does not contain any corrosion inhibitor. (Such antifreeze can be used for the winter season only.) However, in such a case, the cooling water must be changed twice a year (spring and fall), so use permanent antifreeze when possible.

https://truckmanualshub.com/

Battery

WARNING

- **The battery generates flammable gas, so do not bring fire or sparks near the battery.**
- **Battery electrolyte is dangerous. If it gets in your eyes or on your skin, wash it off with a large amount of water and consult a doctor.**
- **Battery electrolyte dissolves paint. If it gets on to the bodywork, wash it off immediately with water.**
- **If the battery electrolyte is frozen, do not charge the battery or start the engine with a different power source. There is danger that the battery may explode.**
- **Battery electrolyte is toxic, so do not let it flow into drainage ditches or spray it on to the ground surface.**

When the ambient temperature drops, the capacity of the battery will also drop. If the battery charge ratio is low, the battery electrolyte may freeze. Maintain the battery charge as close as possible to 100%, and insulate it against cold temperature so that the machine can be started easily the next morning.

REMARK
Measure the specific gravity and calculate the rate of charge from the following conversion table.

Temperature (°C) / Charging Rate(%)	20	0	-10	-20
100	1.28	1.29	1.30	1.31
90	1.26	1.27	1.28	1.29
80	1.24	1.25	1.26	1.27
75	1.23	1.24	1.25	1.26

- As the battery capacity drops markedly in low temperatures, cover the battery or remove it from the machine, keep it in a warm place, and install it again the next morning.
- If the electrolyte level is low, add distilled water in the morning before beginning work. Do not add the water after the day's work so as to prevent fluid in the battery from freezing in the night.

https://truckmanualshub.com/

Precautions after completion of work

To prevent mud, water, or the undercarriage from freezing and making it impossible for the machine to move on the following morning, always observe the following precautions.

- Remove all the mud and water from the machine body. In particular, wipe the hydraulic cylinder rod clean to prevent damage to the seal caused by mud or dirt on the rod surface getting inside the seal together with drops of water.
- Park the machine on hard, dry ground.
  If this is impossible, park the machine on wooden boards.
  The boards help protect the tracks from being frozen in soil and the machine can start next morning.
- Open the drain valve and drain any water collected in the fuel system to prevent it from freezing.

After cold weather

When season changes and the weather becomes warmer, do as follows.

- Replace the fuel and oil for all parts with oil of the viscosity specified.
  For details, see “Fuel, coolant and lubricants on page 4-8“.
- If for any reason permanent antifreeze cannot be used, and an ethyl glycol base antifreeze (winter, one season type) is used instead, or if no antifreeze is used, drain the cooling system completely, then clean out the inside of the cooling system thoroughly, and fill with fresh soft water.

Warming-up operation for steering hydraulic circuit in cold weather

⚠ WARNING

If the steering wheel is operated and stopped while the oil temperature is low, there may be a time lag before the machine stops turninig.
In this case, use the safety bar to ensure safety, and perform the warm-up operation in a wide place.
Do not relieve the hydraulic oil in the circuit continuously for more than 5 seconds.

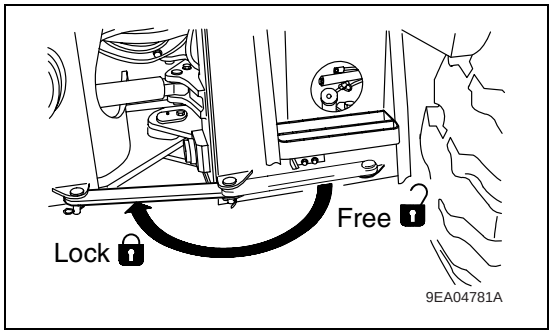

When the temperature is low, do not start the operation of the machine immediately after starting the engine.

Warming up steering hydraulic circuit
Slowly operate the steering wheel to the left and right to warm up the oil in the steering valve. (Repeat this operation for about 10 minutes to warm up the oil.)

NOTICE
Operate the steering wheel a little and stop in that position. Then, confirm that the machine is steered by an angle equivalent to the turning angle of the steering wheel.

https://truckmanualshub.com/

Long-term storage

Before storage

When putting the machine in storage for a long time, do as follows.

- Clean and wash all parts, then store the machine indoors. If the machine has to be stored outdoors, select level ground and cover the machine with a sheet.
- Completely fill the fuel tank, lubricate and change the oil before storage.
- Apply a thin coat of grease to the metal surface of the hydraulic piston rods.
- Disconnect the negative terminals of the battery and cover it or remove it from the machine and store it separately.
- Make sure that the machine does not move by setting the safety lock lever in the LOCK position.

During storage

⚠ WARNING

If it is unavoidably necessary to carry out the rust-preventive operation while the machine is indoors, open the doors and windows to improve ventilation and prevent gas poisoning.

- During storage, always operate the machine once a month so that a new film of oil will be coated over movable parts and component surfaces. At the same time, also charge the battery.
- When operating the work equipment, wipe off all the grease from the hydraulic cylinder rod.
- If the machine is equipped with an air conditioner, operate it for 3 to 5 minutes once a month to lubricate each portion of its compressor. Be sure to idle the engine at low speed for this purpose. Also, check the quantity of refrigerant twice a year.

After storage

NOTICE

If the machine is to be used when the monthly rust prevention operation has not been carried out, please contact your Komatsu distributor.

When using the machine after long-term storage, do as follows before using it.

- Wipe off the grease from the hydraulic cylinder rods.
- Add oil and grease to all places.
- When a machine is stored for a long period, moisture in the air will get into the oil. Check the oil before and after starting the engine. If there is water in the oil, change the oil.

https://truckmanualshub.com/

Troubleshooting

When machine runs out of fuel

WARNING

When starting the engine again, check carefully that the area around the engine is safe before cranking the engine.

When starting the engine after running out of fuel, fill with fuel and bleed the air from the fuel system before starting.
For details of bleeding the air, see “Replace fuel filter cartridge on page 4-48“.

Towing the machine

WARNING

- **Check that the wire rope is of ample strength for the weight of the machine being towed.**
- **Do not apply a load to the wire rope suddenly.**
- **If there is a failure in the brake line, the brakes cannot be used, so be extremely careful when towing.**

NOTICE

- **Towing is for moving the machine to a place where inspection and maintenance can be carried out, and not for moving it long distances.**
- **The machine must not be towed for long distances.**
- **For details of the procedure for towing a machine when it has broken down, please contact your Komatsu distributor.**

This machine must not be towed except in emergencies. When towing the machine, take the following precautions.

- Before releasing the brakes, put blocks under the wheels to prevent the machine from moving. If the wheels are not blocked, the machine may suddenly move.
- When towing a machine, tow it at a low speed of less than 2 km/h (1.2 MPH), and for a distance of a few meters to a place where repairs can be carried out. The machine should be towed only in emergencies. If the machine must be moved long distances, use a transporter.
- To protect the operator if the towing rope or bar should break, install a protector plate to the machine being towed.
- If it is impossible to operate the steering and brakes of the machine being towed, do not let anyone ride on the machine.
- Check that the tow rope or bar is of ample strength for the weight of the machine being towed. If the machine being towed must travel through mud or up hills, use a tow rope or bar of a strength of at least 1.5 times the weight of the machine being towed.
- Keep the angle of the tow rope as small as possible. Keep the angle between the center lines of the two machines to within 30 degrees.
- If the machine is moved suddenly, the tow rope or bar will be subjected to an excessive load, and it may break. Start the machine gradually and travel at a constant speed.
- The towing machine should normally be of the same class as the machine being towed. Check that the towing machine has ample braking power, weight, and rimpull to allow it to control both machines on slopes or on the tow road.
- When towing a machine downhill, use a larger machine for towing to provide ample rimpull and braking power, or connect another machine to the rear of the machine being towed. This way it is possible to prevent the machine from losing control and turning over.
- Towing may be carried out under various differing conditions, so it is impossible to determine beforehand the requirements for towing. Towing on flat horizontal roads will require the minimum rimpull, while towing on slopes or on uneven road surfaces will require the maximum rimpull.

https://truckmanualshub.com/

When engine can be used

- If the transmission and steering wheel can be operated, and the engine is running, it is possible to tow the machine out of mud or to move it for a short distance to the edge of the road.
- The operator should sit on the machine being towed and operate the steering in the direction that the machine is towed.

When engine cannot be used

When towing a machine with the engine stopped, use the following procedure.

1. The transfer oil does not lubricate the system, so remove the front and rear drive shafts. If necessary, block the tires to prevent the machine from moving.
2. The steering cannot be operated, so remove the steering cylinder.
   Even if the brakes are in good condition, the brakes can only be used a limited number of times. There is no change in the operating force for the brake pedal, but the braking force is reduced each time the pedal is depressed.
3. Connect the towing equipment securely. When carrying out towing operations, use two machines of at least the same class as the machine being towed. Connect one machine each to the front and rear of the machine being towed, then remove the blocks from the tires and tow the machine.

https://truckmanualshub.com/

If battery is discharged

⚠ WARNING

- **When checking or handling the battery, stop the engine and turn the starting switch key to the OFF position.**
- **The battery generates hydrogen gas, so there is a hazard of explosion. Do not bring lighted cigarettes near the battery, or do anything that will cause sparks.**
- **Battery electrolyte is dilute sulphuric acid, and it will attack your clothes and skin. If it gets on your clothes or on your skin, immediately wash it off with a large amount of water. If it gets in your eyes, wash it out with fresh water and consult a doctor.**
- **When handling batteries, always wear protective goggles and rubber gloves.**
- **When removing the battery, first disconnect the cable from the ground (normally the negative (-) terminal). When installing, install the positive (+) terminal first.**
- **If a tool touches the positive terminal and the chassis, there is danger that it will cause a spark, so be extremely careful.**
- **If the terminals are loose, there is danger that the defective contact may generate sparks that will cause an explosion.**
- **When removing or installing the terminals, check which is the positive (+) terminal and which is the negative (-) terminal.**

When removing, disconnect the cable from the ground terminal first

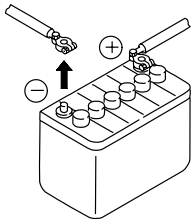

When installing, connect the cable to the positive (+) terminal first

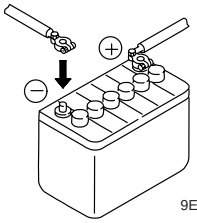

9EA00023A

Removal and installation of battery

1. Before removing battery, remove the ground cable (normally connected to the negetive (-) terminal). If any tool touches between the positive terminal and the chassis, there is danger of sparks being generated. Loosen the of the terminal and remove the wires from the battery.
2. After installing the battery, fix it with the battery fitting securely.
   Tightening torque: 5.9 to 9.8 N·m
   (0.6 to 1.0 kgf·m, 4.3 to 7.2 lbft)
3. When installing the battery, connect the ground cable last.
   Insert the hole of the terminal on the battery and tighten the nut.
   Tightening torque: 5.9 to 9.8 N·m
   (0.6 to 1.0 kgf·m, 4.3 to 7.2 lbft)

REMARK

The batteries are on both sides at the rear of the machine. The battery used for the ground is on the right side of the machine.

https://truckmanualshub.com/

Precautions for charging battery

When charging the battery, if the battery is not handled correctly, there is danger that the battery may explode. Always follow the instructions in “Battery on page 3-104“ and the instruction manual accompanying the charger, and do as follows.

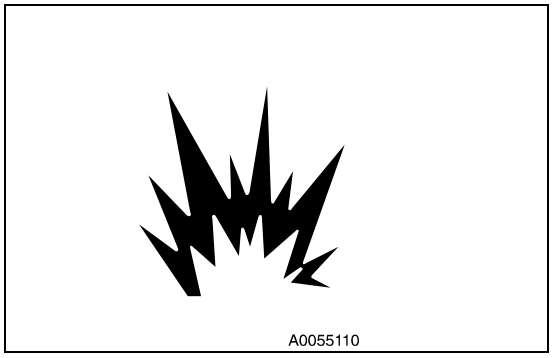

- Do not use or charge the battery if the battery electrolyte level is below the LOWER LEVEL line. This may cause an explosion. Always check the battery electrolyte level periodically and add distilled water to bring the electrolyte level to the UPPER LEVEL line.
- Set the voltage of the charger to match the voltage of the battery to be charged. If the voltage is not selected correctly, the charger may overheat and cause an explosion.
- Connect the positive (+) charger clip of the charger to the positive (+) terminal of the battery, then connect the negative (-) charger clip of the charger to the negative (-) terminal of the battery. Be sure to fix the clips securely.
- Set the charging current to 1/10 of the value of the rated battery capacity; when carrying out rapid charging, set it to less than the rated battery capacity.
  If the charger current is too high, the electrolyte will leak or dry up, and this may cause the battery to catch fire and explode.
- If the battery electrolyte is frozen, do not charge the battery or start the engine with a different power source. There is a hazard that this will ignite the battery electrolyte and cause the battery to explode.

Starting engine with booster cable

When starting the engine with a booster cable, do as follows:

Precautions when connecting and disconnecting booster cable

⚠ WARNING

- **When connecting the cables, never contact the positive (+) and negative (-) terminals.**
- **When starting the engine with a booster cable, always wear safety glasses and rubber gloves.**
- **Be careful not to let the normal machine and problem machine contact each other. This prevents sparks from generating near the battery which could ignite the hydrogen gas given off by the battery.**
- **Make sure that there is no mistake in the booster cable connections. The final connection is to the engine block of the problem machine, but sparks will be generated when this is done, so connect to a place as far as possible from the battery.**
- **When disconnecting the booster cable, take care not to bring the clips in contact with each other or with the machine body.**

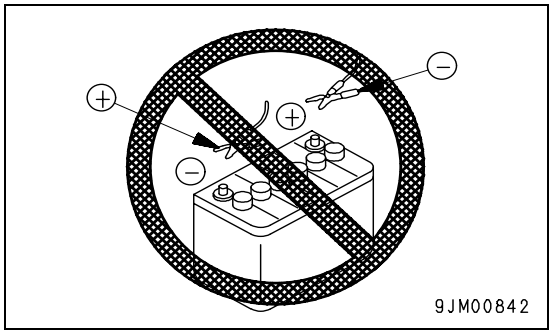

NOTICE

- **The size of the booster cable and clip should be suitable for the battery size.**
- **The battery of the normal machine must be the same capacity as that of the engine to be started.**
- **Check the cables and clips for damage or corrosion.**
- **Make sure that the cables and clips are firmly connected.**
- **Check that the safety lock levers and parking brake levers of both machines are in the LOCK position.**
- **Check that each lever is in the NEUTRAL position.**

https://truckmanualshub.com/

Connecting the booster cable

Keep the starting switch of the normal machine and problem machine at the OFF position.
Connect the booster cable as follows, in the order of the numbers marked in the diagram.

1. Connect one clip of booster cable (A) to the positive (+) terminal of the problem machine.
2. Connect the other clip of booster cable (A) to the positive (+) terminal of the normal machine.
3. Connect one clip of booster cable (B) to the negative (-) terminal of the normal machine.
4. Connect the other clip of booster cable (B) to the engine block of the problem machine.

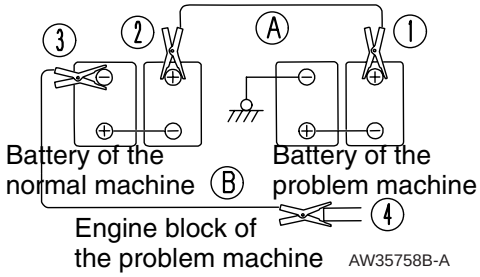

Starting engine

WARNING

Always check that the safety lock lever is set to the LOCK position, regardless of whether the machine is working normally or has failed. Check also that all the control levers are at the HOLD or neutral position.

1. Make sure the clips are firmly connected to the battery terminals.
2. Start the engine of the normal machine and keep it to run at high idling speed.
3. Turn the starting switch of the problem machine to the START position and start the engine.
   If the engine doesn't start at first, wait for at least 2 minutes before trying again.

Disconnecting the booster cable

After the engine has started, disconnect the booster cables in the reverse of the order in which they were connected.

1. Remove one clip of booster cable (B) from the engine block of the problem machine.
2. Remove the other clip of booster cable (B) from the negative (-) terminal of the normal machine.
3. Remove one clip of booster cable (A) from the positive (+) terminal of the normal machine.
4. Remove the other clip of booster cable (A) from the positive (+) terminal of the problem machine.

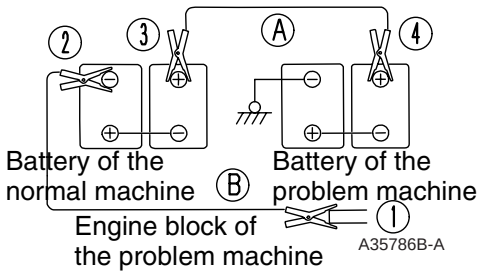

https://truckmanualshub.com/

Other trouble

Electrical system

- ( ): Always contact your Komatsu distributor when dealing with these items.
- In cases of abnormalities or causes which are not listed below, please contact your Komatsu distributor for repairs.

Problem	Main causes	Remedy
Lamp does not glow brightly even when the engine runs at high speed Lamp flickers while engine is running	•Defective wiring •Defective adjustment of belt tension	(•Check, repair loose terminals, disconnections) •Check, Adjust fan belt tension For details, see "Every 1000 hours service on page 4-50".
Even when the engine is rotating, the charge caution pilot lamp does not go out	•Defective alternator •Defective wiring •Defective adjustment of fan belt tension	(•Replace) (•Check, repair) •Check, Adjust fan belt tension For details, see "Every 1000 hours service on page 4-50".
Abnormal noise is generated from alternator	•Defective alternator	(•Replace)
Starting motor does not turn when starting switch is turned to ON	•Defective wiring •Insufficient battery charge •Defective starting motor	(•Check, repair) •Charge (•Check, repair)
Pinion of starting motor keeps going in and out	•Insufficient battery charge	•Charge
Starting motor turns engine sluggishly	•Insufficient battery charge •Defective starting motor	•Charge (•Replace)
Starting motor disengages before engine starts	•Defective wiring •Insufficient battery charge	(•Check, repair) •Charge
Preheating pilot lamp does not light up	•Defective wiring •Defective heater relay, preheating water temperature sensor •Defective preheating pilot lamp	(•Check, repair) (•Replace) (•Replace)
Even when engine is stopped, charge caution pilot lamp does not light up (starting switch at ON position)	•Defective wiring •Defective monitor	(•Check, repair) (•Replace)
Even when engine is stopped, engine oil pressure caution pilot lamp does not light up (starting switch at ON position)	•Defective pilot lamp •Defective pilot lamp switch •Defective monitor	(•Replace) (•Replace) (•Replace)

https://truckmanualshub.com/

Chassis

- ( ): Always contact your Komatsu distributor when dealing with these items.
- In cases of abnormalities or causes which are not listed below, please contact your Komatsu distributor for repairs.

Problem	Main causes	Remedy
HST		
Engine is running but machine does not move	•Parking brake is applied •Directional lever is not shifted properly •No electricity is flowing to directional lever (electrical type) •Lack of oil in hydraulic tank	•Release parking brake •Shift lever properly •Check fuse and wiring harness connector •Add oil to specified level. See "Every 100 hours service on page 4-39".
Even when engine is run at full throttle, machine only moves slowly and lacks power	•Lack of oil in hydraulic tank •Hydraulic oil temperature is low	•Add oil to specified level. See "Every 100 hours service on page 4-39". •Carry out warming-up operation
Oil overheats	•Too much oil or too little oil •Clogged oil cooler core	•Add or drain oil to specified level. See "When required on page 4-20". •Clean oil cooler core
Noise generated	•Lack of transfer oil	•Add oil to specified level. See "When required on page 4-20".
Axle		
Noise generated	•Lack of oil •Improper oil used (for machines with limited-slip differential)	•Add oil to specified level. See "When required on page 4-20". •Change to specified oil
Brake		
Brake is not applied when pedal is depressed	•Disc has reached wear limit •Defective hydraulic system · Lack of oil · Air in brake line	(•Replace disc) •Add oil to specified level. See "Every 100 hours service on page 4-39". •Bleed air. See "When required on page 4-20".
Brake drags or not applied	•Defective adjustment of brake pedal linkage •Vent hole of brake valve is clogged	(•Check, repair) (•Replace) •Clean
Brakes squeal	•Disc is worn •Large amount of water in axle oil •Deteriorated axle oil due to over-use of brake	(•Replace disc) •Change axle oil •Change axle oil

https://truckmanualshub.com/

Problem	Main causes	Remedy
Parking brake		
Poor braking effect	•Linkage is loose •Disc is worn	•Adjust (•Replace disc)
Steering		
Steering wheel is heavy	•Defective hydraulic system •Lack of oil	•Add oil to specified level. See "Every 100 hours service on page 4-39".
There is play in steering wheel	•Steering cylinder pin is loose •Defective hydraulic system •Lack of oil	•Grease bearing. Or replace pin and bushing where there is play •Add oil to specified level. See "Every 100 hours service on page 4-39".
Hydraulic system		
Bucket lacks lifting power Bucket takes time to go up	•Lack of oil •Clogged hydraulic filter	•Add oil to specified level. See "Every 100 hours service on page 4-39". •Replace cartridge, see "Every 2000 hours service on page 4-54".
Excessive bubbles in oil	•Poor quality oil •Lack of oil •Air entering oil line	•Replace with good quality oil •Add oil to specified level. See "Every 100 hours service on page 4-39". •Bleed air. See "Every 2000 hours service on page 4-54".
Lack of oil pressure	•Lack of oil causes pump to suck in air	•See "Every 100 hours service on page 4-39" for details of adding oil, then see "Every 2000 hours service on page 4-54" for details of bleeding air
Irregular movement of cylinder	•Lack of oil	•Add oil to specified level. See "Every 100 hours service on page 4-39".

https://truckmanualshub.com/

Engine

- ( ): Always contact your Komatsu distributor when dealing with these items.
- In cases of abnormalities or causes which are not listed below, please contact your Komatsu distributor for repairs.

Problem	Main causes	Remedy
Engine oil pressure caution pilot lamp lights up	•Low engine oil pan oil level (sucking in air) •Clogged oil filter cartridge •Defective tightening of oil pipe joint, oil leakage from damaged part •Defective monitor	•Add oil to specified level, see "Check before starting on page 4-37". •Replace cartridge, see "Every 500 hours service on page 4-47". (•Check, repair) (•Replace)
Steam is emitted from top part of radiator (pressure valve) Water temperature gauge is in red range Coolant temperature monitor lights up	•Low cooling water level •Defective fan pump motor •Dirt or scale accumulated in cooling system •Clogged radiator fin or damaged fin •Defective thermostat •Loose radiator filler cap (high altitude operation) •Defective monitor	•Check, add cooling water, repair, see "When required on page 4-20". (•Check, repair) •Change cooling water, clean inside of cooling system, see "When required on page 4-20". •Clean or repair, see "When required on page 4-20". (•Replace thermostat) •Tighten cap or replace packing (•Replace)
Water temperature gauge is in white range on left	•Defective thermostat •Defective monitor	(•Replace thermostat) (•Replace)
Engine does not start when starting motor is turned	•Lack of fuel •Air in fuel system •No fuel in fuel filter •Defective injection pump or nozzle •Starting motor cranks engine too slowly •Starting motor does not turn •Preheating pilot lamp does not light up •Defective valve clearance (Defective compression)	•Add fuel, see "Check before starting on page 4-37". •Repair place where air is sucked in •Fuel filter with fuel. See "Every 500 hours service on page 4-47". (•Replace pump or nozzle) •See "Electrical system on page 3-112". •See "Electrical system on page 3-112". •See "Electrical system on page 3-112". (•Adjust valve clearance)
Exhaust gas is white or blue	•Too much oil in oil pan •Improper fuel	•Add oil to specified level, see "Check before starting on page 4-37". •Change to specified fuel

https://truckmanualshub.com/

Problem	Main causes	Remedy
Exhaust gas occasionally turns black	•Clogged air cleaner element •Defective nozzle •Defective compression	•Clean or replace, see "When required on page 4-20". (•Replace nozzle) (•See defective compression above)
Combustion noise occasionally makes breathing sound	•Defective nozzle	(•Replace nozzle)
Abnormal noise generated (combustion or mechanical)	•Low grade fuel being used •Overheating •Damage inside muffler •Excessive valve clearance	•Change to specified fuel •Refer to “Water temperature gauge is in red range“ as above (•Replace muffler) (•Adjust valve clearance)

https://truckmanualshub.com/

MAINTENANCE

⚠ WARNING

Please read and make sure that you understand the safety volume before reading this section.

https://truckmanualshub.com/

Guides to maintenance

Do not carry out any inspection and maintenance operation that is not found in this manual.

Check service meter

Check the service meter reading every day to see if the time has come for any necessary maintenance to be carried out.

KOMATSU genuine replacement parts

Use Komatsu genuine parts specified in the Parts Book as replacement parts.

KOMATSU genuine oils

Use Komatsu genuine oils and grease. Choose oils and grease with proper viscosities specified for ambient temperature.

Always clean washer fluid

Use automobile window washer fluid, and be careful not to let any dirt get into it.

Always use clean oil and grease

Use clean oil and grease. Also, keep the containers of the oil and grease clean. Keep foreign materials away from oil and grease.

Checking for foreign materials in drained oil and on filters

After oil is changed or filters are replaced, check the old oil and filters for metal particles and foreign materials. If large quantity of metal particles or foreign materials are found, always report to the person in charge, and carry out suitable action.

Fuel strainer

Do not remove the strainer from the filler port when adding fuel.

Welding instructions

- Turn off the engine starting switch.
- Do not apply more than 200V continuously.
- Connect grounding cable within 1m (3.3 ft) from the area to be welded. If grounding cable is connected near instruments, connectors, etc., the instruments may malfunction.
- If a seal or bearing happen to come between the welding part and grounding point, change the grounding point to avoid such parts.
- Do not use the area around the work equipment pins or the hydraulic cylinders as the grounding point.

Do not drop things inside machine

- When opening inspection windows or the oil filler port of the tank to carry out inspection, be careful not to drop nuts, bolts, or tools inside the machine.
  If such things are dropped inside the machine, it will cause damage and malfunction of the machine, and will lead to failure. If you drop anything inside the machine, always remove it immediately.
- Do not put unnecessary things in your pockets. Carry only things which are necessary for inspection.

Dusty worksites

When working at dusty worksites, do as follows:

- Inspect the dust indicator frequently to see if the air cleaner is dirty or clogged.
- Clean the radiator core frequently to avoid clogging.
- Clean and replace the fuel filter frequently.
- Clean electrical components, especially the starting motor and alternator, to avoid accumulation of dust.
- When inspecting or changing the oil, move the machine to a place that is free of dust to prevent dirt from getting into the oil.

Avoid mixing oil

If a different type of oil has to be added, drain the old oil and replace all the oil with the new type of oil. Never mix different kinds of oil.

https://truckmanualshub.com/

Locking inspection covers

Lock inspection cover in position securely with the lock bar. If inspection or maintenance is carried out with the inspection cover not locked in position, there is a hazard that it may be suddenly blown shut by the wind and cause injury to the worker.

Bleeding air from hydraulic circuit

If the hydraulic oil equipments have been repaired or replaced and if the hydraulic hoses, pipes, etc. have been disconnected, it is necessary to bleed air in the circuit. See “Change oil in hydraulic tank, replace hydraulic filter element on page 4-54“.

Precautions when installing hydraulic hoses

- When removing parts at locations where there are O-rings or gasket seals, clean the mounting surface, and replace with new parts.
  When doing this, be careful not to forget to assemble the O-rings and gaskets.
- When installing the hoses, do not twist them or bend them into loops with a small radius.
  This will cause damage to the hose and markedly reduce its service life.

Checks after inspection and maintenance

If you forget carrying out the checks after inspection and maintenance, unexpected problems may occur, and this may lead to serious injury or property damage. Always do as follows.

- Checks after operation (with engine stopped)
  - Have any inspection and maintenance points been forgotten?
  - Have all inspection and maintenance items been carried out correctly?
  - Have any tools or parts been dropped inside the machine? It is particularly dangerous if parts are dropped inside the machine and get caught in the lever linkage mechanism.
  - Is there any leakage of water or oil? Have all the bolts been tightened?
- Check when the engine is running
  - See “Two workers for maintenance when engine is running on page 2-30“ in the section on safety for checking when the engine is running. Pay attention to safety.
    - Check if the inspected and maintenance area is operating normally.
      - Increase the engine speed to check for the fuel and oil leakage.

https://truckmanualshub.com/

Outlines of service

Handling oil, fuel, coolant and performing oil clinic

Oil

- Oil is used in the engine and work equipment under extremely severe conditions (high temperature, high pressure), and deteriorates with use.
  Always use oil that matches the grade and temperature for use given in the Operation and Maintenance Manual.
  Even if the oil is not dirty, always change the oil after the specified interval.
- Oil corresponds to blood in the human body, so always be careful when handling it to prevent any impurities (water, metal particles, dirt, etc.) from getting in.
  The majority of problems with machines are caused by the entry of such impurities.
  Take particular care not to let any impurities get in when storing or adding oil.
- Never mix oils of different grades or brands.
- Always add the specified amount of oil.
  Having too much oil or too little oil are both causes of problems.
- If the oil in the work equipment is not clear, there is probably water or air getting into the circuit. In such cases, please contact your Komatsu distributor.
- When changing the oil, always replace the related filters at the same time.
- We recommend you have an analysis made of the oil periodically to check the condition of the machine. For those who wish to use this service, please contact your Komatsu distributor.

Fuel

- The fuel pump is a precision instrument, and if fuel containing water or dirt is used, it cannot work properly.
- Be extremely careful not to let impurities get in when storing or adding fuel.
- Always use the fuel specified in the Operation and Maintenance Manual.
  Fuel may congeal depending on the temperature when it is used (particularly in low temperature below -15°C (5°F)). It is necessary to use the fuel that is suitable for the temperature.
- To prevent the moisture in the air from condensing and forming water inside the fuel tank, always fill the fuel tank after completing the day's work.
- Before starting the engine, or when 10 minutes have passed after adding fuel, drain the sediment and water from the fuel tank.
- If the engine runs out of fuel, or if the filters have been replaced, it is necessary to bleed the air from the circuit.

Coolant

- River water contains large amount of calcium and other impurities, so if it is used, scale will stick to the engine and radiator, and this will cause defective heat exchange and overheating.
  Do not use water that is not suitable for drinking.
- When using antifreeze, always observe the precautions given in the Operation and Maintenance Manual.
- This antifreeze is also effective in preventing corrosion on the parts of the engine cooling system. It may be continuously used for two years or 4000 hours of operation, therefore it may be used throughout the year.
- Antifreeze is flammable, so be extremely careful not to expose it to flame or fire.
- The proportion of antifreeze to water differs according to the ambient temperature.
  For details of the mixing proportions, see “Clean inside of cooling system on page 4-24“.
- If the engine overheats, wait for the engine to cool before adding coolant.
- If the coolant level is low, it will cause overheating and will also cause problems with corrosion from the air in the coolant.

Grease

- Grease is used to prevent twisting and noise at the joints.
- The nipples not included in the maintenance section are nipples for overhaul, so they do not need grease.
  If any part becomes stiff after being used for long time, add grease.
- Always wipe off all of the old grease that is pushed out when greasing.
  Be particularly careful to wipe off the old grease in places where sand or dirt sticking in the grease would cause wear of the rotating parts.

https://truckmanualshub.com/

Carrying out KOWA (Komatsu Oil Wear Analysis)

KOWA is a maintenance service that makes it possible to prevent machine failures and downtime. With KOWA, the oil is periodically sampled and analyzed. This enables early detection of wear of the machine drive parts and other abnormalities.
Periodic use of KOWA makes the following possible:

- It enables abnormalities to be detected early, leading to reduction of repair costs and machine downtime.
- It enables repair schedules to be planned, leading to improved machine availability.

KOWA analysis items

- Analysis of metal wear particles
  This uses an ICP (Inductively Coupled Plasma) analyzer to measure the density of metal wear particles in the oil.

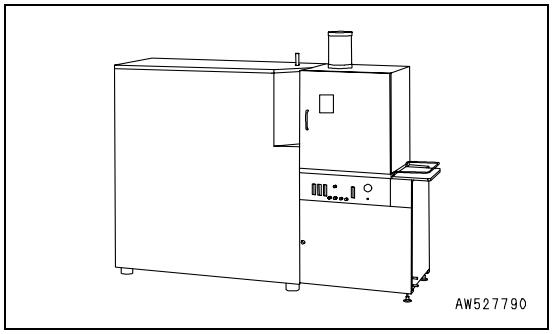

- Measurement of particle quantity
  This uses a PQI (Particle Quantifier Index) measurer to measure the quantity of large iron particles in the oil.

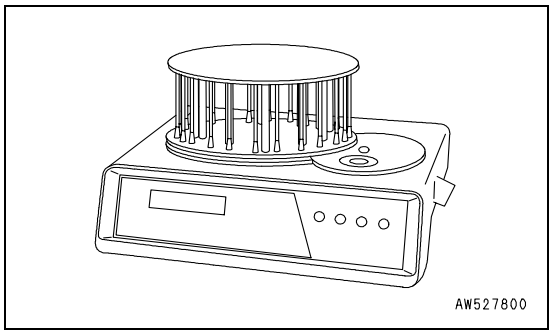

- Others
  Measurements are made of items such as the ratio of water or fuel in the oil, and the dynamic viscosity.

Oil sampling

- Sampling interval
  250 hours: Engine
  500 hours: Other components
- Precautions when sampling
  - Make sure that the oil is well mixed before sampling.
  - Carry out sampling regularly at fixed intervals.
  - Do not carry out sampling on rainy or windy days when water or dust can get into the oil.

For further details of KOWA, please contact your Komatsu distributor.

Storing oil and fuel

- Keep indoors to prevent any water, dirt, or other impurities from getting in.
- When keeping drum cans for a long period, put the drum on its side so that the filler port of the drum can is at the side to prevent moisture from being sucked in.
  If drum cans have to be stored outside, cover them with a waterproof sheet or take other measures to protect them.
- To prevent any change in quality during long-term storage, be sure to use in the order of first in - first out (use the oldest oil or fuel first).

https://truckmanualshub.com/

Filters

- Filters are extremely important safety parts. They prevent impurities in the fuel and air circuits from entering important equipment and causing problems.
  Replace all filters periodically. For details, see the Operation and Maintenance Manual.
  However, when working in severe conditions, replace the filters at shorter intervals according to the oil and fuel (sulfur content) being used.
- Never try to clean the filters (cartridge type) and use them again. Always replace with new filters.
- When replacing oil filters, check if any metal particles are affixed to the old filter. If any metal particles are found, please contact your Komatsu distributor.
- Do not open packs of spare filters until just before they are to be used.
- Always use Komatsu genuine filters.

Biodegradable hydraulic oil and lubricants

The use of biodegradable hydraulic oils and lubricants - on the basis of synthetic esters - for Komatsu machines is permitted. For information on the products cleared for use and best suited for your application contact our authorized service workshops.

Outline of electric system

- It is extremely dangerous if the electrical equipment becomes wet or the covering of the wiring is damaged. This will cause an electrical short circuit and may lead to malfunction of the machine. Do not wash the inside of the operator's cab with water. When washing the machine, be careful not to let water get into the electrical components.
- Service relating to the electric system is checking fan belt tension, checking damage or wear in the fan belt and checking battery fluid level.
- Never install any electric components other than those specified by Komatsu.
- External electro-magnetic interference may cause malfunction of the control system controller, so before installing a radio receiver or other wireless equipment, please contact your Komatsu distributor.
- When working at the seashore, carefully clean the electric system to prevent corrosion.
- The optional power source must never be connected to the fuse, starting switch, or battery relay.

https://truckmanualshub.com/

Wear parts

Replace wear parts such as the filter element or air cleaner element at the time of periodic maintenance or before they reach the wear limit. The wear parts should be replaced correctly in order to ensure more economic use of the machine. When replacing parts, always use Komatsu genuine parts.
As a result of our continuous efforts to improve product quality, the part number may change, so inform your Komatsu distributor of the machine serial number and check the latest part number when ordering parts.

Wear parts list

The parts in parentheses are to be replaced at the same time.
*: See Part No. in Parts Book.

Item		Part No.	Part Name	Q'ty	Replacement frequency
Engine oil filter		*	Cartridge	1	EVERY 500 HOURS
Fuel filter		*	Cartridge	1	EVERY 500 HOURS
HST filter		*	Cartridge	1	EVERY 1000 HOURS
Transfer strainer		*	O-ring	1	EVERY 1000 HOURS
Hydraulic filter		*	Cartridge	1	EVERY 2000 HOURS
Hydraulic tank breather		*	Element	1	EVERY 2000 HOURS
Air cleaner		*	Element ass'y	1	-
Air conditioner filter	fresh	*	Element	1	EVERY 2000 HOURS
	recirc	*	Element	2	EVERY 2000 HOURS
Bolt on cutting edge (if equipped)		*	Center edge Side edge (Bolt) (Nut) (Washer)	1 2 (8) (8) (8)	-
Electrical intake airheater		*	Gasket	2	-

https://truckmanualshub.com/

Fuel, coolant and lubricants

Lubrication chart

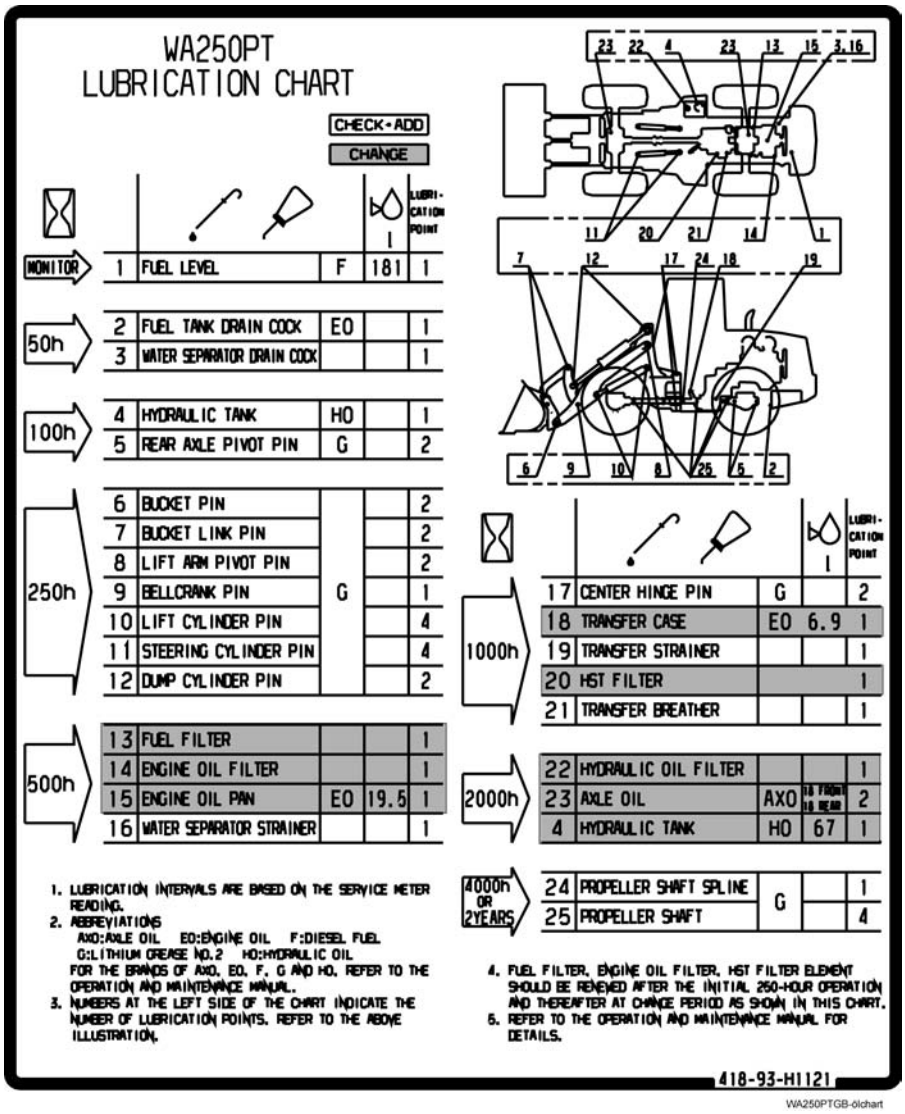

- Lubrication intervals are based on the service meter reading.
- Abbreviations:
  EO = Engine Oil, G = Lithium Grease No. 2,
  F = Diesel Fuel, AXO = Axle Oil,
  HO = Hydraulic Oil.
- Numbers at the left side of the chart indicate the number of lubrication points. Refer to the above illustration.
- Items marked * should be performed in the first service for new machines after 250 hour driving.

https://truckmanualshub.com/

Proper selection of fuel, coolant and lubricants

WA250PT-5H	LUBRICANTS, FUELS AND FILLING CAPACITIES					
	Lubricant and operating medium	Short code cask lettering	Quality grade	Temperature range	Viscosity range	Filling capacitiy in litres
Engine	Engine oil	EO 0030A EO 0540A EO 10 EO 30 EO 1030A EO 1540A	CCMC D4 or, if not available: API CD or API CE or API CF -4	-30° up to 40° C -25° up to 40° C -20° up to 10° C 0° up to 40° C -20° up to 40° C - 15° up to 50° C	SAE 0W-30 SAE 5W-40 SAE 10 SAE 30 SAE 10W-30 SAE 15W-40 *)	20 (19,5 **)
Transfer case	Engine oil	EO 10	CCMC D4 or, if not available: API CD or API CE or API CF -4	-30° up to 40° C	SAE 10W*)	7,7 (6,9 **)
Hydraulic system	Hydraulic oil	HYD 0530	HVLP, HVLP D	-30° up to 40° C	ISO VG46 *) (1)	135 (67**)
Axle with standard differential	Axle oil	AXO 80 (*3) AXO	Fuchs: RENOGEAR HYDRA ZF 20W-40	-30° up to 40°C -10° up to 45° C	80W SAE 20W-40 *)	each 18 (each 18**)
	or Engine oil	EO 30	CCMC D4 or, if not available: API CD or API CE or API CF -4	0° up to 40° C	SAE 30	
Axle with limited-slip differential (*4)	Axle oil	AXO	Shell: DONAX TD 5W30*** Esso: TORQUE FLUID56*** Mobil: MOBILFLUID 424 Fuchs: RENOGEAR HYDRA ZF20W40		SAE 5W-30 SAE 20W-40*)	
Fuel tank	Diesel fuel	ASTM D975 No.1 ASTM D975 No.2 DIN-EN 590	CFPP class B CFPP class D CFPP class F	-30° up to -10° C -10° up to 40° C 0° up to 40° C -10° up to 40° C -20° up to 40° C	-----	184
Grease nippels	Multi purpose grease on a lithium base	MPG-A	KP2N-20	-30° up to 40° C	NLGI-No. 2	---
Grease box of central lubrication unit	Multi purpose grease on a lithium base	MPG-A	KP2N-20	-30° up to 40° C	NLGI-No. 2	---
Cooling system	Water and coolant	SP-C	Add antifreeze with corrosion resistor			19
Air conditioner	Coolant	NRS	R134a (CFC-free)			860 g

* Work filling
** Top-up quantity
*** North American manufacted DONAX TD 20W-40 must not be used.
**** North American manufacted TORQUE FLUID 56 must not be used.

(1): Please use SAE10W30 for the oil in the hydraulic system. If Komatsu genuine oil is not available, select the oil from the table below.

Supplier	Engine oil (The 15W40 oil marked * is CE.)
BP	Vanellus C3 (15W40)
EXXON(ESSO)	Essolube D3, *Essolube XD-3, *Essolube XD-3 Extra, *Essolube heavy duty, Exxon heavy duty
GULF	Super duty motor oil, *Super duty plus
MOBIL	Delvac 1300, *Delvac super (10W-30, 15W-40)
SHELL	Rimura X, Rotella T 10W30

https://truckmanualshub.com/

*1 :ASTM D975 No.1
*2 : Use only diesel fuel.
*3: For the standard differential, except for “AXO80“, the oil for machines equipped with the limited-slip differential in the table below and E030 can be used. However, in the case of “E030“, depending on conditions such as the way the brakes are used and the oil temperature, the brakes may squeal just before the machine stops, but there is no problem with the brake performance or durability.
*4: The letters “ASD“ are stamped on the name plate of machines equipped with the limited-slip differential axle.
*5: For machines equipped with the limited-slip differential axle, select from the oil given in the table below. Never use any oil except the oil listed in the table below.

Maker	Brand	Remarks
SHELL	DONAX TD 5W-30	North American manufactured DONAX TD 20W-40 must not be used
ESSO	TORQUE FLUID 56	North American manufactured must not be used
MOBIL	MOBILFLUID 424	
FUCHS	RENOGEAR HYDRA ZF 20W-40	

REMARK

- **When fuel sulphur content is less than 0.5%, change oil in the oil pan according to the periodic maintenance hours described in this manual.**
- **Change oil according to the following table if fuel sulphur content is above 0.5%.**
- **When starting the engine with an atmospheric temperature of lower than 0°C (32°F), be sure to use engine oil of SAE10W, SAE10W-30 and SAE15W-40, even though the atmospheric temperature goes up to 10°C (50°F) more or less during the day.**
- **Use API classification CD as engine oil and if API classification CC, reduce the engine oil change interval to half.**
- **There is no problem if single grade oil is mixed with multigrade oil (SAE10W-30, 15W-40), but be sure to add single grade oil that matches the temperature range in the table.**
- **We recommend Komatsu genuine oil which has been specifically formulated and approved for use in engine and hydraulic work equipment applications.**

Specified capacity: Total amount of oil including oil for components and oil in piping.

Refill capacity: Amount of oil needed to refill system during normal inspection and maintenance.

ASTM: American Society of Testing and Material
SAE: Society of Automotive Engineers
API: American Petroleum Institute

Fuel sulphur content	Change interval of oil in engine oil pan
0.5 to 1.0%	1/2 of regular interval
Above 1.0%	1/4 of regular interval

https://truckmanualshub.com/

No.	Supplier	Engine Oil [CD or CE] SAE10W, 30, 40 10W30, 15W40 (The 15W40 oil marked * is CE.)	Gear Oil [GL-4 or GL-5] SAE80, 90, 140	Grease [Lithium-Base] NLGI No.2	Antifreeze Coolant [Ethylene Glycol Base] Permanent Type
1	KOMATSU	EO10-CD EO30-CD EO10-30CD EO15-40CD	GO90 GO140	G2-LI G2-LI-S	AF-ACL AF-PTL AF-PT(Winter, one season type)
2	AGIP	Diesel sigma S super dieselmulti-grade *Sigma turbo	Rotra MP	GR MU/EP	-
3	AMOCO	*Amoco 300	Multi-purpose gear oil	PYKON premium grease	-
4	ARCO	*Arcofleet S3 pius	Arco HD gear oil	Litholine HEP 2 Arco EP moly D	-
5	BP	Vanellus C3	Gear oil EP Hypogear EP	Energrease LS-EP2	Antifreeze
6	CALTEX	*RPM delo 400 RPM delo 450	Universal thuban Universal thuban EP	Marfak all purpose 2 Ultra-duty grease 2	AF engine cool-ant
7	CASTROL	*Turbomax *RX super CRD	EP EPX Hypoy Hypoy B Hypoy C	MS3 Spheerol EPL2	Antifreeze
8	CHEV-RON	*Delo 400	Universal gear	Ultra-duty grease 2	-
9	CONOCO	*Fleet motor oil	Universal gear lubricant	Super-sta grease	-
10	ELF	Multiperformance 3C Performance 3C	-	Tranself EP Tranself EP type 2	Glacelf
11	EXXON (ESSO)	Essolube D3 *Essolube XD-3 *Essolube XD-3 Extra *Esso heavy duty Exxon heavy duty	Gear oil GP Gear oil GX	Beacon EP2	All season cool-ant
12	GULF	Super duty motor oil *Super duty plus	Multi-purpose gear lubricant	Gulfcrown EP2 Gulfcrown EP special	Antifreeze and coolant
13	MOBIL	Delvac 1300 *Delvac super 10W-30, 15W-40	Mobilube GX Mobilube HD	Mobilux EP2 Mobilgease 77 Mobilgrease special	-

https://truckmanualshub.com/

No.	Supplier	Engine Oil [CD or CE] SAE10W, 30, 40 10W30, 15W40 (The 15W40 oil marked * is CE.)	Gear Oil [GL-4 or GL-5] SAE80, 90, 140	Grease [Lithium-Base] NLGI No.2	Antifreeze Coolant [Ethylene Glycol Base] Permanent Type
14	PEN-NZOIL	*Supreme duty fleet motor oil	Multi-purpose 4092 Multi-purpose 4140	Multi-purpose white grease 705 707L White-bearing grease	Antifreeze and summer coolant
15	PETRO-FINE	FINA kappa TD	FINA potonic N FINA potonic NE	FINA marson EPL2	FINA tamidor
16	SHELL	Rimura X	Spirax EP Spirax heavy duty	Albania EP grease	-
17	SUN	-	Sunoco GL5 gear oil	Sunoco ultra prestige 2EP Sun prestige 742	Sunoco anti-freeze and summer coolant
18	TEXACO	*Ursa super plus Ursa premium	Multigear	Multifak EP2 Starplex 2	Coda 2055 star-tex antifreeze cool-ant
19	TOTAL	Rubia S *Rubia X	Total EP Total Transmission TM	Multis EP2	Antigal/antifreeze
20	UNION	*Guardol	MP gear lube LS	Unoba EP	-
21	VEEDOL	*Turbostar *Diesel star MDC	Multigear Multigear B Multigear C	-	Antifreeze

https://truckmanualshub.com/

Standard tightening torques for bolts and nuts

Torque list

CAUTION

If nuts, bolts, or other parts are not tightened to the specified torque, it will cause looseness or damage to the tightened parts, and this will cause failure of the machine or problems with operation.
Always pay careful attention when tightening parts.

Unless otherwise specified, tighten the metric nuts and bolts to the torque shown in the table below.
If it is necessary to replace any nut or bolt, always use a Komatsu genuine part of the same size as the part that was replaced.

Thread diameter of bolt (a) (mm)	Width across flats (b) (mm)	Tightening torque					
		Target value			Service limit		
		N·m	kgf·m	lbft	N·m	kgf·m	lbft
6 8 10 12 14	10 13 17 19 22	13. 2 31 66 113 172	1.35 3.2 6.7 11.5 17.5	9.8 23.1 48.5 83.2 126.6	11.8- 14.7 27-34 59-74 98-123 153-190	1.2-1.5 2.8-3.5 6.0-7.5 10.0- 12.5 15.5- 19.5	8.7-10.8 20.3-25.3 43.4-54.2 72.3-90.4 112.1-141
16 18 20 22 24	24 27 30 32 36	260 360 510 688 883	26.5 37 52.3 70.3 90	191.7 267.6 378.3 508.5 651	235-285 320-400 455-565 610-765 785-980	23.5- 29.5 33.0- 41.0 46.5- 58.0 62.5- 78.0 80.0- 100.0	170.0-213.4 238.7-296.6 336.3-419.5 452.1-564.2 578.6-723.3
27 30 33 36 39	41 46 50 55 60	129 5 172 0 221 0 275 0 328 0	132.5 175.0 225.0 280.0 335.0	958.4 1265. 8 1627. 4 2025. 2 2423. 1	1150- 1440 1520- 1910 1960- 2450 2450- 3040 2890- 3630	118.0- 147.0 155.0- 195.0 200.0- 250.0 250.0- 310.0 295.0- 370.0	853.5- 1063.3 1121.1- 1410.4 1446.6- 1808.3 1808.3- 2242.2 2133.7- 2676.2

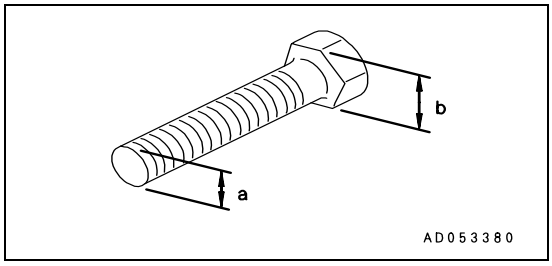

https://truckmanualshub.com/

Apply the following table for hydraulic hose.

Nominal - No. of threads (a)	Width across flats (b) (mm)	Tightening torque					
		Target value			Permissible range		
		N·m	kgf·m	lbft	N·m	kgf·m	lbft
9/16 - 18UNF	19	44	4.5	32.5	35 - 63	3.5 - 6.5	25.3 - 47.0
11/16 - 16UN	22	74	7.5	54.2	54° 93	5.5° 9.5	39.8 - 68.7
13/16 - 16UN	27	103	10.5	75.9	84° 132	8.5° 13.5	61.5 - 97.6
1 -14UNS	32	157	16.0	115.7	128° 186	13.0° 19.0	94.0 - 137.4
13/16 - 12UN	36	216	22.0	159.1	177° 245	18.0° 25.0	130.2 - 180.8

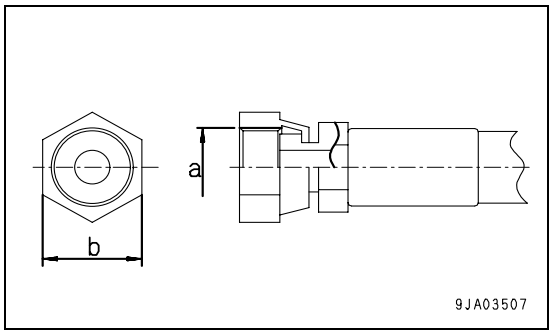

https://truckmanualshub.com/

Periodic replacement of safety critical parts

Safety critical parts

For using the machine safely for an extended period of time, you must periodically replace the safety critical and fire prevention-related parts listed in the table of important parts.

Material quality of these parts can change as time passes and they are likely to wear out or deteriorate. However, it is difficult to determine the extent of wear or deterioration at the time of periodic maintenance. Hence, it is required to replace them with new ones regardless of their condition after a certain period of usage. This is important to ensure that these parts maintain their full performance at all times.

Furthermore, should anything abnormal be found on any of these parts, replace it with a new one even if the periodic replacement time for the part has not yet arrived.

If any of the hose clamps show deterioration like deformation or cracking, replace the clamps at the same time as the hoses.

Also carry out the following checks with hydraulic hoses which need not be replaced periodically. Tighten a loosened clamp or replace a defective hose, as required.
When replacing the hoses, always replace the O-rings, gaskets, and other such parts at the same time.
Ask your Komatsu distributor to replace the critical parts.

https://truckmanualshub.com/

No.	Safety critical parts for periodic replacement	Q'ty	Replacement interval
1	Fuel hose (fuel tank - water separator)	1	Every 2 years or every 4000 hours, whichever comes first
2	Fuel hose (water separator - pump)	1	
3	Fuel return hose (pump - fuel tank)	1	
4	Fuel spill hose (tube - fuel tank)	1	
5	Turbocharger lubricating hose	1	
6	Steering hose (pump - priority valve)	1	
7	Steering hose (priority valve - orbitrol valve)	1	
8	Steering hose (orbitrol valve - steering cylinder)	6	
9	Steering hose (steering cylinder line - cushion valve)	2	
10	Packings, seals, O-rings of steering cylinder	2	
11	Brake hose (gear pump - master cylinder)	1	
12	Brake hose (master cylinder - front brake)	2	
13	Brake hose (master cylinder - rear brake)	2	
14	Brake hose (master cylinder - accumulator)	2	
15	Brake hose (accumulator - charge valve)	2	
16	Brake hose (master cylinder - hydraulic tank)	1	
17	Brake hose (charge valve - hydraulic tank)	1	
18	O-rings and oil seals of brake valve	7	

https://truckmanualshub.com/

Maintenance schedule chart

Service schedule

Initial 250 hours service (only after the first 250 hours)
Replace HST oil filter element 4-52
Replace hydraulic tank filter element 4-54

When required
Check, clean, or replace air cleaner element 4-20
Dust pre-extractor "Turbo II": check, clean 4-23
Clean inside of cooling system 4-24
Check oil level in transfer case, add oil 4-27
Check axle oil level, add oil 4-28
Clean axle case breather 4-29
Clean air conditioner condenser 4-29
Check window washing fluid level, add fluid 4-30
Clean radiator fins and cooler fins 4-30
Clean transfer oil cooler fins 4-31
Check electrical intake air heater 4-31
Replace bolt on cutting edge 4-31
Replace bucket teeth 4-32
Check air conditioner 4-33
Replace slow blow fuse 4-34
Selection and inspection of tires 4-35

Check before starting
Check before starting 4-37

Every 50 hours service
Drain water, sediment from fuel tank 4-38

Every 100 hours service
Lubricate rear axle pivot pin 4-39
Clean element in air conditioner fresh air filter 4-39
Check oil level in hydraulic tank, add oil 4-40

Every 250 hours service
Check battery electrolyte level 4-41
Check parking brake 4-43
Check air conditioner compressor belt tension, adjust 4-43
Check for loose wheel hub bolts, tighten 4-44
Clean element in air conditioner recirculation filter 4-45
Lubricating 4-46

Every 500 hours service
Change oil in engine oil pan, replace engine oil filter cartridge 4-47
Replace fuel filter cartridge 4-48
Clean water separator strainer 4-49

https://truckmanualshub.com/

Every 1000 hours service

Change oil in transfer case 4-50
Clean transfer case breather 4-51
Replace HST oil filter element 4-52
Lubricating 4-53
Check tightening parts of turbocharger 4-53
Check play of turbocharger rotor 4-53
Check alternator driving belt tension and replacement 4-53

Every 2000 hours service

Change oil in hydraulic tank, replace hydraulic filter element 4-54
Replace hydraulic tank breather element 4-55
*Change axle oil 4-56
Replace element in air conditioner recirculation air filter, fresh air filter 4-56
Check alternator, starting motor 4-56
Check engine valve clearance, adjust 4-56
Check brake disc wear 4-57
Clean and check turbocharger 4-57
Check accumulator gas pressure 4-57
Check vibration damper 4-57

*: The interval of 2000 hours for changing the axle oil is for standard operations. If the brake is used frequently or the brakes make a sound, change the oil after a shorter interval.

Every 4000 hours service

Lubricating 4-58
Check water pump 4-58

https://truckmanualshub.com/

Service procedure

Initial 250 hours service (only after the first 250 hours)

Carry out the following maintenance only after the first 250 hours.

- Replace HST filter element
- Replace hydraulic tank filter element

For details of the method of replacing or maintaining, see the section on "Every 1000 hours service on page 4-50" and "Every 2000 hours service on page 4-54".

https://truckmanualshub.com/

When required

Check, clean, or replace air cleaner element

WARNING

- **If inspection, cleaning, or maintenance is carried out with the engine running, dirt will get into the engine and damage it. Always stop the engine before carrying out these operations.**
- **When using compressed air, there is danger that dirt may be blown around and cause serious injury.**
- **Always use safety glasses, dust mask, and other protective equipment.**

Checking

Whenever the red piston in dust indicator (1) appears, clean the air cleaner element.

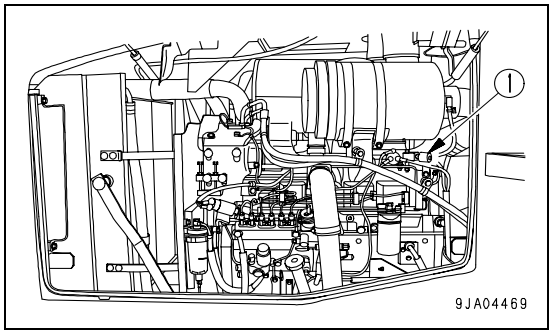

NOTICE

Do not clean the air cleaner element before the dust indicator becomes red.
If the element is cleaned frequently before the dust indicator becomes red, the performance of the air cleaner is diminished and the cleaning effect is lowered. In addition, dust sticking to the element falls into the inner element each time the element is cleaned.

Cleaning outer element

1. Open the engine side cover on the right side of the machine.
2. Remove three clips (2), then remove cover (3).

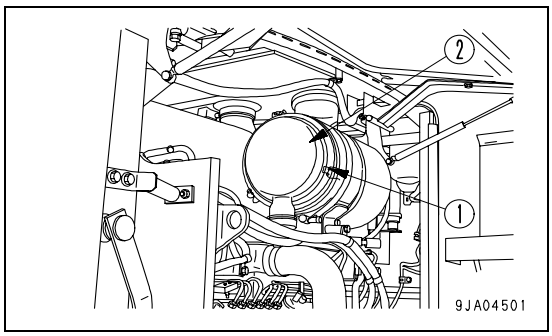

NOTICE

Never remove inner element (5). If it is removed, dust will enter and cause engine trouble.

3. Remove outer element (4).

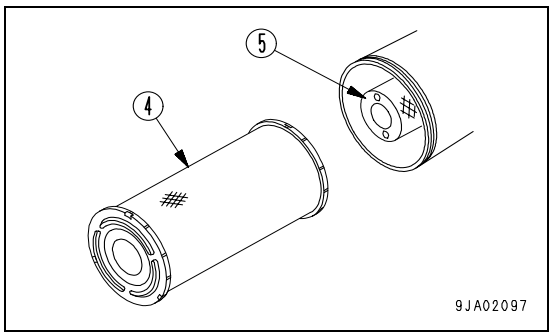

https://truckmanualshub.com/

4. Clean the interior of the air cleaner body, cover (3) and evacuator valve (6).

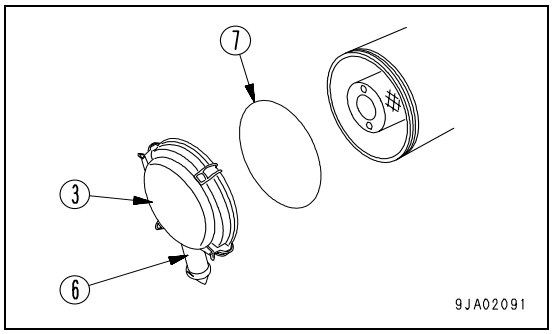

NOTICE
The inner element must not be used again even after its cleaning. When replacing the outer element, replace the outer element at the same time.

5. Direct dry compressed air (Max. 0.69 MPa (7 kgf/cm2, 99.4 PSI)) from the inside of the outer element along its folds. Then direct the compressed air from the outside along the folds, and again from the inside.
   - Replace any outer element, which has been cleaned 6 times or used for one year. Replace the inner element at the same time.
   - Replace both inner and outer elements when the dust indicator red piston appears soon after installing the cleaned outer element even though it has not been cleaned 6 times.
6. If small holes or thinner parts are found on the element when it is checked by shining a light through it after cleaning, replace the element.

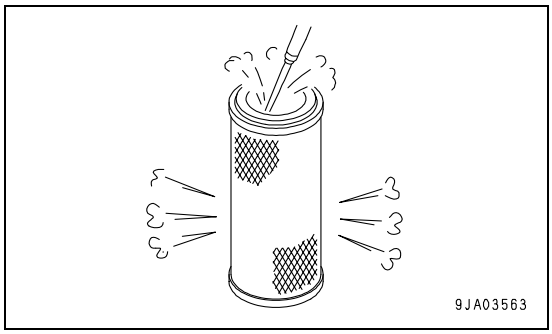

NOTICE
When cleaning the element, do not hit or beat it against anything.
Do not use an element whose folds, gasket or seal are damaged.

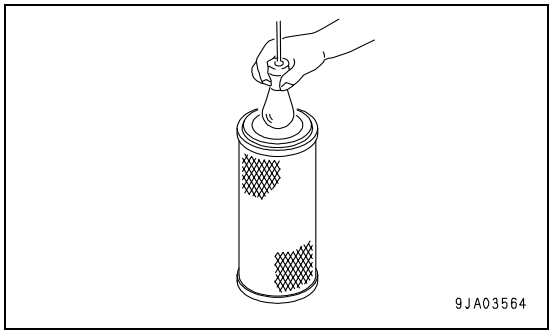

CAUTION

When installing the cover (3), check O-ring (7) and replace it if there are any scratches or damage.

7. Set the cleaned outer element in position, then secure cover (3) with mounting clips (2).
8. Press the button of dust indicator (1) to return the red piston to its original position.

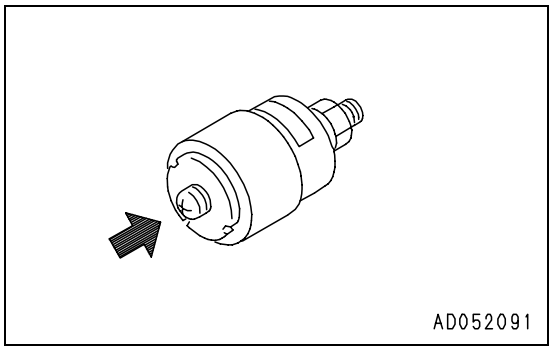

https://truckmanualshub.com/

Replacing element

1. Open the engine side cover on the right side of the machine.
2. Remove three clips (2), then remove cover (3).

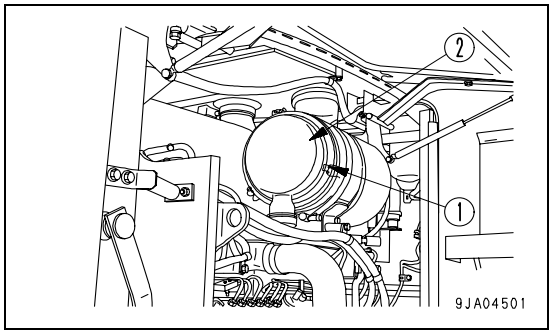

3. Remove outer element (4).
   Do not remove inner element (5) at this time, however.

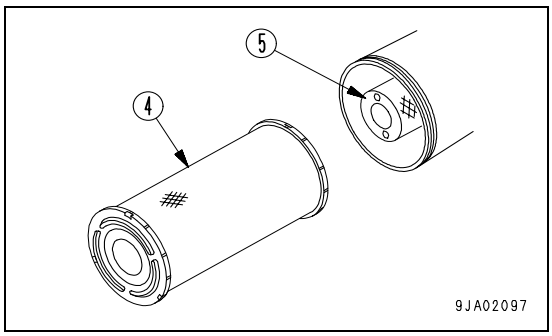

4. Clean the interior of the air cleaner body, cover (3) and evacuator valve (6).

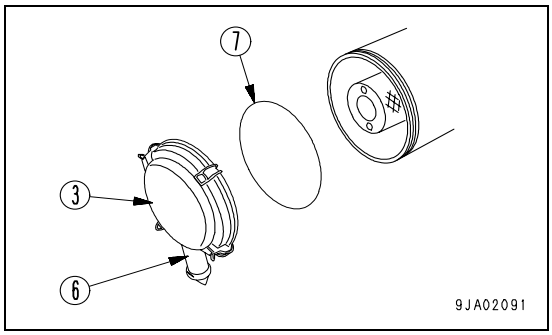

5. Remove inner element (5), then install a new inner element immediately.
6. Fit new outer element (4), replace O-ring (7) with a new part, install cover (3), then secure with clips (2).
7. Return the red piston in the dust indicator (1) to its original position.

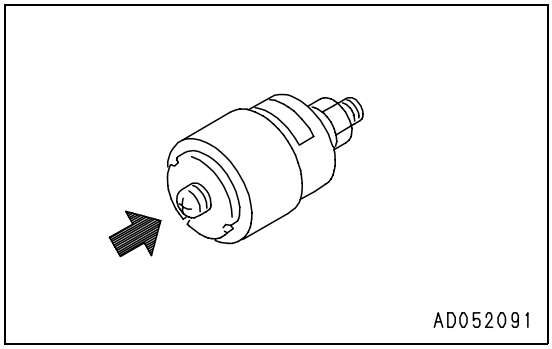

https://truckmanualshub.com/

Dust pre-extractor "Turbo II": check, clean

(This pre-extractor is an optional extra)
The intake screen and the dust extractor gap (at the bottom circumference of the pre-extractor) must always be kept clean.
The pre-extractor should be unscrewed and its condition checked from time to time depending on use. If necessary, blow out the pre-extractor from the inside.

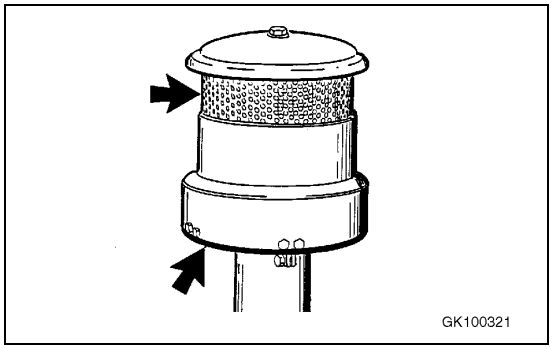

https://truckmanualshub.com/

Clean inside of cooling system

WARNING

- **Immediately after the engine is stopped, the engine coolant is hot and the pressure inside the radiator is high. Removing the cap and draining the water under this condition could cause burns. Allow the engine to cool down, then turn the cap slowly to release the pressure. To top up coolant in the radiator, use a suitable climbing aid (for example a ladder) to climb up the back of the machine. Slowly loosen the sealing cap to let off the pressure.**
- **Start the engine and flush the system. When standing up or leaving the operator's seat, set the safety lock lever to the LOCK position.**
- **For details of starting the engine, see "Check before starting engine, adjust on page 3-54" and "Starting engine on page 3-68" in the OPERATION section of the Operation and Maintenance Manual.**
- **When the undercover is removed, there is danger of touching the fan.**
- **Never go to the rear of the machine when the engine is running.**

Clean the inside of the cooling system, change the coolant and replace the corrosion resistor according to the table below.

Kind of coolant	Cleaning inside of cooling system and changing coolant	Adding corrosion resistor agent KI
Permanent type anti-freeze (All season type)	Every year (autumn) or every 2000 hours whichever comes first	Every 1000 hours and when cleaning the inside of the cooling system and when changing coolant.
Non-permanent type antifreeze containing ethylene glycol (winter, one season type)	Every 6 months (spring and autumn) (Drain antifreeze in spring, add antifreeze in autumn)	
When not using anti-freeze	Every 6 months or every 1000 hours whichever comes first	

Stop the machine on level ground when cleaning or changing the coolant.
Use a permanent type of antifreeze.
If, for some reason, it is impossible to use permanent type antifreeze, use an antifreeze containing ethylene glycol.
Super Coolant (AF-ACL) has an anti-corrosion effect as well as an antifreeze effect.
The ratio of antifreeze to water depends on the ambient temperature, but to obtain the corrosion resistance effect, a minimum ratio of 30% by volume is necessary.
In areas where the water is hard, always add Komatsu genuine corrosion resistor agent KI. One packet of corrosion resistor agent (No. 600-411-1120) contains 100g (0.22 lb). The standard density of the mixture should be 7g/liter (0.065 oz/US gal).
When deciding the ratio of antifreeze to water, check the lowest temperature in the past, and decide from the mixing rate table given below.
It is actually better to estimate a temperature about 10°C (50°F) lower when deciding the mixing rate.

https://truckmanualshub.com/

Mixing rate of water and antifreeze

Min. atmospheric temperature	°C	-10	-15	-20	-25	-30
	°F	14	5	-4	-13	-22
Amount of anti-freeze	Liter	5.70	6.84	7.79	8.74	9.50
	US gal	1.51	1.81	2.06	2.31	2.51
Amount of water	Liter	13.30	12.16	11.21	10.26	9.50
	US gal	3.51	3.21	2.96	2.71	2.51

⚠ WARNING

Antifreeze is flammable, so keep it away from flame.
Antifreeze is toxic. When removing the drain plug, be careful not to get water containing antifreeze on you. If it gets in your eyes, flush your eyes with large amount of fresh water and see a doctor at once.

Use city water for the cooling water.
If river water, well water or other such water supply must be used, contact your Komatsu distributor.
We recommend use of an antifreeze density gauge to control the mixing proportions.

- Prepare the following:
  Container to mix the coolant: Min 19 liters (5.02 US gal) capacity
- Prepare a water inlet hose.

1. Stop the engine.
2. To loosen and remove the radiator cap, use a suitable climbing aid (for example a ladder) to climb up the back of the machine.
3. Check that the cooling water temperature has gone down enough to make it possible to touch the radiator cap surface by hand, then turn radiator cap (1) slowly until it contacts the stopper to release the pressure.
4. Following this, push radiator cap (1), turn it until it contacts the stopper, then remove it.

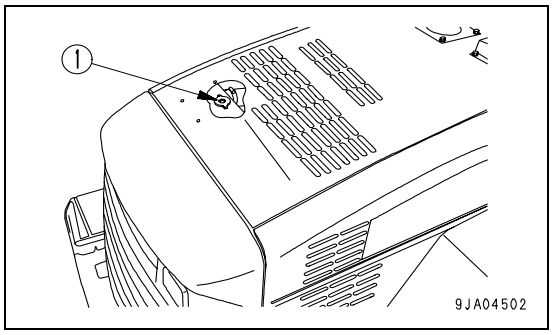

5. Set a container in position to catch drained antifreeze mixture, then open valve (2) under the radiator to drain cooling water.
6. After draining the water, close drain valve (2) and fill with tap water.
7. When the radiator is full, start the engine, and run it at low idling.
   Keep the engine running at low idling for 10 minutes until the water temperature reaches more than 90°C (194°F).
8. Stop the engine, open drain valves (2), drain the water, then tighten them again.
9. After draining the water, clean the cooling system with cleaning agent.
   For the cleaning method, see the instructions for the cleaning agent.
10. Decide the proportions of antifreeze and water according to the table for the mixing rate of water and antifreeze.

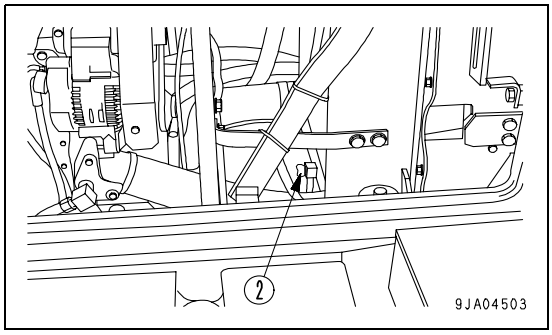

https://truckmanualshub.com/

11. To remove the air in the cooling system, run the engine for 5 minutes at low idling, and for another 5 minutes at high adling. (When doing this, leave the radiator cap off.)
12. After draining off the cooling water of reserve tank (3) , clean the inside of the reserve tank and refill the water between FULL and LOW level.
13. Stop the engine. About 3 minutes later, supply city water up to the water filler, then close radiator cap.

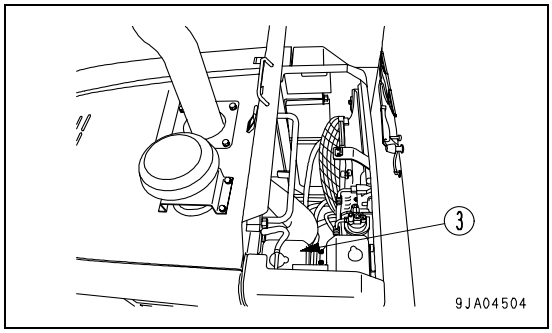

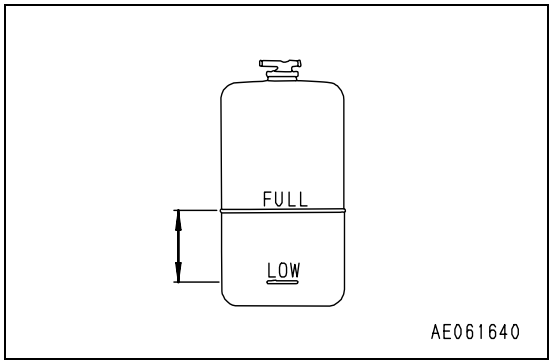

https://truckmanualshub.com/

Check oil level in transfer case, add oil

WARNING

The parts and oil are at high temperature immediately after the engine is stopped, and may cause burns. Wait for the temperature to go down before starting the work.

Carry out this procedure if there is any sign of oil on the transfer case.

1. Start the engine and run it at low idling for at least 5 minutes.
2. Open the cap of oil filler port (F), remove dipstick (G), and wipe the oil off with a cloth.
3. Insert dipstick (G) fully in the oil filler pipe, then take it out again.

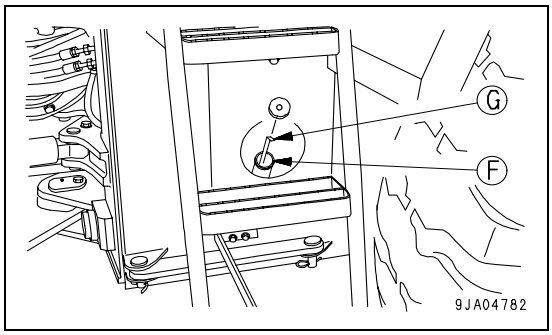

4. The oil level should be between the H and L marks on dipstick (G).
   If the oil level is below the L mark, add engine oil through oil filler (F).

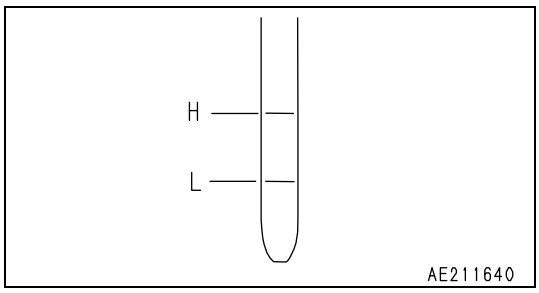

5. If the oil is above the H mark, drain the excess engine oil from drain plug (P), and check the oil level again.
6. If the oil level is correct, insert dipstick (G) in the dipstick guide, then tighten the cap.

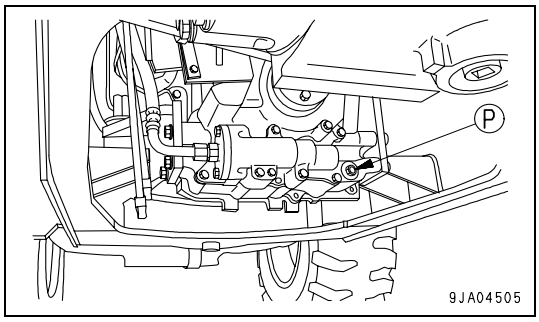

https://truckmanualshub.com/

Check axle oil level, add oil

WARNING

- **When checking the oil level, apply the parking brake and secure the front and rear frames with the safety bar.**
- **After stopping the engine, the parts and oil are at a high temperature. Wait for the temperature to go down before starting the operation.**

Carry out this procedure if there is any sign of oil on the axle case.
Carry out the inspection with the machine on a horizontal road surface.
(If the road surface is at an angle, the oil level cannot be checked correctly.)

- A: Front B: Rear

1. Stop the engine and remove oil level plug (1).

REMARK
Remove the mud and dirt from around plug (1), then remove the plug.

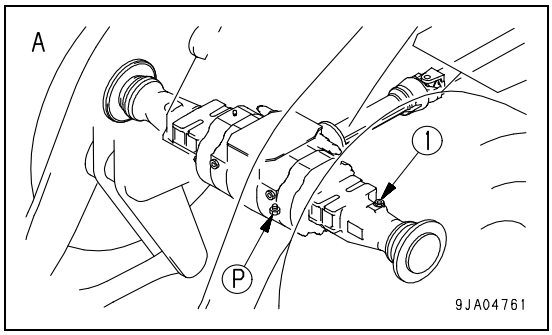

2. Wipe off any oil adhering to the oil level gauge attached to plug (1) with cloth.

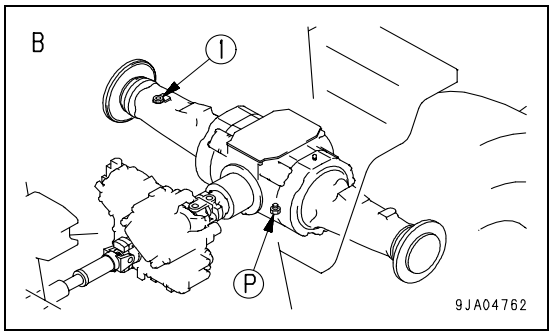

3. Set the oil level gauge (G) as shown in the right diagram.
4. The oil level is correct when it is between the two lines provided on the oil level gauge.
   If the oil level does not reach the lower line, add axle oil through filler port (F).
5. If the oil level is above the upper line, drain off the excess oil through drain plug (P) and check the oil level again.
6. If the oil level is correct, install plug (1).
   Tightening torque: 108 ± 14.7 N·m (11 ± 1.5 kgf·m, 79.6 ± 10.8 lbft)

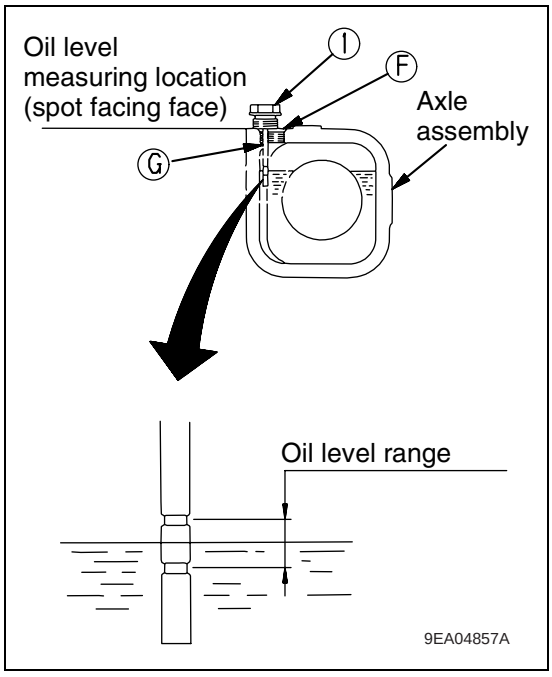

https://truckmanualshub.com/

Clean axle case breather

⚠ WARNING

When cleaning the axle breather, apply the parking brake and secure the front and rear frames with the safety bar.

- A: Front B: Rear

Remove all mud and dirt from around the breather with a brush.
After removing the mud or dirt from around the breather, remove the breather, immerse it in cleaning fluid and clean it.
When cleaning the breather, clean the breathers at two places (front and rear).
After removing the breather, take steps to prevent dirt or dust from entering the mount.

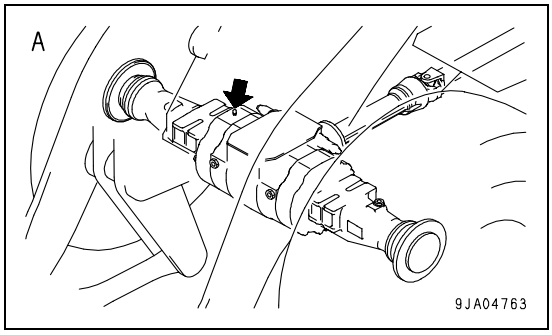

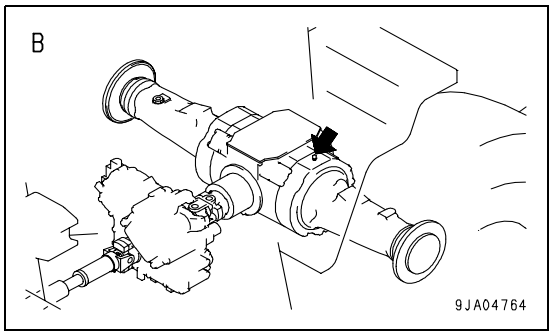

Clean air conditioner condenser

⚠ WARNING

- **Do not wash the condenser with a steam cleaner. There is danger that the condenser could overheat.**
- **If high-pressure water hits your body directly or dirt is sent flying, there is danger of personal injury. Always wear protective glasses, dust mask, and other protective equipment.**

If there is mud or dust on the air conditioner condenser, clean it with water.
If the water pressure is too high, the fins may get deformed. When washing with a high pressure washing machine, apply the water from a reasonable distance.

Washing method

1. Open top cover (1) at the front of the engine hood.
2. Remove 2 mounting bolts (3) at the top of condenser (2).
3. Hold the top of condenser (2) and tip it to the rear. A gap is formed between the engine hood and condenser.
4. Wash with water from the top.
5. Pull condenser (2) back to the original position and fit bolt (3).

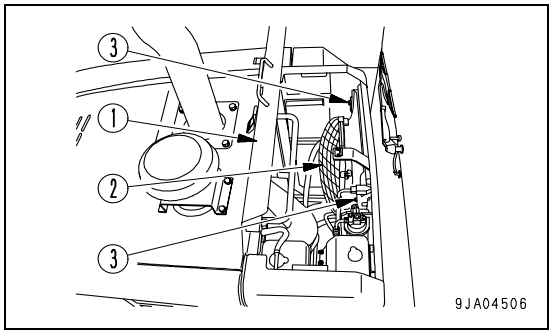

https://truckmanualshub.com/

Check window washing fluid level, add fluid

Check the washing fluid levels in washer tank (1). When the fluid has run low, add automotive window washing fluid.

Be careful not to let dust get into the fluid.

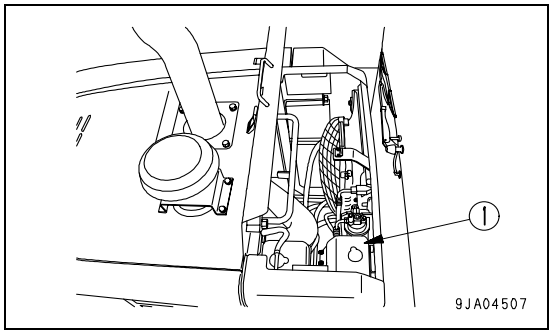

Clean radiator fins and cooler fins

WARNING

- **Never open the engine side cover when the engine is running. Stop the engine completely before starting the cleaning operation.**
- **If compressed air, pressurized water, or steam hits your body directly, or causes dirt to fly, it may lead to personal injury. Always wear safety glasses, dust mask, or other protective equipment.**

Clean the radiator or cleaner if mud or dirt is stuck to it.

1. Open rear grill (1).
2. Move lever (3) of fan guard (2) down to release the lock, then open fan guard (2).
3. Use compressed air to clean the mud, dust, and leaves from the radiator and oil cooler fins. Steam or water may be used instead of compressed air.

NOTICE

If the steam jet nozzle is brought too close to the radiator fins, it may damage the fins, so keep the nozzle a suitable distance away from the fins when cleaning.

4. Check the rubber hose. Replace with a new one if the hose is found to have cracks or to be hardened by ageing.
   Also, check hose clamps for looseness.
5. After cleaning, close fan guard (2), apply the lock, then close rear grill (1).

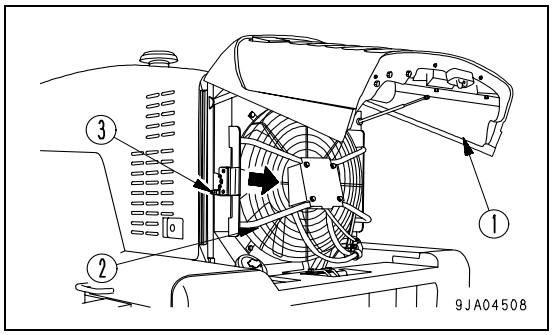

https://truckmanualshub.com/

Clean transfer oil cooler fins

WARNING

If compressed air, high-pressure water, or steam hits your body directly or dirt is sent flying by the compressed air, high-pressure water, or steam, there is danger of personal injury. Always wear protective glasses, dust mask, and other protective equipment.

Clean the oil cooler if mud or dirt is stuck to it.

1. Remove cover (1).
2. Use compressed air to clean the mud, dust, and leaves from the oil cooler fins (2). Steam or water may be used instead of compressed air.
3. After cleaning, install the cover (1).

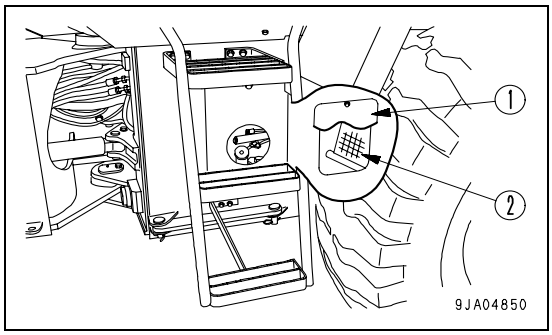

NOTICE
If the steam jet nozzle is brought too close to the oil cooler fins, it may damage the fins, so keep the nozzle a suitable distance away from the fins when cleaning.

Check electrical intake air heater

Before the start of the cold season (once a year), contact your Komatsu distributor to have the electrical intake air heater checked for dirt or disconnections.

Replace bolt on cutting edge

WARNING

It is extremely dangerous if the work equipment moves when carrying out the turning or replacement operation.
Set the work equipment in a stable position, stop the engine, then set the safety lock lever securely to the LOCK position.

Turn or replace the cutting edge before the wear reaches the edge of the bucket.

1. Raise the bucket to a suitable height, then put blocks under the bucket to prevent the bucket from coming down.
   Raise the bucket so that the bottom surface of the bucket is horizontal.
2. Remove nuts and bolts (1), then remove cutting edge (2).
3. Clean the mounting surface of cutting edge (2).
4. Turn cutting edge (2) and install it to the bucket. When turning the edge, install it to the opposite side (left edge to right side, right edge to left side).
   If both sides of the cutting edge are worn, replace with a new part.
   If the wear extends to the mounting surface, repair the mounting surface before installing the cutting edge.
5. Tighten nuts and bolts (1) uniformly so that there is no gap between the bucket and cutting edge.

   Tightening torque for mounting bolt: 745 ± 108 N·m (76 ± 11 kgf·m, 549.7 ± 79.6 lbft)
6. Tighten the mounting bolts again after operating for several hours.

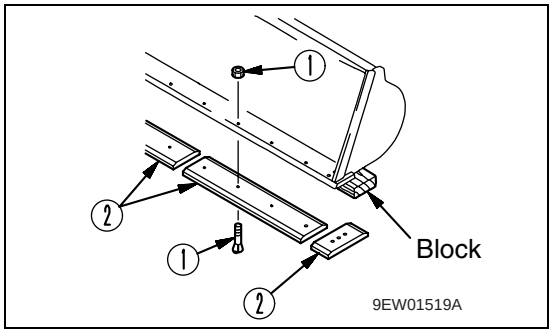

https://truckmanualshub.com/

Replace bucket teeth

WARNING

- **If the pin is hit out with strong force, there is danger that the pin may fly out. Check that there is no one in the surrounding area.**
- **There is danger of pieces flying during the replacement operation, so always wear protective clothing, such as safety glasses and gloves.**

Bucket with tip tooth

(If equipped)

Replace the teeth before they wear down as far as the adapter.

1. Raise the bucket to a suitable height, then put blocks under the bucket to prevent the bucket from coming down.
   Raise the bucket so that the bottom surface of the bucket is horizontal.
2. Remove pin (2) installed to the bucket, then remove tooth (1).
   Put a rod (slightly narrower than the pin) in contact with the hatched portion (either left or right) and tap pin (2) out to the opposite side.

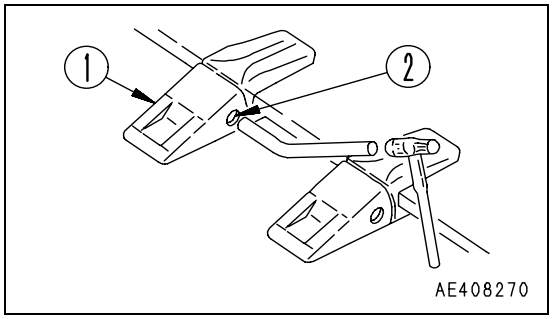

3. Fit new tooth (1) in adapter (3), push in pin (2) partially by hand, then knock it in with a hammer.
4. After operating the machine for a few hours, check that the pin does not come out.

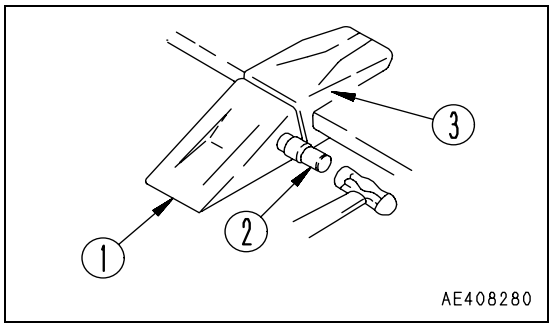

https://truckmanualshub.com/

Check air conditioner

Check level of refrigerant (gas)

WARNING

If the refrigerant used in the cooler gets into your eyes or on your hands, it may cause loss of sight or frostbite. Do not touch the refrigerant. Never loosen any part of the refrigerant circuit.
Do not bring any flame close to any point where the refrigerant gas is leaking.

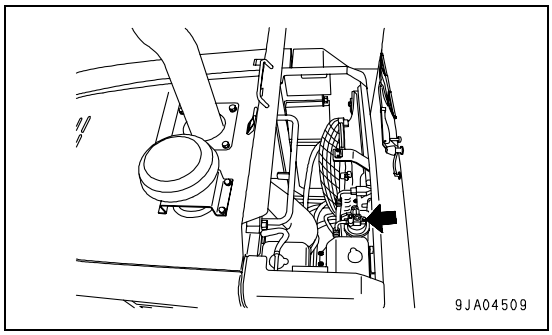

If there is a lack of refrigerant (gas), the cooling performance will be poor. When operating the cooler at high speed with the engine at full throttle, use the receiver sight glass (inspection window) to check the condition of the refrigerant gas (Freon R134a) flowing in the refrigerant circuit.

- No bubbles in refrigerant flow: Suitable
- Some bubbles in flow (bubbles pass continuously): Lack of refrigerant
- Colorless, transparent: No refrigerant

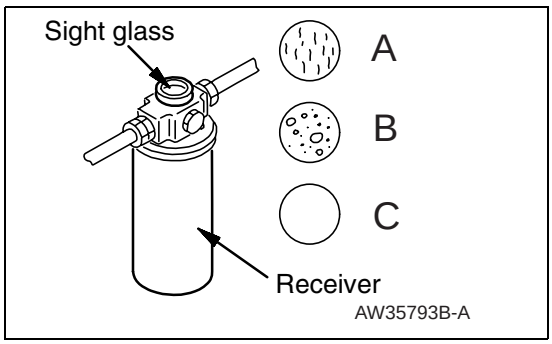

A : Suitable
B : Lack of refrigerant
C: No refrigerant (colorless, transparent)

REMARK
When there are bubbles, the refrigerant gas level is low, so contact your refrigerant dealer to have refrigerant added. If the air conditioner is run with the refrigerant gas level low, it will cause damage to the compressor.

Operating the air conditioner off season

Even during the off-season, operate the air conditioner for 3 - 5 minutes once a month to maintain the oil film at all parts of the compressor.

https://truckmanualshub.com/

Replace slow blow fuse

NOTICE

- **Always turn the power OFF when replacing the slow blow fuse (turn the starting switch to the OFF position).**
- **Always replace the slow blow fuse with a fuse of the same capacity.**

1. Turn the starting switch to the OFF position.
2. Remove the slow blow fuse box from the chassis.

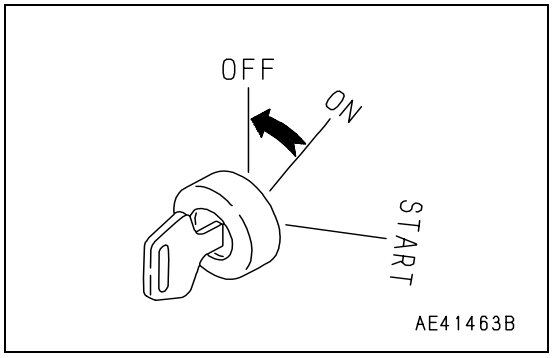

3. Open covers (1), (2), and (3) of the slow blow fuse box. Covers (2) and (3) can be removed easily by using protrusion (A) on the body as a fulcrum and levering the catch of the cover with a flat-headed screwdriver to release it.
4. Loosen screws (4) and (5), and remove. When screws (4) and (5) are removed, slow blow fuse 6 will also come off together with electric wiring (7) and (8).
5. Using screws (4) and (5), install a new slow blow fuse together with electric wiring 7 and 8 to the slow blow fuse box, then close covers (1), (2), and (3).
6. Install the slow blow fuse box to the chassis.

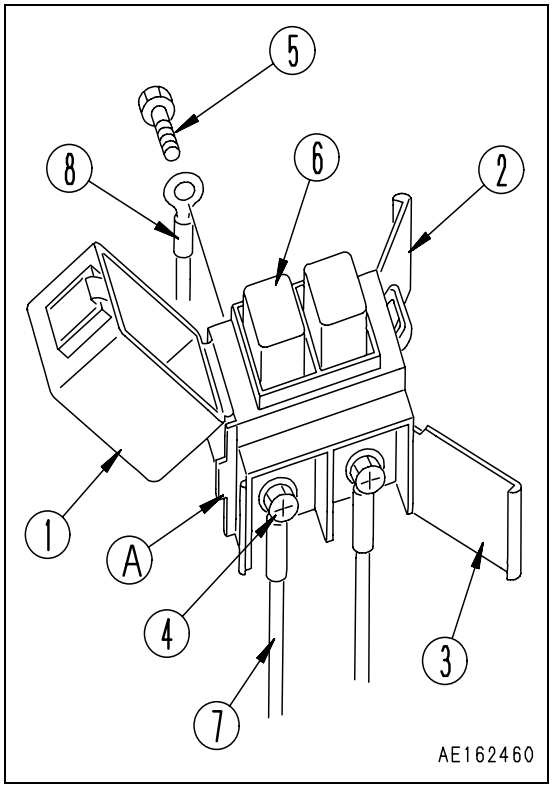

https://truckmanualshub.com/

Selection and inspection of tires

WARNING

If a tire or a rim is handled wrongly, the tire may burst or may be damaged and the rim may be broken and scattered, and that can cause serious injury or death.

- **Since maintenance, disassembly, repair and assembly of the tires and rims require special equipment and skill, be sure to ask a tire repair shop to carry out the work.**
- **Do not heat or weld the rim to which the tire is installed. Do not make a fire near the tire.**

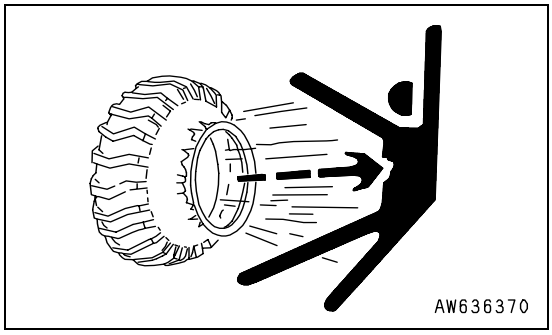

Selection of tires

WARNING

Select the tires according to the conditions of use and the weight of the attachments on the machine. Use only specified tires and inflate them to the specified pressure.

Select the tires according to the conditions of use and the weight of the attachments of the machine. Use the following table.
Consult your Komatsu distributor when using optional tires.

Tire size		Maximum load [kg (lb)]	Tire size
Standard	Front and Rear	6,775 (14,939)	20.5-25-12PR

https://truckmanualshub.com/

Check inflaion pressure of tires

WARNING

When inflating a tire, check that no one will enter the working area. Use an air chuck which has a clip and which can be fixed to the air valve.

- **While inflating the tire, check the inflation pressure occasionally so that it will not rise too high.**
- **If the rim is not fitted normally, it may be broken and scattered while the tire is inflated. To ensure safety, place a guard around the tire and do not work in front of the rim but work on the tread side of the tire.**
- **Abnormal drop of inflation pressure and abnormal fitting of the rim indicate trouble in the tire or rim. In this case, be sure to ask a tire repair shop to carry out repairs.**
- **Be sure to observe the specified inflation pressure.**
- **Do not adjust the inflation pressure of the tires just after high-speed travel or heavy-duty work.**

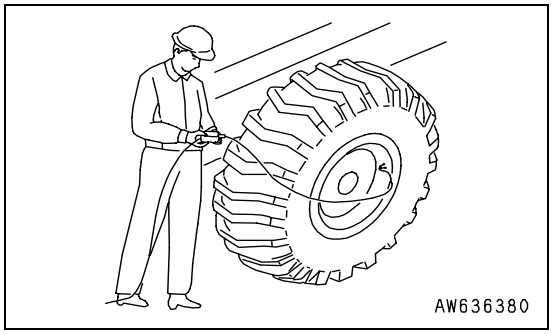

Check

Measure the inflation pressure with a tire pressure gauge while the tires are cool before starting work.

Inflation of tires

Adjust the inflation pressure properly.
When inflating a tire, use an air chuck which can be fixed to the air valve of the tire as shown in the figure. Do not work in front of the rim but work on the tread side of the tire.
The proper inflation pressure is shown below.

Tire size		Inflation pressure
Standard	20.5-25-12PR	Front Tire: 0.27MPa(2.8 kgf/cm^2, 39.8 PSI) Rear Tire: 0.27MPa(2.8 kgf/cm^2, 39.8 PSI)

NOTICE
The optimum inflation pressure differs according to the type of work. For details, see “Handling the tires on page 3-96“ .

https://truckmanualshub.com/

Check before starting

For the following items, see “Check before starting on page 3-57“.

- Check oil level in engine oil pan, add oil
- Check water separator
- Check dust indicator
- Check coolant level, add water
- Check inflation pressure of tires
- Check electric wiring
- Checking with machine monitor
- Check fuel level, add fuel
- Check parking brake
- Check brake pedal

https://truckmanualshub.com/

Every 50 hours service

Drain water, sediment from fuel tank

Loosen valve (1) on the left side of the tank so that the sediment and water will be drained together with fuel.

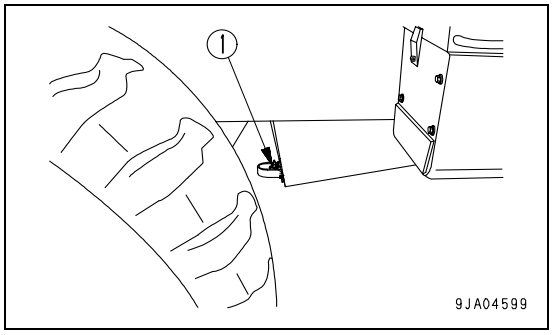

https://truckmanualshub.com/

Every 100 hours service

Maintenance for every 50 hours service should be carried out at the same time.

Lubricate rear axle pivot pin

(2 places)

1. Using a grease pump, pump in grease through the grease fittings marked by the arrows.
2. After greasing, wipe off any old grease that was pushed out.

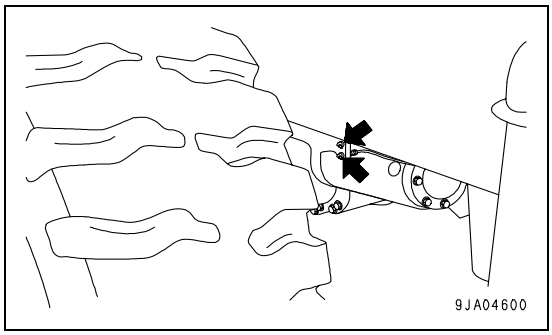

Clean element in air conditioner fresh air filter

WARNING

If compressed air is used, there is danger that dirt may fly and cause personal injury.
Always wear safety glasses, dust mask, and other protective equipment.

If the air conditioner has been used, the air filter should be cleaned.
Stop the air conditioner before cleaning the element.

1. Open cover (1).
2. Remove bracket (2) and filter (3) as one unit.
3. Direct dry compressed air (less than 0.69 MPa (7 kgf/ cm2, 99.4 PSI)) to the element from inside along its folds, then direct it from outside along its folds and again from inside.
4. When installing, fit filter (3) into bracket (2), then install.

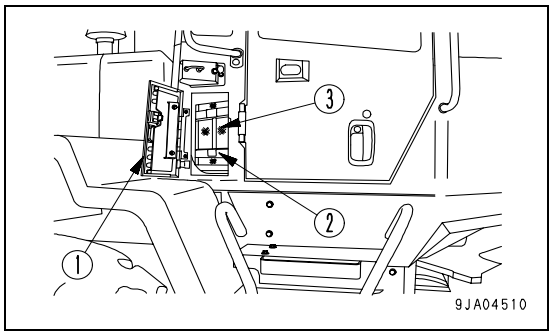

https://truckmanualshub.com/

Check oil level in hydraulic tank, add oil

WARNING

- **The parts and oil are at high temperature after the engine is stopped, and may cause burns. Wait for the temperature to go down before starting the work.**
- **When removing the oil filler cap, turn it slowly to release the internal pressure, then remove it.**

1. Lower the bucket horizontally to the ground and stop the engine. Wait for 5 minutes, then check sight gauge (G). The oil level should be between the H and L marks.

NOTICE
Do not add oil above the H line. This will damage the hydraulic circuit or cause the oil to spurt out. If oil has been added to above the H level, stop the engine and wait for the hydraulic oil to cool down, then drain the excess oil from drain plug (P).

2. If the oil is below the L level, add oil to the hydraulic tank as follows.
   1) Remove cover (1).
   2) Keep grip (2) pulled, then turn oil filler cap (F) counter-clockwise and remove it.
   3) Refill the specified quantity of oil through oil filler (F).
   4) After adding oil, install oil filler cap (F) and cover (1).

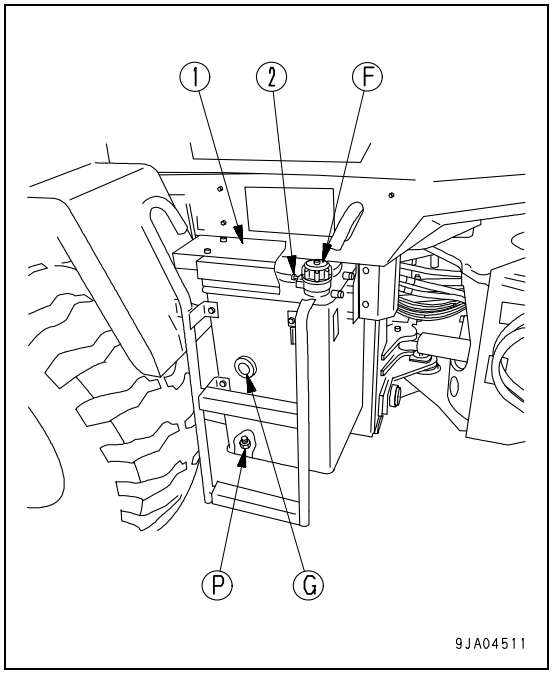

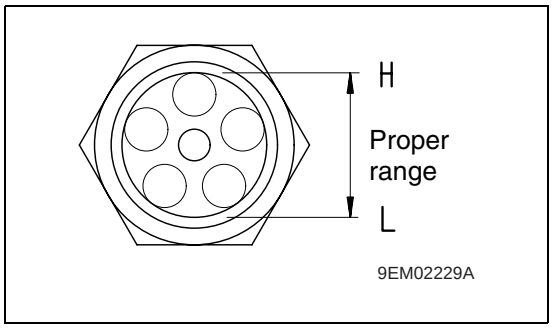

https://truckmanualshub.com/

Every 250 hours service

Maintenance for every 50 and 100 hours service should be carried out at the same time.

Check battery electrolyte level

Carry out this check before operating the machine.

⚠ WARNING

- **Do not use the battery if the battery electrolyte level is below the LOWER LEVEL line. This will accelerate deterioration of the inside of the battery and reduce the service life of the battery. In addition, it may also cause an explosion.**
- **The battery generates flammable gas and there is danger of explosion, so do not bring fire or sparks near the battery.**
- **Battery electrolyte is dangerous. If it gets in your eyes or on your skin, wash it off with a large amount of water and consult a doctor.**
- **When adding distilled water to the battery, do not allow the battery electrolyte to go above the UPPER LEVEL line. If the electrolyte level is too high, it may leak and cause damage to the paint surface or corrode other parts.**

NOTICE

When adding distilled water in cold weather, add it before starting operations in the morning to prevent the electrolyte from freezing.

Inspect the battery electrolyte level at least once a month and follow the basic safety procedures given below.

WHEN CHECKING ELECTROLYTE LEVEL FROM SIDE OF BATTERY

If it is possible to check the electrolyte level from the side of the battery, check as follows.

1. Open the cover of the battery box.
   There are two battery boxes: One on each side at the rear of the machine.
2. Use a wet cloth to clean the area around the electrolyte level lines and check that the electrolyte level is between the UPPER LEVEL (U.L.) and LOWER LEVEL (L.L.) lines.
   If the battery is wiped with a dry cloth, static electricity may cause a fire or explosion.

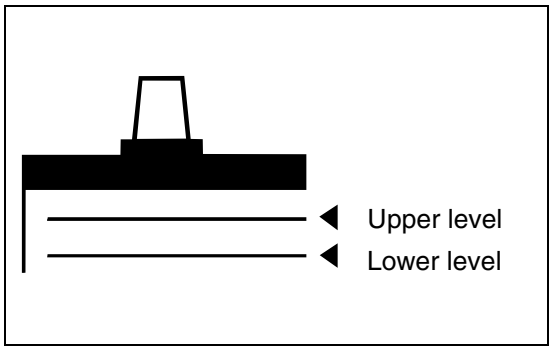

3. If the electrolyte level is below the midway point between the U.L. and L.L. lines, remove cap (1) and add distilled water to the U.L. line.
4. If distilled water has been added to any cell of cap (1), add distilled water also to the other cells.
5. Clean the vents of the battery caps, then close the caps securely.
   Keep the top of the battery clean and wipe it with a wet cloth.

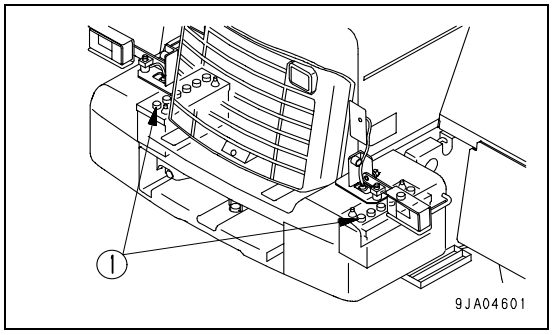

REMARK

If distilled water is added to above the U.L. line, use a syringe to lower the level to the U.L. line. Neutralize the removed fluid with baking soda (sodium bicarbonate), then flush it away with a large amount of water or consult your Komatsu distributor or battery maker.

https://truckmanualshub.com/

WHEN IT IS IMPOSSIBLE TO CHECK ELECTROLYTE LEVEL FROM SIDE OF BATTERY

If it is impossible to check the electrolyte level from the side of the battery, or there is no display of the UPPER LEVEL line on the side of the battery, check as follows.

1. Open the cover of the battery box.
   There are two battery boxes: One on each side at the rear of the machine.
2. Remove cap (1) at the top of the battery, look through the water filler port, and check the electrolyte surface. If the electrolyte does not reach the sleeve, add distilled water so that the level reaches the bottom of the sleeve (UPPER LEVEL line) without fail.
3. If distilled water has been added to any cell of cap (1), add distilled water also to the other cells.

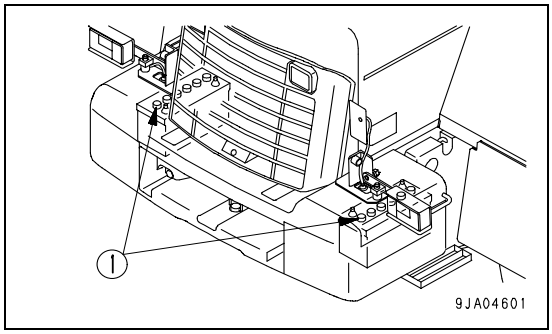

Use the diagram below for reference, and check if the electrolyte reaches the bottom of the sleeve.

A	Correct level The electrolyte level is up to the bottom of the sleeve, so the surface tension causes the surface to rise and the plate appears to be warped.
B	Too low (level) The electrolyte level is not up to the bottom of the sleeve, so the plate appears to be normal.

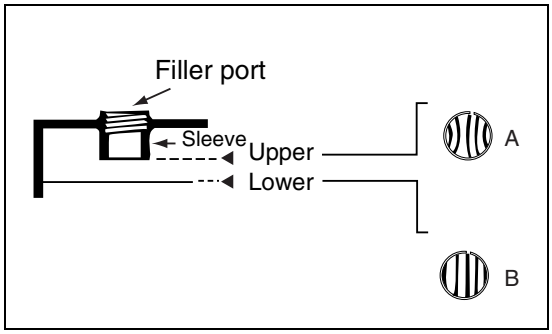

4. After adding distilled water, tighten cap (1) securely.

REMARK

If distilled water is added to above the bottom of the sleeve, use a syringe to lower the level to the bottom of the sleeve. Neutralize the removed fluid with baking soda (sodium bicarbonate), then flush it away with a large amount of water or consult your Komatsu distributor or battery maker.

When it is possible to use indicator to check electrolyte level

If it is possible to use and indicator to check the electrolyte level, follow the instructions given.

https://truckmanualshub.com/

Check parking brake

Test conditions

- Tire inflation pressure: as specified
- Road surface: Dry paved surface with 25% grade
- Machine: Operating condition

Test method

1. Start the engine and set the work equipment to the travel posture.
2. Align the machine facing straight to the front, then drive the machine up a 25% grade with the bucket empty.
3. Apply the brake to stop the machine, return the directional lever to the neutral position ,N', set the parking brake to the LOCK position and stop the engine.
4. Release the brake pedal slowly and check whether the machine is held in Stop position.

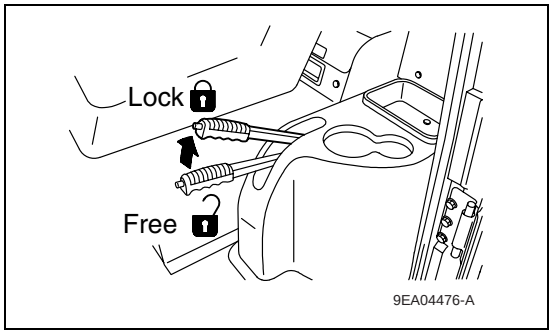

Check air conditioner compressor belt tension, adjust

Checking

1. Open the engine side cover on the left side of the chassis.
2. Standard deflection “a“ between air conditioner compressor pulley (1) and fan pulley (2) when pressed with a thumb (approx. 98 N (10 kg)) should be approx. 9.5 to 13.5 mm (0.4 to 0.5 in).
   When a belt tension gauge is used, the standard tension is within a range of 353 to 549 N (36 to 54 kgf).

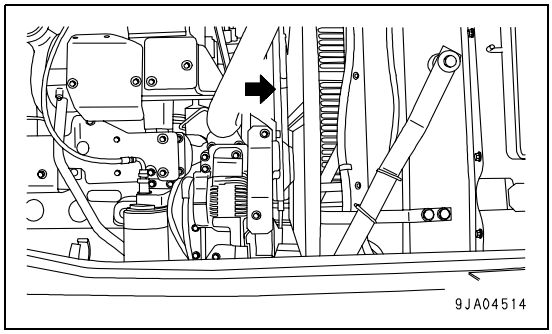

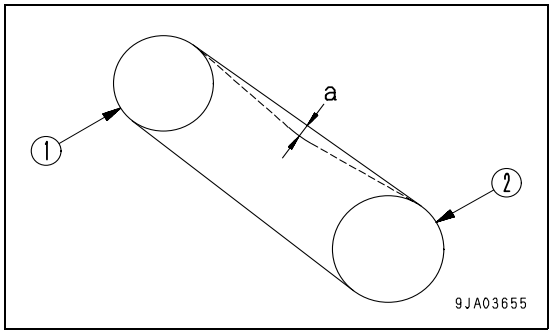

Check when changing the V-belt

The standard deflection between the air conditioner compressor pulley and fan pulley when pressed with a thumb (approx. 98 N (10 kgf)) should be approx. 7 to 10 mm (0.28 to 0.4 in).
When a belt tension gauge is used, the standard tension is within a range of 533 to 745 N (54 to 76 kgf).

REMARK

When the belt has been replaced with a new part, a high tension is necessary, so the initial tension is in the value given above.

https://truckmanualshub.com/

Adjusting

1. Open the engine side cover on the right side of the machine.
2. When adjusting, loosen 4 bolts (1), turn 2 adjustment bolts (2), and move bracket (3) and the compressor as one unit.
3. After adjusting, tighten bolt (1) and the locknut of bolt (2).

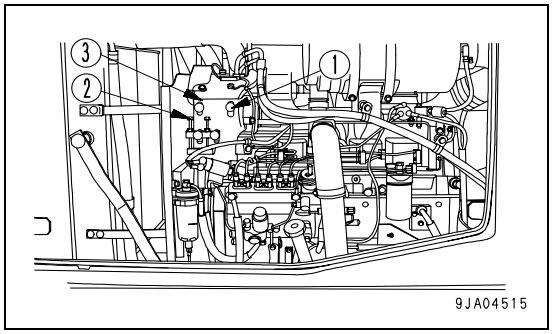

NOTICE

- **Check each pulley for damage, wear of the V-groove, and wear of the V-belt. In particular, be sure to check that the V-belt is not touching the bottom of the V-groove.**
- **In case any of the following occurs, ask the Komatsu distributor in your territory to replace the belts with new ones.**
  - **The fan belt has elongated, leaving little allowance for adjustment.**
  - **A cut or crack is found on the belt.**
  - **Slipping or creaking sound is heard coming from the belt.**
- **When the new V-belt is set, readjust it after one hour of operation.**

Check for loose wheel hub bolts, tighten

If wheel hub nuts (1) are loose, tire wear will be increased and accidents may cause.

1. Check for loose nuts, and tighten if necessary.
   When checking for loose nuts, always turn the nuts in the direction of tightening to check.
   Tightening torque: 927 ± 103 N·m (94.5 ± 10.5 kgf·m, 683.5 ± 75.9 lbft)
2. If any stud bolt is broken, replace all the stud bolts for that wheel.

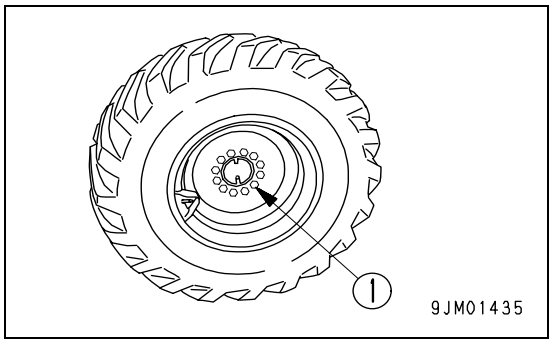

https://truckmanualshub.com/

Clean element in air conditioner recirculation filter

1. Loosen knob (1), remove filter inspection cover (2), then open filter inspection cover (3).

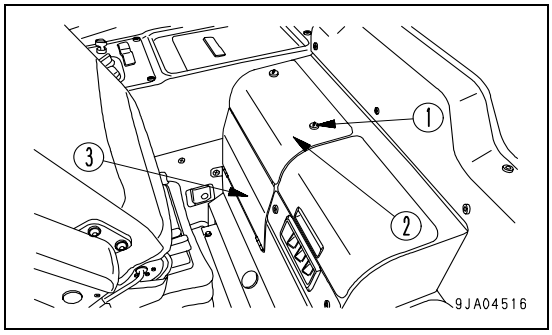

2. Pull out filters (4) and (5) in the direction of the arrow.
3. Clean with compressed air in the same way as for the fresh air filter.
   If the filter is extremely dirty, rinse it in water.
   After rinsing the filter, dry it completely before installing it again.

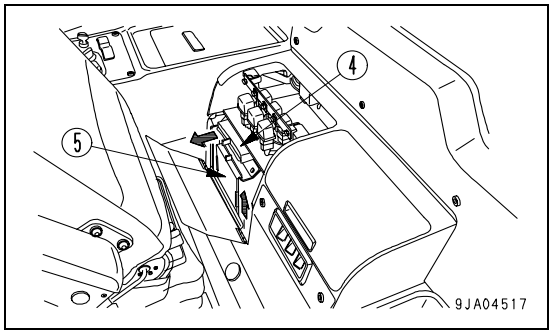

https://truckmanualshub.com/

Lubricating

1. Using a grease pump, pump in grease through the grease fittings marked by the arrows.
2. After greasing, wipe off any old grease that was pushed out.

NOTICE

On jobsites where there is a lot of heavy-duty work, or on jobsites where operations are carried out continuously for more than eight hours, reduce the greasing interval and carry out greasing more frequently.

(1) Bucket pin (2 places)
(2) Tilt lever pin (1 place)
(3) Bucket link pin (2 places)

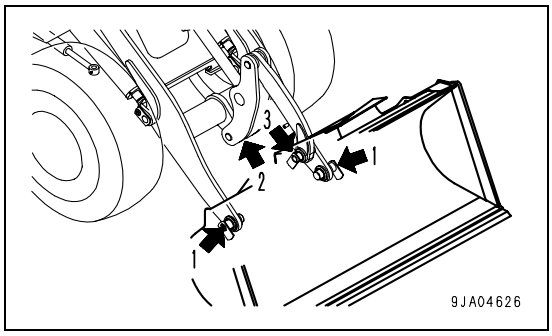

(4) Dump cylinder pin (2 places)
(5) Lift cylinder pin (4 places)
(6) Lift arm pivot pin (2 places)
(7) Steering cylinder pin (4 places)

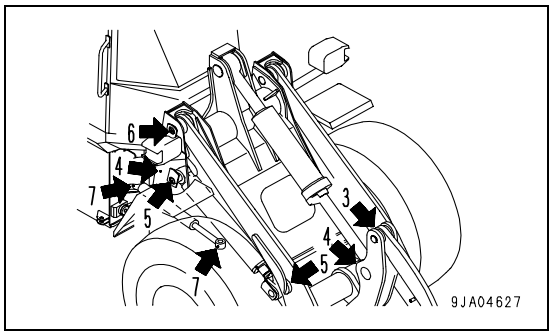

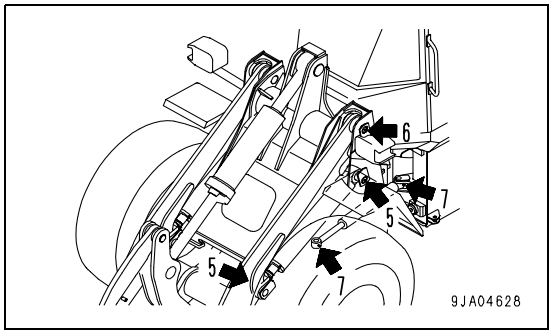

https://truckmanualshub.com/

Every 500 hours service

Maintenance for every 50, 100 and 250 hours service should be carried out at the same time.

Change oil in engine oil pan, replace engine oil filter cartridge

WARNING

- **The parts and oil are at high temperature after the engine is stopped, and may cause burns. Wait for the temperature to go down before starting the work.**
- **When removing the oil filler cap, turn it slowly to release the internal pressure, then remove it.**

- Refill capacity: 19.5 liters (5.15 US gal)
- Filter wrench

1. Open the engine side cover on the right side of the chassis.
2. Open oil filler (F).
3. Place a container to catch the oil under drain plug (P).
4. Loosen drain plug (P) and drain the oil. Be careful not to get oil on yourself.
5. Check the drained oil, and if there are excessive metal particles or foreign material, please contact your Komatsu distributor.
6. Tighten drain plug (P).

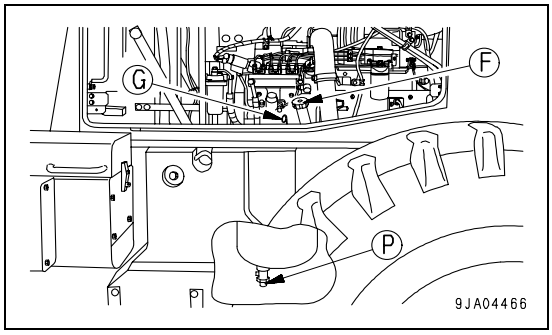

7. Open the engine side cover on the left side of the chassis.
8. Using the filter wrench, turn filter cartridge (1) counterclockwise to remove it.
9. Clean the filter holder, fill the new filter cartridge with engine oil, then coat the seal and thread of the filter cartridge with engine oil (or coat thinly with grease) and install.
10. When installing the seal, tighten it so its surface comes into contact with the filter holder, then tighten another 3/4 turn.

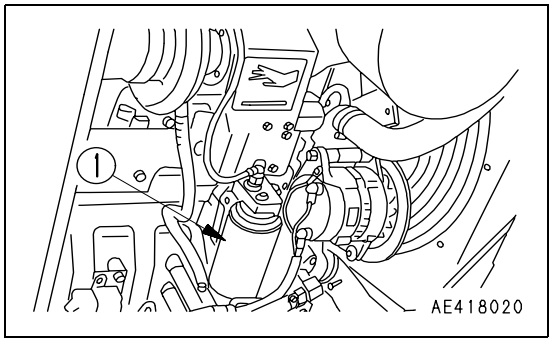

11. After replacing the filter cartridge, add engine oil through oil filler (F) until the oil level is between the H and L marks on the dipstick (G).
12. Run the engine at idling for short time, then stop the engine, and check that the oil is between the H and L marks on the dipstick. For details, see “Check oil level in engine oil pan, add oil on page 3-57“.

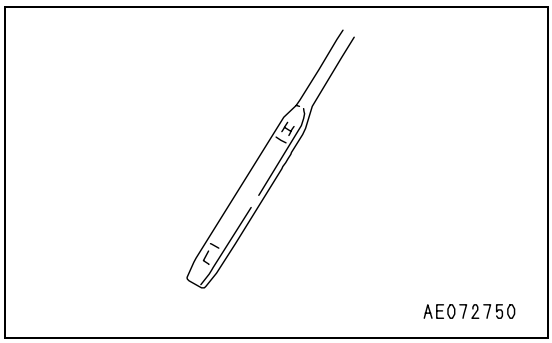

https://truckmanualshub.com/

Replace fuel filter cartridge

WARNING

- **Engine is at high temperature immediately after the machine has been operated. Wait for engine to cool down before replacing the filter.**
- **Do not bring fire or sparks near the fuel.**

REMARK
If the machine has run out of fuel, use Steps 3 to 10 to bleed the air.

- Container to catch the oil
- Filter wrench

1. Open the engine side cover on the right side of the chassis.
2. Set the container to catch the fuel under the filter cartridge.
3. Using a filter wrench, turn filter cartridge (1) counterclockwise to remove it.
4. Clean the filter holder, fill a new filter cartridge with clean fuel, coat the packing surface with engine oil, then install it to the filter holder.
   Add fuel from small hole (A) (dirty side) at eight places. Do not add fuel from hole (B) (clean side) at the center.

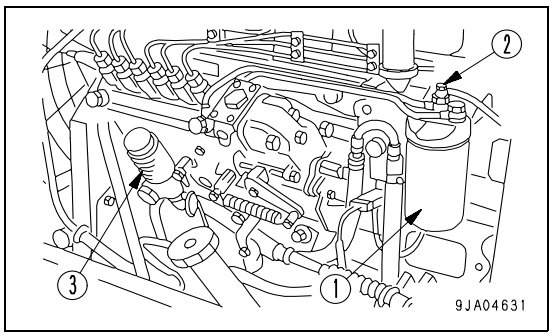

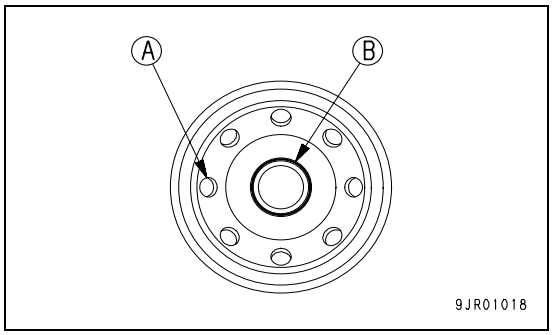

NOTICE
If the filter cartridge is tightened excessively, the packing will be damaged and fuel will leak. If the filter cartridge is too loose, fuel will also leak from the packing, so always tighten to the correct amount.

5. When installing, screw in cartridge until seal comes in contact with sealing surface, then tighten approx. an additional 1/2 turn.
6. Add fuel to the fuel tank until full (to FULL mark on the fuel gauge).
7. Loosen air bleed plug (2).
8. Loosen the knob of feed pump (3), then pump it up and down until no more bubbles come out with the fuel from air bleed plug (2).
9. After bleeding the air, tighten air bleed plug (2), then push in the knob of priming pump (3) and tighten it.
   Tightening torque for air bleed plug: 7.8 to 11.8 N·m (0.8 to 1.2 kgf·m, 5.8 to 8.7 lbft)
10. After bleeding the air, start the engine and check that there is no fuel leakage from the filter seal surface. If there is any leakage, check the tightening of the filter cartridge. If there is still leakage, follow Step 2 and 3 to remove the filter cartridge, then check the packing surface for damage or foreign material. If any damage or foreign material is found in the packing, replace the cartridge with a new part, then repeat Steps 4 - 7 to install the filter cartridge.

https://truckmanualshub.com/

Clean water separator strainer

WARNING

- **Engine is at high temperature immediately after the machine has been operated. Wait for engine to cool down before replacing the filter.**
- **Do not bring fire or sparks near the fuel.**

1. Open the engine side cover on the right side of the chassis.
2. Prepare a container to catch the drained fuel and set it under the water separator.
3. Loosen drain valve (1) at the bottom of the water separator and drain the fuel into the container.
4. Loosen ring nut (2), then remove cup (3).
5. Remove strainer (4) from the separator base.
6. Wash the interior of strainer (4) and cup (3) with clean fuel.
7. Check strainer (4) and replace it if it is damaged.
8. Clean the separator base and wash strainer (4), then install the strainer to the separator base.
9. Coat the threaded portion of ring nut (2) thinly with grease.
10. Fill cup (3) with clean fuel, install it to the separator base, then tighten it with ring nut (2).
    The specified tightening torque of ring nut (2):
    40 ± 3 N·m (4.1 ± 0.3 kgf·m, 29.7 ± 2.2 lbft)
    If the ring is loose, it will cause leakage of fuel, so always tighten it to the specified torque.

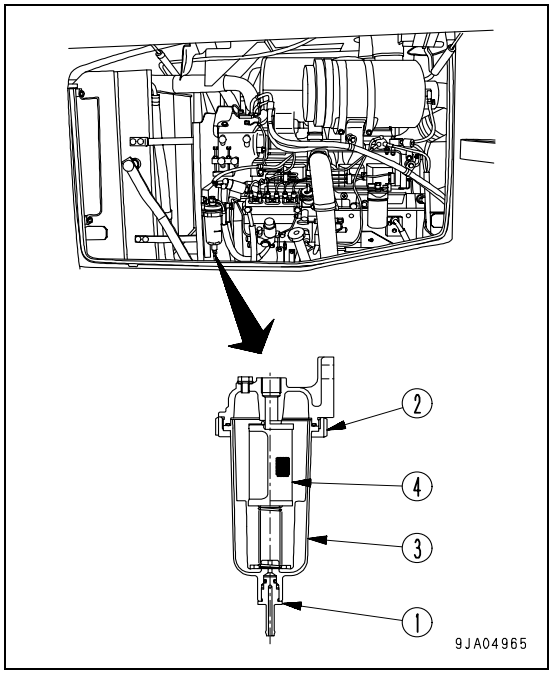

REMARK
Be careful not to lose the O-ring, float, or spring. Be sure to assemble them after washing.

11. After installing filter cup (3), bleed air in the following manner.
12. Loosen air bleed plug (5) of the fuel filter.
13. Loosen the knob of feed pump (6), then pump it up and down until no more bubbles come out with the fuel from air bleed plug (5).
14. After bleeding the air, tighten air bleed plug (5), then push in the knob of priming pump (6) and tighten it.
    Tightening torque for air bleed plug: 7.8 to 11.8 N·m (0.8 to 1.2 kgf·m, 5.8 to 8.7 lbft)

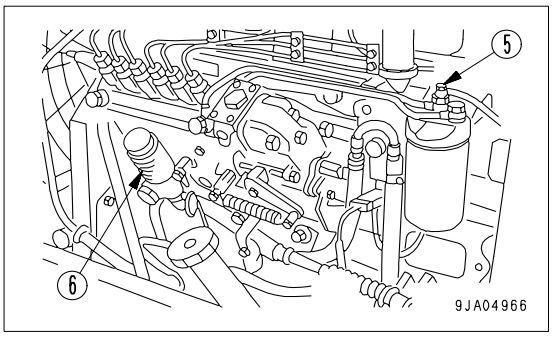

https://truckmanualshub.com/

Every 1000 hours service

Maintenance for every 50, 100, 250 and 500 hours service should be carried out at the same time.

Change oil in transfer case

WARNING

- **The parts and oil are at high temperature after the engine is stopped, and may cause burns. Wait for the temperature to go down before starting the work.**
- **When removing the oil filler cap, turn it slowly to release the internal pressure, then remove it.**

- Refill capacity: 6.9 liters (1.82 US gal)

1. Set a container to catch the oil under drain plug (P), then remove drain plug (P) and drain the oil.
   To prevent the oil from pouring out suddenly, loosen drain plug (P) and remove it gradually.
2. After draining the oil, install drain plug (P).
3. Loosen bolt (1), remove cover (2), then take out strainer (3).
4. Remove any dirt stuck to strainer (3), then wash it with clean diesel oil or flushing oil. If the strainer is damaged, replace it with a new part.
5. Replace O-ring (4) of cover (2) with a new part, then install.

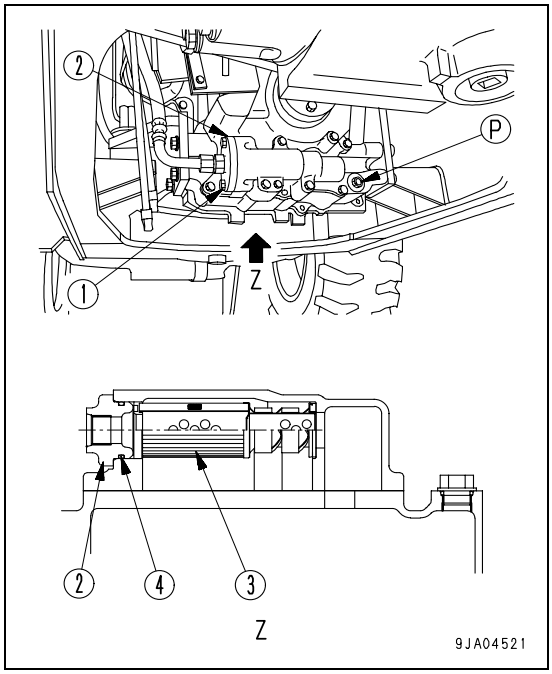

6. Refill the specified quantity of engine oil through oil filler (F).
7. After filling with oil, check that the oil is at the specified level. For details, see “Check oil level in transfer case, add oil on page 4-27“.

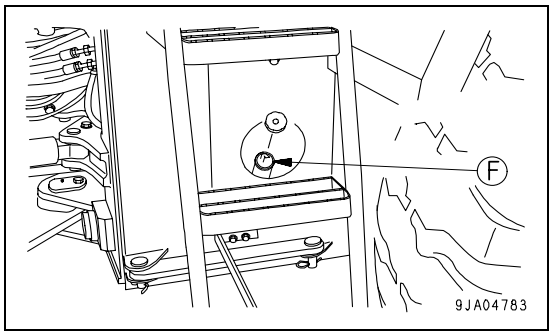

8. Check that there is no oil leakage from the transfer case.

https://truckmanualshub.com/

Clean transfer case breather

1. Remove cover (1).

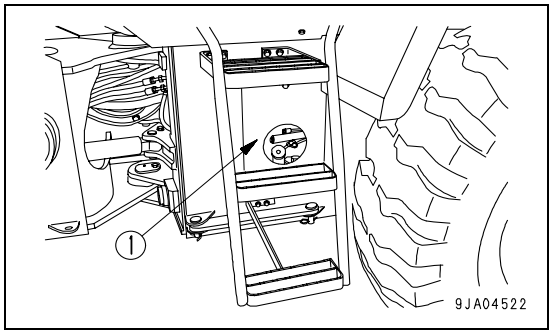

2. Remove the mud and dirt from around the breather (2), then remove breather (2).
   After removing the breather, take steps to prevent dirt or dust from entering the mount.
3. Soak the breather (2) in washing liquid and wash it.

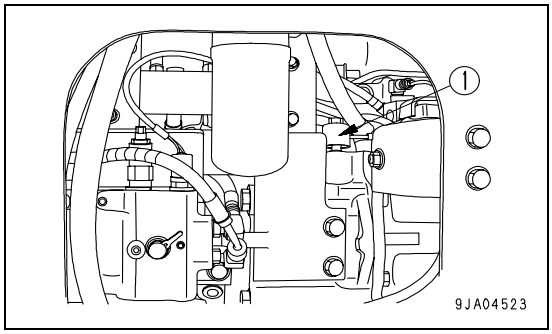

https://truckmanualshub.com/

Replace HST oil filter element

WARNING

- **The parts and oil are at high temperature after the engine is stopped, and may cause burns. Wait for the temperature to go down before starting the work.**
- **When removing the oil filler cap, turn it slowly to release the internal pressure, then remove it.**

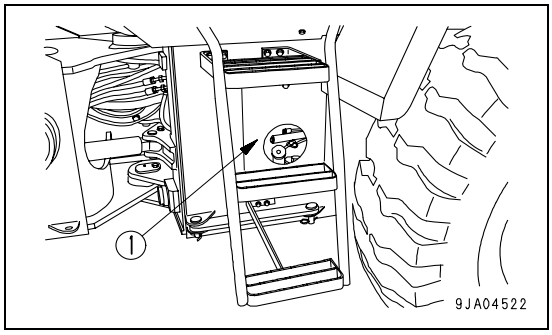

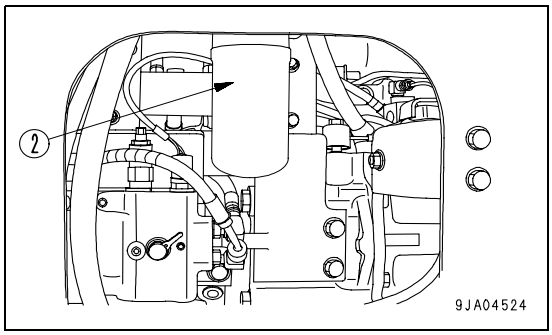

1. Remove cover (1).
2. Using a filter wrench, turn filter cartridge (2) to the left to remove it.
3. Install the new filter cartridge.
   Tightening torque: 29 to 39 N·m (3.0 to 4.0 kgf·m, 21.7 to 28.9 lbft)
4. Run the engine at low idling for 5 minutes to bleed the air from the HST circuit.
5. Check that the hydraulic oil is at the specified level. For details, see “Check oil level in hydraulic tank, add oil on page 4-40“.
6. Run the engine at low idling, and extend and retract the steering, bucket, and lift arm cylinders 4 to 5 times. Be careful not to operate the cylinder to the end of its stroke (stop approx.100 mm (3.9 in) before the end of stroke).

NOTICE
If the engine is run immediately at high speed or the cylinder is operated to the end of its stroke, the air inside the cylinder will cause damage to the piston packing.

7. Next, operate the steering, bucket, and lift arm cylinders to the end of their stroke 3 to 4 times, then stop the engine and loosen fillercap to bleed the air from the hydraulic tank.
8. Check that the hydraulic oil is at the specified level. For details, see “Check oil level in hydraulic tank, add oil on page 4-40“.
9. After completing the air bleed operation, install cover (2).

Replace the HST filter element if the HST oil filter clogging warning pilot lamp lights up, even if 1000 hours or 1 year has not passed.

https://truckmanualshub.com/

Lubricating

1. Using a grease pump, pump in grease through the grease fittings marked by the arrows.
2. After greasing, wipe off any old grease that was pushed out.

(1) Center hinge pin (2 places)

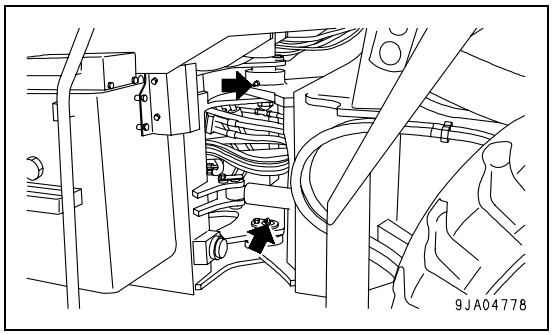

(2) Engine stop solenoid linkage (1 place)

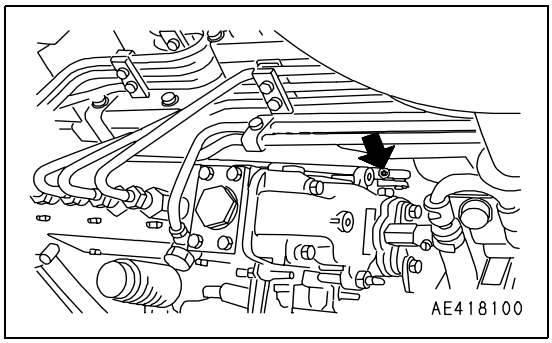

Check tightening parts of turbocharger

Please contact your Komatsu distributor to have the tightening portions checked.

Check play of turbocharger rotor

Please contact your Komatsu distributor to have the rotor play checked.

Check alternator driving belt tension and replacement

Since inspection and replacement of the belt require special tools, contact your Komatsu distributor.

REMARK

The machine is equipped with an auto tensioner, so there is no need to adjust the tension.

https://truckmanualshub.com/

Every 2000 hours service

Maintenance for every 50, 100, 250, 500 and 1000 hours service should be carried out at the same time.

Change oil in hydraulic tank, replace hydraulic filter element

WARNING

- **The parts and oil are at high temperature after the engine is stopped, and may cause burns. Wait for the temperature to go down before starting the work.**
- **When removing the oil filler cap, turn it slowly to release the internal pressure, then remove it.**

- Refill capacity: 67 liters (17.70 US gal)

1. Lower the bucket horizontally to the ground and apply the parking brake, then stop the engine.
2. Remove covers (1) and (2).
3. Keep grip (3) pulled, then turn oil filler cap (F) counterclockwise and remove it.
4. Set a container to catch the oil under drain plug (P).
5. Loosen drain plug (P), drain the oil, then tighten drain plug (P) again.
6. Using a filter wrench, turn cartridge (4) to the left to remove it.
7. Clean the filter holder, fill the new filter cartridge with hydraulic oil, then coat the seal and thread of the filter cartridge with hydraulic oil (or coat thinly with grease) and install.
   When installing the seal, tighten it until its surface comes to contact with the filter holder, then tighten it 1/3 turn more.
8. Add hydraulic oil through the filler port to refill level.
9. Check that the hydraulic oil is at the specified level. For details, see “Check oil level in hydraulic tank, add oil on page 4-40“.
10. Run the engine at low idling, and extend and retract the steering, bucket, and lift arm cylinders 4 to 5 times. Be careful not to operate the cylinder to the end of its stroke (stop approx.100 mm (3.9 in) before the end of stroke).

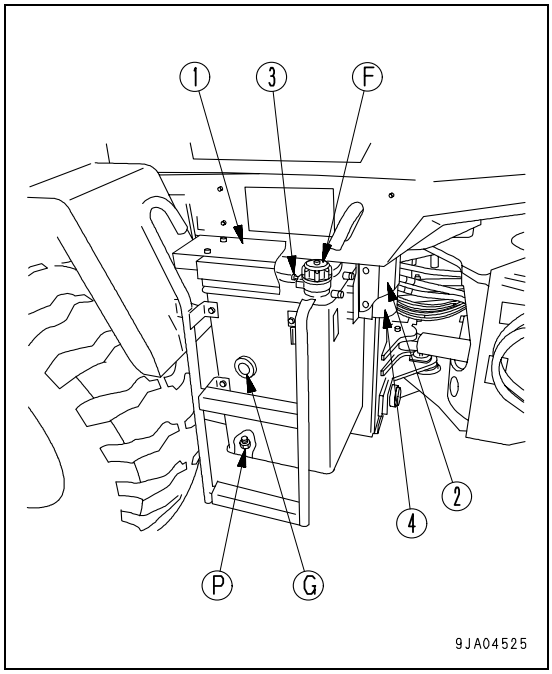

NOTICE

If the engine is run immediately at high speed or the cylinder is operated to the end of its stroke, the air inside the cylinder will cause damage to the piston packing.

11. Next, operate the steering, bucket, and lift arm cylinders to the end of their stroke 3 to 4 times, then stop the engine and loosen fillercap to bleed the air from the hydraulic tank.
12. Check that the hydraulic oil level and add oil to the specified level. For details, see “Check oil level in hydraulic tank, add oil on page 4-40“.
13. Next, raise the engine speed and follow the procedure in Step 11 to bleed the air. Repeat this process until no more air comes out.
14. After completing the air bleed operation, install cover (1) and (2).

https://truckmanualshub.com/

Replace hydraulic tank breather element

WARNING

- **The parts and oil are at high temperature after the engine is stopped, and may cause burns. Wait for the temperature to go down before starting the work.**
- **When removing the oil filler cap, turn it slowly to release the internal pressure, then remove it.**

1. Remove cover (1).
2. Loosen bolt (2) at the top of the filler cap, then remove cap cover (3).
3. Remove element (4).
4. Coat O-ring (5) of the new element with grease, then install.
5. Align cap cover (3) with the grooves in the body, then tighten with bolt (2).
6. Install cover (1).

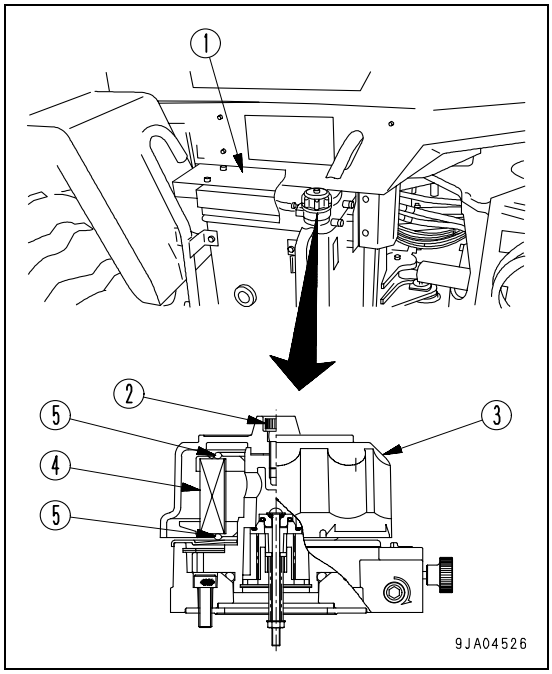

https://truckmanualshub.com/

Change axle oil

WARNING

- **When changing the oil, apply the parking brake and secure the front and rear frames with the safety bar.**
- **After the engine is stopped, the parts and oil are at high temperature, and may cause burns. Wait for the temperature to go down before starting the operation.**
- **When the plug is removed, oil may spurt out, so turn it slowly to release the internal pressure, then remove it carefully.**

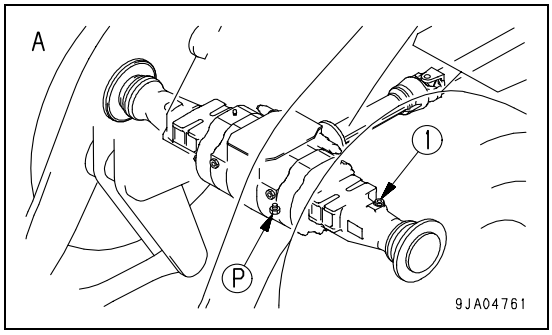

- Refill capacity (front and rear, each): 18.0 liters (4.75 US gal)

- A: Front B: Rear

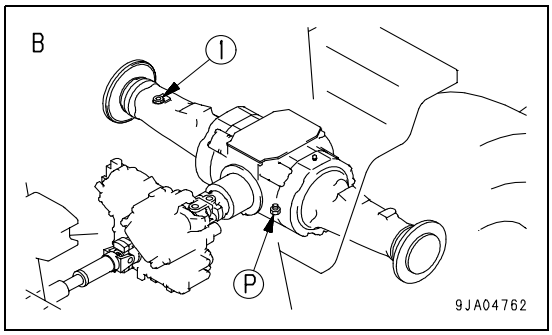

1. Set a container to catch the oil under drain plug (P).
2. Remove plug (1), then remove drain plug (P) to drain the oil.

REMARK
Remove the mud and dirt from around plug (1), then remove the plug.

3. After draining the oil, clean drain plug (P) and install it again.
4. Add axle oil through plug hole (1) at the refill level.

REMARK
For axles with ASD (Limited-Slip Differential), the brand of lubricating oil is different, so always use the specified lubricating oil.

5. After adding oil, check that the oil is at the specified level. For details, see “Check axle oil level, add oil on page 4-28“.

REMARK
For operations where the brake is used frequently, change the axle oil at shorter intervals.

Replace element in air conditioner recirculation air filter, fresh air filter

Remove both the recircuration air filter and fresh air filter in the same way as when cleaning, and replace them with new parts.

For details of cleaning the recircuration air filter, see “Clean element in air conditioner recirculation filter on page 4-45“.
For details of cleaning the fresh air filter, see “Clean element in air conditioner fresh air filter on page 4-39“.

Check alternator, starting motor

The brush may be worn or have no grease on the bearing, so contact your Komatsu distributor for inspection or repair.
If the engine is started frequently, carry out inspection every 1000 hours.

Check engine valve clearance, adjust

As special tool is required for removing and adjusting the parts, request your Komatsu distributor for service.

https://truckmanualshub.com/

Check brake disc wear

WARNING

- **When checking the brake disc wear, apply the parking brake and secure the front and rear frames with the safety bar.**
- **Make sure that the brake oil temperature is less than 60°C (140°F) before checking the brake wear.**
- **If the disc is near the wear limit, carry out inspection at shorter intervals, regardless of the specified inspection interval.**

When checking the brake disc for wear, there are 4 places (front axle and rear axle, left and right), so use the same procedure to check all 4 places.

- Prepare an inspection gauge.

1. Remove check plug (1).

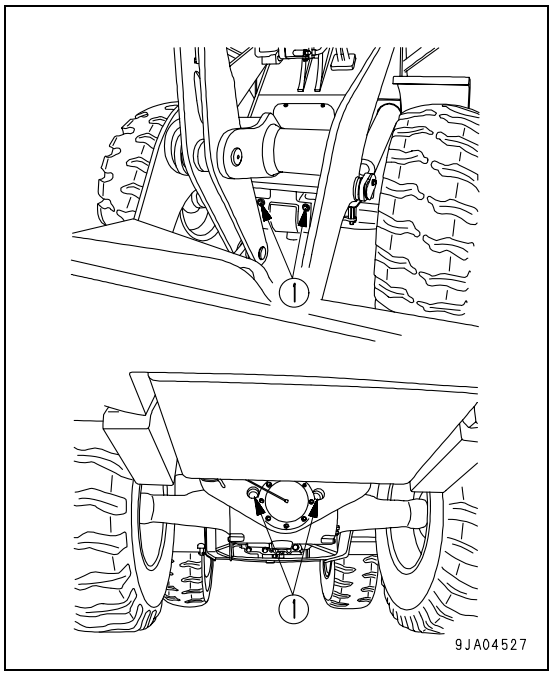

2. With the brake pedal depressed, insert inspection gauge (2) into the tooth portion of piston (3) and plate (4).
3. If the inspection gauge can be inserted into the tooth portion, the disc has reached the wear limit.
   Please ask your Komatsu distributor to carry out the replacement.
4. After checking, install check plug (1).
   Tightening torque: 127 to 177 N·m (13 to 18 kgf·m, 94.0 to 130.2 lbft)

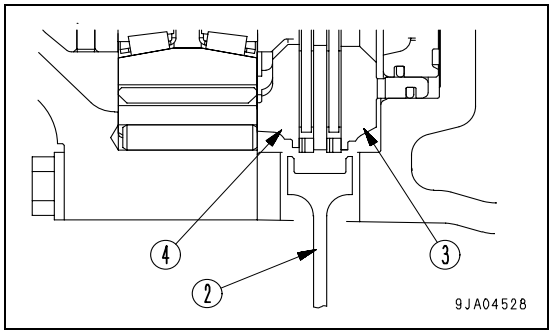

Clean and check turbocharger

If there is carbon or oil sludge stuck to the blower impeller, it will lower the performance of the turbocharger or cause it to break, so ask your Komatsu distributor to carry out the cleaning.

Check accumulator gas pressure

When carrying out the EVERY 2000 HOURS SERVICE or EVERY YEAR SERVICE or when making periodic replacement of the critical safety parts, please ask your Komatsu distributor to check the accumulator gas pressure.

Check vibration damper

Check that there are no cracks or peeling in the outside surface of the rubber.
If any cracks or peeling are found, contact your Komatsu distributor to have the parts replaced.

https://truckmanualshub.com/

Every 4000 hours service

Maintenance for every 50, 100, 250, 500, 1000 and 2000 hours service should be carried out at the same time.

Lubricating

1. Using a grease pump, pump in grease through the grease fittings marked by the arrows.
2. After greasing, wipe off any old grease that was pushed out.

(1) Front drive shaft (2 places)

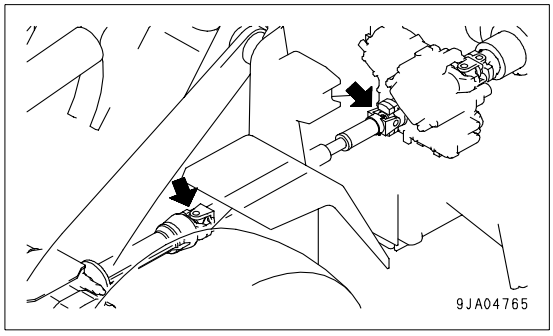

(2) Rear drive shaft (2 places)

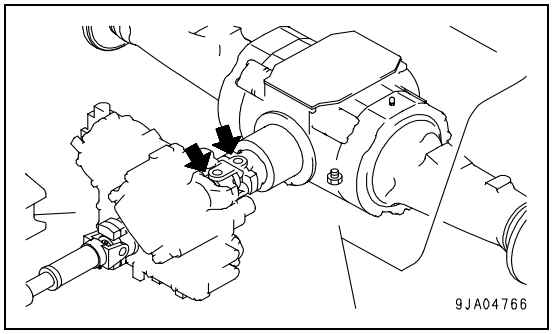

(3) Drive shaft spline (1 place)

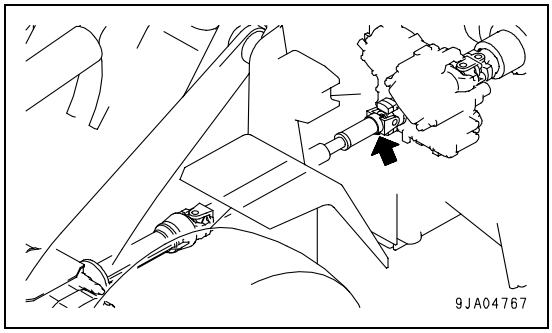

Check water pump

Check that there is no play in the pulley or any grease leakage, water leakage, or clogging of the drain hole. If any abnormality is found, contact your Komatsu distributor for disassembly and repair or replacement.

https://truckmanualshub.com/

TECHNICAL DATA

https://truckmanualshub.com/

Technical data

	Item			Unit	
	Operating weight (including 1 operator: 75 kg (165 lb).)			kg (lb)	12,525 (27,618)
	Normal load			kg (lb)	3,540 (7,806)
	Bucket capacity	Heaped		m^3 (cu.yd)	2.0 (2.6)
	Engine model			-	Komatsu SAA6D102E diesel engine
	Flywheel horsepower			kW (HP)/rpm	101kw (135)/2000
A	Overall length			mm (ft in)	7,575 (24'10“)
B	Overall height			mm (ft in)	3,200 (10'6“)
C	Max. dimension when shaking bucket			mm (ft in)	5,400 (17'9“)
D	Overall width			mm (ft in)	2,470 (8'1“)
E	Min. ground clearance			mm (ft in)	465 (1'6“)
F	Bucket width			mm (ft in)	2,560 (8'5“)
G	Clearance	Cutting edge		mm (ft in)	2,730 (8'11“)
H	Reach	Cutting edge		mm (ft in)	1,230 (4'0“)
I	Dump angle			degrees	45
	Min. turning radius	Out of chassis		mm (ft in)	5,920 (19'5“)
		Center of outside tire		mm (ft in)	4,950 (16'3“)
	Travel speed	Forward	1st	km/h (MPH)	4.0 - 13.0 (2.5 - 8.1)
			2nd	km/h (MPH)	13.0 (8.1)
			3rd	km/h (MPH)	18.0 (11.2)
			4th	km/h (MPH)	38.0 (23.6)
		Reverse	1st	km/h (MPH)	4.0 - 13.0 (2.5 - 8.1)
			2nd	km/h (MPH)	13.0 (8.1)
			3rd	km/h (MPH)	18.0 (11.2)
			4th	km/h (MPH)	38.0 (23.6)

https://truckmanualshub.com/

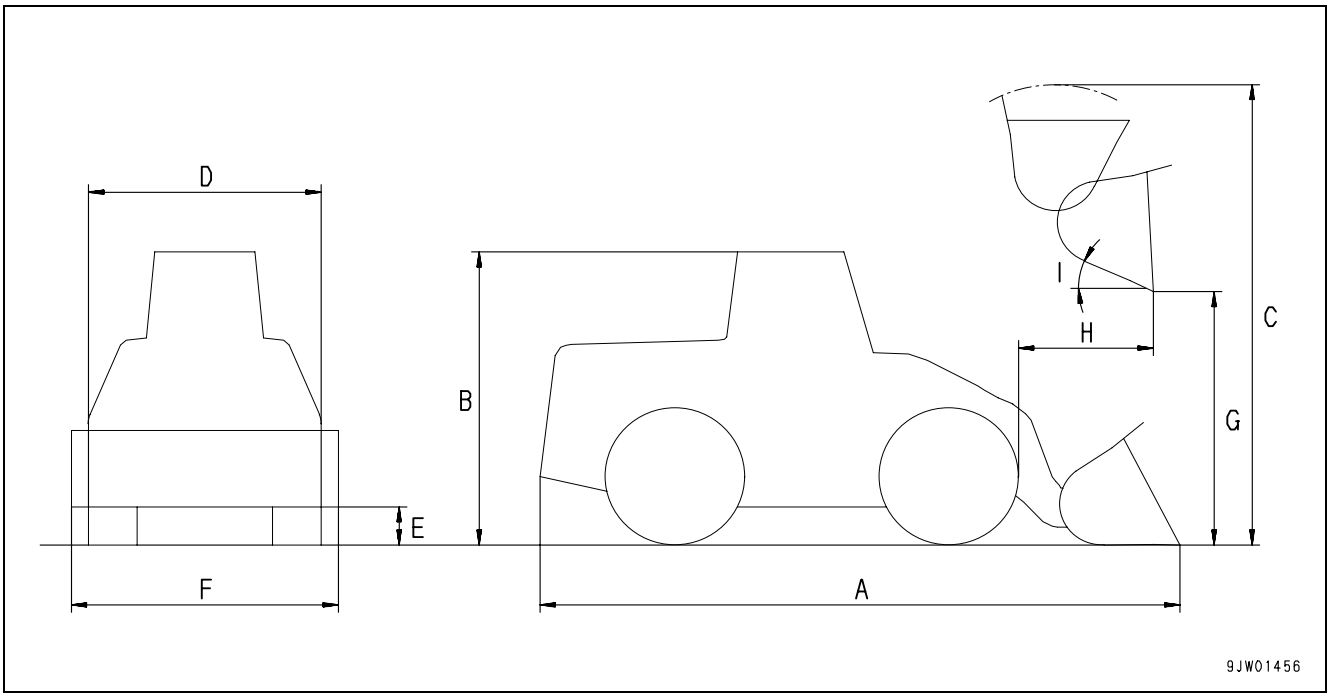

https://truckmanualshub.com/

Noise emission levels

Two signs are attached to the machine that state the noise level produced.

In accordance with guideline ISO 6396, the value for the sound pressure level measures is LpA = 72 dB/A.
In accordance with EC Directive 2000/14/EC, the guaranteed value for the sound power level measures is LWA = 106 dB/A.

No alterations may be made to the machine which could have an influence on the noise emission levels.

Vibration level

When used for its intended purpose, levels of vibration for the earthworking machine transmitted from the operator's seat are lower or equal to the test vibrations for the relative machinery class in compliance with ISO 7096. The actual accelaration value of the arms is less than or equal to 2.5 m/s^2. The actual acceleration value for the body is less than or equal to 0.5 m/s^2. These values were determined using a representative machine and with the help of the measurement procedures that are defined in the directives ISO 2631/1 and ISO 5349.

https://truckmanualshub.com/

ATTACHMENTS, OPTIONS

⚠ WARNING

Please read and make sure that you understand the safety volume before reading this section.

https://truckmanualshub.com/

Selecting bucket and tires

Select the most suitable bucket and tires for the type of work and the ground conditions on the jobsite.

Type of work	Bucket	Ground conditions	Tire
Loading products Loading and carrying products	Stockpile bucket (2.0 m^3 (2.6 cu.yd)	General ground conditions	20.5-25-12PR (L3 Rock)
		Leveled ground	20.5-25-12PR (L2 Traction)
		Soft ground	20.5-25-12PR (L2 Traction)

BOC indicates a bolt-on type cutting edge.

The displayed travel speed changes according to the tire size, so when installing optional tires, please contact your Komatsu distributor.

https://truckmanualshub.com/

Handling fork tool

Explanation of components

(1) Work equipment control lever

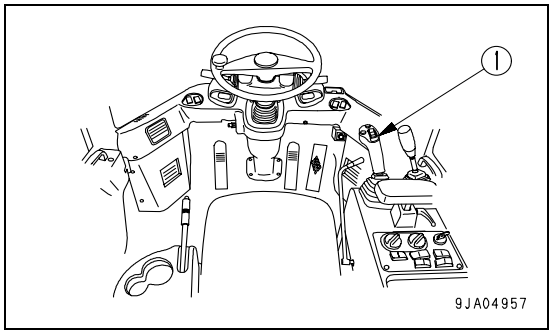

Work equipment lever

Use this lever (1) to operate the lift arm and fork.

NOTICE
Do not use the FLOAT position when lowering the fork.

Position (a): RAISE
When the work equipment control lever is pulled further from the RAISE position, the lever is stopped in this position until the lift arm reaches the preset position of the kickout, and the lever is returned to the HOLD position.
Position (b): HOLD
The lift arm and fork stop and remain in the same position.
Position (c): LOWER
Position (d): FLOAT
The lift arm moves freely under external force.
Position (e): TILT
When the work equipment control lever is pulled further from the TILT position, the lever is stopped in this position until the fork reaches the preset position of the positioner, and the lever is returned to the HOLD position.
Position (f): DUMP

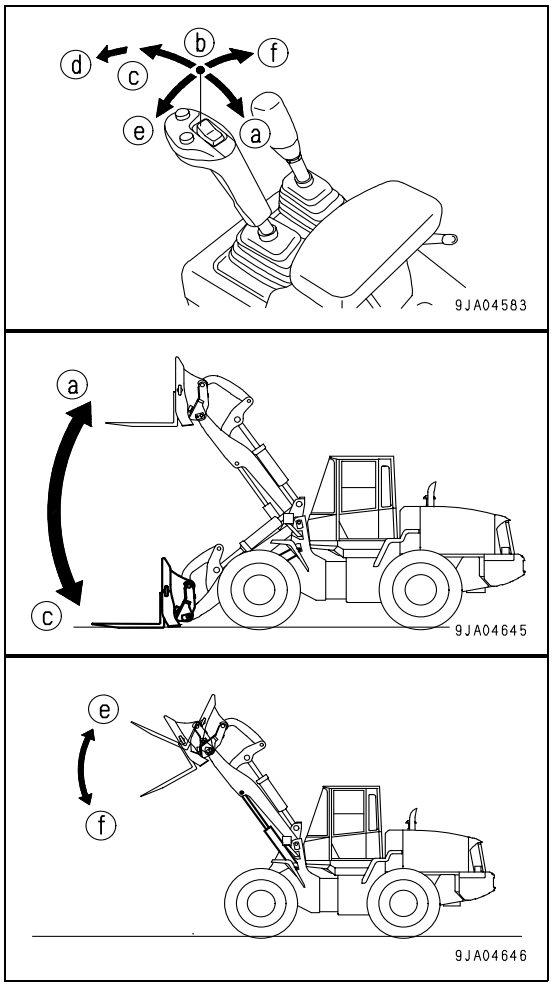

https://truckmanualshub.com/

Operation

The operating speed of the forklift is determined according to the configuration of the ground, condition under foot, and size of the operating area.

When operating the forklift, maintain the engine speed at near full speed, and carry out the operation with the speed range in 1st or 2nd.
Use 3rd or 4th speed when traveling without a load.

Loading operation

The following explanation of the method of operating the forklift does not cover all situations. The operating method differs according to each operating condition.
When operating the forklift, use the safest and most efficient method.

Loading

⚠ WARNING

- **When traveling with a load, do not turn suddenly or accelerate or decelerate suddenly. There is danger that the load will fall off or the machine will tilt.**
- **The fork tilt angle differs according to the load. If loads are stacked on top of each other, and the tilt angle is excessive, there is danger that the top load will extend over the backrest of the carriage and slip to the rear.**

1. Adjust the distance between the forks to match the size of the load.
   To ensure the stability of the load, make the distance between the forks as large as possible.
2. Set the forks horizontal, drive forward slowly so that the load is centered on the forks, and insert the forks under the load.

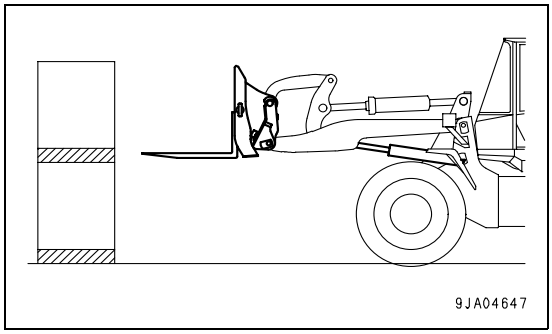

3. Insert the forks completely under the load and drive forward until the load is in contact with the backrest of the carriage.
4. Raise the forks so that they are several inches above the ground or the load under the forks, then tilt the forks and set so that the load rests against the backrest of the carriage.

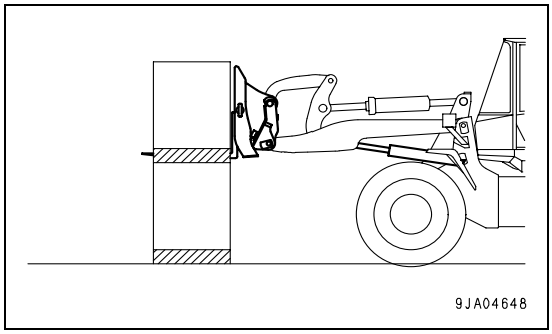

5. Check that there is no obstacle behind the machine, lower the load as far as possible, then drive the machine slowly in reverse.

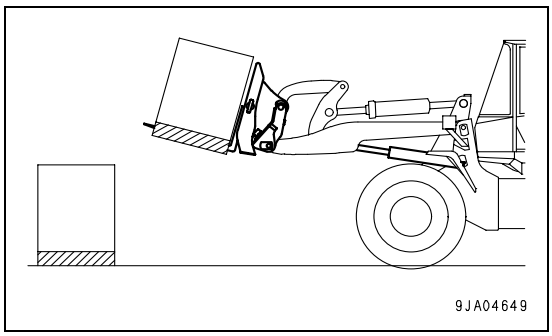

https://truckmanualshub.com/

6. Lower the load until it is close to the ground surface (30 inches from the ground surface).

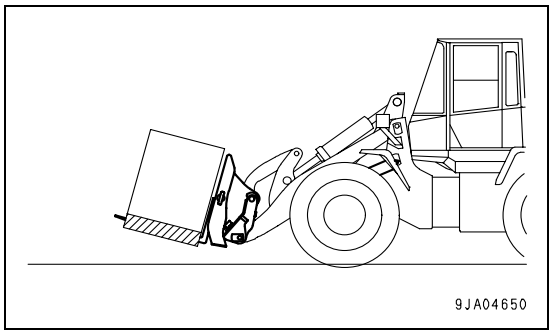

Transporting

WARNING

- **When traveling with a load, do not turn suddenly or accelerate or decelerate suddenly. There is danger that the load will fall off or the machine will tilt.**
- **The fork tilt angle differs according to the load. If loads are stacked on top of each other, and the tilt angle is excessive, there is danger that the top load will extend over the backrest of the carriage and slip to the rear.**

- Normally, keep the load near the ground surface when transporting. If the load must be transported when raised, be extremely careful when operating the steering.
- When transporting a load, carry out the operation with the speed range in 1st or 2nd.
- Use 3rd or 4th speed when traveling without a load.
- The travel speed when transporting differs according to the conditions. Always travel at a speed that ensures safety. When transporting on rough ground or slopes, travel at low speed.
- When transporting on slopes, travel with the load on the uphill side.
- If the load obstructs the view to the front, travel facing in reverse.

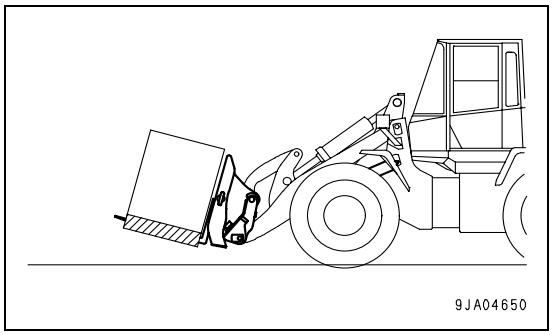

https://truckmanualshub.com/

Unloading

1. Set several inches above the position of the stacked load.

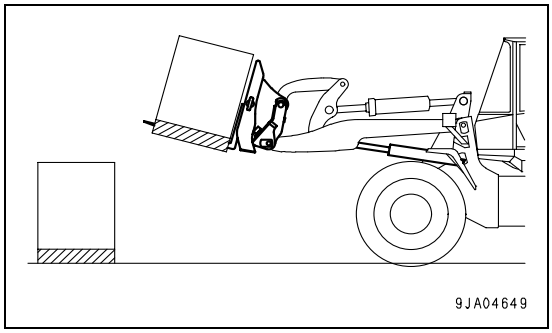

2. Drive slowly forward to the stacking point with the forks horizontal.
3. Lower the load.

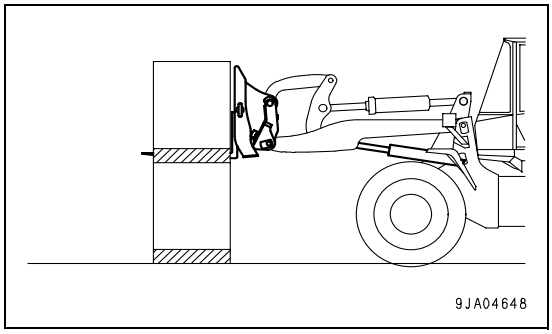

4. Drive the machine slowly in reverse and remove the forks from the load.
5. Lower the forks.

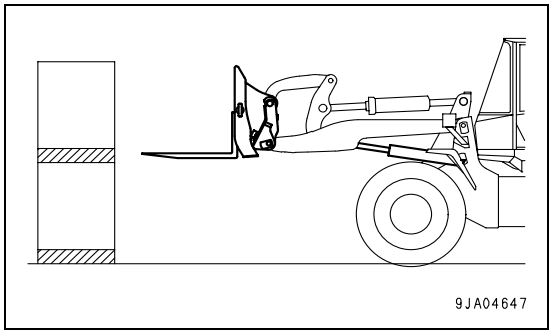

https://truckmanualshub.com/

Method of using 3 levers

Explanation of components

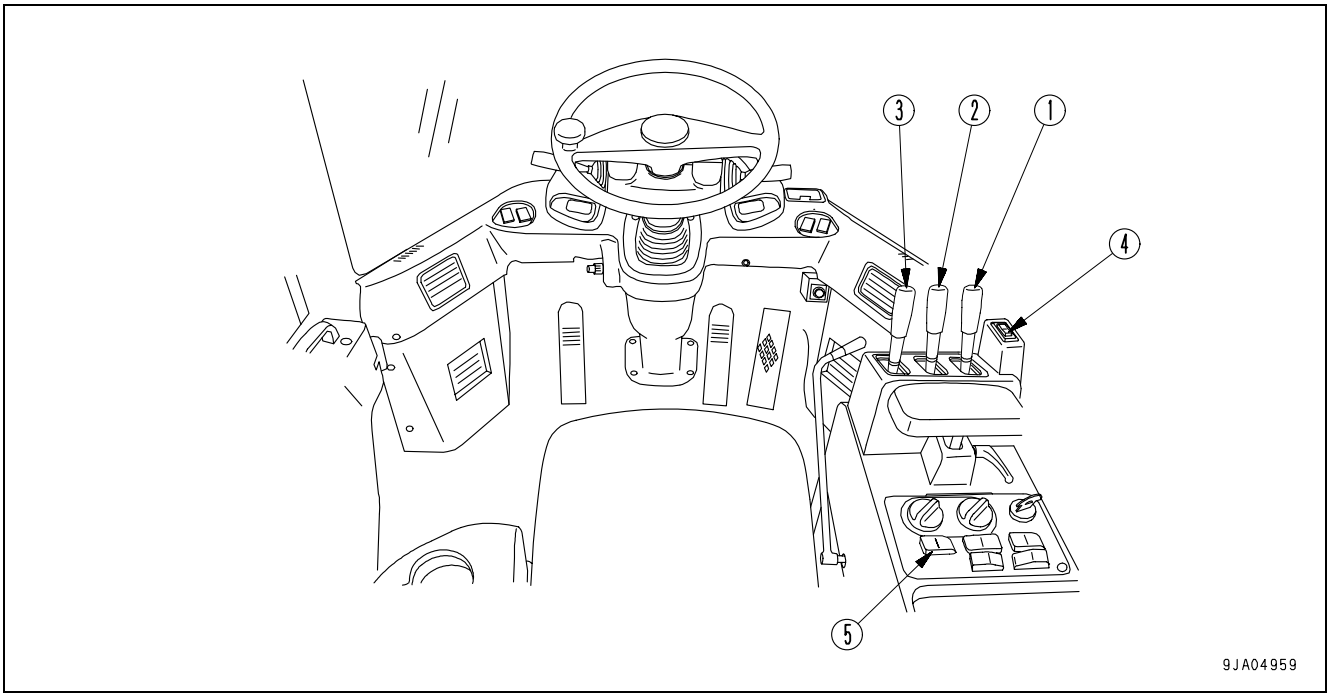

(1) Lift arm control lever	(4) Directional selector switch
(2) Bucket control lever	(5) Directional selector actuation switch
(3) Auxiliary control lever	

Lift arm control lever

This lever (1) is used to operate the lift arm.

NOTICE
Do not use the FLOAT position when lowering the bucket. Use the FLOAT position when leveling, see "Leveling operations on page 3-86".

Position (a): RAISE
When the lift arm control lever is pulled further from the RAISE position, the lever is stopped in this position until the lift arm reaches the preset position of the kickout, and the lever is returned to the HOLD position.
Position (b): HOLD
The lift arm is kept in the same position.
Position (c): LOWER
Position (d): FLOAT
The lift arm moves freely under external force.

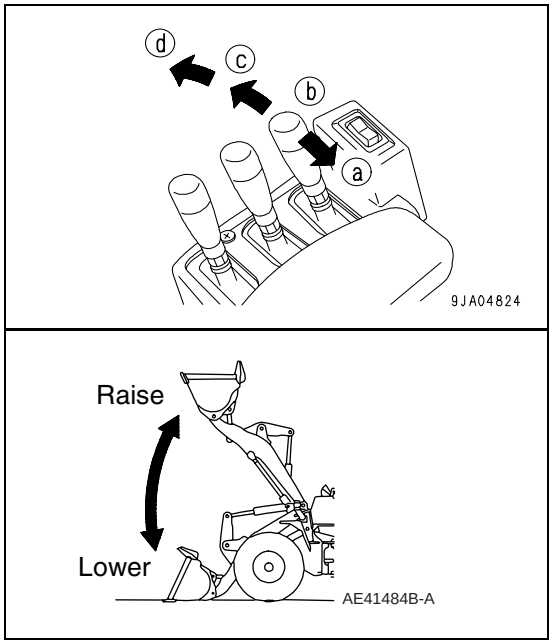

https://truckmanualshub.com/

Bucket control lever

This lever (2) operates the bucket.

Position (a): TILT
When the bucket control lever is pulled further from the TILT position, the lever is stopped in this position until the bucket reaches the preset position of the positioner, and the lever is returned to the HOLD position.
Position (b): HOLD
The bucket is kept in the same position.
Position (c): DUMP

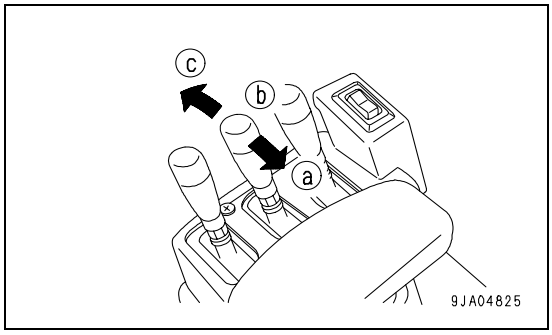

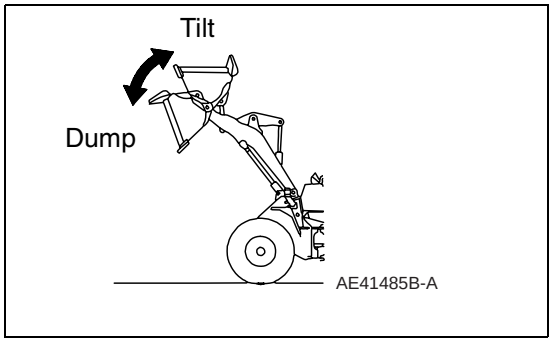

Auxiliary control lever

(When multi-purpose bucket is installed)
This lever (3) operates the clam on the multi-purpose bucket.

Position (a): Clam closes
Position (b): HOLD
The clam stops and remains in the same position.
Position (c): Clam opens

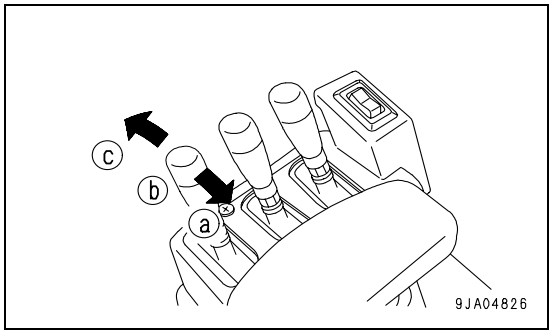

Directional selector switch

This switch (4) is used to switch the direction of travel of the machine between forward and reverse.
F Position: FORWARD
N Position: Neutral
R Position: REVERSE
Before operating this switch, check that the condition is as follows.

- Directional lever is at N
- Directional selector switch actuation switch is at ON

If the condition is not as above, the switch will not work.

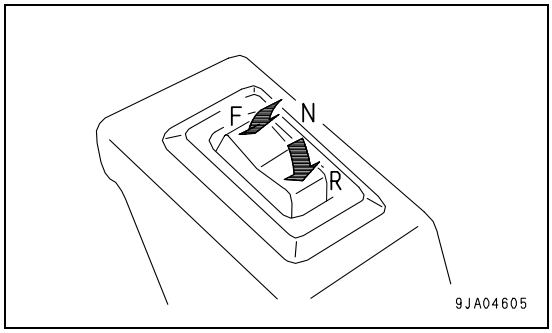

https://truckmanualshub.com/

Directional selector actuation switch

When this switch (5) is turned on, the directional selector switch is actuated.

Position (a): ON

The directional selector switch is actuated.

Position (b): OFF

The directional selector switch is turned off.

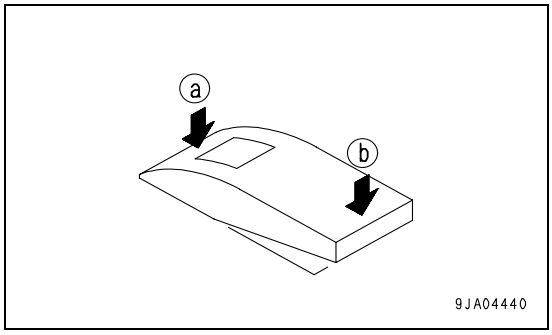

REMARK

- **Turn this switch ON when the directional lever and directional selector switch are at the neutral position. At any other position, this switch does not work.**
- **Even if the directional selector switch is functioning, when the directional lever is operated, the operation of the directional lever is given priority.**

https://truckmanualshub.com/

Operation

Using switch to change between forward and reverse

WARNING

- **When changing direction between FORWARD and REVERSE, check that the new direction of travel is safe. There is a blind spot behind the machine, so be particularly careful when changing direction to travel in reverse.**
- **Do not switch between FORWARD and REVERSE when traveling at high speed.**
- **When switching between FORWARD and REVERSE, depress the brake to reduce the travel speed sufficiently, then change the direction of travel. (Max.speed for changing direction: 13 km/h (8.1 MPH))**
- **When the directional selector switch actuation switch (3) is at the ON position, if the directional lever (1) is operated to FORWARD or REVERSE, the machine will travel in forward or reverse according to the operation of the directional lever, regardless of the position of the directional selector switch (2).**
- **Priority is given to the operation of the directional lever, so be careful when operating.**

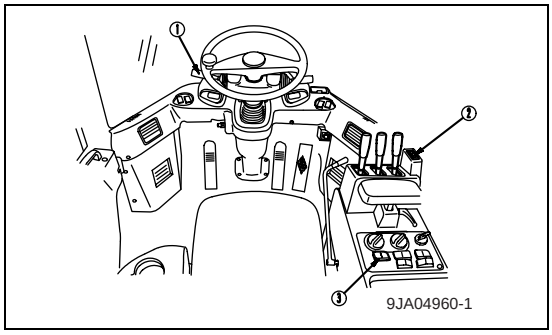

1. Place the directional lever (1) at the N position.

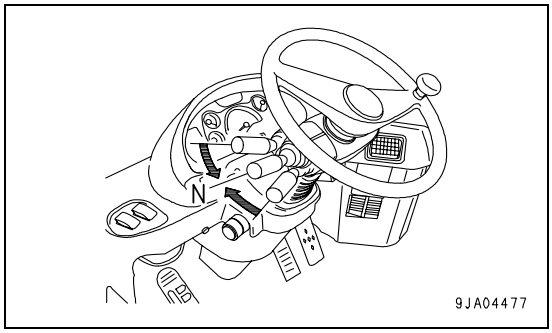

2. Place the directional selector switch (2) at the N position.

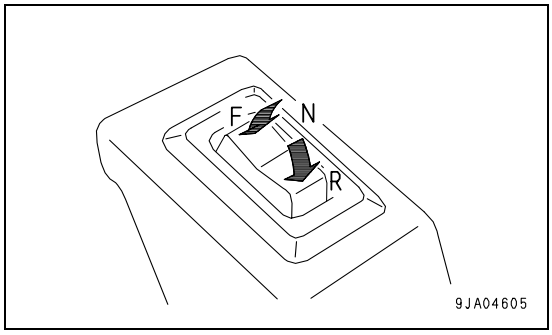

https://truckmanualshub.com/

3. Place the directional selector switch actuation switch (3) at the ON position (a).

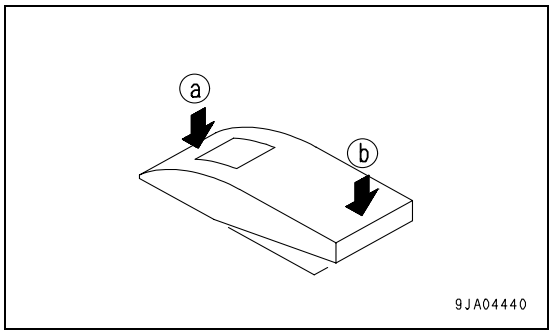

4. Place the directional selector switch (2) at the F (forward) or R (reverse) position.

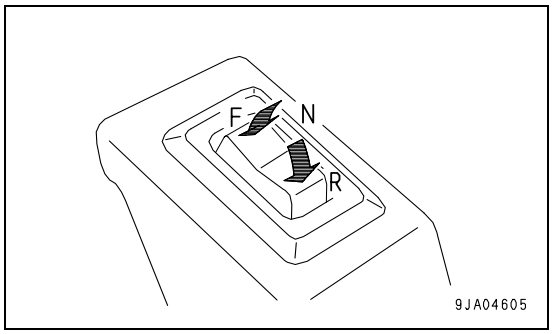

REMARK
When the directional selector switch actuation switch (3) is at the ON position, if the directional lever (1) is operated to FORWARD or REVERSE, the machine will travel in forward or reverse according to the operation of the directional lever, regardless of the position of the directional selector switch (2).
Priority is given to the operation of the directional lever.
When using directional selector switch (2) again, set directional lever (1) and directional selector switch (2) to the N position.

https://truckmanualshub.com/

Central lubrication system

Operating the central lubrication system

The pump with the grease container is located at the left of the engine bonnet, above the fender.

1. Turn the ignition switch to ON.
   This switches on the grease pump.

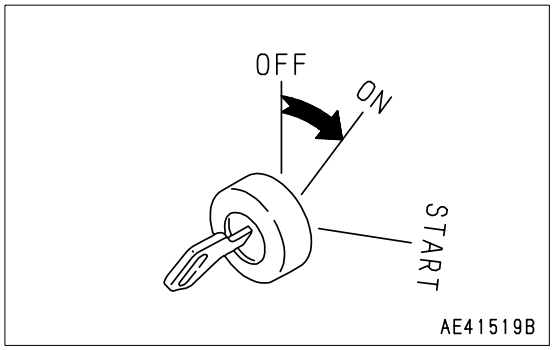

2. Watch the grease container through the rear window.
   If the mixer blades are turning inside the grease container, the lubrication system is OK.
   If the mixer blades are not turning, no automatic lubrication is taking place.
   To eliminate the malfunction, contact your Komatsu dealer.

Display and control unit

The display and control unit is protected by a transparent plastic cover against splashing water and mechanical damage. For programming, the cover has to be dismounted and, following programming, reattached with a screwdriver.

Led-display

1. Seven-segment display: Values and operating state
2. Pause time (PAUSE h/lmp)
3. Pump operation (CONTACT min/lmp)
4. Monitoring of system function by means of an external cycle switch (CS)
5. Monitoring of system function by means of an external pressure switch (PS)
6. Fault message (FAULT)

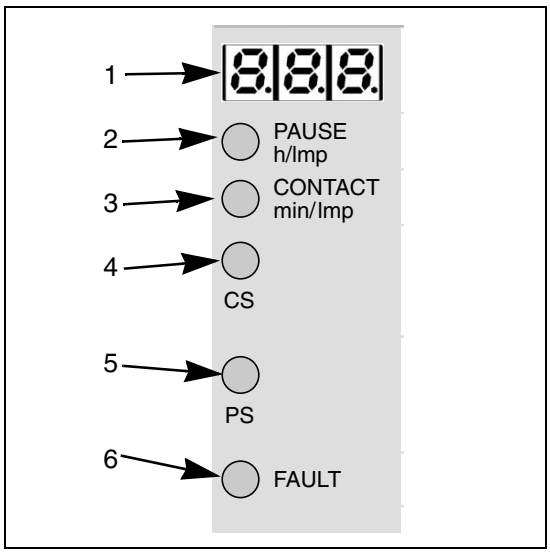

https://truckmanualshub.com/

Pushbuttons

1. Turn on display
   Display values and parameters
   Set values and parameters

2. Change between programming and display mode
   Confirm values (SET)

3. Activatev intermediate lubrication
   Clear fault message (DK)

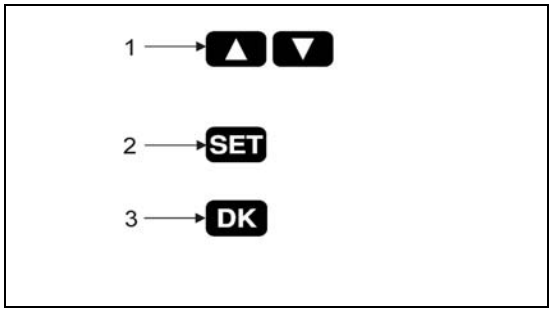

Changing the lubrication interval times

The settings when shipping from factory are as follows:
Greasing interval: after 1 hour
Greasing time: 8 minutes.

Step	Key	Display	
1	SET Press for more than 2s	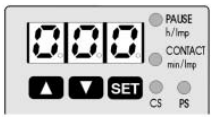	000 in display flashes
2	SET Press briefly (confirm code)	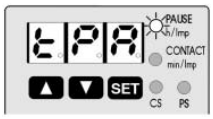	Automatically indicates first parameter **Example:** Pause in timer operationÒ LED PauseÒflashes
3	SET Press briefly	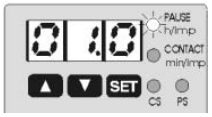	Pause time 1 h
4	▲ ▼	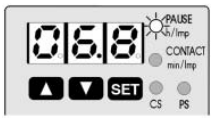	Set new value **Example:** 6.8 h = 6 h 48 min
5	SET Press briefly (confirm new value)	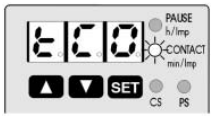	Indicates next parameter Pump running time in timer modeÒ LED ContactÒflashes
6	SET Press briefly	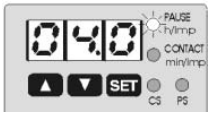	Pump running time 4 min
7	▲ ▼	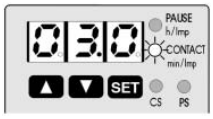	Set new value **Example:** 3 min
8	SET Press briefly	Confirm new value	
9	SET Press for more than 2s	Changes are written to the memory, and the LED indicators extinguish.	

https://truckmanualshub.com/

https://truckmanualshub.com/

INDEX

https://truckmanualshub.com/

https://truckmanualshub.com/

Index

A

Adjust 3-54
After starting engine
  Checks 3-70
  Operations 3-70
Air conditioner 3-48
Attachments 6-1
Auxiliary control lever 6-8

B

Bucket
  Selecting 6-2

C

Cab door inner lock 3-44
Cab door open lock 3-44
Cab window open lock
cancel knob 3-44
CE-conforming equipment 1-16
Central lubrication system 6-12
Check before starting engine 3-54
Control levers 3-38
Coolant 4-4
  Selection 4-9
  Use 4-8

D

Dimensions 1-15
Directions of machine 1-6

E

Electric system
  Outline 4-6
Emergency lowering system 2-20
Engine serial No. plate and position 1-7
Equipment, CE-conforming 1-16

F

Fire extinguisher 2-7
First aid kit 2-7
Foreword 1-2
Fuel 4-4
  Selection 4-9
  Use 4-8
Fuse 3-45

G

General precautions 2-7
General view 3-3
  Controls 3-4
  Gauges 3-4
  Machine 3-3
Grease pump 3-43

H

Handling cab wiper 3-53
Handling for tool 6-3
  Explanation of components 6-3
  Operation 6-4
Handling hydraulic quick coupler 3-81

I

Introduction 1-6

L

Lifting machine 3-100
Loading 3-98
Locking 3-95
Long-term storage 3-106
  After storage 3-106
  Before storage 3-106
  During storage 3-106
Lubricants
  Selection 4-9
  Use 4-8

M

Machine serial No. plate and position 1-7
Maintenance
  Guide 4-2
  Schedule chart 4-17
Monitor 3-6
Moving machine 3-73

N

Necessary information 1-7
Noise emission levels 5-4

O

Oil 4-4
Operating data 1-15
Operation 3-54
  Checks after completion 3-95
  Cold weather 3-103
    After cold weather 3-105
    After completion of work 3-105
    Operation for Steering hydraulic 3-105
    Precautions for low temperature 3-103
Options 6-1

P

Parking machine 3-93
Pedals 3-38
Performing oil clinic 4-4
Position of service meter 1-8
Power outlet 3-47
Precautions for maintenance 2-28
Precautions for operation 2-16, 3-89
  Battery 2-25
  Operation 2-17
  Starting engine 2-16
  Towing 2-27
  Transportation 2-24
Precautions with tires 2-35

S

Safety 2-1
Safety bar 3-43
Safety critical parts
  Periodic replacement 4-15
Safety information 1-4
Safety labels 2-3
  Location of safety labels 2-3
  Safety labels 2-4
Service
  Outlines 4-4
Service procedure 4-19
  Check before starting 4-37
  Every 100 hours service 4-39
  Every 1000 hours service 4-50
  Every 2000 hours service 4-54
  Every 250 hours service 4-41

https://truckmanualshub.com/

Every 4000 hours service 4-58
Every 50 hours service 4-38
Every 500 hours service 4-47
Initial 250 hours service 4-19
When required 4-20
Slow blow fuse 3-46
Starting engine 3-68
Steering tilt lock lever 3-41
Stopping engine 3-72
Checks after 3-95
Stopping machine 3-73
Switches 3-30
T
Table to enter serial No. and distributor 1-8
Technical data 5-2
Noise emission levels 5-4
Vibration level 5-4
Tires 3-96
Selecting 6-2
Torques
List 4-13
Standard tightening 4-13
Towing pin 3-43
Traction control 3-32
Transportation 3-98
Procedure 3-98
Troubleshooting 3-107
If battery is discharged 3-109
Other trouble 3-112
Towing machine 3-107
When machine runs out of fuel 3-107
Turning 3-79
U
Unloading
Work with trailers 3-98
Using 3 levers 6-7
Components
Explanation 6-7
Operation 6-10
V
Vibration level 5-4
W
Wear parts 4-7
List 4-7
Weights 1-15
Work equipment
Adjusting posture 3-90
Operation 3-80
Work possible 3-84

https://truckmanualshub.com/