https://truckmanualshub.com/

https://truckmanualshub.com/

Medium Duty
Body Builder's Manual

Model: K270/K370

Built 2017 & Later

Body Builder's Manual Contents

https://truckmanualshub.com/

Figures iii
Tables v
Abbreviations vi
Section 1 Introduction
Section 2 Safety & Compliance
SAFETY SIGNALS 2-1
FEDERAL MOTOR VEHICLE SAFETY STANDARDS COMPLIANCE 2-2
Incomplete Vehicle Certification 2-2
Noise and Emissions Requirements 2-3
Section 3 Dimensions
FRAME HEIGHT 3-1
TURNING RADIUS 3-2
CAB TILT 3-3
Model K270 W/19.5 Tires 3-3
Model K270/K370 W/22.5 Tires 3-3
OVERALL DIMENSIONS 3-4
Side View - Model K270/K370 3-4
Front and Rear Views — Model K270/K370 3-7
DETAIL VIEWS3-10
Left side: Chassis Heights – Model K270/K370 3-10
Components Locations –Model K270/K370 3-12
Crossmember Locations—Model K270/K370 3-14
Frame Rail Configurations 3-16
Battery Box, Fuel Tanks and Air Tanks — Model K270/K370 3-17
Exhaust Canister Locations –Model K270/K370 3-18
Side View – Model K270/K370 Clear Rail Package 3-19
Reyco 79KB Single Rear Axle Hendrickson HAS Single Rear Axle 3-20
TIRE DATA 3-20
FRAME AND CAB RELATED HEIGHTS 3-20
GROUND CLEARANCES 3-20
PTO CLEARANCES 3-21
Section 4 Exhaust & Aftertreatment
EXHAUST AND AFTERTREATMENT INFORMATION 4-1
General Guidelines for DEF System 4-3
Installation Requirements and Dimensions for DEF System 4-3
Measurement Reference Points 4-4
Routing to the Dosing Module (Injector) 4-5
GENERAL EXHAUST INFORMATION 4-6
Section 5 Frame Layouts And Body Mounting
FRAME LAYOUTS 5-1
Visual Index 5-1
CRITICAL CLEARANCES 5-4
Rear Wheels and Cab 5-4
Body Mounting Using Brackets 5-5
Frame Sill 5-5
Brackets 5-6
Mounting Holes 5-6
Frame Drilling 5-7
Hole Location Guidelines 5-7
BODY MOUNTING USING U–BOLTS 5-7
Spacers 5-7
REAR BODY MOUNT 5-9

https://truckmanualshub.com/

Section 6 Frame Modifications
FRAME MODIFICATIONS 6-1
Introduction 6-1
DRILLING RAILS 6-1
MODIFYING FRAME LENGTH 6-1
CHANGING WHEELBASE 6-1
CROSSMEMBERS 6-2
TORQUE REQUIREMENTS 6-3
Section 7 Electrical
ELECTRICAL INTRODUCTION 7-1
ELECTRICAL CIRCUITS 7-1
Capacity 7-1
Data Bus Communication 7-2
CAB/CHASSIS INTERFACE 7-3
The EJB (Electrical Junction Box) 7-3
CONTROLLERS 7-6
DASH CONTROLS 7-7
MODEL K270/K370 PTO WIRING INFORMATION 7-11
Appendix A Vehicle Identification
VEHICLE IDENTIFICATION NUMBER A-1
VIN Location A-1
Chassis Number Locations A-1
CERTIFICATION LABELS A-2
Components and Weights Label A-2
Tire/Rim and Weight Rating Data Label A-2
Incomplete Vehicle Certification Label A-2
COMPONENT IDENTIFICATION A-3
Engine Identification A-3
Transmission Identification A-4
Front Axle Identification A-4
Rear Axle Identification A-4

Appendix B Weight Distribution
INTRODUCTION B-1
Abbreviations B-1
CALCULATIONS B-2
Weight Distribution without Body B-2
Weight Distribution with Body B-4
Chassis Weights B-4
Weight Distribution Analysis B-8
Body Length B-8

Figures

https://truckmanualshub.com/

Figure 2-1 Incomplete Vehicle Certification Document 2-2
Figure 2-2 Locations of Certification Labels – Driver's Door & Frame 2-2
Figure 3-1.1 Side View —Model K270 W/19.5 Tires Cab tilt Height and Pivot location Measurement 3-3
Figure 3-1.2 Side View —Model K270/K370 W/22.5 Tires Cab tilt Height and Pivot location Measurement 3-3
Figure 3-2.1 Side View —Model K270/K370 Height and Length Measurement 3-4
Figure 3-2.2 Side View —Model K270/K370 Height and Length Measurement With Clear Rail Package 3-6
Figure 3-3.1 Front & Rear View —Model K270/K370 3-7
Figure 3-3.2 Model K270/K370 Laden 22.5 Tires Front view: Width & Ground clearance Measurements: inches(mm) 3-8
Figure 3-3.3 Model K270 Laden 19.5 Tires Front view: Width & Ground clearance Measurements: inches(mm) 3-8
Figure 3-3.4 Model K270/K370 Laden Rear view: Width & Ground clearance Measurements: inches(mm) 3-9
Figure 3-4.1 Cab Floor: Side View, Left Side w/ 19.5 Tires 3-10
Figure 3-4.2 Cab Floor: Side View, Left Side w/ 22.5 Tires 3-11
Figure 3-5.1 Model K270/K370 W/22.5 Tires, Battery Box, Dual Fuel Tanks, Air Tank, DEF Tank and Crossmember Location Measured From Front Axle: inches (mm) 3-12
Figure 3-5.2 Model K270/K370 W/22.5 Tires, Battery Box, Fuel Tank, Air Tank, DEF Tank and Crossmember Location Measured From Front Axle: inches (mm) 3-12
Figure 3-5.3 Model K270/K370 W/22.5 Tires, Short wheelbase, Air tanks on RH side, Battery Box, Fuel Tanks, DEF Tanks And Crossmember Location Measured From Front Axle: inches (mm) 3-13
Figure 3-5.4 Model K270/K370 W/22.5 Tires, clear rail Package, Battery Box, Air Tank, Fuel tanks, DEF Tank, And Crossmember Location Measured From Front Axle: inches (mm) 3-13
Figure 3-6.1 Model K270/K370 Crossmember Locations 3-14
Figure 3-6.2 Model K270/K370 Crossmember Locations Measured from front Axle Centerline inches(mm) 3-14
Figure 3-7 Model K270/K370 Rail Measurements 3-16
Figure 3-8 Model K270/K370 Battery Box, Fuel Tank and Air Tanks Measurement mm (in) 3-17
Figure 3-9.1 Model K270/K370 Exhaust Measurements 3-18
Figure 3-9.2 Model K270/K370 Exhaust Measurements 3-18
Figure 3-10.1 Side View - Model K270/K370 CRP Laden Height and Length Measurement 3-19
Figure 3-10.2 Model K270/K370 Vertical Exhaust Measurements inches(mm) 3-19
Figure 3-11 Model K270/K370 Reyco & Hendrickson Single Rear Axle Measurements 3-20
Figure 3-12.1 PTO models installed on a 2000 Series Allison transmission 3-21
Figure 3-12.2 Model K270/K370 PTO Clearances 1 of 2 3-22
Figure 3-12.3 Model K270/K370 PTO Clearances 2 of 2 3-22
Figure 4-1.1 The DEF lines route to the after-treatment system 4.1
Figure 4-1.2 The DEF lines route to the Engine Coolant 4.2
Figure 4-2 Measurement Location of DEF Supply Module (Pump) 4-4
Figure 4-3 Measurement Location of DEF Dosing Module (Injector) 4-4
Figure 4-4 Orientation of Dosing Module 4-5
Figure 4-5 Routing DEF Lines and DEF Trap 4-5
Figure 4-6.1 Horizontal Exhaust Canister with Horizontal Tailpipe 4-6
Figure 4-6.2 Top view of Horizontal Exhaust Canister with Horizontal Tailpipe 4-6
Figure 4-6.3 Right view of Horizontal Exhaust Canister with Horizontal Tailpipe 4-7
Figure 4-6.4 Back view of Horizontal Exhaust Canister with Horizontal Tailpipe 4-7
Figure 4-7.1 Vertical Exhaust Canister with Horizontal Tailpipe 4-8
Figure 4-7.2 Top view of Vertical Exhaust Canister with Horizontal Tailpipe 4-8
Figure 4-7.3 Right view of Vertical Exhaust Canister with Horizontal Tailpipe 4-9
Figure 4-7.4 Back view of Vertical Exhaust Canister with Horizontal Tailpipe 4-9

https://truckmanualshub.com/

Figure 5-1.1 Horizontal Exhaust Canister, RH horizontal tailpipe, LH BOC rectangular fuel tank, LH BOC rectangular DEF tank and RH BOC battery box 5-2
Figure 5-1.2 Horizontal Exhaust Canister, RH horizontal tailpipe, Dual BOC rectangular fuel tank, LH BOC rectangular DEF tank and RH BOC battery box 5-2
Figure 5-1.3 Vertical Exhaust Canister, BOC Vertical tailpipe, LH BOC rectangular fuel tank, LH BOC rectangular DEF tank and BOC battery box 5-3
Figure 5-2 Minimum Clearance between Top Of Rear Tires And Body Structure Overhang 5-4
Figure 5-3 Minimum Back of Cab Clearance 5-4
Figure 5-4 Spacer between Frame Sill and Body Rail - Rubber or Plastic 5-6
Figure 5-5. High Compression Spring between the Mounting Bolt and Upper Bracket 5-6
Figure 5-6 Rubber Spacers between Brackets 5-6
Figure 5-7 Hole Locations Guidelines for Frame Rail and Bracket 5-6
Figure 5-8 Crossmember-Gusset Hole Pattern Requirements. [inches(mm)] 5-7
Figure 5-9 Acceptable U-Bolt Mounting with Wood and Fabricated Spacers 5-8
Figure 5-10 Clearance Space for Air Lines and Cables 5-8
Figure 5-11 Example of Fishplate Bracket at Rear End of Body, used with U-Bolts 5-9
Figure 6-1 Wheelbase Customization 6-1
Figure 6-2 Crossmember Added When Distance Exceeds 60 Inches (1524 mm) 6-2
Figure 7-1 Data Bus Communication Architecture 7-2
Figure 7-2.1 Electrical Junction Box Location 7-3
Figure 7-2.2 Inside View - Electrical Junction Box Location 7-3
Figure 7-3 LF Euro 6 Cab Interface Names 7-4
Figure 7-4 Controllers 7-6
Figure 7-5.1 Dash Controls-1 7-7
Figure 7-5.2 Dash Controls-2 7-7
Figure 7-6.1 Power Distribution Center 7-8
Figure 7-6.2 Power Distribution Center (Chassis) 7-9
Figure 7-7 Body Builder 9 Pin Connector 7-10
Figure 7-8.1 Typical PTO Wiring for Euro 6 LFNA – 12V PTO Solenoid 7-12
Figure 7-8.2 Typical PTO Wiring for Euro 6 LFNA – 24V PTO Solenoid 7-13
Figure 7-9 A 12-pin Deutsch connector and remote PTO Controls 7-14
Figure A-1 Vehicle Identification Number (VIN) A-1
Figure A-2 Drivers Door and Door Frame Label A-2
Figure A-3 Engine Identification Location A-3
Figure A-4 Front Axle Identification A-4
Figure A-5 Rear Axle Identification A-4
Figure B-1 Balanced Load: CGf 100 in. from front axle B-2
Figure B-2 Unbalanced Load: CGf 133 In. From Front Axle B-3
Figure B-3 Balanced Body Unloaded: CGf 184.7 in. (4691.45 mm) from front axle B-5
Figure B-4 Liftgate Example: CGf 322.2 in (8183.9 mm) from front axle B-5
Figure B-5. Balanced Body Loaded: CGf 184.7 in (4691.45 mm) from front axle B-7

Tables

https://truckmanualshub.com/

Table: Abbreviations Used vi
Table 3-1 Frame Height 3-1
Table 3-2 Turning Radius 3-2
Table 3-3 Cab Tilt Height 3-3
Table 3-4 Cab Pivot Location 3-3
Table 3-5 Overall Dimensions 3-5
Table 3-6.1 Tires-Laden Ground clearance W/22.5 Tires 3-8
Table 3-6.2 Tires-Laden Ground clearance W/19.5 Tires 3-8
Table 3-7.1 Battery Box Step and Cab Floor Measurements w/ 19.5 Tires 3-10
Table 3-7.2 Battery Box Step and Cab Floor Measurements w/ 22.5 Tires 3-11
Table 3-8 Floor to Frame Measurements 3-11
Table 3-9.1 Model K270/K370 Crossmember Location Measured From Front Axle Centerline 3-14
Table 3-9.2 Model K270/K370 Crossmember Location Measured From Front Axle Centerline for Clear Rail Package 3-15
Table 3-10 Frame Rail Strength Characteristics 3-16
Table 3-11 Model K270/K370 Exhaust Location Measured From BOC inches (mm) 3-18
Table 3-12 Model K270/K370 Exhaust Location Measured From BOC inches (mm) 3-18
Table 3-13 Model K270/K370 Reyco & Hendrickson Single Rear Axle: Ride Height Measurement 3-20
Table 5-1 Symbols 5-1
Table 6-1 Customary Grade 8 UNF or UNC 6-3
Table 6-2 U.S. Customary – Grade 8 Metric Class 10.9 6-3
Table 7-1 Additional Spare Circuits for Wiring 7-9
Table 7.2 Body Builder 9 Pin Connector 7-10
Table A-1. Model Year (Code) Designations A-1
Table B-1. Model K270/K370 Single Rear Axle “Bare” Chassis Tare Weights (no driver, no fuel) B-4
Table B-2.1. Model K270/K370 Weight Distribution and Chassis Rating Calculation (sample) B-7
Table B-3. Available Model K270/K370 Body Lengths B-9

https://truckmanualshub.com/

ABBREVIATIONS

Throughout this section and in other sections as well, abbreviations are used to describe certain characteristics on your vehicle. The chart below lists the abbreviated terms used.

Abbreviations Used

AE	AXLE TO END
AF	FRAME RAIL OVERHANG LENGTH BEHIND REAR
BFA	FRONT BUMPER TO FRONT AXLE LENGTH
BOC	BACK OF CAB
CA	CAB TO REAR AXLE
CBOC	CLEAR BACK OF CAB
CGF	CENTER GRAVITY OF LOAD FROM FRONT AXLE
CH	CAB HEIGHT
CLA	CENTER LINE OF AXLE
CRP	CLEAR RAIL PACKAGE
DEF	DIESEL EXHAUST FLUID
DSOC	DUAL SIDE OF CAB
EFF CA	USEABLE CARGO AREA
EOF	END OF FRAME
FAX	FRONT AXLE
FOC	FRONT OF CAB
FOR	FRONT OF RAIL
HA	HEIGHT AXLE
L	LOAD
LF	LOAD FRONT
LHUC	LEFT HAND UNDER CAB
LR	LOAD REAR
OAL	OVERALL VEHICLE LENGTH
R	ROOF
RHUC	RIGHT HAND UNDER CAB
SLR	STATIC LOAD RADIUS
SOC	SIDE OF CAB
TL	TOTAL LENGTH
TOC	TOP OF CLAMP
TOLC	TOP OF LOWER CLAMP
TOR	TOP OF RAIL
WB	WHEELBASE LENGTH

Abbreviations

https://truckmanualshub.com/

ACH-W	AUXILIARY CAB HEATER WEBASTO
AEBS	ADVANCED EMERGENCY BRELECTRONIC BRAKING SYSTEMAKING SYSTEM
AGC-A	AUTOMATIC GEARBOX CONTROL ALLISON
ALS-S	ALARM SYSTEM SCORPION
ASTRONIC LITE	AUTOMATED GEARBOX CONTROL ZF
ASTE-MODULE	ASTRONIC SELECTOR ECU
ASTMULTI-SPEED	AUTOMATED 12-SPEED GEARBOX
AXM-F/AXM-R	AXLE MODULATOR – FRONT/REAR
BBM	BODYBUILDER MODULE
CDS-4	CENTRAL DOOR LOCKING
DIP-5	DIGITAL INSTRUMENT PACK
DNR	DRIVE NEUTRAL REVERSE SWITCH
DTCO	DIGITAL TECHNOGRAPH
E-MODULE	AUTOMATED GEAR SELECTOR ZF
EAS	EXHAUST AFTER-TREATMENT SYSTEMN
EBS-3	ELECTRONIC BRAKING SYSTEM
ECSDC6	EURO 6 CUMMINS ENGINE
ECAS-4	AIR SUSPENSION
ELC	EXTERNAL LIGHTING CONTROLLER
ELS	EXTERNAL LIGHTING SWITCH
FMS	FLEET MANAGEMENT SYSTEM
IMMO	IMMOBILISER
LDWS	LANE DEPARTURE WARNING SYSTEM
MTCO	MECHANICAL TECHNOGRAPH
SAC	SMART AIR CONTROL
SAS	STEERING ANGLE SENSOR
SWA	STEERING WHEEL SWITCHES
TI-2	TELEPHONE INTERFACE
VIC3	VEHICLE INTELLIGENCE CENTRE 3
VGT	VARIABLE GEOMETRY TURBOCHARGER
VSC	VEHICLE STABILITY CONTROL

https://truckmanualshub.com/

Section 1
Introduction

This manual provides body builders with appropriate information and guidelines useful in the body planning and installation process. This information will be helpful when installing bodies or other associated equipment.

This manual contains appropriate dimensional information, guidelines for mounting bodies, guidelines for modifying frames, electrical wiring information, and other information useful in the body installation process.

The intended primary users of this manual are body builders who install bodies and associated equipment on Model K270/K370 Medium Duty vehicles. Dealers who sell and service the vehicle will also find this information useful.

This Body Builder's Manual can be very useful when specifying a vehicle, particularly when the body builder is involved in the vehicle definition and ordering process. Early in the process, professional body builders can often contribute valuable information that reduces the ultimate cost of the body installation.

The DAVIE4 diagnostic tool is recommended for all Model K270/K370's built with the push button transmission shifter. The DAVIE3 (XDc) tool should be used with all Model K270/K370's built with the lever style transmission shifter. Both DAVIE4 and DAVIE3 should be connected to the blue, 16-pin OBD connector located on the passenger side of the dash.
Contact your local Kenworth dealer to utilize the DAVIE tools or order the required hardware and software.

This manual is not a maintenance manual or an operation manual.

- For chassis maintenance and repair information consult the PACCAR ServiceNet available in the Service Department of the selling dealer or order a custom shop manual or parts catalog for your vehicle through your local dealer.

- For chassis operating information consult the Operator's Manual, included with each vehicle. It can also be ordered from your local dealer.

Section 2
Safety & Compliance

https://truckmanualshub.com/

SAFETY SIGNALS

We have put a number of alerting messages in this book. Please read and follow them. They are there for your protection and information. These alerting messages can help you avoid injury to yourself or others and help prevent costly damage to the vehicle.

Key symbols and "signal words" are used to indicate what kind of message is going to follow. Pay special attention to comments prefaced by "WARNING", "CAUTION", and "NOTE." Please do not ignore any of these alerts.

Warnings, Cautions, and Notes

WARNING: When you see this word and symbol, the message that follows is especially vital. It signals a **potentially hazardous situation** which, if not avoided, could result in death or serious injury. This message will tell you what the hazard is, what can happen if you don't heed the warning, and how to avoid it.

Example:

WARNING! Be sure to use a circuit breaker designed to meet liftgate amperage requirements. An incorrectly specified circuit breaker could result in an electrical overload or fire situation. Follow the liftgate installation instructions and use a circuit breaker with the recommended capacity.

CAUTION: Signals a potentially **hazardous situation which**, if not avoided, could result in minor or moderate injury or damage to the vehicle.

Example:

CAUTION: Never use a torch to make a hole in the rail. Use the appropriate drill bit.

NOTE:

Provides general information. For example, the note could warn you on how to avoid damaging your vehicle or how to drive the vehicle more efficiently.

Example:

Note: Be sure to provide maintenance access to the battery box and fuel tank fill neck.

Please take the time to read these messages when you see them, and remember:

WARNING
Indicates a potentially hazardous situation which, if not avoided, could result in death or serious injury.

CAUTION
Signals a potentially hazardous situation which, if not avoided, could result in minor or moderate injury or damage to the vehicle.

NOTE
Useful information that is related to the topic being discussed.

https://truckmanualshub.com/

FEDERAL MOTOR VEHICLE SAFETY STANDARDS COMPLIANCE

As an Original Equipment Manufacturer (OEM), Kenworth Truck Co. ensures that our products comply with all applicable U.S. or Canadian Federal Motor Vehicle Safety Standards. However, the fact that this vehicle has no fifth wheel and that a Body Builder (Intermediate or Final Stage Manufacturer) will be doing additional modifications means that the vehicle was incomplete when it left the build plant. See next section and Appendix A for additional information.

Incomplete Vehicle Certification

An Incomplete Vehicle Document is shipped with the vehicle, certifying that the vehicle is not complete. See Figure 2–1.
In addition, affixed to the driver's side door frame or edge is an Incomplete Vehicle Certification label. See Figure 2–2.. For further information on Vehicle Certification and Identification, see APPENDIX A "VEHICLE IDENTIFICATION" or owner's manual.

NOTE: These documents list the U.S. or Canadian Federal Motor Vehicle Safety Standard regulations that the vehicle complied with when it left the build plant. You should be aware that if you add, modify or alter any of the components or systems covered by these regulations, it is your responsibility as the Intermediate or Final Stage Manufacturer to ensure that the complete vehicle is in compliance with the particular regulations upon completion of the modifications.

Figure 2-1. Incomplete Vehicle Certification Document

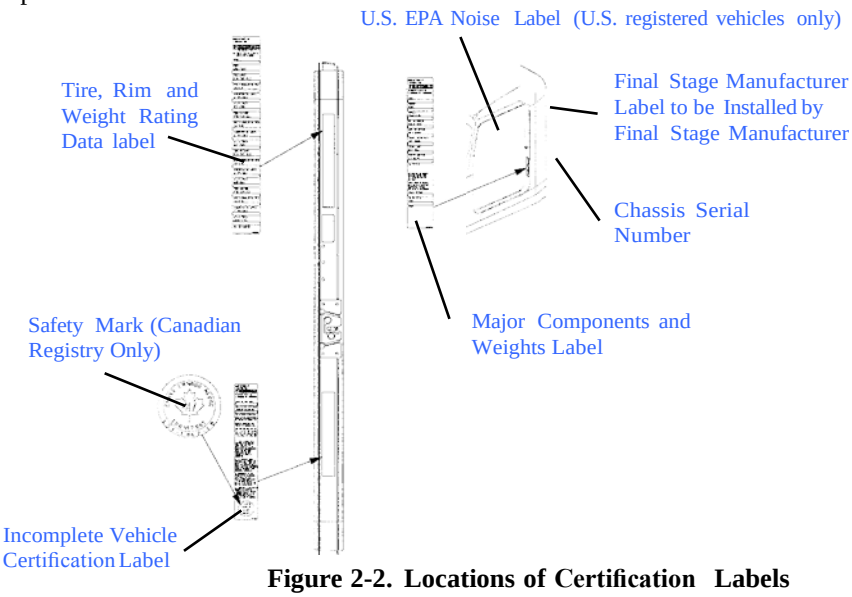

Figure 2-2. Locations of Certification Labels - Driver's Door and Frame

As the Intermediate or Final Stage Manufacturer, you should retain the Incomplete Vehicle Document for your records. In addition, you should record and retain the manufacturer and serial number of the tires on the vehicle. Upon completion of the vehicle (installation of the body and any other modifications), you should affix your certification label to the vehicle as required by Federal law. This tag identifies you as the "Intermediate or Final Stage Manufacturer" and certifies that the vehicle complies with Federal Motor Vehicle Safety Standards. (SeeFigure 2–2.) For Canadian final stage manufacturers see:
http://www.gazette.gc.ca/index-eng.html and http://www.tc.gc.ca/eng/acts-regulations/menu.htm for the regulations.

Or contact:
Transport Canada
Tower C, Place de Ville, 330 Sparks Street Ottawa,
Ontario K1A 0N5
(613) 990-2309
TTY: 1-888-675-6863

https://truckmanualshub.com/

Noise and Emissions Requirements

NOTE: This truck may be equipped with specific emissions control components/systems* in order to meet applicable Federal and California noise and exhaust emissions requirements. Tampering with these emissions control components/systems* is against the rules that are established by the U.S Code of Federal Regulations, Environment Canada Regulations and California Air Resources Board (CARB). These emissions control components/systems* may only be replaced with original equipment parts.

Additionally, most vehicles in North America will be equipped with a Greenhouse Gas (GHG) "Vehicle Emission Control Information" door label indicating its certified configuration. The vehicle components listed on this label are considered emission control devices.

Modifying (i.e. altering, substituting, relocating) any of the emissions control components/systems defined above will affect the noise and emissions performance/certification. Modifications that alter the overall shape and aerodynamic performance of a tractor will also affect the emission certification. If modifications are required, they must first be approved by the manufacturer. Unapproved modifications could negatively affect emissions performance/certification. There is no guarantee that proposed modifications will be approved.
Tires may be substituted provided the new tires possess a Coefficient of rolling resistance (Crr) equal to or lower than Crr of the original tires. Consult with your tire supplier(s) for appropriate replacement tires.
Contact the engine manufacturer for any requirements and restrictions prior to any modifications.

* For Cummins Contact 1-800-DIESELS or your local Cummins distributor. Reference AEB 21.102.
It is possible to relocate the DEF tank, however the relocation requirements need to be followed. Any variance from the relocation requirements may cause the emissions control components/systems to operate improperly potentially resulting in engine de-rate.

NOTE: All 2017 engine emissions certified vehicles will be equipped with an On-Board Diagnostics (OBD) system. The OBD system is designed to detect malfunctions of any engine or vehicle component that may increase exhaust emissions or interfere with the proper performance of the OBD system itself.

All diesel engines will be equipped with an On-Board Diagnostics (OBD) system. The OBD system consists of computer program on one or more of the vehicle's Electronic Control Units (ECUs). This program uses information from the control system and from additional sensors to detect malfunctions. When a malfunction is detected, information is stored in the ECU(s) for diagnostic purposes. A Malfunction Indicator Light (MIL) is illuminated in the dash to alert the driver of the need for service of an emission-related component or system.

To ensure compliance to emissions regulations, the final configuration of certain features of the completed vehicle must meet specific requirements. This section describes requirements relevant for only the most common or critical modifications done by body builders. For a complete description of acceptable modifications, see the application guidance available from the manufacturer of the engine installed in the chassis.

https://truckmanualshub.com/

Frame Height

Top of frame is the sum of the tires (SLR),the suspension, and the frame.

Table 3-1 Frame Height

Model			Model K370	Model K270	
Frame			10 ¼ inches	10 ¼ inches	
Front Suspension					
Rating			12K	10K	
Unladen			8.1”	8.1”	
Laden			5.9”	5.9”	
Rear Suspension					
HAS 210/230					
Unladen			8.5”	8.5”	
Laden			8.3”	8.3”	
79KB 21,000#					
Unladen			9.18”	9.18”	
Laden			6.75”	6.75”	
Tires (SLR)					**Tire GVWR**
245/70R 19.5		G	N/A	15.5”	26,720
265/70R 19.5		G	N/A	15.9”	30,990
255/70R 22.5		H	N/A	17.2”	31,300
275/70R 22.5		J	17.6”	17.6”	39,580
295/75R 22.5		G	18.8”	18.8”	35,050
11R	22.5	G	25.8”	19.5”	35,710

https://truckmanualshub.com/

TURNING RADIUS

Approximate turning radius specifications for the Model K270/K370 are listed (by wheelbase) in the following tables. Tables 3-2 Turning Radius and 3-3 Cab Tilt Height information for chassis with standard components. Optional components may give different results.

Table 3-2 Turning Radius

Model	Rear Axles	Wheelbase Range		Curb to Curb Est. Radius		Wall to Wall Radius Est.	
		Inch	mm	ft	m	ft	m
Model K270/K370	Single	121	3073.4	17.5	5.3	23.5	7.2
		142	3606.8	18.4	5.6	24.4	7.5
		146	3708.4	19.40	5.9	25.40	7.7
		156	35162.4	20.1	6.1	26.1	4.0
		158	3962.4	20.50	6.2	26.50	8.1
		164	4165.6	21.2	6.5	27.2	8.4
		168	4267.2	21.7	6.6	27.7	8.5
		170	4318	22.04	6.7	28.04	8.5
		182	4622.8	23.36	7.1	29.36	8.9
		194	4927.6	24.69	7.5	30.69	9.4
		206	5232.4	26.01	7.9	32.01	9.8
		218	5537.2	27.33	8.3	33.33	10.2
		230	5842	29.13	8.9	35.13	10.7
		242	6146.8	29.97	9.1	35.97	11.0
		274	6959.6	33.5	13.1	39.35	15.5

https://truckmanualshub.com/

CAB TILT

Model K270 W/19.5 Tires

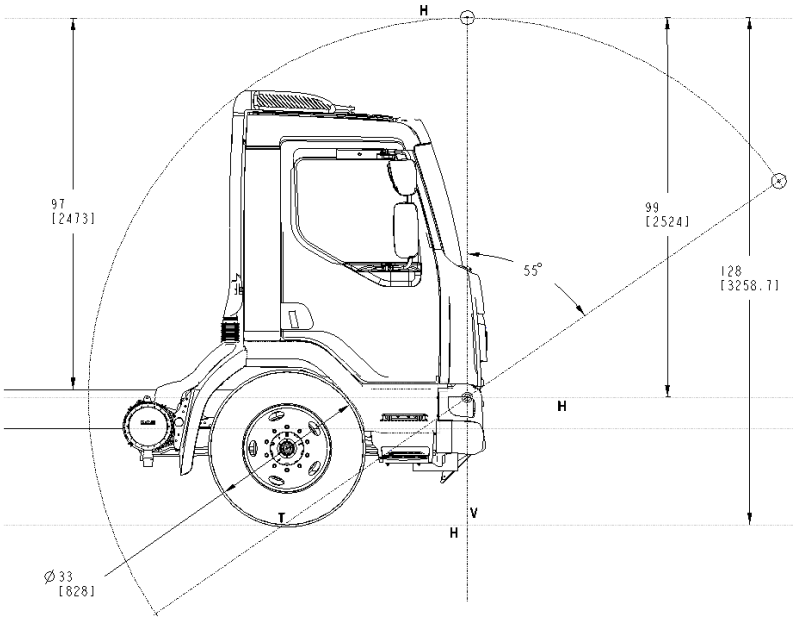

Figure 3-1.1 Side View —Model K270 W/19.5 Tires Cab Tilt Height and Pivot location Measurement

Table 3-3 Cab Tilt Height

CAB Tilt	Highest point inches (mm)
K270 W/19.5 Tires	128 (3258.7)
K270/K370 W/22.5	132 (3355.2)

Model K270/K370 W/22.5 Tires

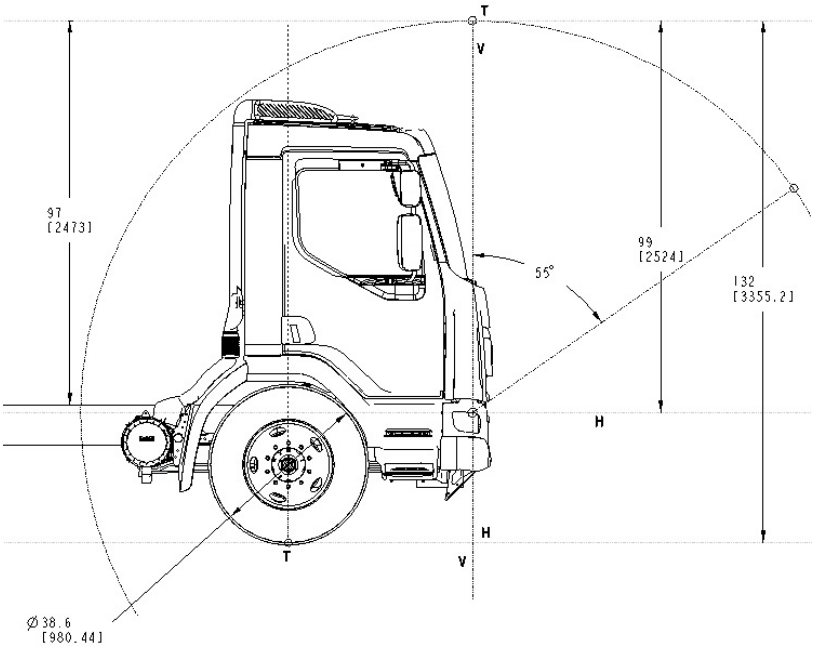

Figure 3-1.2 Side View —Model K270/K370 W/22.5 Tires Cab Tilt Height and Pivot location Measurement

Table 3-4 Cab Pivot location

Behind CAB	Pivot location
Above FOF	44.5MM
WL	209MM
CTR-CTR	978MM

https://truckmanualshub.com/

OVERALL DIMENSIONS

This section includes drawings of the base Model K270/K370, which includes:

On the pages that follow, detail drawings show particular views of each component of the vehicle. They illustrate important measurements critical to designing bodies of all types. See the “Contents” at the beginning of the manual to locate the drawing you need.

Side View – Model K270/K370

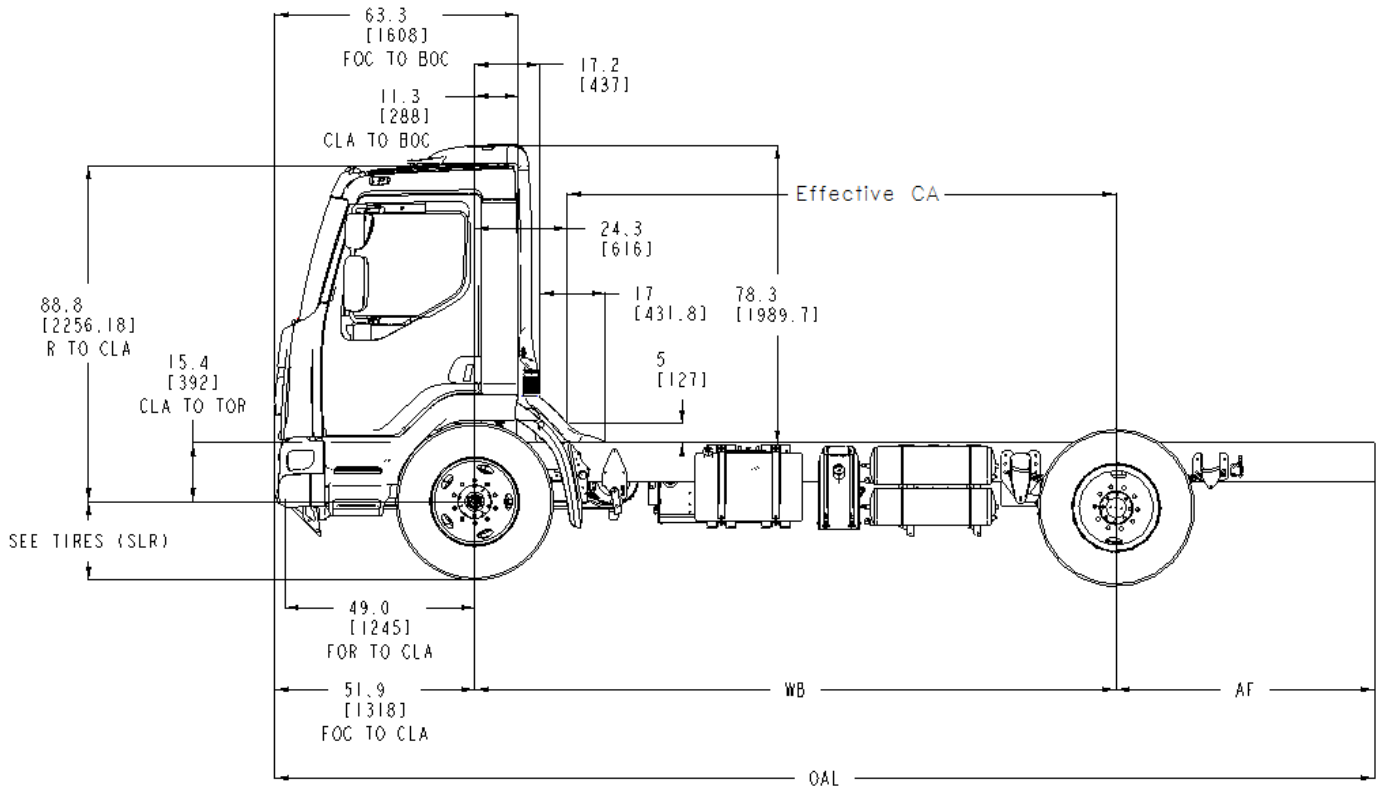

Figure 3-2.1 Side View —Model K270/K370 Laden Height and Length Measurement

Overall Model K270/K370 Dimensions:

1) FAX TO BOC = 11”

2) O.A .Length = 52”+WB+AF

3) Frame Length = 49”+WB+AF

4) Effective CA = WB-24.3” (24.3” is from C/L of front axle to the air cleaner duct with considering a 5” body spacer)

https://truckmanualshub.com/

Side View - Model K270/K370

Table 3-5 Overall Dimensions

Model	Wheelbase (in)	FAX to BOC (in)	FAX to Back of Intake / FAX to Back of Exhaust for K270/K370** (in)	Body Builder Useable CA* (in)	Overhang (in)	Cab to EOF (in)	Recommended Body Length (ft)
K270/K370 Horizontal Exhaust	146	11	25.3	120.7	72	192.7	16
	158	11	25.3	132.7	72	204.7	17
	164	11	25.3	138.7	72	210.7	18
	168	11	25.3	142.7	72	214.7	18
	170	11	25.3	144.7	72	216.7	18
	178	11	25.3	152.7	72	224.7	18
	182	11	25.3	156.7	84	240.7	20
	194	11	25.3	168.7	96	264.7	22
	206	11	25.3	180.7	108	288.7	24
	218	11	25.3	192.7	120	312.7	26
	230	11	25.3	204.7	120	324.7	27
	242	11	25.3	216.7	120	336.7	28
	274	11	25.3	248.7	120	368.7	30
K270/K370** Vertical Exhaust	121	11	31.5	89.5	72	155	10
	142	11	31.5	110.4	72	176	13
	146	11	31.5	114.4	72	180	14
	156	11	31.5	124.4	72	190	15
	158	11	31.5	126.4	72	192	15
	164	11	31.5	132.4	72	198	16
	168	11	31.5	136.4	72	202	16
	170	11	31.5	138.4	72	204	16
	178	11	31.5	146.4	72	218	18
	182	11	31.5	150.4	84	228	18
	194	11	31.5	162.4	96	252	20
	206	11	31.5	174.4	108	276	22
	218	11	31.5	186.4	120	300	24
	230	11	31.5	198.4	120	312	26
	242	11	31.5	210.4	120	324	27
	274	11	31.5	242.4	120	356	30

*With 5 inch spacer installed between frame rails and body

https://truckmanualshub.com/

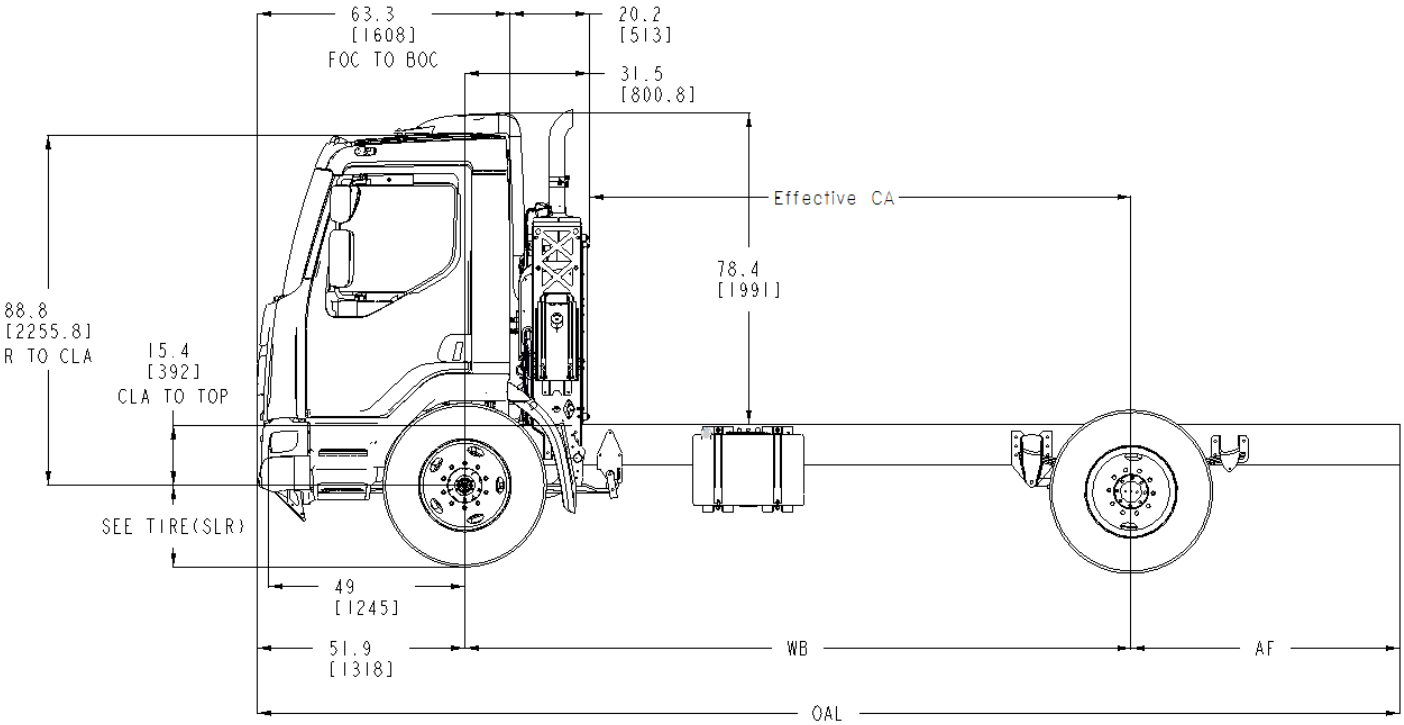

Figure 3-2.2 Side View —Model K270/K370 Laden Height and Length Measurement

Overall Model K270/K370 Dimensions:

1) FAX TO BOC = 11”

2) O.A .Length = 51.9”+WB+AF

3) Frame Length = 49”+WB+AF

4) Effective CA = WB-31.5

https://truckmanualshub.com/

Front and Rear Views — Model K270/K370

Inches (mm)

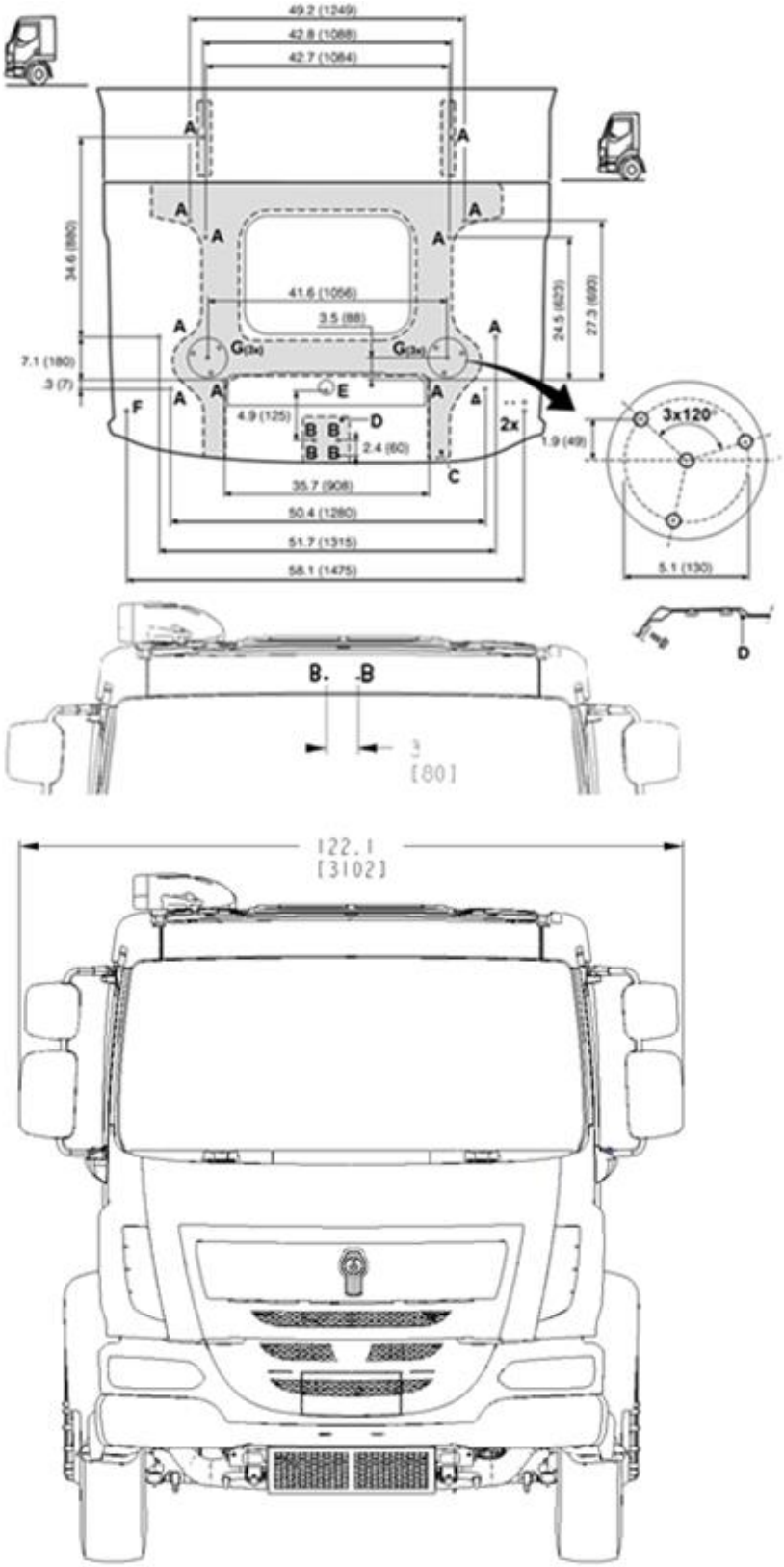

Figure 3-3.1 Front & Rear View —Model K270/K370

https://truckmanualshub.com/

Front and Rear Views — Model K270/K370

Table 3-6.1 Laden Ground Clearance W/22.5 Tires

TIRE SIZE	SLR	RADIATOR GROUND
275/22.5	17.6	7.7
295/22.5	18.8	8.9
11R/22.5	19.5	9.6

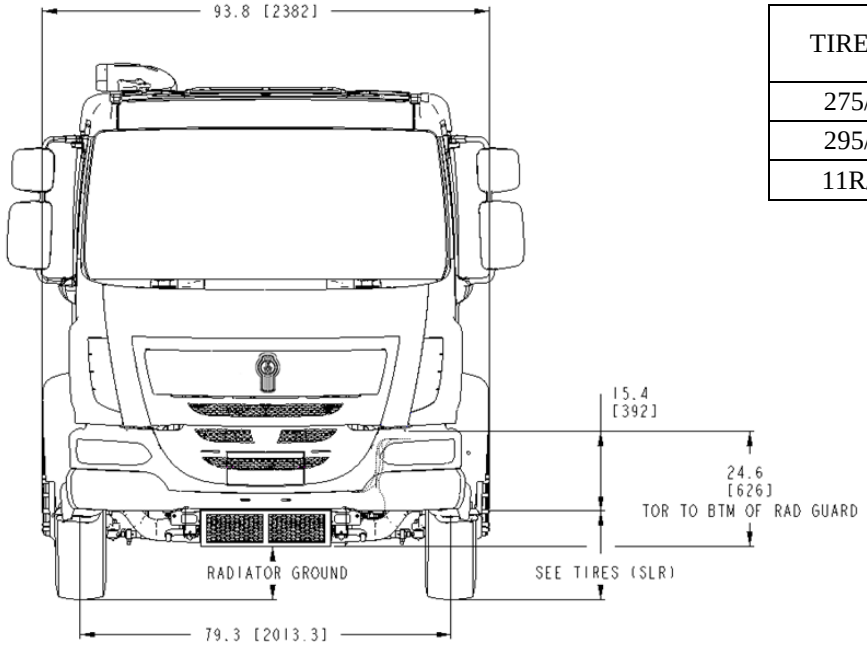

Figure 3-3.2 Model K270/K370 Laden 22.5 Tires Front View: Width and Ground Clearance Measurements: inches (mm).

Table 3-6.2 Laden Ground Clearance W/19.5 Tire

TIRE SIZE	SLR	RADIATOR GROUND
245/19.5	15.5	7.5
265/19.5	15.9	7.9

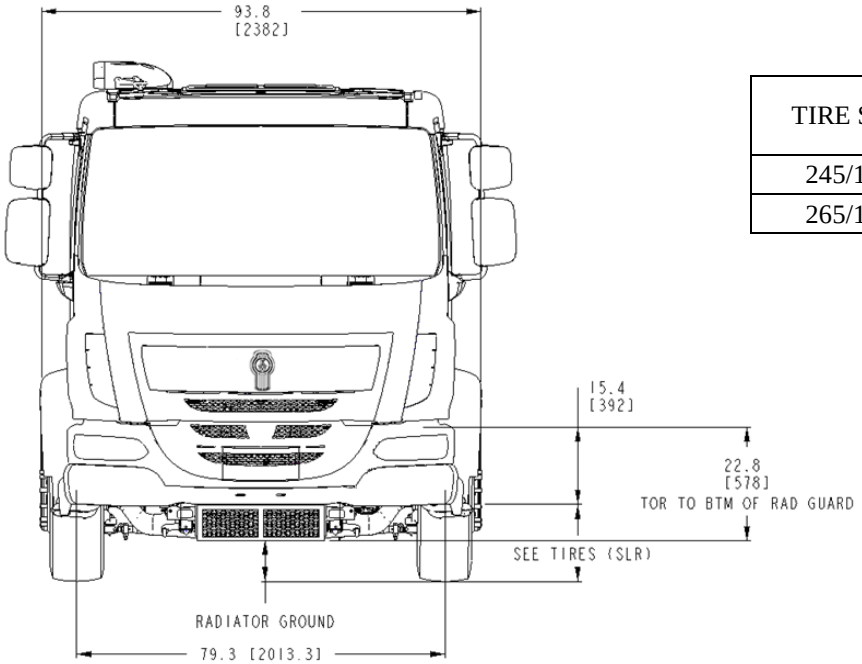

Figure 3-3.3 Model K270 Laden 19.5 Tires Front View: Width and Ground Clearance Measurements: inches (mm).

https://truckmanualshub.com/

Front and Rear Views — Model K270/K370

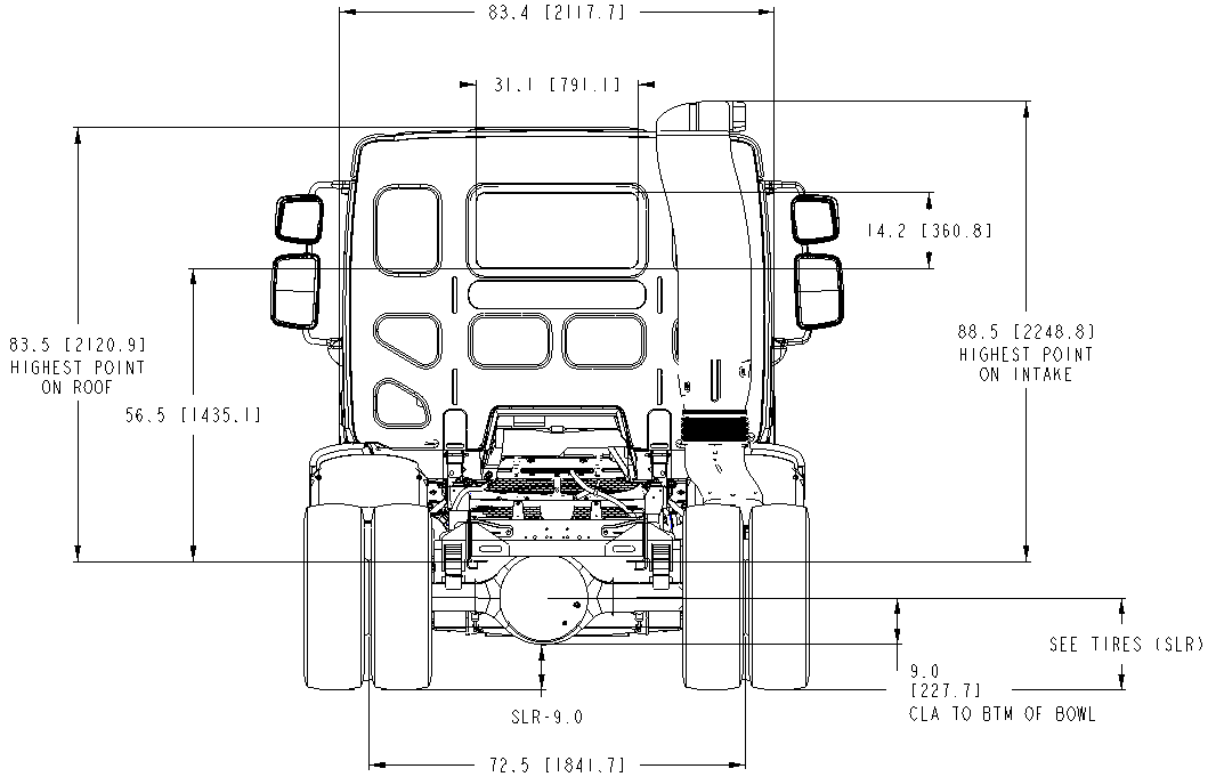

Figure 3-3.4 Model K270/K370 Laden Rear View: Width and Ground Clearance Measurements: inches (mm).

https://truckmanualshub.com/

Detail Views
Left side: Chassis Heights – Model K270/K370

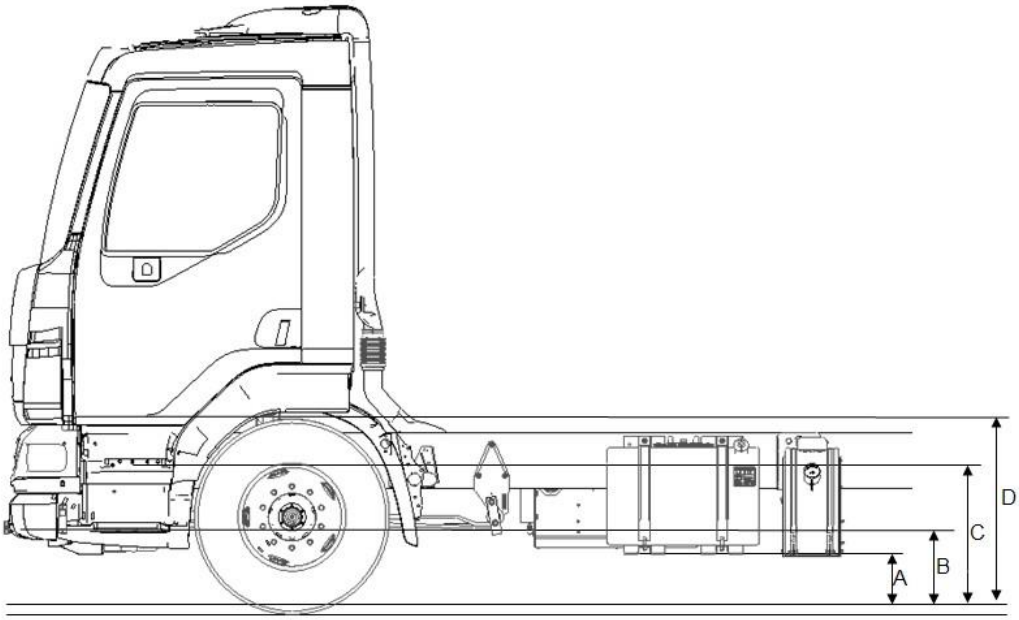

Figure 3-4.1 Cab Floor: Side View, Left Side w/ 19.5 Tires

Table 3-7.1. Battery Box Step and Cab Floor Measurements w/ 19.5 Tires

Position	Model K270 19.5 Tires			
	Unladen		Laden	
	In	mm	In	mm
A FUEL SUPPORT STEP	10.5	269	7.5	191
B FIRST STEP	16.6	421	13.2	336
C SECOND STEP	27.2	690	23.8	605
D CAB FLOOR	38.6	977	35.2	894

https://truckmanualshub.com/

Detail Views
Left side: Chassis Heights – ModelK270/K370

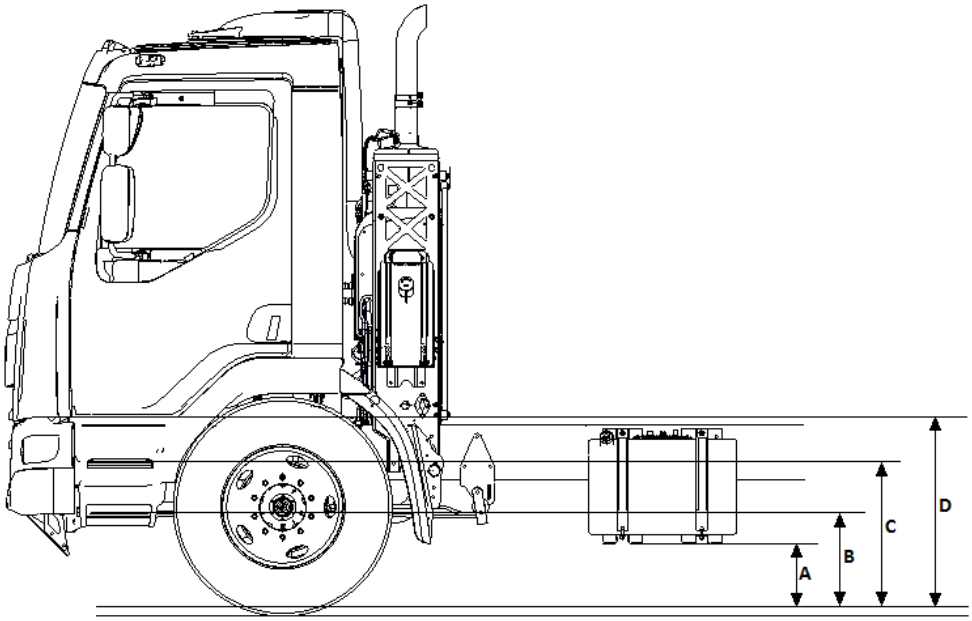

Figure 3-4.2 Cab Floor: Side View, Left Side w/ 22.5 Tires

Table 3-7.2. Battery Box Step and Cab Floor Measurements w/ 22.5 Tires

Position	Model K270/K370 22.5			
	*Unladen		Laden	
	In	mm	In	mm
A FUEL SUPPORT	15.8	401	14.3	363
B FIRST STEP	18.4	467	16.9	430
C SECOND STEP	32.7	830	31.2	794
D CAB FLOOR	41.4	1051	39.9	1013

Table 3-8 Floor to Top of Frame Measurements

Frame Heights	LOADED inches (mm)		*UNLOADED inches (mm)	
	Front Axle	Rear Axle	Front Axle	Rear Axle
Model K270 W/19.5 (15.6 SLR)	31 (787)	32.5(825)	36 .1(916)	35.6 (905)
Model K270/K370 W/ 11R-22.5 (19.4 SLR)	34.8 (884)	36.3 (922)	39.1(992)	38.6(980)

* Unloaded Dimensions are estimated.

https://truckmanualshub.com/

Detail Views

Components Locations –Model K270/K370

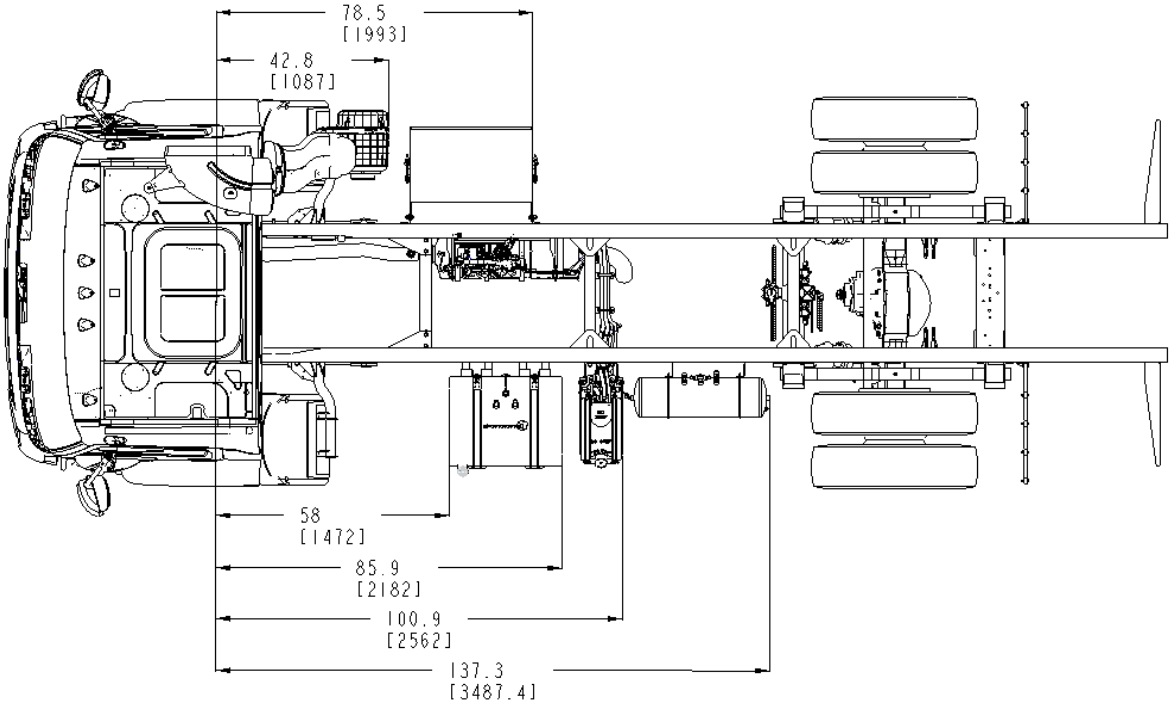

Figure 3-5.1 Model K270/K370 W/22.5 Tires, Battery Box, Fuel Tank, Air Tank and DEF Tank Location Measured From Front Axle: inches (mm).

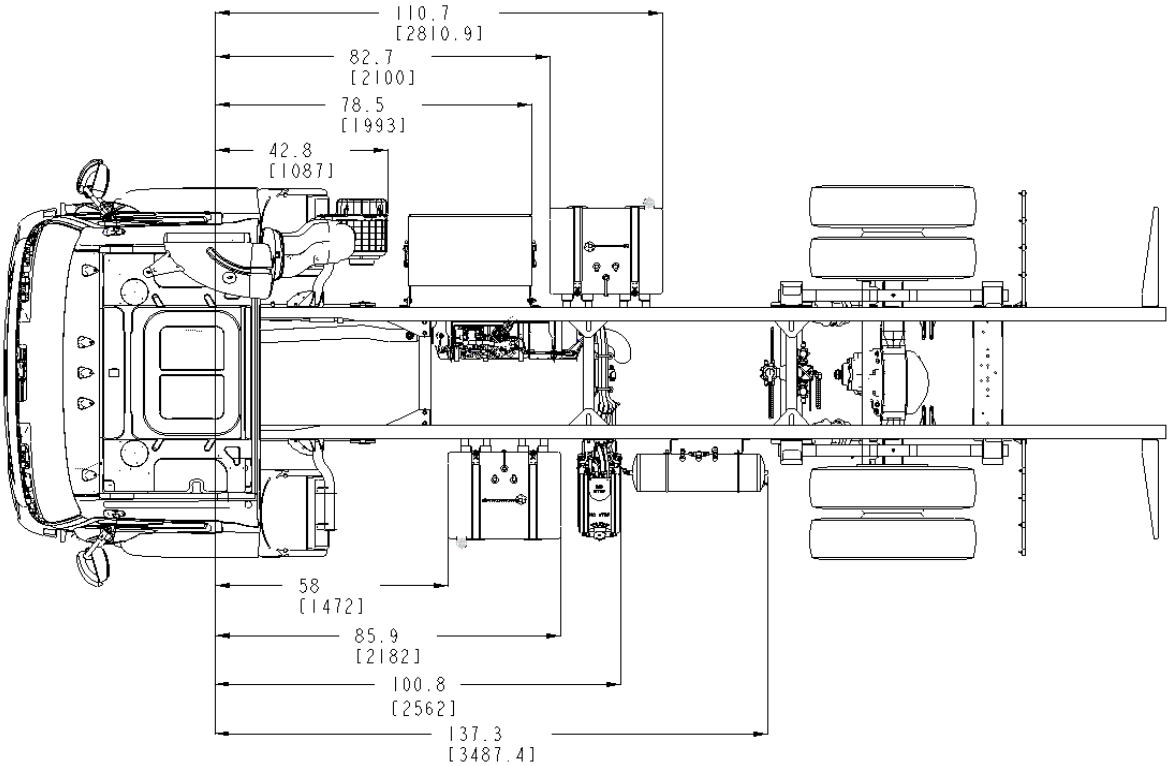

Figure 3-5.2 Model K270/K370 22.5 Tires, Battery Box, Dual Fuel Tanks, Air Tank and DEF Tank Location Measured from Front Axle: inches (mm).

https://truckmanualshub.com/

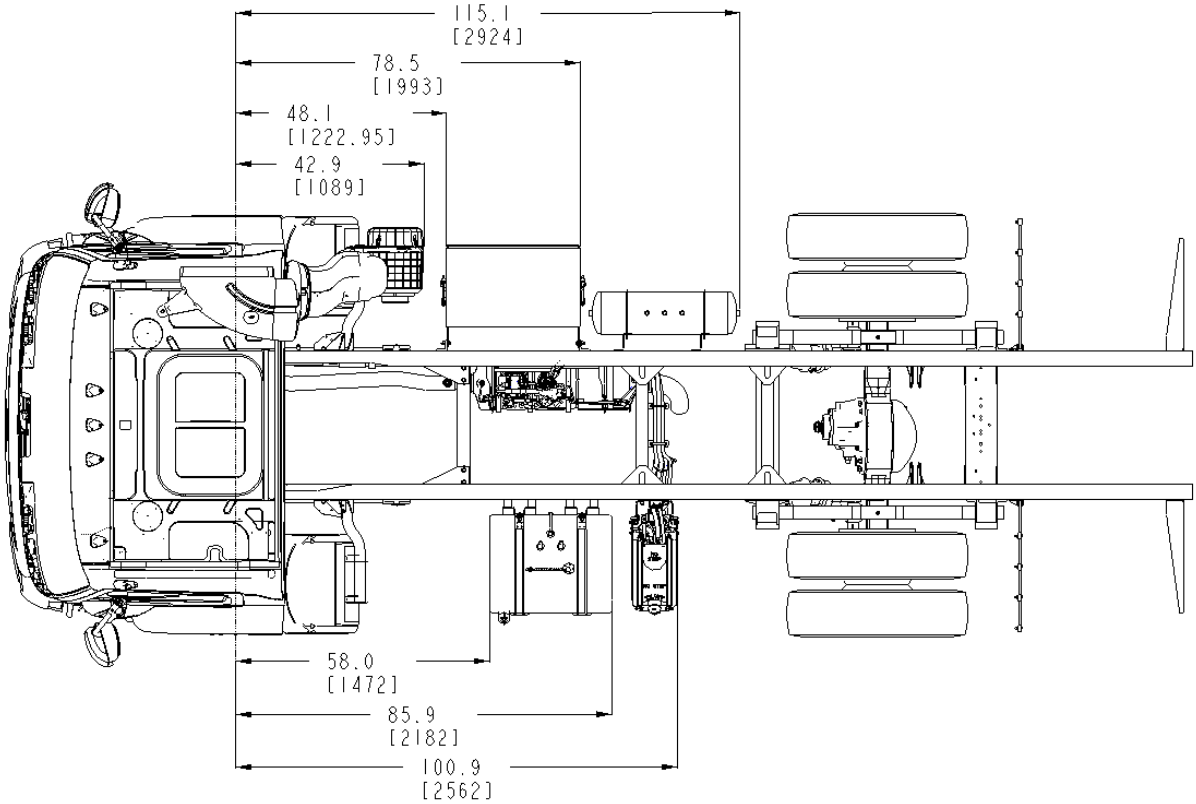

Figure 3-5.3 Model K270/K370 22.5 Tires, Short Wheelbase, Air Tanks on the RH Side, Battery Box and DEF Tank Location Measured from Front Axle: inches (mm).

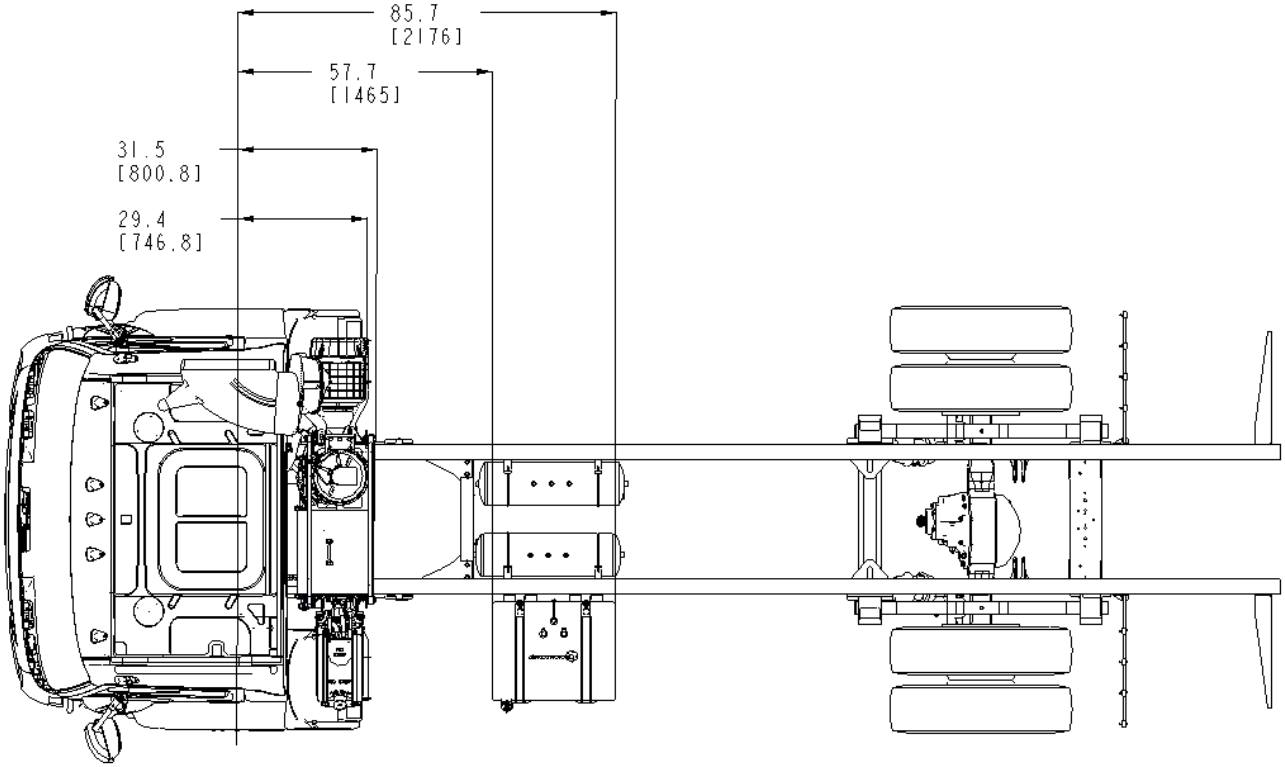

Figure 3-5.4 Model K270/K370 22.5 Tires, Clear Rail Package, Air Tanks, Battery Box and DEF Tank Location Measured from Front Axle: inches (mm).

https://truckmanualshub.com/

Detail Views
Crossmember Locations –Model K270/K370

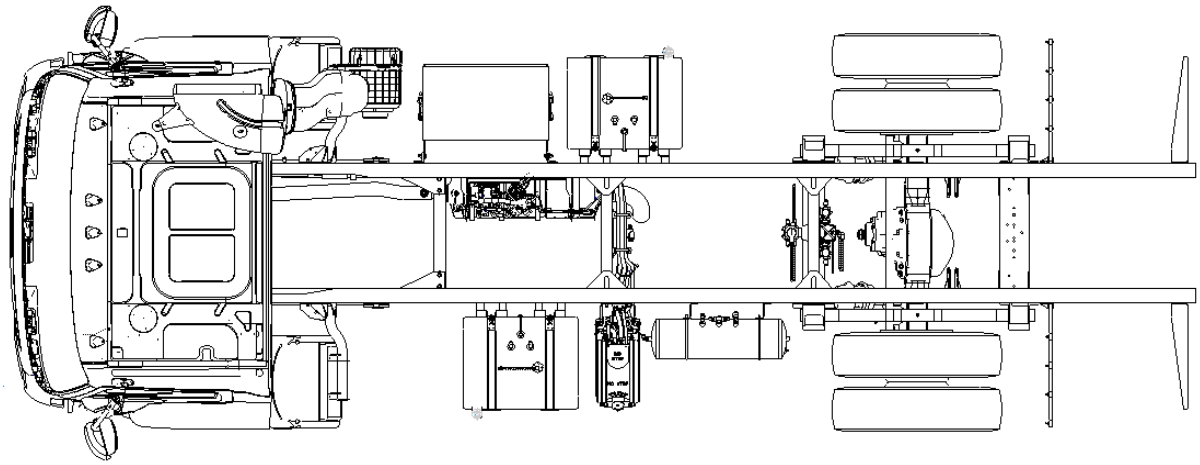

Figure 3-6.1 Model K270/K370 Crossmember Locations

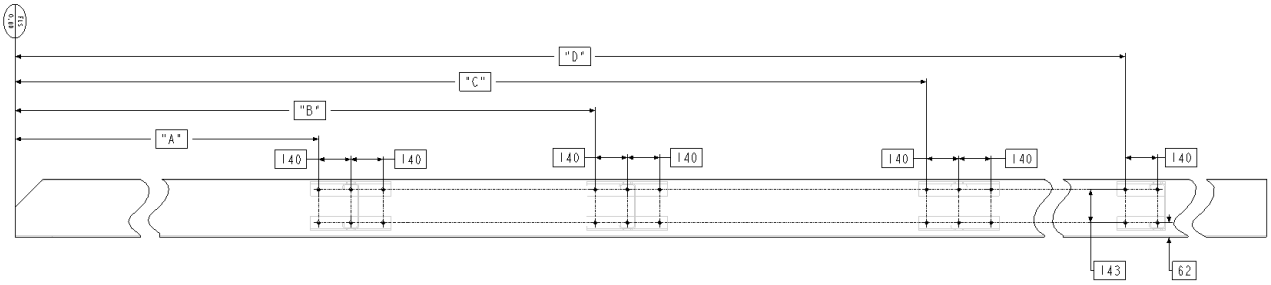

Figure 3-6.2 Model K270/K370 Crossmember Location Measured From Front Axle Centerline inches (mm)

Composition of use	WB inches (mm)	First Midship C/M DIM "A"	Second Midship C/M DIM "B"	Second Fill in C/M DIM "C"	Third Midship C/M DIM "D"
CLASS 6 CLASS7 WO CLEAR RAIL PACKAGE	146 (3708.4)	3463.4	NA	NA	NA
	158 (4013.2)	3463.4	NA	NA	NA
	164(4165.6)	3463.4	NA	NA	NA
	168(4267.2)	3463.4	NA	NA	NA
	170 (4318)	3463.4	NA	NA	NA
	178(4521.2)	3463.4	NA	NA	NA
	182 (4622.8)	3463.4	4257	7180.4	NA
	194 (4927.6)	3463.4	4257	7518	NA
	206 (5232.4)	3463.4	4257	7975.2	NA
	218 (5537.2)	3463.4	4663	8432.4	NA
	230 (5842)	3463.4	4975	8781	NA
	242 (6146.8)	3463.4	5075	9085.8	NA
	274(6959.6)	3463.4	4975	9898.6	6100

Table 3-9.1 Model K270/K370 Crossmember Location Measured from Front Axle Centerline inches (mm)

https://truckmanualshub.com/

Composition of use	WB inches (mm)	First Midship C/M DIM "A"	Second Midship C/M DIM "B"	Second Fill in C/M DIM "C"	Third Midship C/M DIM "D"
CLASS 6 CLASS7 CLEAR RAIL PACKAGE	121 (3073.4)	NA	NA	NA	NA
	142 (3606.8)	3043.3	NA	NA	NA
	146 (3708.4)	3043.3	NA	NA	NA
	156 (3962.4)	3183.3	NA	NA	NA
	158 (4013.2)	3183.3	NA	NA	NA
	164(4165.6)	3183.3	NA	NA	NA
	168(4267.2)	3183.3	NA	NA	NA
	170 (4318)	3323.3	NA	NA	NA
	178(4521.2)	3043.3	4257	NA	NA
	182 (4622.8)	3043.3	4257	7180.4	NA
	194 (4927.6)	3183.3	4397	7518	NA
	206 (5232.4)	3183.3	4397	7975.2	NA
	218 (5537.2)	3183.3	4663	8432.4	NA
	230 (5842)	3463.3	4975	8781	NA
	242 (6146.8)	3463.3	5075	9085.8	NA
	274(6959.6)	3463.3	4975	9898.6	6100

Table 3-9.2 Model K270/K370 Crossmember Location Measured From Front Axle Centerline for Clear Rail Package inches (mm)

https://truckmanualshub.com/

Frame Rail Configurations

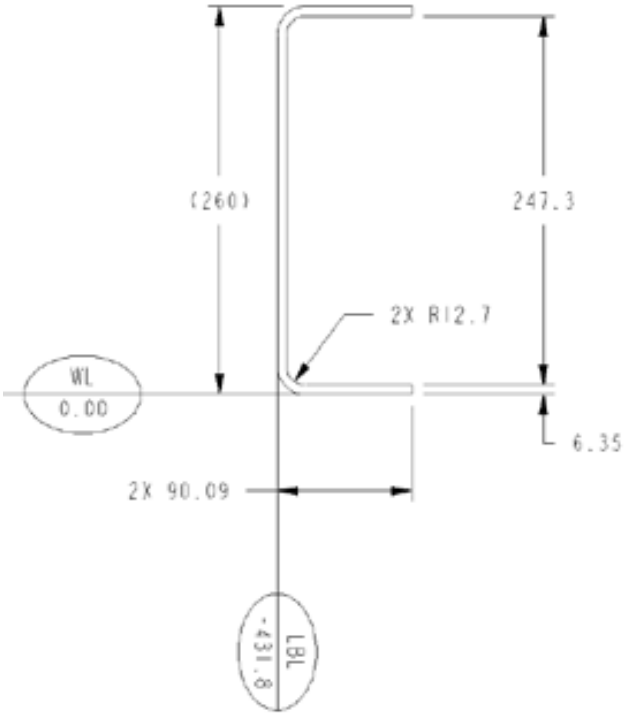

Model K270/K370
10-1/4 STEEL RAIL

Figure 3-7 Model K270/K370 Rail Measurements

Table 3-10 Frame Rail Strength Characteristics

RAIL STRENGTH	10.25" Rail (Per Rail)
Yield Strength, PSI	120,000
Section Modulus, in^3	11.65
RBM, Lbs-Inch	1,398,664

https://truckmanualshub.com/

Battery Box, Fuel Tanks and Air Tanks — Model K270/K370

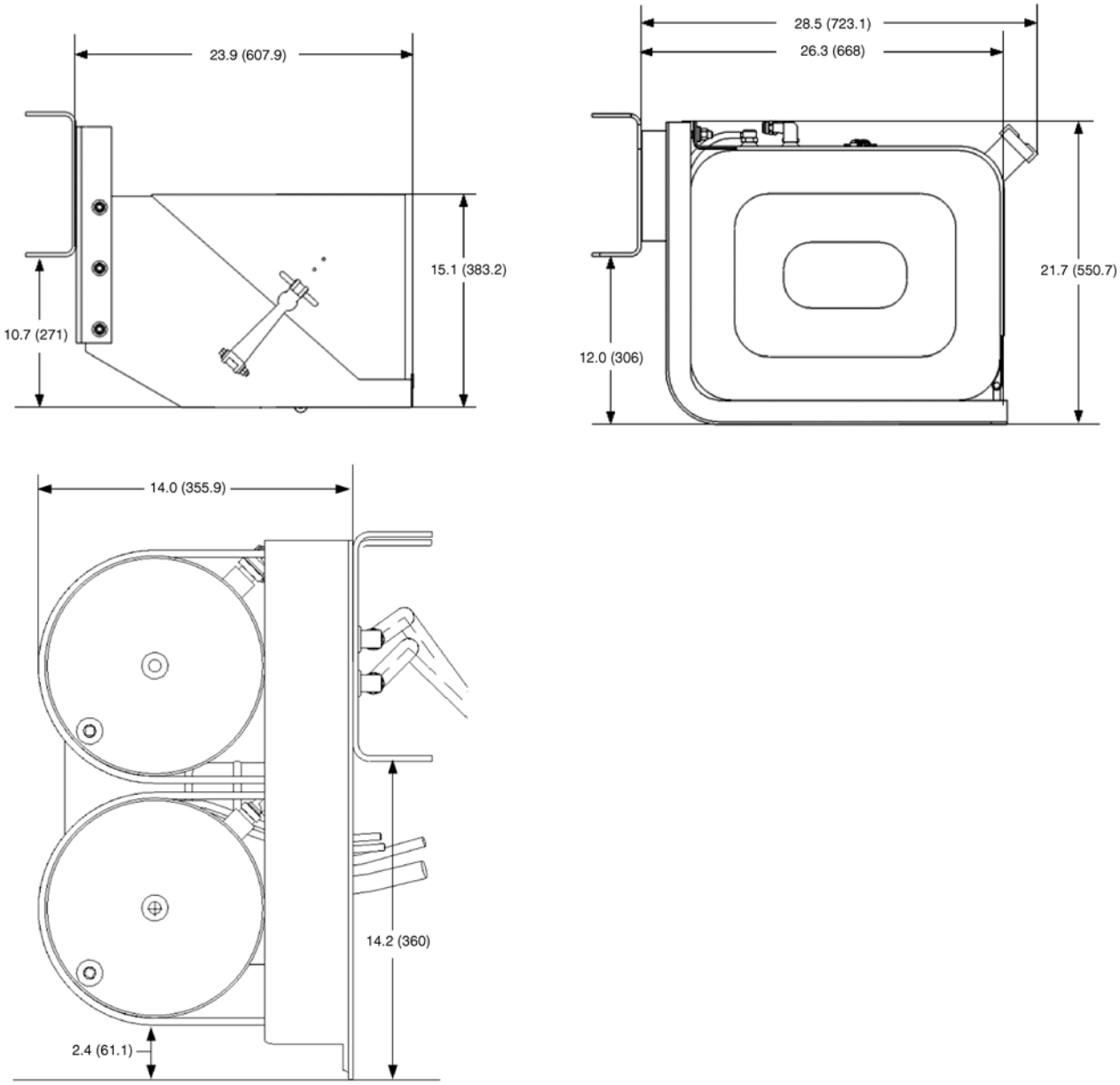

Figure 3-8 Model K270/K370 Battery Box, Fuel Tank and Air Tanks Measurement mm (in)

https://truckmanualshub.com/

Detail Views
Exhaust Canister Locations – Model K270/K370

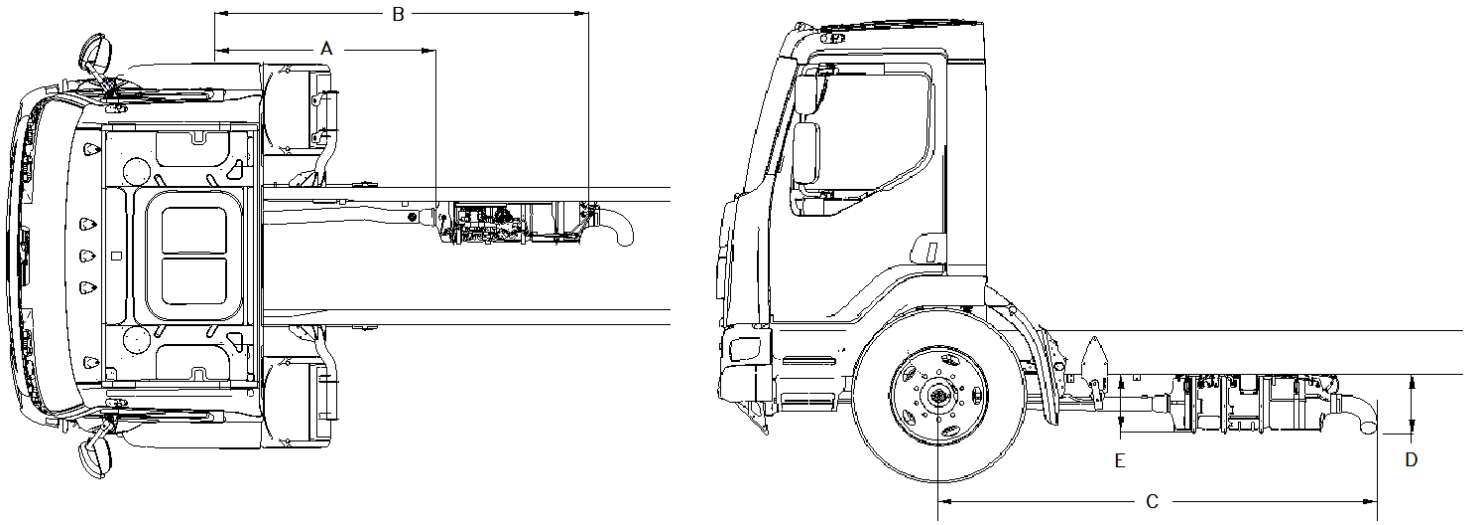

Figure 3-9.1 Model K270/K370 Exhaust Measurements

Table 3-11 Model K270/K370 Exhaust Location Measured From FAX in inches (mm)

Model	A	B	C	D	E
Model K270/K370	54.3 (1378.3)	92.3 (2343.6)	101.3 (2572.2)	14.2 (360.7)	13.2 (360.7)

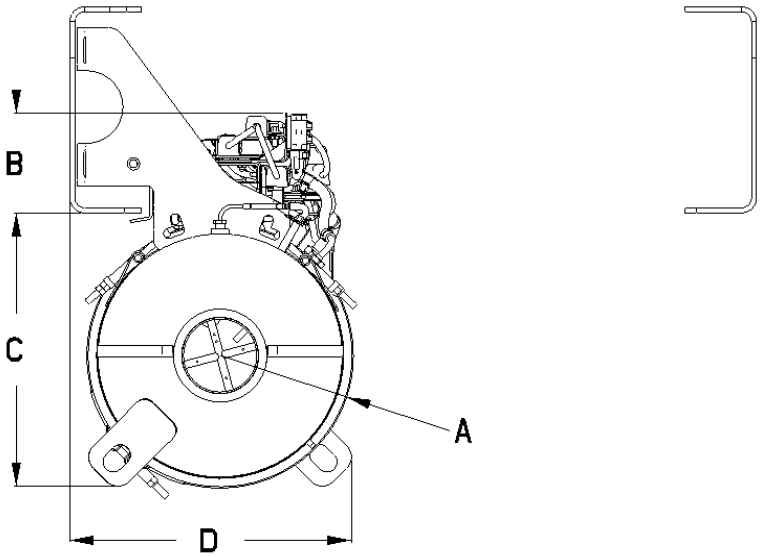

Figure 3-9.2 Model K270/K370 Exhaust Measurements

Table 3-12 Model K270/K370 Exhaust Location Measured From Outboard and Bottom of Rail - Inches (mm)

Model	A	B	C	D
Model K270/K370	6.6 (167)	4.9 (125.3)	13.6 (345)	13.9 (353.5)

https://truckmanualshub.com/

Side View – Model K270/K370 clear rail package

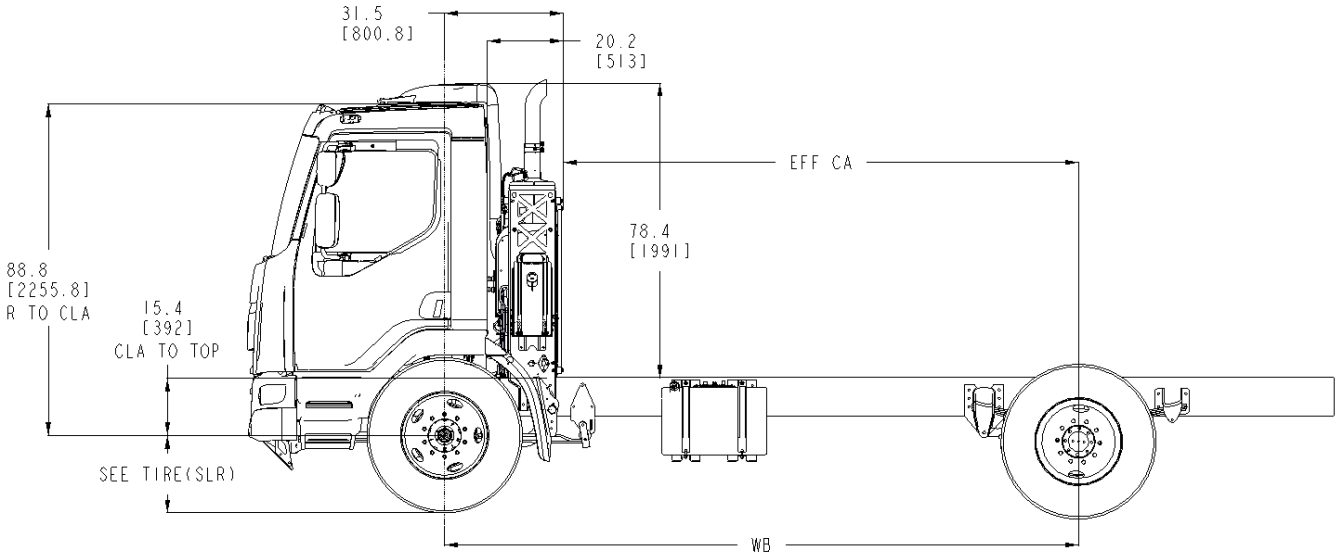

Figure 3-10.1 Side View —Model K270/K370 CRP Laden Height and Length Measurement

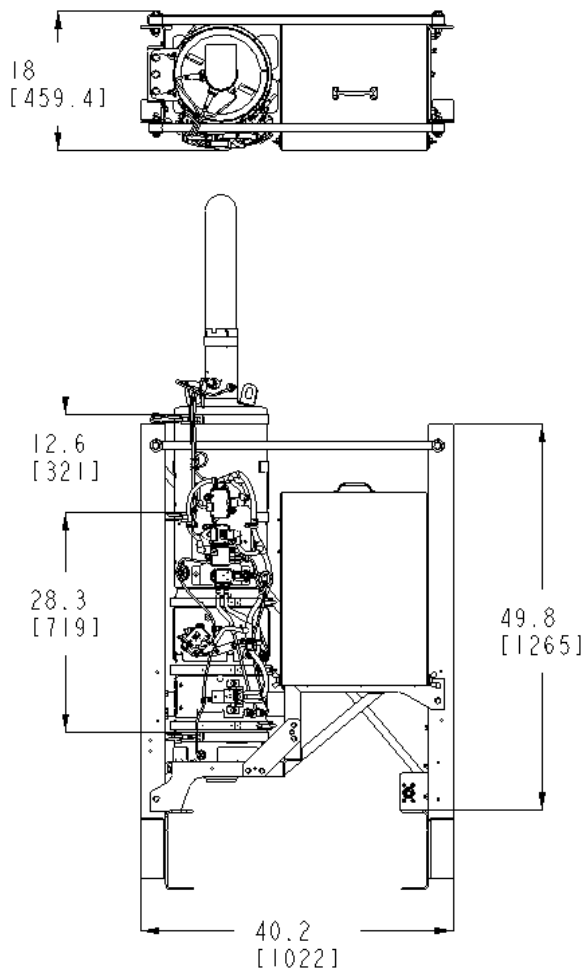

Figure 3-10.2 Model K270/K370 Vertical Exhaust Measurement inches (mm)

https://truckmanualshub.com/

Reyco 79KB Single Rear Axle

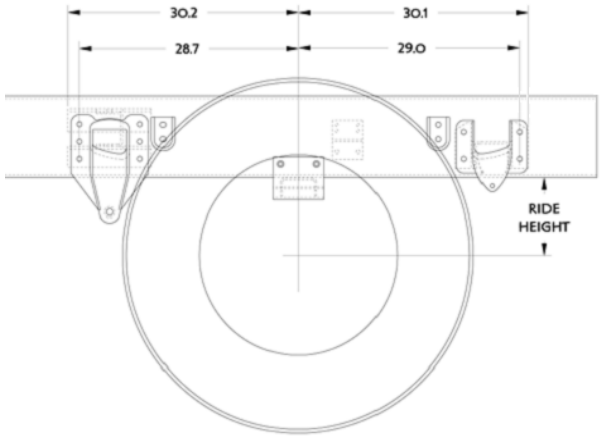

Hendrickson HAS Single Rear Axle

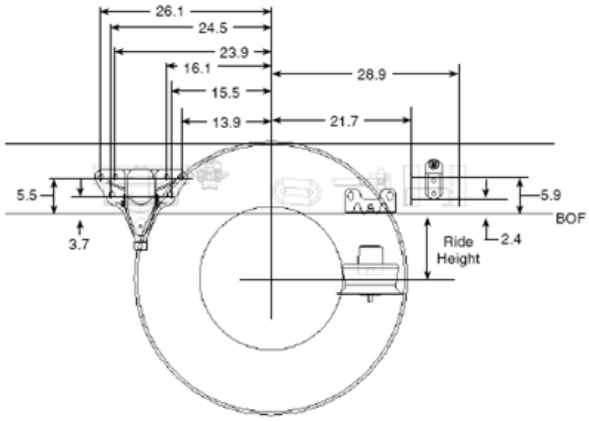

Figure 3-11 Model K270/K370 Reyco & Hendrickson Single Rear Axle Measurements

Suspension	Rating	Laden Ride Height	Unladen Ride Height
Reyco 79KB Single	21K	7.5"	9.0"
Hendrickson HAS 210L/230L	23K	8.3"	8.5"

Table 3-13 Model K270/K370 Reyco & Hendrickson Single Rear Axle: Ride Height Measurements

TIRE DATA

For dimensions of your particular tire, visit the manufacturer website.

FRAME AND CAB RELATED HEIGHTS

The bottom of the frame rail (BOF) at the front and rear axle can be used as a reference point to estimate vertical heights. Use the following to calculate estimates for frame and cab related heights, such as top of frame rail, step height, top of exhaust pipe, etc.:

1.) Tire radius data from the manufacturer
2.) Front and rear suspension ride heights in this section 3.)
Frame rail heights defined in this section if needed
4.) Component dimensions from bottom of rail defined in this section if needed

Note that there are many factors that will affect heights including, but not limited to, front and rear axle loading and tire pressure. Placement of frame components such as fuel tanks will affect loads on the front axle and rear axle, as well as distribution to the left and right sides of the vehicle. Heights calculated from this information are estimates only.

GROUND CLEARANCES

To calculate estimates for ground clearance for mounted components using the underside of the bottom of the frame rail as a reference use the following:

1.) Tire radius data from the manufacturer
2.) Front and rear suspension ride heights in this section
3.) Component dimensions from bottom of rail defined in this section

Ground clearances, like height calculations, are affected by factors including, but not limited to, front and rear axle loading and tire pressure. Placement of frame components, such as fuel tanks, will affect loads on the front axle and rear axle, as well as distribution to the left and right side of the vehicle. Ground clearances calculated from this information are estimates only.

https://truckmanualshub.com/

PTO Clearances

The following visuals are provided to help or aid in determining PTO locations and clearances. For specific dimensions please work through your local Kenworth dealer. Multiple PTO's are shown for layout purposes only. Power equipment, i.e., drive shafts & power pumps are not included. Body builders should select the appropriate Chelsea or Muncie 24V electric over air PTO's for their application and customer requirements.

NOTE: All installations are only RH side PTO locations shown below are for reference only.

In order to ensure the PTO area remains clear of air equipment, electrical and emissions equipment, Kenworth recommends always ordering PTO controls, even when installing the PTO aftermarket. Contact your local dealer for assistance.

Below are shown example of PTO models installed on a 2000 Series Allison transmission:

Automatic Transmission – Allison 2000:

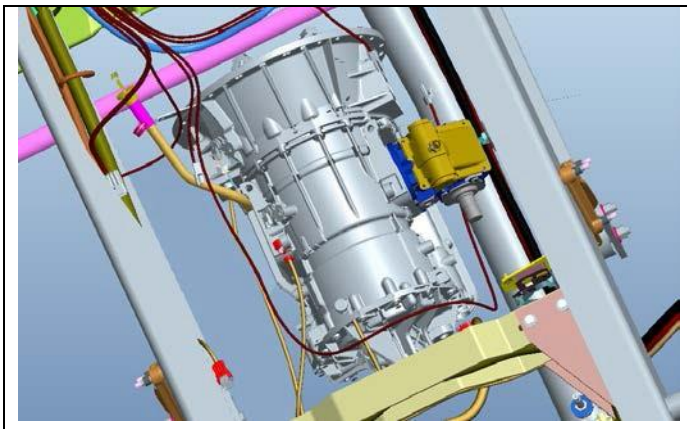

Muncie PTO TG6S-A1BX

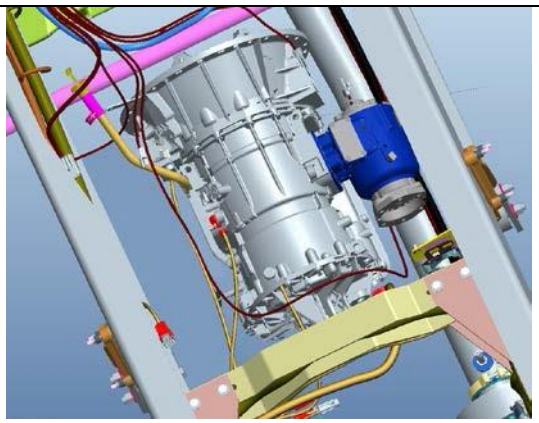

Muncie PTO CS6-H3KP

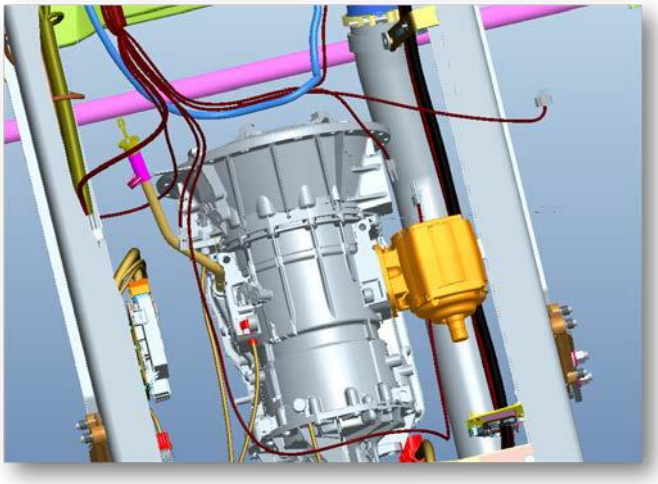

Chelsea PTO Model 230-270

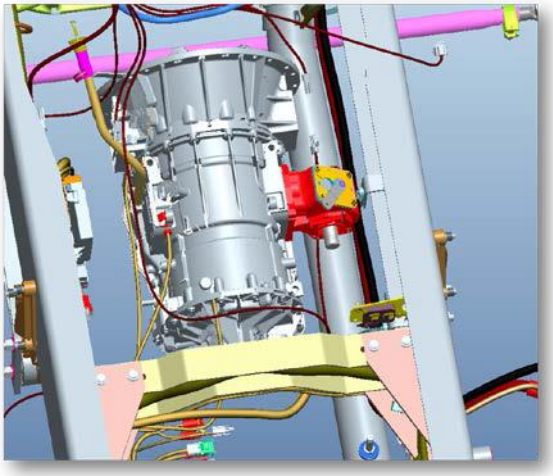

Chelsea PTO Model 442

Figure 3-12.1 PTO models installed on a 2000 Series Allison transmission

https://truckmanualshub.com/

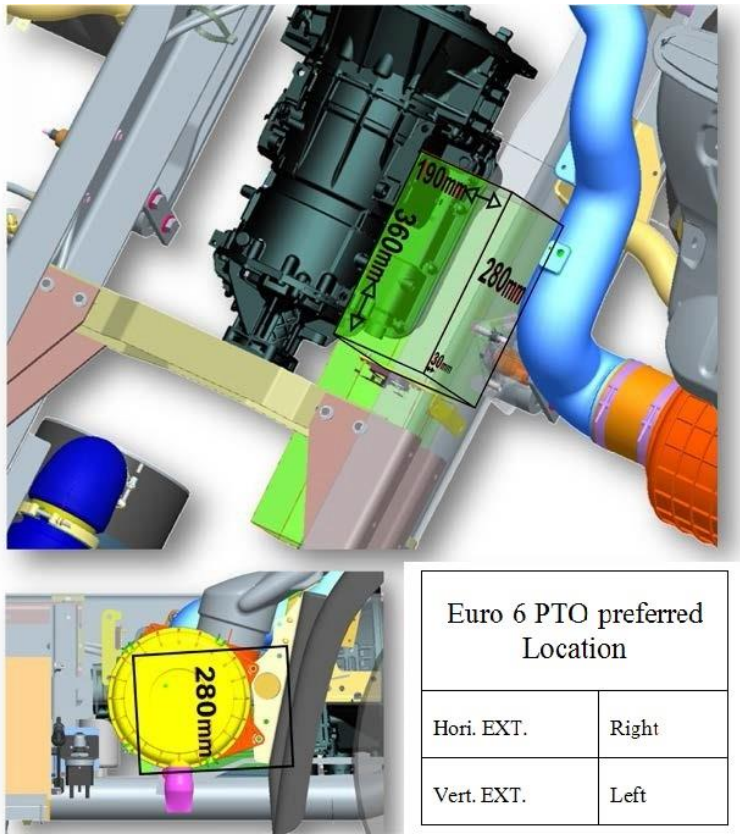

Euro 6 PTO preferred Location	
Hori. EXT.	Right
Vert. EXT.	Left

Figure 3-12.2 Model K270/K370 PTO Clearances 1 of 2

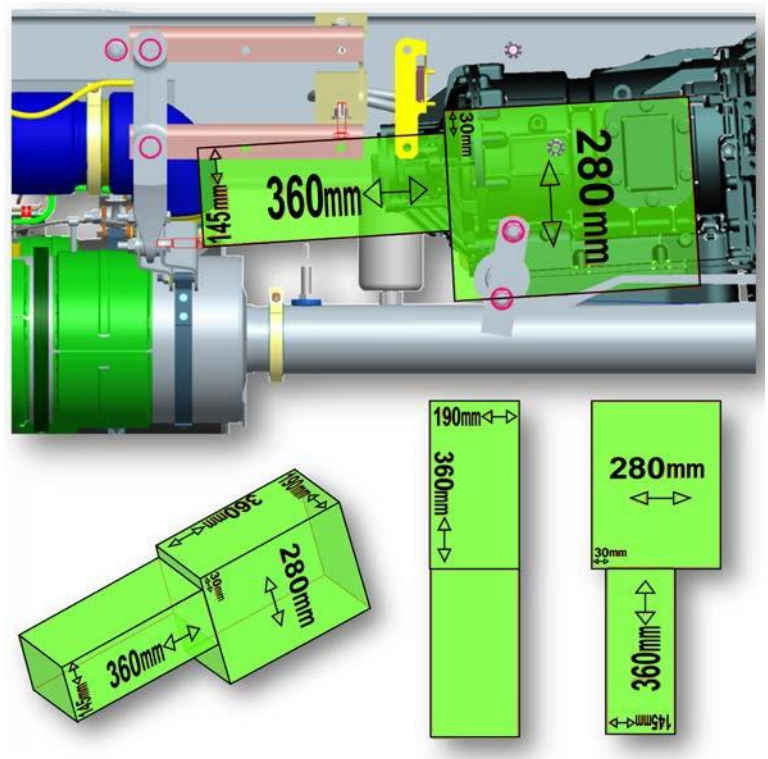

Figure 3-12.3 Model K270/K370 PTO Clearances 2 of 2

https://truckmanualshub.com/

EXHAUST AND AFTERTREATMENT INFORMATION

The following section is designed to give you information regarding the exhaust and after-treatment systems on Kenworth chassis. All Kenworth's equipped with current emission level engines will utilize Selective Catalyst Reduction (SCR). SCR is a process in which Diesel Exhaust Fluid (DEF) is injected into the exhaust downstream of the engine. DEF is converted to ammonia by the heat of the exhaust system. Inside of the SCR canister, a catalyst causes a chemical reaction between the ammonia and NOx, turning it into water and nitrogen. For more information on the specific details of how SCR works, please contact your local Kenworth dealer.

On most Kenworth chassis, the DEF Supply Module (or pump) is integrated into the DEF tank. Kenworth does not allow relocation of this pump. The following schematic details how the DEF lines route to the after-treatment system.

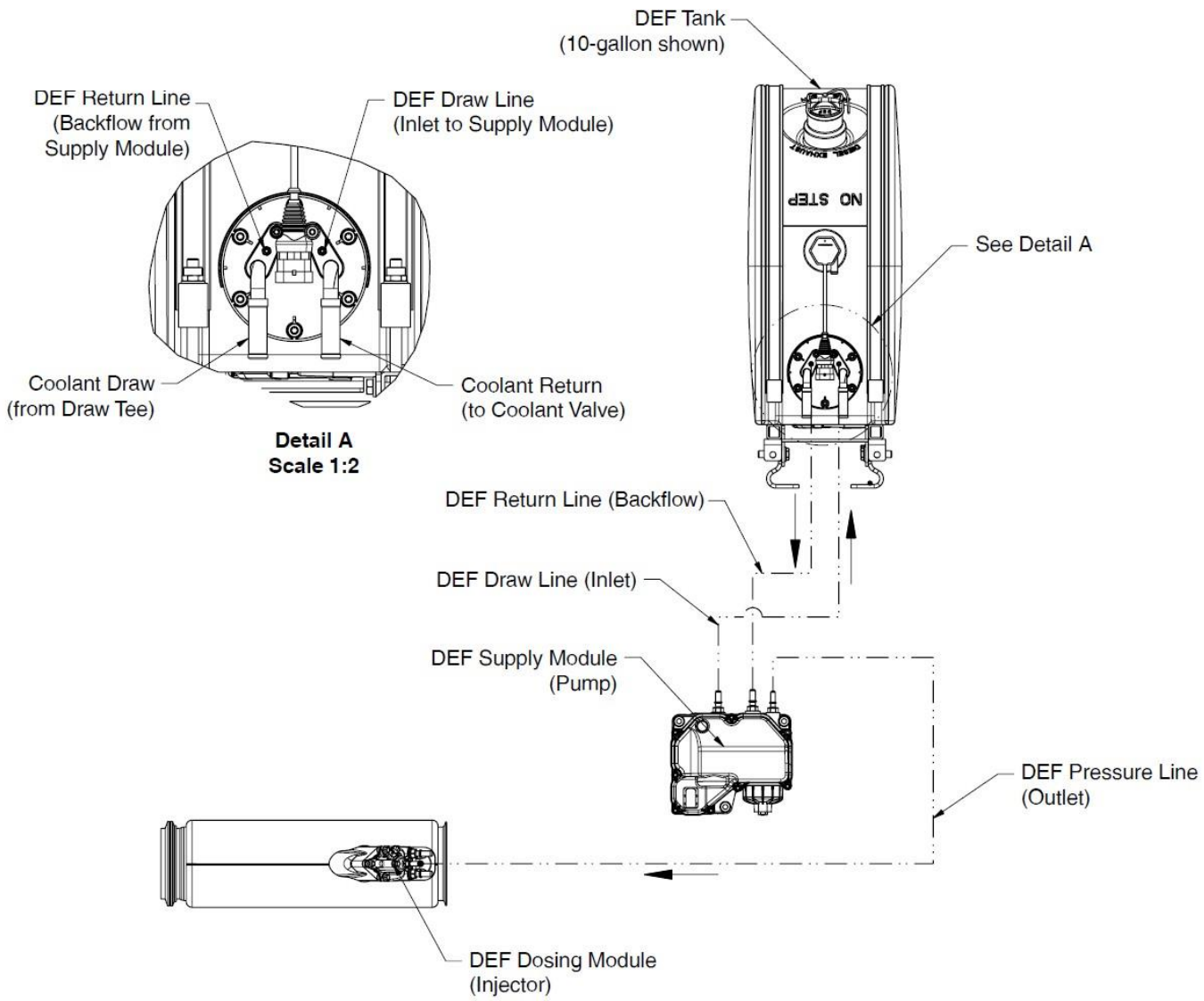

Figure 4-1.1 The DEF lines route to the after-treatment system

https://truckmanualshub.com/

DEF will freeze at approximately 11° F (-12° C). In order to keep DEF from freezing, all tanks will be heated with engine coolant. The following schematic shows the routing of these lines. The coolant lines that run to and from the SCR system must not be tampered with, or used for a source of heat and/or cooling for other components on the chassis. It is critical that the system is not compromised in any manner.

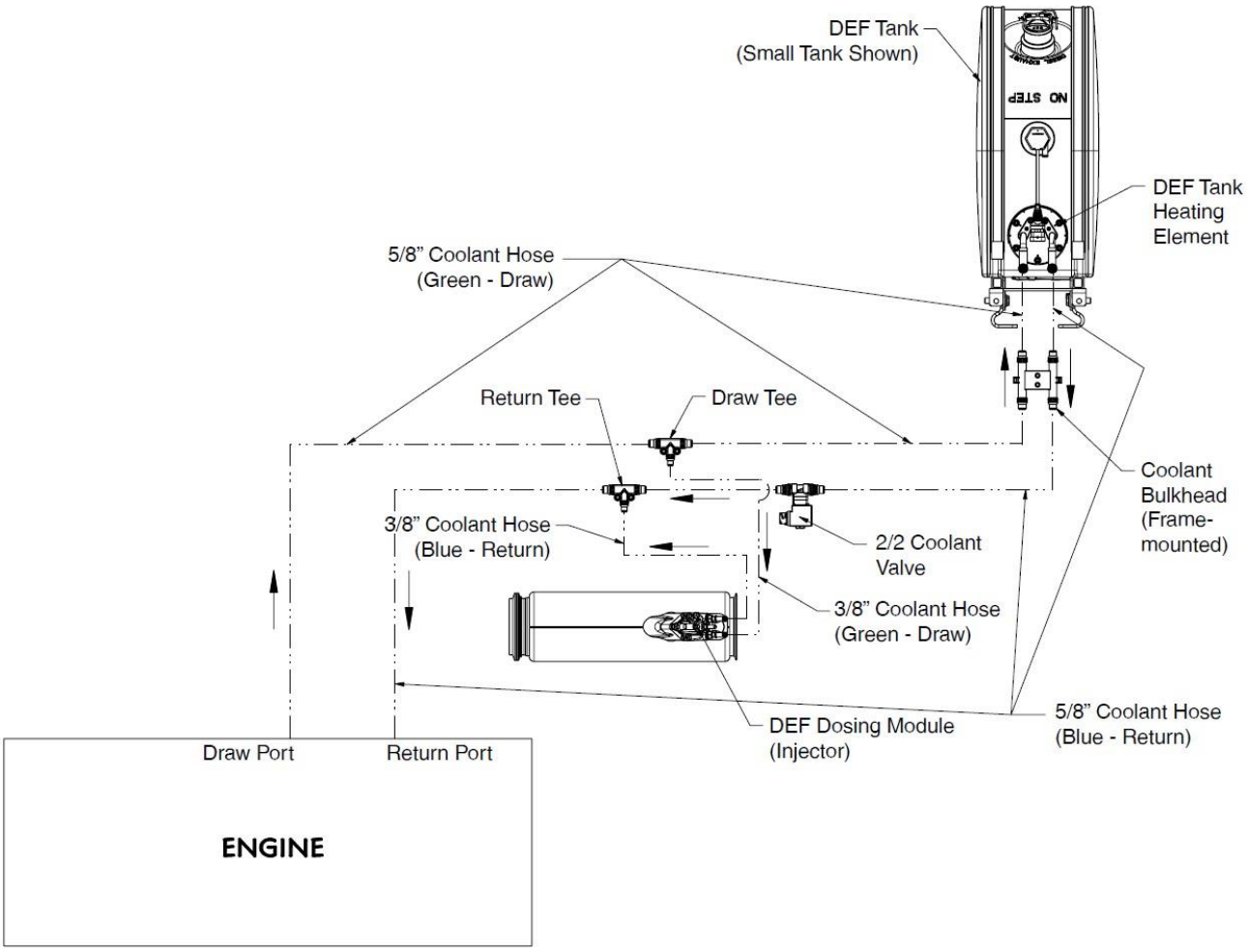

Figure 4-1.2 The DEF lines route to the Engine Coolant

https://truckmanualshub.com/

General Guidelines for DEF System

The installation of the DEF tank is a critical component of the SCR system. While Kenworth does not recommend relocating the DEF tank, there are applications and body installations that will require it. The guidelines below must be strictly followed by any entity relocating the tank. Failure to follow the guidelines completely and accurately may result in engine shut down situations. Kenworth offers a variety of DEF tank sizes to meet every application.
The DEF tank volume is regulated by the E.P.A.
Kenworth advises against modifying the tank volume after the truck has been delivered from the factory.

- Total DEF capacity **must** meet or exceed 6% of the useable fuel capacity on the truck. The calculation to determine DEF capacity is:
  Minimum DEF Tank Volume = Useable Fuel Capacity (gal) x 0.06.
  Example: For a truck with 45 useable gallons of fuel, the equation is:
  DEF required = 45 x 0.06 = 2.7 gallons or more of DEF.

PACCAR-approved DEF hoses are required when retrofitting for system to function properly. The use of unapproved hoses for DEF lines will void warranty and may cause engine shut down situations. The DEF pump (or Supply Module) cannot be relocated from the DEF tank. In addition, the Medium Duty Rectangular DEF Tank that is used to meet clear back of cab requirements cannot be relocated.

Installation Requirements and Dimensions for DEF System

When relocating any DEF system components, the locations must meet the guidelines below. Failure to comply may result in non-conformance to EPA standards and engine shutdown.

DEF piping relative heights: In order to ensure proper functionality of DEF system, the height differences in the guidelines below must be followed during line routing and component placement.

When relocating the components the maximum pressure DEF hose length from Supply module to Dosing Module is 3 meters (118”).

Maintain a minimum of 3” (76mm) clearance to shielded exhaust components when routing DEF lines to prevent possible melting. If the DEF tank is relocated the coolant lines will need to be modified. During this process, if the tank is moved forward on the chassis (ie closer to the engine), it is necessary to remove excess coolant lines and maintain the original routing path. If the tank is moved rearward on the chassis, the additional length of the cooling line required to complete the installation must be installed in a straight section of the existing coolant routing lines. This process will minimize the change in coolant flow by minimizing changes in restrictions. Increase in restriction occurs with excessive line length and bends. Work with your local Kenworth dealer if you are unsure about the coolant line modifications.

https://truckmanualshub.com/

Measurement Reference Points

For all relocation procedures, the measurement points referenced in the guidelines are taken from the following specific points:

Supply Module: The supply module is commonly called a pump. The measurement point on the supply module is the top of the DEF fluid pressure line. See Figure 4-2.

Figure 4-2 Measurement Location of DEF Supply Module (Pump)

Dosing Module: The dosing module is commonly called an injector; this injector is located towards the center of the Exhaust Canister. The measurement point on the dosing module is the top of the DEF fluid pressure line. See Figure 4-3.

Figure 4-3 Measurement Location of DEF Dosing Module (Injector)

The following relocation guidelines are dependent on exhaust configuration and DEF tank type and location.

The Dosing Module should not need to be relocated, however if it is removed for any reason, it is critical that the module is reinstalled at the correct orientation. Figure 4-4 below illustrates the correct installation orientations. The angle references the vertical plane.

https://truckmanualshub.com/

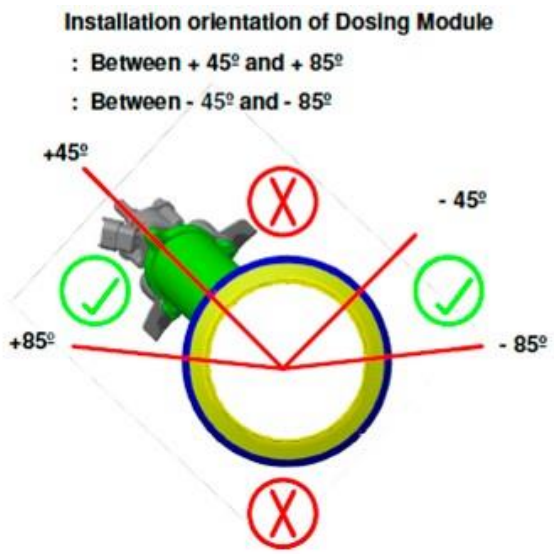

Figure 4-4 Orientation of Dosing Module

Routing to the Dosing Module (Injector)

It is important for the function of the dosing module to ensure that the dosing module is not routed downstream of DEF lines or components. If this is unavoidable (for example on RH under exhaust systems) or Horizontal (Series) Exhaust, a routing trap must be installed. A minimum of 12” of line length must be routed below the dosing module to catch any leftover DEF when system is purged.

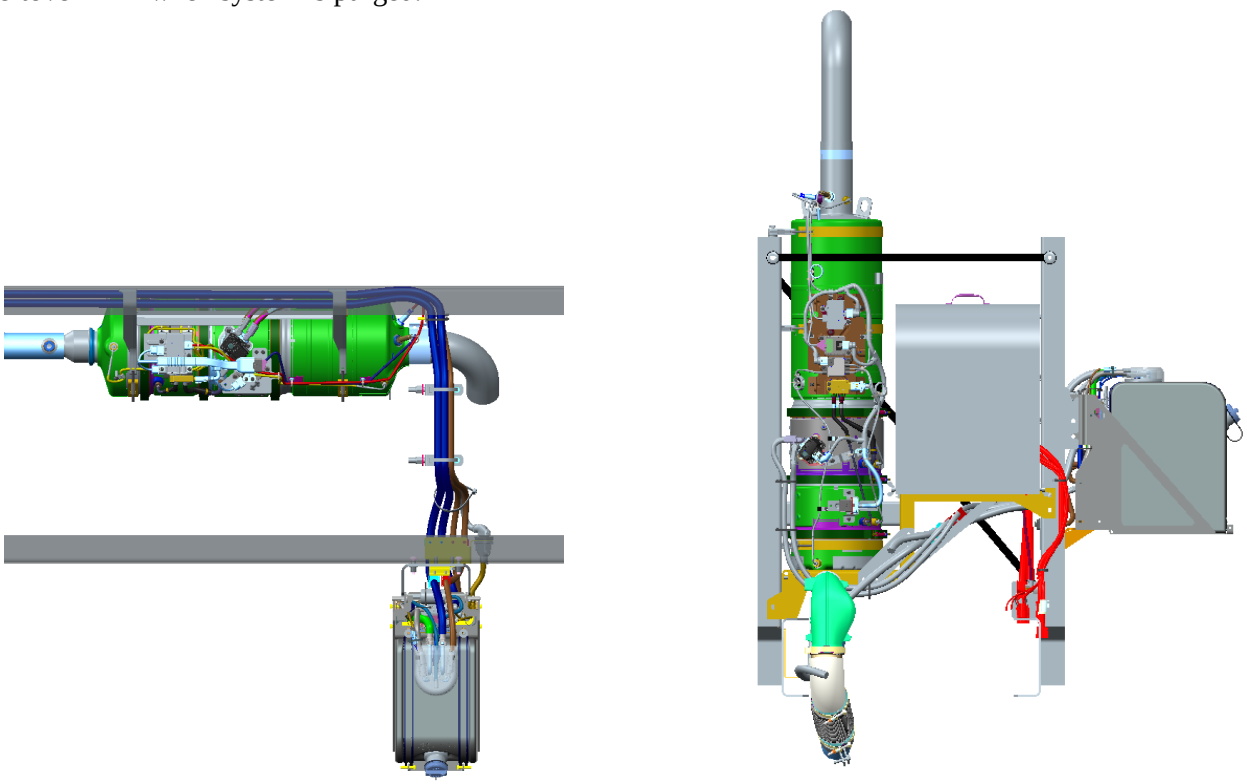

Horizontal Exhaust **Vertical Exhaust**

Figure 4-5 Routing DEF Lines and DEF Trap

https://truckmanualshub.com/

GENERAL EXHAUST INFORMATION

Kenworth will offer Horizontal and Vertical Exhaust Canister system on Model K270/K370 chassis in 2017.

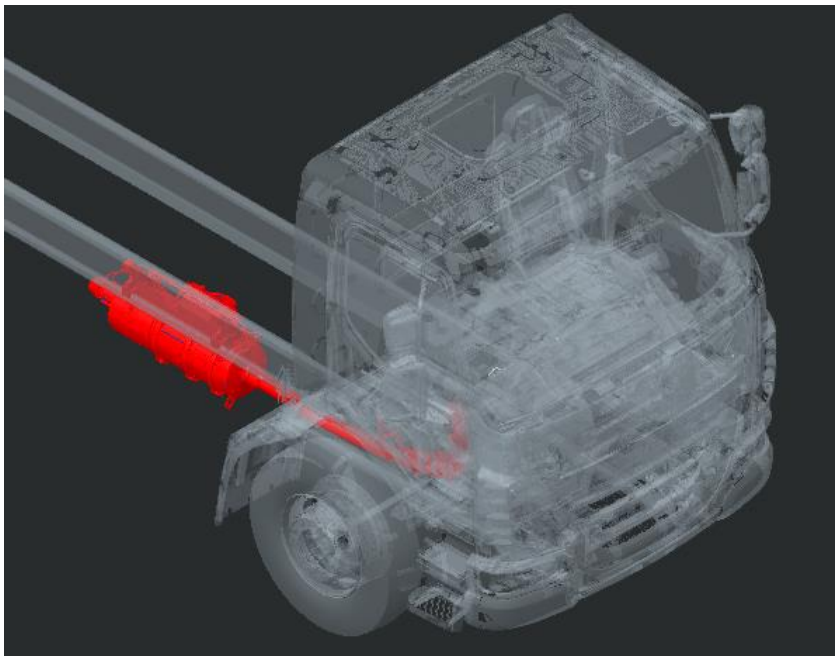

Figure 4-6.1 Horizontal Exhaust Canister with Horizontal Tailpipe

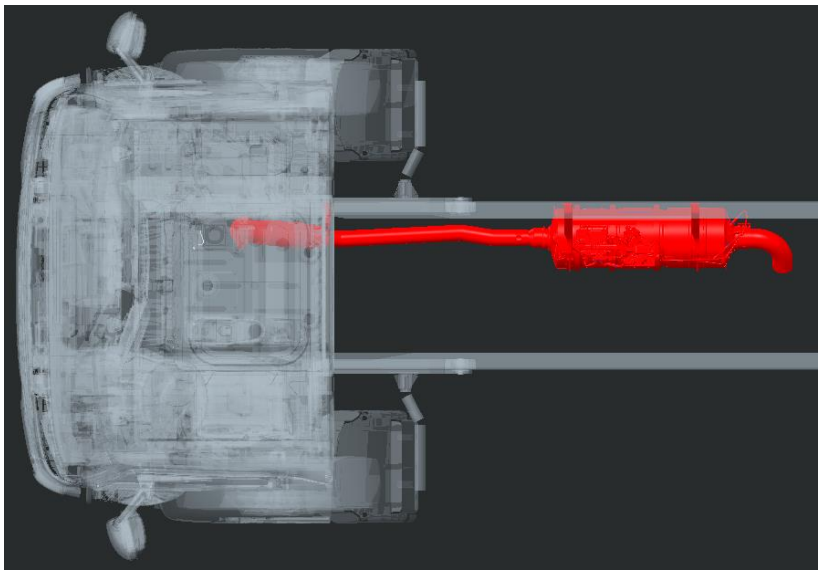

Figure 4-6.2 Top view of Horizontal Exhaust Canister with Horizontal Tailpipe

https://truckmanualshub.com/

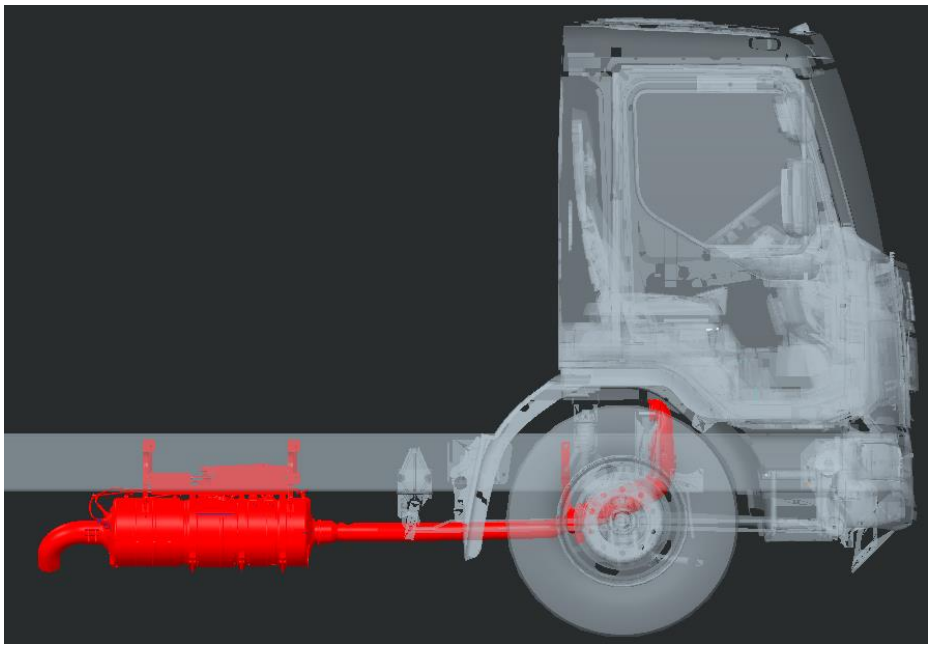

Figure 4-6.3 Right view of Horizontal Exhaust Canister with Horizontal Tailpipe

Figure 4-6.4 Back view of Horizontal Exhaust Canister with Horizontal Tailpipe

https://truckmanualshub.com/

GENERAL EXHAUST INFORMATION

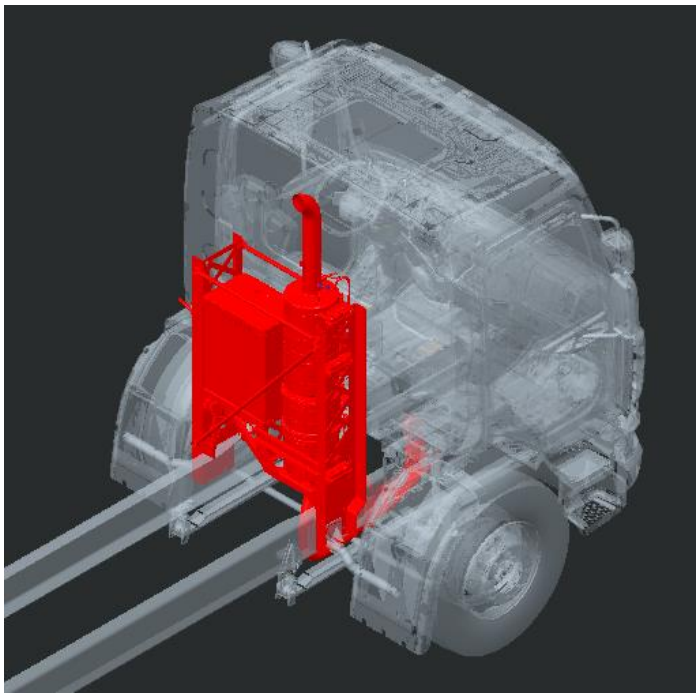

Figure 4-7.1 Vertical Exhaust Canister with Vertical Tailpipe

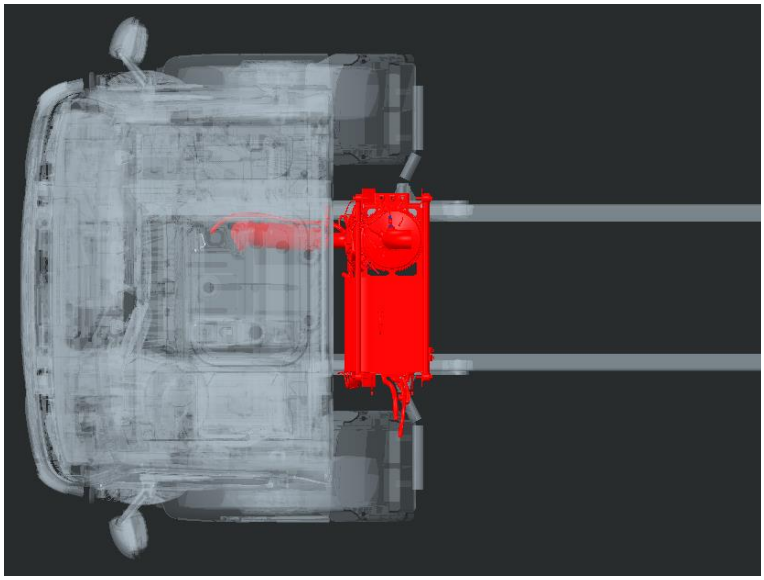

Figure 4-7.2 Top view of Vertical Exhaust Canister with Vertical Tailpipe

https://truckmanualshub.com/

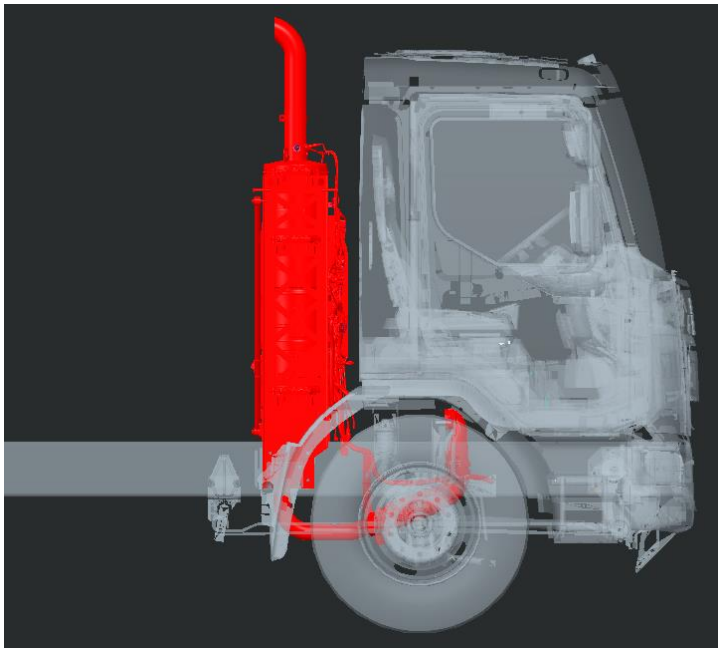

Figure 4-7.3 Right view of Vertical Exhaust Canister with Vertical Tailpipe

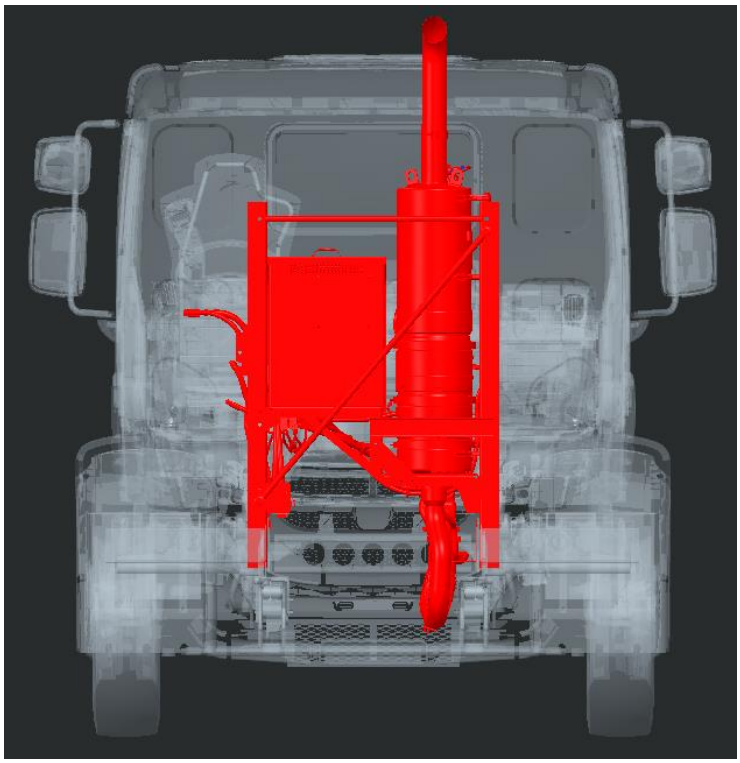

Figure 4-7.4 Back view of Vertical Exhaust Canister with Vertical Tailpipe

Section 5
Frame Layouts and Body Mounting

https://truckmanualshub.com/

FRAME LAYOUTS

The dimensions in the frame layout section are intended to aid in layout of the chassis, and to help determine the best possible combination of fuel tanks, battery boxes, Exhaust Canister, and Diesel Exhaust Fluid (DEF) tank. For your application, the layouts focus on the under cab area, with appropriate dimensional information in- cluded for pertinent back of cab components. Not all optional equipment is included in this section; additional components may be placed on the rail behind components shown. The Back of Cab components are shown primarily for reference. For more specific requirements, work with your local Kenworth Dealer. Please read the instructions carefully. The following dimensions are consistent across the entire section to aid in the comparison of one layout option versus another.

The visual index that follows will give you a quick overview of the layout that is included.

Visual Index

Table 5-1 Symbols

Symbol	Description
	Horizontal Exhaust Canister
	Vertical Exhaust Canister
	Battery Box
	Air Dryer
	DEF Tank
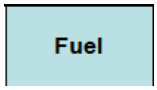	Fuel Tank

https://truckmanualshub.com/

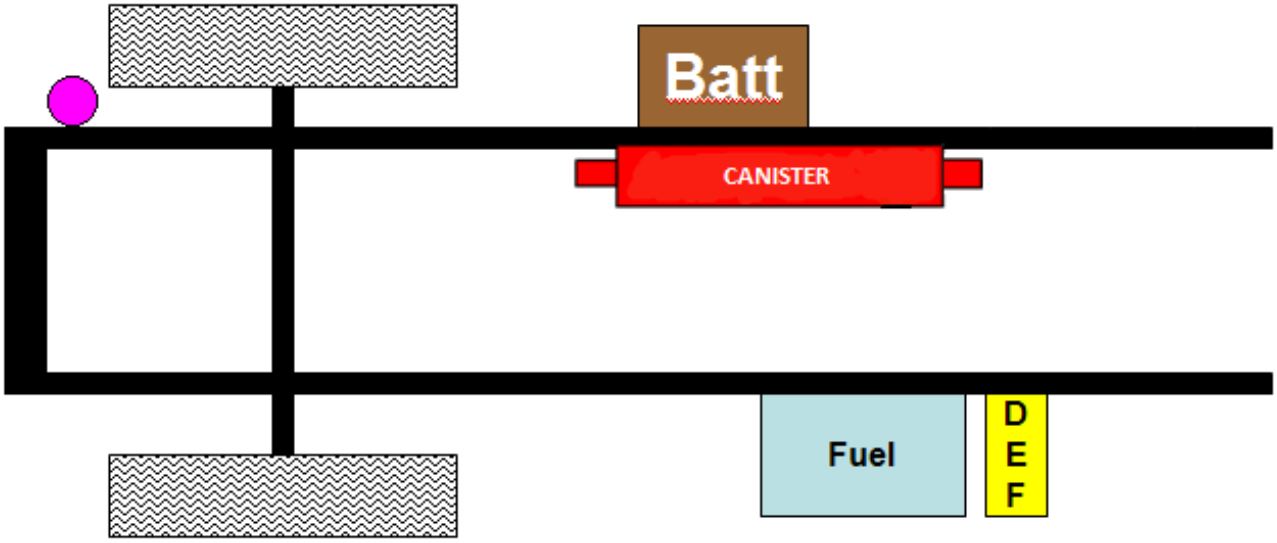

Figure 5-1.1 Horizontal Exhaust Canister, RH horizontal tailpipe, LH BOC rectangular fuel tank, LH BOC rectangular DEF tank, and RH BOC battery box

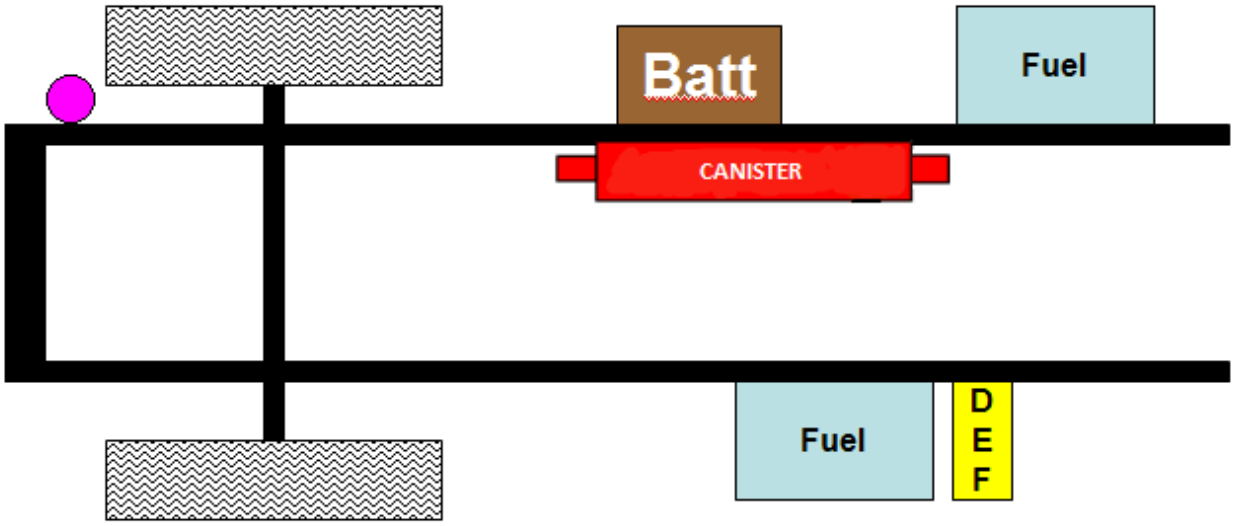

Figure 5-1.2 Horizontal Exhaust Canister, RH horizontal tailpipe, Dual BOC rectangular fuel tanks, LH BOC rectangular DEF tank, and RH BOC battery box

https://truckmanualshub.com/

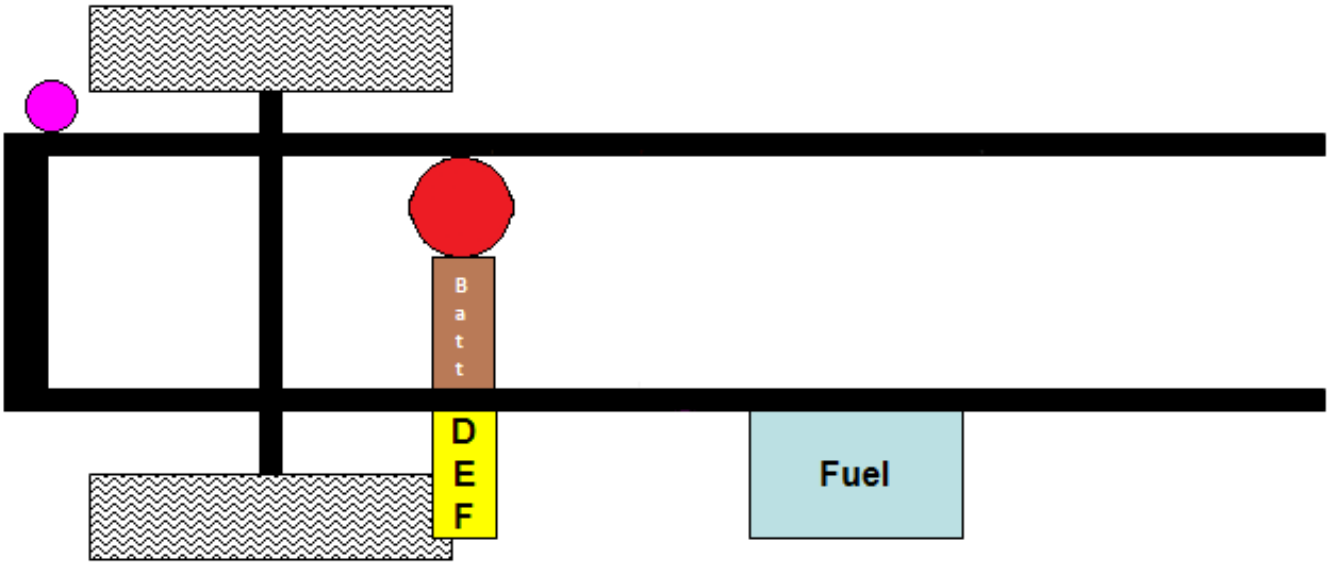

Figure 5-1.3 Vertical Exhaust Canister, BOC Vertical tailpipe, LH BOC rectangular fuel tank, LH BOC rectangular DEF tank and BOC battery box

https://truckmanualshub.com/

CRITICAL CLEARANCES
Rear Wheels and Cab

CAUTION: ***Insufficient clearance between rear tires and body structure could cause damage to the body during suspension movement. Allow at least 8 inches clearance (See Figure 5-2.)***

Normal suspension movement could cause contact between the tires and the body. To prevent this, mount the body so that the minimum clearance between the top of the tire and the bottom of the body is 8 inches (203 mm). This should be measured with the body empty. See Figure 5-2.

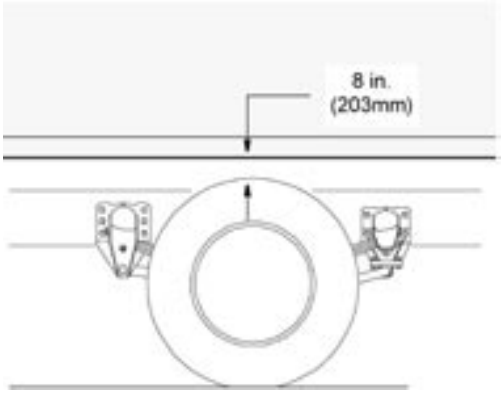

Figure 5-2 Minimum Clearance Between Top Of Rear Tires And Body Structure Overhang.

The true distance from the centerline of the front axle to the back of the cab is 11 inches for Model K270/K370 (279.4mm). It is recommended that the leading edge of the body be mounted a minimum of 4 inches (102mm) behind the cab. The result is a minimum back–of–cab clearance of 15 inches for Model K270/K370 (381mm) from the front axle to the leading edge of the body(A).

CAUTION: **Maintain adequate clearance between back of cab and the front (leading edge) of mounted body. See Figure 5-2.**

Note: **Be sure to provide maintenance access to battery box and fuel tank fill neck.**

See SECTION 3 "DIMENSIONS" for further details on dimensions and clearances.
Also, see APPENDIX B "WEIGHT DISTRIBUTION" for explanation of back–of–cab (BOC)/CA calculations.

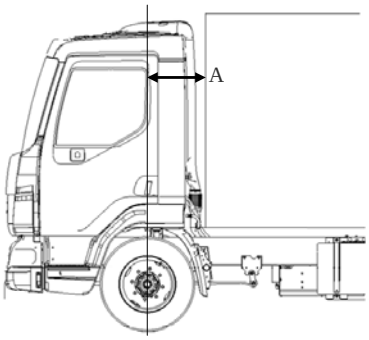

Figure 5-3 Minimum Back of Cab Clearance

https://truckmanualshub.com/

WARNING: If the frame rail flanges are modified or damaged, the rail could fail prematurely and cause an accident. When mounting a body to the chassis, DO NOT drill holes in the upper or lower flange of the frame rail. Mount the body using body mounting brackets or U–bolts.

Body Mounting Using Brackets

CAUTION: Always install a spacer between the body subframe and the top flange of the frame rail. Failure to do so could result in corrosion due to dissimilar materials.

Installation of a spacer between the body subframe and the top flange of the frame rail will help prevent premature wear of the components due to chafing or corrosion.

Frame Sill

If the body is mounted to the frame with brackets, we recommend that the frame sill spacer be made from a strip of rubber or plastic (delrin or nylon). These materials will not undergo large dimensional changes during periods of high or low humidity. The strip will be less likely to fall out during extreme relative motion between body and chassis.
See Figure 5-4.

https://truckmanualshub.com/

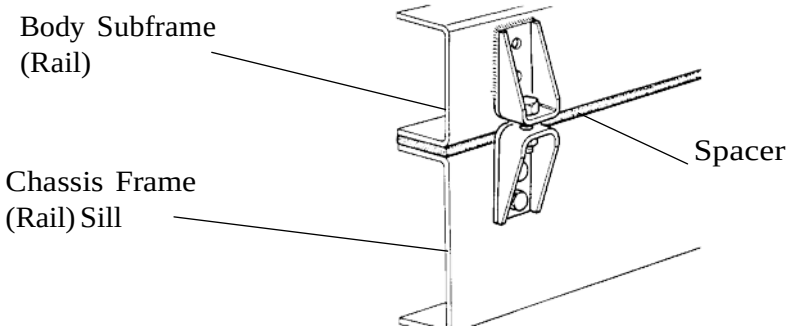

Figure 5-4 Spacer Between Frame Sill and Body Rail - Rubber or Plastic

Brackets

When mounting a body to the chassis with brackets, we recommend designs that offer limited amount of relative movement, bolted securely but not too rigid. Brackets should allow for slight movement between the body and the chassis. For instance, Figure 5–5 shows a high compression spring between the bolt and the bracket.

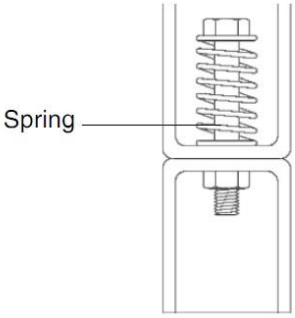

Figure 5-5 High Compression Spring Between the Mounting Bolt and Upper Bracket

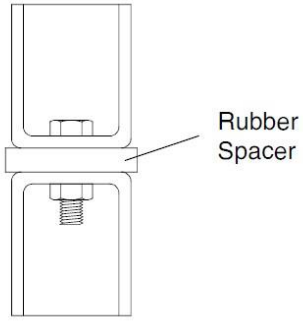

Figure 5-6 Rubber Spacer Between Brackets

Another possibility is mounting a rubber spacer between the brackets. See Figure 5-6.
These designs will allow relative movement between the body and the chassis during extreme frame racking situations. Extreme frame racking and mountings that are too rigid, could cause damage to the body. This is particularly true with tanker installations.

Mounting Holes

When installing the lower bracket on frame rails the mounting holes in the chassis frame bracket and frame rail must comply with the general spacing and location guidelines illustrated in Figure 5-7. The hole diameter should not exceed the bolt diameter by more than .060 inches (1.5 mm).

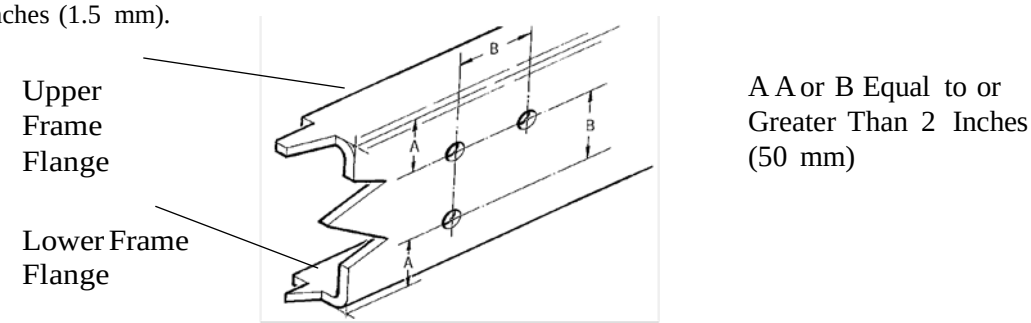

Figure 5-7 Hole Locations Guidelines for Frame Rail and Bracket

https://truckmanualshub.com/

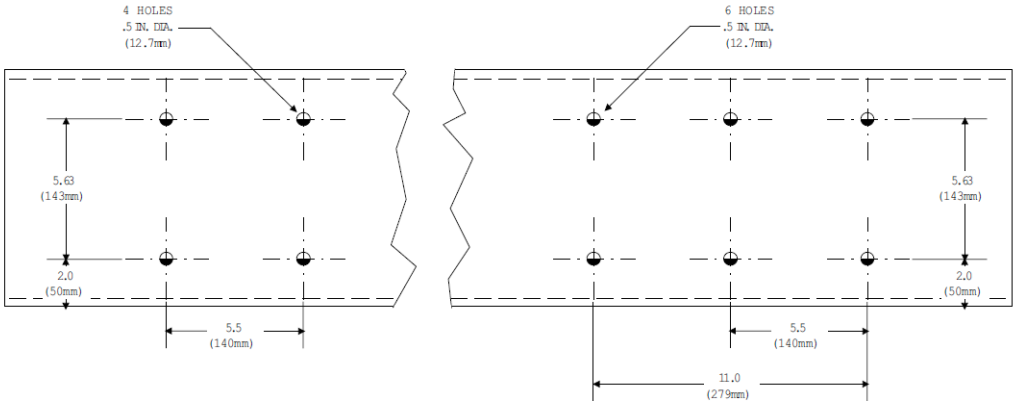

Figure 5-8 Crossmember-Gusset Hole Pattern Requirements. [inch(mm)]

Frame Drilling

WARNING: When mounting a body to the chassis, DO NOT drill holes in the upper or lower flange of the frame rail. If the frame rail flanges are modified or damaged, the rail could fail prematurely and cause an accident. Mount the body using body mounting brackets or U–bolts.

WARNING: Use care when drilling the frame web so the wires and air lines routed inside the rail are not damaged, Failure to do so could cause an inoperable electrical or air system circuit.

WARNING: Do not drill new holes any closer than 2 inches (50 mm) to existing holes. Frame drilling affects the strength of the rails.

Hole Location Guidelines

Holes must be located from the flange as indicated in Figure 5-7. They must be no closer than 2 inches (50 mm) to each other.

Note: If your design permits placement of body mounting brackets at crossmember locations, you can use the crossmember gusset bolt holes for body mounting. See Figure 5-8

BODY MOUNTING USING U–BOLTS

Spacers

If the body is mounted to the frame with U–bolts, use a hardwood sill [minimum 1/2 inch (12 mm) thick] between the frame rail and body frame to protect the top surface of the rail flange.

https://truckmanualshub.com/

WARNING! Do not allow the frame rails or flanges to deform when tightening the U–bolts. It will weaken the frame and could cause an accident. Use suitable spacers made of steel or hardwood on the inside of the frame rail to prevent collapse of the frame flanges.

Use a hardwood spacer between the bottom flange and the U–bolt to prevent the U–bolt from notching the frame flange. See Figure 5-9.

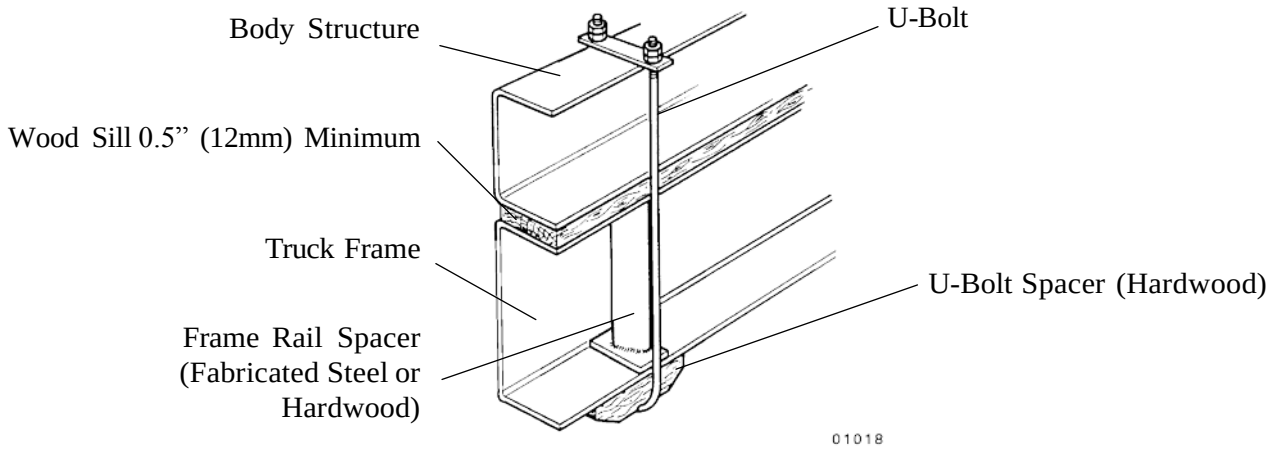

Figure 5-9. Acceptable U-Bolt Mounting with Wood and Fabricated Spacers

WARNING! Do not allow spacers and other body mounting parts to interfere with brake lines, fuel lines, or wiring harnesses routed inside the frame rail. Crimped or damaged brake lines, fuel lines, or wiring could result in loss of braking, fuel leaks, electrical overload or a fire. Carefully inspect the installation to ensure adequate clearances for air brake lines, fuel lines, and wiring. See Figure 5–10.

CAUTION: Mount U–bolts so they do not chafe on frame rail. Failure to do so could result in premature wear of the U-bolt or frame rail.

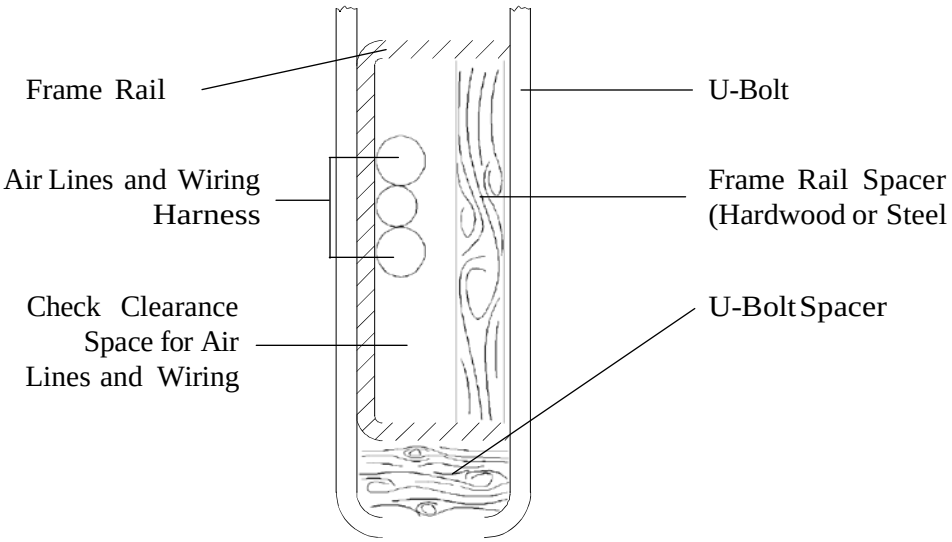

Figure 5-10. Clearance Space for Air Lines and Cables

https://truckmanualshub.com/

WARNING! Do not notch frame rail flanges to force a U–bolt fit. Notched or damaged frame flanges could result in premature frame failure. Use a larger size U–bolt. Use a hardwood spacer as shown in Figure 5-9.

REAR BODY MOUNT

When U–bolts are used to mount a body, we recommend that the last body attachment be made with a “fishplate” bracket. See Figure 5-11. This provides a firm attaching point and helps prevent any relative fore or aft movement between the body and frame.

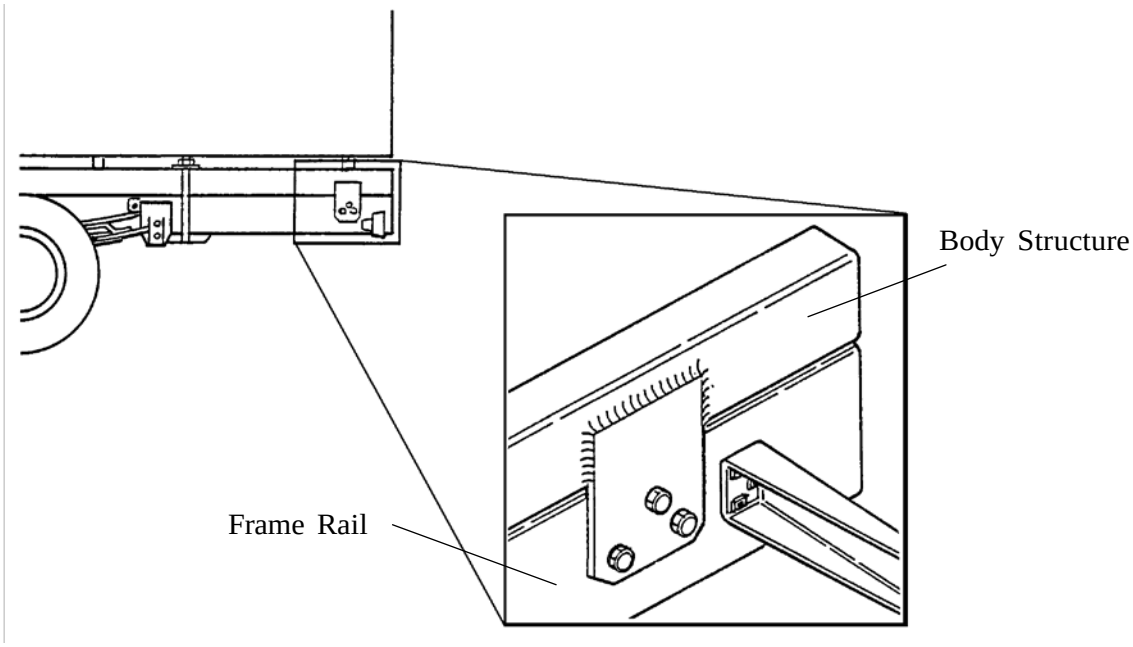

Figure 5-11 Example of Fishplate Bracket at Rear End of Body, used with U-Bolts

https://truckmanualshub.com/

FRAME MODIFICATIONS INTRODUCTION

Kenworth offers customer specified wheelbases and frame overhangs. So, in most cases frame modifications should not be necessary.

However, some body installations may require slight modifications, while other installations will require extensive modifications. Sometimes an existing dealer stock chassis may need to have the wheelbase changed to better fit a customer's application. The modifications may be as simple as modifying the frame cutoff, or as complex as modifying the wheelbase.

DRILLING RAILS

If frame holes need to be drilled in the rail, see SECTION 4 BODY MOUNTING for more information.

MODIFYING FRAME LENGTH

The frame overhang after the rear axle can be shortened to match a particular body length. Using a torch is acceptable; however, heat from a torch will affect the material characteristics of the frame rail. The affected material will normally be confined to within 1 to 2 inches (25 to 50mm) of the flame cut and may not adversely affect the strength of the chassis or body installation.

CHANGING WHEELBASE

Changing a chassis' wheelbase is not recommended. Occasionally, however, a chassis wheelbase will need to be shortened or lengthened. Before this is done there are a few guidelines that should to be considered.

WARNING! *When changing the wheelbase, be sure to follow the driveline manufacturer's recommendations for driveline length or angle changes. Incorrectly modified drivelines can fail prematurely due to excessive vibration. This can cause an accident and severe personal injury.*

Before changing the wheelbase, the driveline angles of the proposed wheelbase need to be examined to ensure no harmful vibrations are created. Consult with the driveline manufacturer for appropriate recommendations.

Before the rear suspension is relocated, check the new location of the spring hanger brackets. The new holes for the spring hanger brackets must not overlap existing holes and should adhere to the guidelines in the "FRAME DRILLING" section of this manual.

When shortening the wheelbase, the suspension should be moved forward and relocated on the original rail. The rail behind the suspension can then be cut to achieve the desired frame overhang. See **FIGURE 6-1**.

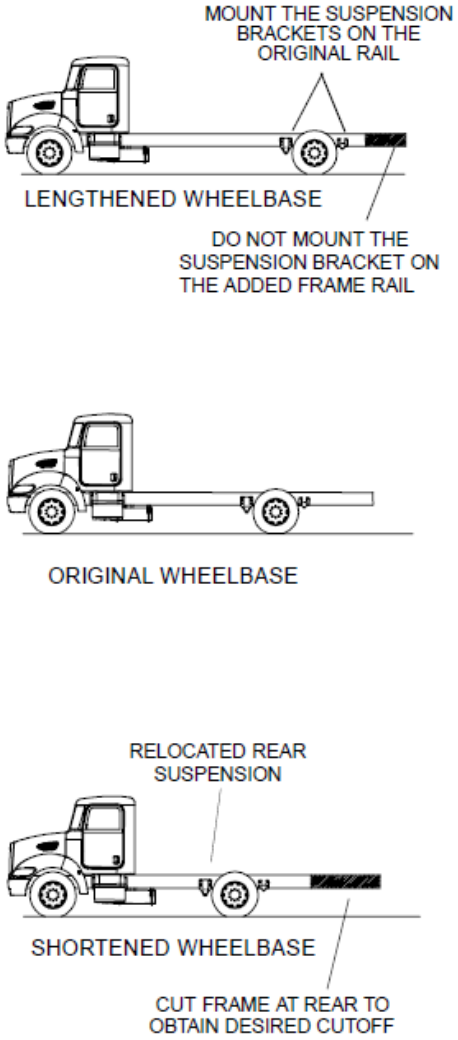

Figure 6-1 Wheelbase Customization

https://truckmanualshub.com/

CROSSMEMBERS

After lengthening a wheelbase, an additional crossmember may be required to maintain the original frame strength. Con-tact Dealer for crossmember locations.

The maximum allowable distance between the forward suspension crossmember and the next crossmember forward is 47.2 inches (1200 mm). If the distance exceeds 47.2 inches (1200 mm) after the wheelbase is lengthened, add a crossmember between them. See Figure 5-4. See Figure 4-7 on page 4-3 for crossmember hole patterns.
FIGURE 6-2. Crossmember Spacing Requirements **FRAME MODIFICATIONS** Peterbilt Motors Company 6-2

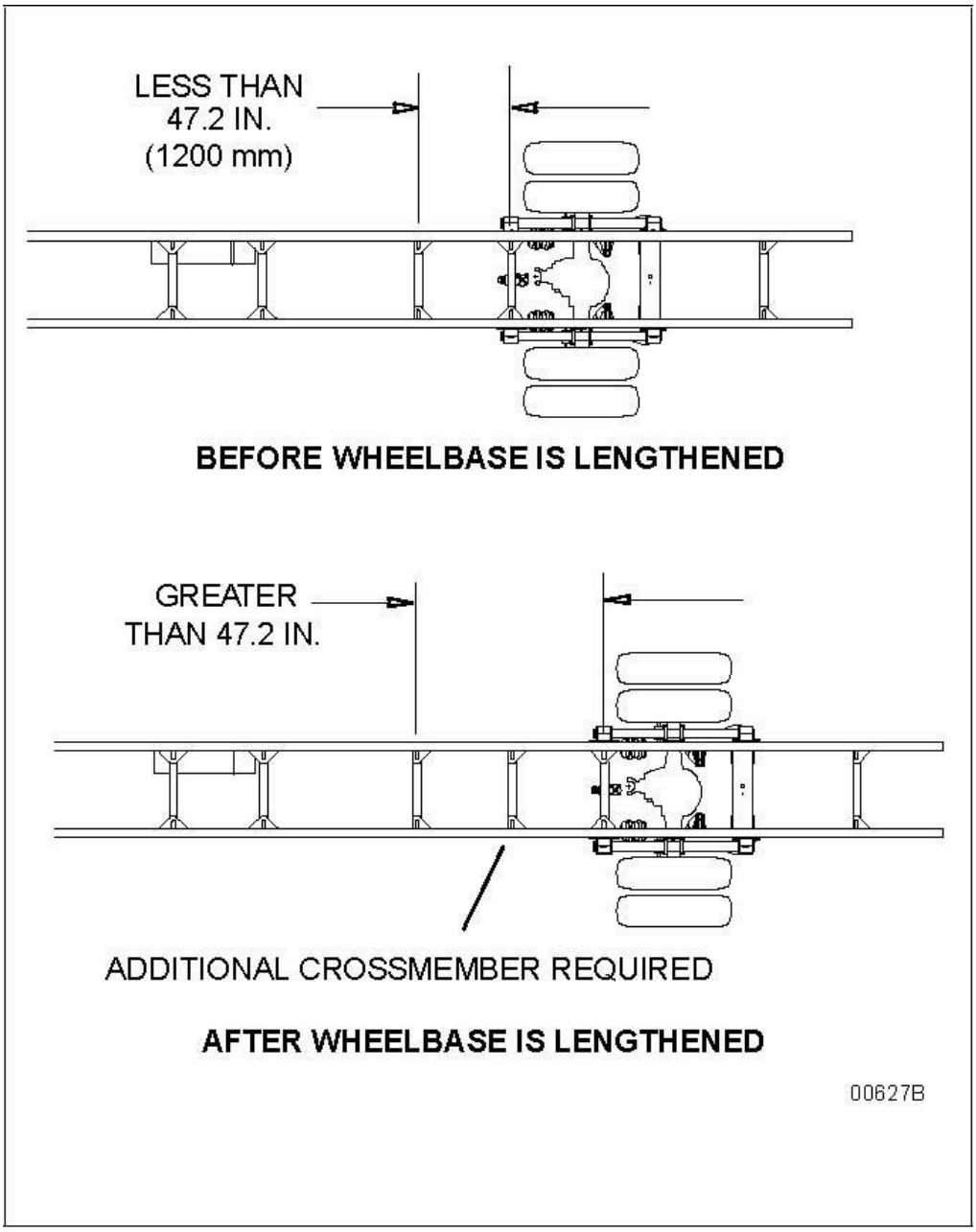

Figure 6-1 Crossmember Added When Distance Exceeds 60 Inches (1524 mm)

https://truckmanualshub.com/

TORQUE REQUIREMENTS

Torque values apply to fasteners with clean threads, lightly lubricated, with hardened steel washers, and nylon-insert nuts.

Table 6-1 Customary Grade 8 UNF or UNC

Fastener	Torque	
Size	**Nm**	**Lb-Ft**
5/16	22-30	16-22
3/8	41-54	30-40
7/16	75-88	55-65
½	109-122	80-90
9/16	156-190	115-140
5/8	224-265	165-195
¾	394-462	290-340
7/8	517-626	380-460
1	952-1129	800-830
1-1/8	1346-1591	990-1170
1-1/14	1877-2217	1380-1630

Table 6-2 U.S. Customary - Grade 8 Metric Class 10.9

Fastener	Torque	
Size	**Nm**	**Lb-Ft**
M6	9-15	7-11
M8	23-31	17-23
M10	33-43	24-32
M12	75-101	55-75
M14	134-164	99-121
M16	163-217	120-160
M20	352-460	260-340

https://truckmanualshub.com/

ELECTRICAL Introduction

Through the use of an optional body harness and additional spare circuits, we have reduced the complexity associated with adding common circuits to a body installation.

Note: The most common circuits that body builders may need are pre-connected to this optional wiring harness.

.

ELECTRICAL C I R C U I T S

Capacity

WARNING! **Do not install an electrical circuit that requires more amperage (electrical capacity) than what is available in the specific chassis circuit. An overloaded circuit may cause severe damage. Compare the** amperage requirements of the new circuit to the electrical current capacity of the existing **chassis circuit before adding the body or other equipment.**

https://truckmanualshub.com/

Data Bus Communication

WARNING! The Data Buss for the communication between electronic control units must adhere to the guidelines outlined under SAE J1939 documentation. The Euro 6 LFNA Model has multiple CAN(Controller Area Networks) busses and care must be taken if an interface is required. Please contact the local Paccar Service Representative for appropriate assistance and information.

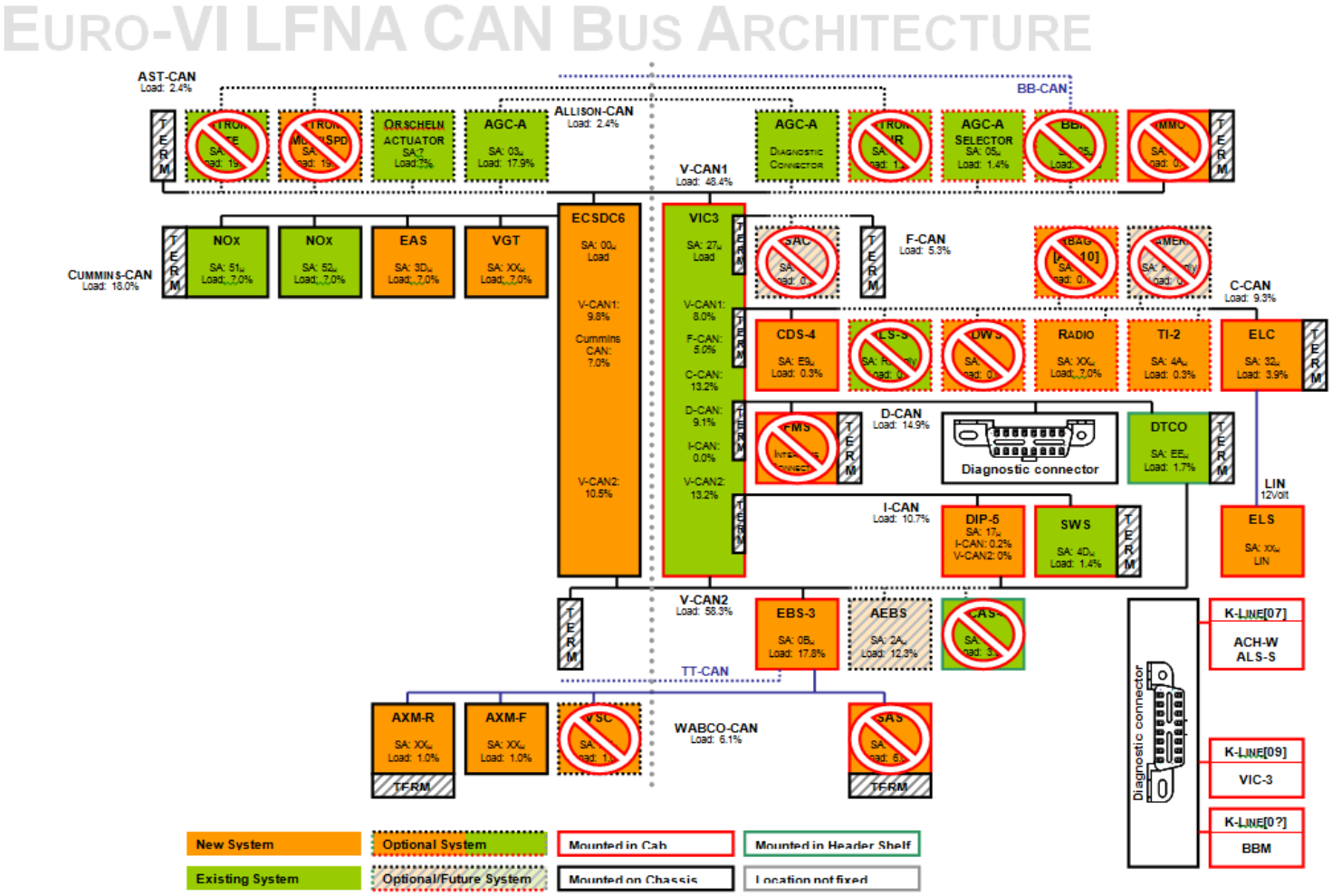

Figure 7-2 Data Bus Communication Architecture

https://truckmanualshub.com/

Cab/Chassis Interface:

The EJB(Electrical Junction Box)

Location: Firewall(opposite side of steering column)

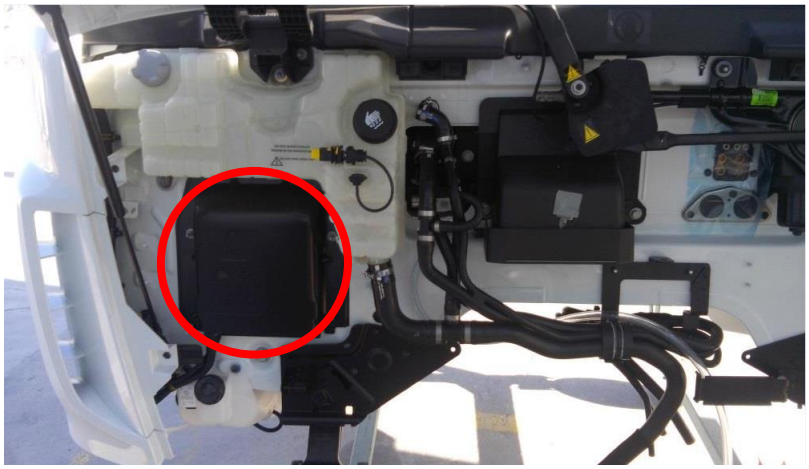

Figure 7-3.1 Electrical Junction Box Location

Figure 7-2.2 Inside View - Electrical Junction Box Location

EJB Connector Identifiers:

Front View = Front of Vehicle view
Rear View = Passenger Seat view

(see next page for clarity)

https://truckmanualshub.com/

LF EURO 6 CAB INTERFACE NAMES

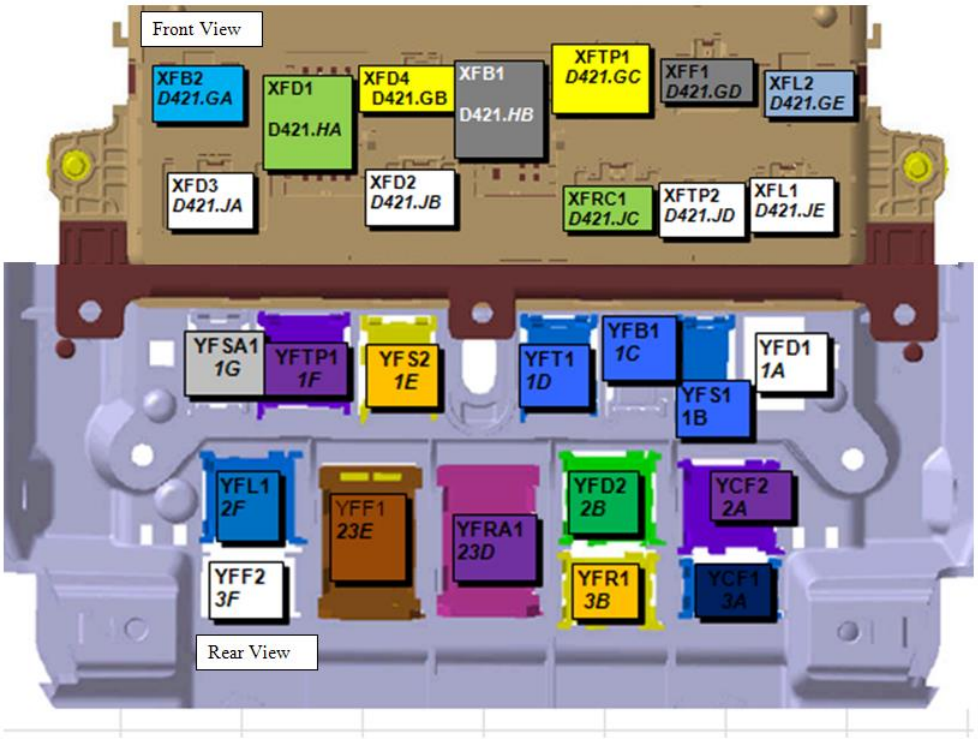

Figure 7-3 LF Euro 6 Cab Interface Names

The EJB contains both 24VDC and 12VDC circuitry for the vehicle. Contact the local Paccar Service Representative for the appropriate circuitry identification if access to this panel is required.

https://truckmanualshub.com/

XFB2	XFD1	XFD4	XFB1	XFTP1	XFF1	XFL2
XFD3		XFD2		XFRC1	XFTP2	XFL1
YFD1	YFS1	YFB1	YFT1	YFS2	YFTP1	YFSA1
YCF2	YFD2		YFRA1	YFF1		YFL1
YCF1	YFR1					YFF2

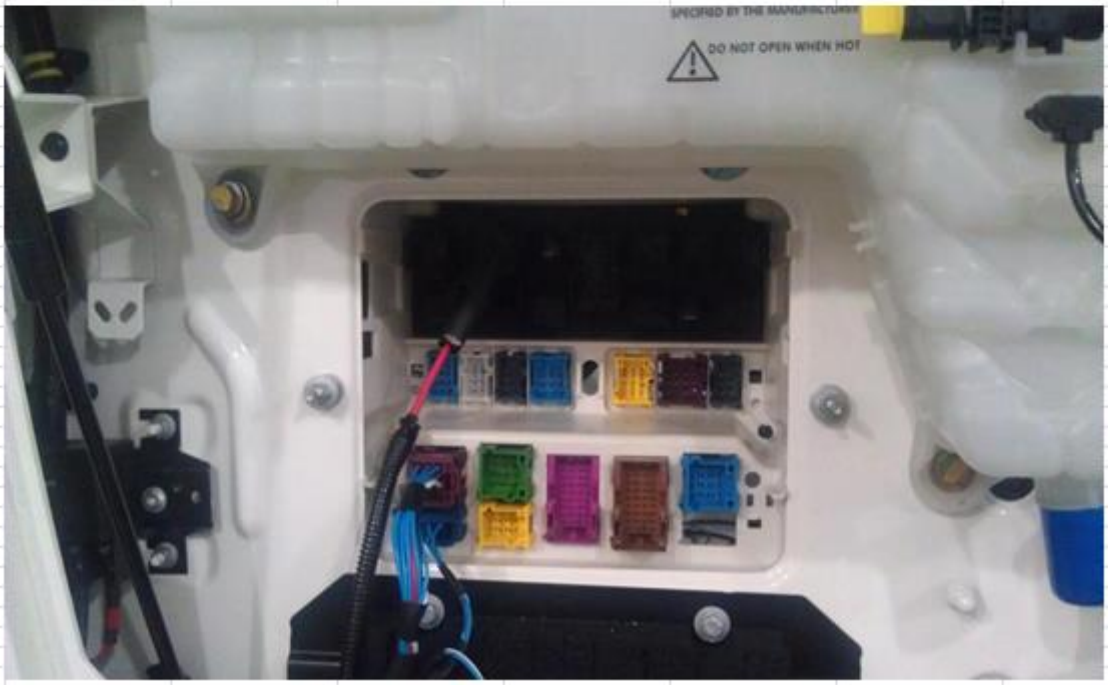

https://truckmanualshub.com/

Controllers

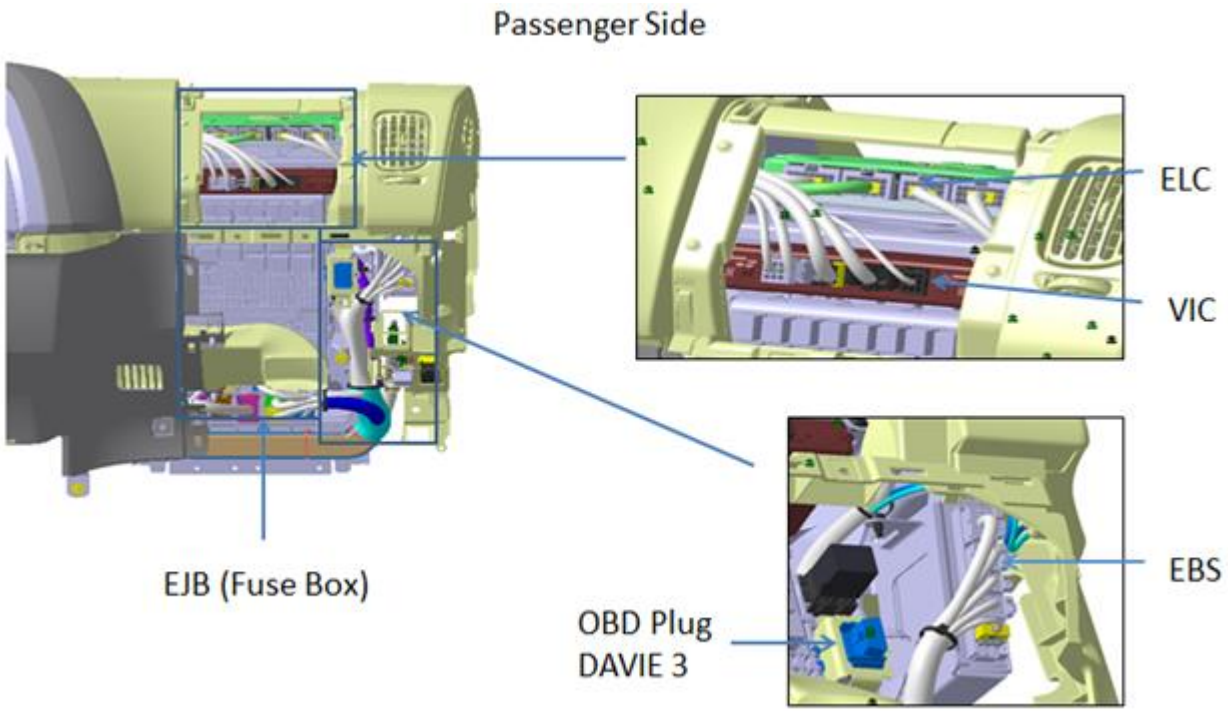

Figure 7-4 Controllers

The EJB is the electrical load center for the cab. The cab and the associated controllers listed operate on 24VDC. The 12/24 VDC converter located in the battery box supplies the necessary power requirements.

The ELC(Electronic Lighting Controller) supplies the signals for all the lighting functions(24VDC in cab and roof) and it's outputs are used to activate 24VDC relays in the electrical load center mounted in the battery box. These relays in turn control all the 12VDC exterior lighting.

The VIC(Vehicle Intelligence Center) is the main controller and communicator for the vehicle.

The EBS(Electronic Braking System) is the controller for the EoA(Electric over Air) braking system.

The OBD plug in the image above is the 16-pin style OBD connector typically found in passenger cars. It is 24VDC and is to be used with the DAVIE Service Tool. Communication with the engine must be done through the 9-pin Diagnostic connector(12VDC) located in the lower dash between the steering wheel and door aperture.

https://truckmanualshub.com/

Dash Controls

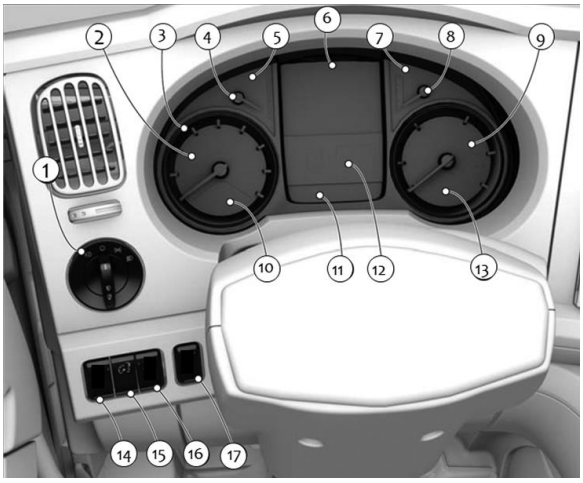

Figure 7-5.1 Dash Contols-1

1 Light switch
2 Instrument panel
3 Speedometer
4 Fuel level and DEF level gauges
5 Warning indicators
6 Master display
7 Warning indicators
8 Air pressure gauge
9 Tachometer
10 Speedometer display
11 Clock, outside temperature and trip odometer display
12 Warning indicators
13 Gear display
14 N/A
15 Instrument lighting(ON/OFF)
16 N/A
17 N/A

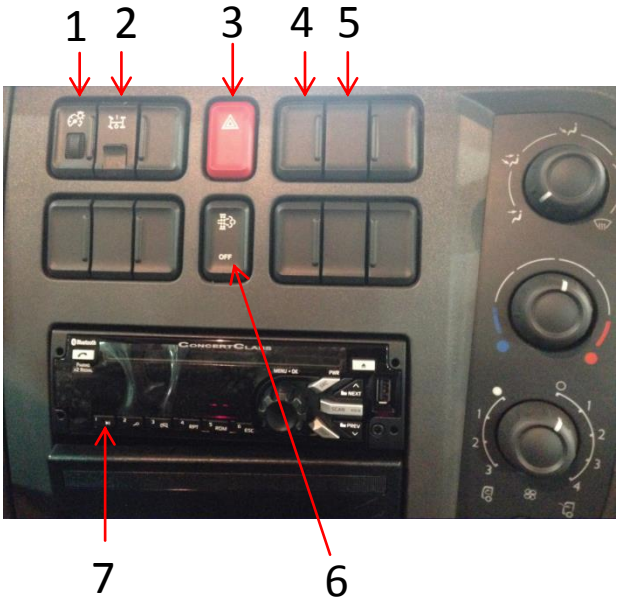

Figure 7-5.2 Dash Contols-2

1 Instrument lighting dimmer
2 PTO switch (Optional)
3 Hazard lights
4 Air suspension dump switch position (if optioned)
5 Differential lock switch position (if optioned)
6 Diesel particulate filter Regen (DPF)
7 Radio and storage

https://truckmanualshub.com/

Power Distribution Center.

Figure 7.6.1 Pwer Distribution Center

Reference Figure 7.6.2

Orange

Pin	Description
4C	PDC Ground
4D	PDC Ground
4F	ECM Power (12V+)
4G	ECM Power (12V+)
4B	XMSN ECU (12V+)

Grey

Pin	Description
1A	DIP HL (12V+)
1B	DIP HL (24V+)
1C	LH Turn (12V+)
1D	LH Turn (24V+)
1E	RH Turn (24V+)
1F	RH Turn (12V+)
1G	Main HL (24V+)
1H	Main HL (12V+)

Black

3A	Heat Fuel Filter (12V+)
3F	PDC Ground
3G	PDC Ground
3H	Converter Ignition
3C	9-pin Diagnostic(12V+)
3B	XMSN Actuator

Brown

12A	Fog Lamp (12V+)
12B	Fog Lamp Sw (24V+)
12C	Chassis Ignition (12V+)
12D	Ignition Signal (24V+)
12E	NOX up (12V+)
12F	NOX down (12V+)
12G	Body Lamp (24V+)
12H	Body Lamp (12V+)

Red

2C	Stop Lamp (12V+)
2D	Stop Lamp (24V+)
2E	Clearance (24V+)
2F	Clearance (12V+)

Green

11A	DCU Power (12V+)
11B	Line heat (12V+)
11C	Starter sol (12V+)
11D	Start Signal (24V+)
11E	Ignition Signal (24V+)
11F	Engine Ignition (12V+)
11G	ECM w/u (12V+)
11H	DCU w/u (12V+)

The voltage converter provides 24V to cab systems. It is located inside the battery box. This voltage converter works with the Power Distribution Center (PDC) with the following characteristics:
12V Input – 24V output
Input Current: 80 Amps
Output Current: 40
Amps
Temperature range: -40C to +85C

https://truckmanualshub.com/

The output voltage from cab to chassis is 24V. The spare circuits in the PDC located in the battery box as described in Table 7-1 are 12V.

Spare Circuit Powered Through:	Minimum Wire Gauge	Pin A	Pin B	Circuit PDC Terminal	Capacity (Fuse number/Amperes). Install a fuse of appropriate rating.	Numbered connector Location PDC at battery box.
Spare 1	16	RG7	RH7	2B	F20/10Amp	Red Connector (B068-7099-F)
Spare 2	16	RG7	RH7	2G	F20/10Amp	Red Connector (B068-7099-F)

Table 7-1 Additional Spare Circuits for Wiring

On Power Distribution Center (chassis).

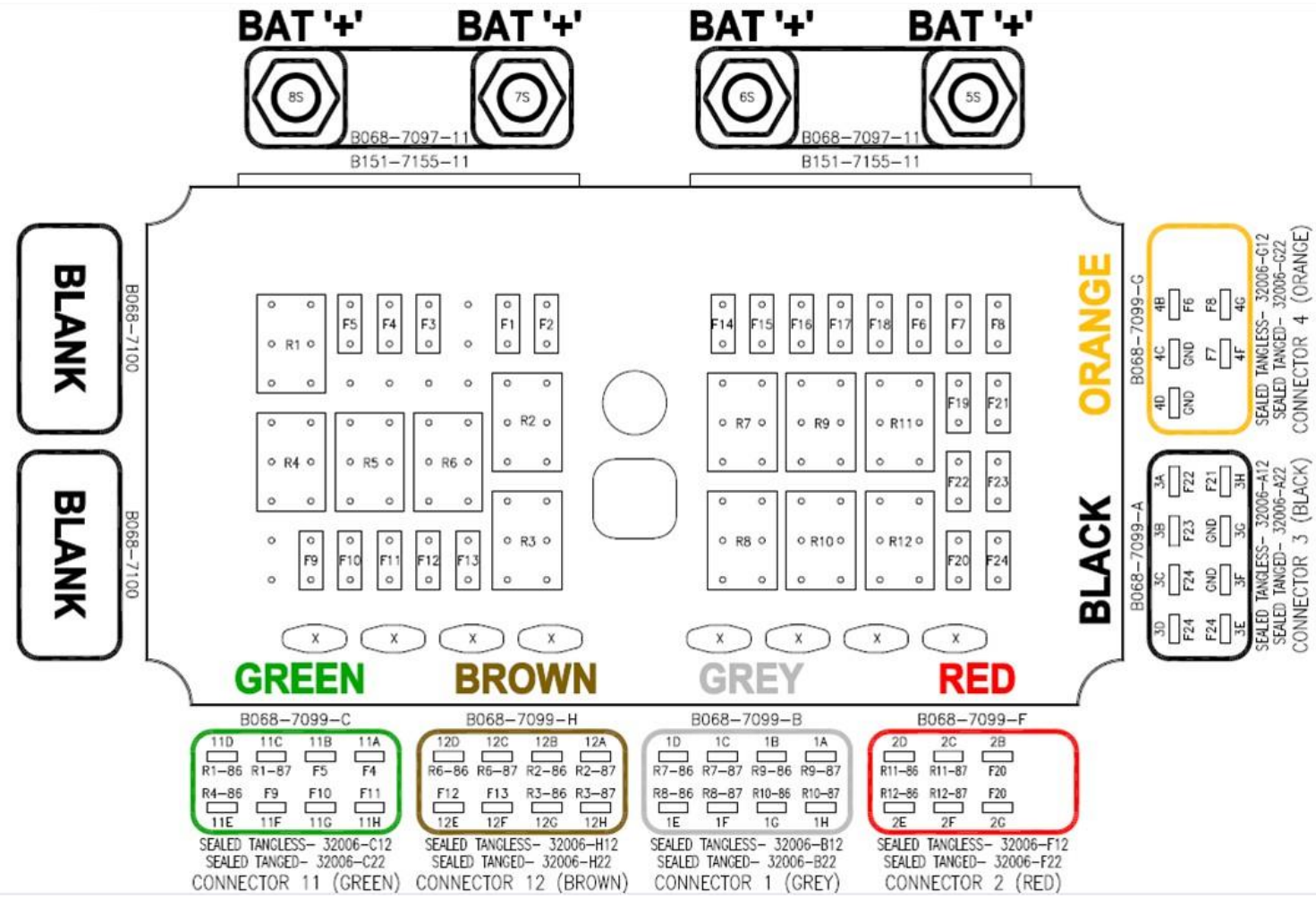

Figure 7-6.2 Power Distribution Center(Chassis)

https://truckmanualshub.com/

Body Builder 9 pin connector

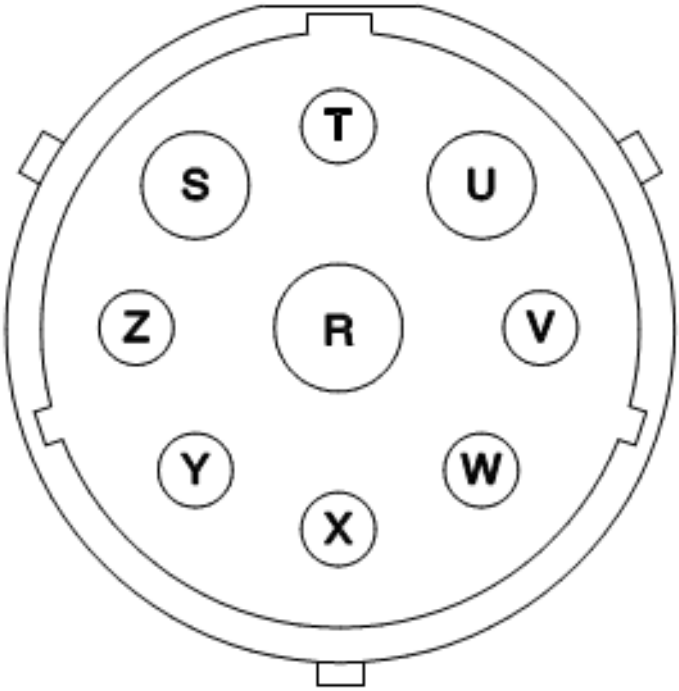

Figure 7-7 Body Builder 9 Pin Connector

BE0084

The connector shown above is available for exterior lighting functions in addition to lighting circuits at the end of frame.

Table 7-2 Body Builder 9 Pin Connector

WIRE DESCRIPTION	FUNCTION	PIN	CIRCUIT	WIRE COLOR	CAPACITY FUSE (AMPERES NUMBER)	WIRE GAUGE
GND	Ground	R	WHT2400	White		6
Stop LP	Stop lamp	S	YEL2601	Yellow	F18 / 25A	8
Not Connected		T	**Not Connected**			
Not Connected		U	**Not Connected**			
Tails/Marker LP	Tails / markers lamps	V	YEL2422	Yellow	F19 / 20A	12
Turn RH rear	Turn signal right hand rear	W	YEL2007	Yellow	F15 / 15A	12
Backup LP	Backup lamp	X	YEL2960	Yellow	TCU Relay	12
Turn LH rear	Turn signal left hand rear	Y	YEL2006	Yellow	F14 / 15A	12
Markers LP	Markers lamps	Z	YEL2412	Yellow	F19 / 20A	12

https://truckmanualshub.com/

Model K270/K370 PTO Wiring Information

Wiring of the Current Model K270/K370 is different from previous version of the Model K270/K370. Please see the information below for basic wiring and functionality.
1) If equipped, the factory PTO dash switch will tell the VIC to go to PTO mode.
2) J124 connector on the transmission needs 12V to tell the Allison TCM to enable PTO mode.
3) J125 connector on the transmission is a ground output signal from the Allison TCM for the PTO.
4) J126 connector on the transmission is a 24V output signal from the VIC when the PTO dash switch is on.
5) J128 connector on the transmission needs a ground to feedback to the VIC for PTO engaged status (must occur within 3-4 seconds after PTO switch). Option 1: Provide a ground from the PTO engaged switch to J128. Option 2: J128 & J125 can be spliced together for the feedback ground to the VIC. Please note: J128 & J125 will not mate together, so connectors will have to be cut off and spliced.
6) Pin 10 of the 12-pin Remote PTO connector (P124) on the engine harness –OR- pin B of the 3-pin connector (J144) on the engine harness needs a ground to feedback to the VIC for PTO engaged status. **This performs the same function as item 5 above.** This is primarily used for remote set-ups outside the cab.

As an example for setting up a PTO if using the factory PTO dash switch and one pre-set RPM:
(Refer Figure 7.9)
A) Use J126 to drive your PTO solenoid. This is 24V, so you may need to use a relay if the PTO requires 12V or a ground.
B) Send 12V to connector J124 for the Allison TCM when the PTO is engaged. This 12V can be "borrowed" from the relay used in step A) above.
C) Provide a ground to J128 for feedback to the VIC when the PTO is engaged. This can be done by either splicing J125 & J128 together or by running a separate wire from the switch directly on the PTO (if equipped) to J128. This ground must be applied within 3-4 seconds after the PTO switch is enabled.
D) Set your desired engine RPM for pre-set speed with DAVIE. This is found under Customer Parameters.

Please note: This information relates only to setting up the mechanical PTO for operation. This does not address the additional function of ESC (Engine Speed Control), as this is a separate function. Engine Speed Control must be enabled in the VIC programming and requires a modified PRS file. Instructions for use of ESC follow.

Engine Speed Control (ESC)

ESC can be fixed (pre-programmed) engine speed or variable engine speed. The Euro 6 only has two pre-programmed engine speeds N2 and N3. N VAR is available using the "SET+" and "SET-" to increase and decrease speed.

To activate these speeds the ESC must first be enabled by providing a high signal (12-24V) on pin 12 of the 12-pin connector on the engine harness (P124).

- The N2 and N3 can then be activated by providing a high signal on pins 7 and 6 respectively of the 12-pin connector on the engine harness (P124).
- N VAR can be activated by providing a high signal on pin 8 of the 12-pin connector on the engine harness (P124). (N refers to a Speed Set point)

If N VAR variable control is desired with the steering wheel switches:

- A high signal (12-24V) is provided to pin 12 of the 12pin connector on the engine harness (P124).
- A high signal is provided to pin 8 of the 12pin connector (P124).
- Use the "SET+" and "SET-"steering wheel switches to bump the throttle up and down.
- The parking brake must be set for proper functionality.

https://truckmanualshub.com/

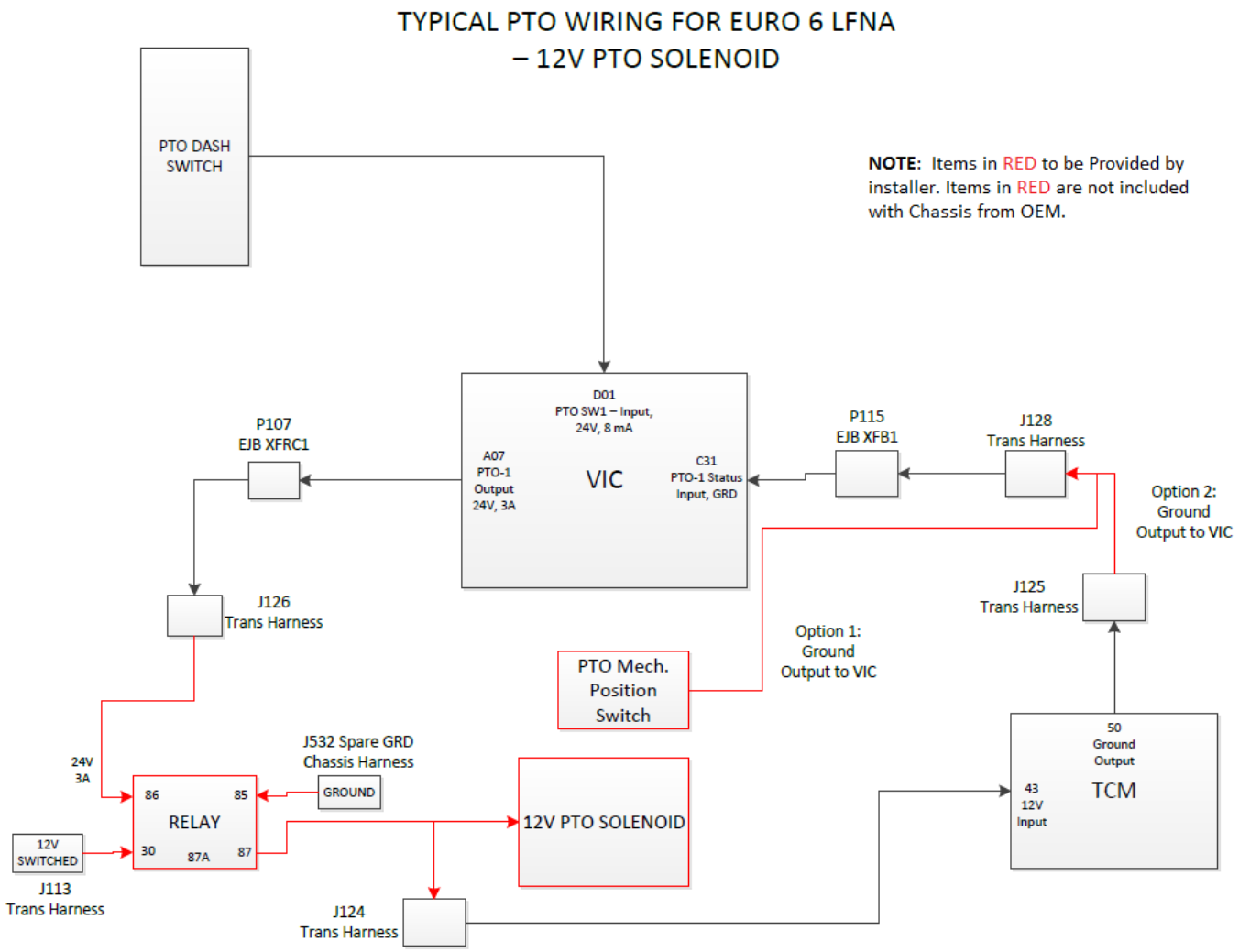

Figure 7-8.1 Typical PTO Wiring for Euro 6 LFNA – 12V PTO Solenoid

https://truckmanualshub.com/

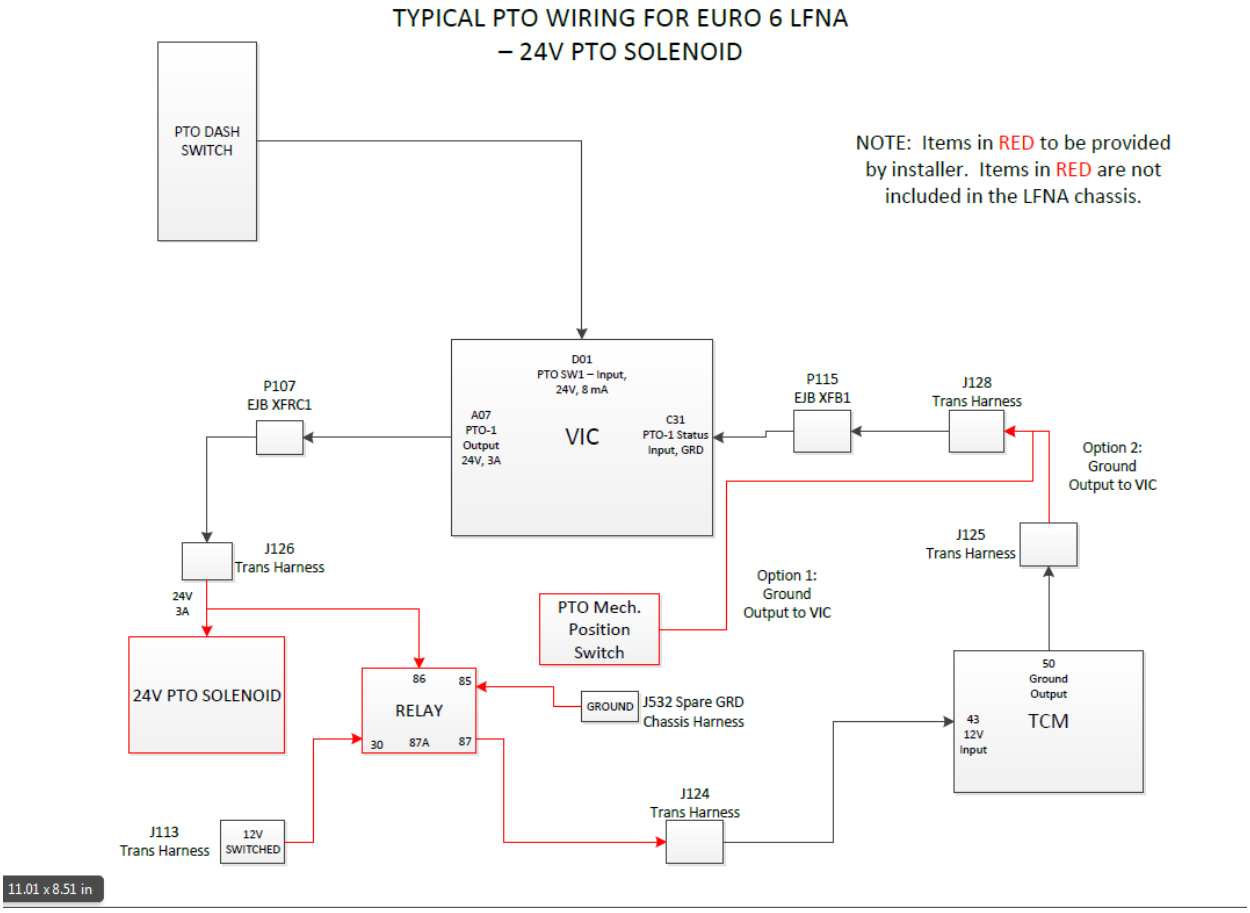

Figure 7-8.2 Typical PTO Wiring for Euro 6 LFNA – 24V PTO Solenoid

https://truckmanualshub.com/

Remote PTO / Throttle Harness

This option provides a connection from the engine ECU to the end of the frame to fit the engine throttle remote control and PTOs. Controls are not provided. A 12-pin Deutsch connector (Deutsch P/N DT06-12SA-P012) is included.

Adding Electrical Options

WARNING!

Follow the engine manufacturer's guidelines for use of these circuits. See your engine manufacturer to verify that the engine is programmed correctly for the intended applications. Failure to properly program the engine or wire these circuits could cause an accident.

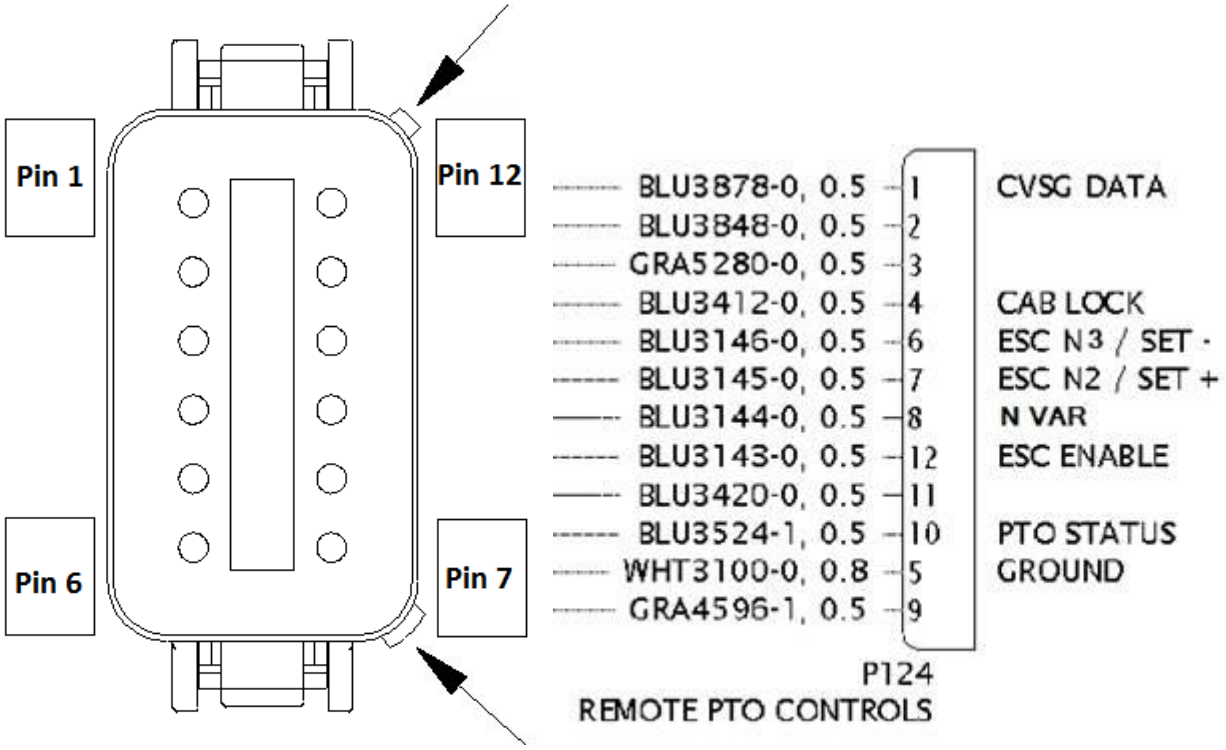

Figure 7-9 A 12-pin Deutsch connector and remote PTO Control

https://truckmanualshub.com/

VEHICLE IDENTIFICATION NUMBER

A 17–character number (numeral and letter combination) forms the Vehicle Identification Number (VIN) which includes the Chassis Number. It contains among other information, the model year (4), assembly plant (5), and vehicle serial number (6). See Figure A–1

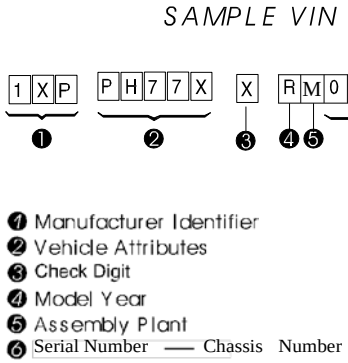

Figure A-1. Vehicle Identification Number (VIN).

The model year (4) is designated by an alphanumeric code in the tenth character position in the VIN. See Table A-1 and Figure A–1.

Code	Year
C	2012
D	2013
E	2014
F	2015
G	2016
H	2017

Table A-1. Model Year (Code) Designations.

VIN Location

The VIN is marked on the Incomplete Vehicle Certification Label (on trucks). It is located either on the driver's door edge or door frame. See Figure A–2.

Chassis Number Locations

The Chassis Number comprises the last six characters of the VIN.

- The Model K270/K370 chassis number is shown in multiple locations.
- Right frame rail, bottom flange (underside), about 4 to 4.5 ft. from the front end: stamped.
- Left frame rail, top of flange, about 4 to 4.5 feet from front end: stamped
- Tire, Rim, and Weight Rating Data label.
- Major Components and Weights label.
- Paint Identification label.

https://truckmanualshub.com/

CERTIFICATION LABELS

Components and Weights Label

The Major Components and Weights Label is located on either the driver's side door edge or on the door frame. See Figure A–2. It includes: chassis weight and gross weight; plus, model and serial numbers for the vehicle, engine, transmission, and axles.

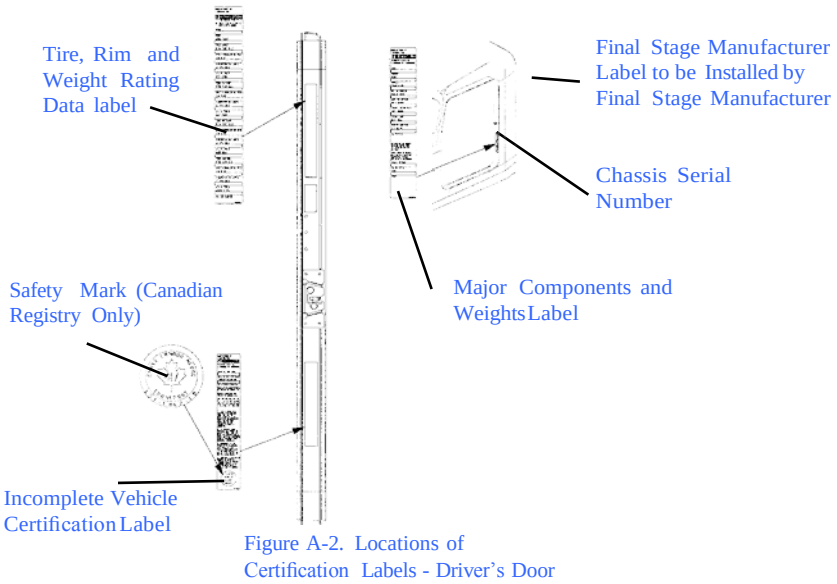

Figure A-2. Drivers Door and Door Frame Label

Tire/Rim and Weight Rating Data Label

The Tire/Rim and Weight Rating Data Label is located on the driver's side door edge, above the door latch. See Figure A–2. It contains the following information:

- GVWR — Gross Vehicle Weight Rating
- GAWR FRONT and REAR — Gross Axle Weight Ratings for Front and Rear Axle
- TIRE/RIM SIZES AND INFLATION PRESSURES — Tire/Rim Sizes and Cold Pressure Minimums
- Chassis (Serial) Number

Note:

GVWR is the TOTAL WEIGHT the vehicle is designed to carry. This includes the weight of the empty vehicle, loading platform, occupants, fuel, and any load. Axle weight ratings are listed on the edge of the driver's door.

Incomplete Vehicle Certification Label

The Incomplete Vehicle Certification Label is located on the driver's side door edge below the latch. See Figure A–2. It contains the following information:

- DATE OF MANUFACTURE
- VIN — Vehicle Identification Number
- LISTING OF APPLICABLE FEDERAL MOTOR VEHICLE SAFETY STANDARDS

https://truckmanualshub.com/

COMPONENT IDENTIFICATION

Each of the following components has their own identification label.

Engine Identification

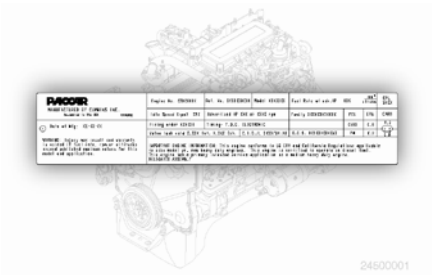

The engine dataplate provides important facts about the engine. The engine serial number (ESN) and control parts list (CPL) provide information for service and ordering parts. The engine dataplate must not be changed unless approved by PACCAR Inc.

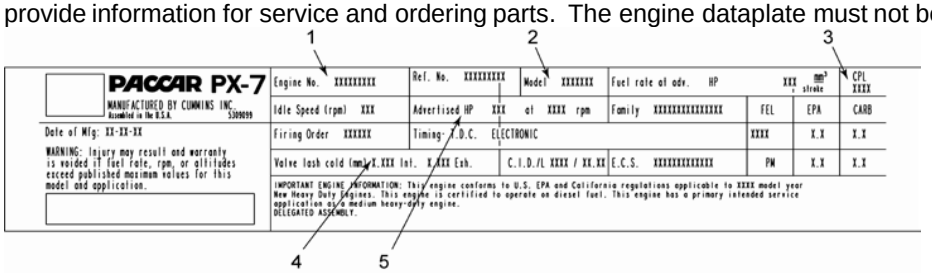

The dataplate is located on rocker lever cover as illustrated.

Have the following engine data available when communicating with a PACCAR Authorized Repair Location:

1. Engine Serial Number (ESN)
2. Engine model information
3. Control Parts List (CPL)
4. Valve Lash
5. Horsepower and rpm rating

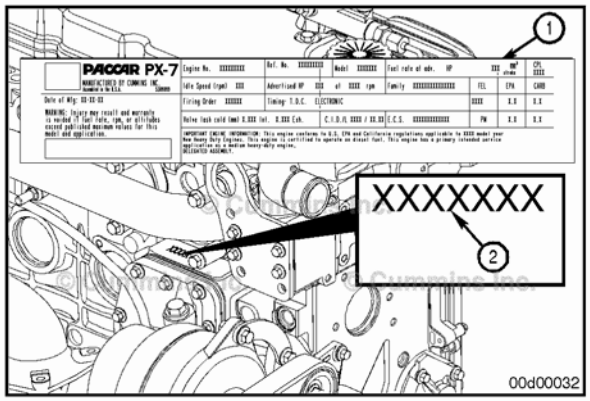

If the engine dataplate (1) is not readable, the ESN (2) can be found on the engine block on top of the lubricating oil cooler housing. Additional engine information is on the electronic control module (ECM) dataplate.

1. Dataplate
2. ESN

Figure A-3 Engine Identification Location

https://truckmanualshub.com/

Transmission Identification

The transmission identification number is stamped on a tag affixed to the right forward side of the transmission case. It includes, among other specifications, the transmission model, serial and part number.

Front Axle Identification

The front axle has an identification tag located on the front axle beam. It includes the axle model, part number and serial number.

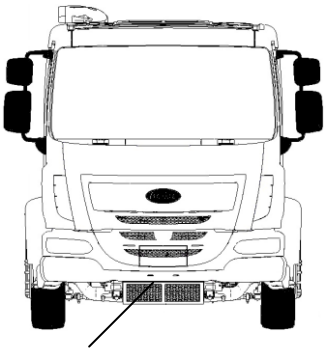

Figure A-4 Front Axle Identification

Rear Axle Identification

The rear axle identification numbering system includes two labels or stamps.

1. Axle Housing Number Tag, located on the left forward side of the housing arm. This tag identifies the axle housing.

2. Axle Differential Carrier Identification, located on the top side of the differential carrier. The following information is either stamped, or marked with a metal tag: Model No., Carrier Production Assembly No., Carrier Assembly Serial No., Gear Ratio, Axle Specifications Number and OEM part number and country of origin.

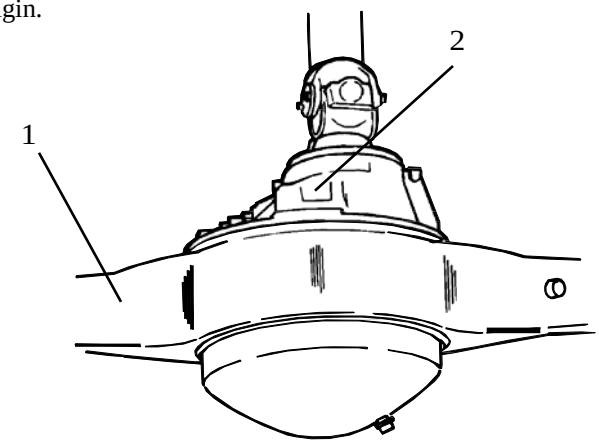

Figure A-5 Rear Axle Identification 1

Note: Illustrated identification tag locations are typical. Actual locations may vary by axle manufacturer and with single versus tandem axles.

Appendix B
Weight Distribution

https://truckmanualshub.com/

INTRODUCTION

In the Medium Duty truck market, matching the wheelbase to the body specification is extremely important. Selection of the wrong wheelbase may lead to premature component failure, poor performance, and ultimately a dissatisfied customer. Before selecting the proper wheelbase, it is important to have a basic understanding of weight distribution.

Abbreviations

Throughout this section, abbreviations are used to describe certain features and requirements of the vehicle (see the list below). Review this list frequently so you know what the abbreviations mean.

AF	=	Frame rail overhang length – behind the rear axle
BL	=	Body Length
CA	=	Back of cab to centerline of rear axle

Note: The Model K270/K370 CA figures are measured from the true back of cab to the centerline of the rear axle. To obtain a usable CA the body builder must subtract any required space behind the cab, which may be needed for other equipment.

CG	=	Center of gravity: the balance point or center of a load. It is usually identified by a circle with alternating black and white quarters.
CGf	=	Distance from the centerline of the front axle to the center of gravity of the load (L). The load can be any load such as a fuel tank, a body, or the payload.
FA	=	Front Axle
GVWR	=	Gross Vehicle Weight Rating
L	=	Load: the weight that is carried. This could be the body, the payload or any item that has its weight distributed between the two axles.
Lf	=	Portion of load (L) carried by front axle
Lr	=	Portion of load (L) carried by rear axle
RA	=	Rear Axle
WB	=	Wheelbase Length

https://truckmanualshub.com/

CALCULATIONS

Weight Distribution without Body

There are two primary equations used in weight distribution calculations:

- The first equation determines the portion of the load carried by the rear axle (Lr).

$$Lr = \frac{CGf}{WB} \times L \qquad \text{Portion of Load Carried by the Rear Axle} \qquad \textbf{Equation 1}$$

- The second determines the portion of the load carried by the front axle (Lf).

$$Lf = L - Lr \qquad \text{Portion of Load Carried by the Front Axle} \qquad \textbf{Equation 2}$$

Note: For the purposes of calculation, the load (L) in these equations can be either actual revenue producing load or it can be other weight that is carried such as the van body or an optional fuel tank.

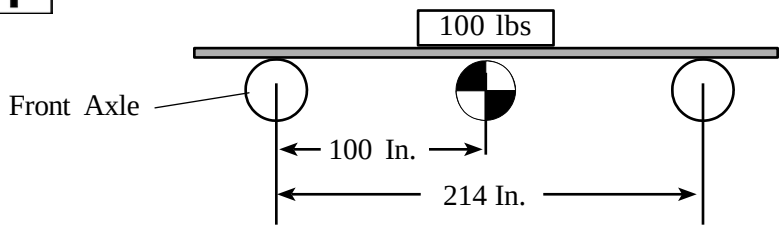

Figure B-1. Balanced Load: CGf 100 in. from front axle

Step 1. Figures B–1 and B–2 show a representation of a 214 inch (5435.6 mm) wheelbase (WB) truck designed to carry a 100–lb. (45.3–kg) load. Figure B–1 represents a truck with the load placed an equal distance between the two axles.

a. For our balanced load example we need to establish the center of gravity location (CGf, as shown in Figure B–1) by dividing the wheelbase by 2:

$$CGf = \frac{214}{2} = 107 \text{ in (2717.8 mm)}$$

b. Use equations 1 and 2 to determine the portions of the load carried by each axle.

- The weight distribution is calculated as illustrated below:

$Lr = \frac{CGf}{WB} \times L$	$\frac{107}{214}(100) = 50$ lbs (23 kg)
$Lf = L - Lr$	$100 - 50 = 50$ lbs (23 kg)

- Since the load is centered between both axles, 50 percent of the load is carried by each axle: i.e., 50 lb. (22.6 kg) is distributed to each axle.

https://truckmanualshub.com/

C. In Figure B–2, the load (L) is located 133 in. (3378 mm) from the front axle. Moving the load towards the rear axle changes the weight distribution. Use equations 1 and 2 to determine the portion of the load carried by each axle.

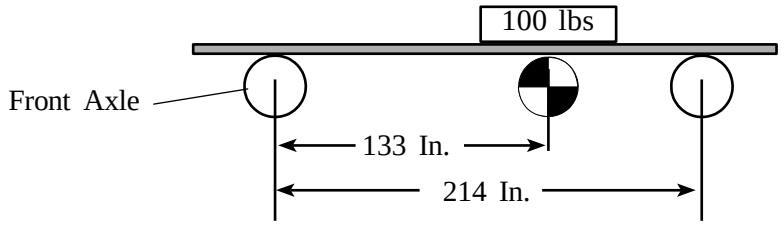

Figure B-2. Unbalanced Load: CGf 133 In. From Front Axle

CGf = 133 in. (3378 mm)

$$Lr = \frac{CGf}{WB} \times L \qquad \frac{133}{214}(100) = 62.14 \text{ lbs } (28.18 \text{ kg})$$

$$Lf = L - Lr \qquad 100 - 62.14 = 38.86 \text{ lbs } (17.6 \text{ kg})$$

- The rear axle now carries a greater proportion of the load than the front axle.

Although it is usually not important to know the CG of the chassis; it is important to know the CG location of truck bodies, accessories, or loads that may be placed on the chassis. This example shows that the location of the CG of an object relative to the front and rear axles (FA and RA) affects the load carried by each axle.

For most relatively uniform objects such as van bodies and fuel tanks, the CG is located close to the midpoint of the object. For non–uniform objects such as liftgates and refrigeration units, obtain the CG from the equipment manufacturer.

https://truckmanualshub.com/

Weight Distribution with Body

Chassis Weights

Step 2. In the following example, a truck is modified to include a van body mounted to the chassis. This example is a chassis, 214 inches (5435.6 mm) in WB, with a standard drivetrain and fuel tank. It is a 26,000 lb. GVWR with a 8,948 lb. front axle and a 17,052 lb. rear axle.

When calculating weight distributions, start by determining chassis ground weights for each axle. The actual chassis weight will vary with the wheelbase and the options installed. Listed in Tables B-1 and B-2 are the chassis tare weights for the standard single rear axle vehicles and each wheelbase configuration.

We see that the 214-inch wheelbase, 2-axle has the following tare weights:

FA = 6263.4
RA = 9628.7

Model K270/K370 with nominal weights and CGs. See your Kenworth Dealer for more exact weights and CGs. It also lists their added weight when installed on the chassis and the location (from the front axle) of the CG of this added weight.

Wheelbase Inches	Front lb (kg)	Rear lb (kg)	Total lb (kg)
214	6263.4 (2,841)	9628.7 (4367.5)	15892.1 (7,208.5)

Table B-1 Model K270/K370 Single Rear Axle "Bare" Chassis Tare Weights (no driver, no fuel)

Note: The weight in Table B-1 represents an example of a standard chassis

https://truckmanualshub.com/

Now we will calculate the distributed weight of van body that weighs 4825 pounds (2188.5 kg). Since an empty van is very close to a uniform object, you can assume that the CG of the van body is at a point equal to half of the BL.

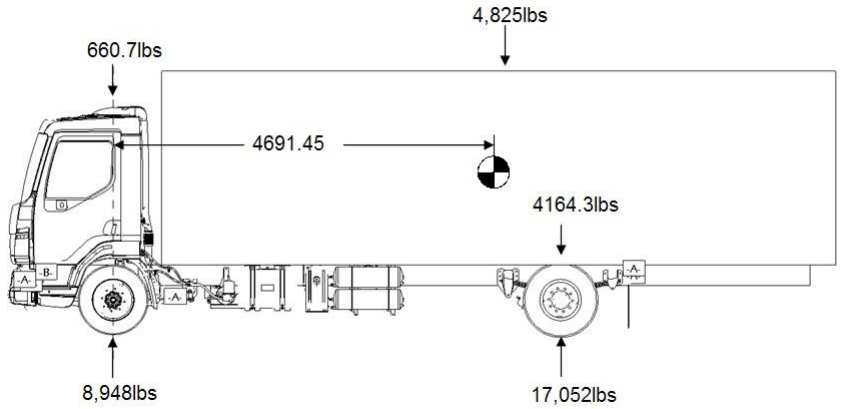

Figure B-3. Balanced Body Unloaded: CGf 184.7 in. (4691.45 mm) from front axle.

When the body is mounted on the chassis, assume that the forward edge is positioned 4 inches (102 mm) behind the back of the cab. This is equivalent to 17.3 inches (439.4 mm) behind the front axle. Therefore, the CG of the body is located 72 inches plus half the body length from the front axle.

Use Equations 1 and 2 to calculate the distributed additional weight of the body:

$$Lr = \frac{CGf}{WB} \times L \qquad \frac{184.7}{214}(4825) = 4164.4 \text{ lbs } (1888.9 \text{ kg})$$

$$Lf = L - Lr \qquad 4825 - 4164.4 = 660.5 \text{ lbs } (299.6 \text{ kg})$$

Adding a liftgate to the van body will present some interesting weight distribution results. We will add a 1455 pound (659.9 kg) liftgate to the end of the van body. The CG location of non-uniform objects, such as a liftgate, must be provided by the equipment manufacturer. For our example, the liftgate manufacturer has provided installation information that indicates the liftgate CGf is located 322.2 in (8183.9 mm) behind the front axle.

Rear Liftgate Example

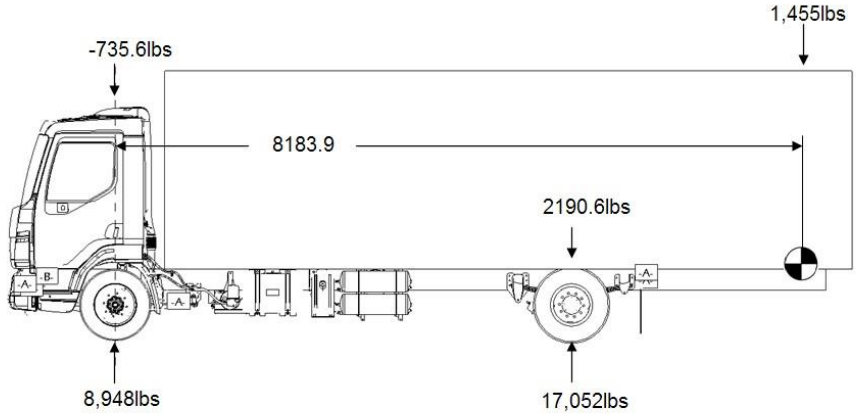

Figure B-4. Liftgate Example: CGf 322.2 in (8183.9 mm) from front axle.

https://truckmanualshub.com/

Use CGf = 246 in equations 1 and 2 to determine how the liftgate weight is distributed to the axles.

$Lr = \frac{CGf}{WB} \times L$	$\frac{322.2}{214} \times 1455 = 2190.6$ lbs (993.6 kg)
$Lf = L - Lr$	$1455 - 2190.6 = -735.6$ lbs (-333.6 kg)

This negative weight on the front axle illustrates the difference between the distribution of weight (L) mounted behind the rear axle versus in front of the rear axle.

- The load carried by the rear axle is greater than the weight of the liftgate itself. Since the weight of the liftgate (added to the vehicle) cannot be greater than 1,455 lb, the front axle loading is reduced by a compensating amount (735.6 lb). The combined weight on the front and rear axles is equal to that of the liftgate.

- Weight added behind the rear axle has the effect of unloading the front axle. The amount of this front axle load reduction is equal to the "extra" weight added to the rear axle.

- By positioning equipment behind the rear axle, the effective load on the rear axle is more than the weight of the equipment.

- The farther behind the rear axle the load is mounted, the greater the load on the rear axle. However, the combined weight, distributed to the front and rear axles (Lf plus Lr), does not exceed the weight of the liftgate.

In order to get a realistic curb weight, we add weight for a driver and fuel. For purposes of calculation, we use a standard of 200 lbs. (91 kg) for the driver. Of course, your driver weight will vary.
Using CGf = 10 in equations 1 and 2:

$Lr = \frac{CGf}{WB} \times L$	$\frac{10}{214} (200) = 9.34$ lbs (4.2 kg)
$Lf = L - Lr$	$200 - 9.34 = 190.6$ lbs (86.4 kg)

We calculate the fuel load using 7 lbs per gallon as the weight for diesel fuel.

45 gal x (7 lbs/gal) = 315 lbs (142.8 kg)

Using CGf=73.9 and equations 1 and 2 for the standard tank:

$Lr = \frac{CGf}{WB} \times L$	$\frac{73.9}{214} (315) = 108.7$ lbs (49.3 kg)
$Lf = L - Lr$	$315 - 108.7 = 206.2$ lbs (93.53 kg)

https://truckmanualshub.com/

Model K270/K370 sample, Assume that the payload is evenly distributed. Freight that is distributed evenly is referred to as a "water level" load. Our payload total is 14,500 lb. Since it is an evenly distributed "water level" load, its CG loca- tion will be the same as the CG location of the van body. See Figure B–5.

$$CGf = \frac{1}{2} BL + 72 \qquad \frac{1}{2}(168) + 72 = 156 \text{ in.}$$

Using CGf = 156 in equations 1 and 2:

$$Lr = \frac{CGf}{WB} \times L \qquad \frac{156}{214}(14{,}500) = 10{,}570 \text{ lbs } (4794.5 \text{ kg})$$

$$Lf = L - Lr \qquad 14{,}500 - 10{,}570 = 3{,}929.9 \text{ lbs } (1782.5 \text{ kg})$$

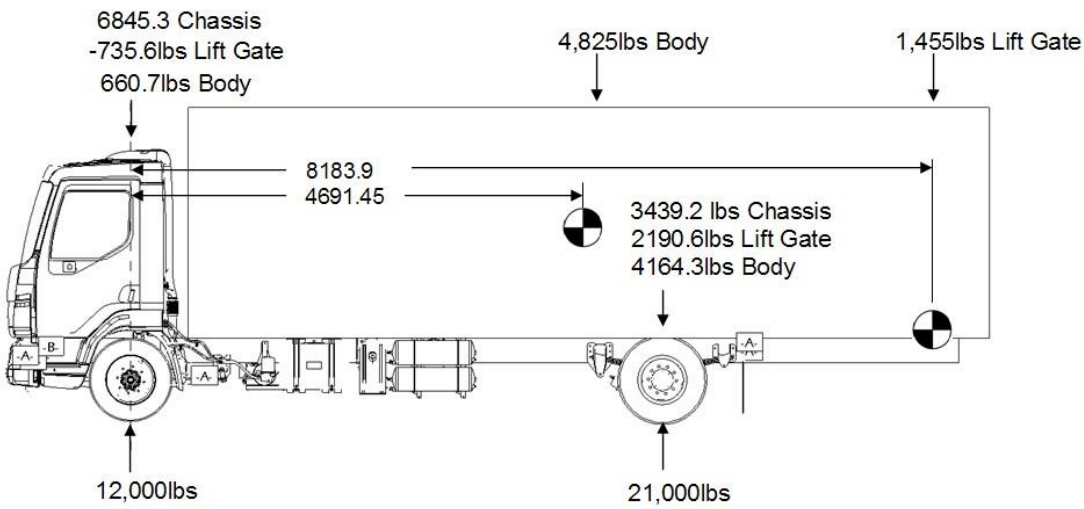

Figure B-5. Balanced Body Loaded: CGf 184.7 in (4691.45 mm) from front axle.

Item	Front Axle (FA) lb (kg)		Rear Axle (RA) lb (kg)		Total lb (kg)	
Chassis	6845.3	3104.98	3439.2	1559.995	10284.5	4664.971
Fuel 45 Gal Std, Tank	206.2	93.5307	108.7	49.30549	314.9	142.8362
Tare Weight	7051.5	3198.51	3547.9	1609.3	10599.4	4807.807
Liftgate	-735.6	-333.66	2490.6	1129.717	1755	796.0546
Van Body	660.7	299.688	4164.3	1888.895	4825	2188.583
Driver	190.65	86.4774	9.34	4.236553	199.99	90.71394
Curb Weight	7167.25	3251.01	10212.14	4632.149	17379.39	7883.159
Payload	3929.9	1782.57	10570	4794.471	14499.9	6577.044
Total Ground Weight	11097.15	5033.58	20782.14	9426.62	31879.29	14460.2
Chassis Axle Ratings	12000	5443.11	21000	9525.44	33000	14968.55

Table B-2 Model K270/K370 Weight Distribution and Chassis Rating Calculation (sample)

https://truckmanualshub.com/

Weight Distribution Analysis

Step 3. The final step is to total all of the front and rear axle weights to ensure that the axles are not overloaded. Table B-4 shows the assembled information in an easy to read format.

- Compare the calculated axle ground totals against the axle weight ratings to be sure that the truck is properly specified to haul this load.
- From this, it is evident that the chassis is properly equipped for this job.

These calculations illustrate the importance of doing the weight distribution analysis. In some cases the addition of one component (for example, a liftgate) can produce a dramatic difference.

Body Length

Step 4. Your analysis may produce results that indicate an overloaded axle with a total loaded chassis weight less than the GVW. This shows that you need to use a different body length for the truck. Each wheelbase can accommodate several different body lengths. However, for each wheelbase and GVW one particular body length will provide close to optimum weight distribution on both axles.

a. Table B-3 lists Recommended Body Lengths for a particular wheelbase and GVW. These body lengths provide the best weight distribution for the listed wheelbase.

Note: These charts were generated assuming a plain van body with "water level" loading. Any common additions such as lift gates or refrigeration units may indicate a different wheelbase for a given body length. Also, different body styles may require a different WB for a given size.

https://truckmanualshub.com/

Table B-3 Available Model K270/K370 Body Lengths

Wheelbase In. (mm)	Body Length (Ft)	
	26,000 GVW	33,000 GVW
142 (3606.8)	16	
146 (3708.4)		16
154 (3911.6)	17	
158 (4013.2)		17
166 (4216.4)	18	
170 (4318)		18
178 (4521)	18	
182 (4622.8)		20
190 (4826)	22	
194 (4927.6)		22
202 (5130.8)	24	
206 (5232.4)		24
214 (5435.6)	26	
218 (5537.2)		26
226 (5740.4)	27	
230 (5842)		27
238 (6045.2)	28	
242 (6146.8)		28
*For trucks built before and including 6/22/2012		

- Remember that water level loading assumes that the load is arranged evenly in the body (as water would be in a tank). If uneven load distribution is part of the vehicle layout, your weight distribution analysis may indicate that a different body length, deviating from the recommended length, will provide the best weight distribution.

Note: You should always perform a weight distribution analysis to help ensure the vehicle performs properly and meets your customer's expectations.

https://truckmanualshub.com/

Index

A
Abbreviations vi

B
Body mount, rear 5-9
Body mounting 5-1
Body mounting with U-bolts 5-7
Brackets, body mounting 5-5

C
Calculations B-2
Cautions 2-1
Certification label a-2
Chassis maintenance 1-1
Chassis Number A-1
Chassis weight B-4
Cab/Chassis Interface 7-3
Clearance, air lines and wiring 5-8
Critical clearances 5-4
Crossmember location 3-14
Crossmembers 6-2

D
Dimensions 3-1
Dimensions, air tanks 3-12
Dimensions, battery box 3-12
Dimensions, crew cab, conversion 3-11
Dimensions, overall 3-4

E
Electrical circuits 7-1
Emissions requirements 2-3
Engine serial number A-3

F
Federal Motor Vehicle Safety Standards 2-2
Final stage manufacturer 2-2
Fishplate bracket 5-9
Frame, drilling 5-7
Frame, welding 6-2
Front axle serial number A-4
Front View 3-7
Fuel tank locations 3-17

G
Ground clearance 3-8

I
Incomplete vehicle certification 2-2
Incomplete Vehicle Certification Label A-2

M
Mounting holes, frame 5-6

N
Noise Requirements 2-3
Notes 2-1

O
Operating information 1-1
Options weights B-4

R
Rear axle identification A-4
Rear suspension, changing 6-1
Rear View 3-7
Remote PTO/throttle harness 7-14
Repair information 1-1

S
Safety signals 2-1
Scope 1-1
Sill spacer 5-5
Spare Circuits 7-1
Step height 3-10

T
Transmission identification A-4
Turning radius 3-2

V
Vehicle Identification Number A-1

W
Warnings 2-1
Water level load B-9
Weight distribution B-1
Weight distribution analysis B-8
Wheelbase, changing 6-1

https://truckmanualshub.com/

KENWORTH

A PACCAR COMPANY

P.O. Box 1000
10630 NE 38th Place
Kirkland, WA 98033