https://truckmanualshub.com/

Operator's Manual

OSQ 126-192

OM-1201

IMPORTANT! Do not remove this manual from the lift truck.

JUN 2022 | REV 1.2

https://truckmanualshub.com/

https://truckmanualshub.com/

Vehicle Information

Vehicle Information:

Model No. _____

Serial No. _____

Customer ID No. _____

Unloaded Weight _____

Rated Capacity _____

Gross Weight _____

Component Serial Numbers:

Hydraulic Unit _____

Steer Motor _____

Drive Motor _____

Drive Unit _____

Traction Controller _____

IMPORTANT!
DO NOT expose this manual to hot water or steam.

© CLARK Material Handling Company 2020

https://truckmanualshub.com/

Contents of this Manual

Vehicle Information i

Contents of this Manual.....ii

Operator's Manual Overview iii

A Message to Operators iv

Introduction.....vi

How to Use this Manual viii

Safety Symbols and Messages x

Safety Standards xi

Section 1 General Safety Rules.....1.1

Section 2 Operating Hazards.....2.1

Section 3 Know Your Vehicle 3.1

Section 4 Operating Your Vehicle 4.1

Section 5 Daily Inspection 5.1

Section 6 Planned Maintenance.....6.1

Section 7 Storage and Towing 7.1

Section 8 Specifications 8.1

https://truckmanualshub.com/

YOU can prevent accidents

First: Learn safe operating rules and your company rules.

Next: Read your Operator's Manual. If you do not understand it, notify your supervisor for assistance.

Learn about the vehicle you operate.

Know YOUR vehicle

Then: Practice operating your vehicle safely.

And: Keep your vehicle in safe operating condition with correct and timely maintenance.

WARNING

If you DO NOT follow these rules, serious injury or death to yourself or others can occur.

https://truckmanualshub.com/

A Message to Operators

The CLARK OSQ is a mobile multipurpose elevated platform vehicle that is designed to efficiently pick and transport goods in the warehouse or storeroom, assist in overhead maintenance, and other related tasks. It is to be used indoors on clean, level surfaces only. Do not use on mezzanines or balcony areas.

Its function and operation is not like a car or ordinary vehicle. It requires specific instructions and rules for safe operation and maintenance.

The safe operation of this vehicle is of primary importance to CLARK. Our experience with vehicle accidents has shown that when accidents occur and people are injured or killed, the most common causes are:

- **An improperly trained operator**
- **An inexperienced operator, unfamiliar with vehicle operation**
- **Basic vehicle safety rules NOT being followed**
- **The vehicle NOT maintained to a safe operating condition**

For these reasons, CLARK wants you to know how to safely operate and properly maintain your OSQ.

This manual is designed to assist you in operating your vehicle safely. This manual shows and describes correct safety inspections and important general safety rules and hazards of vehicle operation. It shows and explains the special components and features of your specific vehicle and their functions. The correct operating procedures are shown and explained. Illustrations and important safety messages are included to provide a clear understanding. A specific section detailing proper maintenance and correct lubrication is included for the vehicle service technician.

This operator’s manual is not a training manual. It is a guide to help trained and authorized operators safely operate their vehicle by emphasizing and illustrating the correct procedures. This manual cannot cover every possible situation that could result in an accident. You must be aware of possible hazards in your specific work area and make sure to correct or avoid them.

It is important that you know and understand the information in this manual and that you understand and follow your company's safety rules. Make sure that your vehicle is maintained to a safe, working condition. Do not operate a damaged or malfunctioning vehicle. Practice safe operation every time you use your vehicle.

https://truckmanualshub.com/

Let's join together to set high standards in safety!

Remember, that before you begin operating this vehicle, make sure you understand all correct driving procedures. It is your responsibility to operate the vehicle safely and efficiently.

Be aware that the Federal Occupational Safety and Health Act (OSHA) and state law, requires operators to be trained and certified in the safe operation of material handling vehicles. It is an OSHA requirement that an inspection of the vehicle be performed prior to every shift. If you have not been certified (or require recertification training) to operate or inspect your vehicle, notify your supervisor.

CLARK vehicles are designed and built to handle hard work, but not abuse from the operator. They are built to be dependable, but are only as safe and efficient as the operator(s) and person(s) responsible for maintaining them.

Do not make any repairs to this vehicle unless you have been properly trained and authorized to perform safe vehicle repair.

For any repair, maintenance, or any other service work concerning your vehicle, please contact your CLARK dealer.

Only use CLARK original spare parts to guarantee trouble free functionality and optimum performance of your vehicle.

https://truckmanualshub.com/

Introduction

Foreword

CLARK welcomes you to the growing group of professionals who own, operate, and maintain CLARK vehicles. We take pride in the long tradition of quality products and superior value the CLARK name represents. This manual will familiarize you with the safety, operation, and maintenance information concerning your new CLARK OSQ. It has been specially prepared to help you use and maintain your CLARK vehicle in a safe and correct manner.

Your CLARK OSQ has been designed and built to be as safe and efficient as today's technology can make it. As manufactured, it meets all the applicable mandatory design and construction requirements of the **ANSI / SAIA A92.6 - 2006 (R2014) American National Standard for Self-Propelled Elevating Work Platforms**.

Safe and productive operation of your vehicle requires both skill and knowledge on the part of the operator. The operator must know, understand, and practice the safety rules and safe driving and load handling techniques described in this manual. To develop the skills required, the operator must become familiar with the construction and features of the vehicle and how they function. The operator must understand its capabilities and limitations, and ensure that it is maintained to a safe working condition.

Routine Servicing and Maintenance

Regular maintenance and care of your vehicle is not only important for economy and utilization reasons; it is essential for your safety. A faulty vehicle is a potential source of danger to the operator, and other personnel working near it. As with all quality equipment, keep your vehicle in optimal operating condition by following the recommended schedule of Planned Maintenance.

https://truckmanualshub.com/

Operator Daily Inspection — Safety and Operating Checks

Your vehicle should always be examined by the operator, prior to driving, to make sure it is safe to operate. The importance of this procedure is described in this manual with a brief illustrated review and later with more detailed instructions. Your CLARK dealer can supply you with copies of a helpful **Operator's Daily Checklist.**

Planned Maintenance

In addition to the *Daily Inspection*, CLARK recommends that a *Planned Maintenance* (PM) and safety inspection program be performed by a trained and authorized mechanic on a regular basis. This PM will provide an opportunity to make a thorough inspection of the safety and operating condition of your vehicle. Necessary adjustments and repairs can be done during the PM, which will increase the life of components and reduce unscheduled downtime (increased productivity) and increase safety. The PM can be scheduled through your CLARK dealer to meet your particular application and vehicle usage.

The procedure for a periodic Planned Maintenance program covers inspections, operational checks, cleaning, lubrication, and minor adjustments. These are outlined in this manual. Your CLARK dealer is prepared to help you with a *Planned Maintenance* program by offering trained service personnel who know your vehicle and can keep it operating safely and efficiently.

https://truckmanualshub.com/

How to Use this Manual

This manual contains essential information about the safe operation, features and functions, and maintenance of your vehicle.

This manual is organized into eight sections:

Section 1 General Safety Rules - reviews and illustrates accepted practices for safe operation of the vehicle.

Section 2 Operating Hazards - warns of conditions that could cause damage to the vehicle or injury to the operator or other personnel.

Section 3 Know Your Vehicle - describes the most common operating components, systems, controls, and other features of your vehicle and how they function.

Section 4 Operating Your Vehicle - discusses more specific instruction on the safe and efficient operation of your vehicle.

Section 5 Daily Inspection - details how to perform the operator's daily safety inspection of the vehicle.

Section 6 Planned Maintenance - describes the proper planned maintenance (PM) program.

Section 7 Storage and Towing - includes information on the proper methods to transport and store the vehicle when not in use.

Section 8 Specifications - provides reference information and data on features, components, and maintenance items.

NOTICE: The descriptions and specifications included in this manual were current at the time of printing. CLARK Material Handling Company reserves the right to make improvements and changes in specifications and/or design, without notice and without incurring obligation.

The examples, illustrations, and explanations in this manual should help you improve your skill and knowledge as a professional operator and take full advantage of the capabilities and safety features of your new vehicle.

Please check with your authorized CLARK dealer for information on possible updates or revisions.

https://truckmanualshub.com/

The first section of this manual is devoted to a review, with illustrations and brief messages, of general safety rules and the major operating hazards you may encounter while operating a vehicle. Next, you will find descriptions of the components of your specific vehicle model and how the instruments, gauges, and controls operate. Then, you will find a discussion of safe and efficient operating procedures, followed by instructions on how to tow a disabled vehicle. The later sections of the manual are devoted to maintenance and vehicle specifications.

Take time to carefully read the *Know Your Vehicle* section. By acquiring a good basic understanding of your vehicle's features, and how they function, you are better prepared to operate it both safely and efficiently.

In *Planned Maintenance*, you will find essential information about the correct servicing and periodic maintenance of your vehicle, including recommended maintenance intervals and component capacities. Carefully follow these instructions and procedures.

We recommend to carefully read the entire manual before operating your vehicle. Be sure to read and understand the information on the *General Safety Rules* and *Operating Hazards*. Familiarize yourself with the various procedures in this manual. Understand how all the gauges, indicator lights, and controls function. Please contact your authorized CLARK dealer about any questions you may have about your vehicle’s features, operation, or manuals.

Operate your vehicle safely; careful driving is your responsibility. Drive defensively and think about the safety of other personnel who are working nearby. Know your vehicle’s capabilities and limitations. Follow all instructions in this manual, including all IMPORTANT, CAUTION, WARNING, and DANGER messages to avoid damage to your vehicle and to avoid any harm to yourself or others.

It is an OHSA requirement that this Operator's Manual and the Manual of Responsibilities be permanently attached to your vehicle. Keep these on the vehicle as a reference for anyone who may operate or service it. If the vehicle you operate is not equipped with either of these manuals, inform your supervisor to obtain a replacement to be reinstalled to the vehicle.

Remember, your CLARK dealer is happy to answer any questions about the operation and maintenance of your vehicle and to provide you with any additional information should you request it.

https://truckmanualshub.com/

Safety Symbols and Messages

Improper operation can cause accidents. Do not operate improperly setup or damaged equipment. **Read and understand** all the procedures for safe driving and maintenance described in this manual. Do not hesitate to ask for assistance. **Stay alert and follow** all safety rules, regulations, and procedures. Avoid accidents by recognizing and avoiding dangerous procedures or situations before they occur. **Drive and work safely** and follow the safety symbols and their messages on the vehicle and in this manual.

Safety symbols and messages are described in this manual and located on the vehicle to identify specific areas where potential hazards exist and provide instructions or special precautions that should be taken. Know and understand the meaning of these instructions, symbols, and messages. Damage to the vehicle, serious injury, or death to you or other persons may result if these messages are not followed.

NOTE

This message is used when special information or instruction is needed relating to procedures, equipment, tools, specifications or other special data.

IMPORTANT!

This message is used when special precautions or action should be taken to avoid damage to the vehicle or one of it's components.

CAUTION

Indicates a potentially hazardous situation which, if not avoided, may result in injury. It may also be used to alert against unsafe practices.

WARNING

Indicates a potentially hazardous situation which, if not avoided, could result in serious injury or death.

DANGER

Indicates an imminently hazardous situation which, if not avoided, will result in serious injury or death.

https://truckmanualshub.com/

IMPORTANT!

Your CLARK vehicle has been built to meet all applicable mandatory design and construction requirements of **ANSI / SAIA A92.6 - 2006 (R2014) American National Standard for Self-Propelled Elevating Work Platforms**. No additions, omissions, or modifications should be made to the vehicle that affect compliance to the above requirements or in any way minimize the effectiveness of the safety devices.

IMPORTANT!

You should be familiar with the additional operating and maintenance safety instructions contained in the following publications:

ANSI / SAIA A92.6: American National Standard for Self-Propelled Elevating Work Platforms (MEWPs). Available from: ANSI Headquarters, 1899 L Street NW 11th Floor, Washington, DC 20036.

NFPA 505: Fire Safety Standard for Powered Industrial Vehicles: Type Designations, Areas of Use, Maintenance and Operation. Available from: National Fire Protection Association, Inc., 1 Batterymarch Park, Quincy, MA 02169.

https://truckmanualshub.com/

https://truckmanualshub.com/

Contents

Daily Inspection 1.2
Do's and Don'ts 1.3
No Riders 1.4
No Lifting Personnel 1.5
Travel and Grades 1.6
Watch for Pedestrians 1.7
No Climbing 1.8
Platform Safety 1.9
Safe Parking 1.10
Pinch Points 1.11

https://truckmanualshub.com/

Daily Inspection

Check	OK	NR	Explanation
Transmission and Hydraulic Units			
Pick and Rear Trays			
Lift Chains, Wiring Harness, Hoses			
Control Arms and Side Gates			
Safety Decals and Data Plate			
Horn and Flashing Light(s)			
Steering Operation			
Travel Controls			
Wheels (drive, load, caster, etc.)			
Hydraulic Controls (lift/lower)			
Emergency Stop Switch (parking brake)			
Battery Disconnect			
High Speed Limiting Function			
Platform Operation			

Prior to beginning your shift:

- Complete a Daily Inspection sheet.
- Check for damage and maintenance issues, report any noted problems.
- Make sure that repairs are complete before you operate the vehicle.

CAUTION

Do not attempt to make repairs yourself. CLARK certified mechanics are trained professionals who know how to make repairs safely.

https://truckmanualshub.com/

Do's and Don'ts

Don't use drugs or alcohol during operation.

Do watch for pedestrians.

Don't block safety or emergency equipment.

Do wear safety equipment when required.

Don't smoke in NO SMOKING areas.

https://truckmanualshub.com/

No Riders

WARNING

Never attempt to carry passengers on your vehicle. The operator must be the only rider when operating the vehicle.

https://truckmanualshub.com/

No Lifting Personnel

WARNING

Do NOT use the vehicle to raise personnel for overhead work.

https://truckmanualshub.com/

Travel and Grades

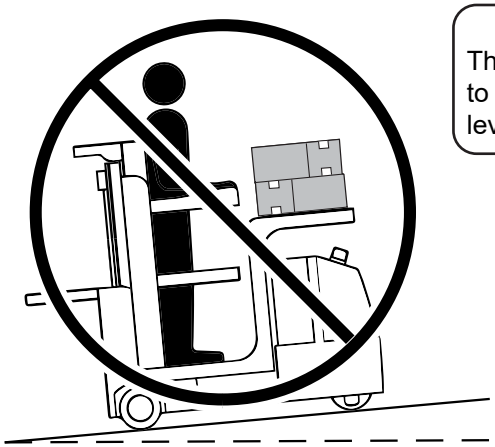

IMPORTANT!
The OSQ is designed to operate indoors, on level surfaces only.

CAUTION

- Never operate the CLARK OSQ on a grade or slope.
- Always fully lower the operator platform before traveling.
- Identify and avoid all holes, drop-offs, bumps, and other obstructions while operating the vehicle.

NOTE
The CLARK OSQ is equipped with a level sensor that sounds an alarm when the platform is elevated and the vehicle is being operated on a slope of 5.0° or greater.

https://truckmanualshub.com/

Watch for Pedestrians

IMPORTANT!

- Watch where you are going.
- Look in the direction of travel.
- Pedestrians may use the same roadway you do.
- Sound the horn at all intersections or blind spots.
- Always watch for people in your work area.

https://truckmanualshub.com/

No Climbing

WARNING

Do not allow anyone to climb on the upright or any other part of the vehicle.

Do not climb down from the operator platform.

If the vehicle loses power while the upright is extended, call for assistance and use the manual lowering valve to lower the platform.

https://truckmanualshub.com/

Platform Safety

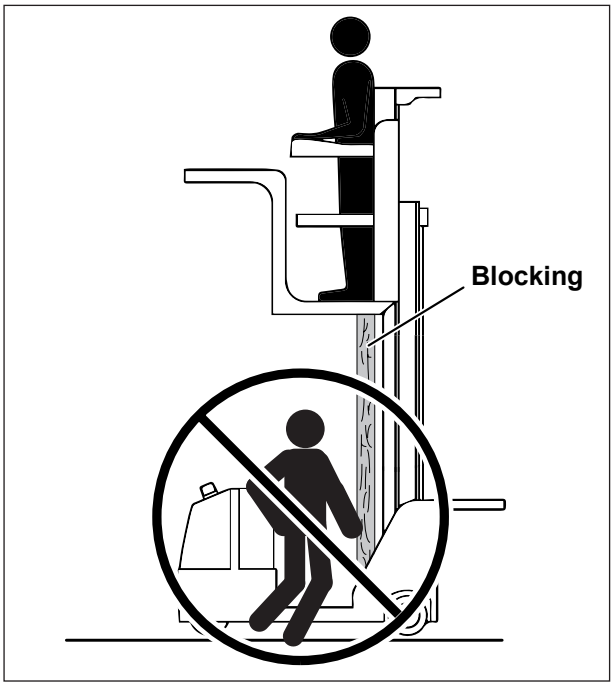

WARNING

While servicing the vehicle, install hardwood blocking to prevent the operator platform from falling or accidentally lowering.

WARNING

Do not allow anyone to walk or work under the operator platform while in the raised position. Possible serious injury or death could occur due to crushing injury when raising or lowering the platform.

https://truckmanualshub.com/

Safe Parking

How to Safely Park Your Vehicle:

- Lower the operator platform to the floor.
- Pull the emergency brake switch UP.
- Turn the key switch to OFF and remove key.
- Raise the control arms and safety gates and exit the vehicle.
- Unplug the battery connector.

CAUTION

Do not obstruct traffic lanes or aisles. Park the vehicle in a designated area only.

https://truckmanualshub.com/

Pinch Points

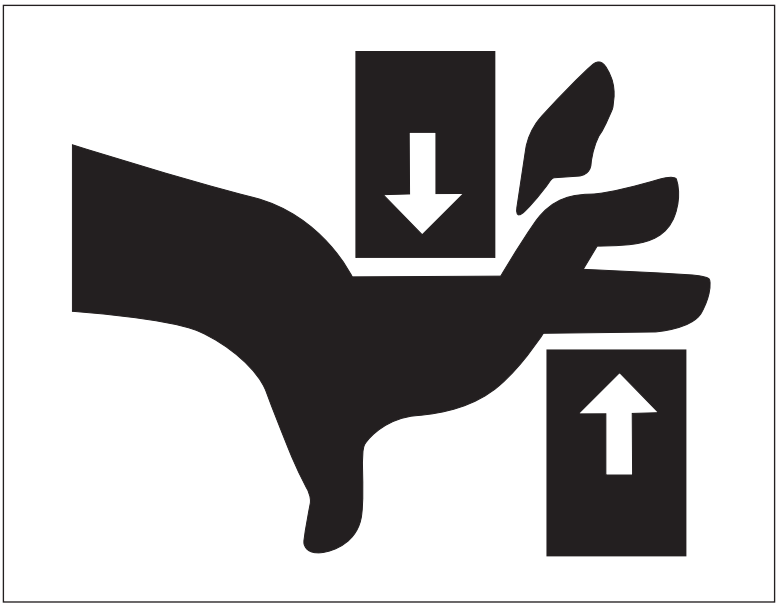

WARNING

Keep hands, feet and legs out of the upright.

https://truckmanualshub.com/

https://truckmanualshub.com/

Contents

Fast Turns 2.2

Corners 2.3

Loose Loads 2.4

Falling Objects 2.5

Overhead Clearance 2.6

Debris on the Floor 2.7

Transporting Loads 2.8

Tether and Safety Harness 2.9

WARNING

This section describes some of the most common hazardous situations associated with the operation of your vehicle. The work area where you operate your vehicle may have hazards not described in this manual. Be alert to any situation that could result in serious injury and possible death.

https://truckmanualshub.com/

Fast Turns

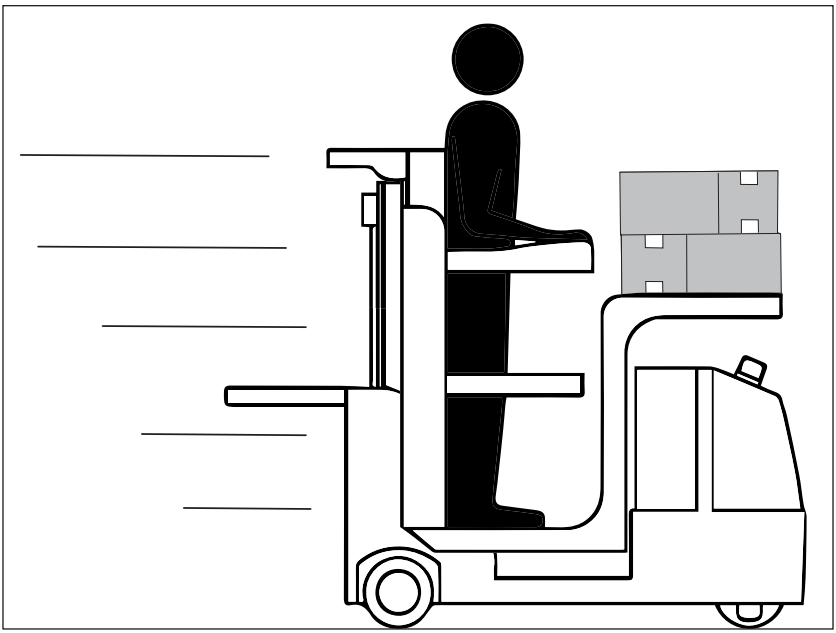

WARNING

Slow down when making a turn. An empty vehicle can tip over more easily than a vehicle with a load.

https://truckmanualshub.com/

Corners

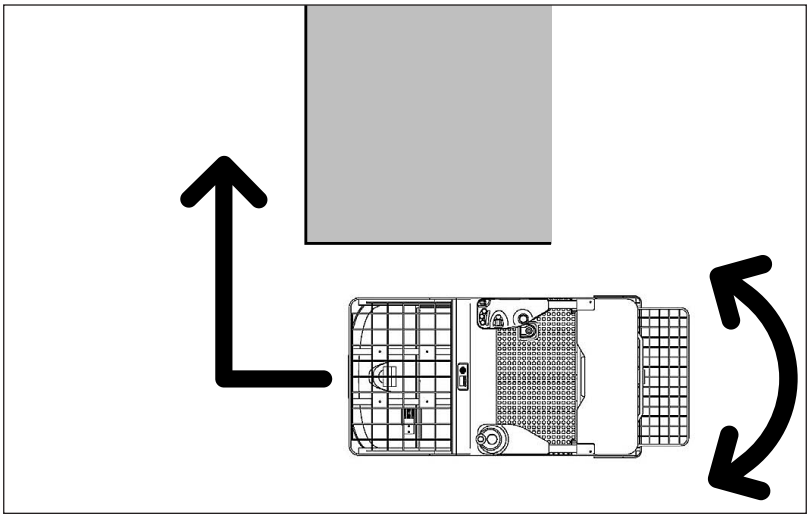

WARNING

Always use caution when turning into an aisle. Be aware of the vehicles rear "tail-swing" when traveling around corners to avoid collisions.

https://truckmanualshub.com/

Loose Loads

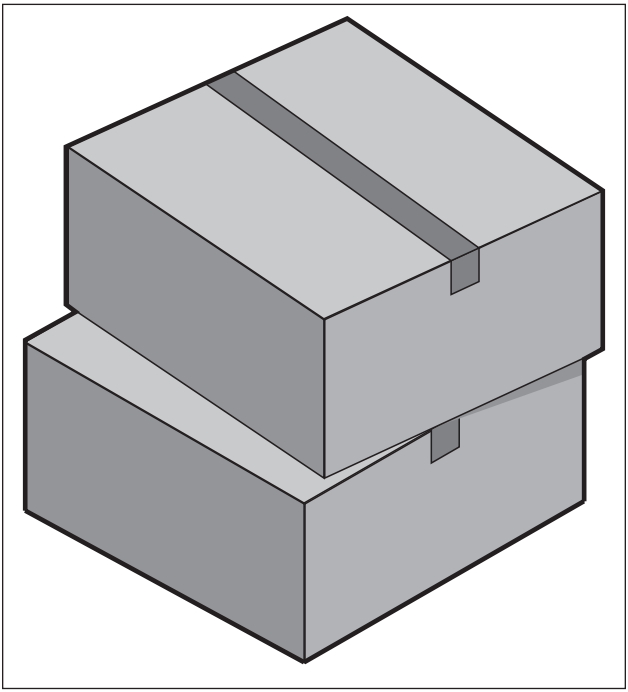

WARNING

Loose or unbalanced loads are dangerous and can fall. Falling loads can cause serious injury to yourself or others.

- Never carry loose or uneven material.
- Stack loose material evenly and secure to the front tray.
- Center all loads.

https://truckmanualshub.com/

Falling Objects

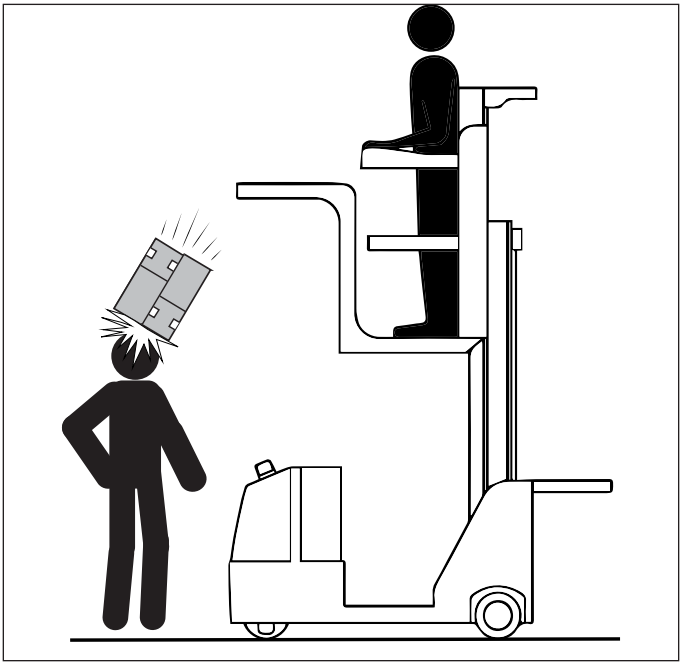

WARNING

Always carry a load in the lowered position to prevent injury to any bystanders due to falling tools or loads.

CAUTION

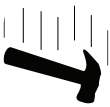

Use care to prevent falling tools or loads:

- Always look for other personnel in your work area.
- Make people stand back, even when you are parked.
- Secure loads to the front tray.

https://truckmanualshub.com/

Overhead Clearance

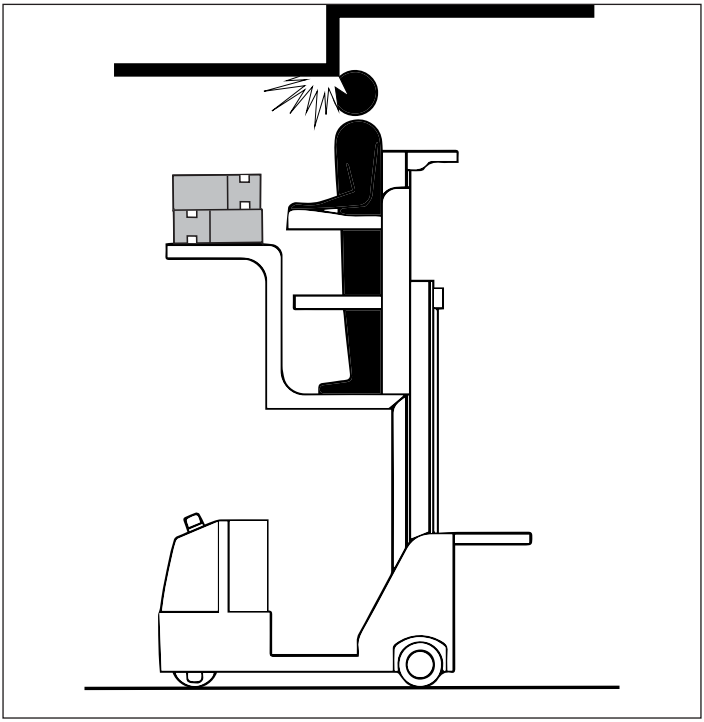

WARNING

Use care when raising or lowering the operator platform when operating the vehicle near low ceilings or other overhead obstructions.

Know the height of your vehicle and always be aware of your clearances.

Keep your head and body clear of obstructions while operating the vehicle to avoid possible operator injury.

https://truckmanualshub.com/

Debris on the Floor

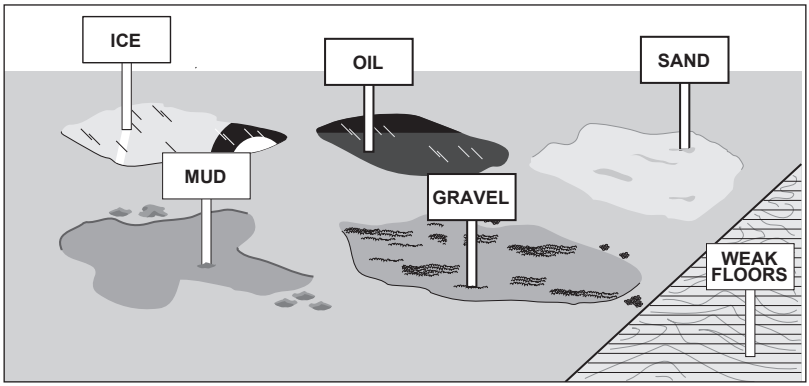

WARNING

Oil, ice, sand, mud, wood, gravel and other materials can cause the floor to become dangerous to operate on. Use care and avoid crossing these hazards.

WARNING

Know the weight of your vehicle and the load, DO NOT overload.

IMPORTANT!

Operate your vehicle indoors and on firm, level surfaces only.

https://truckmanualshub.com/

Transporting Loads

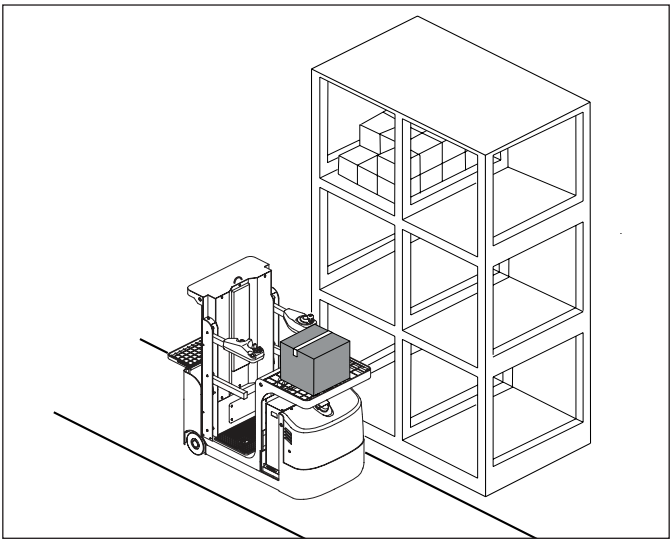

IMPORTANT!
The maximum combined lifting capacity is 1000 lb when operating below 126".

WARNING
Before placing a load, the driver must ensure that the storage location is suitable for the storing the load (correct size and capacity.

CAUTION

- Always transport loads with the platform fully lowered.
- Always transport loads using the pick tray.
- When loaded, gradually accelerate the vehicle.
- Travel at a constant speed.
- Only stop suddenly during an emergency situation.
- Reduce speed in confined spaces or narrow bends.

https://truckmanualshub.com/

Tether and Safety Harness

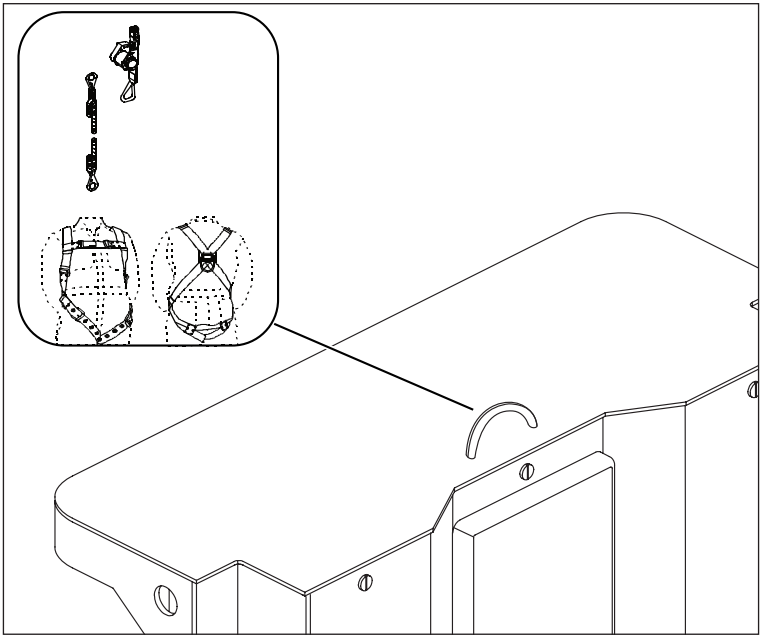

WARNING

- If performing a task at a height greater than approximately 22" (56 cm) and with the safety gate(s) raised, CLARK requires the operator to use a tether and safety harness.
- Wear and adjust the safety harness according to the manufacturers instructions.
- Ensure the ends of the tether are correctly attached to both the vehicle anchor point and the safety harness.
- Check the tether and safety harness for damage before beginning operation. Do not use if worn or damaged, replace immediately.

https://truckmanualshub.com/

https://truckmanualshub.com/

Contents

System Descriptions 3.2

Vehicle Components 3.4

Operator Controls.....3.6

Display 3.8

Screen.....3.10

Data Plate 3.12

Warning Decals.....3.13

https://truckmanualshub.com/

System Descriptions

General Vehicle

The CLARK OSQ is designed to pick and transport goods indoors, on smooth and level surfaces only. Loads can be stacked, unstacked and transported over long distances.

Chassis / Upright

- Heavy duty I-beam design, 3-stage upright
- Maximum lift heights: 126" (320 cm), 162" (411 cm), and 192" (487 cm).
- Total vehicle weight: 2268 lb (1028 kg) to 3160 lb (1434 kg).
- Travel speed is variable (dependent upon platform height) up to 5.5 km/h (3.4 mph), optional high speed option of 8.0 km/h (5.0 mph).
- 1000 lb (453 kg) total lifting capacity.
- 500 lb (226 kg) front pick tray capacity.
- 300 lb (136 kg) operator weight capacity.
- 200 lb (90 kg) hideaway rear tray capacity.

Controls

- Electronic power steering.
- Infinitely variable travel speed control, allows for brake "plugging".
- Fingertip lift and tilt controls.
- Two driving modes (HIGH and LOW) and four speed modes (Level 1-4).
- Horn button and emergency stop switch intuitively located.
- 180° steering for maneuverability.

Drive Unit

- Heavy duty drive unit with double reduction helical spur and spiral bevel gears.
- Totally enclosed drive unit with lubricating oil bath.
- Vertical mount drive motor for easy service accessibility.

https://truckmanualshub.com/

Brake

- Electromagnetic (EM-type) brake.
- Regenerative braking applied during reduced travel speeds.
- Easy service accessibility.

Battery / Electrical

- 24-volt Zapi AC-0 traction controller.
- 24-volt EPS AC-0 steering controller.
- Electrical System: UL 583-listed, type "E".
- Inverter type control features cool and quiet operation.
- Absorbed glass mat (AGM) battery, industrial battery optional (required for 192" lift height vehicles).

Hydraulic System

- Integrated motor-pump-reservoir assembly features a control valve and pressure relief valve for controlled lowering and system overload protection.
- Closed system reduces contamination.
- Side mounted lift cylinders to allow for increase lifting stability.

Wheels / Tires

- Five lug drive wheel mounting for simple replacement.
- 9" x 3" polyurethane drive tire.
- 8" x 3" polyurethane load wheels.
- 3" x 2" stability caster wheels. Spring-loaded and adjustable.

Standard Equipment

- ZAPI LCD dash display, horn, front and rear flashing lights, key switch, 24-volt electrical system, 110V power adapter, hideaway rear tray, battery compartment rollers, operator comfort pad.

Optional Equipment

- Optional equipment includes: rear tow hitch, tether and safety harness, industrial battery with external charger, blue safety lights, 280 Ah industrial lead-acid battery with external charger.

https://truckmanualshub.com/

Vehicle Components

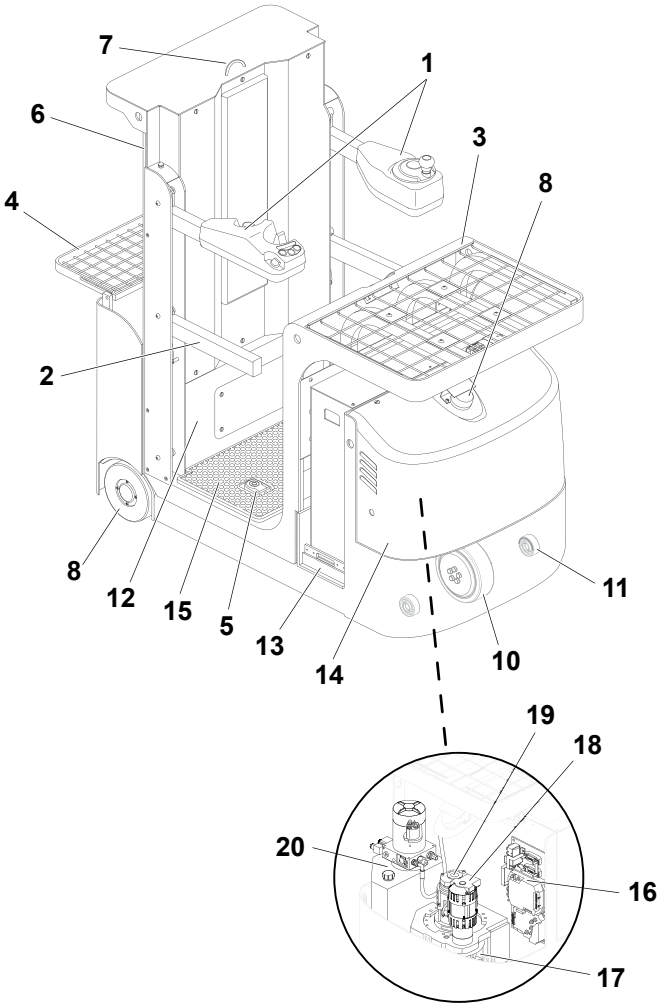

https://truckmanualshub.com/

Item	Component
1	Control Arms
2	Safety Gates
3	Front Tray
4	Rear Tray
5	Foot Switch
6	Upright
7	Tether Anchor
8	Warning Light
9	Load Wheels
10	Drive Wheel
11	Caster Wheels
12	Operator Platform
13	Battery Holder
14	Front Cover
15	Operator Mat
16	Controllers
17	Drive Unit
18	Steer Motor
19	Drive Motor
20	Hydraulic Unit

https://truckmanualshub.com/

Operator Controls

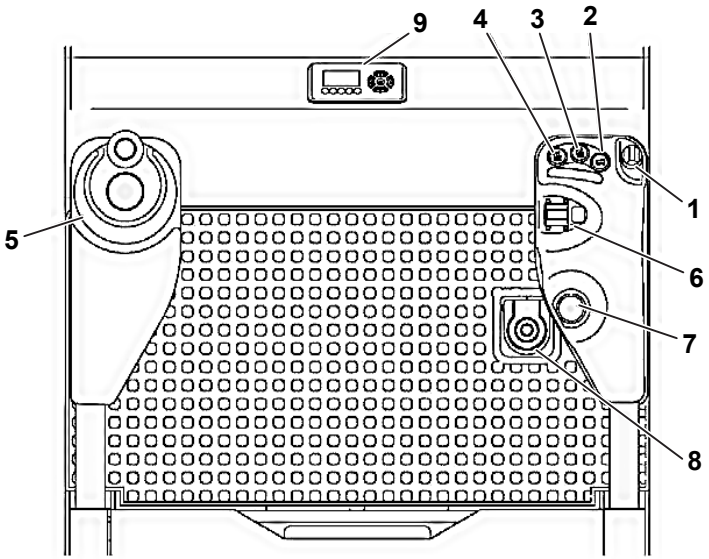

Item	Component
1	Key Switch
2	Horn Button
3	Lower Button
4	Lift Button
5	Steering Tiller
6	Travel Switch
7	Emergency Stop Switch
8	Foot Switch
9	Dash Display

https://truckmanualshub.com/

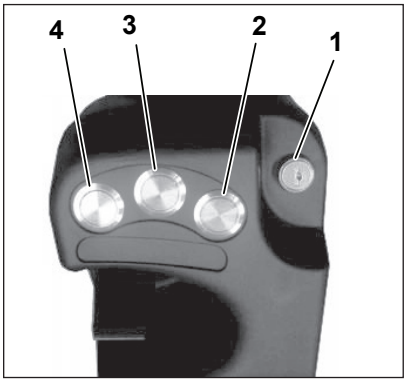

(1) Key Switch:

Turns the vehicle controls ON or OFF.

(2) Horn Button:

Activates the horn.

(3) Lower Button:

Lowers the operator platform.

(4) Lift Button:

Lifts the operator platform.

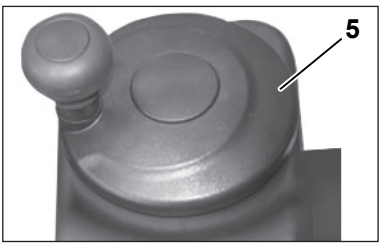

(5) Steering Tiller:

Steers the vehicle in the desired direction.

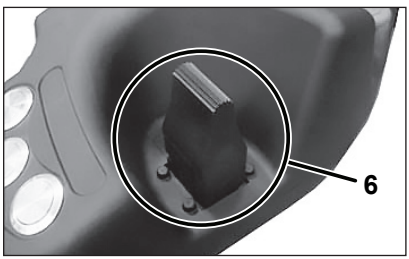

(6) Travel Switch:

Selects the desired travel direction (forward and reverse).

(7) Emergency Stop Switch:

Shuts vehicle power OFF and activates the emergency / parking brake.

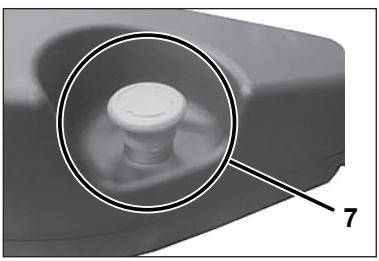

https://truckmanualshub.com/

Display

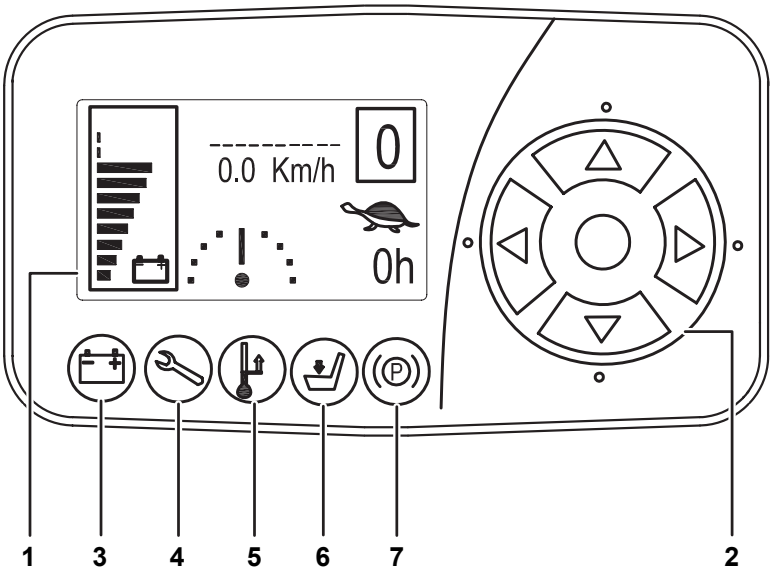

Item	Component
1	Screen
2	Keypad
3	Low Battery
4	Fault Alarm
5	Temperature Alarm
6	Operator Presence
7	Emergency Brake

https://truckmanualshub.com/

(2) Function Keypad:

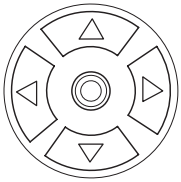

Use the LEFT button to change the Speed Mode. Use the DOWN button to select the Driving Mode.

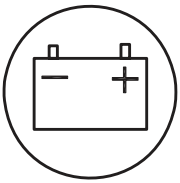

(3) Low Battery Alarm:

Activates when the nominal battery voltage is too low. Replace with a fully charged battery or charge the battery to prevent the battery from over-discharging.

(4) Fault Alarm:

Activates when a fault condition occurs. The fault lamp will illuminate and the specific fault code will be displayed on the screen.

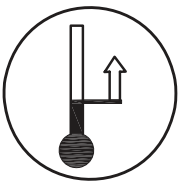

(5) Temperature Alarm:

Activates when the temperature of the drive or steering motor is too high. The lamp will illuminate and a fault code will be displayed. Stop operation of the vehicle to prevent damage to the motor(s).

(6) Foot Switch Alarm:

Activates when the foot switch is NOT engaged. The foot pedal lamp will illuminate and the vehicle will not operate until the switch is activated.

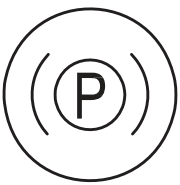

(7) Parking Brake Alarm:

Activates when the emergency / park brake is engaged. The fault lamp will illuminate and the vehicle will immediately stop operation.

https://truckmanualshub.com/

Screen

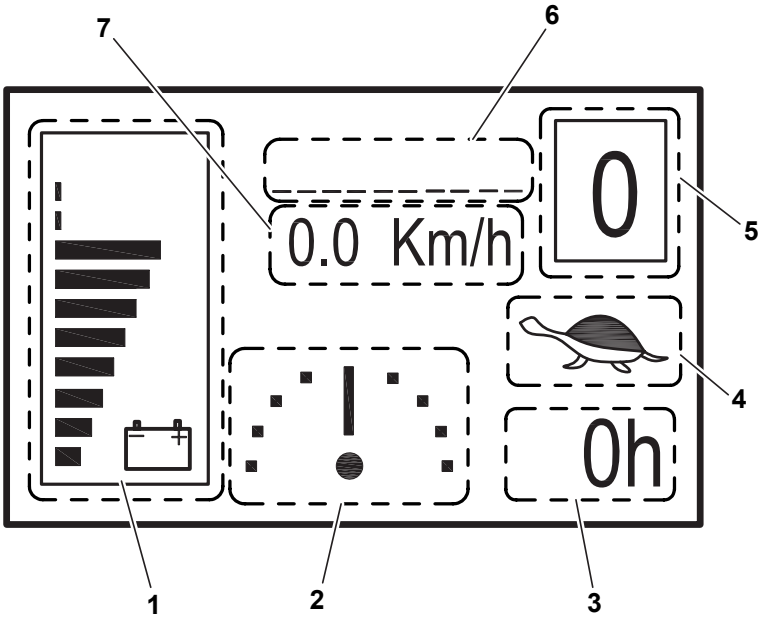

Item	Component
1	Battery Discharge
2	Steer Direction
3	Driving Mode (High Speed)
4	Driving Mode (Low Speed)
5	Speed Mode
6	Vehicle Information
7	Travel Speed

https://truckmanualshub.com/

(1) Battery Discharge

Displays the level of charge remaining in the battery. Each bar represents 10% of total battery charge. EXAMPLE: the image shows an 80% charge level.

(2) Steer Direction

Displays the current direction that the drive (steer) wheel is pointed. The drive wheel has a 180° travel radius.

(3) and (4) Driving Modes

Displays either HIGH or LOW (turtle) speed mode. The vehicle remains in HIGH speed mode unless the operator platform is raised approximately 22 inches (56 cm) or higher.

(5) Speed Mode

Displays the four speed ranges that are available in both HIGH and LOW (turtle) Driving Modes. Mode 1 indicates the slowest speed and Mode 4 indicates the highest speed.

(6) Vehicle Information

Displays vehicle warnings and faults. Report any warnings or faults immediately to your supervisor or a qualified service technician.

(7) Travel Speed

Displays the actual vehicle speed in either miles per hour or kilometers per hour.

https://truckmanualshub.com/

Data Plate

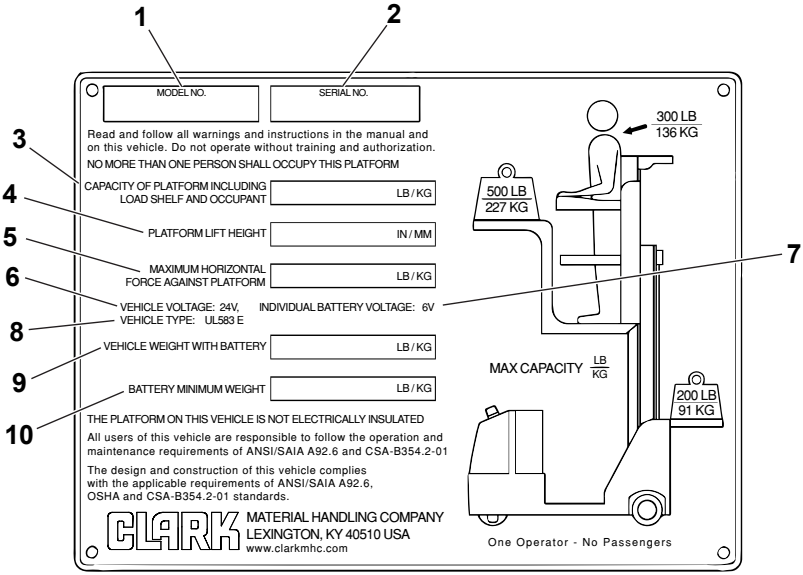

Know The Information On The Data Plate

1. Vehicle Model
2. Vehicle Serial Number
3. Total Platform Capacity
4. Platform Lift Height
5. Vehicle Capacity
6. Vehicle Voltage
7. Battery Voltage
8. UL Protection
9. Vehicle Weight
10. Battery Weight

IMPORTANT!

Anytime the vehicle is modified or attachments are added, the data plate must be updated accordingly. Contact your authorized CLARK dealer and request a new data plate that shows the current configuration.

https://truckmanualshub.com/

Warning Decals

The following are examples of decals which give important information about operation and safety. OSHA and ANSI mandate that any missing or unreadable safety decals must be replaced. Become familiar with the decals on your vehicle and follow the instructions they describe. If you do not understand, ask your supervisor for assistance.

Operator Safety Warning Decal

The operator's warning decal describes basic instructions for the safe operation of a vehicle. Read and understand these instructions and the other safety messages in this manual and on the vehicle.

⚠ WARNING

Do not operate this vehicle unless you have been authorized and trained to do so, and have read all warnings and instructions in the Operator's Manual and on this vehicle. Read, understand and apply the information on the vehicle's nameplate at all times.

Do not operate this vehicle until you have inspected it's condition. Give special attention to tires, horn, battery, controller, lift and hydraulic systems, brakes, steering mechanism and guards. Verify that all emergency controls, personal protection and safety devices are in place and functioning correctly and ensure the vehicle is free of fluid leaks and has no loose or missing parts. Report any problems to the designated authority and do not use the vehicle until they are corrected by a qualified mechanic.

This vehicle must not be modified without the manufacturer's consent. Components critical to the vehicle's stability such as batteries shall not be replaced with lighter weight components.

Operate vehicle only from designated platform operating position. Use this vehicle indoors and on level surfaces only.
Avoid all ramps and slopes.
Before operating, inspect the floor area it will be used on and be certain it will support the vehicle at full capacity and lift height. Identify and avoid holes, drop-offs, bumps and obstructions.

Before and during all vehicle operations ensure that adequate clearance is maintained from overhead obstructions and energized electrical conductors and parts.

Before elevating platform be sure guardrail access gates are in place and lowered. Keep feet on platform floor at all times while using vehicle, avoid climbing onto guard rails or platform shelf. Do not use ladders, planks or other devices to achieve additional height on platform.

When transferring loads to platform or platform shelf, do not exceed capacity ratings on vehicle nameplate. Ensure loads are centered and do not contact obstructions in the vehicle's vicinity. Do not stabilize the platform by contact with adjacent objects such as racks or shelving. Do not use the platform as a crane.

Take care to prevent electric cords, hoses or other equipment from entangling in platform. Ensure area surrounding the vehicle is free of personnel and equipment before lowering platform.

Maintain a clear view of the ground while traveling and a safe distance from obstacles in the vehicle or platform's path. Ensure personnel in the vicinity are aware of the vehicle's movement. Travel at a safe speed for the conditions the vehicle is operating in.

Observe applicable traffic regulations. Yield right of way to pedestrians. Slow down and sound horn at cross aisles and wherever vision is obscured. Avoid hazardous locations.

Enter and exit platform only through raised access gates and with platform fully lowered and vehicle stopped. When leaving vehicle unattended, remove key to prevent unauthorized use.

https://truckmanualshub.com/

Falling Objects Decal

This safety decal is to warn of the danger by falling objects from an elevated platform position. Always use care when picking or transporting objects during use.

Operator Platform Decal

This decal is to warn of the danger of an impact or crushing injury from lowering the platform. The operator must always check that no on is under the operator's platform when lowering and to block the upright when servicing the vehicle.

Operating Decal

This decal is to warn the operator that this vehicle was designed and intended for operation on indoor, level surfaces only.

Electrical Hazard Decal

This decal is to inform the operator of the dangers of contacting electrical wires or other electrical components due to the vehicle's platform not being insulated. Use extra care when operating around these devices.

https://truckmanualshub.com/

https://truckmanualshub.com/

https://truckmanualshub.com/

Contents

Beginning Operation 4.2

Travel Control 4.3

Braking 4.4

Lifting and Lowering 4.5

Load Handling..... 4.6

Emergency Lowering 4.8

Storing Rear Tray..... 4.8

Parking 4.9

https://truckmanualshub.com/

Beginning Operation

Before Operating:

- Visually inspect the entire vehicle for any obvious damage.
- Check that the safety lights and horn, function properly.
- Check for proper service brake operation.
- Remove the wheel chocks, if installed.
- Connect the battery connector.

IMPORTANT!

CLARK recommends operating the vehicle under light load conditions for the first 100 hours of operation.

- Avoid sudden stops, starts, or turns.
- Check initial fluid change intervals (located in this manual).
- Limit loads to approximately 75% of rated loads.
- Do not allow battery to drop below 20% remaining charge.
- Perform all preventative maintenance services as required.

Starting the Vehicle:

1. Attach your safety harness to the tether, if equipped (NOT SHOWN).
2. Lower the control arms and safety gates.
3. Depress the foot switch (A).
4. Insert the key (B) and turn to the ON position.
5. Pull up on the emergency stop switch (C).
6. Apply the travel switch (D).

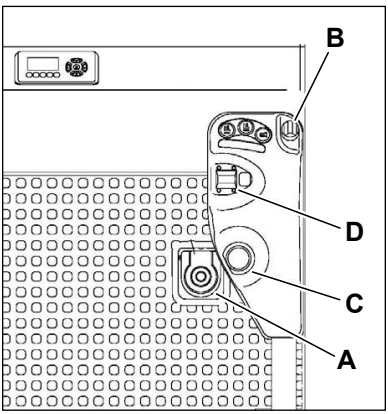

https://truckmanualshub.com/

Travel Control

Steering

Rotate the steering tiller (E) control (as shown below) to steer the vehicle in the desired direction. The drive wheel position is shown on the vehicle's display screen.

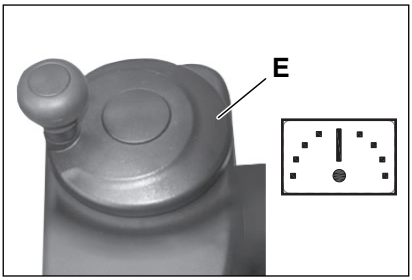

Traveling

Use the travel switch (D) to choose either forward or reverse travel. Vehicle speed increases the further you push or pull the travel switch. When you release the switch, it returns back to the NEUTRAL position.

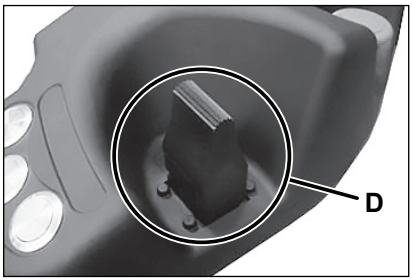

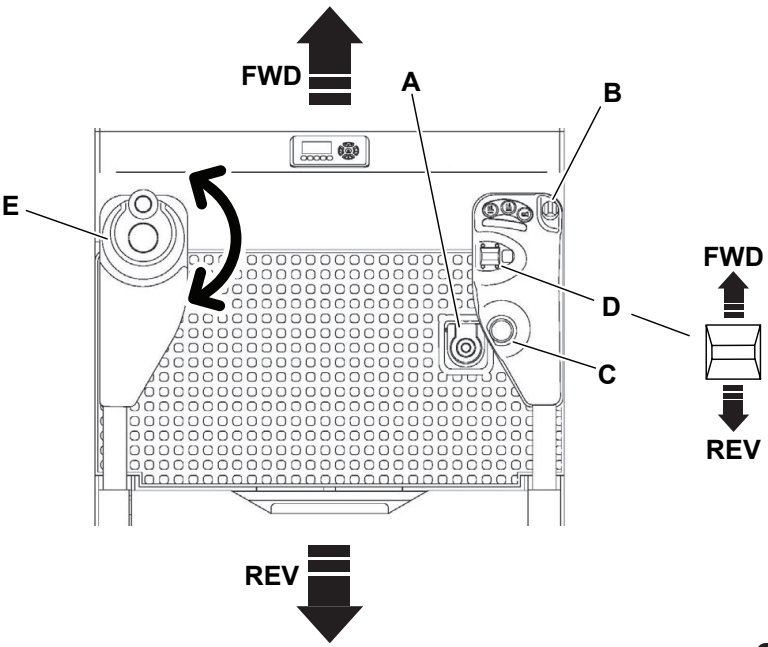

https://truckmanualshub.com/

Braking

The vehicle can brake in three different ways:

- **Reverse Braking**: while the vehicle is traveling, press the travel switch (D) in the opposite direction of travel. The vehicle will decelerate through the traction controller until it starts to move in the opposite direction. Use caution when reverse braking, especially at higher speeds. This is also referred to as "plugging".
- **Coast Braking**: while traveling, release the travel switch (D) and allow the vehicle to coast to a stop.
- **Emergency Braking**: Press the emergency stop switch (C). The vehicle will come to an immediate stop. Also, releasing the foot switch (A) will apply the emergency brake.

The brake method depends on the operating and driving conditions. The operator must always be looking in the direction of travel. If there is no hazard, brake moderately by using the reverse (plugging) or coast method.

CAUTION

Only use the emergency stop switch or foot switch to brake the vehicle during dangerous situations. Overuse can cause damage to the machine.

CAUTION

Use care NOT to accidentally activate the Emergency Stop Switch when operating the vehicle.

https://truckmanualshub.com/

Lifting and Lowering

Lift Control

Press the lift button to raise the operator platform until the desired height is reached.

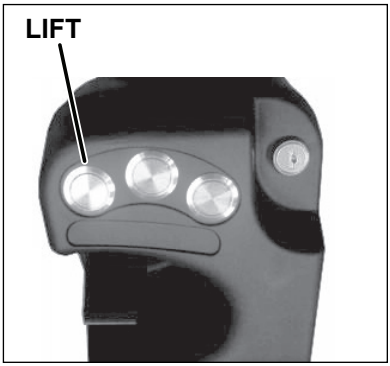

CAUTION
When raising the operator platform, be aware of overhead obstructions.

Lower Control

Press the lower button to lower the operator platform until the desired height is reached.

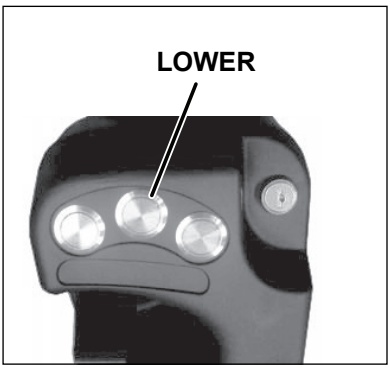

CAUTION
When lowering the operator platform, an intermittent alarm will sound.

Horn Button

Use this to alert others of your presence while operating the vehicle, especially when making turns, approaching blind spots, traveling, etc.

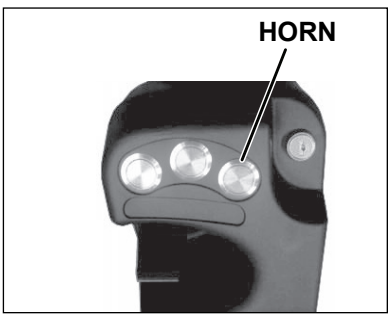

https://truckmanualshub.com/

Load Handling

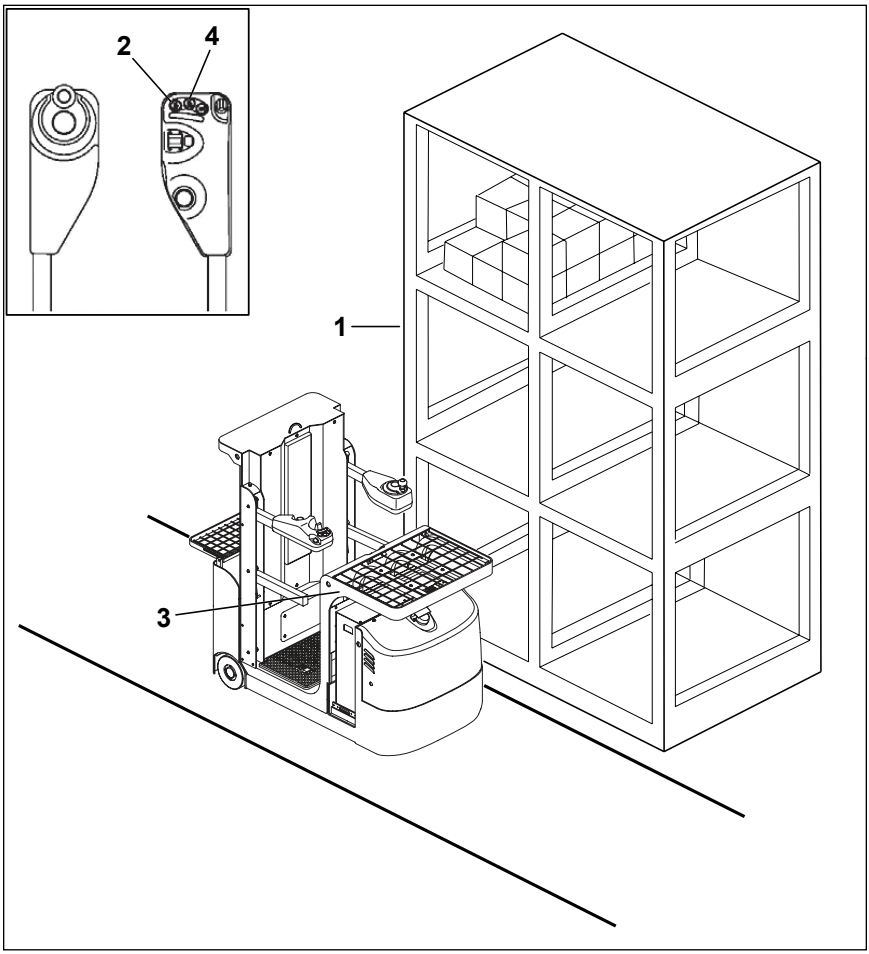

https://truckmanualshub.com/

Picking Loads

- Drive the vehicle up to the storage location (1).
- Press the LIFT button (2) to raise the operator platform until the desired height is reached.
- Pick the load and place onto the front pick tray (3).
- Press the LOWER button (4) until the operator platform reaches the desired lowered height.

CAUTION
Keep the control arms and safety gates fully lowered when picking and placing loads.

Transporting Loads

- Always transport loads with the upright completely lowered.
- Always transport loads using the pick tray.
- Always accelerate gradually.
- Travel at a constant speed.
- Always be prepared to brake. Only stop suddenly during a dangerous or emergency situation.
- Reduce speed accordingly when turning.

Placing Loads

- Position the vehicle carefully up to the storage location.
- Raise the operator platform until the desired height is reached.
- Remove the load to the desired location.
- Lower the operator platform.

Overhead Maintenance

When performing overhead repairs or maintenance, make sure there are no obstacles (such as beams) or other obstructions before elevating the vehicle. Always fully lower the operator platform before moving to the next maintenance location. Never operate this vehicle outside.

https://truckmanualshub.com/

Emergency Lowering

WARNING

Do not leave the operator platform while the operator platform is elevated. Doing so could lead to severe injury or death.

If a situation occurs that requires the operator platform to be lowered manually, such as a loss of power due to controller failure, use the hydraulic release button on the hydraulic solenoid. This button is located on the right-side of the vehicle and is accessed through a hole in the front cover.

While remaining on the operator platform, direct an assistant to use the provided tool (attached to the vehicle's key fob) to release the hydraulic pressure and lower the platform.

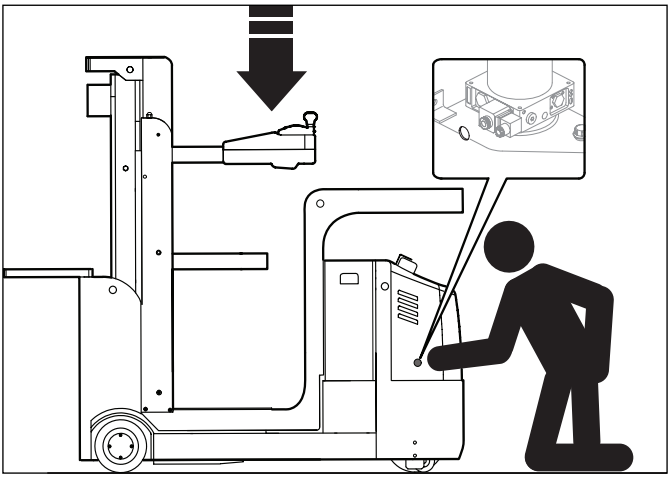

Storing Rear Tray

Lift and rotate the rear tray (1) up and then lower into the rear shroud (2). Returning the rear tray to use is the opposite of storing.

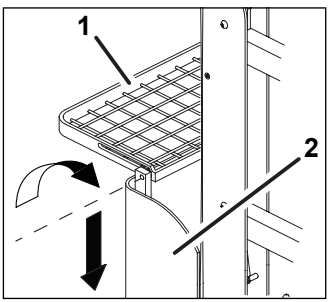

https://truckmanualshub.com/

Parking

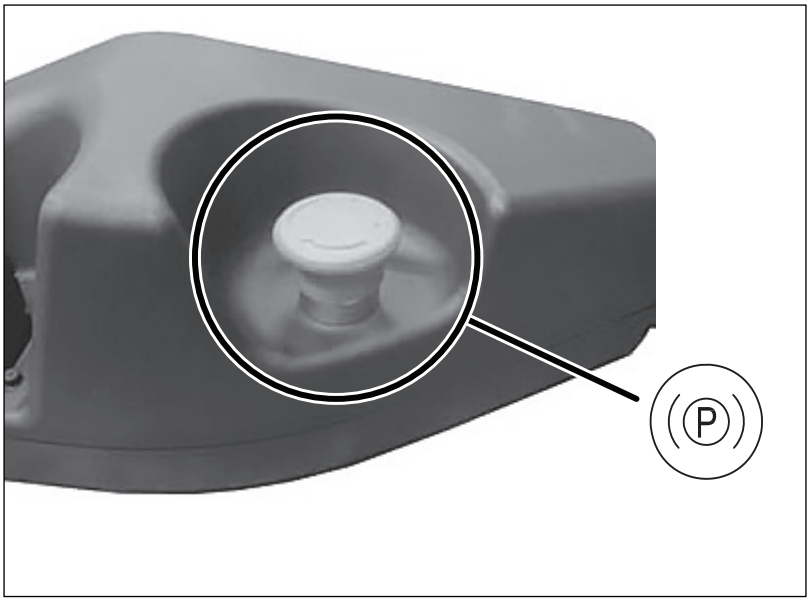

IMPORTANT!
The vehicle must be properly parked whenever you stop operation and leave the vehicle, regardless of the length of time away from the vehicle.

How to Safely Park Your Vehicle:

1. Park the vehicle in a designated parking area. Do not park the vehicle on a slope.
2. Lower the platform completely.
3. Push the emergency stop switch DOWN to apply the parking brake.
4. Turn the key switch to the OFF position. Remove the key and return it to your supervisor or designated key storage location.
5. Disconnect the battery cable.

https://truckmanualshub.com/

https://truckmanualshub.com/

Contents

Daily Inspection Sheet 5.2

Check Horn 5.3

Check Emergency Stop Switch..... 5.3

Check Steering Tiller..... 5.4

Check Travel Control..... 5.4

Check Lift and Lower Controls 5.5

Check Braking 5.5

Check Upright and Lift Chains..... 5.6

Check Wheels and Tires 5.6

Maintenance Issues..... 5.6

IMPORTANT!

OSHA requires the operator to inspect the vehicle before beginning each shift to help ensure a safe operating condition. The following information identifies the important areas to check during these inspections.

https://truckmanualshub.com/

Daily Inspection Sheet

Check	OK	NR	Explanation
Transmission and Hydraulic Units			
Pick and Rear Trays			
Lift Chains, Wiring Harness, Hoses			
Control Arms and Side Gates			
Safety Decals and Data Plate			
Horn and Flashing Light(s)			
Steering Operation			
Travel Controls			
Wheels (drive, load, caster, etc.)			
Hydraulic Controls (lift/lower)			
Emergency Stop Switch (parking brake)			
Battery Disconnect			
High Speed Limiting Function			
Platform Operation			

To assist in completing the OSHA required daily inspection, CLARK offers a prepared form called an **Operator's Daily Checklist**. These forms can be requested from your CLARK dealer. We recommend that you use this form (or similar) to keep a record of your daily inspections and vehicle condition.

CAUTION

Do not attempt to make repairs yourself. Certified vehicle technicians are trained professionals who know how to make repairs safely.

https://truckmanualshub.com/

WARNING

Perform the following operational checks in a safe area away from people, equipment, or other obstructions. Do not operate the vehicle if you find a problem. Remove the vehicle from service and report the problem.

Check Horn

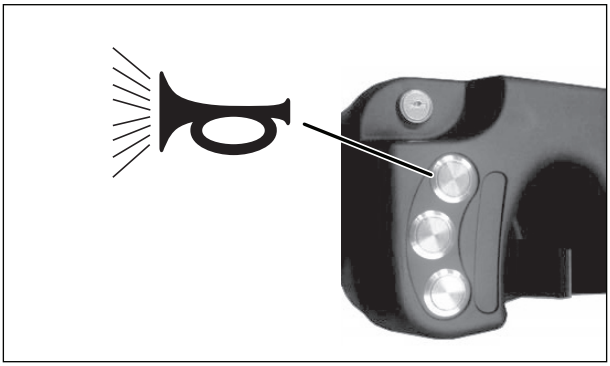

Check for proper horn operation.

Check Emergency Stop Switch

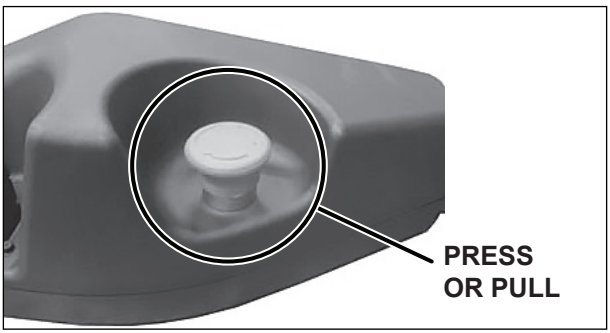

With the vehicle ON, push the emergency stop switch down and attempt to move the vehicle with the travel switch. The vehicle should not energize or move. Pull up on the switch and check that the vehicle turns ON and operates. The switch should also depress and return easily without sticking.

https://truckmanualshub.com/

Check Steering Tiller

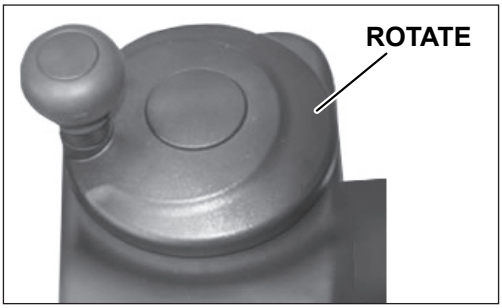

Operate the vehicle in both the FORWARD and REVERSE directions. Rotate the steering tiller in the clockwise and counterclockwise direction. Check for any binding in the steering and ensure the wheel rotates smoothly.

Check Travel Control

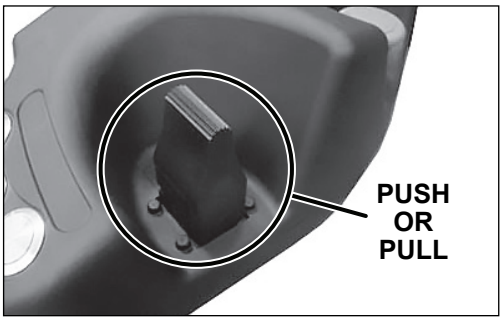

With the vehicle ON, push the travel control fully forward. The vehicle should go into high speed mode and stay there until you release. Release the switch it should return to the NEUTRAL position and the vehicle should coast brake to a stop. Repeat this for the reverse direction.

https://truckmanualshub.com/

Check Lift and Lower Controls

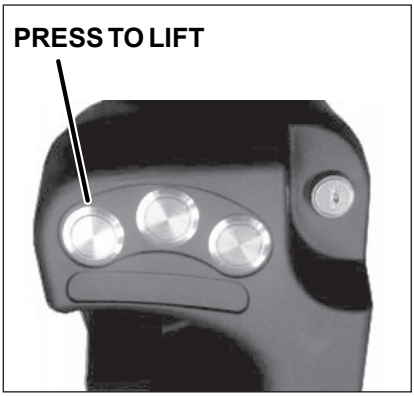

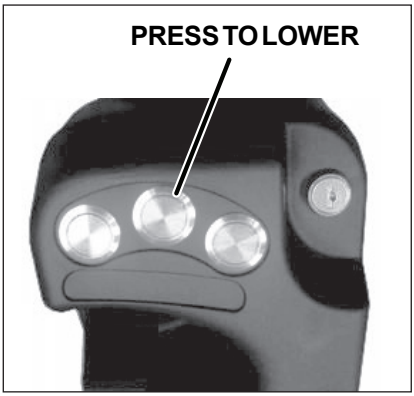

Fully raise and then lower the operator platform. The control buttons should return to the OFF position when released. The hydraulic pump motor should stop when the maximum lift height is reached. Check for any binding in the upright. Report any issues to your supervisor or service technician.

Check Braking

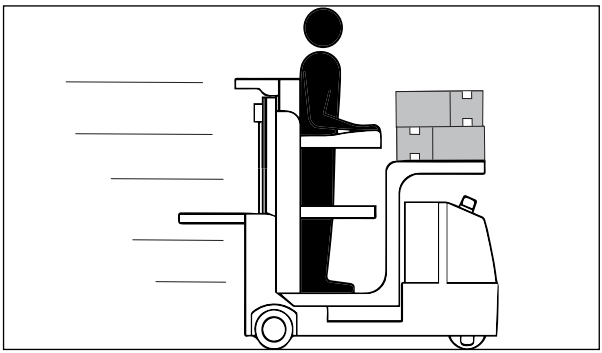

The brake should be applied by either reverse braking (plugging) or by releasing the travel control switch and allowing the vehicle to coast brake. The drive motor should stop when coast braking is used.

Check the foot (dead man's) switch to ensure the emergency / parking brake engages when the foot switch is released. This method of braking is for emergency braking situations only.

https://truckmanualshub.com/

Check Upright and Lift Chains

Check for obvious wear on the upright and lift chains. Check for damaged or missing parts, slack or broken chains, excessive rust and corrosion, cracks, etc. Report any issues to your supervisor or a certified technician.

Check Wheels and Tires

Check for excessive wear, cracks, chunking, or bond failure. Remove any embedded objects. Check the wheel fasteners for proper torque. Check for loose or worn wheel bearings. Check for properly adjusted stabilizer caster wheels. Report any issues to your supervisor or a certified technician.

Maintenance Issues

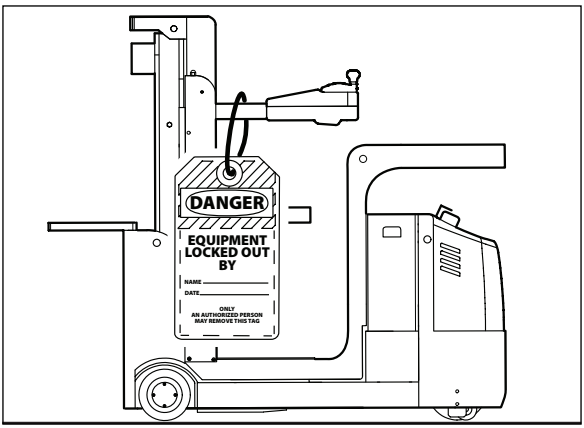

Do not operate a vehicle that has a maintenance issue. Park the vehicle properly and remove the key. Place an "Out of Service" tag on the vehicle. Report any issues to your supervisor or a certified technician.

https://truckmanualshub.com/

https://truckmanualshub.com/

https://truckmanualshub.com/

Contents

Safe Maintenance Practices 6.2

Typical Operating Conditions..... 6.5

Required Inspections 6.5

Planned Maintenance..... 6.6

Lubrication Points 6.7

Cleaning the Vehicle..... 6.8

Welding on the Vehicle 6.8

Tire and Wheel Maintenance 6.8

Hydraulic Hoses 6.8

Battery Maintenance 6.9

IMPORTANT!

THIS SECTION IS INTENDED FOR TRAINED SERVICE TECHNICIANS ONLY. The information in this section is to be used as a reference for determining your Planned Maintenance procedure. For complete maintenance and service information please refer to your vehicle's Service Manual.

https://truckmanualshub.com/

Safe Maintenance Practices

The following instructions have been prepared from current industry and government safety standards applicable to industrial vehicle operation and maintenance. They are listed here for the reference and safety of all workers during inspection and maintenance operations.

If you have any questions regarding the inspection or maintenance procedures for your vehicle, please contact your local CLARK dealer.

1. Powered industrial vehicles can become hazardous if maintenance is neglected. Therefore, suitable maintenance facilities, trained personnel and procedures shall be provided.
2. Maintenance and inspection of all powered industrial vehicles shall be done in conformance with the manufacturer's recommendations.
3. A scheduled planned maintenance, lubrication and inspection system shall be followed.
4. Only trained and authorized personnel shall be permitted to maintain, repair, adjust and inspect industrial vehicles and in accordance with the manufacturer's specifications.
5. Properly ventilate work area, vent exhaust fumes, keep shop clean and floor dry.
6. Avoid fire hazards and have fire protection equipment present in the work area. Do not use an open flame to check electrolyte level. Do not use open pans of fuel or flammable cleaning fluids for cleaning parts.
7. Operation of the vehicle to check performance must be conducted in an authorized, safe, clear area.
8. Before Starting To Work On Vehicle:
   - Raise drive wheel free of floor or disconnect power source and use blocks or other positive vehicle positioning devices.
   - Put blocks under the load-engaging means, or chassis before working on them.
   - Disconnect battery before working on the electrical system.
   - When working on the electrical or hydraulic system, be sure the battery is disconnected.

https://truckmanualshub.com/

9. Before Starting to Drive the Vehicle:
   - Remove drive wheel chocks.
   - Plug-in battery connector.
   - Insert key and turn to ON position.
   - Make sure path of travel is clear.
   - Check function of direction controls and emergency stop switch.
   - Check function of brake.
10. Before Leaving the Vehicle:
   - Park the vehicle in a designated area.
   - Fully lower the upright / operator platform.
   - Turn the key switch to OFF and remove the key.
   - Unplug battery connector.
   - Block drive wheel.
11. Brakes, steering mechanisms, control mechanisms, warning devices, lights, lift overload devices, guards and safety devices, lift mechanisms, and frame members must be carefully and regularly inspected and maintained in a safe operating condition.
12. Special vehicles or devices designed and approved for hazardous area operation must receive special attention to ensure that maintenance preserves the original, approved safe operating features.
13. All hydraulic systems must be regularly inspected and maintained in conformance with good practices. Lift cylinders, valves and other similar parts must be checked to assure that leakage (drift) has not developed to the extent that it would create a hazard.
14. When working on the hydraulic system, make sure the battery is disconnected, the platform is fully lowered, and hydraulic pressure has been relieved in the hoses and tubing.
15. The vehicle manufacturer’s capacity, operation and maintenance instruction plates, tags or decals must be maintained in legible condition.
16. Batteries, motors, controllers, limit switches, protective devices, electrical conductors and connections must be inspected and maintained in conformance with good practices. Special attention must be paid to the condition of electrical insulation.

https://truckmanualshub.com/

17. To avoid injury to personnel or damage to the equipment, consult the manufacturer's procedures in replacing contacts on any battery.
18. Industrial vehicles must be kept in a clean condition to minimize fire hazards and help in the detection of loose or defective parts.
19. Modifications and additions that affect capacity and safe vehicle operation must not be done without the manufacturer's prior written approval. Capacity, operation and maintenance instruction plates, tags or decals must be changed accordingly.

Care must be taken to assure that all replacement parts, including tires, are interchangeable with the original parts and of a quality at least equal to that provided in the original equipment. Parts, including tires, are to be installed per the manufacturer's procedures. **Always use genuine CLARK parts!**

https://truckmanualshub.com/

Typical Operating Conditions

Service intervals are largely determined by operating conditions. The intervals specified in the following table are for **normal** operation. For more severe operation, the maintenance intervals should be shortened. Contact you CLARK dealer for recommended service intervals for your vehicle.

Normal Operation:

Standard, 8-10 hour material handling in a clean, indoor location with smooth, level floors.

Severe / Extreme Operation:

Extended operating hours or continuous usage, dirty environment, high or low temperatures, and sudden temperature changes.

Required Inspections

Frequent Inspections:

The owner and operator are required by ANSI / SAIA A92.6 to ensure frequent vehicle inspections are performed for the following situations:

- If the vehicle has been in service for 150 hours or 3 months.
- If the vehicle has been purchased used and both the frequent and annual inspections are **not** current.
- If the vehicle has been out of service for longer than 3 months.

Annual Inspections:

The owner and operator are required by ANSI / SAIA A92.6 to ensure annual vehicle inspections are performed **no later** than every 700 hours or 13 months of operation.

For both frequent and annual inspections the work must be performed by a qualified service technician.

All service records must be recorded and maintained. See your CLARK dealer for the required inspection form.

https://truckmanualshub.com/

Planned Maintenance

Planned Maintenance	Every 8-10 hr or Daily	Every 50-250 hr or Monthly	Every 450-500 hr or 3 months	Every 900-1000 hr or 6 months	Every 2000 hr or 12 months
CHECK					
Obvious damage and leaks	■				
Upright and lift chains	■				
Capacity plate, warning plates, decals	■				
Wheel fastener torque	■				
Horn operation	■				
Electric brake operation	■				
Dead man's foot switch operation	■				
Emergency stop switch operation	■				
Direction and speed control operation	■				
Lift and lower operation	■				
Battery, cable, terminals, receptacle	■				
Torque on critical fasteners		■			
Drive and steer motors		■			
Hydraulic unit and fluid level		■			
Drive unit and fluid level		■			
Check lift chains for wear and stretch			■		
CLEAN					
Vehicle with compressed air		■			
Battery terminals and receptacle		■			
Drive and steer motor air vents		■			
LUBRICATE					
Apply grease (see location graphic)		■			
TEST					
Vehicle ground		■			
Electric steering		■			
Battery load		■			
REPLACE					
Hydraulic unit fluid and filter					■
Drive unit fluid					■

https://truckmanualshub.com/

Lubrication Points

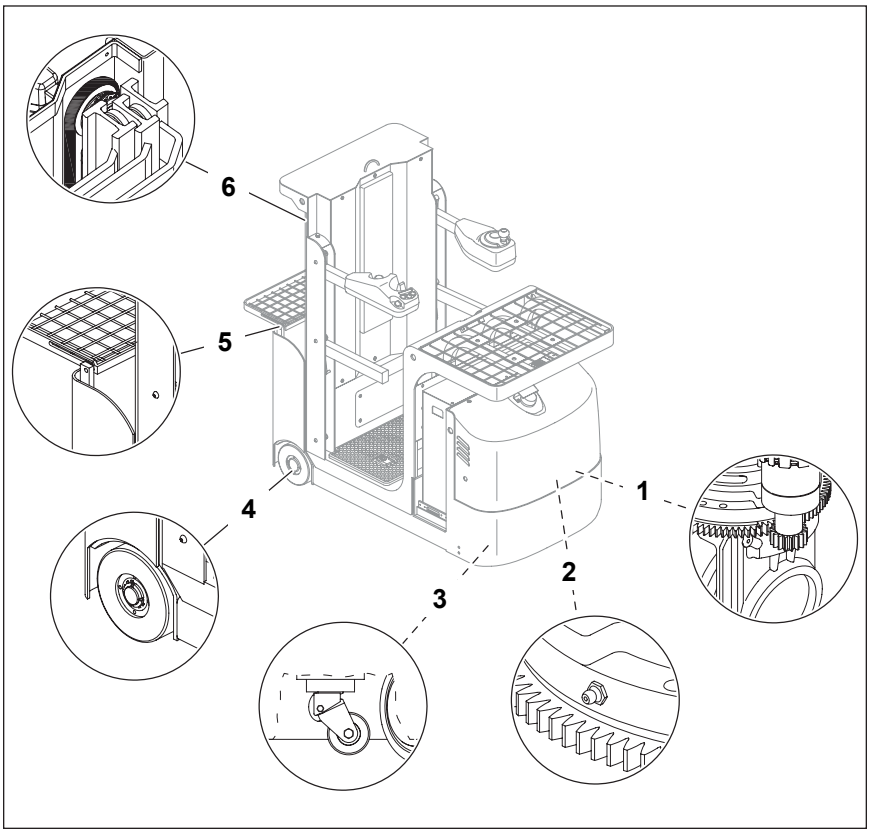

Item	Component	Service Interval
1	Steering Motor Gear	150 hours or monthly
2	Drive Unit Steering Bearing	150 hours or monthly
3	Stabilizer Caster Wheels	150 hours or monthly
4	Load Wheels	150 hours or monthly
5	Rear Pick Tray	250 hours or monthly
6	Upright Rails, Rollers and Chain	Rails: 150 hours or monthly Rollers: 250 hours or monthly Chain: 250 hours or monthly

https://truckmanualshub.com/

Cleaning the Vehicle

Before attempting to clean the vehicle, all safety measures must be taken to prevent shorting (sparking) of the electric circuits:

- The battery connector must be removed.
- Only compressed air and/or non-conductive, anti-static brushes may be used for cleaning electrical assemblies.
- Do not use pressurized water to clean the vehicle.
- Do not use flammable solvents to clean the vehicle.
- After cleaning, check all functions of the vehicle for correct function.

Welding on the Vehicle

Always remove all electric or electronic components before performing any welding on the vehicle.

Tire and Wheel Maintenance

The quality of the tires or wheels direct affects the stability and performance of the vehicle. Only use CLARK factory components, as noted on the data plate, when repairing or replacing tires or wheels.

When replacing tires or wheels on your vehicle, always replace in pairs (if applicable).

Hydraulic Hoses

All hydraulic hoses should be replaced at least every 6 years. If replacing hydraulic components, also replace the hoses in the hydraulic system.

https://truckmanualshub.com/

Battery Maintenance

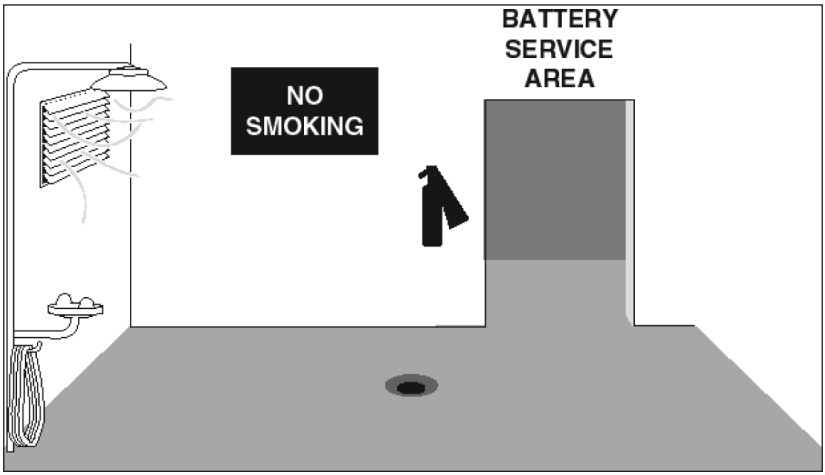

Battery charging installations must be located in areas designated for that purpose. These areas must be kept free of all nonessential combustible materials.

Facilities must be provided for:

- Flushing spilled electrolyte.
- Fire protection.
- Protecting charging apparatus from damage by vehicles.
- Adequate ventilation for dispersal of fumes from gassing batteries.
- When handling acid concentrates greater than 50% acid (above 1.400 specific gravity), an eye wash fountain must be provided.

A conveyor, overhead hoist, or equivalent material handling equipment must be provided for handling batteries.

IMPORTANT!
Electric vehicle batteries are heavy and awkward to handle. Before you remove, service, or install a vehicle battery, carefully read the following recommendations and instructions.

https://truckmanualshub.com/

Battery Handling

1. Only remove or service storage batteries in an area designated for this purpose.
2. Make sure the battery service area has provisions to flush and neutralize spills, ventilate fumes from gassing batteries, and for fire protection.
3. This area should be equipped with material handling tools designed for removing and replacing batteries, including a conveyor or overhead hoist. Use lift hooks that have safety latches.
4. Always use a special lifting device, such as an insulted spreader bar, to attach the hoist to the battery. The width of the spreader bar must be the same as the lifting eyes of the battery, to prevent damage to the battery. Make sure the lift hooks are the correct size to fit the lifting eyes of the battery.
5. If the battery does not have a cover of its own or has exposed terminals and connectors, cover the top with an insulating (non-conductive) material, such as a sheet of plywood or heavy cardboard, prior to attaching the lifting device.
6. Chain hoists or power battery hoists must be equipped with load chain containers to accumulate the excess lifting chain.
7. Keep all tools and other metal objects away from terminals.

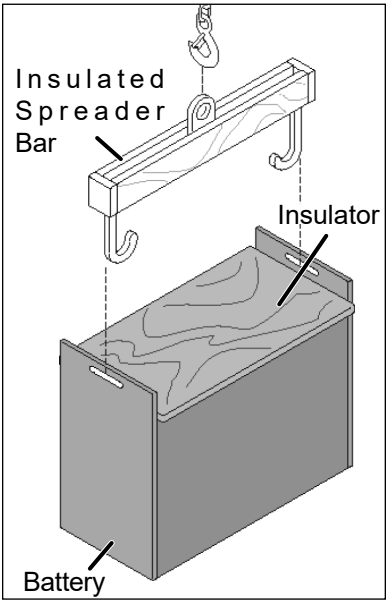

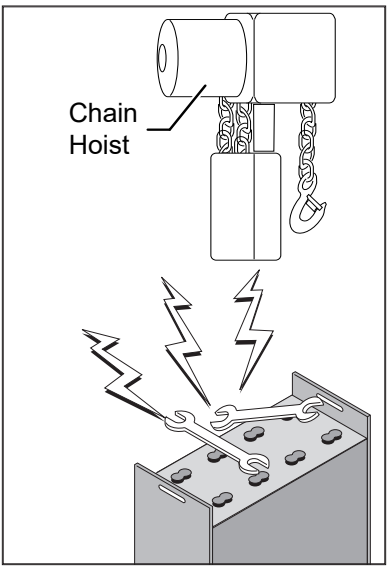

https://truckmanualshub.com/

Battery Charging

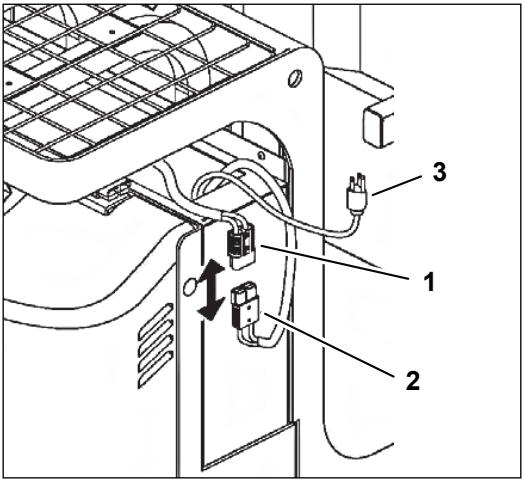

1. Check all cables and connections for signs of damage.
2. Make sure the vehicle is powered OFF.
3. Follow the safety procedure and regulations as required by the battery and charging station manufacturer(s).
4. Park the vehicle securely as described in this manual.
5. Remove the cover plate on the top of the battery.
6. Remove the plug (1) and connect to the charger plug (2).
7. Connect the battery plug (3) to the charger and turn the charger ON.

WARNING

- Do not smoke or have open flames or sparks near battery charging areas or batteries. An explosion can occur causing severe injury or death.
- The battery contains corrosive sulfuric acid that can cause injury. If acid contacts your eyes or skin, flush immediately with water and get medical assistance.
- Battery service must be done by authorized personnel.

https://truckmanualshub.com/

Battery Removal and Installation

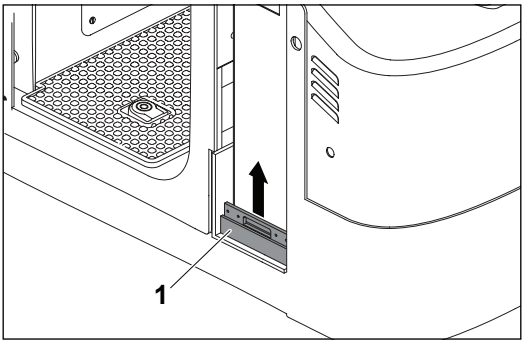

1. Park the vehicle in the designated battery service area.
2. Disconnect the battery connector.
3. Secure the battery connector out of the way to prevent it from being caught on the vehicle when the battery is removed.
4. Remove the battery baffle (1) and roll the battery out from the side.
5. Use an approved lifting device to remove and transport the vehicle battery. Remove the battery and move it to a safe, secure storage location on an approved battery rack or wooden pallet.
6. Installation is the reverse of removal.

Battery Care

Battery Cleaning

Never wash the battery when it is in the vehicle. The easiest and most satisfactory method of cleaning a battery is to wash it occasionally with a low-pressure cold water spray. The top can also be cleaned using a solution of baking soda and water (combine 1/2 lb of baking soda with 1 gallon of clean water, then stir to dissolve) and rinsed with clean water. It is good practice to have this solution in a battery room at all times.

Refer to the battery manufacturer or supplier for their recommended battery maintenance and care procedures.

Use CLARK Battery Saver Oil, to clean and protect the your vehicle's battery.

https://truckmanualshub.com/

New Vehicle Batteries

Apply a light coat of CLARK Battery Saver Oil to entire surface of battery. Allow to sit for approximately 30 seconds, then wipe thoroughly with a cloth or rag. A chemical reaction will dissolve rust and corrosion. After cleaning, apply a second coat for corrosion protection. This will prevent the battery terminals and cable connections from corroding.

Battery Service Records

Keep a record of battery service and maintenance to get the best service life from your battery and vehicle. Select a pilot cell, take readings of specific gravity and temperature before and after charging, and record the readings with the date. It is best to change the location of the pilot cell occasionally to distribute any electrolyte loss over the battery.

Every 2 or 3 months, take complete battery readings (specific gravity, temperature, and voltage) and make a record of them.

Battery Life

To maximize battery life:

1. Follow normal battery maintenance procedures, re-charging before 80% discharged and with periodic equalizing charges.
2. Don’t add acid to a battery. Only a qualified battery technician should determine if this maintenance is necessary.
3. Lift battery only with a correctly-constructed lifting device that will not put pressure on the battery case.
4. Keep open flames, tools, and metal objects away from the top of battery to prevent short circuits and explosions.
5. Do not overcharge.
6. Check the battery electrolyte level after each charging. Add water if the top of the separator or plates are visible. Do not overfill!
7. Keep the battery clean and dry. Clean as needed.
8. Keep battery service records.

https://truckmanualshub.com/

https://truckmanualshub.com/

Contents

Storing the Vehicle 7.2

Towing and Transporting 7.3

Tow Hitch (Optional)..... 7.4

https://truckmanualshub.com/

Storing the Vehicle

Perform the following actions if the vehicle is not to be used for two (2) months or longer.

Battery:

Fully charge the battery and perform routing maintenance of the battery

Charge the battery every three (3) months.

Disconnect and remove the battery from the vehicle. Store in an appropriate location.

Hydraulic and Drive Units:

Check the fluid levels and add as necessary. Replace the fluids when storing the vehicle for one (1) year or longer.

General Vehicle:

Apply a thin layer of oil or grease to any non-painted surface to prevent the formation of rust or corrosion.

Drive and Load Wheels:

Support the driving section of the vehicle with blocks to prevent extend loading on the drive and load wheels when storing for longer than two (2) months.

Returning Vehicle to Service:

Perform checks on the following after storing for an extended period:

- Vehicle damage or deterioration
- Wheels (caster/drive/load)
- Horn operation
- Brake operation
- Steering tiller operation
- Lift and lower operation
- Travel control operation
- Apply grease to lubrication points
- Battery charge level and charging rate

https://truckmanualshub.com/

Towing and Transporting

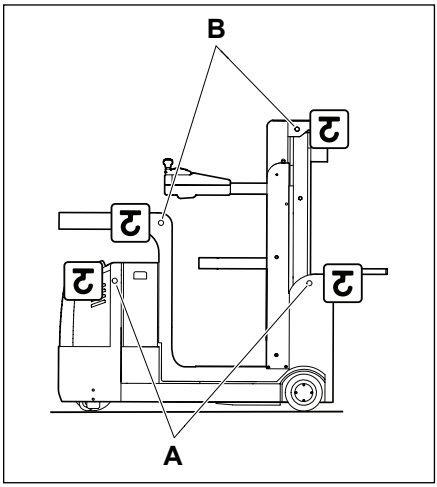

Use lift points (**A**) to raise or secure the main body of the vehicle.

Use lift points (**B**) to raise or secure the operator's platform and upright.

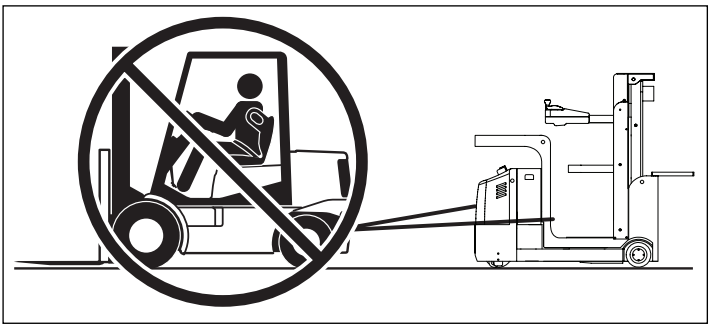

CAUTION

Do not attempt to pull or push the vehicle with another vehicle. The EM-brake must be manually released before attempting to move a disabled vehicle or damage will occur. Refer to your Service Manual for the correct procedure.

https://truckmanualshub.com/

Tow Hitch (Optional)

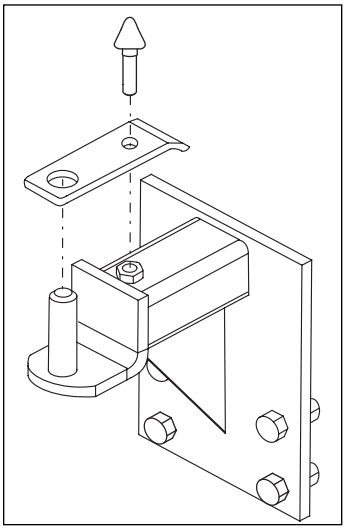

To use the tow hitch:

- Remove the fastener and the cover.
- Attach the item to be towed to the hitch.
- Install the cover and the fastener.

CAUTION

The maximum towing capacity for the rear tow hitch is 2500 lb (1133 kg).

https://truckmanualshub.com/

https://truckmanualshub.com/

https://truckmanualshub.com/

Contents

Vehicle Dimensions 8.2

Capacity 8.4

Travel Speed and Lift Height 8.5

Recommended Lubricants 8.6

Battery 8.7

https://truckmanualshub.com/

Vehicle Dimensions

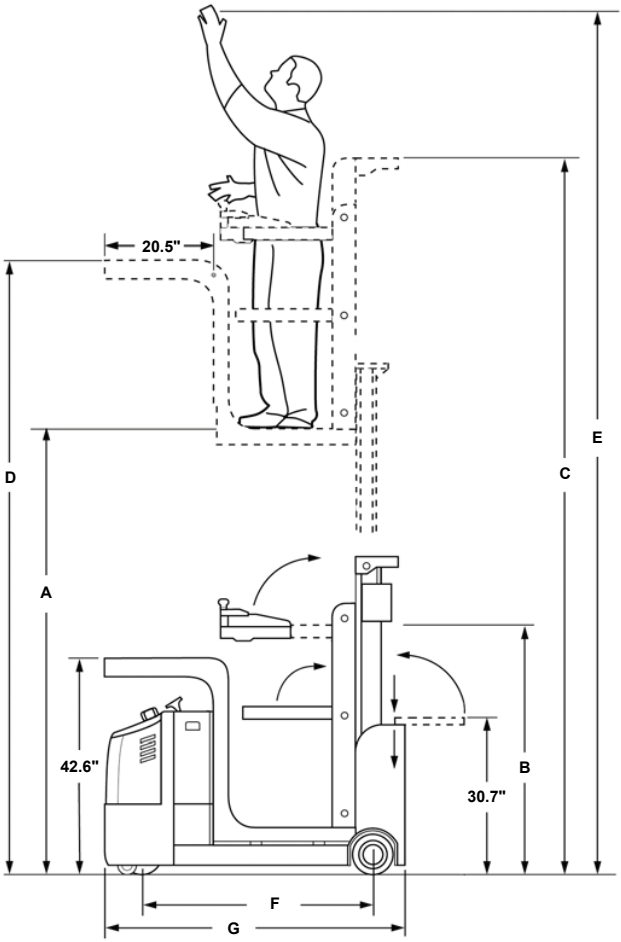

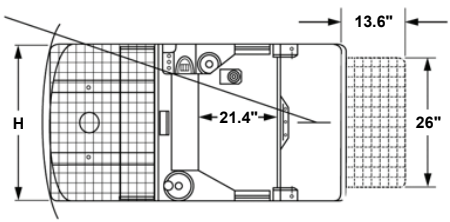

https://truckmanualshub.com/

Lift Height	Collapsed Height	Extended Height	Load Tray Height	Work Height	Chassis Weight
A	B	C	D	E	
126"	62.6"	178.6"	159"	203"	2268 lb
162"	82"	236"	195"	239"	2610 lb
192"	83"	264"	225"	269"	3160 lb

Wheel-to-Wheel Distance	Vehicle Width	Vehicle Length	Turning Radius	Minimum Turn Aisle Width
F	G	H		
45.2"	59"	31.5"	52.5"	72"
45.2"	59"	31.5"	52.5"	72"
49"	63.3"	34"	56"	72"

https://truckmanualshub.com/

Capacity

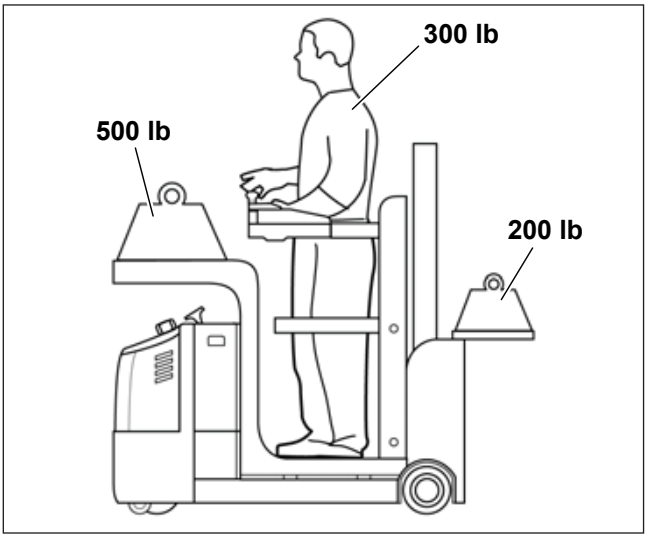

IMPORTANT!
When operating below a lift height of 126", the maximum combined lifting capacity is 1000 lb.

IMPORTANT!
When operating between a lift height of 126" and 162", the maximum capacity of the front pick tray is reduced to 150 lb.

When operating above a lift height of 162", the maximum capacity of the front pick tray is reduced to 150 lb and the maximum operator capacity is reduced to 250 lb.

https://truckmanualshub.com/

Travel Speed and Lift Height

	OSQ 126	OSQ 162	OSQ 192
Maximum Travel Speed (Optional)	5.0 mph (8.0 km/h)	5.0 mph (8.0 km/h)	5.0 mph (8.0 km/h)
	< 22"	< 22"	< 22"
Maximum Travel Speed (Standard)	3.4 mph (5.5 km/h)	3.4 mph (5.5 km/h)	3.4 mph (5.5 km/h)
	< 22"	< 22"	< 22"
Speed Cutback #1	2.3 mph (3.7 km/h)	2.3 mph (3.7 km/h)	2.3 mph (3.7 km/h)
	24" – 76"	24" – 76"	24" – 76"
Speed Cutback #2	1.5 mph (2.5 km/h)	1.5 mph (2.5 km/h)	1.5 mph (2.5 km/h)
	76" – 102"	76" – 102"	76" – 102"
Speed Cutback #3	0.6 mph (1 km/h)	0.6 mph (1 km/h)	0.6 mph (1 km/h)
	102" – 126"	102" – 162"	102" – 192"
Lift Cutout Height	126"	162"	192"

https://truckmanualshub.com/

Recommended Lubricants

Component	Fluid Type	CLARK P/N	Capacity
Hydraulic Unit	ISO AW 32 Hydraulic Fluid (MS-68)	1800236 (qt) 1802155 (gal)	OSQ126 = 6.87 qt (6.5 L) OSQ162 = 8.99 qt (8.5 L) OSQ192 = 9.94 qt (9.4 L)
Drive Unit	SAE 80W-90 GL-5 Gear Oil	1808014 (qt)	1.46 qt (1.38 L)
Chassis	NLGI #2 Grease (MS-107C)	VV70133	N/A
Upright Rails	CLARK Innerslide Lube	886396	N/A
Lift Chains	CLARK Chain Lube	886399	N/A

https://truckmanualshub.com/

Battery

Power:

24V AC electric Zapi AC-0 traction and EPS AC-0 steering controllers.

Type:

Standard: 24V, 224 Ah AGM battery pack, includes integrated 120V charger.

Optional: 24V, 280 Ah industrial lead-acid battery, external charger required (NOTE: standard equipment for OSQ 192 models).

Dimensions:

OSQ 126/162 Models: 29.1" x 7.8" x 26.3"

OSQ 192 Model: 31.4" x 11.0" x 26.3"

Weight:

OSQ 126/162 Models: 360 lb (163 kg)

OSQ 192 Model: 552 lb (250 kg)

https://truckmanualshub.com/

https://truckmanualshub.com/

https://truckmanualshub.com/

Scan Link Below

Safety Starts with You!

OM-1201

CLARK® Material Handling Company

700 Enterprise Drive
Lexington KY 40510

Additional copies of this manual are available from your CLARK dealer.