https://truckmanualshub.com/

Genie®
A TEREX BRAND

Service and Repair Manual

GS-1530/32
GS-1930/32
GS-2032
GS-2632
GS-3232
GS-2046
GS-2646
GS-3246
GS-4047

This manual includes:
Repair procedures
Fault Codes
Electrical and
Hydraulic Schematics

For detailed maintenance procedures, refer to the appropriate Maintenance Manual for your machine.

Part No. 1272217
Rev B
April 2017

https://truckmanualshub.com/

Introduction

Important

Read, understand and obey the safety rules and operating instructions in the appropriate Operator's Manual on your machine before attempting any procedure.

This manual provides troubleshooting and repair procedures for qualified service professionals.

Basic mechanical, hydraulic and electrical skills are required to perform most procedures. However, several procedures require specialized skills, tools, lifting equipment and a suitable workshop. In these instances, we strongly recommend that maintenance and repair be performed at an authorized Genie dealer service center.

Compliance

Machine Classification

Group A/Type 3 as defined by ISO 16368

Machine Design Life

Unrestricted with proper operation, inspection and scheduled maintenance.

Technical Publications

Genie has endeavored to deliver the highest degree of accuracy possible. However, continuous improvement of our products is a Genie policy. Therefore, product specifications are subject to change without notice.

Readers are encouraged to notify Genie of errors and send in suggestions for improvement. All communications will be carefully considered for future printings of this and all other manuals.

Contact Us:

Internet: www.genielift.com
E-mail: awp.techpub@terex.com

Find a Manual for this Model

Go to http://www.genielift.com

Use the links to locate Service Manuals, Maintenance Manuals, Service and Repair Manuals, Parts Manuals and Operator's Manuals.

Copyright © 2016 by Terex Corporation

1272215GT Rev B, April 2017
First Edition, Second Printing

Genie is a registered trademark of Terex South Dakota, Inc. in the U.S.A. and many other countries.

“GS” is a trademark of Terex South Dakota, Inc.

https://truckmanualshub.com/

Serial Number Range

Use the following chart to identify the specific serial number for models included in this manual.

Models	Serial number
GS-1530 / GS-1532 GS-1930 / GS-1932	from SN GS3010A-110000 from SN GS3011C-10000 to GS3016C-23999 from SN GS3014D-101 to GS3016D-607 from SN GS3016P-151487 to GS3016P-160599 from GS30C-24000 from GS30D-6080 from GS30P-160600
GS-2032/2632/3232	from SN GS3211A-110000 from SN GS3212C-10000 to GS3216C-17299 from SN GS3216P-142676 to GS3216P-148699 from GS32C-17300 from GS32P-148700
GS-2046/2646/3246	from SN GS4612A-110000 from SN GS4612C-10000 to GS4616C-18099 from SN GS4614D-101 to GS4616D-5029 from SN GS4616P-138362 to GS4616P-141799 from GS46C-18100 from GS46D-5030 from GS46P-141800
GS-4047	from SN GS4712C-101 to GS4716C-4499 from SN GS4714D-101 to GS4716D-3959 from GS4716P-101 to GS4716P-999 from GS47C-4500 from GS47D-3960 from GS47P-1000

https://truckmanualshub.com/

Introduction

Revision History

Revision	Date	Section	Procedure / Page / Description
A	3/2016		Initial Release
A1	5/2016	Repair	Procedures 2-3, 2-4, 9-11
		Diagnostics	H067 fault
A2	5/2016	Repair	Procedure 2-6
		Diagnostics	Type CXXX and UXXX fault codes
A3	9/2016	Introduction	Serial Number Legend
		Specifications	Add drive speed stowed parameters
B	4/2017	Repair	Procedure 11-1
		Diagnostics	Battery charger and fault codes

Reference Examples:	**Electronic Version** Click on any content or procedure in the Table of Contents to view the update.
Section – Repair Procedure, 4-2	
Section – Fault Codes, All charts	
Section – Schematics, Legends and schematics	

https://truckmanualshub.com/

Revision History(continued)

Revision	Date	Section	Procedure / Page / Description

Reference Examples:

Section – Repair Procedure, 4-2

Section – Fault Codes, All charts

Section – Schematics, Legends and schematics

Electronic Version

Click on any content or procedure in the Table of Contents to view the update.

https://truckmanualshub.com/

Introduction

Serial Number Legend

To August 31, 2016

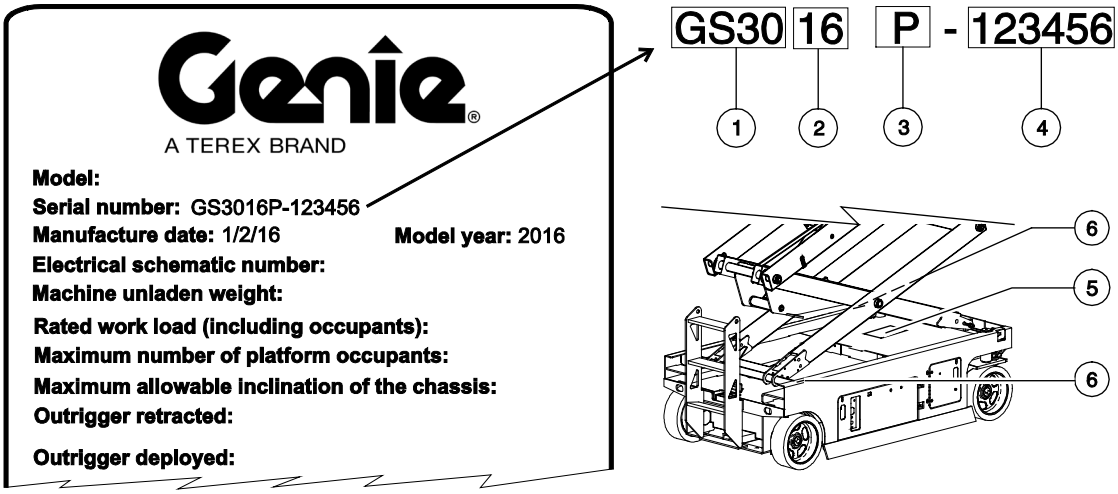

1 Model
2 Model year
3 Facility code

1 Sequence number
2 Serial label (located on chassis)
3 Serial number (stamped on chassis)

From September 1, 2016

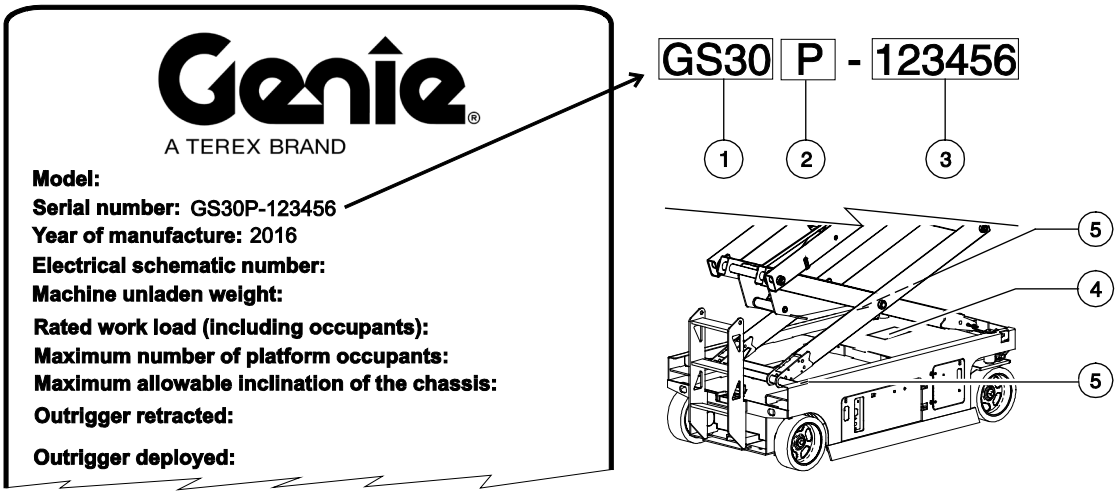

1 Model
2 Facility code
3 Sequence number

1 Serial label (located on chassis)
2 Serial number (stamped on chassis)

https://truckmanualshub.com/

Safety Rules

Danger

Failure to obey the instructions and safety rules in this manual and the appropriate Operator's Manual on your machine will result in death or serious injury.

Many of the hazards identified in the operator's manual are also safety hazards when maintenance and repair procedures are performed.

Do Not Perform Maintenance Unless:

☑ You are trained and qualified to perform maintenance on this machine.

☑ You read, understand and obey:

- manufacturer's instructions and safety rules
- employer's safety rules and worksite regulations
- applicable governmental regulations

☑ You have the appropriate tools, lifting equipment and a suitable workshop.

https://truckmanualshub.com/

Safety Rules

Personal Safety

Any person working on or around a machine must be aware of all known safety hazards. Personal safety and the continued safe operation of the machine should be your top priority.

Read each procedure thoroughly. This manual and the decals on the machine, use signal words to identify the following:

Safety alert symbol—used to alert personnel to potential personal injury hazards. Obey all safety messages that follow this symbol to avoid possible injury or death.

DANGER Indicates a imminently hazardous situation which, if not avoided, will result in death or serious injury.

WARNING Indicates a potentially hazardous situation which, if not avoided, could result in death or serious injury.

CAUTION Indicates a potentially hazardous situation which, if not avoided, may cause minor or moderate injury.

NOTICE Indicates a potentially hazardous situation which, if not avoided, may result in property damage.

Be sure to wear protective eye wear and other protective clothing if the situation warrants it.

Be aware of potential crushing hazards such as moving parts, free swinging or unsecured components when lifting or placing loads. Always wear approved steel-toed shoes.

Workplace Safety

Any person working on or around a machine must be aware of all known safety hazards. Personal safety and the continued safe operation of the machine should be your top priority.

Be sure to keep sparks, flames and lighted tobacco away from flammable and combustible materials like battery gases and engine fuels. Always have an approved fire extinguisher within easy reach.

Be sure that all tools and working areas are properly maintained and ready for use. Keep work surfaces clean and free of debris that could get into machine components and cause damage.

Be sure any forklift, overhead crane or other lifting or supporting device is fully capable of supporting and stabilizing the weight to be lifted. Use only chains or straps that are in good condition and of ample capacity.

Be sure that fasteners intended for one time use (i.e., cotter pins and self-locking nuts) are not reused. These components may fail if they are used a second time.

Be sure to properly dispose of old oil or other fluids. Use an approved container. Please be environmentally safe.

Be sure that your workshop or work area is properly ventilated and well lit.

https://truckmanualshub.com/

Table of Contents

Introduction	**Introduction**	**ii**
	Important Information	ii
	Find a Manual for this Model	ii
	Serial Number Range	iii
	Revision History	iv
	Serial Number Legend	vi
Section 1	**Safety Rules**	**vii**
	General Safety Rules	vii
Section 2	**Specifications**	**1**
	Machine Specifications	1
	Performance Specifications (models without proportional lift function)	3
	Performance Specifications (models with proportional lift)	5
	Hydraulic Oil Specifications	7
	Hydraulic Component Specifications	10
	Manifold Component Specifications	11
	Hydraulic Hose and Fitting Torque Specifications	12
	Torque Procedure	13
Section 3	**Repair Procedures**	**15**
	Introduction	15
	Platform Controls	**17**
	1-1 Circuit Board	19
	1-2 Joystick	20
	1-3 Platfrom Controls Alarm	20
	1-4 Platform Emergency Stop Button	21

https://truckmanualshub.com/

Table of Contents

Ground Controls **22**
2-1 Software Revision Level 23
2-2 Machine Setup 24
2-3 Loading or Updating Machine Software 25
2-4 Using a Wi-Fi Router to Connect to the SmartLink Web Service Tool 30
2-5 Service Override Mode 32
2-6 Level Sensors 34
2-7 Manual Platform Lowering Cable 49
2-8 Outrigger Calibration 51

Hydraulic Tank **52**
3-1 Hydraulic Tank 52

Hydraulic Pump **53**
4-1 Hydraulic Pump 53
How to Remove the Hydraulic Pump 54

Manifolds **56**
5-1 Function Manifold Components – GS-1530, GS-1532, GS-1930 and GS-1932 56
5-2 Function Manifold Components – GS-2032, GS-2632, GS-3232, GS-2046, GS-2646 and GS-3246 58
5-3 Function Manifold Components – GS-4047 60
5-4 Check Valve Manifold Components – GS-1530, GS-1532, GS-1930 and GS-1932 62
5-5 Lift Pressure Selector Manifold Components – GS-4047 63
5-6 Outrigger Function Manifold Components – GS-3232 64
5-7 Outrigger Cylinder Manifold Components – GS-3232 65
5-8 Valve Adjustments – Function Manifold 66
5-9 Valve Coils 72

Steer Axle Components **74**
6-1 Yoke and Drive Motor 74
6-2 Steer Cylinder 75
6-3 Steer Bellcrank 76

https://truckmanualshub.com/

Table of Contents

Non-Steer Axle Components....77
7-1 Drive Brake....77

Brake Release Hand Pump Components....78
8-1 Brake Release Hand Pump Components....78

Scissor Components....79
9-1 Scissor Assembly, GS-1530 and GS-1532....80
9-2 Scissor Assembly, GS-1930 and GS-1932....86
9-3 Scissor Assembly, GS-2032 and GS-2046....94
9-4 Scissor Assembly, GS-2632 and GS-2646....101
9-5 Scissor Assembly, GS-3232 and GS-3246....109
9-6 Scissor Assembly, GS-4047....118
9-7 Scissor Arm Wear Pads....126
9-8 Platform Height Sensor....128
9-9 Lift Cylinder....130
9-10 Pressure Transducer....141
9-11 Platform Overload System....143
9-12 Platform Overload Recovery....148

Platform Components....150
10-1 Platform....150
10-2 Platform Extension Deck....151

Battery Charger....152
11-1 Battery Charger....152
Selecting a Charge Profile....153

https://truckmanualshub.com/

Table of Contents

Section 4 **Diagnostics** **155**
Introduction 155
GCON I/O Map without Load Sense (all machines except GS-3232) 158
GCON I/O Map with Load Sense (all machines except GS-3232) 159
GCON I/O Map without Load Sense GS-3232 only) 160
GCON I/O Map with Load Sense (GS-3232 only) 162
Operation Indicator Codes (OIC) 164
Diagnostic Trouble Codes (DTC) 164
Troubleshooting "HXXX" and "PXXX" Faults 165
Fault Inspection Procedure 166
Type "HXXX" Faults 168
Type "PXXX" Faults 172
Type "UXXX" Faults 173
Type "FXXX" Faults 176
Type "CXXX" Faults 179
Battery Charger 181
Charger Fault Codes 182
Charger Error Codes 183

https://truckmanualshub.com/

Table of Contents

Section 5 **Schematics** **187**
Introduction 187
Electrical Component and Wire Color Legends 188
Wiring Diagram Ground and Platform Controls 190
Limit Switch Legend 191
Electrical Symbol Legend 192
Hydraulic Symbols Legend 193
Hydraulic Schematics **194**
Hydraulic Component Reference Legend 194
Hydraulic Component Abbreviation Legend 195
Hydraulic Schematic, GS-1530, 1532, 1930, 1932 (from serial number GS3010A-110000, GS3011C-10000, GS3014D-101, GS3016P-142281) 196
Hydraulic Schematic, GS-2032, 2632, 3232, 2046, 2646, 3246 (from serial number GS3211A-110000 to GS3214A-119070, GS3212C-10000 to GS3214C-11873, GS4612A-110000 to GS4614A-117177, GS4614C-10000 to GS4614C-12073) 197
Hydraulic Schematic, GS-2032, 2632, 3232, 2046, 2646, 3246 (from serial number GS3214A-119071, GS3214C-11874, GS4614A-117178, GS4614C-12074, GS4614D-101) 198
Hydraulic Schematic, GS-3232 (from serial number GS3211A-110000, GS3212C-10000, GS3216P-142677) 199
Hydraulic Schematic, GS-4047 (from serial number GS4712C-101 to GS4714C-1459) 200
Hydraulic Schematic, GS-4047 (from serial number GS4714C-1460, GS4714D-101, GS4716P-101) 201

https://truckmanualshub.com/

Table of Contents

Electrical Schematics – ANSI / CSA Models 203

Electrical Schematic GS-1530 / GS-1930, ANS / CSA (from serial number GS3010A-110000 to GS3011A-110827) 204

Electrical Schematic, GS-1530 / GS-1930, ANSI / CSA (from serial number GS3011A-110828 to GS3014A-136972, GS3014D-101 to GS3015D-1113) 208

Electrical Schematic, GS-1530 / GS-1930 (from serial number GS3014A-136973, GS3015D-1114 to GS3016D-5426, GS3016P-142281 to GS3016P-158208) 212

Electrical Schematic, GS-1530/1930, ANSI/CSA (from GS3016D-5427, GS3016P-158209) 216

Electrical Schematic, GS-3232, ANSI / CSA (from serial number GS3211A-110000 to GS3214A-135714) 218

Electrical Schematic, GS-3232, ANSI / CSA (from serial number GS3214A-135715 to GS3215A-141898) 222

Electrical Schematic, GS-3232, ANSI / CSA (from serial number GS3215A-141899, GS3216P-142677 to GS3216P-146462) 226

Electrical Schematic, GS-3232, ANSI / CSA from (GS3216P-146463) 230

Electrical Schematic, GS-2032, 2632, 2046, 2646, ANSI / CSA (from serial number GS3211A-110000 to GS3214A-135714, GS4612A-110000 to GS4614A-135366, GS4613D-101 to GS4615D-1303) 234

Electrical Schematic, GS-2032, 2632, 2046, 2646, ANSI/CSA (from serial number GS3214A-1135715 to GS3215A-141898, GS4614A-135367 to GS4615A-137959, GS4615D-1304) 238

Electrical Schematic, GS-2032, 2632, 2046, 2646, ANSI / CSA (from serial numbers GS3215A-14189, GS3216P-142676 to GS3216P-146462, GS4615A-137960, GS4615A-137960, GS4615D-1305 to GS4616D-4432, GS4616P-138362 to GS4616P-139710) 242

Electrical Schematic, GS-2032, 2632, 2046, 2646, ANSI / CSA (from serial number GS3216P-146463, GS4616D-4433, GS4616P-139711) 246

Electrical Schematic, GS-3246 / GS-4047, ANSI / CSA (from serial number GS4612A-110000 to GS4614A-135366, GS4614D-101 to GS4615D-1303, GS4714D-101 to GS4715D-749) 248

Electrical Schematic, GS-3246 / GS-4047, ANSI / CSA (from serial number GS4614A-135367 to GS4615A-137959, GS4615D-1304 to GS4616D-4432, GS4616P-138362 to GS4616P-139710, GS4715D-750 to GS4716D-3101) 252

Electrical Schematic, GS-3246, GS4047 ANSI / CSA (from serial numbers GS4616D-4433, GS4616P-139711, GS4716D-3102, GS4716P-101) 256

https://truckmanualshub.com/

Table of Contents

Electrical Schematics – CE and Australia Models 257

Electrical Schematic GS-1530, 1532, 1930, 1932, (from serial number GS3010A-110000 to GS3011A-110827) AS / CE 258

Electrical Schematic, GS-1530/32_GS-1930/32 (from serial number GS3011A-110828 to GS3014A-136972, GS3011C-10000 to GS3015C-18038, GS3014D-101 to GS3015D-1113) 262

Electrical Schematic, GS-1530, 1532, 1930, 1932, AS/CE (from serial number GS3014A-136973, GS3015C-18039, GS3015D-1114 to GS3016D-5426, GS3016P-142281 to GS3016P-158208).....266

Electrical Schematic, GS-1530, 1532, 1930, 1932, AS/CE (from serial numbers GS3015D-5427, GS3016P-158209) 270

Electrical Schematic, GS-3232, AS / CE (from serial number GS3211A-110000 to GS3214A-135714, GS3212C-10000 to GS3215C-14503) 272

Electrical Schematic, GS-3232, AS / CE (from serial number GS3214A-135715 to GS3215A-141898, GS3215C-14504) 276

Electrical Schematic, GS-3232, AS / CE (from serial numbers GS3215A-141899, GS3216P-142676 to GS3216P-146462).....280

Electrical Schematic, GS-3232, CE / AS (from serial number GS3216P-146463).....284

Electrical Schematic, GS-2032, 2632, 2046, 2646, AS / CE (from serial number GS3211A-110000 to GS3214A-135714, GS3212C-10000 to GS3215C-14377, GS4612A-110000 to GS4614A-135366, GS4612C-10000 to GS4615C-14503, GS4613D-101 to GS4615D-1303) 288

Electrical Schematic, GS-2032, 2632, 2046, 2646, AS/CE (from serial number GS3214A-1135715 to GS3215A-141898, GS3215C-14378, GS4614A-135367 to GS4615A-137959, GS4615C-14504, GS4615D-1304) 292

Electrical Schematic, GS-2032, 2632, 2046, 2646, AS / CE (from serial number GS3215A-141899, GS3216P-142676 to GS3216P-146462, GS4615A-137960, GS4616P-138362 to GS4616P-139710).....296

Electrical Schematic, GS-2032, 2632, 2046, 2646, AS / CE (from serial numbers GS3216P-146463, GS4616P-139711) 300

https://truckmanualshub.com/

Table of Contents

Electrical Schematic, GS-3246, AS / CE (from serial number GS4612A-110000 to GS4614A-135366, GS4612C-10000 to GS4615C-14503, GS4614D-101 to GS4615D-1303) 302

Electrical Schematic, GS-3246, AS / CE (from serial number GS4614A-135367 to GS4615A-137959, GS4615C-14504, GS4615D-1304) 306

Electrical Schematic, GS-3246, AS / CE (from serial number GS4615A-137960, GS4616P-138362 GS4616P to GS4616P-139710) 310

Electrical Schematic, GS-3246, AS / CE (from serial number GS4616D-4433, GS4616P-139711) 314

Electrical Schematic, GS-4047, AS / CE (from serial number GS4712C-101 to GS4715C-2130, GS4714D-101 to GS4715D-749) 316

Electrical Schematic, GS-4047, AS / CE (from serial number GS4715C-2131, GS4715D-750 to GS4716D-3101) 320

Electrical Schematic, GS-4047, AS / CE (from serial number GS4716D-3102) 324

Electrical Schematic – Foot Switch (option) All Models 325

Foot Switch (option) All Models 326

https://truckmanualshub.com/

Specifications

Machine Specifications

Batteries, Standard All models except GS-4047	
Voltage	6V DC
Group	GC2
Type	T-105
Quantity	4
Battery capacity, maximum	C20 = 225AH
Reserve capacity @ 25A rate	447 minutes
Weight, each	62 lbs 28 kg

Batteries, Standard GS-4047	
Voltage	12V DC
Group	GC2
Type	T-1275
Quantity	4
Battery capacity, maximum	C20 = 150AH
Reserve capacity @ 25A rate	280 minutes
Weight, each	82 lbs 37 kg

Batteries, Maintenance-free (option) All models except GS-4047	
Voltage	6V DC
Group	GC2
Type	6V-AGM
Quantity	4
Battery capacity, maximum	200AH
Reserve capacity @ 25A rate	380 minutes
Weight, each	62 lbs 28 kg

Platform Overload Pressure Transducer (if equipped) All models except GS-3232 and GS-4047	
Input voltage	8 to 30 VDC
Signal voltage	1 to 5 V

Platform Overload Pressure Transducer (if equipped) GS-3232 and GS-4047	
Input voltage	8 to 30 VDC
Signal voltage	0.25 to 6.25 V

Angle Sensor (if equipped)	
Input voltage	8 to 30 VDC
Signal voltage	3 to 4 V, PMW output

Outrigger Pressure Transducer, GS-3232 only	
Input voltage	8 to 30 VDC
Signal voltage	1 to 5 V

For operational specifications, refer to the Operator's Manual.

https://truckmanualshub.com/

Specifications

Fluid capacities	
Hydraulic tank All models except GS-4047	3.4 gallons 12.9 liters
Hydraulic tank GS-4047	5.9 gallons 22.4 liters
Hydraulic system (including tank) GS-1530, GS-1532, GS-1930 and GS-1932	3.8 gallons 14.2 liters
Hydraulic system (including tank) GS-2032, GS-2632, GS-2046 and GS-2646	4.5 gallons 17 liters
Hydraulic system (including tank) GS-3232 and GS-3246	5.5 gallons 20.8 liters
Hydraulic system (including tank) GS-4047	7.5 gallons 28.4 liters

Tires and wheels	
GS-1530, GS-1532, GS-1930, GS-1932	
Tire size (solid rubber)	12 x 4.5 in 30.5 x 11.4 cm
Tire contact area	9 sq in 58 cm^2
Castle nut torque, dry	300 ft-lbs 406.7 Nm
Castle nut torque, lubricated	225 ft-lbs 305 Nm
GS-2032, GS-2632, GS-3232, GS-2046, GS-2646, GS-3246, GS-4047	
Tire size (solid rubber)	15 x 5 in 38.1 x 12.7 cm
Tire contact area	15 sq in 96.7 cm^2
Castle nut torque, dry	300 ft-lbs 406.7 Nm
Castle nut torque, lubricated	225 ft-lbs 305 Nm

https://truckmanualshub.com/

Performance Specifications (models without proportional lift)

Drive speed, maximum	
GS-1530, GS-1532, GS-1930, GS-1932	
Platform stowed, fast	2.5 mph 40 ft / 10.9 sec 4 km/h 12.2 m / 10.9 sec
Platform raised	0.5 mph 40 ft / 55 sec 0.8 km/h 12.2 m / 55 sec
GS-2032, GS-2632, GS-3232, GS-2046, GS-2646, GS-3246	
Platform stowed, fast t**o serial number**: GS3216P-145830 GS4616P-139575	2.2 mph 40 ft / 12.4 sec 3.5 km/h 12.2 m / 12.4 sec
Platform stowed, fast **from serial number**: GS3216P-145831 GS4616P-139576	2.0 mph 40 ft / 12.4 sec 3.2 km/h 12.2 m / 12.4 sec
Platform raised	0.5 mph 40 ft / 55 sec 0.8 km/h 12.2 m / 55 sec
GS-4047	
Platform stowed, fast	2.0 mph 40 ft / 13.6 sec 3.2 km/h 12.2 m / 13.6 sec
Platform raised	0.5 mph 40 ft / 55 sec 0.8 km/h 12.2 m / 55 sec
Braking distance, maximum	
High range on paved surface	1 - 3 ft 0.3 - 0.9 m
Gradeability	
GS-1930, GS-1932, GS-2632,GS-3232, GS-3246 and GS-4047	25%
GS-1530, GS-1532, GS-2032, GS-2046 and GS-2646	30%
Airborne noise emissions	
Sound pressure level at ground workstation	< 70 dBA
Sound pressure level at platform workstation	< 70 dBA

https://truckmanualshub.com/

Specifications

Function speed, maximum from platform controls (with 1 person in platform)	
GS-1530 and GS-1532	
Platform up (fast mode)	15 to 17 seconds
Platform up (slow mode)	30 to 32 seconds
Platform down	28 to 30 seconds
GS-1930 and GS-1932	
Platform up (fast mode)	15 to 17 seconds
Platform up (slow mode)	30 to 32 seconds
Platform down	28 to 30 seconds
GS-2032 and GS-2632	
Platform up (fast mode)	28 to 32 seconds
Platform up (slow mode)	58 to 62 seconds
Platform down	32 to 36 seconds
GS-2046 and GS-2646	
Platform up (fast mode)	28 to 32 seconds
Platform up (slow mode)	58 to 62 seconds
Platform down	32 to 36 seconds
GS-3232 and GS-3246	
Platform up (fast mode)	55 to 59 seconds
Platform up (slow mode)	108 to 112 seconds
Platform down	33 to 37 seconds
GS-4047	
Platform up (fast mode)	71 to 76 seconds
Platform up (slow mode)	83 to 87 seconds
Platform down	41 to 46 seconds

Rated work load at full height, maximum	
GS-1530 and GS-1532	600 lbs 272 kg
GS-1930, GS-1932, GS-2632 and GS-3232	500 lbs 227 kg
GS-2032	800 lbs 363 kg
GS-2046	1200 lbs 544 kg
GS-2646	1000 lbs 454 kg
GS-3246	700 lbs 317 kg
GS-4047 (CE and AS models)	770 lbs 350 kg
GS-4047 (ANSI and CSA models)	550 lbs 250 kg

GS-3232 Outrigger leveling capacity, maximum	
Side to side	5°
Front to rear	3°

https://truckmanualshub.com/

Performance Specifications (models with proportional lift)

Drive speed, maximum	
GS-1530, GS-1532, GS-1930, GS-1932	
Platform stowed	2.5 mph 40 ft / 10.9 sec 4 km/h 12.2 m / 10.9 sec
Platform raised	0.5 mph 40 ft / 55 sec 0.8 km/h 12.2 m / 55 sec
GS-2032, GS-2632, GS-3232, GS-2046, GS-2646, GS-3246	
Platform stowed t**o serial number**: GS3216P-145830 GS4616P-139575	2.2 mph 40 ft / 12.4 sec 3.5 km/h 12.2 m / 12.4 sec
Platform stowed **from serial number**: GS3216P-145831 GS4616P-139576	2.0 mph 40 ft / 12.4 sec 3.2 km/h 12.2 m / 12.4 sec
Platform raised	0.5 mph 40 ft / 55 sec 0.8 km/h 12.2 m / 55 sec
GS-4047	
Platform stowed	2.0 mph 40 ft / 13.6 sec 3.2 km/h 12.2 m / 13.6 sec
Platform raised	0.5 mph 40 ft / 55 sec 0.8 km/h 12.2 m / 55 sec
Braking distance, maximum	
High range on paved surface	1 - 3 ft 0.3 - 0.9 m
Gradeability	
GS-1930, GS-1932, GS-2632,GS-3232, GS-3246 and GS-4047	25%
GS-1530, GS-1532, GS-2032, GS-2046 and GS-2646	30%
Airborne noise emissions	
Sound pressure level at ground workstation	< 70 dBA
Sound pressure level at platform workstation	< 70 dBA

https://truckmanualshub.com/

Specifications

Function speed, maximum from platform controls (with 1 person in platform)	
GS-1530 and GS-1532	
Platform up	15 to 17 seconds
Platform down	18 to 25 seconds
GS-1930, 1930PAR and GS-1932	
Platform up	15 to 17 seconds
Platform down	18 to 25 seconds
GS-2032 and GS-2632	
Platform up	28 to 32 seconds
Platform down	24 to 28 seconds
GS-2046 and GS-2646	
Platform up	28 to 32 seconds
Platform down	28 to 32 seconds
GS-3232 and GS-3246	
Platform up	55 to 59 seconds
Platform down	28 to 32 seconds
GS-4047	
Platform up	71 to 76 seconds
Platform down	41 to 46 seconds

Rated work load at full height, maximum	
GS-1530 and GS-1532	600 lbs 272 kg
GS-1930, GS-1932, GS-2632 and GS-3232	500 lbs 227 kg
GS-1930PAR	400 lbs 181 kg
GS-2032	800 lbs 363 kg
GS-2046	1200 lbs 544 kg
GS-2646	1000 lbs 454 kg
GS-3246	700 lbs 317 kg
GS-4047 (CE and AS models)	770 lbs 350 kg
GS-4047 (ANSI and CSA models)	550lbs 250 kg
GS-3232 Outrigger leveling capacity, maximum	
Side to side	5°
Front to rear	3°

https://truckmanualshub.com/

Hydraulic Oil Specifications

Hydraulic Fluid Specifications	
Genie specifications require hydraulic oils which are designed to give maximum protection to hydraulic systems, have the ability to perform over a wide temperature range, and the viscosity index should exceed 140. They should provide excellent antiwear, oxidation prevention, corrosion inhibition, seal conditioning, and foam and aeration suppression properties.	
Cleanliness level, minimum	ISO 15/13
Water content, maximum	250 ppm
Recommended Hydraulic Fluid	
Hydraulic oil type	Chevron Rando HD Premium
Viscosity grade	32
Viscosity index	200
Optional Hydraulic Fluids	
Mineral based	Shell Tellus S2 V 32 Shell Tellus S2 V 46 Shell Tellus S4 VX 32 Shell Shell Donax TG (Dexron III) Chevron 5606A
Biodegradable	Petro Canada Environ MV 46
Fire resistant	UCON Hydrolube HP-5046

Note: Genie specifications require additional equipment and special installation instructions for the approved optional fluids. Consult Genie Product Support before use.

NOTICE Optional fluids may not have the same hydraulic lifespan and may result in component damage.

Note: Extended machine operation can cause the hydraulic fluid temperature to increase beyond it's maximum allowable range. If the hydraulic fluid temperature consistently exceeds 200°F / 90°C an optional oil cooler may be required.

NOTICE Do not top off with incompatible hydraulic fluids. Hydraulic fluids may be incompatible due to the differences in base additive chemistry. When incompatible fluids are mixed, insoluble materials may form and deposit in the hydraulic system, plugging hydraulic lines, filters, control valves and may result in component damage.

Note: Do not operate the machine when the ambient air temperature is consistently above 120°F / 49°C.

Hydraulic Fluid Temperature Range

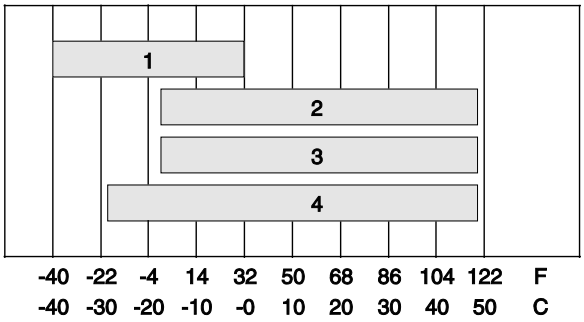

Ambient air temperature

1 Chevron hydraulic oil 5606A
2 Petro-Canada Environ MV 46
3 UCON Hydrolube HP-5046D
4 Chevron Rando HD premium oil MV

https://truckmanualshub.com/

Specifications

Chevron Rando HD Premium Oil MV Fluid Properties

ISO Grade	32
Viscosity index	200
Kinematic Viscosity cSt @ 200°F / 100°C cSt @ 104°F / 40°C	 7.5 33.5
Brookfield Viscosity cP @ -4°F / -20°C cP @ -22°F / -30°C	 1040 3310
Flash point	375°F / 190°C
Pour point	-58°F / -50°C
Maximum continuous operating temperature	171°F / 77°C

Note: A hydraulic oil heating system is recommended when the ambient temperature is consistently below 0°F / -18°C.

Note: Do not operate the machine when the ambient temperature is below -20°F / -29°C with Rando HD Premium MV.

Chevron 5606A Hydraulic Oil Fluid Properties

ISO Grade	15
Viscosity index	300
Kinematic Viscosity cSt @ 200°F / 100°C cSt @ 104°F / 40°C cSt @ -40°F / -40°C	 5.5 15.0 510
Flash point	180°F / 82°C
Pour point	-81°F / -63°C
Maximum continuous operating temperature	124°F / 51°C

Note: Use of Chevron 5606A hydraulic fluid, or equivalent, is required when ambient temperatures are consistently below 0°F / -17°C unless an oil heating system is used.

NOTICE Continued use of Chevron 5606A hydraulic fluid, or equivalent, when ambient temperatures are consistently above 32°F / 0°C may result in component damage

https://truckmanualshub.com/

Petro-Canada Environ MV 46 Fluid Properties

ISO Grade	46
Viscosity index	154
Kinematic Viscosity cSt @ 200°F / 100°C cSt @ 104°F / 40°C	 8.0 44.4
Flash point	482°F / 250°C
Pour point	-49°F / -45°C
Maximum continuous operating temperature	180°F / 82°C

Shell Tellus S4 VX Fluid Properties

ISO Grade	32
Viscosity index	300
Kinematic Viscosity cSt @ 200°F / 100°C cSt @ 104°F / 40°C	 9 33.8
Brookfield Viscosity cSt @ -4°F / -20°C cSt @ -13°F / -25°C cSt @ -40°F / -40°C	 481 702.4 2624
Flash point	>100
Pour point	-76°F / -60°C
Maximum continuous operating temperature	103°F / 75°C

UCON Hydrolube HP-5046 Fluid Properties

ISO Grade	46
Viscosity index	192
Kinematic Viscosity cSt @ 149°F / 65°C cSt @ 104°F / 40°C cSt @ 0°F / -18°C	 22 46 1300
Flash point	None
Pour point	-81°F / -63°C
Maximum continuous operating temperature	189°F / 87°C

https://truckmanualshub.com/

Specifications

Hydraulic Component Specifications

Function pump – GS-1530, GS1532, GS-1930 and GS-1932	
Type	Gear
Displacement per revolution	0.244 cu in 4 cc
Flow rate @ 2500 psi / 172 bar	3 gpm 11.3 L/min
Hydraulic tank return filter	10 micron with 25 psi / 1.7 bar bypass

Function pump – GS-2032, GS-2632, GS-3232, GS-2046, GS-2646, GS-3246 and GS-4047	
Type	Gear
Displacement per revolution	0.355 cu in 5.5 cc
Flow rate @ 2500 psi / 172 bar	4 gpm 15 L/min
Hydraulic tank return filter	10 micron with 25 psi / 1.7 bar bypass

Function manifold – All models except GS-4047	
System relief valve pressure, maximum	3700 psi 255 bar
Lift relief valve pressure	1800 to 3700 psi 142 to 241 bar
Steer relief valve pressure	1500 psi 103 bar

Function manifold – GS-4047	
System relief valve pressure, maximum	3500 psi 241 bar
Platform relief valve pressure	3000 psi 206 bar
Steer relief valve pressure	1500 psi 103 bar

Outrigger manifold	
Relief valve pressure, maximum	3500 psi 241 bar

Check valve manifold - GS-1530, GS-1532, GS-1930. GS-1932	
Check valve pressure, maximum	200 psi 13.8 bar

Lift pressure selector manifold - GS-4047	
Platform relief valve pressure, maximum	2000 psi 138 bar

https://truckmanualshub.com/

Manifold Component Specifications

Plug torque	
SAE No. 2	50 in-lbs / 6 Nm
SAE No. 4	13 ft-lbs / 18 Nm
SAE No. 6	18 ft-lbs / 24 Nm
SAE No. 8	50 ft-lbs / 68 Nm
SAE No. 10	55 ft-lbs / 75 Nm
SAE No. 12	75 ft-lbs / 102 Nm

Valve coil resistance

Note: The following coil resistance specifications are at an ambient temperature of 68°F / 20°C. As valve coil resistance is sensitive to change in air temperature, the coil resistance will typically increase or decrease by 4% of each 18°F / -7.7°C that your air temperature increases or decreases from 68°F / 20°C.

Description	Specification
Solenoid valve, 3 position 4 way, 20V DC with diode (schematic items F, AC or DC)	27.2Ω
Solenoid valve, 3 position 4 way, 20V DC with diode (schematic item E)	19Ω
Solenoid valve, 2 position 4 way, 20V DC with diode (schematic items H, AI or DI)	19Ω
Solenoid valve, 2 position 2 way, N.C. 20V DC with diode (schematic item N)	25Ω
Solenoid valve, 2 position 4 way, 20V DC with diode (schematic item AE or DE)	19Ω
Solenoid valve, 3 position 5 way, 20V DC with diode (schematic item AG or DG)	19Ω
Solenoid valve, 2 position 2 way, 20V DC with diode (schematic items CA, CB, CC and CD)	27.2Ω
Solenoid valve, 3 position 4 way, 20V DC with diode (schematic item BA)	19Ω
Solenoid valve, 2 position 2 way, 20V DC with diode (schematic item DN)	23.9Ω

https://truckmanualshub.com/

Specifications

Hydraulic Hose and Fitting Torque Specifications

Your machine is equipped with Parker Seal-Lok™ ORFS or 37° JIC fittings and hose ends. Genie specifications require that fittings and hose ends be torqued to specification when they are removed and installed or when new hoses or fittings are installed.

Seal-Lok™ Fittings

(hose end - ORFS)

SAE Dash Size	Torque
-4	10 ft-lbs / 13.6 Nm
-6	30 ft-lbs / 40.7 Nm
-8	40 ft-lbs / 54.2 Nm
-10	60 ft-lbs / 81.3 Nm
-12	85 ft-lbs / 115 Nm
-16	110 ft-lbs / 150 Nm
-20	140 ft-lbs / 190 Nm
-24	180 ft-lbs / 245 Nm

JIC 37° Fittings

(swivel nut or hose connection)

SAE Dash Size	Thread Size	Flats
-4	7/16-20	2
-6	9/16-18	1 ¼
-8	3/4-16	1
-10	7/8-14	1
-12	1 1/16-12	1
-16	1 5/16-12	1
-20	1 5/8-12	1
-24	1 7/8-12	1

SAE O-ring Boss Port

(tube fitting - installed into Aluminum)
(all types)

SAE Dash Size	Torque
-4	14 ft-lbs / 19 Nm
-6	23 ft-lbs / 31.2 Nm
-8	36 ft-lbs / 54.2 Nm
-10	62 ft-lbs / 84 Nm
-12	84 ft-lbs / 114 Nm
-16	125 ft-lbs / 169.5 Nm
-20	151 ft-lbs / 204.7 Nm
-24	184 ft-lbs / 249.5 Nm

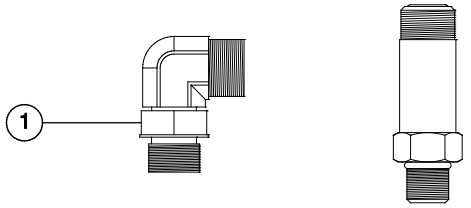

Adjustable Fitting

Non-adjustable fitting

1 jam nut

SAE O-ring Boss Port

(tube fitting - installed into Steel)

SAE Dash Size		Torque
-4	ORFS / 37° (Adj) ORFS (Non-adj) 37° (Non-adj)	15 ft-lbs / 20.3 Nm 26 ft-lbs / 35.3 Nm 22 ft-lbs / 30 Nm
-6	ORFS (Adj / Non-adj) 37° (Adj / Non-adj)	35 ft-lbs / 47.5 Nm 29 ft-lbs / 39.3 Nm
-8	ORFS (Adj / Non-adj) 37° (Adj / Non-adj)	60 ft-lbs / 81.3 Nm 52 ft-lbs / 70.5 Nm
-10	ORFS (Adj / Non-adj) 37° (Adj / Non-adj)	100 ft-lbs / 135.6 Nm 85 ft-lbs / 115.3 Nm
-12	(All types)	135 ft-lbs / 183 Nm
-16	(All types)	200 ft-lbs / 271.2 Nm
-20	(All types)	250 ft-lbs / 339 Nm
-24	(All types)	305 ft-lbs / 413.5 Nm

https://truckmanualshub.com/

Torque Procedure

Seal-Lok™ fittings

1 Replace the O-ring. The O-ring must be replaced anytime the seal has been broken. The O-ring cannot be re-used if the fitting or hose end has been tightened beyond finger tight.

Note: The O-ring in Parker Seal Lok™ fittings and hose end are custom-size O-rings. They are not standard size O-rings. They are available in the O-ring field service kit (Genie part number 49612).

2 Lubricate the O-ring before installation.

3 Be sure the O-ring face seal is seated and retained properly.

4 Position the tube and nut squarely on the face seal end of the fitting, and tighten the nut finger tight.

5 Tighten the nut or fitting to the appropriate torque. Refer to the appropriate torque chart in this section.

6 Operate all machine functions and inspect the hose, fittings and related components to confirm there are no leaks.

JIC 37° fittings

1 Align the tube flare (hex nut) against the nose of the fitting body (body hex fitting) and tighten the hex nut to the body hex fitting to hand tight, approximately 30 in-lbs / 3.4 Nm.

2 Using a permanent ink marker, make a reference mark on one the flats of the hex nut and continue the mark onto the body of the hex fitting. Refer to Illustration 1.

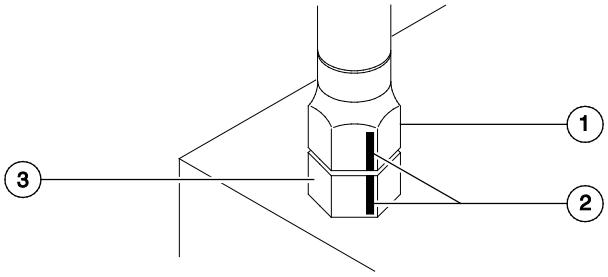

Illustration 1

1 hex nut
2 reference mark
3 body hex fitting

https://truckmanualshub.com/

Specifications

3 Working clockwise on the body hex fitting, make a second mark with a permanent ink marker to indicate the proper tightening position. Refer to Illustration 2.

Note: Use the JIC 37° Fitting table in this section to determine the correct number of flats, for the proper tightening position.

Note: The marks indicate the correct tightening positions have been determined. Use the second mark on the body hex fitting to properly tighten the joint after it has been loosened.

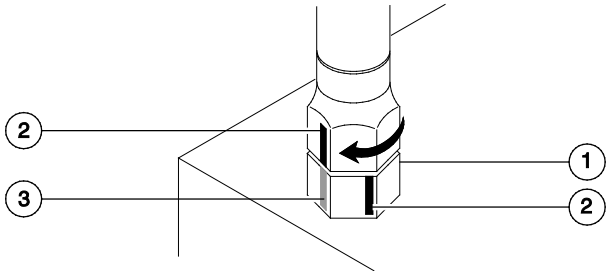

Illustration 2

1 body hex fitting
2 reference mark
3 second mark

4 Tighten the hex nut until the mark on the hex nut is aligned with the second mark on the body hex fitting.

5 Operate all machine functions and inspect the hose, fittings and related components to confirm there are no leaks.

https://truckmanualshub.com/

Repair Procedures

Observe and Obey:

☑ Repair procedures shall be completed by a person trained and qualified on the repair of this machine.

☑ Immediately tag and remove from service a damaged or malfunctioning machine.

☑ Repair any machine damage or malfunction before operating the machine.

Before Repairs Start:

☑ Read, understand and obey the safety rules and operating instructions in the appropriate operator's manual on your machine.

☑ Be sure that all necessary tools and parts are available and ready for use.

☑ Use only Genie approved replacement parts.

☑ Read each procedure completely and adhere to the instructions. Attempting shortcuts may produce hazardous conditions.

Machine Configuration:

☑ Unless otherwise specified, perform each repair procedure with the machine in the following configuration:

- Machine parked on a firm, level surface
- Key switch in the off position with the key removed
- The red Emergency Stop button in the off position at both the ground and platform controls
- Wheels chocked
- All external AC power supply disconnected from the machine
- Platform in the stowed position

https://truckmanualshub.com/

Repair Procedures

About This Section

Most of the procedures in this section should only be performed by trained service professional in a suitably equipped workshop. Select the appropriate repair procedure after troubleshooting the problem.

Perform disassembly procedures to the point where repairs can be completed. Then to re-assemble, perform the disassembly steps in reverse order.

Symbols Legend

Safety alert symbol—used to alert personnel to potential personal injury hazards. Obey all safety messages that follow this symbol to avoid possible injury or death.

DANGER Indicates a imminently hazardous situation which, if not avoided, will result in death or serious injury.

WARNING Indicates a potentially hazardous situation which, if not avoided, could result in death or serious injury.

CAUTION Indicates a potentially hazardous situation which, if not avoided, may cause minor or moderate injury.

NOTICE Indicates a potentially hazardous situation which, if not avoided, may result in property damage.

⊙ Indicates that a specific result is expected after performing a series of steps.

⊠ Indicates that an incorrect result has occurred after performing a series of steps.

https://truckmanualshub.com/

Platform Controls

The platform controls are used to operate the machine from the platform.

Activating a function button sends a signal to the Electronic Control Module (ECM). When the ECM is in the function mode, the platform controls are used to operate the various machine functions.

The platform controls consist of an Emergency Stop button, electronic circuit board, proportional control handle, drive/steer enable switch, alarm, function buttons and LED display.

For further information or assistance, contact Genie Product Support.

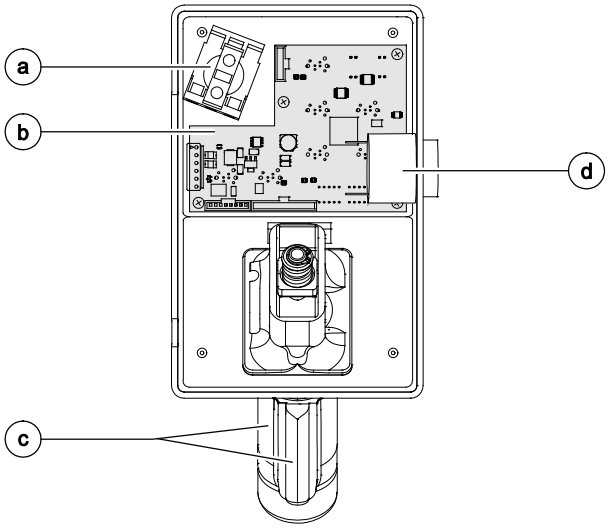

a red Emergency Stop button P2
b platform controls circuit board U3
c proportional control handle and drive/steer enable switch JC9
d alarm H1

https://truckmanualshub.com/

Platform Controls

Operational Indicator Codes

These codes are generated by the electrical system to indicate machine operating status. During normal operation, a code will appear in the platform controls LED readout if a condition such as off-level, overload cutout, chassis mode operation or pothole guard stuck occurs.

If the platform controls LED readout displays an operational indicator code such as LL, the fault condition must be repaired or removed before resuming machine operation. Push in and pull out the red Emergency Stop button to reset the system.

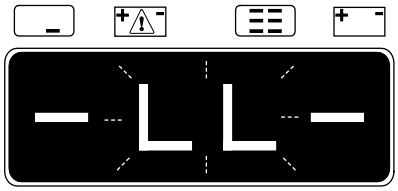

Platform Controls LED Readout

Code	Condition
LL	Off-level
OL	Platform Overload (CE and Australia)
CH	Chassis Mode Operation
PHS	Pothole Guard Stuck
nd	No Drive (option)
Ld	Lifting Disabled (GS-3232 only)

Note: The **Ld** Operation Indicator Code will appear when the outriggers are not fully retracted, the machine is not auto leveled, an outrigger has lost contact with the ground or either level sensor detects the machine is no longer level. When any of the above scenarios occur, the lift function is disabled.

The lift function will also be disabled while extending or retracting the outriggers and during the outrigger auto level procedure. While performing the above operations, the **Ld** Operation Indicator Code will appear.

Note: A code and a description of a code can also be viewed at the ground controls LCD display.

https://truckmanualshub.com/

1-1
Circuit Board

How to Remove the Platform Controls Circuit Board

1 Push in the red Emergency Stop button to the off position at both the ground and platform controls.

2 Disconnect the platform controls from the control cable at the platform.

3 Remove the fasteners securing the platform control box to the platform control bracket.

4 Remove the fasteners securing the bottom cover to the platform control box. Open the control box.

5 Remove the ties securing the wire harness.

6 Disconnect the red and black wires from the alarm.

7 Carefully remove the alarm from the platform control box.

8 Carefully disconnect all wire harness connectors from the platform controls circuit board.

WARNING Electrocution/burn hazard. Contact with electrically charged circuits could result in death or serious injury. Remove all rings, watches and other jewelry.

NOTICE Component damage hazard. Electrostatic discharge (ESD) can damage printed circuit board components. Maintain firm contact with a metal part of the machine that is grounded at all times when handling printed circuit boards OR use a grounded wrist strap.

9 Carefully remove the platform controls circuit board fasteners.

10 Carefully remove the platform controls circuit board from the platform control box.

11 Remove the transparent caps from the platform controls circuit board and save.

Circuit board fastener torque specifications	
Hand tighten until screws seat	< 5 in-lbs < 0.6 Nm

Note: Before installing a circuit board, place the transparent caps removed in step 11, over the circuit board buttons.

Note: After installing the circuit board, check for proper button operation. Excessive torque of the circuit board fasteners will cause the buttons to bind. Moderate torque of the circuit board fasteners will not allow the buttons to engage.

https://truckmanualshub.com/

Platform Controls

1-2 Joystick

How to Remove the Joystick

1 Push in the red Emergency Stop button to the off position at both the ground and platform controls.

2 Disconnect the platform controls from the control cable at the platform.

3 Remove the fasteners securing the platform control box to the platform control bracket.

4 Remove the fasteners securing the bottom cover to the platform control box. Open the control box.

5 Remove the ties securing the joystick wire harness.

6 Carefully disconnect the joystick wire harness from the platform controls circuit board.

WARNING Electrocution/burn hazard. Contact with electrically charged circuits could result in death or serious injury. Remove all rings, watches and other jewelry.

NOTICE Component damage hazard. Electrostatic discharge (ESD) can damage printed circuit board components. Maintain firm contact with a metal part of the machine that is grounded at all times when handling printed circuit boards OR use a grounded wrist strap.

7 Carefully remove the joystick fasteners.

8 Carefully remove the joystick from the platform control box.

Torque specifications	
Joystick fasteners	9 in-lbs 1 Nm

1-3 Platform Controls Alarm

How to Remove the Platform Controls Alarm

1 Push in the red Emergency Stop button to the off position at both the ground and platform controls.

2 Disconnect the platform controls from the control cable at the platform.

3 Remove the fasteners securing the platform control box to the platform control bracket.

4 Remove the fasteners securing the bottom cover to the platform control box. Open the control box.

5 Disconnect the red and black wires from the alarm.

WARNING Electrocution/burn hazard. Contact with electrically charged circuits could result in death or serious injury. Remove all rings, watches and other jewelry.

NOTICE Component damage hazard. Electrostatic discharge (ESD) can damage printed circuit board components. Maintain firm contact with a metal part of the machine that is grounded at all times when handling printed circuit boards OR use a grounded wrist strap.

6 Carefully remove the alarm from the platform control box.

https://truckmanualshub.com/

1-4
Platform Emergency Stop Button

How to Remove the Platform Controls Emergency Stop Button

1 Push in the red Emergency Stop button to the off position at both the ground and platform controls.

2 Disconnect the platform controls from the control cable at the platform.

3 Remove the fasteners securing the platform control box to the platform control bracket.

4 Remove the fasteners securing the bottom cover to the platform control box. Open the control box.

5 Disconnect the white wires from the Emergency Stop base.

WARNING Electrocution/burn hazard. Contact with electrically charged circuits could result in death or serious injury. Remove all rings, watches and other jewelry.

NOTICE Component damage hazard. Electrostatic discharge (ESD) can damage printed circuit board components. Maintain firm contact with a metal part of the machine that is grounded at all times when handling printed circuit boards OR use a grounded wrist strap.

6 Carefully remove the Emergency Stop base from the Emergency Stop button.

7 Carefully remove the retaining ring from the Emergency Stop button.

8 Carefully remove the Emergency Stop button from the platform control box.

https://truckmanualshub.com/

Ground Controls

The ground controls, used to operate the machine from the ground, can also be used to tune the performance of the machine.

The ground controls consist of an Electronic Control Module (ECM), emergency stop button, key switch and circuit breaker.

Activating the function enable button and the up or down at the same time, sends a signal to the (ECM). This allows the platform to be raised or lowered at the ground controls.

Note: Steer and drive functions are not available at the ground controls.

When the ECM is in the set up mode, the ground controls are used to adjust the function speed parameters, machine models, or machine options.

For further information or assistance, contact Genie Product Support.

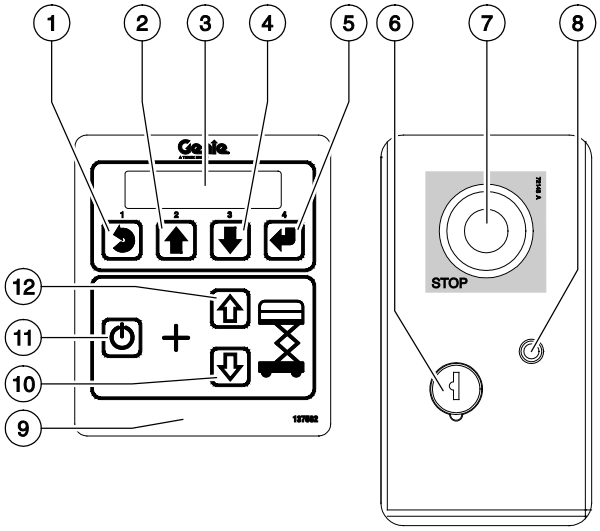

1 machine setup escape button
2 machine setup scroll up button
3 LCD readout
4 machine setup scroll down button
5 machine setup enter button
6 Key switch KS1
7 red Emergency Stop P1
8 circuit breaker CB2
9 ECM U5
10 platform down button
11 lift function enable button
12 platform up button

https://truckmanualshub.com/

2-1
Software Revision Level

How to Determine the Revision Level

The machine software revision level is displayed at the ground controls LCD display.

1 Turn the key switch to the ground controls or platform controls position. Pull out the red Emergency Stop button to the on position at both ground and platform controls.

⊙ Result: The display at the platform controls will show "CH". See example below.

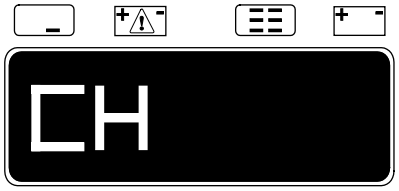

⊙ Result: The display at the ground controls will show the machine model and hour meter information. After 3 seconds, the machine model will not show on the display. See example below.

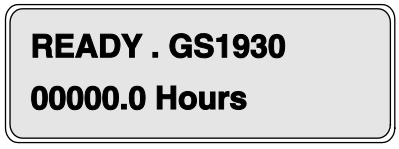

2 Press the ground control scroll down button.

⊙ Result: The ground control LCD display will indicate the software revision and hour meter information. After 5 seconds, the ground controls LCD display will display machine model and hour meter information again. See example below.

3 Push in the red Emergency Stop button to the off position at both the ground and platform controls and turn the key switch to the off position.

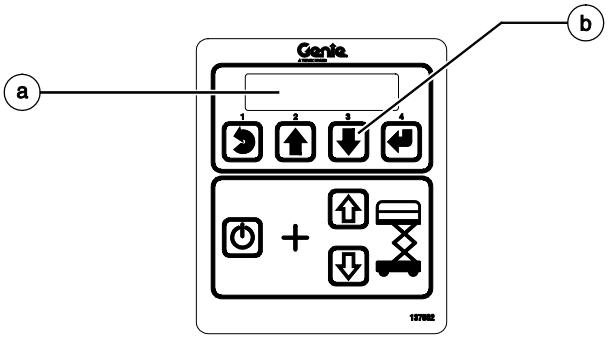

a ground control LCD display
b ground control scroll down button

https://truckmanualshub.com/

Ground Controls

2-2 Machine Setup

How to Setup the Machine from Ground Controls

The ground controls can be used to setup the machine parameters from the ground. Features that can be adjusted from the ground controls include machine Model, Options and Speed setup. This menu can only be entered from ground controls with the key switch in the ground controls position.

DANGER Tip-over hazard. Do not adjust function speeds higher than specified in this procedure. Setting the function speeds greater than specifications could cause the machine to tip over resulting in death or serious injury.

DANGER Tip-over hazard. This procedure must only be performed by a trained service professional. Attempting this procedure without the necessary skills could result in death or serious injury.

Note: Select a test area that is firm, level and free of obstructions.

1 Turn the key switch to ground controls.

2 Press and hold the ground control scroll up and scroll down buttons.

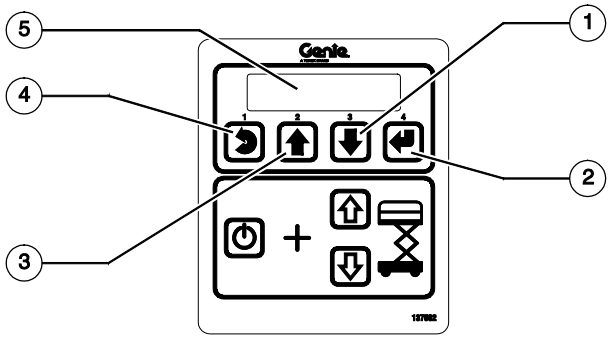

Ground Control Menu Buttons

1 scroll down button
2 enter button
3 scroll up button
4 escape button
5 LCD display

3 Pull out the red Emergency Stop button to the on position at the ground controls.

⊙ Result: The ground controls LCD display will show the following:

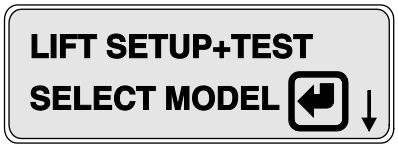

4 Use the ground control menu buttons to select machine Model, Options and Speed Setup parameters. Follow the menu structure indicated on the ground control LCD display.

https://truckmanualshub.com/

2-3 Loading or Updating Machine Software

Note: Before updating the machine software, open a web browser and navigate to the following location for the Genie Machine Software Download portal, http://firmware.genielift.com. Perform a search by applying the appropriate filters and download the machine software.

Note: There are two procedures available to update the machine software. These are **Bootloader Mode** and **Machine Application Mode**.

Bootloader Mode: The Bootloader mode is only available with the key switch in the GCON position. It allows the user to update or reinstall the machine software by directing the system into the Bootloader.

Choose this mode if the GCON ECM is not opertaing correctly.

Machine Application Mode: The machine Application mode is available with the key switch in the GCON or PCON position. This mode of machine software update requires the user to enter the Machine Service Tool.

Choose this mode if the machine is operating correctly and you are updating the machine software.

Bootloader Mode

1 Open the GCON compartment.

Note: Some models will require opening the ground control box to access the GCON.

2 Turn the key switch to the ground controls position and pull out the red Emergency Stop button to the on position at the platform controls.

3 At the ground controls, press and hold the Enter and Escape buttons.

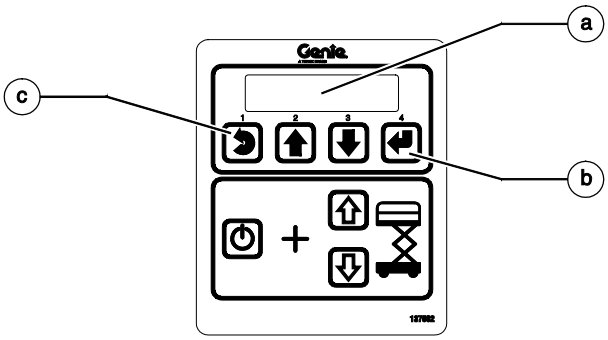

a LCD display
b enter button
c escape button

4 Pull out the red Emergency Stop button to the on position at the ground controls.

⊙ Result: The ground controls LCD display will show the following:

SOFTWARE UPDATE
CONNECT ETHERNET

https://truckmanualshub.com/

Ground Controls

5 Locate the diagnostic port on the side of the GCON. Remove one of the fasteners securing the cover and set aside. Loosen the other fastener. Do not remove it.

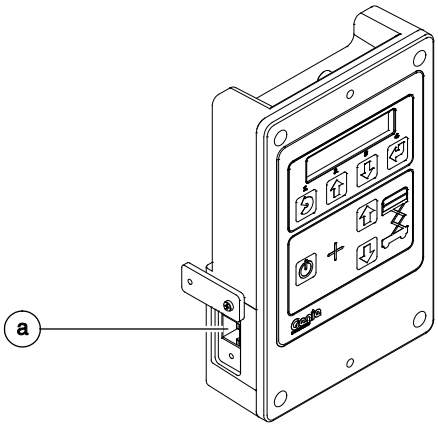

a diagnostic port

6 Connect one end of a CAT5 Ethernet cable into the diagnostic port. Connect the other end into a PC or laptop.

⊙ Result: The ground controls LCD display will show the following:

OPEN WEB BROWSER
<IP ADDRESS>

7 Read and record the IP address.

8 Launch a web browser such as Internet Explorer ®, Chrome ® or Firefox ® on your PC or laptop. Type the IP address from step 7 into the web browser address bar and press enter.

⊙ Result: The following screen will be displayed.

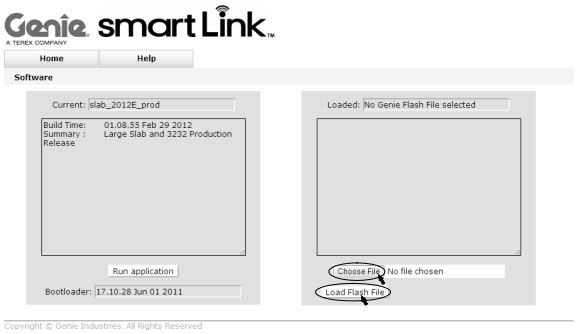

9 Select the **Choose File** button and navigate to the downloaded Genie Flash file (.gff).

Note: Verify it is the correct flash file.

10 Select the **Load Flash File** button to verify the file is a .gff file.

⊙ Result: The following screen will be displayed.

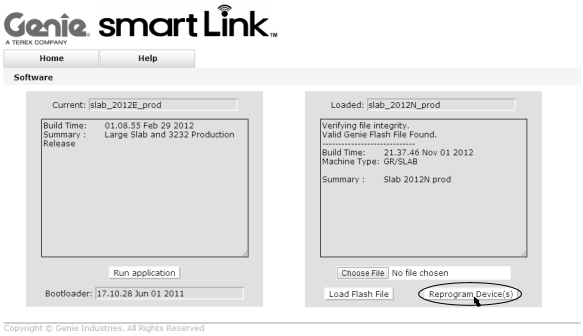

https://truckmanualshub.com/

11 Select the **Reprogram Device**(s) button to start the ECM software update.

⊙ Result: The following screen will be displayed after the software update is complete.

Note: Do not turn off power while the ECM is being reprogrammed.

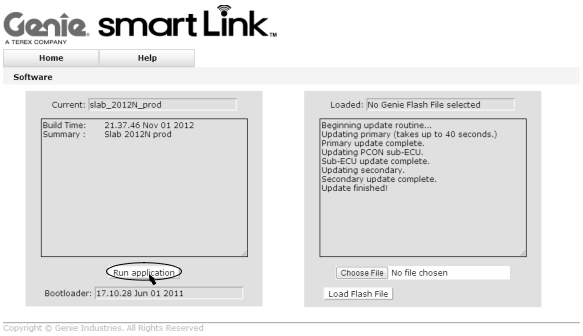

12 Select the **Run Application** button to exit the software update mode.

13 Push in the red Emergency Stop button and disconnect the CAT5 cable from the GCON.

14 Secure the diagnostic port cover using the retaining fasteners removed in step 5. Do not over tighten.

Note: Machines equipped with AGM batteries will need to select the AGM battery type using the GCON set parameters screen. Refer to the *Machine Setup* procedure in the Service and Repair manual that is appropriate for your machine.

⚠WARNING Tip over hazard. Updating the SmartLink software may have impacted the machines default drive speeds. Tipping over the machine will result in death or serious injury.

Perform drive speed test. Refer to the *Maintenance Manual* that is appropriate for your machine.

15 Perform a function test. Refer to the Operator's Manual on your machine.

16 Return the machine to service.

Machine Application Mode

1 Open the GCON compartment.

Note: Some models will require opening the ground control box to access the GCON.

2 Turn the key switch to ground controls or platform controls and pull out the red Emergency Stop button to the on position at both ground and platform controls.

3 Locate the diagnostic port on the side of the GCON. Remove one of the fasteners securing the cover and set aside. Loosen the other fastener. Do not remove it.

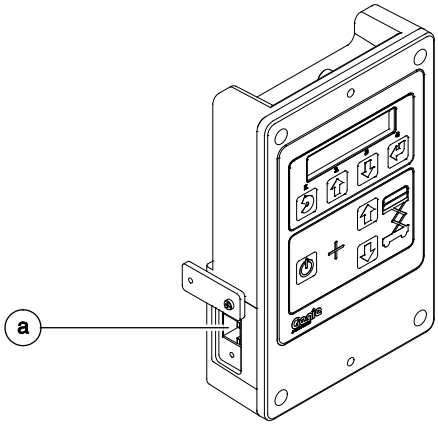

a diagnostic port

4 Connect one end of a CAT5 Ethernet cable into the diagnostic port. Connect the other end into a PC or laptop.

⊙ Result: The ground controls LCD display will show the following:

OPEN WEB BROWSER
<IP ADDRESS>

https://truckmanualshub.com/

Ground Controls

5 Read and record the IP address.

Note: The display wil only show the IP address for 3 seconds. Press the scroll up button to display the IP address for another 3 seconds.

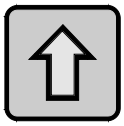

6 Launch a web browser such as Internet Explorer ®, Chrome ® or Firefox ® on your PC or laptop. Type the IP address from step 5 into the web browser address bar and press enter.

⊙ Result: The following screen will be displayed.

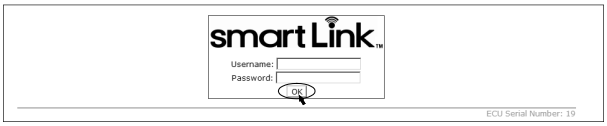

7 Enter the following username and password then select **OK**.

Username: smart.link

Password: SL1000

Note: The username and password are case sensitive.

⊙ Result: The following screen will be displayed.

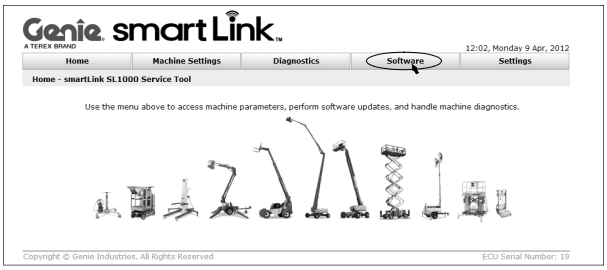

8 Select the **Software** tab at the header bar.

⊙ Result: The following screen will be displayed.

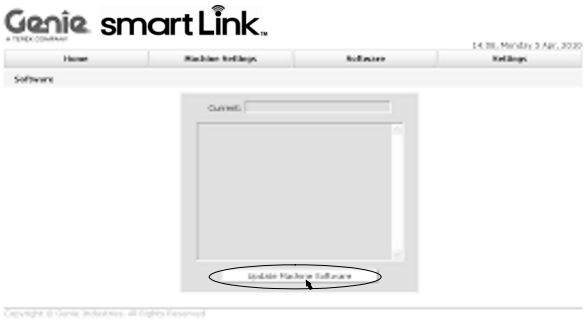

9 Select the **Update Machine Software** button.

⊙ Result: The following screen will be displayed.

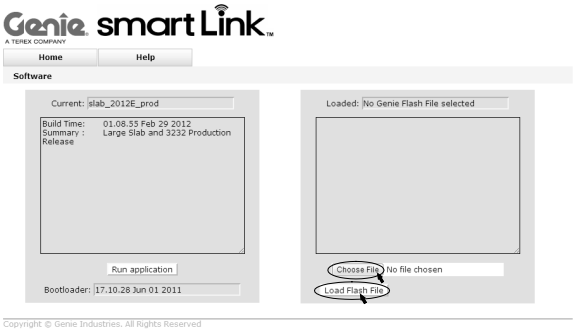

10 Select the **Choose File** button and navigate to the downloaded Genie Flash file (.gff).

Note: Verify it is the correct flash file.

https://truckmanualshub.com/

11 Select the **Load Flash File** button to verify the file is a .gff file.

⊙ Result: The following screen will be displayed.

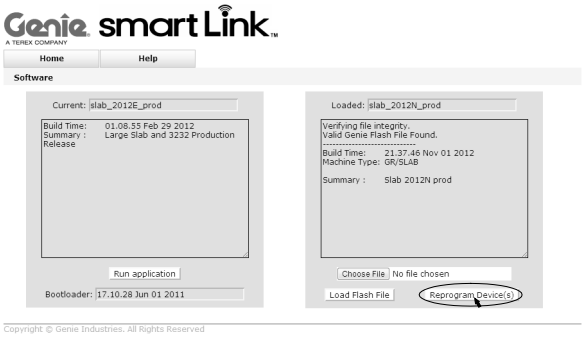

12 Select the **Reprogram Device**(s) button to start the ECM software update.

⊙ Result: The following screen will be displayed after the software update is complete.

Note: Do not turn off power while the ECM is being reprogrammed.

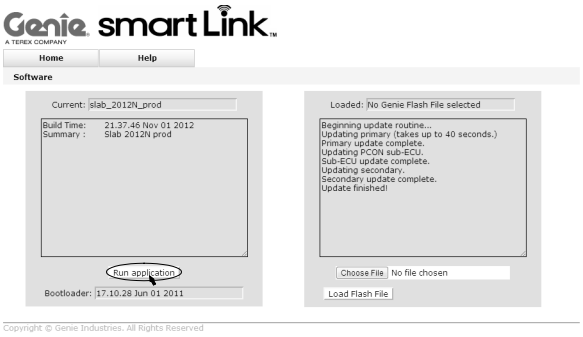

13 Select the **Run Application** button to exit the software update mode.

14 Push in the red Emergency Stop button and disconnect the CAT5 cable from the GCON.

15 Secure the diagnostic port cover using the retaining fasteners removed in step 5. Do not over tighten.

Note: Machines equipped with AGM batteries will need to select the AGM battery type using the GCON set parameters screen. Refer to the *Machine Setup* procedure in the Service and Repair manual that is appropriate for your machine.

⚠WARNING Tip over hazard. Updating the SmartLink software may have impacted the machines default drive speeds. Tipping over the machine will result in death or serious injury.

Perform drive speed test. Refer to the *Maintenance Manual* that is appropriate for your machine.

16 Perform a function test. Refer to the Operator's Manual on your machine.

17 Return the machine to service.

https://truckmanualshub.com/

Ground Controls

2-4 Using a Wi-Fi Router to Connect to the SmartLink Web Service Tool

Note: Before using a portable wireless router to connect to the Smart Link Service Tool web site, the router must be configured to the type of connection desired. Refer to the portable wireless router users manual for set-up and configuration instructions.

1 Open the GCON compartment.

Note: Some models will require opening the ground control box to access the GCON.

2 Turn the key switch to ground controls or platform controls and pull out the red Emergency Stop button to the on position at both ground and platform controls.

⊙ Result: The display at the platform controls will show "CH". See example below.

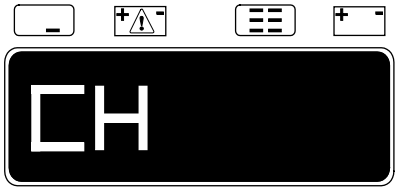

3 Locate the diagnostic port on the side of the GCON. Remove one of the fasteners securing the cover and set aside. Loosen the other fastener. Do not remove it.

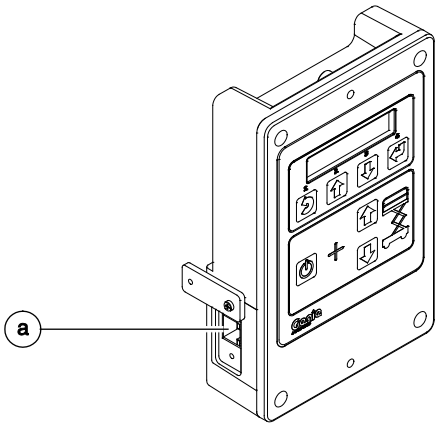

a diagnostic port

4 Connect one end of a CAT5 Ethernet cable into the diagnostic port. Connect the other end into the ethernet port of the portable wireless router.

⊙ Result: The ground controls LCD display will show the following:

OPEN WEB BROWSER
<IP ADDRESS>

https://truckmanualshub.com/

5 Read and record the IP address.

Note: The display wil only show the IP address for 3 seconds. Press the scroll up button to display the IP address for another 3 seconds.

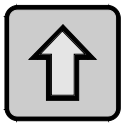

6 On a PC, laptop or mobile device, set up a wireless network for the portable router.

Note: Refer to the Operating System's procedure for connecting to a wireless network.

7 After establishing a new wireless network, select the appropriate network your portable wireless router.

Note: Refer to the Operating System's procedure for connecting to a wireless network.

8 Launch a web browser such as Internet Explorer ®, Chrome ® or Firefox ® on your PC, laptop or mobile device. Type the IP address from step 5 into the web browser address bar and press enter.

⊙ Result: The following screen will be displayed.

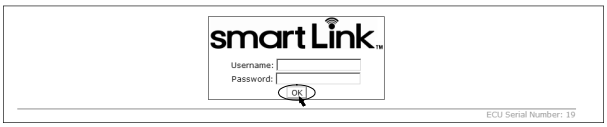

9 Enter the following username and password then select **OK**.

Username: smart.link

Password: SL1000

Note: The username and password are case sensitive.

⊙ Result: The following screen will be displayed.

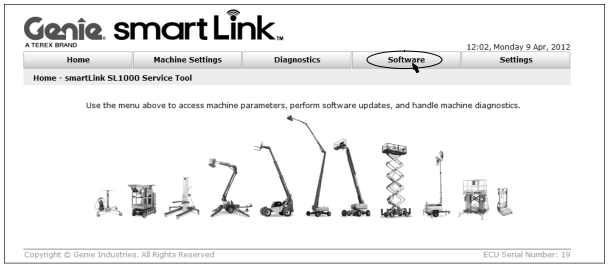

10 After using the Smart Link Service Tool web site, push in the red Emergency Stop button and disconnect the CAT5 cable from the GCON.

11 Secure the diagnostic port cover using the retaining fasteners removed in step 3. Do not over tighten.

Note: Machines equipped with AGM batteries will need to select the AGM battery type using the GCON set parameters screen. Refer to the *Machine Setup* procedure in the Service and Repair manual that is appropriate for your machine.

⚠WARNING Tip over hazard. Updating the SmartLink software may have impacted the machines default drive speeds. Tipping over the machine will result in death or serious injury.

Perform drive speed test. Refer to the *Maintenance Manual* that is appropriate for your machine.

12 Perform a function test. Refer to the Operator's Manual on your machine.

https://truckmanualshub.com/

Ground Controls

2-5 Service Override Mode

The Electronic Control Module (ECM) is programmed with a Service Override mode. Service Override mode is only indented for certain circumstances and is not part of the normal machine operation. Service Override mode should only be accessed by trained personal to repair faults and/ or a malfunctioning machine.

Note: Service Override mode can only be entered at the ground controls and is intended to allow the platform to be raised or lowered. Once the platform has reached the maximum allowable height, the system will exit Service Override mode. Repeat this procedure to lower the platform.

Note: When in Service Override mode, an audible alarm will sound.

Note: Before entering Service Override mode, fault codes or the malfunction affecting the operation of the machine should be fully understood to ensure Service Override mode is required.

Note: Perform this operation on a firm, level surface and if equipped, with the outriggers auto leveled or fully retracted.

DANGER Tip-over hazard. Operating the machine on a surface that is not level while in Service Override mode will result in death or serious injury. Follow proper operating procedures and safety precautions. Do not use Service Override mode if you are not trained and familiar with the operation of the machine.

1 Turn the key switch to the ground controls position and pull out the red Emergency Stop button to the on position at the platform controls.

2 Press and hold the ground control scroll up and scroll down buttons.

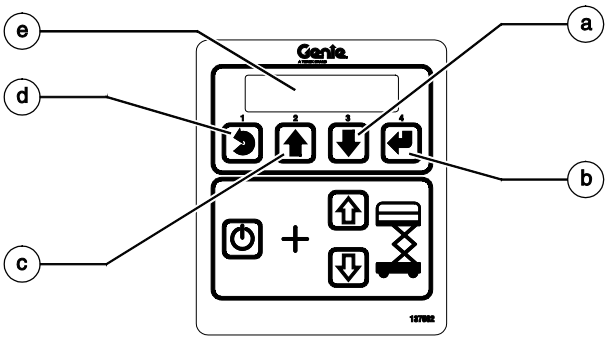

Ground Control Menu Buttons

a scroll down button
b enter button
c scroll up button
d escape button
e LCD display

https://truckmanualshub.com/

3 Pull out the red Emergency Stop button to the on position at the ground controls.

⊙ Result: The ground controls LCD display will show the following:

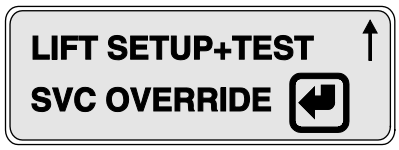

4 Release the Scroll Up and Scroll Down buttons after the ground controller powers up.

5 At the ground controls, use the Scroll Down button to scroll to **SVC Override**.

⊙ Result: The ground controls LCD display will show the following:

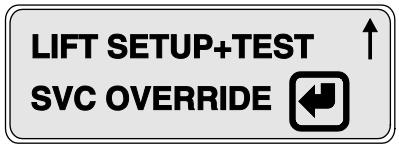

6 Press the Enter button.

⊙ Result: The ground controls LCD display will show an alternating message every 1.5 seconds.

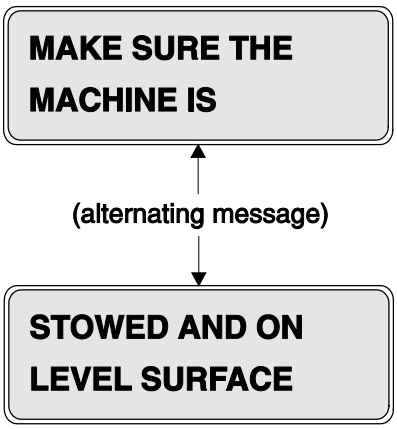

7 Press the Enter button.

⊙ Result: The ground controls LCD display will show the following:

8 Press the Enter button.

⊙ Result: The ground controls LCD display will show the following:

https://truckmanualshub.com/

Ground Controls

2-6
Level Sensors

The Electronic Control Module (ECM) is programmed to deactivate the lift and drive functions and activate an alarm when a signal is received from the level sensor.

The tilt alarm sounds when the incline of the chassis exceeds 1.5° to the side and 3° to the front or rear.

Use the illustrations to verify which type of level sensor is installed and perform the procedure that is appropriate for your machine.

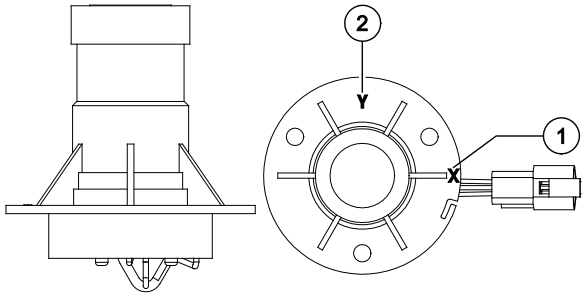

Procedure 1

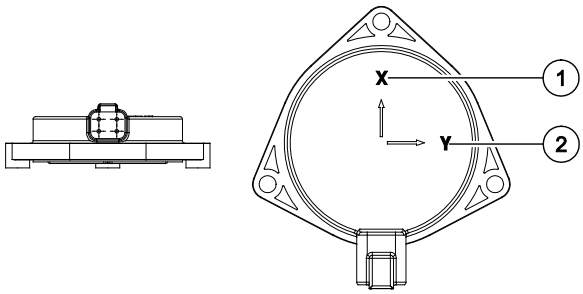

Procedure 2

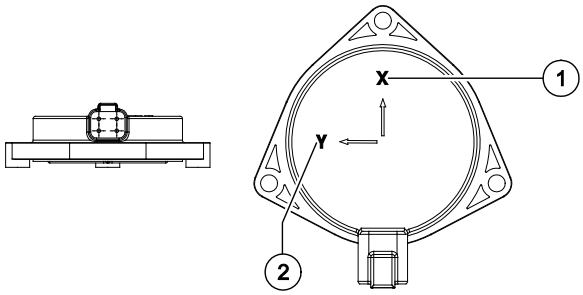

Procedure 3

1 X axis
2 Y axis

https://truckmanualshub.com/

How to Install and Calibrate the Level Sensor - Procedure 1

DANGER Tip-over hazard. Failure to install or calibrate the level sensor as instructed will compromise machine stability and cause the machine to tip over, resulting in death or serious injury. Do not install or calibrate the level sensor other than specified in this procedure.

1 Move the machine to an area that has a firm, level surface and is free of obstructions.

Note: The surface must be 0° +/- 0.5°.

2 Remove the platform controls from the platform.

3 Turn the key switch to platform controls and pull out the red Emergency Stop button to the on position at both ground and platform controls.

4 Raise the platform 7 to 8 feet / 2.1 to 2.4 m.

5 Lift the safety arm, move it to the center of the scissor arm and rotate down to a vertical position.

6 Lower the platform onto the safety arm.

WARNING Crushing hazard. Keep hands clear of the safety arm when lowering the platform.

If you are not installing a new level sensor, proceed to step 15.

7 Turn the key switch to the off position and push in the red Emergency Stop button to the off position at the ground controls.

8 Tag and disconnect the level sensor wire harness from the chassis wire harness.

Note: The wire harness connection is located next to the level sensor, on top of the chassis at the steer end of the machine.

9 Remove the level sensor retaining fasteners and remove the level sensor from the machine.

10 Tag and disconnect the level sensor wires from the level sensor connector plug.

11 Securely install the wires of the new level sensor into the level sensor connector plug.

https://truckmanualshub.com/

Ground Controls

12 Place the new level sensor onto the level sensor mount bracket with the "X" on the level sensor base closest to the long side of the level sensor mount, and the "Y" on the level sensor base closest to the short side of the level sensor mount.

DANGER Tip-over hazard. Failure to install the level sensor as instructed, could result in the machine tipping over, causing death or serious injury.

Steer End

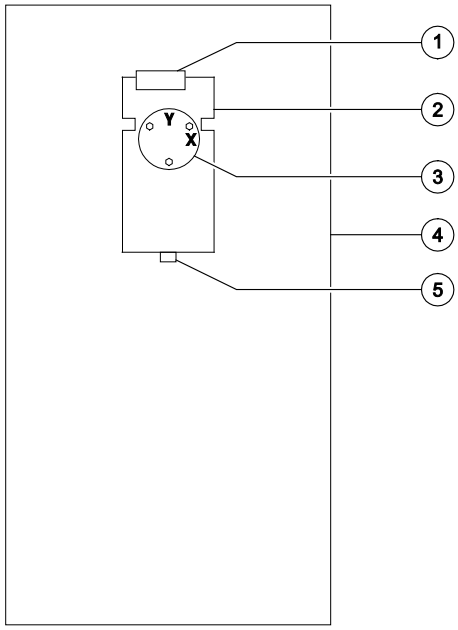

Non-steer End

1 limit switch
2 level sensor mount bracket
3 level sensor S7
4 scissor chassis
5 alarm H5

13 Install the level sensor retaining fasteners through the level sensor and springs, and into the mount bracket. Tighten the fasteners and measure the distance between the level sensor and the level sensor mount bracket.

⊙ Result: The measurement should be approximately 0.375 inch / 10 mm.

14 Connect the chassis wire harness to the level sensor wire harness.

15 Turn the key switch to the ground control and pull out the red Emergency Stop button to the on position at the ground controls.

16 Adjust the level sensor retaining fasteners until the bubble at the top of the level sensor is centered in the circles.

⊙ Result: The tilt sensor alarm should not sound.

17 Raise the platform slightly.

18 Return the safety arm to the stowed position.

19 Lower the platform to the stowed position.

20 Center a lifting jack under the drive chassis at the ground controls side of the machine.

21 Raise the machine approximately 2 inches / 5 cm. Place blocks under the chassis for support.

https://truckmanualshub.com/

22 **GS-1530 and GS-1930:** Place a 0.64 x 6 x 6 inch / 16.2 mm x 15 cm x 15 cm thick steel block under both wheels at the ground controls side of the machine.

GS-1532 and GS-1932: Place a 0.68 x 6 x 6 inch / 17.2 mm x 15 cm x 15 cm thick steel block under both wheels at the ground controls side of the machine.

GS-2032, GS-2632 and GS-3232: Place a 0.66 x 6 x 6 inch / 16.8 mm x 15 cm x 15 cm thick steel block under both wheels at the ground controls side of the machine.

GS-2046, GS-2646, GS-3246 and GS-4047: Place a 1 x 6 x 6 inch / 25.4 mm x 15 cm x 15 cm thick steel block under both wheels at the ground controls side of the machine.

23 Lower the machine onto the blocks.

24 Raise the platform 7 to 8 feet / 2.1 to 2.4 m.

⊙ Result: The level sensor alarm should not sound.

⊠ Result: The level sensor alarm does sound and fault code LL appears in the diagnostic display. Adjust the level sensor retaining fasteners just until the level sensor alarm does not sound.

25 Lower the platform to the stowed position.

26 Raise the machine approximately 2 inches / 5 cm. Place blocks under the chassis for support.

27 Remove the blocks from under both wheels.

28 Lower the machine and remove the blocks.

29 Center a lifting jack under the drive chassis at the battery pack side of the machine.

30 Raise the machine approximately 2 inches / 5 cm. Place blocks under the chassis for support.

31 **GS-1530 and GS-1930:** Place a 0.77 x 6 x 6 inch / 19.6 mm x 15 cm x 15 cm thick steel block under both wheels at the battery pack side of the machine.

GS-1532 and GS-1932: Place a 0.83 x 6 x 6 inch / 21.1 mm x 15 cm x 15 cm thick steel block under both wheels at the battery pack side of the machine.

GS-2032, GS-2632 and GS-3232: Place a 0.8 x 6 x 6 inch / 20.3 mm x 15 cm x 15 cm thick steel block under both wheels at the battery pack side of the machine.

GS-2046, GS-2646, GS-3246 and GS-4047: Place a 1.22 x 6 x 6 inch / 31 mm x 15 cm x 15 cm thick steel block under both wheels at the battery pack side of the machine.

32 Lower the machine onto the blocks.

33 Raise the platform 7 to 8 feet / 2.1 to 2.4 m.

⊙ Result: The platform should stop, an alarm should sound and fault code LL appears in the diagnostic display.

⊠ Result: The platform does not stop or the level sensor alarm does not sound. Adjust the level sensor until the alarm just begins to sound OR the down limit switch may need to be adjusted.

34 Lower the platform to the stowed position.

35 Raise the machine approximately 2 inches / 5 cm.

36 Remove the blocks from under both wheels.

37 Lower the machine and remove the jack.

https://truckmanualshub.com/

Ground Controls

How to Install and Calibrate the Level Sensor - Procedure 2

DANGER Tip-over hazard. Failure to install the level sensor as instructed will compromise machine stability and cause the machine to tip over, resulting in death or serious injury. Do not install the level sensor other than specified in this procedure.

Note: If you are **not** installing a new level sensor, proceed to step 14.

1 Move the machine to an area that has a firm, level surface and is free of obstructions.

Note: Use a digital level to verify the surface is level.

2 Remove the platform controls from the platform.

3 Turn the key switch to ground control and pull out the red Emergency Stop button to the on position at both ground and platform controls.

4 Raise the platform 7 to 8 feet / 2.1 to 2.4 m.

5 Lift the safety arm, move it to the center of the scissor arm and rotate down to a vertical position.

6 Lower the platform onto the safety arm.

WARNING Crushing hazard. Keep hands clear of the safety arm when lowering the platform.

7 Turn the key switch to the off position and push in the red Emergency Stop button to the off position at the ground controls.

8 Tag and disconnect the level sensor wire harness from the chassis wire harness.

Note: The wire harness connection is located on the level sensor, on top of the chassis at the steer end of the machine.

9 Remove the level sensor retaining fasteners and remove the level sensor from the machine.

10 Securely install the wires of the new level sensor into the level sensor connector plug.

https://truckmanualshub.com/

11 Place the new level sensor on to the level sensor bracket with the "Y" on the level sensor closest to the ground controls of the machine and the "X" on the level sensor closest to the steer end of the machine.

DANGER Tip-over hazard. Failure to install the level sensor as instructed, could result in the machine tipping over, causing death or serious injury.

Steer End

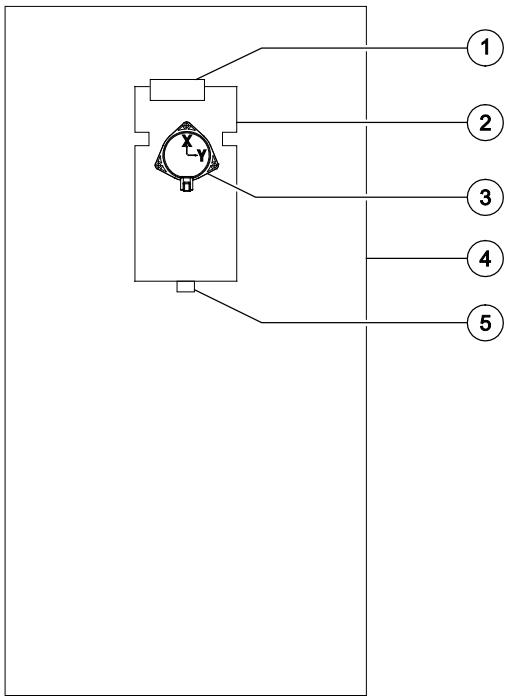

Non-steer End

1 limit switch
2 level sensor mount bracket
3 level sensor S7
4 scissor chassis
5 alarm H5

12 Install the level sensor retaining fasteners through the level sensor and into the mount bracket.

13 Connect the chassis wire harness to the level sensor.

14 Turn the key switch to ground control and pull out the red Emergency Stop button to the on position at both ground and platform controls.

⊙ Result: GCON will display a ‘C051: SYSTEMFAULT, TILT:NoCal fault.

15 Push in the red Emergency Stop button to the off position at the ground controls.

16 Press and hold the ground control scroll up and scroll down buttons.

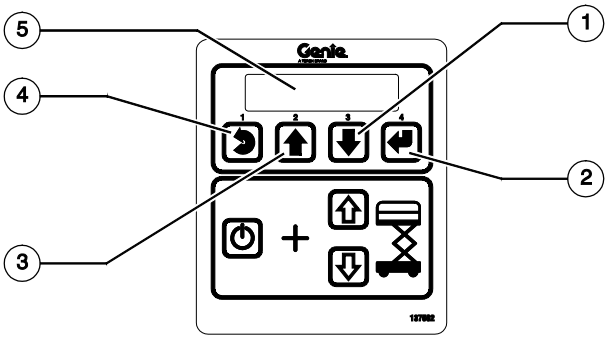

Ground Control Menu Buttons

1 scroll down button
2 enter button
3 scroll up button
4 escape button
5 LCD display

https://truckmanualshub.com/

Ground Controls

17 Pull out the red Emergency Stop button to the on position at the ground controls.

⊙ Result: The ground controls LCD display will show the following:

LIFT SETUP+TEST
SELECT MODEL ↵ ↓

18 Release the Scroll Up and Scroll Down buttons after the ground controller powers up.

19 Use the Scroll Up or Scroll Down buttons to scroll to **Select Option**.

LIFT SETUP+TEST ↑
SELECT OPTION ↵ ↓

20 Press the Enter button.

21 Use the Scroll Up or Scroll Down buttons to scroll to Tilt Sensor.

LIFT SETUP+TEST ↑
TILT SENSOR ↓

22 Press the Enter button.

23 Press and hold the Enter button to start calibration.

⊙ Result: An audible alarm will sound when calibration is complete.

Note: The machine will not calibrate if it is on a slope of one degree or greater.

Note: If the level sensor has been replaced, continue with step 24. If the level sensor was not replaced skip to step 27.

TO START CAL
HOLD DOWN ↵

TILT CALIBRATION
COMPLETE

24 Raise the platform 7 to 8 feet / 2.1 to 2.4 m.

25 Return the safety arm to the stowed position.

26 Lower the platform to the stowed position.

27 Place a digital level on the ground control side of the drive chassis. Zero out the digital level.

28 Drive the steer end of the machine up a ramp until it is just under 3°.

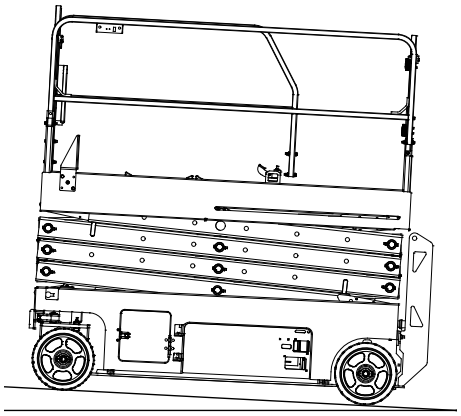

https://truckmanualshub.com/

29 Raise the platform 7 to 8 feet / 2.1 to 2.4 m.

⊙ Result: No audible alarm is heard.

⊠ Result: The platform stops, an audible alarm is heard and Fault LL is displayed. Repeat this procedure starting at step 15 on a firm level surface.

30 Lower the platform to the stowed position.

31 Continue driving the machine up the ramp until it is just over 3°.

32 Raise the platform 7 to 8 feet / 2.1 to 2.4 m.

⊙ Result: The platform should stop, an alarm should sound and fault code LL appears in the diagnostic display.

⊠ Result: The platform does not stop or the level sensor alarm does not sound. Repeat this procedure starting at step 15 on a firm level surface.

33 Lower the platform to the stowed position.

34 Drive the non-steer end of the machine up a ramp until it is just under 3°.

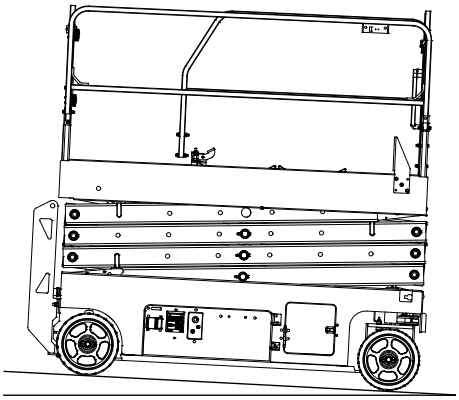

35 Raise the platform 7 to 8 feet / 2.1 to 2.4 m.

⊙ Result: No audible alarm is heard.

⊠ Result: The platform stops, an audible alarm is heard and Fault LL is displayed. Repeat this procedure starting at step 15 on a firm level surface.

36 Lower the platform to the stowed position.

37 Continue driving the machine up the ramp until it is just over 3°.

38 Raise the platform 7 to 8 feet / 2.1 to 2.4 m.

⊙ Result: The platform should stop, an alarm should sound and fault code LL appears in the diagnostic display.

⊠ Result: The platform does not stop or the level sensor alarm does not sound. Repeat this procedure starting at step 15 on a firm level surface.

39 Lower the platform to the stowed position.

40 Place a digital level on the steer end of the drive chassis. Zero out the digital level.

41 Drive the ground control side of the machine onto a ramp until it is just under 1.5°.

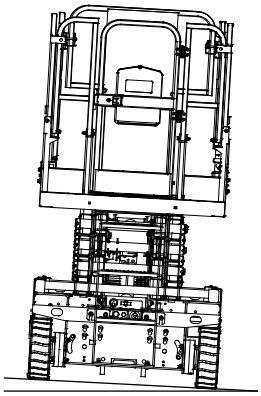

https://truckmanualshub.com/

Ground Controls

42 Raise the platform 7 to 8 feet / 2.1 to 2.4 m.

⊙ Result: No audible alarm is heard.

⊠ Result: The platform stops, an audible alarm is heard and Fault LL is displayed. Repeat this procedure starting at step 15 on a firm level surface.

43 Lower the platform to the stowed position.

44 Continue driving the machine onto the ramp until it is just over 1.5°.

45 Raise the platform 7 to 8 feet / 2.1 to 2.4 m.

⊙ Result: The platform should stop, an alarm should sound and fault code LL appears in the diagnostic display.

⊠ Result: The platform does not stop or the level sensor alarm does not sound. Repeat this procedure starting at step 15 on a firm level surface.

46 Lower the platform to the stowed position.

47 Drive the battery compartment side of the machine onto a ramp until it is just under 1.5°.

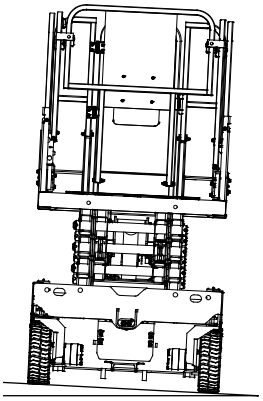

48 Raise the platform 7 to 8 feet / 2.1 to 2.4 m.

⊙ Result: No audible alarm is heard.

⊠ Result: The platform stops, an audible alarm is heard and Fault LL is displayed. Repeat this procedure starting at step 15 on a firm level surface.

49 Lower the platform to the stowed position.

50 Continue driving the machine onto the ramp until it is just over 1.5°.

51 Raise the platform 7 to 8 feet / 2.1 to 2.4 m.

⊙ Result: The platform should stop, an alarm should sound and fault code LL appears in the diagnostic display.

⊠ Result: The platform does not stop or the level sensor alarm does not sound. Repeat this procedure starting at step 15 on a firm level surface.

52 Lower the platform to the stowed position.

https://truckmanualshub.com/

How to Install and Calibrate the Level Sensor - Procedure 3

DANGER Tip-over hazard. Failure to install the level sensor as instructed will compromise machine stability and cause the machine to tip over, resulting in death or serious injury. Do not install the level sensor other than specified in this procedure.

Note: If you are **not** installing a new level sensor, proceed to step 14.

1 Move the machine to an area that has a firm, level surface and is free of obstructions.

Note: Use a digital level to verify the surface is level.

2 Remove the platform controls from the platform.

3 Turn the key switch to ground control and pull out the red Emergency Stop button to the on position at both ground and platform controls.

4 Raise the platform 7 to 8 feet / 2.1 to 2.4 m.

5 Lift the safety arm, move it to the center of the scissor arm and rotate down to a vertical position.

6 Lower the platform onto the safety arm.

WARNING Crushing hazard. Keep hands clear of the safety arm when lowering the platform.

7 Turn the key switch to the off position and push in the red Emergency Stop button to the off position at the ground controls.

8 Tag and disconnect the level sensor wire harness from the chassis wire harness.

Note: The wire harness connection is located on the level sensor, on top of the chassis at the steer end of the machine.

9 Remove the level sensor retaining fasteners and remove the level sensor from the machine.

10 Securely install the wires of the new level sensor into the level sensor connector plug.

https://truckmanualshub.com/

Ground Controls

11 Place the new level sensor on to the level sensor bracket with the "Y" on the level sensor away from the ground controls of the machine and the "X" on the level sensor closest to the steer end of the machine.

DANGER Tip-over hazard. Failure to install the level sensor as instructed, could result in the machine tipping over, causing death or serious injury.

Steer End

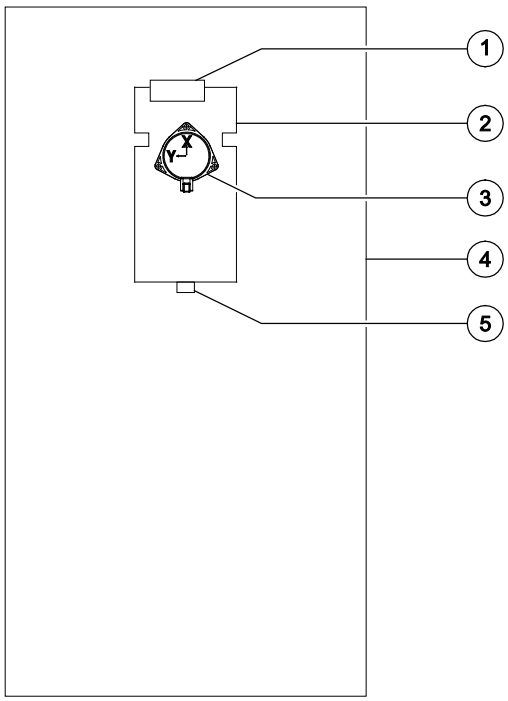

Non-steer End

1 limit switch
2 level sensor mount bracket
3 level sensor S7
4 scissor chassis
5 alarm H5

12 Install the level sensor retaining fasteners through the level sensor and into the mount bracket.

13 Connect the chassis wire harness to the level sensor.

14 Turn the key switch to ground control and pull out the red Emergency Stop button to the on position at both ground and platform controls.

⊙ Result: GCON will display a ‘C051: SYSTEMFAULT, TILT:NoCal fault.

15 Push in the red Emergency Stop button to the off position at the ground controls.

16 Press and hold the ground control scroll up and scroll down buttons.

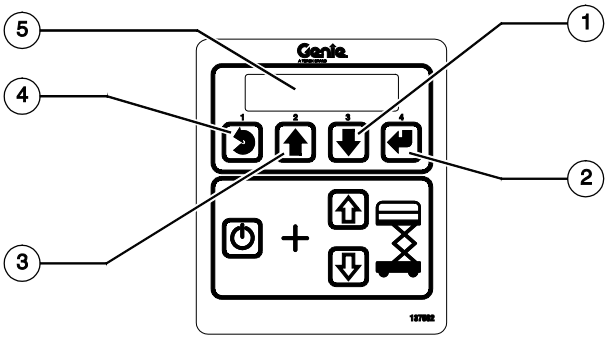

Ground Control Menu Buttons

1 scroll down button
2 enter button
3 scroll up button
4 escape button
5 LCD display

https://truckmanualshub.com/

17 Pull out the red Emergency Stop button to the on position at the ground controls.

⊙ Result: The ground controls LCD display will show the following:

LIFT SETUP+TEST
SELECT MODEL ↵ ↓

18 Release the Scroll Up and Scroll Down buttons after the ground controller powers up.

19 Use the Scroll Up or Scroll Down buttons to scroll to **Select Option**.

LIFT SETUP+TEST ↑
SELECT OPTION ↵ ↓

20 Press the Enter button.

21 Use the Scroll Up or Scroll Down buttons to scroll to Tilt Sensor.

LIFT SETUP+TEST ↑
TILT SENSOR ↓

22 Press the Enter button.

23 Press and hold the Enter button to start calibration.

⊙ Result: An audible alarm will sound when calibration is complete.

Note: The machine will not calibrate if it is on a slope of one degree or greater.

Note: If the level sensor has been replaced, continue with step 24. If the level sensor was not replaced skip to step 27.

TO START CAL
HOLD DOWN ↵

TILT CALIBRATION
COMPLETE

24 Raise the platform 7 to 8 feet / 2.1 to 2.4 m.

25 Return the safety arm to the stowed position.

26 Lower the platform to the stowed position.

27 Place a digital level on the ground control side of the drive chassis. Zero out the digital level.

28 Drive the steer end of the machine up a ramp until it is just under 3°.

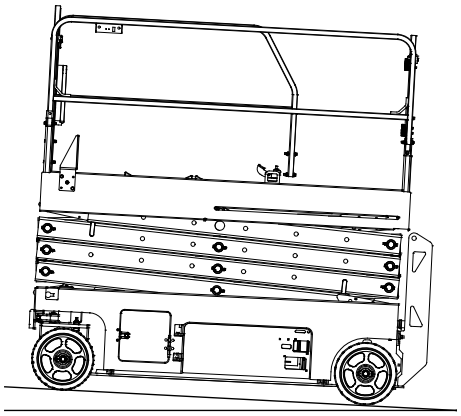

https://truckmanualshub.com/

Ground Controls

29 Raise the platform 7 to 8 feet / 2.1 to 2.4 m.

⊙ Result: No audible alarm is heard.

⊠ Result: The platform stops, an audible alarm is heard and Fault LL is displayed. Repeat this procedure starting at step 15 on a firm level surface.

30 Lower the platform to the stowed position.

31 Continue driving the machine up the ramp until it is just over 3°.

32 Raise the platform 7 to 8 feet / 2.1 to 2.4 m.

⊙ Result: The platform should stop, an alarm should sound and fault code LL appears in the diagnostic display.

⊠ Result: The platform does not stop or the level sensor alarm does not sound. Repeat this procedure starting at step 15 on a firm level surface.

33 Lower the platform to the stowed position.

34 Drive the non-steer end of the machine up a ramp until it is just under 3°.

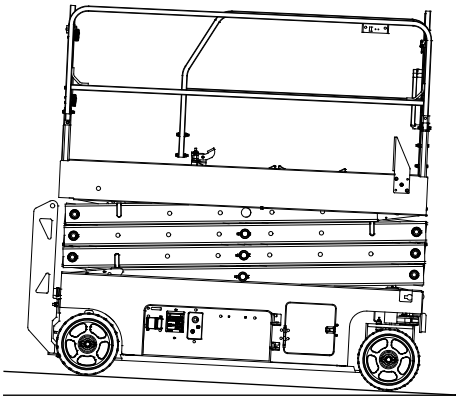

35 Raise the platform 7 to 8 feet / 2.1 to 2.4 m.

⊙ Result: No audible alarm is heard.

⊠ Result: The platform stops, an audible alarm is heard and Fault LL is displayed. Repeat this procedure starting at step 15 on a firm level surface.

36 Lower the platform to the stowed position.

37 Continue driving the machine up the ramp until it is just over 3°.

38 Raise the platform 7 to 8 feet / 2.1 to 2.4 m.

⊙ Result: The platform should stop, an alarm should sound and fault code LL appears in the diagnostic display.

⊠ Result: The platform does not stop or the level sensor alarm does not sound. Repeat this procedure starting at step 15 on a firm level surface.

39 Lower the platform to the stowed position.

40 Place a digital level on the steer end of the drive chassis. Zero out the digital level.

41 Drive the ground control side of the machine onto a ramp until it is just under 1.5°.

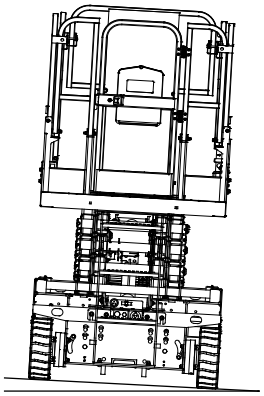

https://truckmanualshub.com/

42 Raise the platform 7 to 8 feet / 2.1 to 2.4 m.

⊙ Result: No audible alarm is heard.

⊠ Result: The platform stops, an audible alarm is heard and Fault LL is displayed. Repeat this procedure starting at step 15 on a firm level surface.

43 Lower the platform to the stowed position.

44 Continue driving the machine onto the ramp until it is just over 1.5°.

45 Raise the platform 7 to 8 feet / 2.1 to 2.4 m.

⊙ Result: The platform should stop, an alarm should sound and fault code LL appears in the diagnostic display.

⊠ Result: The platform does not stop or the level sensor alarm does not sound. Repeat this procedure starting at step 15 on a firm level surface.

46 Lower the platform to the stowed position.

47 Drive the battery compartment side of the machine onto a ramp until it is just under 1.5°.

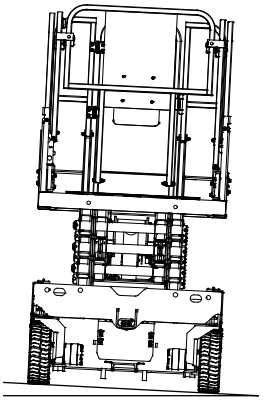

48 Raise the platform 7 to 8 feet / 2.1 to 2.4 m.

⊙ Result: No audible alarm is heard.

⊠ Result: The platform stops, an audible alarm is heard and Fault LL is displayed. Repeat this procedure starting at step 15 on a firm level surface.

49 Lower the platform to the stowed position.

50 Continue driving the machine onto the ramp until it is just over 1.5°.

51 Raise the platform 7 to 8 feet / 2.1 to 2.4 m.

⊙ Result: The platform should stop, an alarm should sound and fault code LL appears in the diagnostic display.

⊠ Result: The platform does not stop or the level sensor alarm does not sound. Repeat this procedure starting at step 15 on a firm level surface.

52 Lower the platform to the stowed position.

https://truckmanualshub.com/

Ground Controls

Outrigger Level Sensor - GS-3232 Models

(from serial number GS3211A to GS3215A-141898)
(from serial number GS3212C-10000)

DANGER Tip-over hazard. Failure to install the level sensor as instructed will compromise machine stability and cause the machine to tip over, resulting in death or serious injury. Do not install the level sensor other than specified in this procedure.

1 Move the machine to an area that has a firm, level surface and is free of obstructions.

2 Turn the key switch to the off position and push in the red Emergency Stop button to the off position at both the ground and platform controls.

3 Open the access door at the battery side of the machine.

4 Tag and disconnect the outrigger level sensor wire harness from the outrigger level sensor.

5 Remove the outrigger level sensor retaining fasteners and remove the outrigger level sensor from the machine.

6 Place the new outrigger level sensor onto the outrigger level sensor base with the flat side of the outrigger level sensor closest to the battery side access door. Refer to the illustration below.

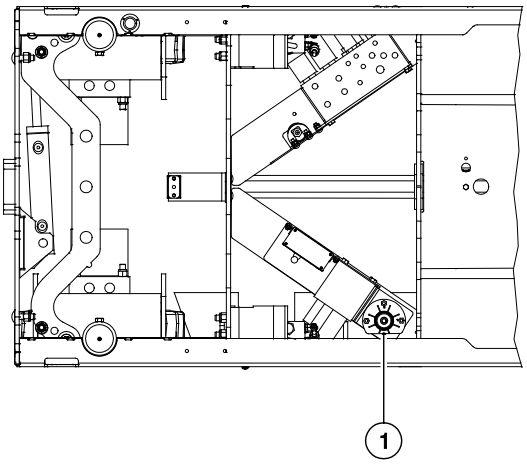

1 outrigger level sensor (GS-3232)

7 Secure the outrigger level sensor onto the base with the retaining fasteners removed in step 5.

8 Adjust the outrigger level sensor retaining fasteners until the bubble at the top of the level sensor is centered in the circles.

9 Connect the outrigger level sensor wire harness to the new outrigger level sensor.

10 Close the access door at the battery side of the machine.

11 Calibrate the outrigger level sensor. Refer to Repair Procedure, *How to Calibrate the Outrigger System.*

https://truckmanualshub.com/

2-7
Manual Platform Lowering Cable

The manual platform lowering cable lowers the platform in the event of a main power failure. The manual platform lowering cable is attached to the barrel end of the lift cylinder and is activated next to the ground controls.

How to Adjust the Manual Platform Lowering Cable

1 Raise the platform 7 to 8 feet / 2.1 to 2.4 m.

2 Lift the safety arm, move it to the center of the scissor arm and rotate down to a vertical position.

3 Lower the platform onto the safety arm.

WARNING Crushing hazard. Keep hands clear of the safety arm when lowering the platform.

4 Pull the handle of the manual platform lowering cable out until considerable resistance is felt. Release the handle.

5 Measure the distance between the base of the handle and cable mounting nut.

⊙ Result: The measurement should be no greater than 0.125 inch / 3 mm.

Note: Proceed to step 8 if measurement is correct.

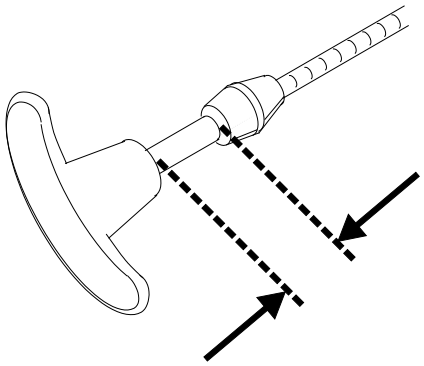

Platform manual lowering cable specification	
Gap, lowering handle to mounting nut	0 to 0.125 inch 0 to 3 mm

https://truckmanualshub.com/

Ground Controls

Skip to step 8 if the measurement is correct.

6 To adjust, loosen the upper lock nut on the cable mounting bracket at the cylinder. Turn the lower lock nut clockwise to decrease the distance or counterclockwise to increase the distance. Tighten the upper lock nut.

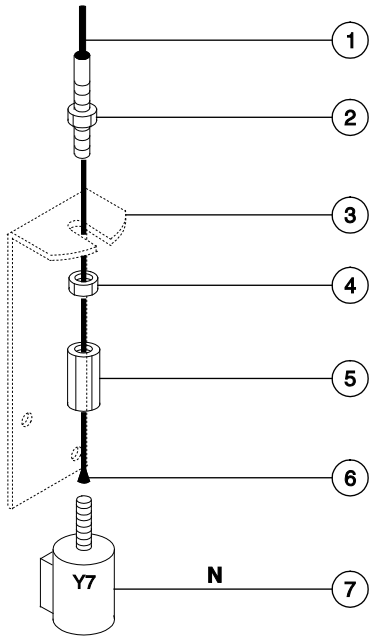

1 manual lowering cable sheath
2 upper lock nut
3 cable mounting bracket
4 lower lock nut
5 cable mounting nut
6 end of lowering cable
7 manual lowering valve (hydraulic schematic item N)

7 Repeat this procedure beginning with step 4.

8 Raise the platform and rotate the safety arm to the stowed position.

9 Pull the manual lowering handle at the ground controls 2 to 3 times to ensure it is functioning correctly.

https://truckmanualshub.com/

2-8 Outrigger Calibration

The Electronic Control Module (ECM) is programmed to deactivate the drive and steer functions while the outriggers are deployed and activate an alarm when a signal is received from the outrigger level sensor, indicating the outriggers are not deployed or the machine is out of level.

The ECM is also used to calibrate the outrigger level sensor to achieve a levelness of 0° +/- 0.5° front to back and side to side, while the outriggers are deployed.

For further information or assistance, contact Genie Product Support.

How to Calibrate the Outrigger System

(GS-3232 - facility code C)

(GS-3232 - facility code A, to GS3215A-141898)

1 Move the machine to an area that has a firm, level surface and is free of obstructions. Use digital level to confirm.

2 Turn the key switch to ground controls.

3 At the ground controls, press and hold the Menu Up and Menu Down buttons.

4 While pressing both buttons down, pull out the red Emergency Stop Button.

5 Release the Menu Up and Menu Down buttons after the ground controller powers up.

6 Use the Menu Up or Menu Down buttons to scroll to Machine Options.

7 Press the Enter button to select Machine Options.

8 Use the Menu Up or Menu Down buttons to scroll to Outriggers.

9 Press the Enter button to select Outriggers.

10 Use the Menu Up or Menu Down buttons to scroll to Calibrate Outriggers.

11 Press the Enter button to select Calibrate Outriggers.

12 Press and hold the Enter button while the system gathers data to calibrate the outrigger level sensor.

⚠WARNING Crushing hazard. Keep body parts away from outriggers during outrigger movement.

13 Continue holding the Enter button after the outrigger level sensor is calibrated. The outriggers will retract while the outrigger system gathers and saves data.

14 Continue holding the Enter button after the outriggers retract. The outriggers will now extend and the system will gather and save data to calibrate the outriggers.

15 Continue holding the Enter button after the outriggers extend. The outriggers will now retract while the outrigger system gathers and saves data.

⊙ Result: The alarms at the ground and platform controls should sound for 1 second. The outrigger system is calibrated.

Note: After installing a new outrigger level sensor, the new outrigger level sensor must be calibrated following this procedure.

https://truckmanualshub.com/

Hydraulic Tank

3-1 Hydraulic Tank

The primary functions of the hydraulic tank are to cool and deaerate the hydraulic fluid during operation. It utilizes internal suction strainers for the pump supply lines and has an external return line filter.

How to Remove the Hydraulic Tank

NOTICE Component damage hazard. The work area and surfaces where this procedure will be performed must be clean and free of debris that could get into the hydraulic system.

Note: When removing a hose assembly or fitting, the O-ring (if equipped) on the fitting and/or hose end must be replaced. All connections must be torqued to specification during installation. Refer to Specifications, *Hydraulic Hose and Fitting Torque Specifications.*

Perform this procedure with the platform in the stowed position.

1 Disconnect the battery pack from the machine.

WARNING Electrocution/burn hazard. Contact with electrically charged circuits could result in death or serious injury. Remove all rings, watches and other jewelry.

2 Tag and disconnect the hydraulic tank return hard line from the filter. Remove the hard line from the machine. Cap the fitting on the filter head.

3 Tag and disconnect the hydraulic tank hard line from the pump. Remove the hard line from the machine. Cap the fitting on the pump.

4 Remove the hydraulic tank retaining fasteners and remove the hydraulic tank from the machine.

WARNING Bodily injury hazard. Spraying hydraulic oil can penetrate and burn skin. Loosen hydraulic connections very slowly to allow the oil pressure to dissipate gradually. Do not allow oil to squirt or spray.

5 Remove the hydraulic tank cap and drain the tank into a suitable container.

Torque specifications	
Hydraulic retaining fasteners, dry	35 in-lbs 4 Nm
Hydraulic tank retaining fasteners, lubricated	26 in-lbs 2.9 Nm

https://truckmanualshub.com/

4-1
Function Pump

The hydraulic pump is attached to the motor which makes up the hydraulic power unit.

How to Test the Hydraulic Pump

Note: When removing a hose assembly or fitting, the O-ring (if equipped) on the fitting and/or hose end must be replaced. All connections must be torqued to specification during installation. Refer to Specifications, *Hydraulic Hose and Fitting Torque Specifications.*

NOTICE Component damage hazard. The work area and surfaces where this procedure will be performed must be clean and free of debris that could get into the hydraulic system.

1 Tag, disconnect and plug the high pressure hydraulic hose from the hydraulic pump.

2 Connect a 0 to 5000 psi / 0 to 350 bar pressure gauge to the high pressure port on the pump.

3 Turn the key switch to ground control and pull out the red Emergency Stop button to the on position at both ground and platform controls.

4 Activate the platform up function from the ground controls.

⊙ Result: If the pressure gauge reads 3200 psi / 221 bar, immediately stop. The pump is good.

⊠ Result: If the pressure gauge fails to reach 3200 psi / 221 bar, the pump is bad and will need to be serviced or replaced.

NOTICE Component damage hazard. There is no relief valve in the hydraulic pump and the pump can be damaged if the pressure is allowed to exceed 3200 psi / 221 bar. When testing the pump, activate the pump in one second intervals until 3200 psi / 221 bar is confirmed. Do not over-pressurize the pump.

5 Remove the pressure gauge and reconnect the hydraulic hose. Torque to specifications.

https://truckmanualshub.com/

Hydraulic Pump

How to Remove the Hydraulic Pump

Note: When removing a hose assembly or fitting, the O-ring (if equipped) on the fitting and/or hose end must be replaced. All connections must be torqued to specification during installation. Refer to Specifications, *Hydraulic Hose and Fitting Torque Specifications.*

1 Disconnect the battery pack from the machine.

WARNING Electrocution/burn hazard. Contact with electrically charged circuits could result in death or serious injury. Remove all rings, watches and other jewelry.

2 Tag and disconnect the hydraulic power unit cables at the motor controller.

3 Disconnect the filter head from the filter head mounting bracket. Rotate the filter out and away from the hydraulic power unit.

4 Remove the hydraulic power unit retaining fasteners.

5 Tag, disconnect and plug the hydraulic tank hard line from the pump. Cap the fitting on the pump.

6 Tag, disconnect and plug the high pressure hose from the pump. Cap the fitting on the pump.

WARNING Bodily injury hazard. Spraying hydraulic oil can penetrate and burn skin. Loosen hydraulic connections very slowly to allow the oil pressure to dissipate gradually. Do not allow oil to squirt or spray.

7 Remove the hydraulic power unit from the machine.

8 Remove the pump mounting bolts. Carefully remove the pump.

DANGER Tip-over hazard. After replacing the hydraulic pump, it is critical to return the function speed settings to original factory specifications. Failure to restore the machine to original factory specifications could cause the machine to tip over resulting in death or serious injury.

https://truckmanualshub.com/

This page intentionally left blank.

https://truckmanualshub.com/

Manifolds

5-1
Function Manifold Components – GS-1530, GS-1532, GS-1930 and GS-1932

The function manifold is mounted under the machine, between the module trays.

Index No.	Description	Schematic Item	Function	Torque
—	Coil nut (item F)	—	—	4-5 ft-lbs / 5-7 Nm
—	Coil nut (items E and H)	—	—	5-7 ft-lbs / 7-9 Nm
1	Diagnostic port	A	Test port	—
2	Check disc	B	Steer circuit	18 ft-lbs / 24 Nm
3	Relief valve, 1800 to 3700 psi / 124 to 255 bar	C	Lift relief	20 ft-lbs / 27 Nm
4	Check valve, 10 psi / 0.7 bar	D	Drive circuit	20 ft-lbs / 27 Nm
5	Solenoid valve, 3 position 4 way	E	Drive forward/reverse	25 ft-lbs / 34 Nm
6	Solenoid valve, 3 position 4 way	F	Steer left/right	25 ft-lbs / 34 Nm
7	Flow regulator and relief valve, 0.75 gpm / 2.8 L/min 1500 psi / 130 bar	G	Steer circuit	26 ft-lbs / 35 Nm
8	Solenoid valve, 2 position 4 way	H	Platform up	25 ft-lbs / 34 Nm
9	Relief valve, 3700 psi / 255 bar maximum	I	System relief	20 ft-lbs / 27 Nm

How to Install a Valve Cartridge

1 Dip the cartridge in clean oil to lube the O-rings.

2 Screw the cartridge in by hand until the top O-ring is met, then torque to specifications.

3 If required, install the valve coil(s) onto the valve stem. Install the coil nut onto the valve stem and torque to specifications.

https://truckmanualshub.com/

Manifolds

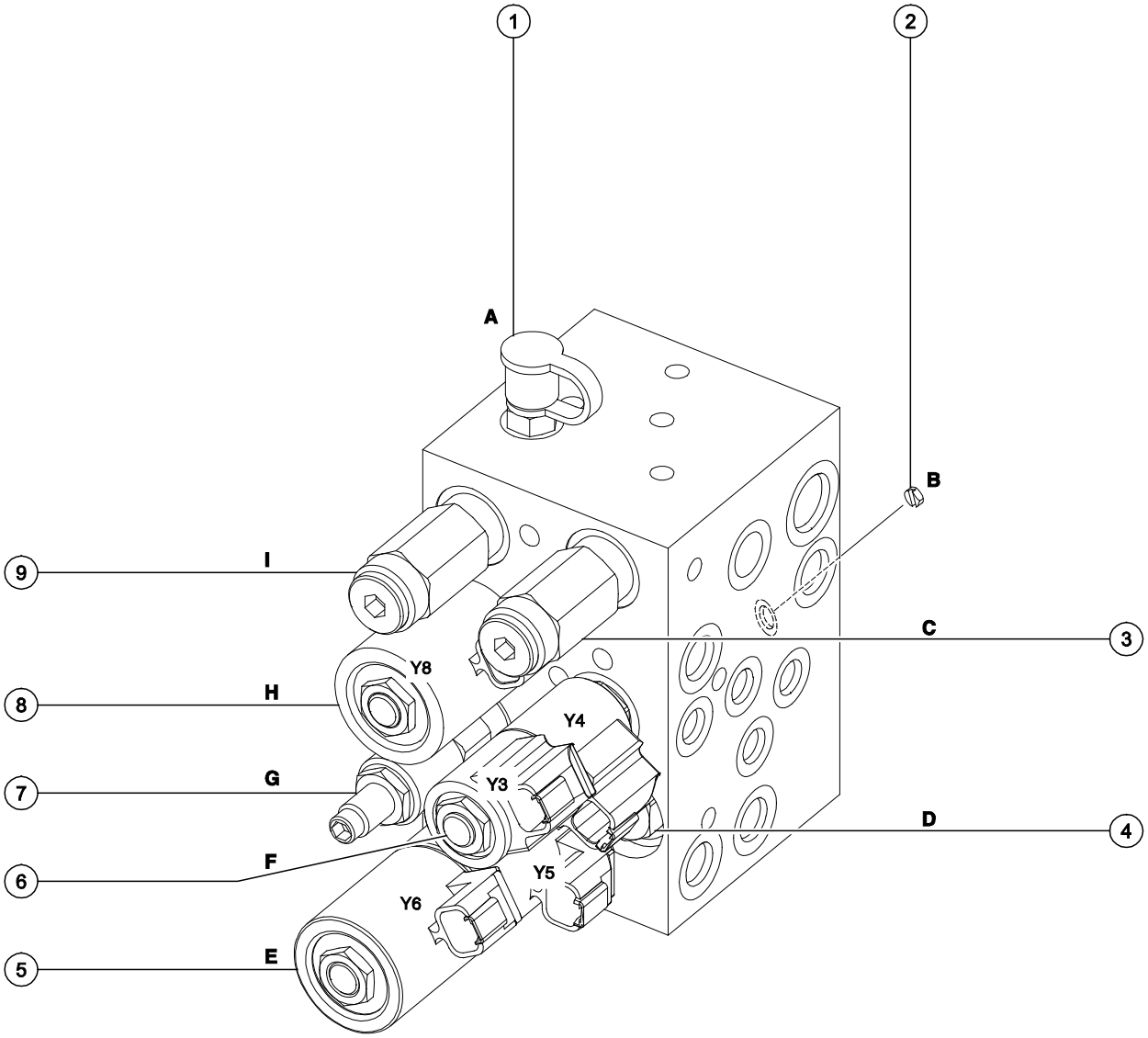

Note: 'alpha' callouts refer to corresponding notes on the hydraulic schematic.

Note: 'alpha-numeric' callouts refer to corresponding notes on the electrical schematic.

https://truckmanualshub.com/

Manifolds

5-2
Function Manifold Components – GS-2032, GS-2632, GS-3232, GS-2046, GS-2646 and GS-3246

The function manifold is mounted behind an inspection door, at the ground control side of the machine.

Index No.	Description	Schematic Item	Function	Torque
—	Coil nut (item AC)	—	—	4-5 ft-lbs / 5-7 Nm
—	Coil nut (items AE, AG and AI)	—	—	5-7 ft-lbs / 7-9 Nm
1	Diagnostic port	AA	Test port	—
2	Relief valve, 3700 psi / 255 bar maximum	AB	System relief	20 ft-lbs / 27 Nm
3	Solenoid valve, 3 position 4 way	AC	Steer left/right	25 ft-lbs / 34 Nm
4	Check valve, (GS-3232 and GS-3246 with load sense installed)	AK	Lift circuit	23 ft-lbs / 31 Nm
5	Check disc	AD	Steer circuit	18 ft-lbs / 24 Nm
6	Solenoid valve, 2 position 4 way	AE	Drive speed select circuit	25 ft-lbs / 34 Nm
7	Relief valve, 50 psi / 3.4 bar	AF	Brake release	20 ft-lbs / 27 Nm
8	Solenoid valve, 3 position 5 way	AG	Drive forward/reverse	25 ft-lbs / 34 Nm
9	Flow regulator and relief valve, 0.75 gpm / 2.8 L/min, 1500 psi / 103 bar	AH	Steer circuit	26 ft-lbs / 35 Nm
10	Solenoid valve, 2 position 4 way	AI	Platform up	25 ft-lbs / 34 Nm
11	Relief valve, 1800 to 3700 psi / 124 to 255 bar	AJ	Lift relief	20 ft-lbs / 27 Nm

How to Install a Valve Cartridge

1 Dip the cartridge in clean oil to lube the O-rings.

2 Screw the cartridge in by hand until the top O-ring is met, then torque to specifications.

3 If required, install the valve coil(s) onto the valve stem. Install the coil nut onto the valve stem and torque to specifications.

https://truckmanualshub.com/

Manifolds

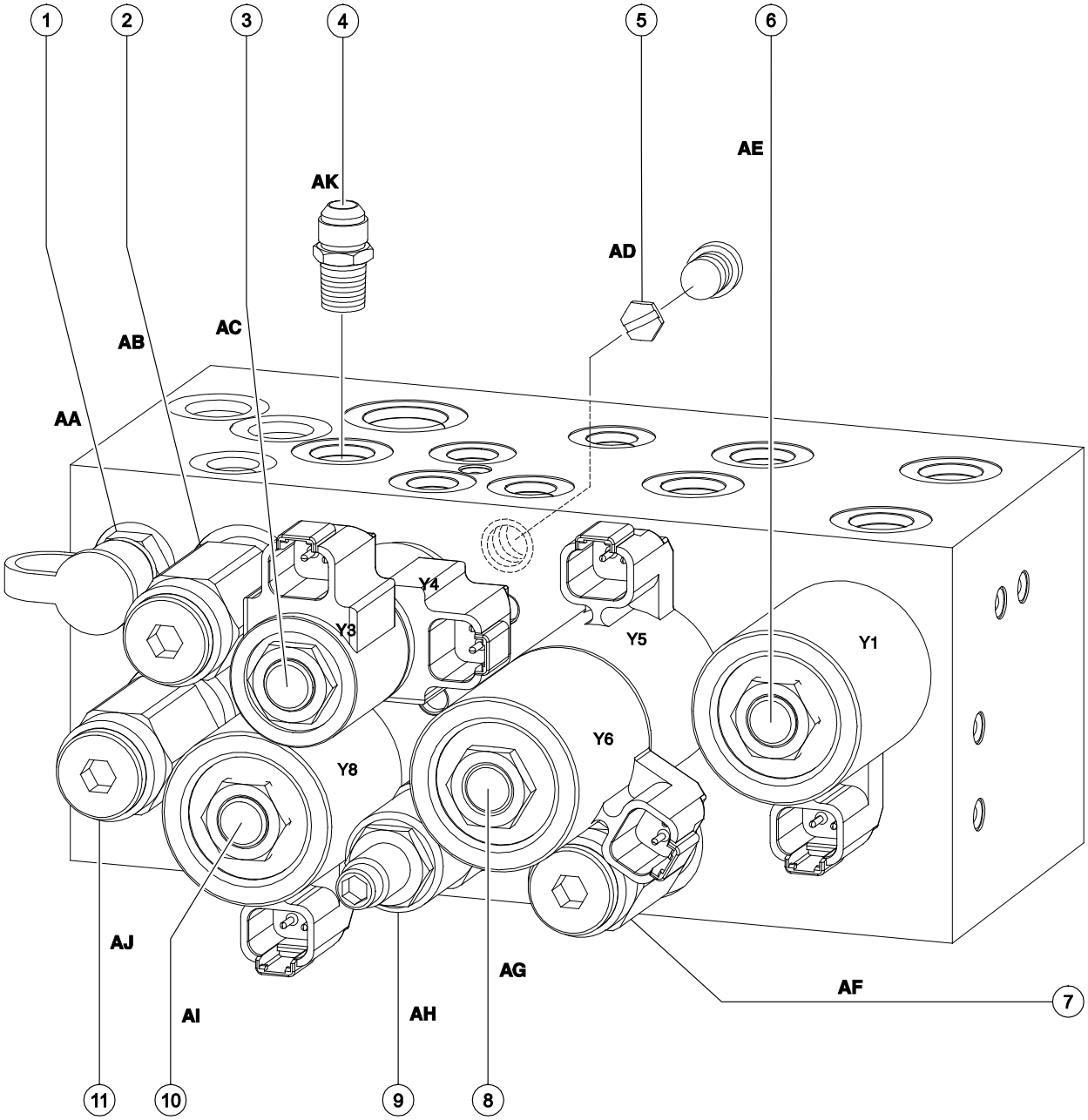

Note: 'alpha' callouts refer to corresponding notes on the hydraulic schematic.

Note: 'alpha-numeric' callouts refer to corresponding notes on the electrical schematic.

https://truckmanualshub.com/

Manifolds

5-3
Function Manifold Components – GS-4047

The function manifold is mounted behind an inspection door, at the ground control side of the machine.

Index No.	Description	Schematic Item	Function	Torque
—	Coil nut (item DC)	—	—	4-5 ft-lbs / 5-7 Nm
—	Coil nut (items DE, DG and DI)	—	—	5-7 ft-lbs / 7-9 Nm
1	Diagnostic port	DA	Test port	—
2	Relief valve, 3500 psi / 241 bar maximum	DB	System relief	20 ft-lbs / 27 Nm
3	Solenoid valve, 3 position 4 way	DC	Steer left/right	25 ft-lbs / 34 Nm
4	Check disc	DD	Steer circuit	18 ft-lbs / 24 Nm
5	Solenoid valve, 2 position 4 way	DE	Drive speed select circuit	25 ft-lbs / 34 Nm
6	Relief valve, 50 psi / 3.4 bar	DF	Brake release	20 ft-lbs / 27 Nm
7	Solenoid valve, 3 position 5 way	DG	Drive forward/reverse	25 ft-lbs / 34 Nm
8	Flow regulator and relief valve, 0.75 gpm / 2.8 L/min, 1500 psi / 103 bar	DH	Steer circuit	26 ft-lbs / 35 Nm
9	Solenoid valve, 2 position 4 way	DI	Platform up	25 ft-lbs / 34 Nm
10	Relief valve, 3000 psi / 207 bar	DJ	Lift relief	20 ft-lbs / 27 Nm

How to Install a Valve Cartridge

1 Dip the cartridge in clean oil to lube the O-rings.

2 Screw the cartridge in by hand until the top O-ring is met, then torque to specifications.

3 If required, install the valve coil(s) onto the valve stem. Install the coil nut onto the valve stem and torque to specifications.

https://truckmanualshub.com/

Manifolds

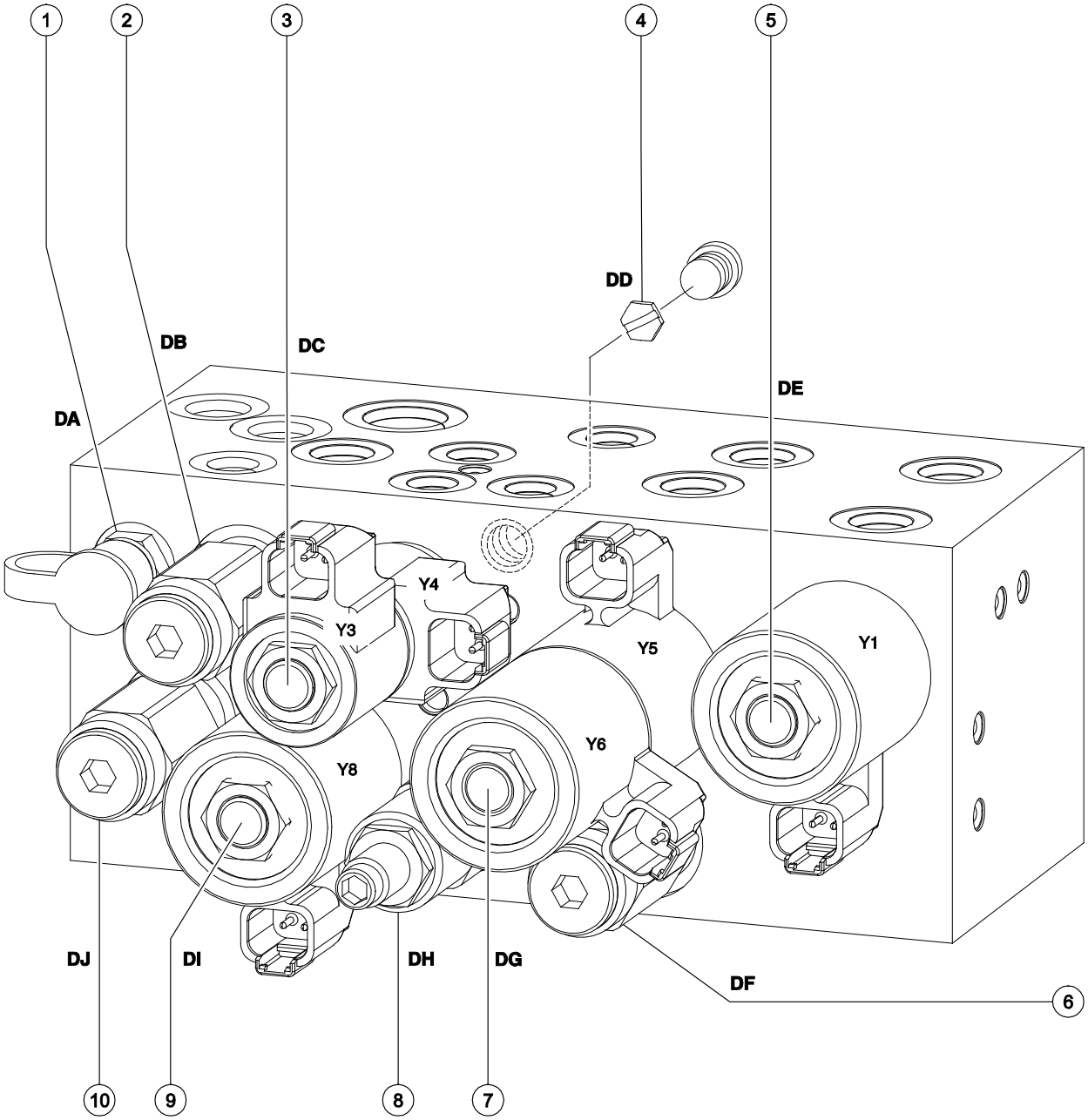

Note: 'alpha' callouts refer to corresponding notes on the hydraulic schematic.

Note: 'alpha-numeric' callouts refer to corresponding notes on the electrical schematic.

https://truckmanualshub.com/

Manifolds

5-4
Check Valve Manifold Components – GS-1530, GS-1532, GS-1930 and GS-1932

The check valve manifold is mounted on the function manifold.

Index No.	Description	Schematic Item	Function	Torque
1	Check valve, 200 psi / 13.8 bar	S	Drive circuit	20 ft-lbs / 27 Nm

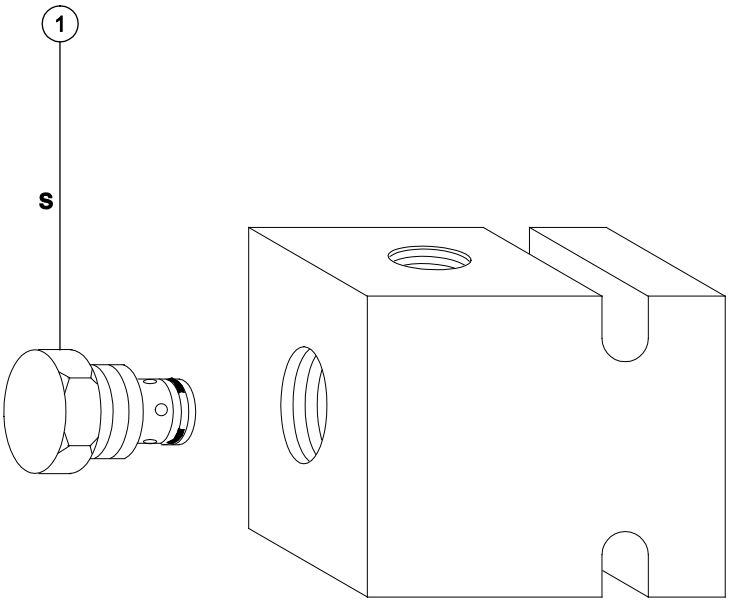

Note: 'alpha' callouts refer to corresponding notes on the hydraulic schematic.

How to Install a Valve Cartridge

1 Dip the cartridge in clean oil to lube the O-rings.

2 Screw the cartridge in by hand until the top O-ring is met, then torque to specifications.

3 If required, install the valve coil(s) onto the valve stem. Install the coil nut onto the valve stem and torque to specifications.

https://truckmanualshub.com/

5-5
Lift Pressure Selector Manifold Components – GS-4047

The lift pressure selector manifold is mounted behind an inspection door, at the ground control side of the machine.

Index No.	Description	Schematic Item	Function	Torque
—	Coil nut (item DN)	—	—	4-5 ft-lbs / 5-7 Nm
—	Plug	—	—	13 ft-lbs / 18 Nm
1	Lift pressure selector valve, 200 psi / 138 bar	DM	Lift relief	20 ft-lbs / 27 Nm
2	Solenoid valve, 2 position 2 way	DN	Lift circuit	20 ft-lbs / 27 Nm

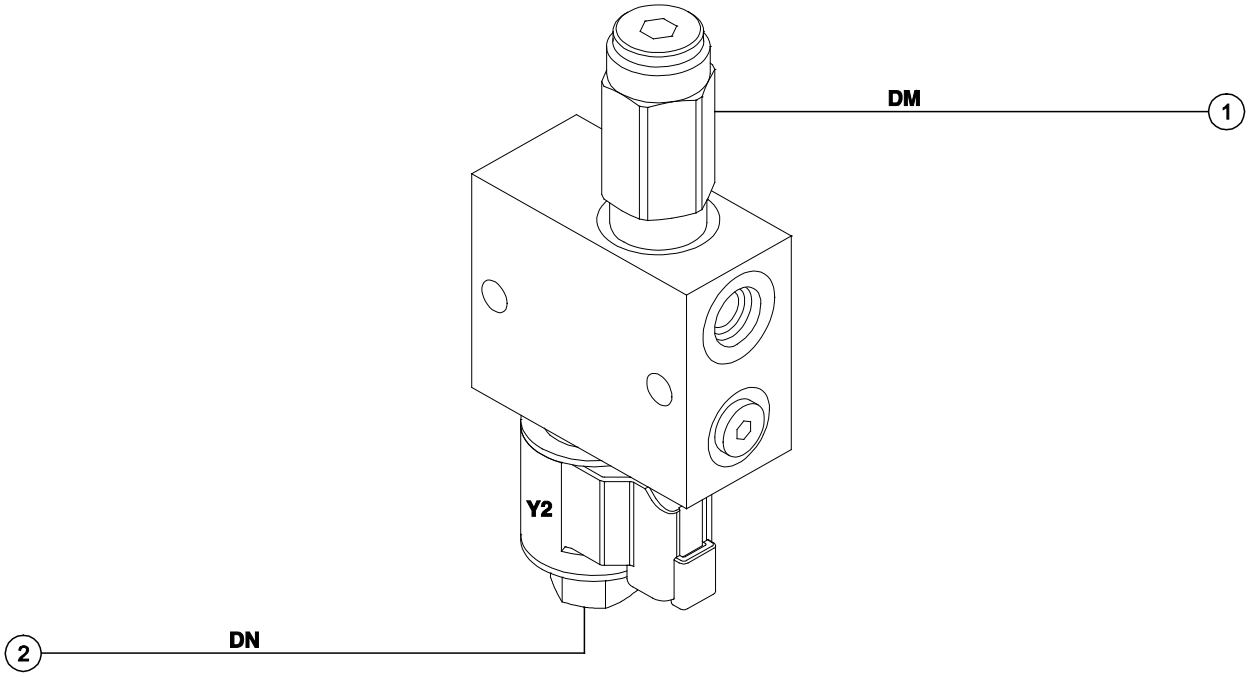

Note: 'alpha' callouts refer to corresponding notes on the hydraulic schematic.

Note: 'alpha-numeric' callouts refer to corresponding notes on the electrical schematic.

How to Install a Valve Cartridge

1 Dip the cartridge in clean oil to lube the O-rings.

2 Screw the cartridge in by hand until the top O-ring is met, then torque to specifications.

3 If required, install the valve coil(s) onto the valve stem. Install the coil nut onto the valve stem and torque to specifications.

https://truckmanualshub.com/

Manifolds

5-6
Outrigger Function Manifold Components – GS-3232

The outrigger function manifold is mounted behind an inspection door, at the battery side of the machine.

Index No.	Description	Schematic Item	Function	Torque
—	Coil nut (item BA)	—	—	4-5 ft-lbs / 5-7 Nm
1	Solenoid valve, 3 position 4 way	BA	Outriggers extend / retract	25 ft-lbs / 34 Nm
2	Relief valve, 3500 psi / 241 bar maximum	BB	Outrigger circuit	20 ft-lbs / 27 Nm

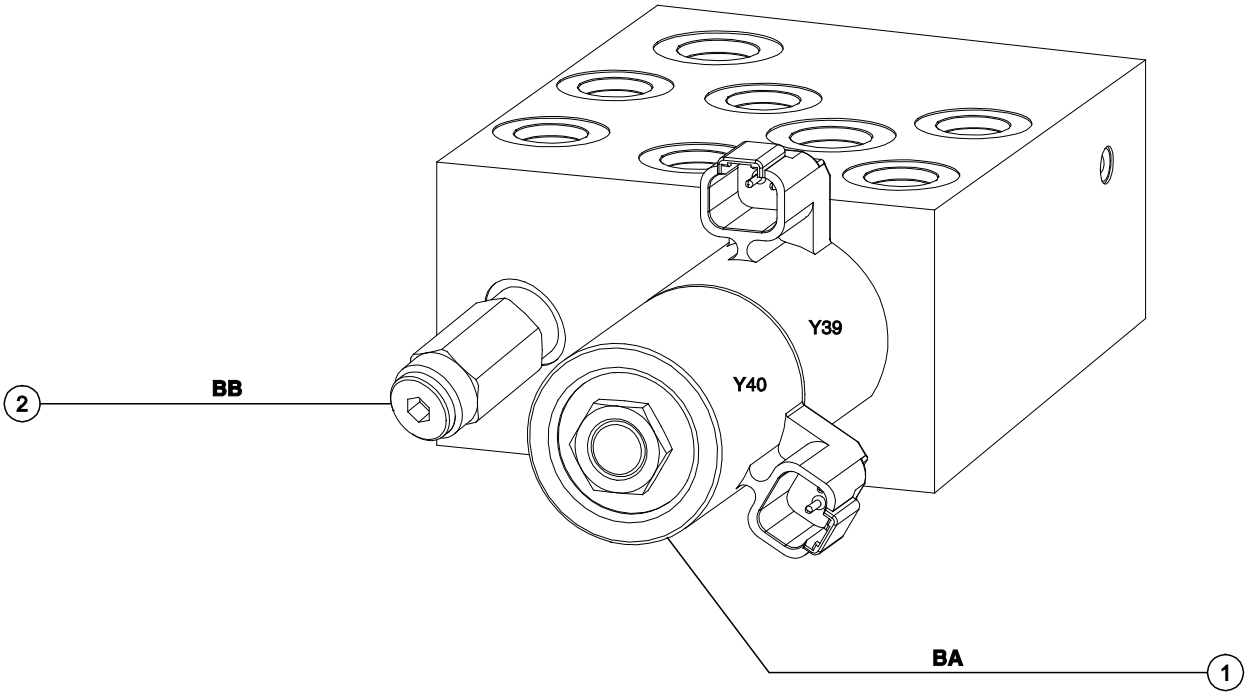

Note: 'alpha' callouts refer to corresponding notes on the hydraulic schematic.

Note: 'alpha-numeric' callouts refer to corresponding notes on the electrical schematic.

How to Install a Valve Cartridge

1 Dip the cartridge in clean oil to lube the O-rings.

2 Screw the cartridge in by hand until the top O-ring is met, then torque to specifications.

3 If required, install the valve coil(s) onto the valve stem. Install the coil nut onto the valve stem and torque to specifications.

https://truckmanualshub.com/

5-7
Outrigger Cylinder Manifold Components – GS-3232

The outrigger function manifold is mounted behind an inspection door, at the battery side of the machine.

Index No.	Description	Schematic Item	Function	Torque
—	Coil nut (item CA, CB. CC, CD)	—	—	4-5 ft-lbs / 5-7 Nm
1	Solenoid valve, 2 position 2 way	CA, CB, CC, CD	Outriggers extend / retract	25 ft-lbs / 34 Nm
2	Orifice Plug, 0.037 inch / 0.94 mm	CE	Outrigger retract	—
3	Check Valve, pilot operated	CF	Retract flow control	20 ft-lbs / 27.1 Nm
4	Pressure transducer	CG	Outrigger auto level	16 ft-lbs / 21.7 Nm

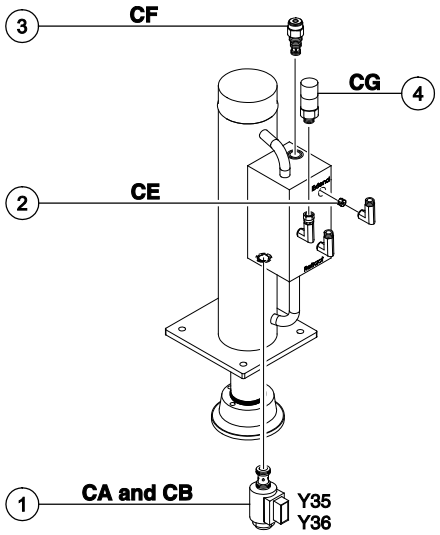

Front Outriggers

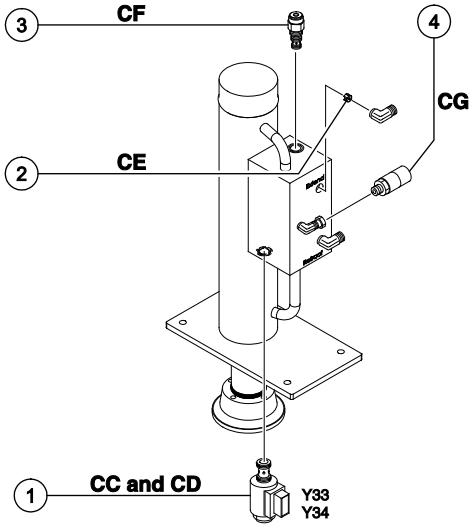

Rear Outriggers

Note: 'alpha' callouts refer to corresponding notes on the hydraulic schematic.

Note: 'alpha-numeric' callouts refer to corresponding notes on the electrical schematic.

How to Install a Valve Cartridge

1 Dip the cartridge in clean oil to lube the O-rings.

2 Screw the cartridge in by hand until the top O-ring is met, then torque to specifications.

3 If required, install the valve coil(s) onto the valve stem. Install the coil nut onto the valve stem and torque to specifications.

https://truckmanualshub.com/

Manifolds

5-8 Valve Adjustments - Function Manifold

Note: Perform this test from the ground with the platform controls. Do not stand in the platform.

Note: Verify the hydraulic oil level is at the FULL mark on the hydraulic tank.

How to Adjust the System Relief Valve

1 Locate the system relief valve on the function manifold (schematic item I, AB or DB).

2 Connect a 0 to 5000 psi / 0 to 350 bar pressure gauge to the test port on the function manifold (schematic item A, AA or DA).

3 Chock both sides of the wheels at the steer end of the machine.

4 Remove the platform controls from the platform.

5 Turn the key switch to platform controls and pull out the red Emergency Stop button to the on position at both ground and platform controls.

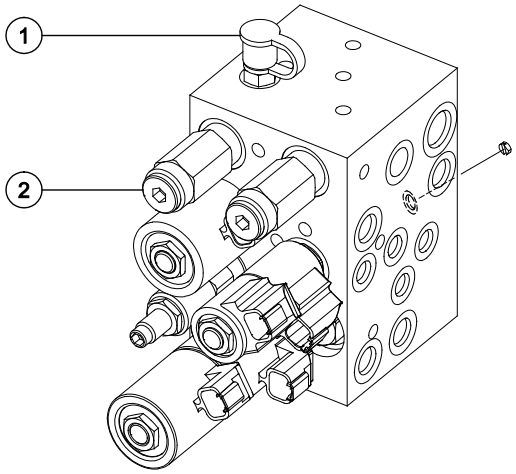

GS-1530/32 and GS-1930/32

1 test port
2 system relief valve

6 Move and hold the joystick fully in either direction while observing the pressure reading on the pressure gauge. Note the pressure. Refer to Specifications, *Hydraulic Component Specifications.*

7 Turn the machine off. Hold the system relief valve with a wrench and remove the cap (schematic item I, AB or DB).

https://truckmanualshub.com/

8 Adjust the internal hex socket. Turn it clockwise to increase the pressure or counterclockwise to decrease the pressure.

DANGER Tip-over hazard. Failure to adjust the relief valves to specification could result in the machine tipping over, causing death or serious injury. Do not adjust the relief valve pressures higher than specifications.

9 Install the relief valve cap.

10 Repeat steps 5 and 6 to confirm the relief valve pressure.

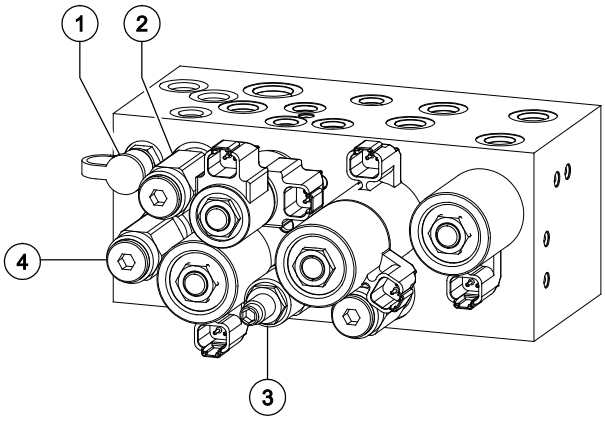

GS-32, GS-46 and GS-47

1 test port
2 system relief valve
3 steer relief valve
4 lift relief valve

How to Adjust the Platform Lift Relief Valve

Note: Perform this test from the ground with the platform controls. Do not stand in the platform.

Note: Verify the hydraulic oil level is at the FULL mark on the hydraulic tank.

1 Locate the system relief valve on the function manifold (schematic item I, AB or DB).

2 Connect a 0 to 5000 psi / 0 to 350 bar pressure gauge to the test port on the function manifold (schematic item A, AA or DA).

3 Chock both sides of the wheels at the steer end of the machine.

4 Remove the platform controls from the platform.

5 Turn the key switch to platform controls and pull out the red Emergency Stop button to the on position at both ground and platform controls.

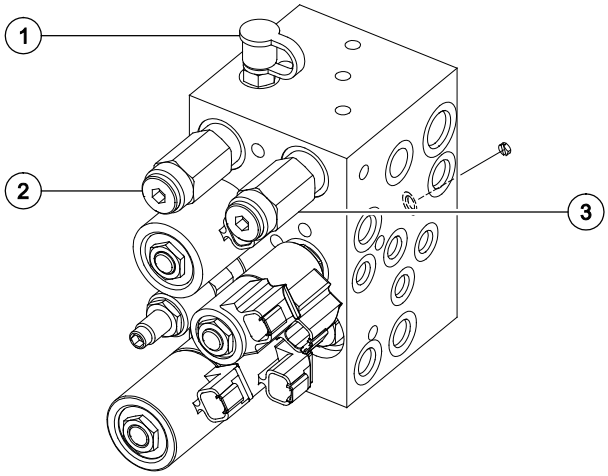

GS-1530/32 and GS-1930/32

1 test port
2 system relief valve
3 lift relief valve

https://truckmanualshub.com/

Manifolds

6 Move and hold the joystick fully in either direction while observing the pressure reading on the pressure gauge. Note the pressure. Refer to Specifications, *Hydraulic Component Specifications.*

7 Turn the machine off. Hold the system relief valve with a wrench and remove the cap (schematic item I, AB or DB).

8 Adjust the internal hex socket. Turn it clockwise to increase the pressure or counterclockwise to decrease the pressure.

DANGER Tip-over hazard. Failure to adjust the relief valves to specification could result in the machine tipping over, causing death or serious injury. Do not adjust the relief valve pressures higher than specifications.

9 Install the relief valve cap.

10 Repeat steps 5 and 6 to confirm the relief valve pressure.

11 Place maximum rated load into the platform. Secure the load to the platform. Refer to Specifications, *Machine Specifications.*

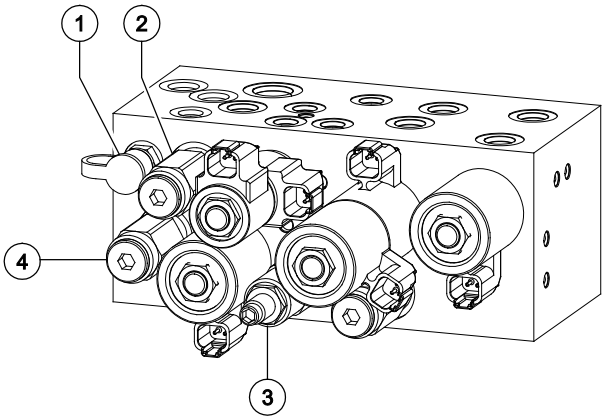

GS-32, GS-46 and GS-47

1 test port
2 system relief valve
3 steer relief valve
4 lift relief valve

12 Turn the key switch to ground control and pull out the red Emergency Stop button to the on position at both ground and platform controls.

13 Hold the lift relief valve with a wrench and remove the cap (schematic item C, AJ or DJ).

14 While activating the platform up function, adjust the internal hex socket clockwise, just until the platform fully rises.

15 Fully lower the platform to the stowed position.

16 Add an additional 50 pounds / 22.7 kg to the platform. Secure the additional weight.

17 Attempt to raise the platform.

⊙ Result: The power unit should **not** be able to lift platform.

⊠ Result: If the power unit lifts the platform, adjust the internal hex nut socket counterclockwise until the platform will not rise.

18 Install the relief valve cap.

19 Remove the weight from the platform.

20 Bleed the hydraulic system by raising the platform to full height. If the pump cavitates or the platform fails to reach full height, add hydraulic oil until the pump is functioning correctly. Do not overfill the hydraulic tank.

https://truckmanualshub.com/

How to Adjust the Lift Pressure Selector Valve (GS-4047 only)

Note: The System Relief Valve and Platform Lift Relief Valve must be adjusted before making an adjustment to the Lift Pressure Selector Valve. Refer to Repair Procedures, *How to Adjust the System Relief Valve* and *How to Adjust the Platform Lift Relief Valve*.

Note: Perform this test from the ground with the platform controls. Do not stand in the platform.

Note: Verify the hydraulic oil level is at the FULL mark on the hydraulic tank.

1 Locate the pressure selector relief valve on the pressure selector manifold (schematic item DM).

2 Connect a 0 to 5000 psi / 0 to 350 bar pressure gauge to the test port on the function manifold (schematic item DA).

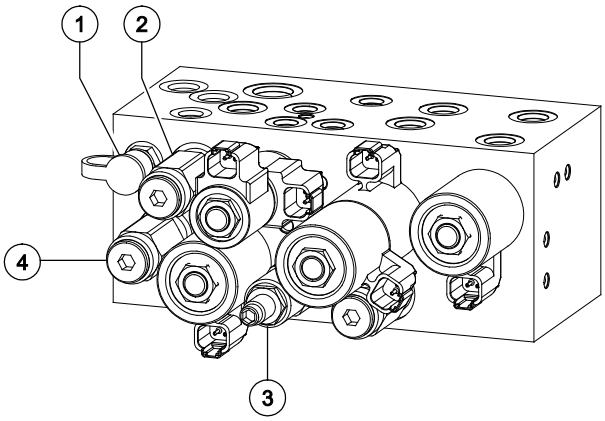

GS-32, GS-46 and GS-47

1 test port
2 system relief valve
3 steer relief valve
4 lift relief valve

3 Using a suitable lifting device, place and secure the maximum rated load in the center of the platform deck.

Maximum load, GS-4047	
GS-4047 (CE and AS models)	770 lbs 350 kg
GS-4047 (ANSI and CSA models)	550 lbs 250 kg

4 Remove the platform controls from the platform.

5 Turn the key switch to platform controls and pull out the red Emergency Stop button to the on position at both ground and platform controls.

6 Press and hold the lift function enable button and the press the platform up button to raise the platform 4 ft / 1.2 m above the stowed position.

⊙ Result: The platform does not rise. Perform steps 7 through 10 to increase the pressure in small increments until the platform rises. Then proceed to step 12.

⊙ Result: The platform rises. Perform steps 7 through 10 to decrease the pressure in small increments until the platform does not rise. Then follow steps 7 through 10 again to increase the pressure in small increments until the platform is able to rise.

7 Turn the machine off. Hold the lift pressure selector valve with a wrench and remove the cap (schematic item DM).

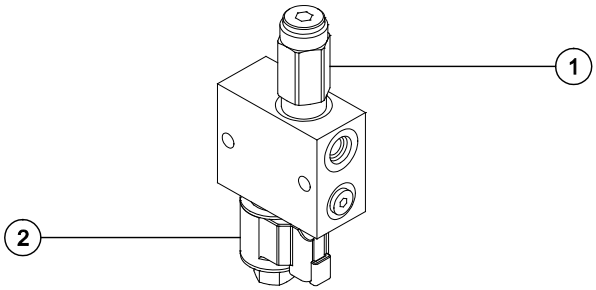

GS-4047

1 lift pressure selector valve
2 solenoid valve

https://truckmanualshub.com/

Manifolds

8 Adjust the internal hex socket. Turn it clockwise to increase the pressure or counterclockwise to decrease the pressure.

DANGER Tip-over hazard. Failure to adjust the relief valves to specification could result in the machine tipping over, causing death or serious injury. Do not adjust the relief valve pressures higher than specifications.

9 Install the relief valve cap.

10 Fully lower the platform to the stowed position.

11 Using a suitable lifting device, add and secure an additional 150 lbs / 68 kg to the platform deck.

12 Raise the platform.

⊙ Result: The platform does not rise. Proceed to step 13.

⊙ Result: The platform rises. Perform steps 7 through 10 to decrease the pressure in small increments until the platform does not rise.

13 Fully lower the platform to the stowed position.

14 Using a suitable lifting device, remove the weight from the platform.

How to Adjust the Steer Relief Valve

Note: Perform this test from the ground with the platform controls. Do not stand in the platform.

Note: Verify the hydraulic oil level is at the FULL mark on the hydraulic tank.

1 Locate the steer relief valve on the function manifold (schematic item G, AH or DH).

2 Connect a 0 to 5000 psi / 0 to 350 bar pressure gauge to the test port on the function manifold (schematic item A, AA or DA).

3 Remove the platform controls from the platform.

4 Turn the key switch to platform controls and pull out the red Emergency Stop button to the on position at both ground and platform controls.

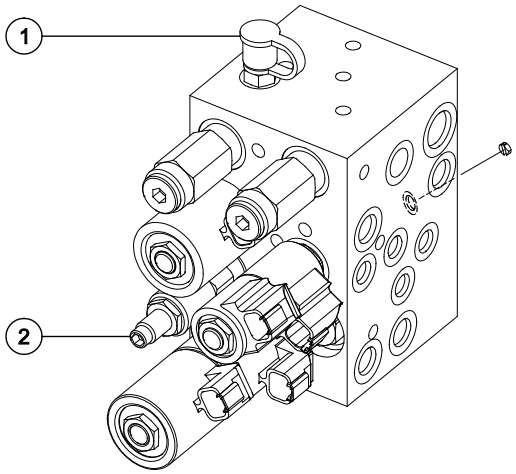

GS-1530/32 and GS-1930/32

1 test port
2 steer relief valve

https://truckmanualshub.com/

5 Activate the function enable switch and press and hold the steer thumb rocker switch to the right. Allow the wheels to completely turn to the right. Continue holding the switch while observing the pressure reading on the pressure gauge. Note the pressure. Refer to Specifications, *Hydraulic Component Specifications..*

6 Press and hold the steer thumb rocker switch to the left. Allow the wheels to completely turn to the left. Continue holding the switch while observing the pressure reading on the pressure gauge.

7 Turn the machine off. Hold the steer relief valve with a wrench and remove the cap (schematic item G, AH or DH).

8 Adjust the internal hex socket. Turn it clockwise to increase the pressure or counterclockwise to decrease the pressure.

NOTICE Component damage hazard. Do not adjust the relief valve pressures higher than specifications.

9 Install the relief valve cap.

10 Repeat steps 5 and 6 to confirm the relief valve pressure.

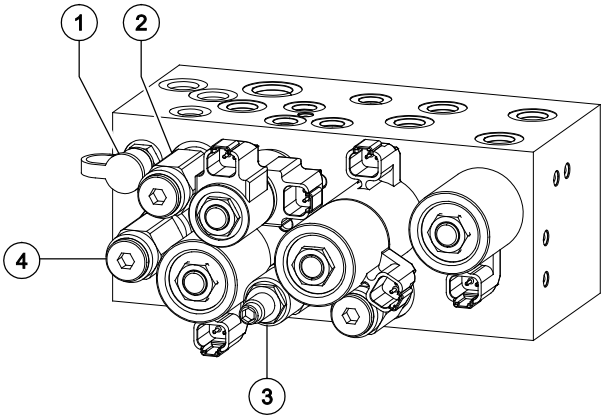

GS-32, GS-46 and GS-47

1 test port
2 system relief valve
3 steer relief valve
4 lift relief valve

https://truckmanualshub.com/

5-9 Valve Coils

How to Test a Coil

A properly functioning coil provides an electromagnetic force which operates the solenoid valve. Critical to normal operation is continuity within the coil. Zero resistance or infinite resistance indicates the coil has failed.

Since coil resistance is sensitive to temperature, resistance values outside specification can produce erratic operation. When coil resistance decreases below specification, amperage increases. As resistance rises above specification, voltage increases.

While valves may operate when coil resistance is outside specification, maintaining coils within specification will help ensure proper valve function over a wide range of operating temperatures.

⚠WARNING Electrocution/burn hazard. Contact with electrically charged circuits could result in death or serious injury. Remove all rings, watches and other jewelry.

Note: If the machine has been in operation, allow the coil to cool at least 3 hours before performing this test.

1 Tag and disconnect the wiring from the coil to be tested.

2 Test the coil resistance using a multimeter set to resistance (W). Refer to the Valve Coil Resistance Specification table.

⊙ Result: If the resistance is not within the adjusted specification, plus or minus 10%, replace the coil.

Valve Coil Resistance Specifications

Note: The following coil resistance specifications are at an ambient temperature of 68°F / 20°C. As valve coil resistance is sensitive to changes in air temperature, the coil resistance will typically increase or decrease by 4% for each 18°F / -7.7°C that your air temperature increases or decreases from 68°F / 20°C.

Description	Specification
Solenoid valve, 3 position 4 way, 20V DC with diode (schematic item F, AC or DC)	27.2Ω
Solenoid valve, 3 position 4 way, 20V DC with diode (schematic item E)	19Ω
Solenoid valve, 2 position 4 way, 20V DC with diode (schematic item H, AI or DI)	19Ω
Solenoid valve, 2 position 2 way, N.C. 20V DC with diode (schematic item N)	25Ω
Solenoid valve, 2 position 4 way, 20V DC with diode (schematic item AE or DE)	19Ω
Solenoid valve, 3 position 5 way, 20V DC with diode (schematic item AG or DG)	19Ω
Solenoid valve, 2 position 2 way, 20V DC with diode (schematic item CA, CB, CC and CD	27.2Ω
Solenoid valve, 3 position 4 way, 20V DC with diode (schematic item BA)	19Ω
Proportional solenoid valve, 2 position 2 way, 20V DC with diode (schematic item DN)	23.9Ω

https://truckmanualshub.com/

How to Test a Coil Diode

Genie incorporates spike suppressing diodes in all of its coils. Properly functioning coil diodes protect the electrical circuit by suppressing voltage spikes. Voltage spikes naturally occur within a function circuit following the interruption of electrical current to a coil. Faulty diodes can fail to protect the electrical system, resulting in a tripped circuit breaker or component damage.

⚠WARNING Electrocution/burn hazard. Contact with electrically charged circuits could result in death or serious injury. Remove all rings, watches and other jewelry.

1 Test the coil resistance. Refer to Repair Procedure, *How to Test a Coil*.

2 Connect a 10Ω resistor to the negative terminal of a known good 9V DC battery. Connect the other end of the resistor to a terminal on the coil.

Note: The battery should read 9V DC or more when measured across the terminals.

Resistor, 10Ω	
Genie part number	27287

3 Set a multimeter to read DC amperage.

Note: The multimeter, when set to read DC amperage, should be capable of reading up to 800 mA.

4 Connect the negative lead to the other terminal on the coil.

Note: If testing a single terminal coil, connect the negative lead to the internal metallic ring at either end of the coil.

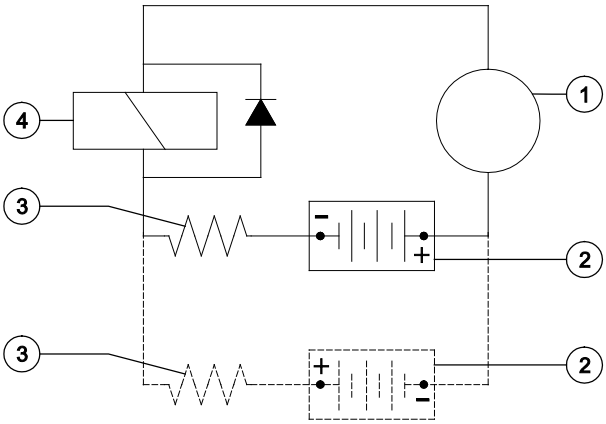

1 multimeter
2 9V DC battery
3 10Ω resistor
4 coil

Note: Dotted lines in illustration indicate a reversed connection as specified in step 6.

5 Momentarily connect the positive lead from the multimeter to the positive terminal on the 9V battery. Note and record the reading.

6 At the battery or coil terminals, reverse the connections. Note and record the current reading.

⊙ Result: Both current readings are greater than 0 mA and are different by a minimum of 20%. The coil is good.

⊠ Result: if one or both current readings are greater than 0 mA, or if the two current readings do not differ by a minimum of 20%, the coil and/or its internal diode are faulty and the coil should be replaced.

https://truckmanualshub.com/

Steer Axle Components

6-1
Yoke and Drive Motor

How to Remove the Yoke and Drive Motor

Note: When removing a hose assembly or fitting, the O-ring (if equipped) on the fitting and/or hose end must be replaced. All connections must be torqued to specification during installation. Refer to Specifications, *Hydraulic Hose and Fitting Torque Specifications.*

1 Block the non-steer tires.

2 Remove the cotter pin from the wheel castle nut.

Note: Always replace the cotter pin with a new one when removing the castle nut.

3 Loosen the wheel castle nut. Do not remove it.

4 Center a lifting jack under the drive chassis at the steer end of the machine.

5 Raise the machine approximately 6 inches / 15 cm. Place blocks under the chassis for support.

WARNING Crushing hazard. The chassis will fall if not properly supported.

6 Remove the wheel castle nut. Remove the wheel.

7 Tag, disconnect and plug the hydraulic hoses on the drive motor. Cap the fittings on the drive motor.

WARNING Bodily injury hazard. Spraying hydraulic oil can penetrate and burn skin. Loosen hydraulic connections very slowly to allow the oil pressure to dissipate gradually. Do not allow oil to squirt or spray.

NOTICE Component damage hazard. Hoses can be damaged if they are kinked or pinched.

8 Support and secure the yoke assembly to an appropriate lifting device.

9 Remove the retaining fastener from the steer link at the yoke assembly.

Note: While removing the retaining fasteners, take note of the quantity and location of the spacers when disconnecting the steer link from the yoke assembly.

10 Remove the retaining fastener from the top of the yoke pivot shaft.

Note: The pivot shaft retaining fastener is located above the main deck.

11 Lower the yoke assembly out of the chassis.

CAUTION Bodily injury hazard. The yoke/motor assembly may fall if not properly supported when it is removed from the chassis.

https://truckmanualshub.com/

How to Remove a Drive Motor

1 Block the non-steer tires.

2 Remove the cotter pin from the wheel castle nut of the motor to be removed.

3 Note: Always replace the cotter pin with a new one when removing the castle nut.

4 Loosen the wheel castle nut. Do not remove it.

5 Raise the machine approximately 2 inches / 5 cm. Place blocks under the chassis for support.

WARNING Crushing hazard. The chassis will fall if not properly supported.

6 Remove the wheel castle nut. Remove the wheel.

7 Tag, disconnect and plug the hydraulic hoses on the drive motor. Cap the fittings on the drive motor.

WARNING Bodily injury hazard. Spraying hydraulic oil can penetrate and burn skin. Loosen hydraulic connections very slowly to allow the oil pressure to dissipate gradually. Do not allow oil to squirt or spray.

NOTICE Component damage hazard. Hoses can be damaged if they are kinked or pinched.

8 Remove the drive motor mounting fasteners. Remove the motor.

Torque specifications	
Drive motor mounting fasteners, dry	75 ft-lbs 101.7 Nm
Drive motor mounting fasteners, lubricated	56 ft-lbs 76.3 Nm

6-2 Steer Cylinder

How to Remove the Steer Cylinder

Note: When removing a hose assembly or fitting, the O-ring (if equipped) on the fitting and/or hose end must be replaced. All connections must be torqued to specification during installation. Refer to Specifications, *Hydraulic Hose and Fitting Torque Specifications.*

1 Block the non-steer tires.

2 Remove the pin retaining fasteners from the rod-end pivot pin. Remove the pivot pin.

Note: While removing the pin retaining fasteners, take note of the quantity and location of the spacers when removing the pivot pin.

3 Remove the pin retaining fasteners from the barrel-end pivot pin. Remove the pin.

Note: While removing the pin retaining fasteners, take note of the quantity and location of the spacers when removing the pivot pin.

4 Remove the steer cylinder from the machine.

5 Tag, disconnect and plug the hydraulic hoses from the steer cylinder. Cap the fittings on the cylinder.

WARNING Bodily injury hazard. Spraying hydraulic oil can penetrate and burn skin. Loosen hydraulic connections very slowly to allow the oil pressure to dissipate gradually. Do not allow oil to squirt or spray.

NOTICE Component damage hazard. Hoses can be damaged if they are kinked or pinched.

https://truckmanualshub.com/

Steer Axle Components

6-3
Steer Bellcrank

How to Remove the Steer Bellcrank

1 Remove the steer cylinder. Refer to Repair Procedure, *How to Remove the Steer Cylinder.*

2 Remove the retaining fasteners from the steer links at each end of the bellcrank.

Note: While removing the retaining fasteners, take note of the quantity and location of the spacers between the bellcrank and the steer links.

3 Center a lifting jack under the drive chassis at the steer end of the machine.

4 Raise the machine approximately 14 inches / 36 cm. Place blocks under the chassis for support.

WARNING Crushing hazard. The chassis will fall if not properly supported.

5 Turn the yokes to the side so the bellcrank can be removed.

6 Remove the bellcrank from the machine.

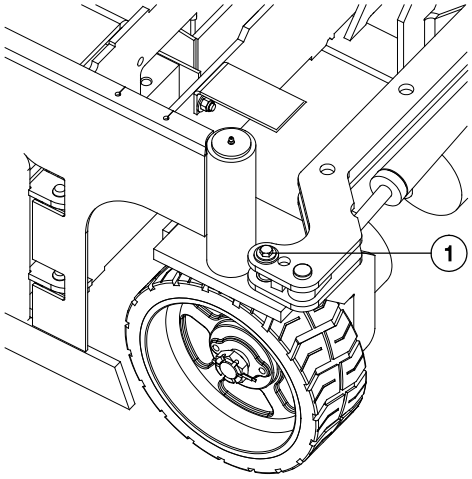

1 apply removable thread lock to fastener threads

Note: While removing the bellcrank from the machine, take note of the quantity and location of the spacers between the bellcrank and the steer links.

Note: Before re-installing the steer bellcrank onto the machine, apply a small amount of removable thread lock onto the threads of the fasteners. Torque the fasteners to 31 ft-lbs / 42 Nm.

https://truckmanualshub.com/

7-1
Drive Brake

How to Remove the Drive Brake

Note: When removing a hose assembly or fitting, the O-ring (if equipped) on the fitting and/or hose end must be replaced. All connections must be torqued to specification during installation. Refer to Specifications, *Hydraulic Hose and Fitting Torque Specifications.*

1 Support and secure the entry ladder to an appropriate lifting device.

2 Remove the entry ladder mounting fasteners. Remove the entry ladder from the machine.

⚠ CAUTION Crushing hazard. The entry ladder will fall if not properly supported and secured to the lifting device.

3 Block the steer wheels.

4 Remove the cotter pin from the wheel castle nut.

Note: Always replace the cotter pin with a new one when removing the castle nut.

5 Loosen the wheel castle nut. Do not remove it.

6 Center a lifting jack under the drive chassis at the non-steer end of the machine.

7 Raise the machine approximately 2 inches / 5 cm. Place blocks under the chassis for support.

⚠ WARNING Crushing hazard. The chassis will fall if not properly supported.

8 Remove the wheel castle nut. Remove the wheel.

9 Tag, disconnect and plug the hydraulic hose from the brake. Cap the fitting on the brake.

⚠ WARNING Bodily injury hazard. Spraying hydraulic oil can penetrate and burn skin. Loosen hydraulic connections very slowly to allow the oil pressure to dissipate gradually. Do not allow oil to squirt or spray.

10 Place a lifting jack under the brake for support.

11 Remove the fasteners that attach the brake to the drive chassis. Remove the brake.

⚠ CAUTION Crushing hazard. The brake will fall if not properly supported when the mounting fasteners are removed.

Torque specifications	
Brake mounting fasteners, dry	75 ft-lbs 102 Nm
Brake mounting fasteners, lubricated	56 ft-lbs 76 Nm

https://truckmanualshub.com/

Brake Release Hand Pump Components

8-1
Brake Release Hand Pump Components

The brake release hand pump manifold is mounted behind the entry ladder.

Index No.	Description	Schematic Item	Function	Torque
1	Hand pump	L	Manual brake release	30 ft-lbs / 41 Nm
2	Needle valve	M	Manual brake release enable	45-50 in-lbs / 5 Nm

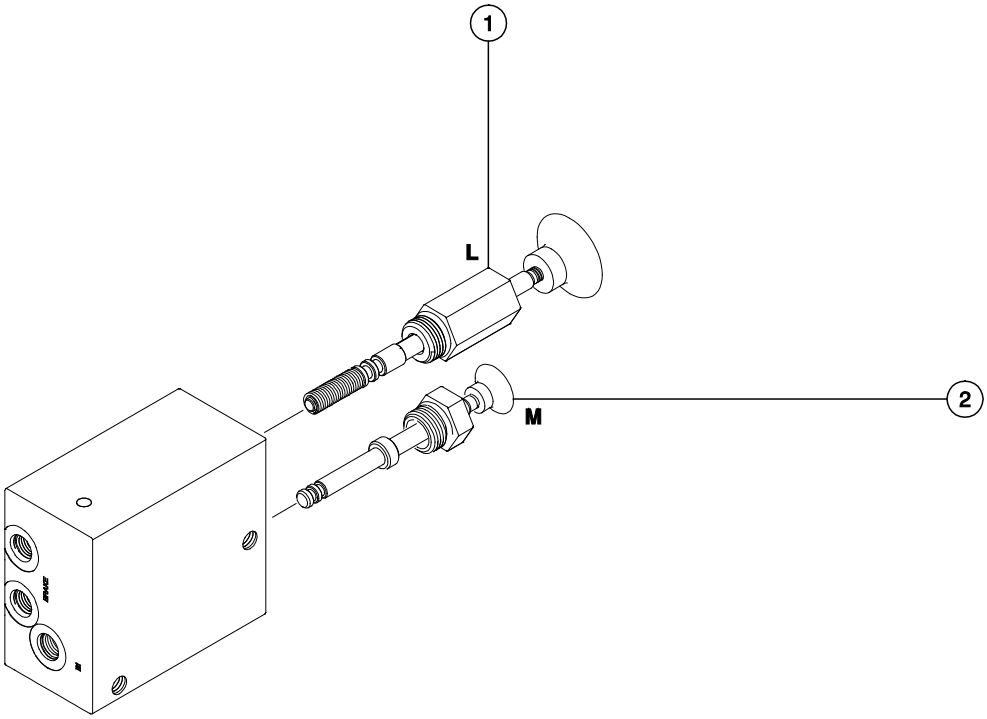

Note: 'alpha' callouts refer to corresponding notes on the hydraulic schematic.

https://truckmanualshub.com/

Scissor Components

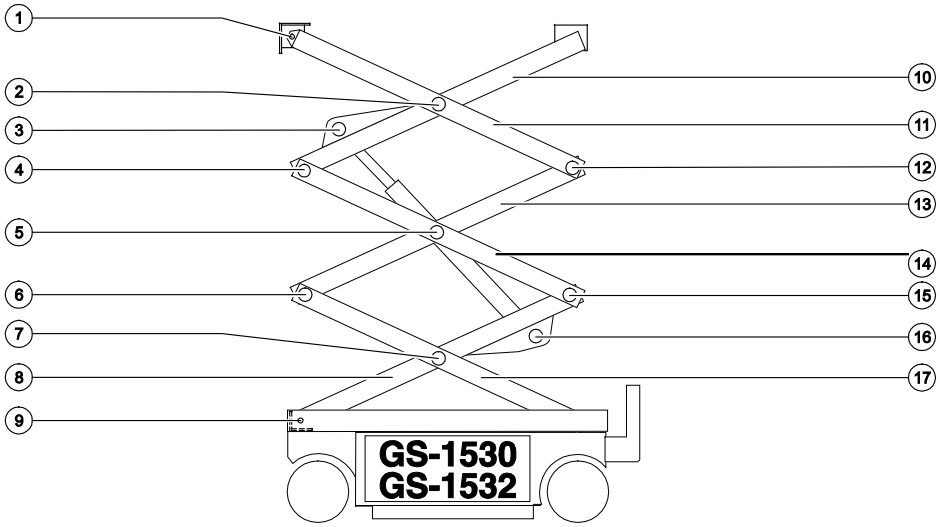

Steer End	Non-steer End
1 - Number 4 pivot pin	10 - Number 3 inner arm
2 - Number 3 center pivot pin (Qty. 2)	11 - Number 3 outer arm
3 - Lift cylinder rod-end pivot pin	12 - Number 3 pivot pin (non-steer end)
4 - Number 3 pivot pin (steer end)	13 - Number 2 inner arm
5 - Number 2 center pivot pin (Qty. 2)	14 - Number 2 outer arm
6 - Number 2 pivot pin (steer end)	15 - Number 2 pivot pin (non-steer end)
7 - Number 1 center pivot pin (Qty. 2)	16 - Lift cylinder barrel-end pivot pin
8 - Number 1 inner arm	17 - Number 1 outer arm
9 - Number 1 pivot pin	

https://truckmanualshub.com/

Scissor Components

9-1 Scissor Assembly, GS-1530 and GS-1532

How to Disassemble the Scissor Assembly

WARNING Bodily injury hazard. The procedures in this section require specific repair skills, lifting equipment and a suitable workshop. Attempting this procedure without these skills and tools could result in death or serious injury and significant component damage. Dealer service is required.

Note: When removing a hose assembly or fitting, the O-ring (if equipped) on the fitting and/or hose end must be replaced. All connections must be torqued to specification during installation. Refer to Specifications, *Hydraulic Hose and Fitting Torque Specifications.*

Note: Machines equipped with a Platform Height Sensor, begin the Scissor Disassembly procedure at step 1. Machines without a Platform Height Sensor, begin the Scissor Disassembly procedure at step 24.

1 Turn the key switch to ground controls and pull out the red Emergency Stop button to the on position at both ground and platform controls.

2 Raise the platform 7 to 8 feet / 2.1 to 2.4 m.

3 Lift the safety arm, move it to the center of the scissor arm and rotate down to a vertical position.

4 Lower the platform onto the safety arm.

WARNING Crushing hazard. Keep hands clear of the safety arm when lowering the platform.

5 At the ground controls, turn the key switch to the off position and push in the red Emergency Stop button to the off position.

6 Disconnect the battery pack from the machine.

WARNING Electrocution/burn hazard. Contact with electrically charged circuits could result in death or serious injury. Remove all rings, watches and other jewelry.

7 Remove the fasteners securing the large platform height sensor cover to the large platform height sensor bracket.

8 Remove the platform height sensor cover.

9 Tag and disconnect the platform height sensor from the platform height sensor harness.

10 Remove the fastener securing the platform height sensor assembly to the number 1 inner arm.

11 Remove the platform height sensor assembly from the number 1 pivot pin.

12 Remove the plastic nut securing the squeeze connector to the large platform height sensor bracket.

13 Remove the squeeze connector from the large platform height sensor bracket.

14 Remove the fasteners securing the large platform height sensor bracket to the number 1 inner arm pivot bracket.

15 Remove the large platform height sensor bracket from the number 1 inner arm pivot bracket.

https://truckmanualshub.com/

Scissor Components

16 Install the fasteners removed in 14 to the number 1 inner arm pivot bracket and chassis.

17 Connect the battery pack to the machine.

18 Turn the key switch to ground controls.

19 Press and hold the ground control scroll up and scroll down buttons.

20 Pull out the red Emergency Stop button to the on position at the ground controls.

21 Using the ground control menu buttons, navigate to Service Override Mode. Select Service Override Mode.

Note: The machine must be in Service Override Mode to raise the platform. While in Service Override Mode, only the GCON will operate with limited functionality. The platform will raise a predetermined amount of time and stop.

22 Raise the platform and rotate the safety arm to the stowed position.

23 Fully lower the platform to the stowed position.

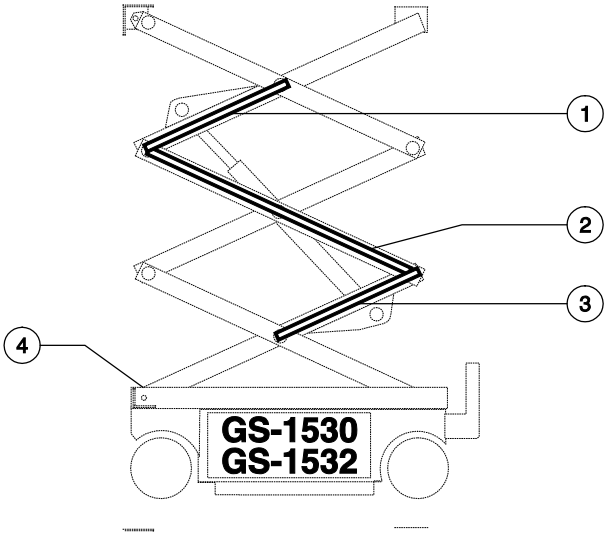

Cable bridge and platform height sensor

1 cable bridge 3
2 cable bridge 2
3 cable bridge 1
4 platform height sensor

24 Remove the platform. Refer to Repair Procedure, *How to Remove the Platform.*

25 Remove the cables from the number 3 outer arm (index #11) at the ground controls side.

NOTICE Component damage hazard. Cables can be damaged if they are kinked or pinched.

26 Remove the cables from the number 3 cable bridge and lay them off to the side.

NOTICE Component damage hazard. Cables can be damaged if they are kinked or pinched.

27 Attach a lifting strap from an overhead crane to the number 3 outer arm (index #11).

28 Remove the external snap rings and retaining fasteners from the number 3 center pivot pins (index #2).

29 Use a soft metal drift to remove the number 3 center pivot pins (index #2).

30 Remove the retaining fasteners from the number 3 pivot pin (index #12) at the non-steer end of the machine.

31 Use a soft metal drift to remove the number 3 pivot pin (index #12) from the non-steer end of the machine. Remove the number 3 outer arm (index #11) from the machine.

⚠WARNING Crushing hazard. The number 3 outer arm may become unbalanced and fall if not properly supported when removed from the machine.

32 Remove the number 3 cable bridge mounting fasteners and remove the cable bridge from the machine.

33 Attach a lifting strap from an overhead crane to the lug on the rod end of the lift cylinder for support. Do not apply any lifting pressure.

https://truckmanualshub.com/

Scissor Components

34 Remove the pin retaining fasteners from the lift cylinder rod-end pivot pin (index #3). Use a soft metal drift to remove the pin.

⚠ CAUTION Bodily injury hazard. The cylinder may fall when the rod-end pivot pin is removed if not properly supported.

35 Lower the cylinder onto the number 1 inner arm (index #8).

NOTICE Component damage hazard. Cables can be damaged if they are kinked or pinched.

36 Attach a lifting strap from an overhead crane to the number 3 inner arm (index #10).

37 Remove the retaining fasteners from the number 3 pivot pin (index #4) at the steer end.

38 Use a soft metal drift to remove the number 3 pivot pin (index #4). Remove the number 3 inner arm (index #10) from the machine.

⚠ CAUTION Bodily injury hazard. The number 3 inner arm may become unbalanced and fall if not properly supported when removed from the machine.

39 Remove the cables from the number 2 cable bridge and lay them off to the side.

NOTICE Component damage hazard. Cables can be damaged if they are kinked or pinched.

40 Remove the external snap rings and retaining fasteners from the number 2 center pivot pin (index #5) at the ground controls side.

41 Remove the number 2 cable bridge mounting fasteners and remove the cable bridge from the machine.

42 Attach a lifting strap from an overhead crane to the number 2 outer arm (index #14) at the ground controls side.

43 Use a soft metal drift to remove the number 2 center pivot pin (index #5) at the ground controls side.

44 Remove the retaining fasteners from the number 2 pivot pin (index #15) at the non-steer end of the machine.

45 Use a soft metal drift to tap the number 2 pivot pin (index #15) halfway out at the non-steer end of the machine. Remove the number 2 outer arm (index #14) from the ground controls side of the machine.

⚠ CAUTION Bodily injury hazard. The number 2 outer arm at the ground controls side may become unbalanced and fall if not properly supported when removed from the machine.

46 Attach a lifting strap from an overhead crane to the number 2 outer arm (index #14) at the battery pack side.

47 Remove the external snap rings and retaining fasteners from the number 2 center pivot pin (index #5) at the battery pack side.

48 Use a soft metal drift to remove the number 2 center pivot pin (index #5) at the battery pack side.

⚠ CAUTION Bodily injury hazard. The number 2 outer arm at the battery pack side may become unbalanced and fall if not properly supported when removed from the machine.

https://truckmanualshub.com/

49 Use a soft metal drift to tap the number 2 pivot pin (index #15) in the other direction at the non-steer end. Remove the number 2 outer arm (index #14) from the battery pack side of the machine.

⚠ CAUTION Bodily injury hazard. The number 2 outer arm at the battery pack side may become unbalanced and fall if not properly supported when removed from the machine.

50 Attach a lifting strap from an overhead crane to the number 2 inner arm (index #13).

51 Remove the retaining fasteners from the number 2 pivot pin (index #6) at the steer end of the machine.

52 Use a soft metal drift to remove the number 2 pivot pin (index #6). Remove the number 2 inner arm (index #13) from the machine.

⚠ CAUTION Bodily injury hazard. The number 2 inner arm may become unbalanced and fall if not properly supported when removed from the machine.

53 Remove the safety arm from the number 2 inner arm (index #13) that was just removed.

54 Attach a lifting strap from an overhead crane to the number 1 inner arm (index #8).

55 Raise the number 1 inner arm (index #8) approximately 2 feet / 60 cm and install the safety arm between the number 1 inner arm (index #8) and the number 1 outer arm (index #17). Lower the scissor arms onto the safety arm.

⚠ CAUTION Bodily injury hazard. Keep hands clear of moving parts when lowering the scissor arms onto the safety arm.

56 Attach a lifting strap from an overhead crane to the lug on the rod end of the lift cylinder (index #3). Raise the lift cylinder approximately 3 ft / 1 m.

57 Tag, disconnect and plug the hydraulic hoses on the lift cylinder. Cap the fittings on the cylinder.

⚠ WARNING Bodily injury hazard. Spraying hydraulic oil can penetrate and burn skin. Loosen hydraulic connections very slowly to allow the oil pressure to dissipate gradually. Do not allow oil to squirt or spray.

58 Tag and disconnect the wires and manual lowering cable from the solenoid valve on the cylinder.

59 **Models with platform overload option:** Tag and disconnect the wire harness from the platform overload pressure transducer.

Note: After replacing the scissor assembly, the platform overload system must be calibrated. Refer to Repair Procedure, *How to Calibrate the Platform Overload System (if equipped).*

60 Raise the lift cylinder to a vertical position.

61 Remove the pin retaining fasteners from the lift cylinder barrel-end pin (index #16). Use a soft metal drift to remove the pin. Remove the lift cylinder from the machine.

⚠ CAUTION Crushing hazard. The lift cylinder will become unbalanced and fall if not properly supported and secured to the lifting device.

NOTICE Component damage hazard. Be careful not to damage the valve or fittings on the cylinder while removing it from the machine.

https://truckmanualshub.com/

Scissor Components

62 Place a 4 x 4 x 48 inch / 10 cm x 10 cm x 1.2 m long block across both sides of the chassis under the number 1 center pivot pin (index #7).

63 Attach a lifting strap from an overhead crane to the number 1 inner arm (index #8) at the non-steer end. Raise the number 1 inner arm and remove the safety arm. Lower the number 1 inner arm (index #8) onto the block that was placed across the chassis.

⚠ CAUTION Bodily injury hazard. Keep hands clear of moving parts when lowering the scissor arms.

64 Remove the cables from the number 1 cable bridge and lay them off to the side.

NOTICE Component damage hazard. Cables can be damaged if they are kinked or pinched.

65 Support and secure the entry ladder to an appropriate lifting device.

66 Remove the fasteners from the entry ladder and remove the entry ladder from the machine.

⚠ CAUTION Crushing hazard. The entry ladder will fall if not properly supported and secured to the lifting device.

67 Attach a lifting strap from an overhead crane to the number 1 outer arm (index #17). Do not apply any lifting pressure.

68 Remove the external snap rings and retaining fasteners from the number 1 center pivot pins (index #7).

69 Remove the number 1 cable bridge from the machine.

70 Use a soft metal drift to remove the number 1 center pivot pins (index #7).

⚠ CAUTION Bodily injury hazard. The number 1 outer arm may become unbalanced and fall if not properly supported when the pin is removed.

71 Slide the number 1 outer arm (index #17) to the non-steer end and remove it from the machine.

⚠ CAUTION Bodily injury hazard. The number 1 outer arm may become unbalanced and fall if not properly supported when removed from the machine.

72 Attach the strap from an overhead crane to the number 1 inner arm (index #8). Do not lift it.

73 Remove the upper fasteners securing the number 1 inner arm pivot bracket to the end of the chassis. Loosen the lower fasteners.

74 Remove the number 1 inner arm (index #8) from the machine.

⚠ CAUTION Bodily injury hazard. The number 1 inner arm may become unbalanced and fall if not properly supported when removed from the machine.

NOTICE Component damage hazard. Be sure not to damage the limit switch or level sensor components when the number 1 inner arm is removed from the machine.

https://truckmanualshub.com/

Scissor Components

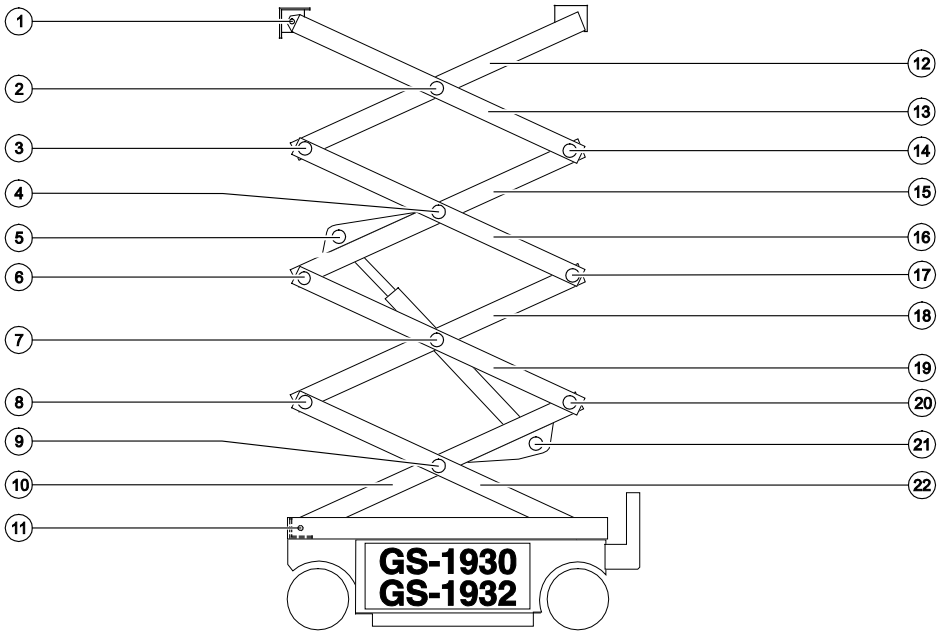

Steer End	Non-steer End
1 - Number 5 pivot pin	12 - Number 4 inner arm
2 - Number 4 center pivot pin (Qty. 2)	13 - Number 4 outer arm
3 - Number 4 pivot pin (steer end)	14 - Number 4 pivot pin (non-steer end)
4 - Number 3 center pivot pin (Qty. 2)	15 - Number 3 inner arm
5 - Lower lift cylinder rod-end pivot pin	16 - Number 3 outer arm
6 - Number 3 pivot pin (steer end)	17 - Number 3 pivot pin (non-steer end)
7 - Number 2 center pivot pin (Qty. 2)	18 - Number 2 inner arm
8 - Number 2 pivot pin (steer end)	19 - Number 2 outer arm
9 - Number 1 center pivot pin (Qty. 2)	20 - Number 2 pivot pin (non-steer end)
10 - Number 1 inner arm	21 - Lower lift cylinder barrel-end pivot pin
11 - Number 1 pivot pin	22 - Number 1 outer arm

https://truckmanualshub.com/

Scissor Components

9-2 Scissor Assembly, GS-1930 and GS-1932

How to Disassemble the Scissor Assembly

WARNING Bodily injury hazard. The procedures in this section require specific repair skills, lifting equipment and a suitable workshop. Attempting this procedure without these skills and tools could result in death or serious injury and significant component damage. Dealer service is required.

Note: When removing a hose assembly or fitting, the O-ring (if equipped) on the fitting and/or hose end must be replaced. All connections must be torqued to specification during installation. Refer to Specifications, *Hydraulic Hose and Fitting Torque Specifications.*

Note: Machines equipped with a Platform Height Sensor, begin the Scissor Disassembly procedure at step 1. Machines without a Platform Height Sensor, begin the Scissor Disassembly procedure at step 24.

1 Turn the key switch to ground controls and pull out the red Emergency Stop button to the on position at both ground and platform controls.

2 Raise the platform 7 to 8 feet / 2.1 to 2.4 m.

3 Lift the safety arm, move it to the center of the scissor arm and rotate down to a vertical position.

4 Lower the platform onto the safety arm.

WARNING Crushing hazard. Keep hands clear of the safety arm when lowering the platform.

5 At the ground controls, turn the key switch to the off position and push in the red Emergency Stop button to the off position.

6 Disconnect the battery pack from the machine.

WARNING Electrocution/burn hazard. Contact with electrically charged circuits could result in death or serious injury. Remove all rings, watches and other jewelry.

7 Remove the fasteners securing the large platform height sensor cover to the large platform height sensor bracket.

8 Remove the platform height sensor cover.

9 Tag and disconnect the platform height sensor from the platform height sensor harness.

10 Remove the fastener securing the platform height sensor assembly to the number 1 inner arm.

11 Remove the platform height sensor assembly from the number 1 pivot pin.

12 Remove the plastic nut securing the squeeze connector to the large platform height sensor bracket.

13 Remove the squeeze connector from the large platform height sensor bracket.

14 Remove the fasteners securing the large platform height sensor bracket to the number 1 inner arm pivot bracket.

https://truckmanualshub.com/

15 Remove the large platform height sensor bracket from the number 1 inner arm pivot bracket.

16 Install the fasteners removed in 14 to the number 1 inner arm pivot bracket and chassis.

DANGER Tip-over hazard. Failure to install the fasteners securing the number 1 inner arm pivot bracket to the chassis, could result in the machine tipping over, causing death or serious injury.

17 Connect the battery pack to the machine.

18 Turn the key switch to ground controls.

19 Press and hold the ground control scroll up and scroll down buttons.

20 Pull out the red Emergency Stop button to the on position at the ground controls.

21 Using the ground control menu buttons, navigate to Service Override Mode. Select Service Override Mode.

Note: The machine must be in Service Override Mode to raise the platform. While in Service Override Mode, only the GCON will operate with limited functionality. The platform will raise a predetermined amount of time and stop.

22 Raise the platform and rotate the safety arm to the stowed position.

23 Fully lower the platform to the stowed position.

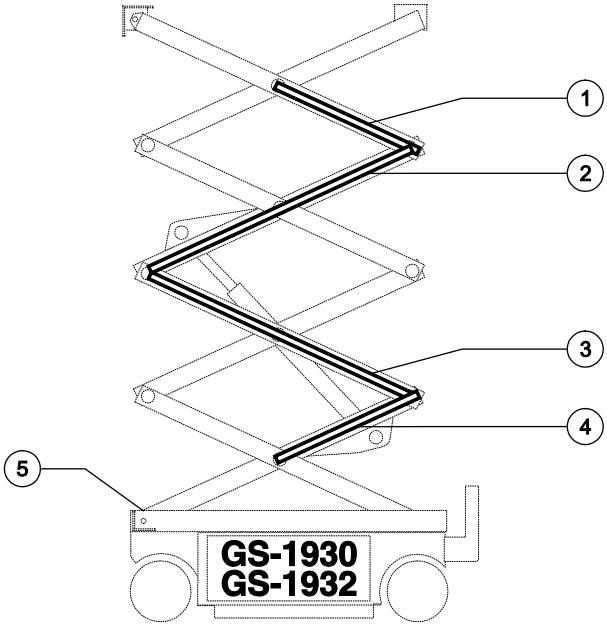

Cable bridge and platform height sensor

1 cable bridge 4
2 cable bridge 3
3 cable bridge 2
4 cable bridge 1
5 platform height sensor

24 Remove the platform. Refer to Repair Procedure, *How to Remove the Platform.*

25 Remove the cables from the number 4 outer arm (index #13) at the ground controls side.

NOTICE Component damage hazard. Cables can be damaged if they are kinked or pinched.

26 Remove the cables from the number 4 cable bridge and lay them off to the side.

NOTICE Component damage hazard. Cables can be damaged if they are kinked or pinched.

https://truckmanualshub.com/

Scissor Components

27 Attach a lifting strap from an overhead crane to the number 4 outer arm (index #13).

28 Remove the external snap rings and retaining fasteners from the number 4 center pivot pins (index #2).

29 Use a soft metal drift to remove the number 4 center pivot pins (index #2).

30 Remove the retaining fasteners from the number 4 pivot pin (index #14) at the non-steer end of the machine.

31 Use a soft metal drift to remove the number 4 pivot pin (index #14) from the non-steer end of the machine. Remove the number 4 outer arm (index #13) from the machine.

WARNING Crushing hazard. The number 4 outer arm may become unbalanced and fall if not properly supported when removed from the machine.

32 Remove the number 4 cable bridge mounting fasteners and remove the cable bridge from the machine.

33 Attach a lifting strap from an overhead crane to the number 4 inner arm (index #12).

34 Remove the retaining fasteners from the number 4 pivot pin (index #3).

35 Use a soft metal drift to remove the number 4 pivot pin (index #3) at the steer end. Remove the number 4 inner arm (index #12) from the machine.

CAUTION Crushing hazard. The number 4 inner arm may become unbalanced and fall if not properly supported when removed from the machine.

36 Remove the cables from the number 3 cable bridge and lay them off to the side.

NOTICE Component damage hazard. Cables can be damaged if they are kinked or pinched.

37 Remove the number 3 cable bridge mounting fasteners and remove the cable bridge from the machine.

38 Attach a lifting strap from an overhead crane to the number 3 outer arm (index #4) at the ground controls side.

39 Remove the external snap rings and retaining fasteners from the number 3 center pivot pins (index #4).

40 Use a soft metal drift to remove the number 3 center pivot pin (index #4) at the ground control side.

41 Remove the retaining fasteners from the number 3 pivot pin (index #17) at the non-steer end of the machine.

https://truckmanualshub.com/

42 Use a soft metal drift to tap the number 3 pivot pin (index #17) halfway out at the non-steer end of the machine. Remove the number 3 outer arm (index #16) at the ground controls side from the machine.

CAUTION Bodily injury hazard. The number 3 outer arm at the ground controls side may become unbalanced and fall if not properly supported when removed from the machine.

43 Attach a lifting strap from an overhead crane to the number 3 outer arm (index #16) at the battery pack side.

44 Use a soft metal drift to remove the number 3 center pivot pin (index #4) at the battery pack side of the machine.

45 Use a soft metal drift to tap the number 3 pivot pin (index #17) in the other direction. Remove the number 3 outer arm (index #16) from the battery pack side of the machine.

CAUTION Bodily injury hazard. The number 3 outer arm at the battery pack side may become unbalanced and fall if not properly supported when removed from the machine.

46 Remove the number 3 pivot pin (index #17) from the non-steer end of the machine.

47 Attach a lifting strap from an overhead crane to the lug on the rod end of the lift cylinder for support. Do not apply any lifting pressure.

48 Remove the pin retaining fasteners from the lift cylinder rod-end pivot pin (index #5). Use a soft metal drift to remove the pin.

CAUTION Bodily injury hazard. The cylinder may fall when the rod-end pivot pin is removed if not properly supported.

49 Lower the cylinder onto the number 1 inner arm (index #9).

NOTICE Component damage hazard. Cables can be damaged if they are kinked or pinched.

50 Attach a lifting strap from an overhead crane to the number 3 inner arm (index #15).

51 Remove the retaining fasteners from the number 3 pivot pin (index #6) at the steer end.

52 Use a soft metal drift to remove the number 3 pivot pin (index #6). Remove the number 3 inner arm (index #15) from the machine.

CAUTION Bodily injury hazard. The number 3 inner arm may become unbalanced and fall if not properly supported when removed from the machine.

53 Remove the cables from the number 2 cable bridge and lay them off to the side.

NOTICE Component damage hazard. Cables can be damaged if they are kinked or pinched.

54 Remove the external snap rings and retaining fasteners from the number 2 center pivot pin (index #7) at the ground controls side.

https://truckmanualshub.com/

Scissor Components

55 Remove the number 2 cable bridge mounting fasteners and remove the cable bridge from the machine.

56 Attach a lifting strap from an overhead crane to the number 2 outer arm (index #19) at the ground controls side.

57 Use a soft metal drift to remove the number 2 center pivot pin (index #7) at the ground controls side.

58 Remove the retaining fasteners from the number 2 pivot pin (index #20) at the non-steer end of the machine.

59 Use a soft metal drift to tap the number 2 pivot pin (index #20) halfway out at the non-steer end of the machine. Remove the number 2 outer arm (index #19) from the ground controls side of the machine.

⚠ CAUTION Bodily injury hazard. The number 2 outer arm at the ground controls side may become unbalanced and fall if not properly supported when removed from the machine.

60 Attach a lifting strap from an overhead crane to the number 2 outer arm (index #19) at the battery pack side.

61 Remove the external snap rings and retaining fasteners from the number 2 center pivot pin (index #7) at the battery pack side.

62 Use a soft metal drift to remove the number 2 center pivot pin (index #7) at the battery pack side.

⚠ CAUTION Bodily injury hazard. The number 2 outer arm at the battery pack side may become unbalanced and fall if not properly supported when removed from the machine.

63 Use a soft metal drift to tap the number 2 pivot pin (index #20) in the other direction at the non-steer end. Remove the number 2 outer arm (index #19) from the battery pack side of the machine.

⚠ CAUTION Bodily injury hazard. The number 2 outer arm at the battery pack side may become unbalanced and fall if not properly supported when removed from the machine.

64 Remove the number 3 pivot pin (index #17) from the non-steer end of the machine.

65 Attach a lifting strap from an overhead crane to the number 2 inner arm (index #18).

66 Remove the retaining fasteners from the number 2 pivot pin (index #8) at the steer end of the machine.

67 Use a soft metal drift to remove the number 2 pivot pin (index #8). Remove the number 2 inner arm (index #18) from the machine.

⚠ CAUTION Bodily injury hazard. The number 2 inner arm may become unbalanced and fall if not properly supported when removed from the machine.

68 Remove the safety arm from the number 2 inner arm (index #18) that was just removed.

69 Attach a lifting strap from an overhead crane to the number 1 inner arm (index #10).

https://truckmanualshub.com/

70 Raise the number 1 inner arm (index #10) approximately 2 feet / 60 cm and install the safety arm between the number 1 inner arm (index #10) and the number 1 outer arm (index #22) at the non-steer end of the machine. Lower the scissor arms onto the safety arm.

⚠ CAUTION Bodily injury hazard. Keep hands clear of moving parts when lowering the scissor arms onto the safety arm.

71 Attach a lifting strap from an overhead crane to the lug on the rod end of the lift cylinder (index #5). Raise the lift cylinder approximately 3 ft / 1 m.

72 Tag, disconnect and plug the hydraulic hoses on the lift cylinder. Cap the fittings on the cylinder.

⚠ WARNING Bodily injury hazard. Spraying hydraulic oil can penetrate and burn skin. Loosen hydraulic connections very slowly to allow the oil pressure to dissipate gradually. Do not allow oil to squirt or spray.

73 Tag and disconnect the wires and manual lowering cable from the solenoid valve on the cylinder.

74 **Models with platform overload option:** Tag and disconnect the wire harness from the platform overload pressure transducer.

Note: After replacing the scissor assembly, the platform overload system must be calibrated. Refer to Repair Procedure, *How to Calibrate the Platform Overload System (if equipped).*

75 Raise the lift cylinder to a vertical position.

76 Remove the pin retaining fasteners from the lift cylinder barrel-end pin (index #21). Use a soft metal drift to remove the pin. Remove the lift cylinder from the machine.

⚠ CAUTION Crushing hazard. The lift cylinder will become unbalanced and fall if not properly supported and secured to the lifting device.

NOTICE Component damage hazard. Be careful not to damage the valve or fittings on the cylinder while removing it from the machine.

77 Place a 4 x 4 x 48 inch / 10 cm x 10 cm x 1.2 m long block across both sides of the chassis under the number 1 center pivot pin (index #11).

78 Attach a lifting strap from an overhead crane to the number 1 inner arm (index #10) at the non-steer end. Raise the number 1 inner arm and remove the safety arm. Lower the number 1 inner arm (index #10) onto the block that was placed across the chassis.

⚠ CAUTION Bodily injury hazard. Keep hands clear of moving parts when lowering the scissor arms.

79 Remove the cables from the number 1 cable bridge and lay them off to the side.

NOTICE Component damage hazard. Cables can be damaged if they are kinked or pinched.

80 Support and secure the entry ladder to an appropriate lifting device.

https://truckmanualshub.com/

Scissor Components

81 Remove the fasteners from the entry ladder and remove the entry ladder from the machine.

⚠ CAUTION Crushing hazard. The entry ladder will fall if not properly supported and secured to the lifting device.

82 Attach a lifting strap from an overhead crane to the number 1 outer arm (index #22). Do not apply any lifting pressure.

83 Remove the external snap rings and retaining fasteners from the number 1 center pivot pins (index #11).

84 Remove the number 1 cable bridge from the machine.

85 Use a soft metal drift to remove the number 1 center pivot pins (index #9).

⚠ CAUTION Bodily injury hazard. The number 1 outer arm may become unbalanced and fall if not properly supported when the pin is removed.

86 Slide the number 1 outer arm (index #22) to the non-steer end and remove it from the machine.

⚠ CAUTION Bodily injury hazard. The number 1 outer arm may become unbalanced and fall if not properly supported when removed from the machine.

87 Attach the strap from an overhead crane to the number 1 inner arm (index #10). Do not lift it.

88 Remove the upper fasteners securing the number 1 inner arm pivot bracket to the end of the chassis. Loosen the lower fasteners.

89 Remove the number 1 inner arm (index #10) from the machine.

⚠ CAUTION Bodily injury hazard. The number 1 inner arm may become unbalanced and fall if not properly supported when removed from the machine.

NOTICE Component damage hazard. Be sure not to damage the limit switch or level sensor components when the number 1 inner arm is removed from the machine.

https://truckmanualshub.com/

Scissor Components

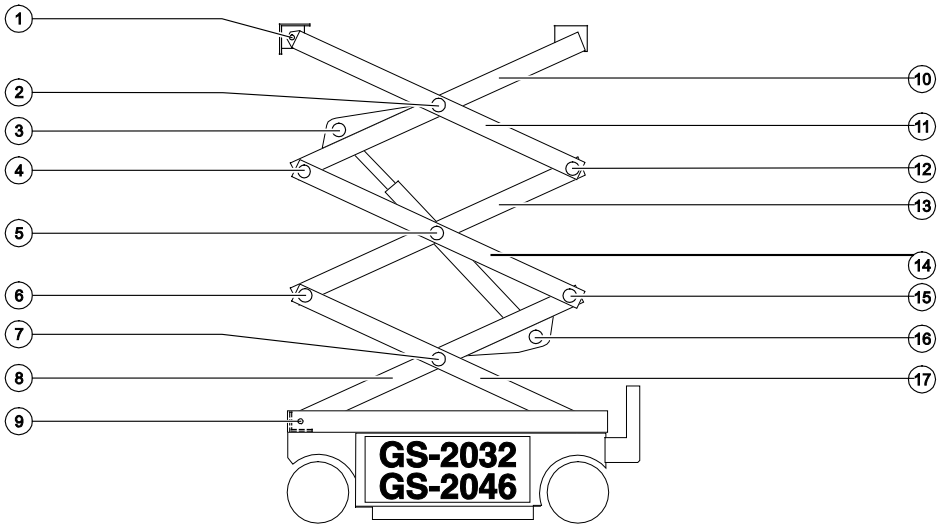

Steer End	Non-steer End
1 - Number 4 pivot pin	10 - Number 3 inner arm
2 - Number 3 center pivot pin (Qty. 2)	11 - Number 3 outer arm
3 - Lift cylinder rod-end pivot pin	12 - Number 3 pivot pin (non-steer end)
4 - Number 3 pivot pin (steer end)	13 - Number 2 inner arm
5 - Number 2 center pivot pin (Qty. 2)	14 - Number 2 outer arm
6 - Number 2 pivot pin (steer end)	15 - Number 2 pivot pin (non-steer end)
7 - Number 1 center pivot pin (Qty. 2)	16 - Lift cylinder barrel-end pivot pin
8 - Number 1 inner arm	17 - Number 1 outer arm
9 - Number 1 pivot pin	

https://truckmanualshub.com/

9-3 Scissor Assembly, GS-2032 and GS-2046

How to Disassemble the Scissor Assembly, GS-2032 and GS-2046

WARNING Bodily injury hazard. The procedures in this section require specific repair skills, lifting equipment and a suitable workshop. Attempting this procedure without these skills and tools could result in death or serious injury and significant component damage. Dealer service is required.

Note: When removing a hose assembly or fitting, the O-ring (if equipped) on the fitting and/or hose end must be replaced. All connections must be torqued to specification during installation. Refer to Specifications, *Hydraulic Hose and Fitting Torque Specifications.*

Note: Machines equipped with a Platform Height Sensor, begin the Scissor Disassembly procedure at step 1. Machines without a Platform Height Sensor, begin the Scissor Disassembly procedure at step 24.

1 Turn the key switch to ground controls and pull out the red Emergency Stop button to the on position at both ground and platform controls.

2 Raise the platform 7 to 8 feet / 2.1 to 2.4 m.

3 Lift the safety arm, move it to the center of the scissor arm and rotate down to a vertical position.

4 Lower the platform onto the safety arm.

WARNING Crushing hazard. Keep hands clear of the safety arm when lowering the platform.

5 At the ground controls, turn the key switch to the off position and push in the red Emergency Stop button to the off position.

6 Disconnect the battery pack from the machine.

WARNING Electrocution/burn hazard. Contact with electrically charged circuits could result in death or serious injury. Remove all rings, watches and other jewelry.

7 Remove the fasteners securing the large platform height sensor cover to the large platform height sensor bracket.

8 Remove the platform height sensor cover.

9 Tag and disconnect the platform height sensor from the platform height sensor harness.

10 Remove the fastener securing the platform height sensor assembly to the number 1 inner arm.

11 Remove the platform height sensor assembly from the number 1 pivot pin.

12 Remove the plastic nut securing the squeeze connector to the large platform height sensor bracket.

13 Remove the squeeze connector from the large platform height sensor bracket.

14 Remove the fasteners securing the large platform height sensor bracket to the number 1 inner arm pivot bracket.

15 Remove the large platform height sensor bracket from the number 1 inner arm pivot bracket.

https://truckmanualshub.com/

Scissor Components

16 Install the fasteners removed in 14 to the number 1 inner arm pivot bracket and chassis.

DANGER Tip-over hazard. Failure to install the fasteners securing the number 1 inner arm pivot bracket to the chassis, could result in the machine tipping over, causing death or serious injury.

17 Connect the battery pack to the machine.

18 Turn the key switch to ground controls.

19 Press and hold the ground control scroll up and scroll down buttons.

20 Pull out the red Emergency Stop button to the on position at the ground controls.

21 Using the ground control menu buttons, navigate to Service Override Mode. Select Service Override Mode.

Note: The machine must be in Service Override Mode to raise the platform. While in Service Override Mode, only the GCON will operate with limited functionality. The platform will raise a predetermined amount of time and stop.

22 Raise the platform and rotate the safety arm to the stowed position.

23 Fully lower the platform to the stowed position.

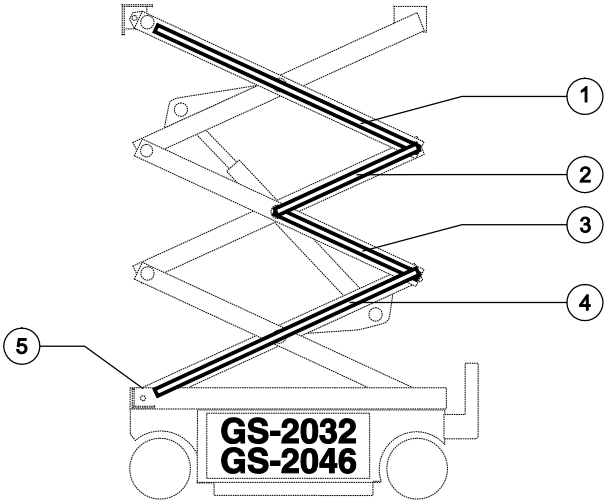

Cable bridge and platform height sensor

1 cable bridge 3
2 cable bridge 2A
3 cable bridge 2B
4 cable bridge 1
5 platform height sensor

24 Remove the platform. Refer to Repair Procedure, *How to Remove the Platform.*

25 Support and secure the entry ladder to an appropriate lifting device.

26 Remove the fasteners from the entry ladder and remove the entry ladder from the machine.

CAUTION Crushing hazard. The entry ladder will fall if not properly supported and secured to the lifting device.

https://truckmanualshub.com/

Scissor Components

27 Remove the cables from the number 3 cable bridge and lay them off to the side.

NOTICE Component damage hazard. Cables can be damaged if they are kinked or pinched.

28 Disconnect the number 3 cable bridge from the number 3 outer arm (index #11) and remove the cable bridge from the machine.

29 Remove the retaining fasteners from the number 4 pivot pin (index #1).

30 Use a soft metal drift to remove the number 4 pivot pin (index #1). Remove the platform mount bracket from the machine.

31 Attach a lifting strap from an overhead crane to the number 3 outer arm at the ground control side (index #11).

32 Remove the retaining fasteners from the number 3 center pivot pin (index #2) at the ground control side.

33 Place a rod through the number 3 center pivot pin at the ground control side (index #2) and twist to remove the pin.

34 Remove the retaining fasteners from the number 3 pivot pin (index #12) at the non-steer end.

35 Use a soft metal drift to remove the number 3 pivot pin (index #12) from the non-steer end of the machine. Remove the number 3 outer arm at the ground control side (index #11) from the machine.

⚠ CAUTION Crushing hazard. The number 3 outer arm at the ground control side (index #11) may become unbalanced and fall if not properly supported when removed from the machine.

36 Attach a lifting strap from an overhead crane to the number 3 outer arm at the battery side (index #11).

37 Remove the retaining fasteners from the number 3 center pivot pin (index #2) at the battery side.

38 Place a rod through the number 3 center pivot pin at the battery side (index #2) and twist to remove the pin.

39 Remove the number 3 outer arm (index #11) from the machine.

⚠ CAUTION Crushing hazard. The number 3 outer arm (index #11) may become unbalanced and fall if not properly supported when removed from the machine.

40 Attach a lifting strap from an overhead crane to the lug of the rod end of the lift cylinder.

41 Remove the retaining fasteners from the lift cylinder rod end pivot pin (index #3).

42 Use a soft metal drift to remove the lift cylinder rod end pivot pin (index #3) from the machine.

⚠ CAUTION Crushing hazard. The lift cylinder will fall if not properly supported when the pivot pin is removed.

43 Place a 4 x 4 x 10 inch / 10 x 10 x 25 cm block onto the number 1 inner arm cylinder plate (index #8).

44 Lower the cylinder onto the block.

⚠ CAUTION Bodily injury hazard. Keep hands clear of moving parts when lowering the cylinder.

45 Attach a lifting strap from an overhead crane to the number 3 inner arm (index #10). Raise the arm to a vertical position.

https://truckmanualshub.com/

46 Remove the retaining fasteners from the number 3 pivot pin at the steer end of the machine (index #4).

47 Use a soft metal drift to remove the number 3 pivot pin (index #4) from the steer end of the machine. Remove the number 3 inner arm (index #10) from the machine.

⚠ CAUTION Crushing hazard. The number 3 inner arm (index #10) may become unbalanced and fall if not properly supported when the pivot pin is removed.

48 Remove the cables from the number 2A and 2B cable bridges and lay them off to the side.

NOTICE Component damage hazard. Cables can be damaged if they are kinked or pinched.

49 Disconnect the number 2A and 2B cable bridges from the scissor linkset and remove both cable bridges from the machine.

50 Attach a lifting strap from an overhead crane to the number 2 outer arm at the ground control side (index #14).

51 Remove the retaining fasteners from the number 2 center pivot pin (index #5) at the ground control side.

52 Place a rod through the number 2 center pivot pin at the ground control side (index #5) and twist to remove the pin.

53 Remove the retaining fasteners from the number 2 pivot pin (index #15) at the non-steer end.

54 Use a soft metal drift to remove the number 2 pivot pin (index #15) from the non-steer end of the machine. Remove the number 2 outer arm at the ground control side (index #14) from the machine.

⚠ CAUTION The number 2 outer arm at the ground control side (index #14) may become unbalanced and fall if not properly supported when the pivot pin is removed.

55 Attach a lifting strap from an overhead crane to the number 2 outer arm at the battery side (index #14).

56 Remove the retaining fasteners from the number 2 center pivot pin (index #5) at the battery side.

57 Place a rod through the number 2 center pivot pin at the battery side (index #5) and twist to remove the pin.

⚠ CAUTION Crushing hazard. The number 2 outer arm (index #14) may become unbalanced and fall if not properly supported when the pivot pin is removed.

58 Remove the number 2 outer arm (index #14) from the machine.

⚠ CAUTION Crushing hazard. The number 2 outer arm (index #14) may become unbalanced and fall if not properly supported when removed from the machine.

59 Attach a lifting strap from an overhead crane to the number 2 inner arm (index #13). Raise the arm to a vertical position.

https://truckmanualshub.com/

Scissor Components

60 Remove the retaining fasteners from the number 2 pivot pin at the steer end of the machine (index #6).

61 Use a soft metal drift to remove the number 2 pivot pin (index #6) from the steer end of the machine. Remove the number 2 inner arm (index #13) from the machine.

⚠ CAUTION Crushing hazard. The number 2 inner arm (index #13) may become unbalanced and fall if not properly supported when the pivot pin is removed.

62 Attach a lifting strap from an overhead crane to the number 1 inner arm (index #8).

63 Raise the number 1 inner arm (index #8) approximately 2 feet / 60 cm.

64 Place a 4 x 4 x 48 inch / 10 cm x 10 cm x 1.2 m long block across both sides of the chassis under the number 1 center pivot pin (index #7).

65 Lower the scissor arms onto the block that was placed across the chassis.

⚠ CAUTION Bodily injury hazard. Keep hands clear of moving parts when lowering the scissor arms.

66 Attach a lifting strap from an overhead crane to the lug of the rod end of the lower lift cylinder.

67 Tag, disconnect and plug the hydraulic hose on the lower lift cylinder. Cap the fittings on the cylinder.

⚠ WARNING Bodily injury hazard. Spraying hydraulic oil can penetrate and burn skin. Loosen hydraulic connections very slowly to allow the oil pressure to dissipate gradually. Do not allow oil to squirt or spray.

68 Tag and disconnect the wire harness from the solenoid valve on the cylinder.

69 Tag and disconnect the wires and manual lowering cable from the solenoid valve on the cylinder.

70 **Models with platform overload option:** Tag and disconnect the wire harness from the platform overload pressure transducer.

Note: After replacing the scissor assembly, the platform overload system must be calibrated. Refer to Repair Procedure, *How to Calibrate the Platform Overload System (if equipped).*

71 Raise the lift cylinder to a vertical position.

72 Remove the pin retaining fasteners from the lift cylinder barrel-end pin (index #16). Use a soft metal drift to remove the pin. Remove the lift cylinder from the machine.

⚠ CAUTION Crushing hazard. The lift cylinder will fall if not properly supported when the pivot pin is removed.

NOTICE Component damage hazard. Be careful not to damage the valve or fittings on the cylinder while removing it from the machine.

https://truckmanualshub.com/

73 Remove the cables from the number 1 cable bridge and lay them off to the side.

NOTICE Component damage hazard. Cables can be damaged if they are kinked or pinched.

74 Disconnect the number 1 cable bridge from the number 1 outer arm (index #17) and remove the cable bridge from the machine.

75 Attach a lifting strap from an overhead crane to the number 1 inner arm (index #8).

76 Raise the arm slightly and remove the block.

77 Lower the arm to the stowed position.

⚠ CAUTION Bodily injury hazard. Keep hands clear of moving parts when lowering the scissor arms.

78 Secure the ends of the scissor arms together at the steer end of the machine with a strap or other suitable device.

79 Secure the ends of the scissor arms together at the non-steer end of the machine with a strap or other suitable device.

80 Remove the retaining fasteners securing the chassis mount bracket to the chassis.

81 Remove the linkset from the machine

⚠ CAUTION Bodily injury hazard. The number 1 inner and outer arms (index #8 and #17) may become unbalanced and fall if not properly supported when removed from the machine.

NOTICE Component damage hazard. Be sure not to damage the limit switch or level sensor components when the number 1 inner and outer arms (index #8 and #17) are removed from the machine.

https://truckmanualshub.com/

Scissor Components

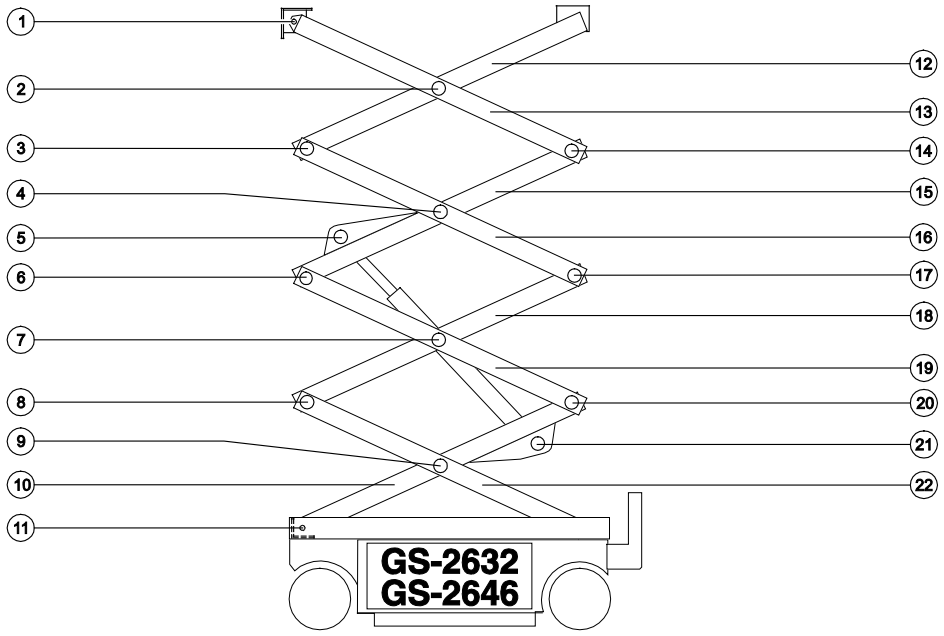

Steer End	Non-steer End
1 - Number 5 pivot pin	12 - Number 4 inner arm
2 - Number 4 center pivot pin (Qty. 2)	13 - Number 4 outer arm
3 - Number 4 pivot pin (steer end)	14 - Number 4 pivot pin (non-steer end)
4 - Number 3 center pivot pin (Qty. 2)	15 - Number 3 inner arm
5 - Lift cylinder rod-end pivot pin	16 - Number 3 outer arm
6 - Number 3 pivot pin (steer end)	17 - Number 3 pivot pin (non-steer end)
7 - Number 2 center pivot pin (Qty. 2)	18 - Number 2 inner arm
8 - Number 2 pivot pin (steer end)	19 - Number 2 outer arm
9 - Number 1 center pivot pin (Qty. 2)	20 - Number 2 pivot pin (non-steer end)
10 - Number 1 inner arm	21 - Lift cylinder barrel-end pivot pin
11 - Number 1 pivot pin	22 - Number 1 outer arm

https://truckmanualshub.com/

9-4 Scissor Assembly, GS-2632 and GS-2646

How to Disassemble the Scissor Assembly

WARNING Bodily injury hazard. The procedures in this section require specific repair skills, lifting equipment and a suitable workshop. Attempting this procedure without these skills and tools could result in death or serious injury and significant component damage. Dealer service is required.

Note: When removing a hose assembly or fitting, the O-ring (if equipped) on the fitting and/or hose end must be replaced. All connections must be torqued to specification during installation. Refer to Specifications, *Hydraulic Hose and Fitting Torque Specifications.*

Note: Machines equipped with a Platform Height Sensor, begin the Scissor Disassembly procedure at step 1. Machines without a Platform Height Sensor, begin the Scissor Disassembly procedure at step 24.

1 Turn the key switch to ground controls and pull out the red Emergency Stop button to the on position at both ground and platform controls.

2 Raise the platform 7 to 8 feet / 2.1 to 2.4 m.

3 Lift the safety arm, move it to the center of the scissor arm and rotate down to a vertical position.

4 Lower the platform onto the safety arm.

WARNING Crushing hazard. Keep hands clear of the safety arm when lowering the platform.

5 At the ground controls, turn the key switch to the off position and push in the red Emergency Stop button to the off position.

6 Disconnect the battery pack from the machine.

WARNING Electrocution/burn hazard. Contact with electrically charged circuits could result in death or serious injury. Remove all rings, watches and other jewelry.

7 Remove the fasteners securing the large platform height sensor cover to the large platform height sensor bracket.

8 Remove the platform height sensor cover.

9 Tag and disconnect the platform height sensor from the platform height sensor harness.

10 Remove the fastener securing the platform height sensor assembly to the number 1 inner arm.

11 Remove the platform height sensor assembly from the number 1 pivot pin.

12 Remove the plastic nut securing the squeeze connector to the large platform height sensor bracket.

13 Remove the squeeze connector from the large platform height sensor bracket.

14 Remove the fasteners securing the large platform height sensor bracket to the number 1 inner arm pivot bracket.

15 Remove the large platform height sensor bracket from the number 1 inner arm pivot bracket.

https://truckmanualshub.com/

Scissor Components

16 Install the fasteners removed in 14 to the number 1 inner arm pivot bracket and chassis.

DANGER Tip-over hazard. Failure to install the fasteners securing the number 1 inner arm pivot bracket to the chassis, could result in the machine tipping over, causing death or serious injury.

17 Connect the battery pack to the machine.

18 Turn the key switch to ground controls.

19 Press and hold the ground control scroll up and scroll down buttons.

20 Pull out the red Emergency Stop button to the on position at the ground controls.

21 Using the ground control menu buttons, navigate to Service Override Mode. Select Service Override Mode.

Note: The machine must be in Service Override Mode to raise the platform. While in Service Override Mode, only the GCON will operate with limited functionality. The platform will raise a predetermined amount of time and stop.

22 Raise the platform and rotate the safety arm to the stowed position.

23 Fully lower the platform to the stowed position.

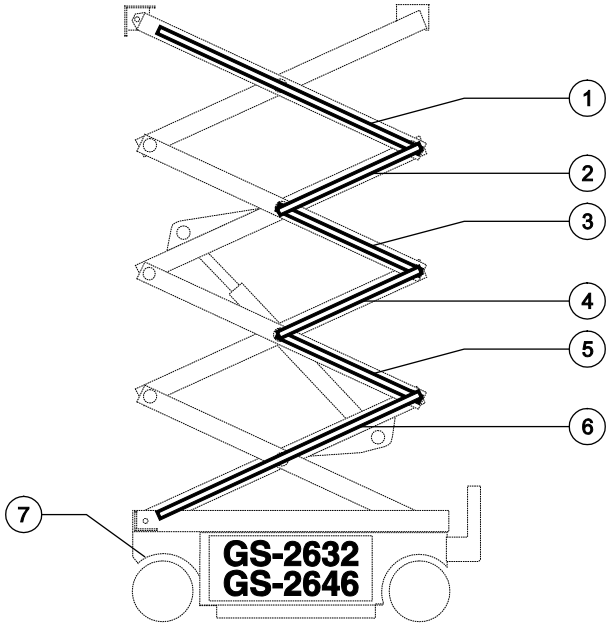

Cable bridge and platform height sensor

1 cable bridge 4
2 cable bridge 3A
3 cable bridge 3B
4 cable bridge 2A
5 cable bridge 2B
6 cable bridge 1
7 platform height sensor

https://truckmanualshub.com/

24 Remove the platform. Refer to Repair Procedure, *How to Remove the Platform.*

25 Support and secure the entry ladder to an appropriate lifting device.

26 Remove the fasteners from the entry ladder and remove the entry ladder from the machine.

⚠ CAUTION Crushing hazard. The entry ladder will fall if not properly supported and secured to the lifting device.

27 Remove the cables from the number 4 cable bridge and lay them off to the side.

NOTICE Component damage hazard. Cables can be damaged if they are kinked or pinched.

28 Disconnect the number 4 cable bridge from the number 4 outer arm (index #13) and remove the cable bridge from the machine.

29 Remove the retaining fasteners from the number 5 pivot pin (index #1).

30 Use a soft metal drift to remove the number 5 pivot pin (index #1). Remove the platform mount bracket from the machine.

31 Attach a lifting strap from an overhead crane to the number 4 outer arm at the ground control side (index #13).

32 Remove the retaining fasteners from the number 4 center pivot pin (index #2) at the ground control side.

33 Place a rod through the number 4 center pivot pin at the ground control side (index #2) and twist to remove the pin.

34 Remove the retaining fasteners from the number 4 pivot pin (index #15) at the non-steer end.

35 Use a soft metal drift to remove the number 4 pivot pin (index #14) from the non-steer end of the machine. Remove the number 4 outer arm at the ground control side (index #13) from the machine.

⚠ CAUTION Crushing hazard. The number 4 outer arm at the ground control side (index #13) may become unbalanced and fall if not properly supported when removed from the machine.

36 Attach a lifting strap from an overhead crane to the number 4 outer arm at the battery side (index #13).

37 Remove the retaining fasteners from the number 4 center pivot pin (index #2) at the battery side.

38 Place a rod through the number 4 center pivot pin at the battery side (index #2) and twist to remove the pin.

39 Remove the number 4 outer arm (index #13) from the machine.

⚠ CAUTION Crushing hazard. The number 4 outer arm (index #13) may become unbalanced and fall if not properly supported when removed from the machine.

40 Attach a lifting strap from an overhead crane to the number 4 inner arm (index #12). Raise the arm to a vertical position.

https://truckmanualshub.com/

Scissor Components

41 Remove the retaining fasteners from the number 4 pivot pin at the steer end of the machine (index #3).

42 Use a soft metal drift to remove the number 4 pivot pin (index #3) from the steer end of the machine. Remove the number 4 inner arm (index #12) from the machine.

⚠ CAUTION Crushing hazard. The number 4 inner arm (index #12) may become unbalanced and fall if not properly supported when removed from the machine.

43 Remove the cables from the number 3A and 3B cable bridge and lay them off to the side.

NOTICE Component damage hazard. Cables can be damaged if they are kinked or pinched.

44 Disconnect the number 3A and 3B cable bridges from the scissor linkset and remove both cable bridges from the machine.

45 Attach a lifting strap from an overhead crane to the number 3 outer arm at the ground control side (index #16).

46 Remove the retaining fasteners from the number 3 center pivot pin (index #4) at the ground control side.

47 Place a rod through the number 3 center pivot pin at the ground control side (index #4) and twist to remove the pin.

48 Remove the retaining fasteners from the number 3 pivot pin (index #17) at the non-steer end.

49 Use a soft metal drift to remove the number 3 pivot pin (index #17) from the non-steer end of the machine. Remove the number 3 outer arm at the ground control side (index #16) from the machine.

⚠ CAUTION Crushing hazard. The number 3 outer arm at the ground control side (index #16) may become unbalanced and fall if not properly supported when removed from the machine.

50 Attach a lifting strap from an overhead crane to the number 3 outer arm at the battery side (index #16).

51 Remove the retaining fasteners from the number 3 center pivot pin (index #4) at the battery side.

52 Place a rod through the number 3 center pivot pin at the battery side (index #4) and twist to remove the pin.

53 Remove the number 3 outer arm (index #16) from the machine.

⚠ CAUTION Crushing hazard. The number 3 outer arm (index #16) may become unbalanced and fall if not properly supported when removed from the machine.

54 Attach a lifting strap from an overhead crane to the lug of the rod end of the lift cylinder.

55 Remove the retaining fasteners from the lift cylinder rod end pivot pin (index #5).

https://truckmanualshub.com/

56 Use a soft metal drift to remove the lift cylinder rod end pivot pin (index #5) from the machine.

⚠ CAUTION Crushing hazard. The lift cylinder will fall if not properly supported when the pivot pin is removed.

57 Place a 4 x 4 x 10 inch / 10 x 10 x 25 cm block onto the number 1 inner arm cylinder plate (index #10).

58 Lower the cylinder onto the block.

⚠ CAUTION Bodily injury hazard. Keep hands clear of moving parts when lowering the cylinder.

59 Attach a lifting strap from an overhead crane to the number 3 inner arm (index #15). Raise the arm to a vertical position.

60 Remove the retaining fasteners from the number 3 pivot pin at the steer end of the machine (index #6).

61 61 Use a soft metal drift to remove the number 3 pivot pin (index #6) from the steer end of the machine. Remove the number 3 inner arm (index #15) from the machine.

⚠ CAUTION Crushing hazard. The number 3 inner arm (index #15) may become unbalanced and fall if not properly supported when the pivot pin is removed.

62 Remove the cables from the number 2A and 2B cable bridge and lay them off to the side.

NOTICE Component damage hazard. Cables can be damaged if they are kinked or pinched.

63 Disconnect the number 2A and 2B cable bridges from the scissor linkset and remove both cable bridges from the machine.

64 Attach a lifting strap from an overhead crane to the number 2 outer arm at the ground control side (index #19).

65 Remove the retaining fasteners from the number 2 center pivot pin (index #7) at the ground control side.

66 Place a rod through the number 2 center pivot pin at the ground control side (index #7) and twist to remove the pin.

67 Remove the retaining fasteners from the number 2 pivot pin (index #20) at the non-steer end.

68 Use a soft metal drift to remove the number 2 pivot pin (index #20) from the non-steer end of the machine. Remove the number 2 outer arm at the ground control side (index #19) from the machine.

⚠ CAUTION The number 2 outer arm at the ground control side (index #19) may become unbalanced and fall if not properly supported when the pivot pin is removed.

69 Attach a lifting strap from an overhead crane to the number 2 outer arm at the battery side (index #19).

70 Remove the retaining fasteners from the number 2 center pivot pin (index #7) at the battery side.

https://truckmanualshub.com/

Scissor Components

71 Place a rod through the number 2 center pivot pin at the battery side (index #7) and twist to remove the pin.

⚠ CAUTION Crushing hazard. The number 2 outer arm (index #19) may become unbalanced and fall if not properly supported when the pivot pin is removed.

72 Remove the number 2 outer arm (index #19) from the machine.

⚠ CAUTION Crushing hazard. The number 2 outer arm (index #19) may become unbalanced and fall if not properly supported when removed from the machine.

73 Attach a lifting strap from an overhead crane to the number 2 inner arm (index #18). Raise the arm to a vertical position.

74 Remove the retaining fasteners from the number 2 pivot pin at the steer end of the machine (index #8).

75 Use a soft metal drift to remove the number 2 pivot pin (index #8) from the steer end of the machine. Remove the number 2 inner arm (index #18) from the machine.

⚠ CAUTION Crushing hazard. The number 2 inner arm (index #18) may become unbalanced and fall if not properly supported when the pivot pin is removed.

76 Attach a lifting strap from an overhead crane to the number 1 inner arm (index #10).

77 Raise the number 1 inner arm (index #10) approximately 2 feet / 60 cm.

78 Place a 4 x 4 x 48 inch / 10 cm x 10 cm x 1.2 m long block across both sides of the chassis under the number 1 center pivot pin (index #9).

79 Lower the scissor arms onto the block that was placed across the chassis.

⚠ CAUTION Bodily injury hazard. Keep hands clear of moving parts when lowering the scissor arms.

80 Attach a lifting strap from an overhead crane to the lug of the rod end of the lower lift cylinder.

81 Tag, disconnect and plug the hydraulic hose on the lower lift cylinder. Cap the fittings on the cylinder.

⚠ WARNING Bodily injury hazard. Spraying hydraulic oil can penetrate and burn skin. Loosen hydraulic connections very slowly to allow the oil pressure to dissipate gradually. Do not allow oil to squirt or spray.

82 Tag and disconnect the wire harness from the solenoid valve on the cylinder.

83 Tag and disconnect the wires and manual lowering cable from the solenoid valve on the cylinder.

84 **Models with platform overload option:** Tag and disconnect the wire harness from the platform overload pressure transducer.

Note: After replacing the scissor assembly, the platform overload system must be calibrated. Refer to Repair Procedure, *How to Calibrate the Platform Overload System (if equipped).*

https://truckmanualshub.com/

85 Raise the lift cylinder to a vertical position.

86 Remove the pin retaining fasteners from the lift cylinder barrel-end pin (index #21). Use a soft metal drift to remove the pin. Remove the lift cylinder from the machine.

CAUTION Crushing hazard. The lift cylinder will fall if not properly supported when the pivot pin is removed.

NOTICE Component damage hazard. Be careful not to damage the valve or fittings on the cylinder while removing it from the machine.

87 Remove the cables from the number 1 cable bridge and lay them off to the side.

NOTICE Component damage hazard. Cables can be damaged if they are kinked or pinched.

88 Disconnect the number 1 cable bridge from the number 1 outer arm (index #22) and remove the cable bridge from the machine.

89 Attach a lifting strap from an overhead crane to the number 1 inner arm (index #10).

90 Raise the arm slightly and remove the block.

91 Lower the arm to the stowed position.

CAUTION Bodily injury hazard. Keep hands clear of moving parts when lowering the scissor arms.

92 Secure the ends of the scissor arms together at the steer end of the machine with a strap or other suitable device.

93 Secure the ends of the scissor arms together at the non-steer end of the machine with a strap or other suitable device.

94 Remove the retaining fasteners securing the chassis mount bracket to the chassis.

95 Remove the linkset from the machine

CAUTION Bodily injury hazard. The number 1 inner and outer arms (index #10 and #22) may become unbalanced and fall if not properly supported when removed from the machine.

NOTICE Component damage hazard. Be sure not to damage the limit switch or level sensor components when the number 1 inner and outer arms (index #10 and #22) are removed from the machine.

https://truckmanualshub.com/

Scissor Components

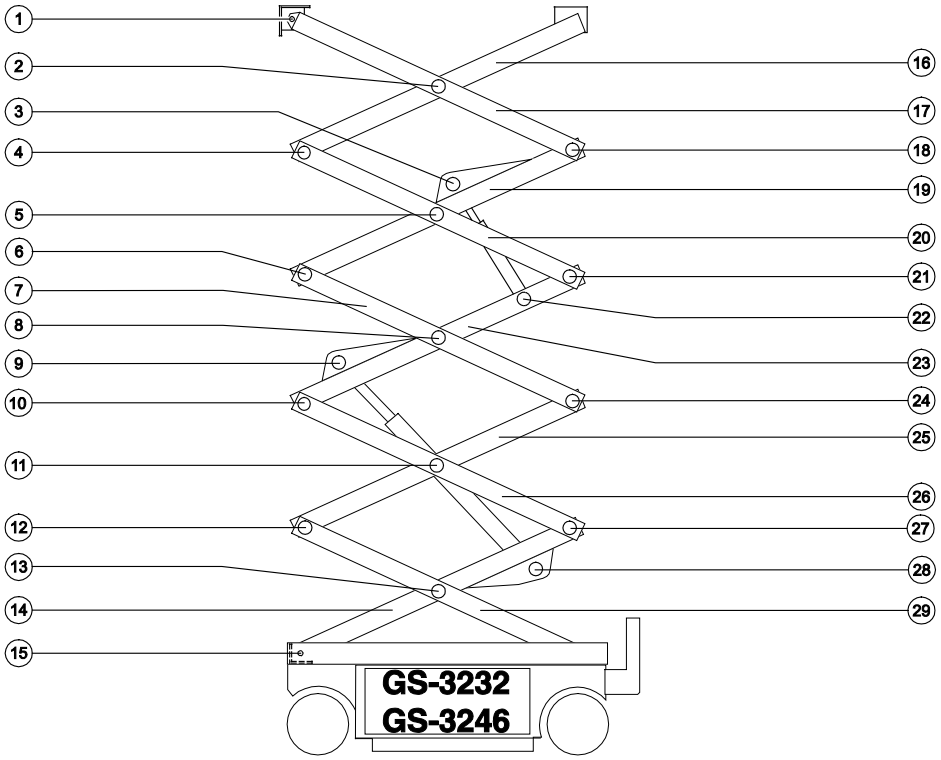

Steer End	Non-steer End
1 - Number 6 pivot pin	16 - Number 5 inner arm
2 - Number 5 center pivot pin (Qty. 2)	17 - Number 5 outer arm
3 - Upper lift cylinder rod-end pivot pin	18 - Number 5 pivot pin (non-steer end)
4 - Number 5 pivot pin (steer end)	19 - Number 4 inner arm
5 - Number 4 center pivot pin (Qty. 2)	20 - Number 4 outer arm
6 - Number 4 pivot pin (steer end)	21 - Number 4 pivot pin (non-steer end)
7 - Number 3 outer arm	22 - Upper lift cylinder barrel-end pivot pin
8 - Number 3 center pivot pin (Qty. 2)	23 - Number 3 inner arm
9 - Lift cylinder rod-end pivot pin	24 - Number 3 pivot pin (non-steer end)
10 - Number 3 pivot pin (steer end)	25 - Number 2 inner arm
11 - Number 2 center pivot pin (Qty. 2)	26 - Number 2 outer arm
12 - Number 2 pivot pin (steer end)	27 - Number 2 pivot pin (non-steer end)
13 - Number 1 center pivot pin (Qty. 2)	28 - Lift cylinder barrel-end pivot pin
14 - Number 1 inner arm	29 - Number 1 outer arm
15 - Number 1 pivot pin (steer end) (Qty. 2)	

https://truckmanualshub.com/

9-5
Scissor Assembly, GS-3232 and GS-3246

How to Disassemble the Scissor Assembly

WARNING Bodily injury hazard. The procedures in this section require specific repair skills, lifting equipment and a suitable workshop. Attempting this procedure without these skills and tools could result in death or serious injury and significant component damage. Dealer service is required.

Note: When removing a hose assembly or fitting, the O-ring (if equipped) on the fitting and/or hose end must be replaced. All connections must be torqued to specification during installation. Refer to Specifications, *Hydraulic Hose and Fitting Torque Specifications.*

Note: Machines equipped with a Platform Height Sensor, begin the Scissor Disassembly procedure at step 1. Machines without a Platform Height Sensor, begin the Scissor Disassembly procedure at step 24.

1 Turn the key switch to ground controls and pull out the red Emergency Stop button to the on position at both ground and platform controls.

2 Raise the platform 7 to 8 feet / 2.1 to 2.4 m.

3 Lift the safety arm, move it to the center of the scissor arm and rotate down to a vertical position.

4 Lower the platform onto the safety arm.

WARNING Crushing hazard. Keep hands clear of the safety arm when lowering the platform.

5 At the ground controls, turn the key switch to the off position and push in the red Emergency Stop button to the off position.

6 Disconnect the battery pack from the machine.

WARNING Electrocution/burn hazard. Contact with electrically charged circuits could result in death or serious injury. Remove all rings, watches and other jewelry.

7 Remove the fasteners securing the large platform height sensor cover to the large platform height sensor bracket.

8 Remove the platform height sensor cover.

9 Tag and disconnect the platform height sensor from the platform height sensor harness.

10 Remove the fastener securing the platform height sensor assembly to the number 1 inner arm.

11 Remove the platform height sensor assembly from the number 1 pivot pin.

12 Remove the plastic nut securing the squeeze connector to the large platform height sensor bracket.

https://truckmanualshub.com/

Scissor Components

13 Remove the squeeze connector from the large platform height sensor bracket.

14 Remove the fasteners securing the large platform height sensor bracket to the number 1 inner arm pivot bracket.

15 Remove the large platform height sensor bracket from the number 1 inner arm pivot bracket.

16 Install the fasteners removed in 14 to the number 1 inner arm pivot bracket and chassis.

DANGER Tip-over hazard. Failure to install the fasteners securing the number 1 inner arm pivot bracket to the chassis, could result in the machine tipping over, causing death or serious injury.

17 Connect the battery pack to the machine.

18 Turn the key switch to ground controls.

19 Press and hold the ground control scroll up and scroll down buttons.

20 Pull out the red Emergency Stop button to the on position at the ground controls.

21 Using the ground control menu buttons, navigate to Service Override Mode. Select Service Override Mode.

Note: The machine must be in Service Override Mode to raise the platform. While in Service Override Mode, only the GCON will operate with limited functionality. The platform will raise a predetermined amount of time and stop.

22 Raise the platform and rotate the safety arm to the stowed position.

23 Fully lower the platform to the stowed position.

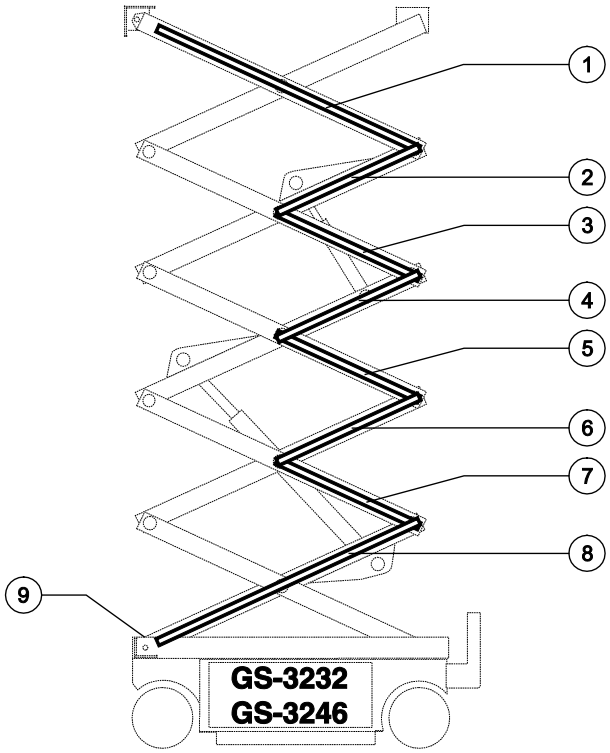

Cable bridge and platform height sensor

1 cable bridge 5
2 cable bridge 4A
3 cable bridge 4B
4 cable bridge 3A
5 cable bridge 3B
6 cable bridge 2A
7 cable bridge 2B
8 cable bridge 1
9 platform height sensor

https://truckmanualshub.com/

24 Remove the platform. Refer to Repair Procedure, *How to Remove the Platform.*

25 Support and secure the entry ladder to an appropriate lifting device.

26 Remove the fasteners from the entry ladder and remove the entry ladder from the machine.

⚠ CAUTION Crushing hazard. The entry ladder will fall if not properly supported and secured to the lifting device.

27 Remove the cables from the number 5 cable bridge and lay them off to the side.

28 Disconnect the number 4 cable bridge from the number 5 outer arm (index #17) and remove the cable bridge from the machine.

29 Remove the retaining fasteners from the number 6 pivot pin (index #1).

30 Use a soft metal drift to remove the number 6 pivot pin (index #1). Remove the platform mount bracket from the machine.

31 Attach a lifting strap from an overhead crane to the number 5 outer arm at the ground control side (index #17).

32 Remove the retaining fasteners from the number 5 center pivot pin (index #2) at the ground control side.

33 Place a rod through the number 5 center pivot pin at the ground control side (index #2) and twist to remove the pin.

34 Remove the retaining fasteners from the number 5 pivot pin (index #18) at the non-steer end.

35 Use a soft metal drift to remove the number 5 pivot pin (index #18) from the non-steer end of the machine. Remove the number 5 outer arm at the ground control side (index #17) from the machine.

⚠ CAUTION Crushing hazard. The number 5 outer arm at the ground control side (index #17) may become unbalanced and fall if not properly supported when removed from the machine.

36 Attach a lifting strap from an overhead crane to the number 5 outer arm at the battery side (index #17).

37 Remove the retaining fasteners from the number 5 center pivot pin (index #2) at the battery side.

38 Place a rod through the number 5 center pivot pin at the battery side (index #2) and twist to remove the pin.

39 Remove the number 5 outer arm (index #17) from the machine.

⚠ CAUTION Crushing hazard. The number 5 outer arm (index #17) may become unbalanced and fall if not properly supported when removed from the machine.

40 Attach a lifting strap from an overhead crane to the number 5 inner arm (index #16). Raise the arm to a vertical position.

41 Remove the retaining fasteners from the number 5 pivot pin at the steer end of the machine (index #4).

https://truckmanualshub.com/

Scissor Components

42 Use a soft metal drift to remove the number 5 pivot pin (index #18) from the steer end of the machine. Remove the number 5 inner arm (index #16) from the machine.

⚠ CAUTION Crushing hazard. The number 5 inner arm (index #16) may become unbalanced and fall if not properly supported when removed from the machine.

43 Tag, disconnect and plug the hydraulic hose on the upper lift cylinder. Cap the fittings on the cylinder.

⚠ WARNING Bodily injury hazard. Spraying hydraulic oil can penetrate and burn skin. Loosen hydraulic connections very slowly to allow the oil pressure to dissipate gradually. Do not allow oil to squirt or spray.

44 Tag and disconnect the wire harness from the solenoid valve on the cylinder.

45 Remove the cables from the number 4A and 4B cable bridges and lay them off to the side.

NOTICE Component damage hazard. Cables can be damaged if they are kinked or pinched.

46 Disconnect the number 4A and 4B cable bridges from the scissor linkset and remove both cable bridges from the machine.

47 Attach a lifting strap from an overhead crane to the lug of the rod end of the upper lift cylinder.

48 Remove the retaining fasteners from the upper lift cylinder rod end pivot pin (index #3).

49 Use a soft metal drift to remove the upper lift cylinder rod end pivot pin (index #3) from the machine.

⚠ CAUTION Crushing hazard. The lift cylinder will fall if not properly supported when the pivot pin is removed.

50 Lower the cylinder onto the linkset.

51 Attach a lifting strap from an overhead crane to the number 4 outer arm at the ground control side (index #20).

52 Remove the retaining fasteners from the number 4 center pivot pin (index #5) at the ground control side.

53 Place a rod through the number 4 center pivot pin at the ground control side (index #5) and twist to remove the pin.

54 Remove the retaining fasteners from the number 4 pivot pin (index #21) at the non-steer end.

55 Use a soft metal drift to remove the number 4 pivot pin (index #21) from the non-steer end of the machine. Remove the number 4 outer arm at the ground control side (index #20) from the machine.

⚠ CAUTION Crushing hazard. The number 4 outer arm at the ground control side (index #20) may become unbalanced and fall if not properly supported when removed from the machine.

56 Attach a lifting strap from an overhead crane to the number 4 outer arm at the battery side (index #20).

57 Remove the retaining fasteners from the number 4 center pivot pin (index #5) at the battery side.

https://truckmanualshub.com/

58 Place a rod through the number 4 center pivot pin at the battery side (index #5) and twist to remove the pin.

59 Remove the number 4 outer arm (index #20) from the machine.

⚠ CAUTION Crushing hazard. The number 4 outer arm (index #20) may become unbalanced and fall if not properly supported when removed from the machine.

60 Attach a lifting strap from an overhead crane to the number 4 inner arm (index #19). Raise the arm to a vertical position.

61 Remove the retaining fasteners from the number 4 pivot pin at the steer end of the machine (index #6).

62 Use a soft metal drift to remove the number 4 pivot pin (index #6) from the steer end of the machine. Remove the number 4 inner arm (index #19) from the machine.

⚠ CAUTION Crushing hazard. The number 4 inner arm (index #19) may become unbalanced and fall if not properly supported when removed from the machine.

63 Remove the cables from the number 3A and 3B cable bridges and lay them off to the side.

NOTICE Component damage hazard. Cables can be damaged if they are kinked or pinched.

64 Disconnect the number 3A and 3B cable bridges from the scissor linkset and remove both cable bridges from the machine.

65 Attach a lifting strap from an overhead crane to the number 3 outer arm at the ground control side (index #7).

66 Remove the retaining fasteners from the number 3 center pivot pin (index #8) at the ground control side.

67 Place a rod through the number 3 center pivot pin at the ground control side (index #8) and twist to remove the pin.

68 Remove the retaining fasteners from the number 3 pivot pin (index #24) at the non-steer end.

69 Use a soft metal drift to remove the number 3 pivot pin (index #24) from the non-steer end of the machine. Remove the number 3 outer arm at the ground control side (index #7) from the machine.

⚠ CAUTION Crushing hazard. The number 3 outer arm at the ground control side (index #7) may become unbalanced and fall if not properly supported when removed from the machine.

70 Attach a lifting strap from an overhead crane to the number 3 outer arm at the battery side (index #7).

71 Remove the retaining fasteners from the number 3 center pivot pin (index #8) at the battery side.

72 Place a rod through the number 3 center pivot pin at the battery side (index #8) and twist to remove the pin.

73 Remove the number 3 outer arm (index #7) from the machine.

⚠ CAUTION Crushing hazard. The number 3 outer arm (index #7) may become unbalanced and fall if not properly supported when removed from the machine.

https://truckmanualshub.com/

Scissor Components

74 Attach a lifting strap from an overhead crane to the lug of the rod end of the upper lift cylinder.

75 Raise the lift cylinder to a vertical position.

76 Remove the pin retaining fasteners from the lift cylinder barrel-end pivot pin (index #22). Remove the lift cylinder from the machine.

CAUTION Crushing hazard. The lift cylinder will fall if not properly supported when the pivot pin is removed.

NOTICE Component damage hazard. Be careful not to damage the valve or fittings on the cylinder while removing it from the machine.

77 Attach a lifting strap from an overhead crane to the lug of the rod end of the lower lift cylinder.

78 Remove the retaining fasteners from the lower lift cylinder rod end pivot pin (index #9).

79 Use a soft metal drift to remove the lower lift cylinder rod end pivot pin (index #9) from the machine.

CAUTION Crushing hazard. The lift cylinder will fall if not properly supported when the pivot pin is removed.

80 Place a 4 x 4 x 10 inch / 10 x 10 x 25 cm block onto the number 1 inner arm cylinder plate (index #14).

81 Lower the cylinder onto the block.

CAUTION Bodily injury hazard. Keep hands clear of moving parts when lowering the cylinder.

82 Attach a lifting strap from an overhead crane to the number 3 inner arm (index #23). Raise the arm to a vertical position.

83 Remove the retaining fasteners from the number 3 pivot pin at the steer end of the machine (index #10).

84 Use a soft metal drift to remove the number 3 pivot pin (index #10) from the steer end of the machine. Remove the number 3 inner arm (index #23) from the machine.

CAUTION Crushing hazard. The number 3 inner arm (index #23) may become unbalanced and fall if not properly supported when the pivot pin is removed.

85 Remove the cables from the number 2A and 2B cable bridges and lay them off to the side.

NOTICE Component damage hazard. Cables can be damaged if they are kinked or pinched.

86 Disconnect the number 2A and 2B cable bridges from the scissor linkset and remove both cable bridges from the machine.

87 Attach a lifting strap from an overhead crane to the number 2 outer arm at the ground control side (index #26).

88 Remove the retaining fasteners from the number 2 center pivot pin (index #11) at the ground control side.

89 Place a rod through the number 2 center pivot pin at the ground control side (index #11) and twist to remove the pin.

90 Remove the retaining fasteners from the number 2 pivot pin (index #27) at the non-steer end.

https://truckmanualshub.com/

91 Use a soft metal drift to remove the number 2 pivot pin (index #27) from the non-steer end of the machine. Remove the number 2 outer arm at the ground control side (index #26) from the machine.

⚠ CAUTION The number 2 outer arm at the ground control side (index #26) may become unbalanced and fall if not properly supported when the pivot pin is removed.

92 Attach a lifting strap from an overhead crane to the number 2 outer arm at the battery side (index #26).

93 Remove the retaining fasteners from the number 2 center pivot pin (index #11) at the battery side.

94 Place a rod through the number 2 center pivot pin at the battery side (index #11) and twist to remove the pin.

⚠ CAUTION Crushing hazard. The number 2 outer arm (index #26) may become unbalanced and fall if not properly supported when the pivot pin is removed.

95 Remove the number 2 outer arm (index #26) from the machine.

⚠ CAUTION Crushing hazard. The number 2 outer arm (index #26) may become unbalanced and fall if not properly supported when removed from the machine.

96 Attach a lifting strap from an overhead crane to the number 2 inner arm (index #25). Raise the arm to a vertical position.

97 Remove the retaining fasteners from the number 2 pivot pin at the steer end of the machine (index #12).

98 Use a soft metal drift to remove the number 2 pivot pin (index #12) from the steer end of the machine. Remove the number 2 inner arm (index #25) from the machine.

⚠ CAUTION Crushing hazard. The number 2 inner arm (index #25) may become unbalanced and fall if not properly supported when the pivot pin is removed.

99 Attach a lifting strap from an overhead crane to the number 1 inner arm (index #14).

100 Raise the number 1 inner arm (index #14) approximately 2 feet / 60 cm.

101 Place a 4 x 4 x 48 inch / 10 cm x 10 cm x 1.2 m long block across both sides of the chassis under the number 1 center pivot pin (index #13).

102 Lower the scissor arms onto the block that was placed across the chassis.

⚠ CAUTION Bodily injury hazard. Keep hands clear of moving parts when lowering the scissor arms.

103 Attach a lifting strap from an overhead crane to the lug of the rod end of the lower lift cylinder.

104 Tag, disconnect and plug the hydraulic hose on the lower lift cylinder. Cap the fittings on the cylinder.

⚠ WARNING Bodily injury hazard. Spraying hydraulic oil can penetrate and burn skin. Loosen hydraulic connections very slowly to allow the oil pressure to dissipate gradually. Do not allow oil to squirt or spray.

https://truckmanualshub.com/

Scissor Components

105 Tag and disconnect the wire harness from the solenoid valve on the cylinder.

106 **Models with platform overload option:** Tag and disconnect the wire harness from the platform overload pressure transducer.

Note: After replacing the scissor assembly, the platform overload system must be calibrated. Refer to Repair Procedure, *How to Calibrate the Platform Overload System (if equipped).*

107 Raise the lift cylinder to a vertical position.

108 Remove the pin retaining fasteners from the lift cylinder barrel-end pin (index #28). Use a soft metal drift to remove the pin. Remove the lift cylinder from the machine.

⚠ CAUTION Crushing hazard. The lift cylinder will fall if not properly supported when the pivot pin is removed.

NOTICE Component damage hazard. Be careful not to damage the valve or fittings on the cylinder while removing it from the machine.

109 Remove the cables from the number 1 cable bridge and lay them off to the side.

NOTICE Component damage hazard. Cables can be damaged if they are kinked or pinched.

110 Disconnect the number 1 cable bridge from the number 1 outer arm (index #29) and remove the cable bridge from the machine.

111 Attach a lifting strap from an overhead crane to the number 1 inner arm (index #14).

112 Raise the arm slightly and remove the block.

113 Lower the arm to the stowed position.

⚠ CAUTION Bodily injury hazard. Keep hands clear of moving parts when lowering the scissor arms.

114 Secure the ends of the scissor arms together at the steer end of the machine with a strap or other suitable device.

115 Secure the ends of the scissor arms together at the non-steer end of the machine with a strap or other suitable device.

116 Remove the retaining fasteners securing the chassis mount bracket to the chassis.

117 Remove the linkset from the machine.

⚠ CAUTION Bodily injury hazard. The number 1 inner and outer arms (index #14 and #29) may become unbalanced and fall if not properly supported when removed from the machine.

NOTICE Component damage hazard. Be sure not to damage the limit switch or level sensor components when the number 1 inner and outer arms (index #14 and #29) are removed from the machine.

https://truckmanualshub.com/

Scissor Components

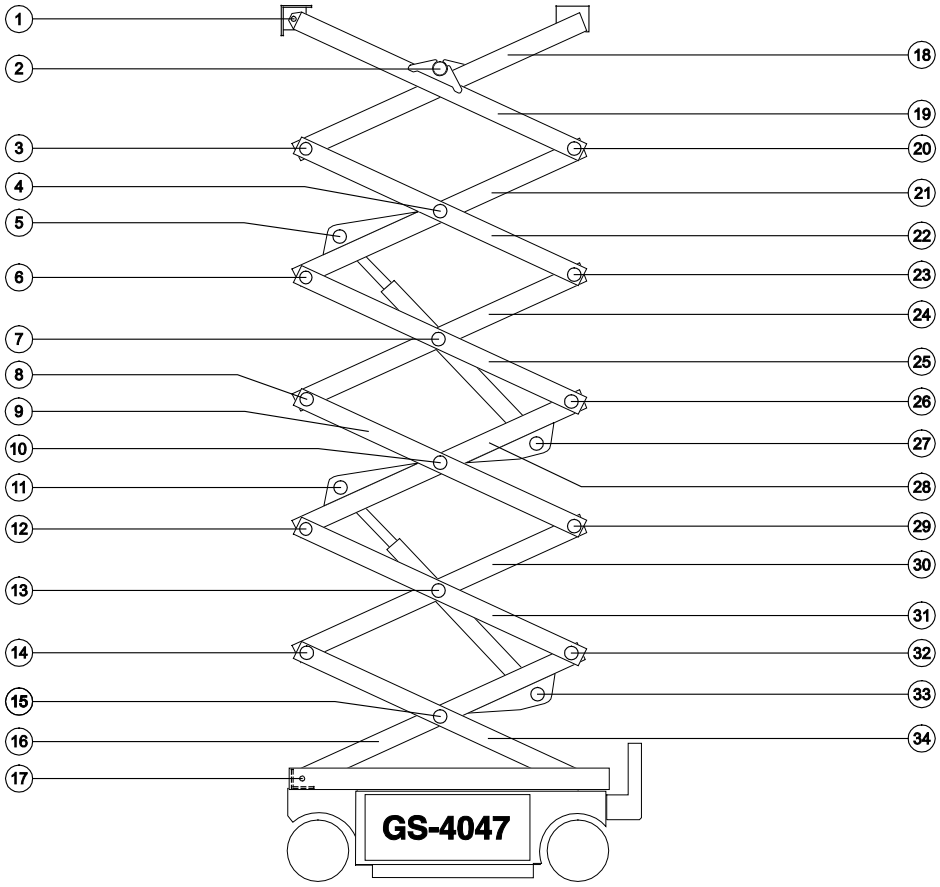

Steer End		Non-steer End
1 - Number 7 pivot pin	13 - Number 2 center pivot pin (Qty. 2)	25 - Number 4 outer arm
2 - Number 6 center pivot pin (Qty. 2)	14 - Number 2 pivot pin (steer end)	26 - Number 4 pivot pin (non-steer end)
3 - Number 6 pivot pin (steer end)	15 - Number 1 center pivot pin (Qty. 2)	27 - Upper lift cylinder barrel-end pivot pin
4 - Number 5 center pivot pin	16 - Number 1 inner arm	28 - Number 3 inner arm
5 - Upper lift cylinder rod-end pivot pin	17 - Number 1 pivot pin (steer end) (Qty. 2)	29 - Number 3 pivot pin (non-steer end)
6 - Number 5 pivot pin (steer end)	18 - Number 6 inner arm	30 - Number 2 inner arm
7 - Number 4 center pivot pin (Qty. 2)	19 - Number 6 outer arm	31 - Number 2 inner arm
8 - Number 4 pivot pin (steer end)	20 - Number 6 pivot pin (non-steer end)	32 - Number 2 pivot pin (non-steer end)
9 - Number 3 outer arm	21 - Number 5 inner arm	33 - Lower lift cylinder barrel-end pivot pin
10 - Number 3 center pivot pin (Qty. 2)	22 - Number 5 outer arm	34 - Number 1 outer arm
11 - Lower lift cylinder rod-end pivot pin	23 - Number 5 pivot pin (non-steer end)	
12 - Number 3 pivot pin (steer end)	24 - Number 4 inner arm	

https://truckmanualshub.com/

Scissor Components

9-6 Scissor Assembly, GS-4047

How to Disassemble the Scissor Assembly

WARNING Bodily injury hazard. This procedure requires specific repair skills, lifting equipment and a suitable workshop. Attempting this procedure without these skills and tools could result in death or serious injury and significant component damage. Dealer service is strongly recommended.

Note: When removing a hose assembly or fitting, the O-ring (if equipped) on the fitting and/or hose end must be replaced. All connections must be torqued to specification during installation. Refer to Specifications, *Hydraulic Hose and Fitting Torque Specifications.*

Note: Machines equipped with a Platform Height Sensor, begin the Scissor Disassembly procedure at step 1. Machines without a Platform Height Sensor, begin the Scissor Disassembly procedure at step 24.

1 Turn the key switch to ground controls and pull out the red Emergency Stop button to the on position at both ground and platform controls.

2 Raise the platform 7 to 8 feet / 2.1 to 2.4 m.

3 Lift the safety arm, move it to the center of the scissor arm and rotate down to a vertical position.

4 Lower the platform onto the safety arm.

WARNING Crushing hazard. Keep hands clear of the safety arm when lowering the platform.

5 At the ground controls, turn the key switch to the off position and push in the red Emergency Stop button to the off position.

6 Disconnect the battery pack from the machine.

WARNING Electrocution/burn hazard. Contact with electrically charged circuits could result in death or serious injury. Remove all rings, watches and other jewelry.

7 Remove the fasteners securing the large platform height sensor cover to the large platform height sensor bracket.

8 Remove the platform height sensor cover.

9 Tag and disconnect the platform height sensor from the platform height sensor harness.

10 Remove the fastener securing the platform height sensor assembly to the number 1 inner arm.

11 Remove the platform height sensor assembly from the number 1 pivot pin.

12 Remove the plastic nut securing the squeeze connector to the large platform height sensor bracket.

https://truckmanualshub.com/

Scissor Components

13 Remove the squeeze connector from the large platform height sensor bracket.

14 Remove the fasteners securing the large platform height sensor bracket to the number 1 inner arm pivot bracket.

15 Remove the large platform height sensor bracket from the number 1 inner arm pivot bracket.

16 Install the fasteners removed in 14 to the number 1 inner arm pivot bracket and chassis.

DANGER Tip-over hazard. Failure to install the fasteners securing the number 1 inner arm pivot bracket to the chassis, could result in the machine tipping over, causing death or serious injury.

17 Connect the battery pack to the machine.

18 Turn the key switch to ground controls.

19 Press and hold the ground control scroll up and scroll down buttons.

20 Pull out the red Emergency Stop button to the on position at the ground controls.

21 Using the ground control menu buttons, navigate to Service Override Mode. Select Service Override Mode.

Note: The machine must be in Service Override Mode to raise the platform. While in Service Override Mode, only the GCON will operate with limited functionality. The platform will raise a predetermined amount of time and stop.

22 Raise the platform and rotate the safety arm to the stowed position.

23 Fully lower the platform to the stowed position.

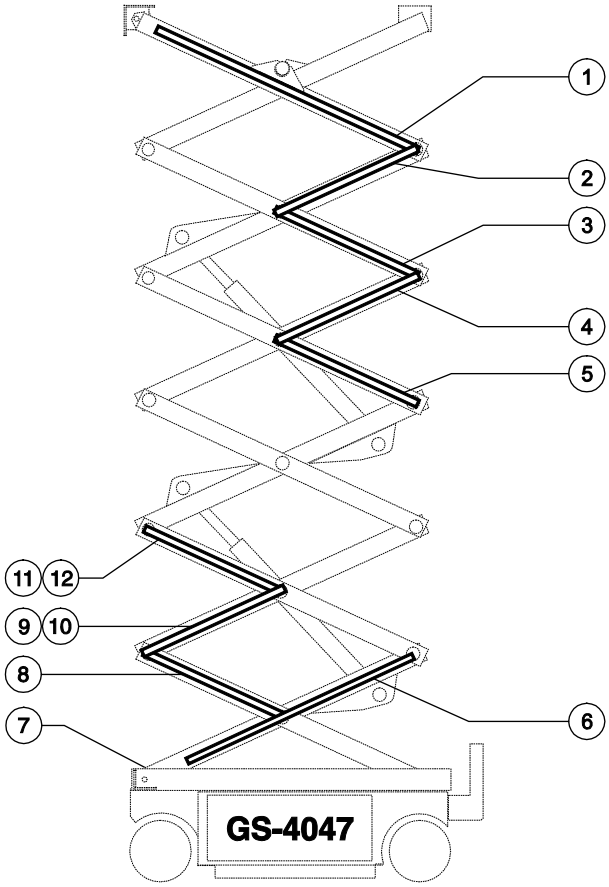

Cable bridge and platform height sensor

1 cable bridge 6
2 cable bridge 5B
3 cable bridge 5A
4 cable bridge 4B
5 cable bridge 4A
6 cable bridge 1A
7 platform height sensor
8 cable bridge 1B
9 cable bridge 2A
10 cable bridge 2B
11 cable bridge 2C
12 cable bridge 2D

https://truckmanualshub.com/

Scissor Components

24 Remove the platform. Refer to Repair Procedure, *How to Remove the Platform.*

25 Remove the cables from cable bridges a, b, c, d and e.

26 Remove the retaining fasteners from the number 7 pivot pin (index #1).

27 Use a soft metal drift to remove the number 7 pivot pin (index #1). Remove the platform mount bracket from the machine.

28 Attach a lifting strap from an overhead crane to the number 6 outer arm at the ground control side (index #19).

29 Remove the retaining fasteners from the number 6 center pivot pin (index #2) at the ground control side.

30 Place a rod through the number 6 center pivot pin at the ground control side (index #2) and twist to remove the pin.

31 Remove the retaining fasteners from the number 6 pivot pin (index #20) at the non-steer end.

32 Use a soft metal drift to remove the number 6 pivot pin (index #20) from the non-steer end of the machine. Remove the number 6 outer arm at the ground control side (index #19) from the machine.

⚠ CAUTION Crushing hazard. The number 6 outer arm at the ground control side (index #19) may become unbalanced and fall if not properly supported when removed from the machine.

33 Attach a lifting strap from an overhead crane to the number 6 outer arm at the battery side (index #19).

34 Remove the retaining fasteners from the number 6 center pivot pin (index #2) at the battery side.

35 Place a rod through the number 6 center pivot pin at the battery side (index #2) and twist to remove the pin.

36 Remove the number 6 outer arm (index #19) from the machine.

⚠ CAUTION Crushing hazard. The number 6 outer arm (index #19) may become unbalanced and fall if not properly supported when removed from the machine.

37 Attach a lifting strap from an overhead crane to the number 6 inner arm (index #18). Raise the arm to a vertical position.

38 Remove the retaining fasteners from the number 6 pivot pin at the steer end of the machine (index #3).

39 Use a soft metal drift to remove the number 6 pivot pin (index #3) from the steer end of the machine. Remove the number 6 inner arm (index #18) from the machine.

⚠ CAUTION Crushing hazard. The number 5 inner arm (index #16) may become unbalanced and fall if not properly supported when removed from the machine.

40 Tag, disconnect and plug the hydraulic hose on the upper lift cylinder. Cap the fittings on the cylinder.

⚠ WARNING Bodily injury hazard. Spraying hydraulic oil can penetrate and burn skin. Loosen hydraulic connections very slowly to allow the oil pressure to dissipate gradually. Do not allow oil to squirt or spray.

41 Attach a lifting strap from an overhead crane to the number 5 outer arm at the ground control side (index #22).

https://truckmanualshub.com/

42 Remove the retaining fasteners from the number 5 center pivot pin (index #4) at the ground control side.

43 Place a rod through the number 5 center pivot pin at the ground control side (index #4) and twist to remove the pin.

44 Remove the retaining fasteners from the number 5 pivot pin (index #23) at the non-steer end.

45 Use a soft metal drift to remove the number 5 pivot pin (index #23) from the non-steer end of the machine. Remove the number 5 outer arm at the ground control side (index #22) from the machine.

⚠ CAUTION Crushing hazard. The number 5 outer arm at the ground control side (index #22) may become unbalanced and fall if not properly supported when removed from the machine.

46 Attach a lifting strap from an overhead crane to the number 5 outer arm at the battery side (index #22).

47 Remove the number 5 outer arm (index #22) from the machine.

⚠ CAUTION Crushing hazard. The number 5 outer arm at the battery side (index #22) may become unbalanced and fall if not properly supported when removed from the machine.

48 Tag and disconnect the wire harness from the solenoid valve on the cylinder.

NOTICE Component damage hazard. Cables can be damaged if they are kinked or pinched.

49 Attach a lifting strap from an overhead crane to the lug of the rod end of the upper lift cylinder.

50 Remove the retaining fasteners from the upper lift cylinder rod end pivot pin (index #5).

51 Use a soft metal drift to remove the upper lift cylinder rod end pivot pin (index #5) from the machine.

⚠ CAUTION Crushing hazard. The lift cylinder will fall if not properly supported when the pivot pin is removed.

52 Lower the cylinder onto the linkset.

53 Attach a lifting strap from an overhead crane to the number 4 outer arm at the ground control side (index #25).

54 Remove the retaining fasteners from the number 4 center pivot pin (index #7) at the ground control side.

55 Place a rod through the number 4 center pivot pin at the ground control side (index #7) and twist to remove the pin.

56 Remove the retaining fasteners from the number 4 pivot pin (index #26) at the non-steer end.

57 Use a soft metal drift to remove the number 4 pivot pin (index #26) from the non-steer end of the machine. Remove the number 4 outer arm at the ground control side (index #25) from the machine.

⚠ CAUTION Crushing hazard. The number 4 outer arm at the ground control side (index #25) may become unbalanced and fall if not properly supported when removed from the machine.

https://truckmanualshub.com/

Scissor Components

58 Attach a lifting strap from an overhead crane to the number 4 outer arm at the battery side (index #25).

59 Remove the retaining fasteners from the number 4 center pivot pin (index #7) at the battery side.

60 Place a rod through the number 4 center pivot pin at the battery side (index #7) and twist to remove the pin.

61 Remove the number 4 outer arm (index #25) from the machine.

⚠ CAUTION Crushing hazard. The number 4 outer arm (index #25) may become unbalanced and fall if not properly supported when removed from the machine.

62 Attach a lifting strap from an overhead crane to the number 4 inner arm (index #24). Raise the arm to a vertical position.

63 Remove the retaining fasteners from the number 4 pivot pin at the steer end of the machine (index #8).

64 Use a soft metal drift to remove the number 4 pivot pin (index #8) from the steer end of the machine. Remove the number 4 inner arm (index #24) from the machine.

⚠ CAUTION Crushing hazard. The number 4 inner arm (index #24) may become unbalanced and fall if not properly supported when removed from the machine.

65 Remove the cables from cable bridges f,h,i,j,k and l.

NOTICE Component damage hazard. Cables can be damaged if they are kinked or pinched.

66 Attach a lifting strap from an overhead crane to the number 3 outer arm at the ground control side (index #9).

67 Remove the retaining fasteners from the number 3 center pivot pin (index #10) at the ground control side.

68 Place a rod through the number 3 center pivot pin at the ground control side (index #10) and twist to remove the pin.

69 Remove the retaining fasteners from the number 3 pivot pin (index #29) at the non-steer end.

70 Use a soft metal drift to remove the number 3 pivot pin (index #29) from the non-steer end of the machine. Remove the number 3 outer arm at the ground control side (index #9) from the machine.

⚠ CAUTION Crushing hazard. The number 3 outer arm at the ground control side (index #9) may become unbalanced and fall if not properly supported when removed from the machine.

71 Attach a lifting strap from an overhead crane to the number 3 outer arm at the battery side (index #9).

72 Remove the number 3 outer arm (index #9) from the machine.

⚠ CAUTION Crushing hazard. The number 3 outer arm (index #9) may become unbalanced and fall if not properly supported when removed from the machine.

73 Attach a lifting strap from an overhead crane to the number 3 inner arm (index #28). Raise the number 3 inner arm and place a 4 x 4 x 48 inch / 10 cm x 10 cm x 1.2 m block across the link stack to gain access to the barrel end pivot pin (index 27).

https://truckmanualshub.com/

74 Attach a lifting strap from an overhead crane to the lug of the rod end of the upper lift cylinder.

75 Raise the lift cylinder to a vertical position.

CAUTION Crushing hazard. The lift cylinder will fall if not properly supported when the pivot pin is removed.

NOTICE Component damage hazard. Be careful not to damage the valve or fittings on the cylinder while removing it from the machine.

76 Use a soft metal drift to remove the upper lift cylinder barrel end pivot pin (index #27) from the machine.

77 Attach a lifting strap from an overhead crane to the number 3 inner arm (index #28). Raise the number 3 inner arm and remove the 4 x 4 x 48 inch / 10 cm x 10 cm x 1.2 m block from the link stack.

78 Lower the number 3 inner arm (index #28) and remove the lifting strap.

79 Attach a lifting strap from an overhead crane to the lug of the rod end of the lower lift cylinder.

80 Remove the retaining fasteners from the lower lift cylinder rod end pivot pin (index 11).

81 Use a soft metal drift to remove the lower lift cylinder rod end pivot pin (index 11) from the machine.

CAUTION Crushing hazard. The lift cylinder will fall if not properly supported when the pivot pin is removed.

82 Place a 4 x 4 x 10 inch / 10 x 10 x 25 cm block onto the number 1 inner arm cylinder plate (index #16).

83 Lower the cylinder onto the block.

CAUTION Bodily injury hazard. Keep hands clear of moving parts when lowering the cylinder.

84 Attach a lifting strap from an overhead crane to the number 3 inner arm (index #28). Raise the arm to a vertical position.

85 Remove the retaining fasteners from the number 3 pivot pin at the steer end of the machine (index #12).

86 Use a soft metal drift to remove the number 3 pivot pin (index #12) from the steer end of the machine. Remove the number 3 inner arm (index #28) from the machine.

CAUTION Crushing hazard. The number 3 inner arm (index #28) may become unbalanced and fall if not properly supported when the pivot pin is removed.

87 Attach a lifting strap from an overhead crane to the number 2 outer arm at the ground control side (index #31).

88 Remove the retaining fasteners from the number 2 center pivot pin (index #13) at the ground control side.

89 Place a rod through the number 2 center pivot pin at the ground control side (index #13) and twist to remove the pin.

90 Remove the retaining fasteners from the number 2 pivot pin (index #32) at the non-steer end.

https://truckmanualshub.com/

Scissor Components

91 Use a soft metal drift to remove the number 2 pivot pin (index #32) from the non-steer end of the machine. Remove the number 2 outer arm at the ground control side (index #31) from the machine.

⚠ CAUTION Crushing hazard. The number 2 outer arm at the ground control side (index #31) may become unbalanced and fall if not properly supported when the pivot pin is removed.

92 Attach a lifting strap from an overhead crane to the number 2 outer arm at the battery side (index #31).

93 Remove the retaining fasteners from the number 2 center pivot pin (index #13) at the battery side.

94 Place a rod through the number 2 center pivot pin at the battery side (index #13) and twist to remove the pin.

⚠ CAUTION Crushing hazard. The number 2 outer arm (index #31) may become unbalanced and fall if not properly supported when the pivot pin is removed.

95 Remove the number 2 outer arm (index #31) from the machine.

⚠ CAUTION Crushing hazard. The number 2 outer arm (index #31) may become unbalanced and fall if not properly supported when removed from the machine.

96 Attach a lifting strap from an overhead crane to the number 2 inner arm (index #30). Raise the arm to a vertical position.

97 Remove the retaining fasteners from the number 2 pivot pin at the steer end of the machine (index #14).

98 Use a soft metal drift to remove the number 2 pivot pin (index #14) from the steer end of the machine. Remove the number 2 inner arm (index #30) from the machine.

⚠ CAUTION Crushing hazard. The number 2 inner arm (index #30) may become unbalanced and fall if not properly supported when the pivot pin is removed.

99 Attach a lifting strap from an overhead crane to the number 1 inner arm (index #16).

100 Raise the number 1 inner arm (index #16) approximately 2 feet / 60 cm.

101 Place a 4 x 4 x 48 inch / 10 cm x 10 cm x 1.2 m long block across both sides of the chassis under the number 1 center pivot pin (index #15).

102 Lower the scissor arms onto the block that was placed across the chassis.

⚠ CAUTION Bodily injury hazard. Keep hands clear of moving parts when lowering the scissor arms.

103 Attach a lifting strap from an overhead crane to the lug of the rod end of the lower lift cylinder.

104 Tag, disconnect and plug the hydraulic hose on the lower lift cylinder. Cap the fittings on the cylinder.

⚠ WARNING Bodily injury hazard. Spraying hydraulic oil can penetrate and burn skin. Loosen hydraulic connections very slowly to allow the oil pressure to dissipate gradually. Do not allow oil to squirt or spray.

https://truckmanualshub.com/

105 Tag and disconnect the wire harness from the solenoid valve on the cylinder.

106 Tag and disconnect the wires and manual lowering cable from the solenoid valve on the cylinder.

107 **Models with platform overload option:** Tag and disconnect the wire harness from the platform overload pressure transducer.

Note: After replacing the scissor assembly, the platform overload system must be calibrated. Refer to Repair Procedure 9-10, *How to Calibrate the Platform Overload System (if equipped)*.

108 Raise the lift cylinder to a vertical position.

109 Remove the pin retaining fasteners from the lift cylinder barrel-end pivot pin (index #28). Use a soft metal drift to remove the pin. Remove the lift cylinder from the machine.

⚠ CAUTION Crushing hazard. The lift cylinder will fall if not properly supported when the pivot pin is removed.

NOTICE Component damage hazard. Be careful not to damage the valve or fittings on the cylinder while removing it from the machine.

110 Remove the cables from the number 1 cable bridge and lay them off to the side.

NOTICE Component damage hazard. Cables can be damaged if they are kinked or pinched.

111 Remove the cables from the number 1 cable bridge and lay them off to the side.

112 Disconnect the number 1 cable bridge from the number 1 outer arm (index #34) and remove the cable bridge from the machine.

113 Attach a lifting strap from an overhead crane to the number 1 inner arm (index #16).

114 Raise the arm slightly and remove the block.

115 Lower the arm to the stowed position.

⚠ CAUTION Bodily injury hazard. Keep hands clear of moving parts when lowering the scissor arms.

116 Secure the ends of the scissor arms together at the steer end of the machine with a strap or other suitable device.

117 Secure the ends of the scissor arms together at the non-steer end of the machine with a strap or other suitable device.

118 Remove the retaining fasteners securing the chassis mount bracket to the chassis.

119 Remove the linkset from the machine.

⚠ CAUTION Bodily injury hazard. The number 1 inner and outer arms (index #16 and #34) may become unbalanced and fall if not properly supported when removed from the machine.

NOTICE Component damage hazard. Be sure not to damage the limit switch or level sensor components when the number 1 inner and outer arms (index #16 and 34) are removed from the machine.

https://truckmanualshub.com/

9-7
Scissor Arm Wear Pads

How to Replace the Scissor Arm Wear Pads

Note: Machines equipped with a Platform Height Sensor, begin at step 1. Machines without a Platform Height Sensor, begin at step 24.

1 Turn the key switch to ground control and pull out the red Emergency Stop button to the on position at both the ground and platform controls.

2 Raise the platform 7 to 8 feet / 2.1 to 2.4 m.

3 Lift the safety arm, move it to the center of the scissor arm and rotate down to a vertical position.

4 Lower the platform onto the safety arm.

WARNING Crushing hazard. Keep hands clear of the safety arm when lowering the platform.

5 At the ground control, turn the key switch to the off position and push in the red Emergency Stop button to the off position.

6 Disconnect the battery pack from the machine.

WARNING Electrocution/burn hazard. Contact with electrically charged circuits could result in death or serious injury. Remove all rings, watches and other jewelry.

7 Remove the fasteners securing the platform height sensor cover to the large platform height sensor bracket.

8 Remove the platform height sensor cover.

9 Tag and disconnect the platform height sensor from the platform height sensor harness.

10 Remove the fastener securing the platform height sensor assembly to the number 1 inner arm.

11 Remove the platform height sensor assembly from the number 1 pivot pin.

12 Remove the plastic nut securing the squeeze connector to the large platform height sensor bracket.

13 Remove the squeeze connector from the large platform height sensor bracket.

14 Remove the fasteners securing the large platform height sensor bracket to the number 1 inner arm pivot bracket.

15 Remove the large platform height sensor bracket from the number 1 inner arm pivot bracket.

16 Install the fasteners removed in 14 to the number 1 inner arm pivot bracket and chassis.

DANGER Tip-over hazard. Failure to install the fasteners securing the number 1 inner arm pivot bracket to the chassis, could result in the machine tipping over, causing death or serious injury.

17 Connect the battery pack to the machine.

18 Turn the key switch to the ground control position.

19 Press and hold the ground control scroll up and scroll down buttons.

20 Pull out the red Emergency Stop button to the on position at the ground controls.

https://truckmanualshub.com/

21 Using the ground control menu buttons, navigate to Service Override Mode. Select Service Override Mode.

Note: The machine must be in Service Override Mode to raise the platform. While in Service Override Mode, only the GCON will operate with limited functionality. The platform will raise a predetermined amount of time and stop.

22 Raise the platform and return the safety arm to the stowed position.

23 Fully lower the platform to the stowed position.

24 Remove the platform. Refer to Repair Procedure, *How to Remove the Platform*.

25 Support and secure the entry ladder to an appropriate lifting device.

26 Remove the fasteners from the entry ladder and remove the entry ladder from the machine.

⚠ CAUTION Crushing hazard. The entry ladder will fall if not properly supported and secured to the lifting device.

27 Secure the ends of the scissor arms together at the steer end of the machine with a strap or other suitable device.

28 Secure the ends of the scissor arms together at the non-steer end of the machine with a strap or other suitable device.

29 Remove the retaining fasteners securing the chassis mount bracket to the chassis at the steer end of the machine.

30 Attach a lifting strap from an overhead crane to the scissor arm assembly.

31 Raise the scissor arm assembly at the steer end with the overhead crane until the chassis mount bracket will clear the level sensor.

32 Remove the scissor assembly from the machine just enough to access both wear pads.

⚠ DANGER Crushing hazard. The scissor assembly will fall if not properly supported when removed from the drive chassis.

NOTICE Component damage hazard. Be careful not to damage the level sensor or limit switch while moving the scissor assembly.

33 Remove both old wear pads.

34 Install two new wear pads.

35 Slide the scissor assembly back into the drive chassis.

36 Lower the scissor assembly into position and install the chassis mount bracket onto the chassis. Securely install and tighten the fasteners. Do not over tighten.

NOTICE Component damage hazard. Be careful not to damage the level sensor or limit switch while moving the scissor assembly.

https://truckmanualshub.com/

Scissor Components

9-8 Platform Height Sensor

How to Disassemble the Platform Height Sensor Assembly (if equipped)

Note: When a Platform Height Sensor Assembly is removed or replaced, the platform overload system must be calibrated. Refer to Repair Procedure, *How to Calibrate the Platform Overload System (if equipped)* and follow the no load calibration procedure.

1 Raise the platform 7 to 8 feet / 2.1 to 2.4 m.

2 Lift the safety arm, move it to the center of the scissor arm and rotate down to a vertical position.

3 Lower the platform onto the safety arm.

⚠WARNING Crushing hazard. Keep hands clear of the safety arm when lowering the platform.

4 Turn the key switch to the off position.

5 Disconnect the battery pack from the machine.

⚠WARNING Electrocution/burn hazard. Contact with electrically charged circuits could result in death or serious injury. Remove all rings, watches and other jewelry.

6 Remove the fasteners securing the large platform height sensor cover to the large platform height sensor bracket.

7 Remove the platform height sensor cover.

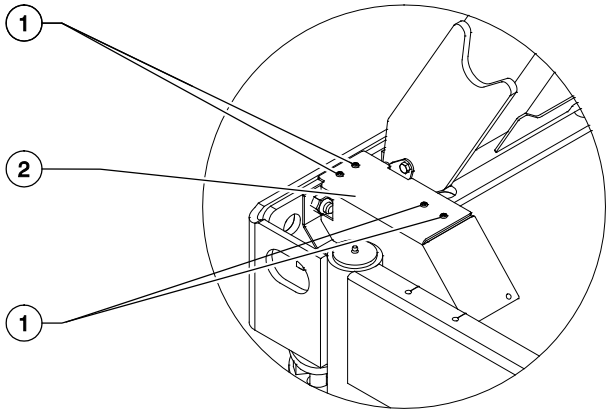

Steer End

1 fasteners (platform height sensor cover)
2 platform height sensor cover

8 Tag and disconnect the platform height sensor from the platform height sensor harness.

9 Remove the fastener securing the platform height sensor assembly to the number 1 inner arm.

10 Remove the platform height sensor assembly from the number 1 pivot pin.

11 Remove the set screw securing the lever arm to the platform height sensor.

12 Remove the lever arm from the platform height sensor assembly.

13 Working with the platform height sensor assembly, remove the Deustch connector from the plastic clip.

14 Remove the fasteners securing the platform height sensor to the small platform height sensor bracket.

https://truckmanualshub.com/

Scissor Components

15 Remove the platform height sensor from the small angle sensor bracket.

16 Remove the plastic nut securing the squeeze connector to the large platform height sensor bracket.

17 Remove the squeeze connector from the large platform height sensor bracket.

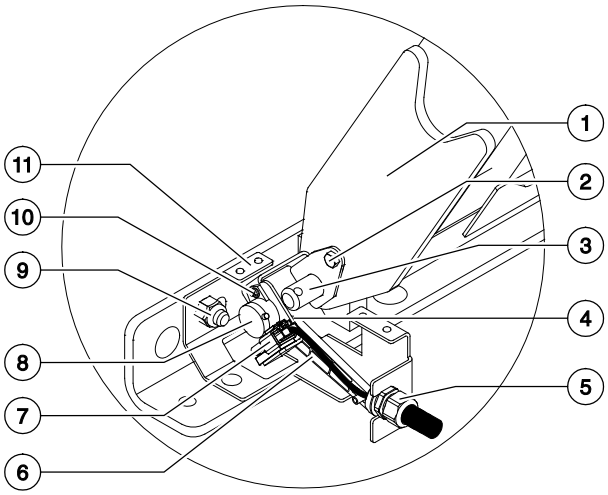

Steer End

1 number 1 inner arm
2 fastener (platform height sensor assembly)
3 number 1 pivot pin
4 lever arm retaining screw
5 squeeze connector
6 lever arm
7 platform height sensor harness connection
8 platform height sensor
9 fastener (large platform height sensor bracket)
10 fastener (platform height sensor)
11 platform height sensor assembly

18 Remove the fasteners securing the large platform height bracket to the number 1 inner arm pivot bracket.

19 Remove the large platform height sensor bracket from the number 1 inner arm pivot bracket.

DANGER Tip-over hazard. Failure to install the fasteners securing the large platform height sensor bracket and number 1 inner arm pivot bracket to the chassis, could result in the machine tipping over, causing death or serious injury.

https://truckmanualshub.com/

Scissor Components

9-9
Lift Cylinders

How to Remove the Lift Cylinder

⚠WARNING Bodily injury hazard. The procedures in this section require specific repair skills, lifting equipment and a suitable workshop. Attempting this procedure without these skills and tools could result in death or serious injury and significant component damage. Dealer service is required.

Note: When removing a hose assembly or fitting, the O-ring (if equipped) on the fitting and/or hose end must be replaced. All connections must be torqued to specification during installation. Refer to Specifications, *Hydraulic Hose and Fitting Torque Specifications.*

GS-1530, GS-1532, GS-1930 and GS-1932:

Note: Models without a pressure transducer follow steps 1 through 23, 27 and 28.
Models equipped with a pressure transducer follow steps 1 through 28.

1 Turn the key switch to ground controls and pull out the red Emergency Stop button to the on position at both ground and platform controls.

2 Raise the platform 7 to 8 feet / 2.1 to 2.4 m.

3 Lift the safety arm, move it to the center of the scissor arm and rotate down to a vertical position.

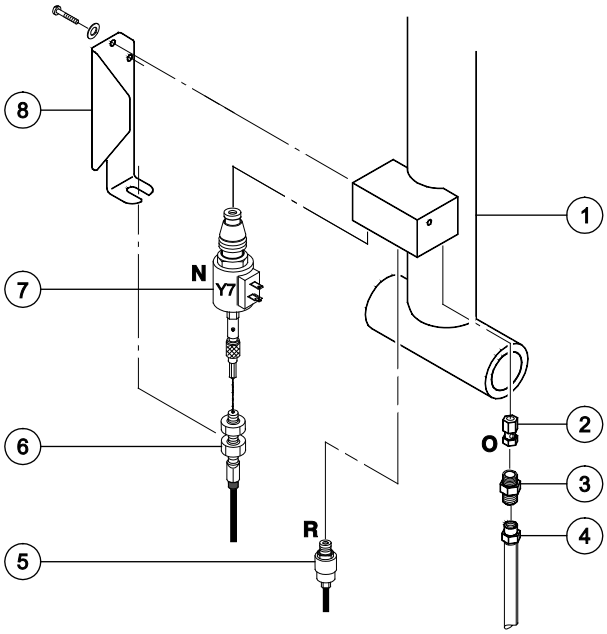

1 lift cylinder
2 orifice(schematic item O)
3 connector fitting
4 hydraulic hose
5 pressure transducer(schematic item R)(if equipped)
6 manual lowering cable
7 solenoid valve(schematic item N)
8 cable mount bracket

4 Lower the platform onto the safety arm.

⚠WARNING Crushing hazard. Keep hands clear of the safety arm when lowering the platform.

5 Using a suitable lifting device, support the link stack at the steer end of the machine.

https://truckmanualshub.com/

6 At the ground controls, turn the key switch to the off position and push in the red Emergency Stop button to the off position.

7 Disconnect the battery pack from the machine.

WARNING Electrocution/burn hazard. Contact with electrically charged circuits could result in death or serious injury. Remove all rings, watches and other jewelry.

8 Tag and disconnect the wiring from the solenoid valve coil at the barrel end of the lift cylinder.

9 If equipped, tag and disconnect the three-pin connector from the pressure transducer harness. To remove the pressure transducer refer to Repair Procedure, *How to Remove the Pressure Transducer (if equipped).*

10 Loosen the adjustment nuts on the solenoid valve and disconnect the manual lowering cable from the valve.

Note: During assembly, the manual platform lowering cable needs to be properly adjusted. Refer to Repair Procedure, *How to Adjust the Manual Platform Lowering Cable.*

11 Remove the fasteners securing the manual lowering cable mount bracket to the cylinder. Remove the bracket from the cylinder.

12 Tag, disconnect and plug the hydraulic hoses on the lift cylinder. Cap the fittings on the cylinder.

WARNING Bodily injury hazard. Spraying hydraulic oil can penetrate and burn skin. Loosen hydraulic connections very slowly to allow the oil pressure to dissipate gradually. Do not allow oil to squirt or spray.

13 Attach a lifting strap from an overhead crane to the rod end of the lift cylinder for support.

14 Remove the fasteners from the lift cylinder rod-end pivot pin. Use a soft metal drift to remove the pin.

CAUTION Crushing hazard. The lift cylinder will fall if not properly supported when the pivot pin is removed.

15 Lower the cylinder onto the number 2 inner arm.

16 Attach a lifting strap from an overhead crane or similar lifting device to the barrel end of the lift cylinder for support.

17 Remove the fasteners from the lift cylinder barrel-end pivot pin. Use a soft metal drift to remove the pin.

CAUTION Crushing hazard. The lift cylinder will fall if not properly supported when the pivot pin is removed.

18 Support and secure the lift cylinder to an appropriate lifting device.

19 Remove the lift cylinder through the scissor arms at the steer end of the machine.

CAUTION Crushing hazard. The lift cylinder will become unbalanced and fall if not properly supported and secured to the lifting device.

NOTICE Component damage hazard. Be careful not to damage the valve or fittings on the cylinder while removing it from the machine.

https://truckmanualshub.com/

Scissor Components

20 Install new cylinder, fittings, hoses and pressure transducer (if equipped).

Torque specifications	
Solenoid valve, 2 position 2 way, N.C. (schematic item N)	20 ft-lbs 27 Nm
Coil nut	5 ft-lbs 7 Nm
Pressure transducer(if equipped) (schematic item R)	27 ft-lbs 37 Nm

21 Remove the lifting device supporting the link stack at the steer end of the machine.

22 Connect the battery pack to the machine.

23 Turn the key switch to ground control.

Models without a pressure transducer continue at step 27.

Models with a pressure transducer continue at step 24.

24 Press and hold the ground control scroll up and scroll down buttons.

25 Pull out the red Emergency Stop button to the on position at the ground controls.

26 Using the ground control menu buttons, navigate to Service Override Mode. Select Service Override Mode.

Note: The machine must be in Service Override Mode to raise the platform. While in Service Override Mode, only the GCON will operate with limited functionality. The platform will raise a predetermined amount of time and stop.

27 Raise the platform and rotate the safety arm to the stowed position.

28 Fully lower the platform to the stowed position.

Note: Models with a pressure transducer, calibrate the Platform Overload System. Refer to Repair Procedure, *How to Calibrate the Platform Overload System (if equipped).*

GS-2032, GS-2632, GS-2046 and GS-2646

WARNING Bodily injury hazard. The procedures in this section require specific repair skills, lifting equipment and a suitable workshop. Attempting this procedure without these skills and tools could result in death or serious injury and significant component damage. Dealer service is required.

Note: When removing a hose assembly or fitting, the O-ring (if equipped) on the fitting and/or hose end must be replaced. All connections must be torqued to specification during installation. Refer to Specifications, *Hydraulic Hose and Fitting Torque Specifications.*

Note: Models without a pressure transducer follow steps 1 through 23, 27 and 28.
Models equipped with a pressure transducer follow steps 1 through 28.

1 Turn the key switch to ground controls and pull out the red Emergency Stop button to the on position at both ground and platform controls.

2 Raise the platform 7 to 8 feet / 2.1 to 2.4 m.

https://truckmanualshub.com/

Scissor Components

3 Lift the safety arm, move it to the center of the scissor arm and rotate down to a vertical position.

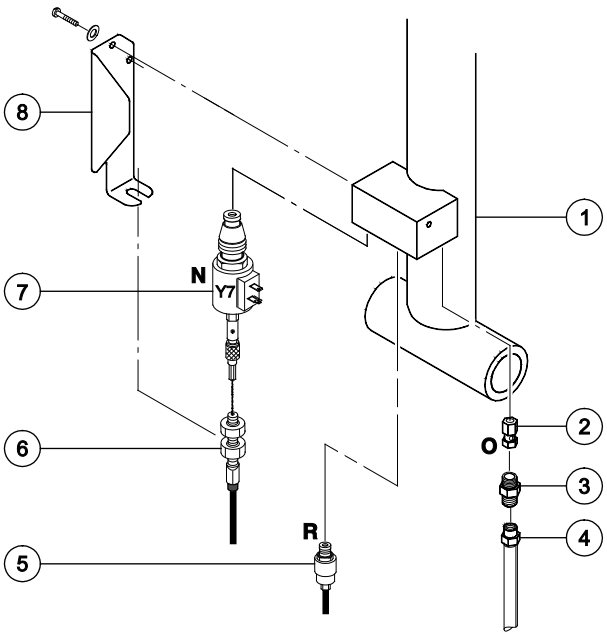

1 lift cylinder
2 orifice(schematic item O)
3 connector fitting
4 hydraulic hose
5 pressure transducer(schematic item R)(if equipped)
6 manual lowering cable
7 solenoid valve(schematic item N)
8 cable mount bracket

4 Lower the platform onto the safety arm.

⚠WARNING Crushing hazard. Keep hands clear of the safety arm when lowering the platform.

5 Using a suitable lifting device, support the link stack at the steer end of the machine.

6 At the ground controls, turn the key switch to the off position and push in the red Emergency Stop button to the off position.

7 Disconnect the battery pack from the machine.

⚠WARNING Electrocution/burn hazard. Contact with electrically charged circuits could result in death or serious injury. Remove all rings, watches and other jewelry.

8 Tag and disconnect the wiring from the solenoid valve coil at the barrel end of the lift cylinder.

9 If equipped, tag and disconnect the three-pin connector from the pressure transducer harness. To remove the pressure transducer refer to Repair Procedure, *How to Remove the Pressure Transducer (if equipped).*

10 Loosen the adjustment nuts on the solenoid valve and disconnect the manual lowering cable from the valve.

Note: During assembly, the manual platform lowering cable needs to be properly adjusted. Refer to Repair Procedure, *How to Adjust the Manual Platform Lowering Cable.*

11 Remove the fasteners securing the manual lowering cable mount bracket to the cylinder. Remove the bracket from the cylinder.

12 Tag, disconnect and plug the hydraulic hoses on the lift cylinder. Cap the fittings on the cylinder.

⚠WARNING Bodily injury hazard. Spraying hydraulic oil can penetrate and burn skin. Loosen hydraulic connections very slowly to allow the oil pressure to dissipate gradually. Do not allow oil to squirt or spray.

https://truckmanualshub.com/

Scissor Components

13 Attach a lifting strap from an overhead crane to the rod end of the lift cylinder for support.

14 Remove the fasteners from the lift cylinder rod-end pivot pin. Use a soft metal drift to remove the pin.

⚠ CAUTION Crushing hazard. The lift cylinder will fall if not properly supported when the pivot pin is removed.

15 Lower the cylinder onto the number 1 inner arm cylinder plate.

16 Attach a lifting strap from an overhead crane or similar lifting device to the barrel end of the lift cylinder for support.

17 Remove the fasteners from the lift cylinder barrel-end pivot pin. Use a soft metal drift to remove the pin.

⚠ CAUTION Crushing hazard. The lift cylinder will fall if not properly supported when the pivot pin is removed.

18 Support and secure the lift cylinder to an appropriate lifting device.

19 Remove the lift cylinder through the scissor arms at the steer end of the machine.

⚠ CAUTION Crushing hazard. The lift cylinder will become unbalanced and fall if not properly supported and secured to the lifting device.

NOTICE Component damage hazard. Be careful not to damage the valve or fittings on the cylinder while removing it from the machine.

20 Install new cylinder, fittings, hoses and pressure transducer (if equipped).

Torque specifications	
Solenoid valve, 2 position 2 way, N.C. (schematic item N)	20 ft-lbs 27 Nm
Coil nut	5 ft-lbs 7 Nm
Pressure transducer(if equipped) (schematic item R)	27 ft-lbs 37 Nm

21 Remove the lifting device supporting the link stack at the steer end of the machine.

22 Connect the battery pack to the machine.

23 Turn the key switch to ground control.

Models without a pressure transducer continue at step 27.

Models with a pressure transducer continue at step 24.

24 Press and hold the ground control scroll up and scroll down buttons.

25 Pull out the red Emergency Stop button to the on position at the ground controls.

26 Using the ground control menu buttons, navigate to Service Override Mode. Select Service Override Mode.

Note: The machine must be in Service Override Mode to raise the platform. While in Service Override Mode, only the GCON will operate with limited functionality. The platform will raise a predetermined amount of time and stop.

27 Raise the platform and rotate the safety arm to the stowed position.

28 Fully lower the platform to the stowed position.

Note: Models with a pressure transducer, calibrate the Platform Overload System. Refer to Repair Procedure, *How to Calibrate the Platform Overload System (if equipped).*

https://truckmanualshub.com/

Scissor Components

GS-3232 and GS-3246

⚠WARNING Bodily injury hazard. The procedures in this section require specific repair skills, lifting equipment and a suitable workshop. Attempting this procedure without these skills and tools could result in death or serious injury and significant component damage. Dealer service is required.

Note: When removing a hose assembly or fitting, the O-ring (if equipped) on the fitting and/or hose end must be replaced. All connections must be torqued to specification during installation. Refer to Specifications, *Hydraulic Hose and Fitting Torque Specifications.*

Note: Models without a pressure transducer follow steps 1 through 21, 25 and 26.
Models equipped with a pressure transducer follow steps 1 through 26.

1 Turn the key switch to ground controls and pull out the red Emergency Stop button to the on position at both ground and platform controls.

2 Raise the platform 7 to 8 feet / 2.1 to 2.4 m.

3 Lift the safety arm, move it to the center of the scissor arm and rotate down to a vertical position.

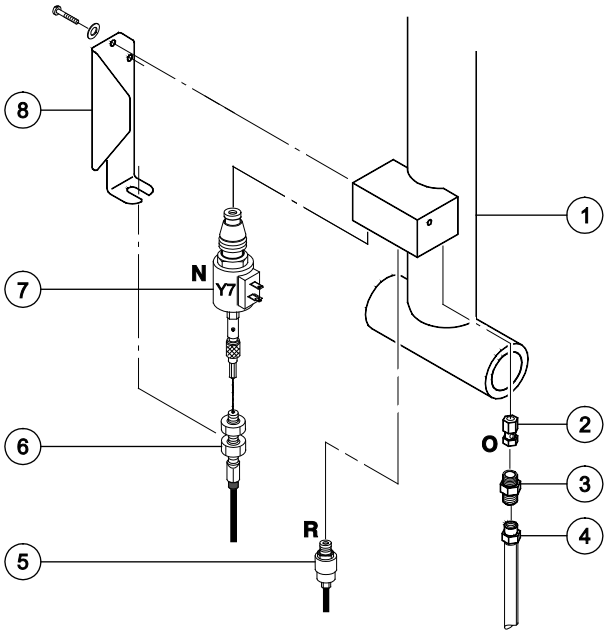

1 lift cylinder
2 orifice(schematic item O)
3 connector fitting
4 hydraulic hose
5 pressure transducer(schematic item R)(if equipped)
6 manual lowering cable
7 solenoid valve(schematic item N)
8 cable mount bracket

https://truckmanualshub.com/

Scissor Components

4 Lower the platform onto the safety arm.

⚠WARNING Crushing hazard. Keep hands clear of the safety arm when lowering the platform.

5 Using a suitable lifting device, support the link stack at the steer end of the machine.

6 At the ground controls, turn the key switch to the off position and push in the red Emergency Stop button to the off position.

7 Disconnect the battery pack from the machine.

⚠WARNING Electrocution/burn hazard. Contact with electrically charged circuits could result in death or serious injury. Remove all rings, watches and other jewelry.

Note: At the lower lift cylinder, install the orifice fitting with the small opening of the orifice fitting closest to the supply hose.

8 Tag and disconnect the wiring from the solenoid valve coil at the barrel end of the lift cylinder.

Skip to step 13 if removing the upper cylinder.

9 If equipped, tag and disconnect the three-pin connector from the pressure transducer harness. To remove the pressure transducer refer to Repair Procedure, *How to Remove the Pressure Transducer (if equipped).*

10 Loosen the adjustment nuts on the solenoid valve and disconnect the manual lowering cable from the valve.

Note: During assembly, the manual platform lowering cable needs to be properly adjusted. Refer to Repair Procedure, *How to Adjust the Manual Platform Lowering Cable.*

11 Remove the fasteners securing the manual lowering cable mount bracket to the cylinder. Remove the bracket from the cylinder.

12 Tag, disconnect and plug the hydraulic hoses on the lift cylinder. Cap the fittings on the cylinder.

⚠WARNING Bodily injury hazard. Spraying hydraulic oil can penetrate and burn skin. Loosen hydraulic connections very slowly to allow the oil pressure to dissipate gradually. Do not allow oil to squirt or spray.

13 Attach a lifting strap from an overhead crane or similar lifting device to the barrel end of the lift cylinder for support.

14 Remove the fasteners from the lift cylinder rod-end pivot pin. Use a soft metal drift to remove the pin.

⚠CAUTION Crushing hazard. The lift cylinder will fall if not properly supported when the pivot pin is removed.

15 Lower the cylinder onto the number 1 inner arm cylinder plate.

https://truckmanualshub.com/

16 Attach a lifting strap from an overhead crane or similar lifting device to the barrel end of the lift cylinder for support.

17 Remove the fasteners from the lift cylinder barrel-end pivot pin. Use a soft metal drift to remove the pin.

⚠ CAUTION Crushing hazard. The lift cylinder will fall if not properly supported when the pivot pin is removed.

18 Support and secure the lift cylinder to an appropriate lifting device.

19 Remove the lift cylinder through the scissor arms at the steer end of the machine.

⚠ CAUTION Crushing hazard. The lift cylinder will become unbalanced and fall if not properly supported and secured to the lifting device.

NOTICE Component damage hazard. Be careful not to damage the valve or fittings on the cylinder while removing it from the machine.

20 Install new cylinder, fittings, hoses and pressure transducer (if equipped).

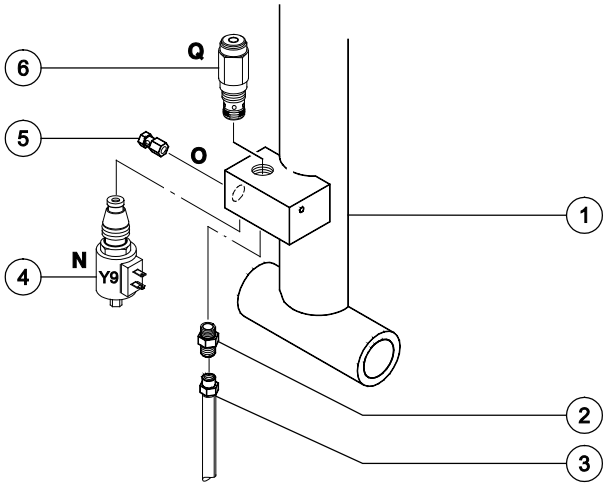

Upper Lift Cylinder

1 lift cylinder
2 connector fitting
3 hydraulic hose
4 solenoid valve(schematic item N)
5 orifice(schematic item O)
6 relief valve(schematic item Q)

Note: At the upper lift cylinder, install the orifice fitting with the small opening of the orifice fitting closest to the supply hose.

Torque specifications	
Solenoid valve, 2 position 2 way, N.C. (schematic item N)	20 ft-lbs 27 Nm
Relief valve (schematic item Q)	20 ft-lbs 27 Nm
Coil nut	5 ft-lbs 7 Nm

https://truckmanualshub.com/

Scissor Components

21 Remove the lifting device supporting the link stack at the steer end of the machine.

22 Connect the battery pack to the machine.

23 Turn the key switch to ground control.

Models without a pressure transducer continue at step 27.

Models with a pressure transducer continue at step 24.

24 Press and hold the ground control scroll up and scroll down buttons.

25 Pull out the red Emergency Stop button to the on position at the ground controls.

26 Using the ground control menu buttons, navigate to Service Override Mode. Select Service Override Mode.

Note: The machine must be in Service Override Mode to raise the platform. While in Service Override Mode, only the GCON will operate with limited functionality. The platform will raise a predetermined amount of time and stop.

27 Raise the platform and rotate the safety arm to the stowed position.

28 Fully lower the platform to the stowed position.

Note: Models with a pressure transducer, calibrate the Platform Overload System. Refer to Repair Procedure, *How to Calibrate the Platform Overload System (if equipped).*

GS-4047

⚠WARNING Bodily injury hazard. The procedures in this section require specific repair skills, lifting equipment and a suitable workshop. Attempting this procedure without these skills and tools could result in death or serious injury and significant component damage. Dealer service is required.

Note: When removing a hose assembly or fitting, the O-ring (if equipped) on the fitting and/or hose end must be replaced. All connections must be torqued to specification during installation. Refer to Specifications, *Hydraulic Hose and Fitting Torque Specifications.*

1 Turn the key switch to ground controls and pull out the red Emergency Stop button to the on position at both ground and platform controls.

2 Raise the platform 7 to 8 feet / 2.1 to 2.4 m.

https://truckmanualshub.com/

Scissor Components

3 Lift the safety arm, move it to the center of the scissor arm and rotate down to a vertical position.

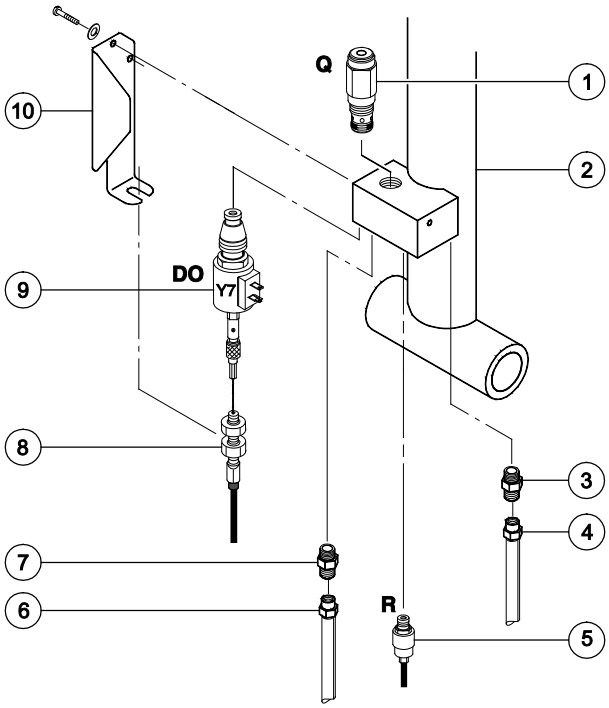

1 relief valve(schematic item Q)
2 lift cylinder
3 connector fitting
4 hydraulic hose
5 pressure transducer(schematic item R)(if equipped)
6 manual lowering cable
7 solenoid valve(schematic item DO)
8 cable mount bracket

4 Lower the platform onto the safety arm.

WARNING Crushing hazard. Keep hands clear of the safety arm when lowering the platform.

5 Using a suitable lifting device, support the link stack at the steer end of the machine.

6 At the ground controls, turn the key switch to the off position and push in the red Emergency Stop button to the off position.

7 Disconnect the battery pack from the machine.

WARNING Electrocution/burn hazard. Contact with electrically charged circuits could result in death or serious injury. Remove all rings, watches and other jewelry.

8 Tag and disconnect the wiring from the solenoid valve coil at the barrel end of the lift cylinder.

Skip to step 13 if removing the upper cylinder.

9 If equipped, tag and disconnect the three-pin connector from the pressure transducer harness. To remove the pressure transducer refer to Repair Procedure, *How to Remove the Pressure Transducer (if equipped).*

10 Loosen the adjustment nuts on the solenoid valve and disconnect the manual lowering cable from the valve.

Note: During assembly, the manual platform lowering cable needs to be properly adjusted. Refer to Repair Procedure, *How to Adjust the Manual Platform Lowering Cable.*

11 Remove the fasteners securing the manual lowering cable mount bracket to the cylinder. Remove the bracket from the cylinder.

https://truckmanualshub.com/

Scissor Components

12 Tag, disconnect and plug the hydraulic hoses on the lift cylinder. Cap the fittings on the cylinder.

⚠WARNING Bodily injury hazard. Spraying hydraulic oil can penetrate and burn skin. Loosen hydraulic connections very slowly to allow the oil pressure to dissipate gradually. Do not allow oil to squirt or spray.

13 Attach a lifting strap from an overhead crane or similar lifting device to the barrel end of the lift cylinder for support.

14 Remove the fasteners from the lift cylinder rod-end pivot pin. Use a soft metal drift to remove the pin.

⚠CAUTION Crushing hazard. The lift cylinder will fall if not properly supported when the pivot pin is removed.

15 Lower the cylinder onto the number 1 inner arm cylinder plate.

16 Attach a lifting strap from an overhead crane or similar lifting device to the barrel end of the lift cylinder for support.

17 Remove the fasteners from the lift cylinder barrel-end pivot pin. Use a soft metal drift to remove the pin.

⚠CAUTION Crushing hazard. The lift cylinder will fall if not properly supported when the pivot pin is removed.

18 Support and secure the lift cylinder to an appropriate lifting device.

19 Remove the lift cylinder through the scissor arms at the steer end of the machine.

⚠CAUTION Crushing hazard. The lift cylinder will become unbalanced and fall if not properly supported and secured to the lifting device.

NOTICE Component damage hazard. Be careful not to damage the valve or fittings on the cylinder while removing it from the machine.

20 Install new cylinder, fittings, hoses and pressure transducer (if equipped).

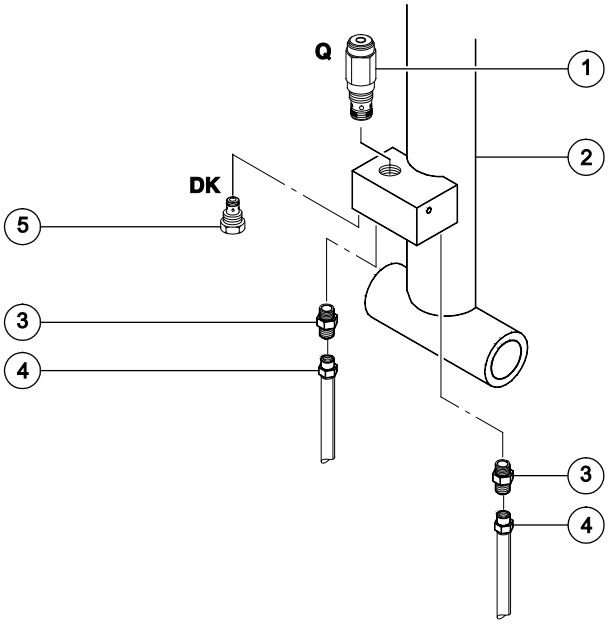

Upper Lift Cylinder

1 relief valve(schematic item Q)
2 lift cylinder
3 connector fitting
4 hydraulic hose
5 check valve(schematic item DK)

https://truckmanualshub.com/

Torque specifications	
Solenoid valve, 2 position 2 way, N.C. (schematic item N)	20 ft-lbs 27 Nm
Relief valve (schematic item Q)	20 ft-lbs 27 Nm
Coil nut	5 ft-lbs 7 Nm
Pressure transducer(if equipped) (schematic item R)	27 ft-lbs 37 Nm
Check valve (schematic item DK)	20 ft-lbs 27 Nm

21 Remove the lifting device supporting the link stack at the steer end of the machine.

22 Connect the battery pack to the machine.

23 Turn the key switch to ground controls.

24 Press and hold the ground control scroll up and scroll down buttons.

25 Pull out the red Emergency Stop button to the on position at the ground controls.

26 Using the ground control menu buttons, navigate to Service Override Mode. Select Service Override Mode.

Note: The machine must be in Service Override Mode to raise the platform. While in Service Override Mode, only the GCON will operate with limited functionality. The platform will raise a predetermined amount of time and stop.

27 Raise the platform and rotate the safety arm to the stowed position.

28 Fully lower the platform to the stowed position.

Note: Models with a pressure transducer, calibrate the Platform Overload System. Refer to Repair Procedure, *How to Calibrate the Platform Overload System (if equipped).*

9-10 Pressure Transducer

How to Remove the Pressure Transducer (if equipped)

Note: Calibrating the platform overload system is not required if the pressure transducer is the only component replaced on the machine lift structure. In the event of frequent nuisance trips occurring after a pressure transducer is replaced, a no load calibration is recommended. Refer to Repair Procedure, *How to Calibrate the Platform Overload System (if equipped)*

1 Turn the key switch to ground controls and pull out the red Emergency Stop button to the on position at both ground and platform controls.

2 Raise the platform 7 to 8 feet / 2.1 to 2.4 m.

3 Lift the safety arm, move it to the center of the scissor arm and rotate down to a vertical position.

4 Lower the platform onto the safety arm.

5 At the ground controls, turn the key switch to the off position and push in the red Emergency Stop button to the off position.

6 Disconnect the battery pack from the machine.

⚠WARNING Electrocution/burn hazard. Contact with electrically charged circuits could result in death or serious injury. Remove all rings, watches and other jewelry.

7 Pull the manual lowering cable and hold for 3 seconds.

8 Tag and disconnect the three-pin connector from the pressure transducer harness.

https://truckmanualshub.com/

Scissor Components

9 Slowly loosen the pressure transducer from the lift cylinder and remove. Discard the pressure transducer.

⚠WARNING Bodily injury hazard. Spraying hydraulic oil can penetrate and burn skin. Loosen hydraulic connections very slowly to allow the oil pressure to dissipate gradually. Do not allow oil to squirt or spray.

10 Connect the battery pack to the machine.

11 Turn the key switch to ground controls.

12 Press and hold the ground control scroll up and scroll down buttons.

13 Pull out the red Emergency Stop button to the on position at the ground controls.

14 Using the ground control menu buttons, navigate to Service Override Mode. Select Service Override Mode.

Note: The machine must be in Service Override Mode to raise the platform. While in Service Override Mode, only the GCON will operate with limited functionality. The platform will raise a predetermined amount of time and stop.

15 Raise the platform and rotate the safety arm to the stowed position.

16 Fully lower the platform to the stowed position.

Note: After replacing the pressure transducer, calibrating the platform overload system is not required. If the machine begins to nuisance trip frequently, a no load calibration is recommended. Refer to Repair Procedure, *How to Calibrate the Platform Overload System (if equipped).*

Torque specifications	
Pressure transducer(if equipped) (schematic item R)	27 ft-lbs 37 Nm

https://truckmanualshub.com/

9-11
Platform Overload System (if equipped)

How to Calibrate the Platform Overload System

Perform this procedure with the machine in the stowed position and on a firm, level surface that is free of obstructions.

Personnel are not allowed in the platform while calibrating the platform overload system.

Perform this procedure in an environment that allows the platform to be fully raised. Models rated for indoor use only, should be calibrated inside a facility with enough ceiling height to fully raise the platform. If the facility height is not suitable to fully raise the platform, then an indoor only rated model may be calibrated outdoors if wind speeds are less then 28 mph / 12.5 m/s. Only use flat weights while calibrating indoor only rated machines, outdoors.

Perform this procedure after confirming that the platform height sensor is not damaged and functions correctly.

There are two options to the platform overload calibration procedure in this section, Full Load Calibration and No Load Calibration. Full Load Calibration has two steps requiring calibration with and without rated load in the platform. No Load Calibration does not require rated load in the platform.

Note: No Load Calibration can be completed stand alone to fulfill the C-2 overload calibration requirements, if the machine has completed the Full Load Calibration procedure.

Note: If a new Ground Controller is installed on a machine, the Full Load Calibration procedure is required to maintain rated load platform capacity. If a No Load Calibration is performed, machine lifting performance will be significantly reduced.

Note: Ambient temperature must be above 32°F / 0°C before calibrating the Platform Overload System.

Note: To calibrate the platform overload system, follow the menu structure indicated on the ground control LCD display.

https://truckmanualshub.com/

Scissor Components

Full Load Calibration: Part 1

1 Fully charge the batteries and check the hydraulic fluid level.

Note: The hydraulic fluid level must be between the FULL and ADD marks on the hydraulic tank.

2 Apply a thin layer of dry film lubricant to the area of the chassis and platform, where the scissor arm wear pads make contact.

3 Chock both sides of the wheels at the steer end of the machine.

4 Using a suitable lifting device, place a test weight corresponding to the machine maximum load, in the center of the platform deck. Secure the weight to the platform. Refer to the chart below.

GS-1530 and GS-1532	272 kg
GS-1930 and GS-1932	227 kg
GS-2032	363 kg
GS-2632	227 kg
GS-3232	227 kg

Note: In the event of frequent nuisance trips occurring after calibrating a GS-3232 machine, it is recommended to recalibrate the machine, full load and no load, with 250 kg of weight in the platform.

GS-2046	544 kg
GS-2646	454 kg
GS-3246	317 kg
GS-4047	350 kg

5 Turn the key switch to ground control.

6 At the ground controls, press and hold the Menu Up and Menu Down buttons.

7 While pressing both buttons down, pull out the red Emergency Stop Button.

8 Release the Menu Up and Menu Down buttons after the ground controller powers up.

9 Use the Menu Up or Menu Down buttons to scroll to, Select Option. Press the Enter button.

10 Use the Menu Up or Menu Down buttons to scroll to Platform Overload.

11 Press the Enter button to select Platform Overload.

12 Use the Menu Up or Menu Down buttons to scroll to Platform Overload Calibrate.

13 Press the Enter button to select Platform Overload Calibrate.

14 Confirm the Platform Overload Calibrate selection by pressing the Enter button again.

15 Use the Menu Up or Menu Down buttons to select Full Load calibration.

16 Press the Enter button to select Full Load calibration.

17 Press the Enter button to confirm rated load is in the platform.

18 At the ground controls, press and hold the Function Enable and Platform Up buttons until the platform reaches maximum height.

19 **All Models except GS-4047:** When the platform reaches maximum height, press the ground controls Enter button. Allow the ground controls to gather data. **GS-4047 only:** Press and hold the Menu Enter button to determine the maximum height. The machine will lower for 1.2 seconds and then raise in 1.2 second durations, until maximum height is reached. When the platform reaches the maximum height, a message will appear on the LCD screen to release the Menu Enter button.

Note: If at any point the Menu Enter button is released before the message appears on the LCD screen, the calibration procedure will restart at step 18.

https://truckmanualshub.com/

20 When prompted, press and hold the Function Enable and Platform Down buttons. The platform will lower, then automatically stop at a predetermined point to gather data. Allow the ground controls to gather data.

21 Continue pressing the Function Enable and Platform Down buttons throughout the lowering and data gathering sequence. The machine will stop to gather data and lower several times before the machine reaches the stowed position. When the platform reaches the stowed position, press the enter button.

Note: Software revision H or prior, and GS-3032, GS-2646 and GS-4047 models, continue to step 24.

Note: All other models with software revision J or higher, continue with step 22.

22 When prompted, press and hold the Function Enable and Platform Up buttons until the platform reaches full height. When the platform reaches full height, press the enter button.

Note: If the Function Enable or Platform Up buttons are released while the machine is collecting data, the GCON LCD will prompt the user to lower the platform for 5 seconds before prompting to raise the platform to full height again.

23 When prompted, press and hold the Function Enable and Platform Down buttons until the platform is fully stowed. When the platform reaches the stowed position, press the enter button.

Note: If the Function Enable or Platform Down buttons are released while the machine is collecting data, the GCON LCD will prompt the user to raise the platform for 5 seconds before prompting to lower the platform to the stowed position again.

Note: If the machine is switched to PCON mode to drive the machine to an area for weight removal, step 3 and steps 5 through 14 will have to be repeated before Full Load Calibration: Part 2 is performed. Additionally, the CO25 fault will appear. This is expected and the data collected in Full Load Calibration: Part 1 has not been lost.

24 Using a suitable lifting device, remove the test weight from the platform deck.

25 After the weight is removed from the platform deck, press the Enter button to confirm the weight has been removed.

https://truckmanualshub.com/

Scissor Components

Full Load Calibration: Part 2

26 At the ground controls, press and hold the Function Enable and Platform Up buttons until the platform reaches maximum height.

27 **All Models except GS-4047:** When the platform reaches maximum height, press the Enter button. Allow the ground controls to gather data. **GS-4047 only:** Press and hold the Menu Enter button to determine the maximum height. The machine will lower for 1.2 seconds and then raise in 1.2 second durations, until maximum height is reached. When the platform reaches the maximum height, a message will appear on the LCD screen to release the Menu Enter button.

Note: If at any point the Menu Enter button is released before the message appears on the LCD screen, the calibration procedure will restart at step 26.

28 When prompted, press and hold the Function Enable and Platform Down buttons to lower the platform. The platform will move down, then automatically stop at a predetermined point to gather data. Allow the ground controls to gather data.

29 Continue pressing the Function Enable and Platform Down buttons throughout the lowering and data gathering sequence. The machine will stop to gather data and lower several times before the machine reaches the stowed position. When the platform reaches the stowed position, press the Enter button.

Note: Software revision H or prior, and GS-2032, GS-2646 and GS-4047 models, continue to step 32.

Note: All other models with software revision J or higher, continue with step 30.

30 When prompted, press and hold the Function Enable and Platform Up buttons until the platform reaches full height. When the platform reaches full height, press the enter button.

Note: If the Function Enable or Platform Up buttons are released while the machine is collecting data, the GCON LCD will prompt the user to lower the platform for 5 seconds before prompting to raise the platform to full height again.

31 When prompted, press and hold the Function Enable and Platform Down buttons until the platform is fully stowed. When the platform reaches the stowed position, press the enter button.

Note: If the Function Enable or Platform Down buttons are released while the machine is collecting data, the GCON LCD will prompt the user to raise the platform for 5 seconds before prompting to lower the platform to the stowed position again.

32 When prompted, push the red Emergency Stop button in to complete the Platform Overload Calibration procedure.

https://truckmanualshub.com/

No Load Calibration

1 Fully charge the batteries and check the hydraulic fluid level.

Note: The hydraulic fluid level must be between the FULL and ADD marks on the hydraulic tank.

2 Apply a thin layer of dry film lubricant to the area of the chassis where the scissor arm wear pads make contact.

3 Chock both sides of the wheels at the steer end of the machine.

4 Turn the key switch to ground control.

5 At the ground controls, press and hold the Menu Up and Menu Down buttons.

6 While pressing both buttons down, pull out the red Emergency Stop Button.

7 Release the Menu Up and Menu Down buttons after the ground controller powers up.

8 At the ground controls, use the Menu Up or Menu Down buttons to scroll to Platform Overload.

9 Press the Enter button to select the Platform Overload.

10 Use the Menu Up or Menu Down buttons to scroll to Platform Overload Calibrate.

11 Press the Enter button to select Platform Overload Calibrate.

12 Confirm the Platform Overload Calibrate selection by pressing the Enter button again.

13 Use the Menu Up or Menu Down buttons to select No Load calibration.

14 Press the Enter button to select No Load calibration.

15 Press the Enter button to confirm no load is in the platform.

16 At the ground controls, press and hold the Function Enable and Platform Up buttons until the platform reaches maximum height.

17 **All Models except GS-4047:** When the platform reaches maximum height, press the ground controls Enter button. Allow the ground controls to gather data. **GS-4047 only:** Press and hold the Menu Enter button to determine the maximum height. The machine will lower for 1.2 seconds and then raise in 1.2 second durations, until maximum height is reached. When the platform reaches the maximum height, a message will appear on the LCD screen to release the Menu Enter button. If at any point the Menu Enter button is released before the message appears on the LCD screen, the calibration procedure will restart at step 16.

18 When prompted, press and hold the Function Enable and Platform Down buttons to lower the platform. The platform will move down, then automatically stop at a predetermined point to gather data. Allow the ground controls to gather data.

19 Continue pressing the Function Enable and Platform Down buttons throughout the lowering and data gathering sequence. The machine will stop to gather data and lower several times before the machine reaches the stowed position. When the platform reaches the stowed position, press the Enter button.

Note: Software revision H or prior, and GS-2032, GS-2646 and GS-4047 models, continue to step 22.

Note: All other models with software revision J or higher, continue with step 20.

https://truckmanualshub.com/

20 When prompted, press and hold the Function Enable and Platform Up buttons until the platform reaches full height. When the platform reaches full height, press the enter button.

Note: If the Function Enable or Platform Up buttons are released while the machine is collecting data, the GCON LCD will prompt the user to lower the platform for 5 seconds before prompting to raise the platform to full height again.

21 When prompted, press and hold the Function Enable and Platform Down buttons until the platform is fully stowed. When the platform reaches the stowed position, press the enter button.

Note: If the Function Enable or Platform Down buttons are released while the machine is collecting data, the GCON LCD will prompt the user to raise the platform for 5 seconds before prompting to lower the platform to the stowed position again.

22 When prompted, push the red Emergency Stop button in to complete the No Load Calibration procedure.

9-12 Platform Overload Recovery Message

If the ground controls LCD screen displays **OL: PLATFORM OVERLOADED**, the emergency lowering system has been used while the platform was overloaded.

How to Clear the Platform Overload Recovery Message

Note: This message shall be cleared by a person trained and qualified on the troubleshooting and repair of this machine.

Note: Use the following chart to identify the description of each LCD screen control button used in this procedure.

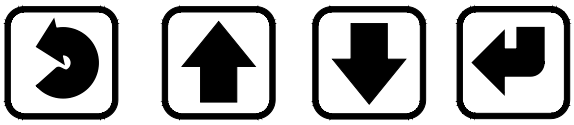

Escape Scroll up Scroll down Enter

1 Turn the key switch to the ground controls position and pull out the red Emergency Stop button to the on position at the platform controls.

2 Press and hold the ground control **scroll up** and **scroll down** buttons.

https://truckmanualshub.com/

3 Pull out the red Emergency Stop button at the ground controls.

⊙ Result: The ground control LCD display will show the following.

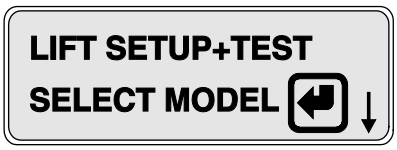

4 Press the **scroll down** button.

⊙ Result: The ground control LCD display will show the following.

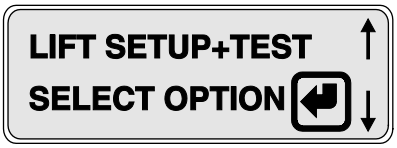

5 Press the **enter** button.

⊙ Result: The ground control LCD display will show the following.

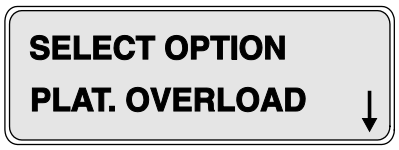

6 Press the **enter** button.

⊙ Result: The ground control LCD display will show the following.

7 Press and hold the **scroll down** button for 5 seconds.

⊙ Result: The ground control LCD display will show the following.

8 Press the **enter** button.

⊙ Result: The ground control LCD display will show the following.

9 Press the buttons in the following sequence: **(down)(down)(up)(enter)**.

Note: After each key press an asterisk (*) will appear on the second line of the LCD display.

⊙ Result: The ground control LCD display will show the following.

Note: After 3 seconds the LCD display will return to **SELECT OPTION PLAT. OVERLOAD**.

10 Push in the red Emergency stop button.

https://truckmanualshub.com/

Platform Components

10-1 Platform

How to Remove the Platform

Perform this procedure with the platform extension fully retracted and locked in position.

1 Raise the platform to approximately 3 ft / 1 m.

2 Remove the retaining fasteners securing the platform to the platform mount at the steer end of the machine.

3 Lower the platform to the stowed position.

4 Disconnect the battery pack from the machine.

⚠WARNING Electrocution/burn hazard. Contact with electrically charged circuits could result in death or serious injury. Remove all rings, watches and other jewelry.

5 Disconnect the platform controls from the control cable at the platform.

6 Remove the cover from the AC outlet. Tag and disconnect the wiring from the outlet.

⚠WARNING Electrocution/burn hazard. Contact with electrically charged circuits could result in death or serious injury. Remove all rings, watches and other jewelry.

7 Disconnect the wiring from the platform and pull the wiring free of the platform.

8 Models with air line to platform option: Disconnect the air line from the platform. Pull the air line free of the platform.

9 Support the platform with a forklift at the non-steer end. Do not apply any lifting pressure.

10 Attach a strap from the lanyard anchorage point on the platform railings to the carriage on the forklift to help support the platform.

11 **GS-1530/32 and GS-1930/32:** Lift the steer end of the platform slightly to clear the platform mount and slide the platform towards the non-steer end of the machine until the platform slide blocks at the non-steer end of the machine are visible through the access holes in the bottom of the platform.

All other models: Lift the steer end of the platform slightly to clear the platform mount and slide the platform towards the steer end of the machine until the platform slide blocks at the non-steer end of the machine are visible through the access holes in the bottom of the platform.

⚠WARNING Crushing hazard. The platform will fall if not properly supported.

12 Carefully lift the platform off of the machine and place it on a structure capable of supporting it.

Note: Take notice of the wear pad position before the platform is removed. Correct wear pad position is essential for proper platform functionality.

https://truckmanualshub.com/

10-2
Platform Extension Deck

How to Remove the Platform Extension Deck

1 Lower the platform to the stowed position.

2 Extend the platform approximately 3 ft / 1 m.

3 Remove the platform controls from the platform.

4 Support the platform extension with a forklift at the steer end of the machine. Do not apply any lifting pressure.

5 Attach a strap from the platform extension railings to the carriage on the forklift to help support the platform extension.

6 Remove the fasteners from each platform extension roller bracket assembly. Remove each assembly from the machine.

Note: Do not remove the platform roller bolt.

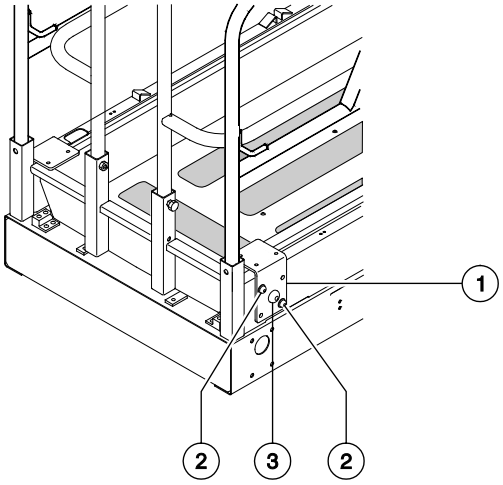

1 roller bracket assembly
2 assembly retaining fastener
3 platform roller bolt

7 Remove the platform roller wheels from the machine.

8 Carefully slide the platform extension out from the platform and place it on a structure capable of supporting it.

How to Replace the Platform Extension Deck Wear Pads

1 Remove the Platform Extension Deck. Refer to Repair Procedure, *How to Remove the Platform Extension*.

2 Drill out the rivets which hold the wear pads in place.

3 Install the new wear pads using new rivets. When installing the new rivets, make sure the rivet heads are not above the surface of the wear pad.

https://truckmanualshub.com/

Battery Charger

11-1
Battery Charger

The charger contains selectable charging profiles stored in its internal memory to charge batteries. These profiles are specific to each battery type. The charging profile must be programmed to match the specific battery type on the machine.

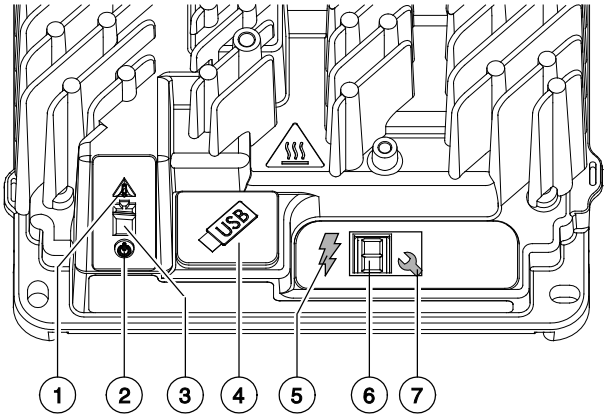

Charger status indicators

1 Error / Fault indicator
2 AC status indicator
3 Charging status
4 USB port
5 Charging indicator
6 Charger display
7 Charge profile selection button

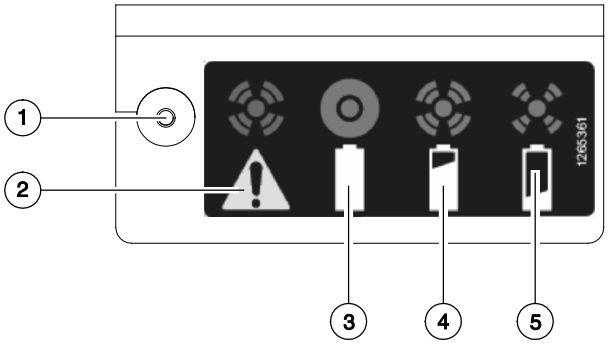

Remote charger status indicators

1 Error / Fault indicator
2 Error / Fault
3 Charge complete
4 Charging, high state of charge
5 Charging, low state of charge

https://truckmanualshub.com/

Selecting a Charge Profile

WARNING Electrocution/burn hazard. Contact with electrically charged circuits could result in death or serious injury. Remove all rings, watches and other jewelry.

1 At the ground controls, turn the key switch to the off position and push in the red Emergency Stop button to the off position.

2 Open the battery compartment.

3 Press and hold the charge profile selection button and plug the battery charger into an AC power source. Continue to hold the button until the amber error indicator is on and the green charging indicator light is flashing. Release the button.

4 Press and release the charge profile selection button to navigate to the charge profile appropriate for your machine and battery type. Refer to the chart below.

Profile	Description
P001	Scissor, GR, GRC, QS (does not include GS-4047) - Flooded lead acid batteries - Temperature compensated *
P003	Scissor, GR, GRC, QS (does not include GS-4047) - Flooded lead acid batteries - Not temperature compensated **
P007	GS-4047 - Flooded lead acid batteries - Not temperature compensated **
P043	All Scissors, GR, GRC, QS - AGM batteries - Temperature compensated *

* Temperature compensated: Battery temperature sensor has been installed on the machine.

** Not temperature compensated: Battery temperature sensor has not been installed on the machine.

5 Press and hold the charge profile selection button until the error indicator and charging indicator lights turn off and the AC status indicator light turns on to confirm selection and exit charge profile mode. Release the button.

Note: Charge profile mode will time out and exit if there is 15 seconds of inactivity, the charge profile number has been displayed three times or the AC power source had been disconnected.

6 Press and release the charge profile selection button to confirm the correct charge profile has been selected.

https://truckmanualshub.com/

This page intentionally left blank.

https://truckmanualshub.com/

Diagnostics

Observe and Obey:

- ☑ Troubleshooting and repair procedures shall be completed by a person trained and qualified on the repair of this machine
- ☑ Immediately tag and remove from service a damaged or malfunctioning machine.
- ☑ Repair any machine damage or malfunction before operating the machine.
- ☑ Unless otherwise specified, perform each repair procedure with the machine in the following configuration:
  - Machine parked on a firm, level surface
  - Platform in the stowed position
  - Key switch in the off position with the key removed
  - The red Emergency Stop button in the off position at both ground and platform controls
  - Wheels chocked
  - All external AC power supply disconnected from the machine

Before Troubleshooting:

- ☑ Read, understand and obey the safety rules and operating instructions in the appropriate operator's manual on your machine.
- ☑ Be sure that all necessary tools and test equipment are available and ready for use.
- ☑ Read each appropriate fault code thoroughly. Attempting short cuts may produce hazardous conditions.
- ☑ Be aware of the following hazards and follow generally accepted safe workshop practices.

DANGER Crushing hazard. When testing or replacing any hydraulic component, always support the structure and secure it from movement

WARNING Electrocution/burn hazard. Contact with electrically charged circuits could result in death or serious injury. Remove all rings, watches and other jewelry.

WARNING Bodily injury hazard. Spraying hydraulic oil can penetrate and burn skin. Loosen hydraulic connections very slowly to allow the oil pressure to dissipate gradually. Do not allow oil to squirt or spray.

About This Section

When a malfunction is discovered, the fault code charts in this section will help a service professional pinpoint the cause of the problem. To use this section, basic hand tools and certain pieces of test equipment are required — voltmeter, ohmmeter, pressure gauges.

https://truckmanualshub.com/

Diagnostics

Definitions

GSDS – Genie SmartLink™ Diagnostic System

ECM – Electronic Control Module

GCON – Ground Controls

PCON – Platform Controls

OIC – Operational Indicator Codes

DTC – Diagnostic Trouble Codes

GCON LCD Diagnostic Readout

H001: COILFAULT
PLAT UP1:Bat-

The diagnostic readout displays alpha numeric codes that provide information about the machine operating status and about malfunctions.

The codes listed in the Diagnostic Trouble Code Charts describe malfunctions and can aid in troubleshooting the machine by pinpointing the area or component affected.

Models are listed below each code to assist in the troubleshooting codes for a specific model.

Genie SmartLink Diagnostic System

This machine is equipped with the Genie SmartLink™ Diagnostic System (GSDS). The GSDS indicates a machine malfunction has happened by displaying Operational Indicator Codes (OIC) and Diagnostic Trouble Codes (DTC). These codes are displayed at the Platform Controls and the Ground Controls. The Ground Controls will display a brief description of the code at the LCD display as well. Refer to the GCON I/O Maps, Operational Indicator Codes (OIC) and Diagnostic Trouble Codes (DTC) in this section, to assist in troubleshooting faults.

https://truckmanualshub.com/

GCON ECM Connector Layout

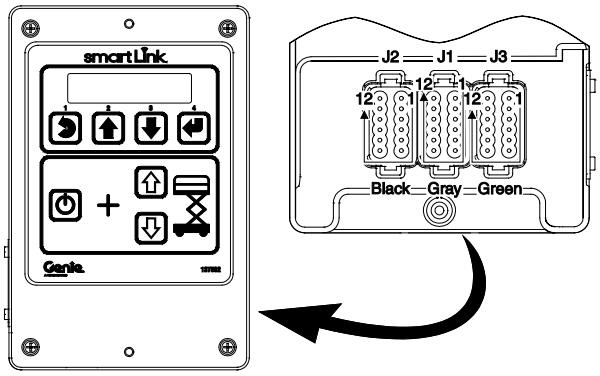

Rear of Ground Controls ECM (models without outriggers)

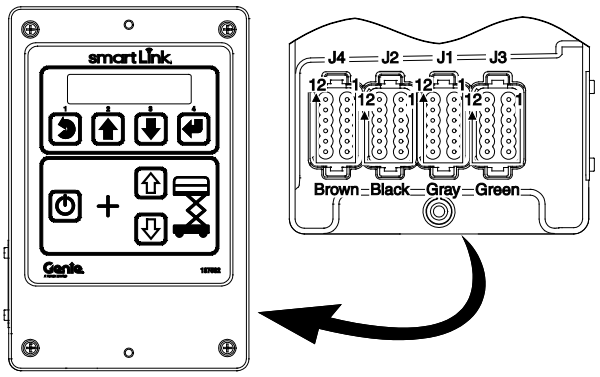

Rear of Ground Controls ECM (models with outriggers)

https://truckmanualshub.com/

Diagnostics

GCON I/O Map without Load Sense (all models except GS-3232)			
GCON Pin Number	**Circuit Function**	**I/O Type**	**Wire Gauge and Color**
J1 Connector – Gray			
J1-01	ECM Power	Power Input	14 RD
J1-02	PCON, E-Stop Power	Power Output	18 RD
J1-03	PCON, E-Stop Return	Power Input	18 WH
J1-04	Link to PCON — CANH	Data Bus	18GR
J1-05	Link to PCON — CANL	Data Bus	18 OR
J1-06	PCON — Ground	Ground Output	18 BR
J1-07	GCON — Ground	Ground Input	14 BR
J1-08	Key Switch — PCON Mode	Digital Input	18 BK
J1-09	Key Switch — GCON Mode	Digital Input	18 WH
J1-10	GCON — Emergency Mode	Digital Input	18 WH/BK
J1-11	No Circuit	N/A	N/A
J1-12	Driver Power	Power Input	14 RD
J-2 Connector – Black			
J2-01	Platform Up Coil	Digital Output	18 OR
J2-02	Platform Down Coil	Digital Output	18 OR/BK
J2-03	Steer Left Coil	Digital Output	18 BL/BK
J2-04	Steer Right Coil	Digital Output	18 BL
J2-05	Parallel Coil (GS-32 & GS-46)	Digital Output	18 RD/WH
J2-06	Drive Forward Coil	Digital Output	18 WH
J2-07	No Circuit	N/A	N/A
J2-08	Motor Controller Enable	Digital Output	18 GR/WH
J2-09	No Circuit	N/A	N/A
J2-10	Drive Reverse Coil	Digital Output	18 WH/BK
J2-11	Motor Controller Throttle	Analog Output	18 GR
J2-12	No Circuit	N/A	N/A
J-3 Connector – Green			
J3-01	No Circuit	N/A	N/A
J3-02	GCON — Alarm	Digital Output	18 BL
J3-03	Switch/Sensor Power	Digital Output	14 RD
J3-04	Automotive Horn	Digital Output	18 WH
J3-05	Pothole Limit Switch	Digital Input	18 OR/RD
J3-06	Ground	Ground Input	18 BR
J3-07	Down Limit Switch	Digital Input	18 OR
J3-08	Level Sensor	Digital Input	18 RD/BK
J3-09	Ground	Ground Input	18 BK
J3-10	Ground	Ground Input	18 BK
J3-11	No Circuit	N/A	N/A
J3-12	Load Sense — Ground	Ground Input	18 BK

https://truckmanualshub.com/

GCON I/O Map with Load Sense (all model except GS-3232)			
GCON Pin Number	**Circuit Function**	**I/O Type**	**Wire Gauge and Color**
J1 Connector – Gray			
J1-01	ECM Power	Power Input	14 RD
J1-02	PCON, E-Stop Power	Power Output	18 RD
J1-03	PCON, E-Stop Return	Power Input	18 WH
J1-04	Link to PCON — CANH	Data Bus	18GR
J1-05	Link to PCON — CANL	Data Bus	18 OR
J1-06	PCON — Ground	Ground Output	18 BR
J1-07	GCON — Ground	Ground Input	14 BR
J1-08	Key Switch — PCON Mode	Digital Input	18 BK
J1-09	Key Switch — GCON Mode	Digital Input	18 WH
J1-10	GCON — Emergency Mode	Digital Input	18 WH/BK
J1-11	No Circuit	N/A	N/A
J1-12	Driver Power	Power Input	14 RD
J-2 Connector – Black			
J2-01	Platform Up Coil	Digital Output	18 OR
J2-02	Platform Down Coil	Digital Output	18 OR/BK
J2-03	Steer Left Coil	Digital Output	18 BL/BK
J2-04	Steer Right Coil	Digital Output	18 BL
J2-05	Parallel Coil (GS-32, GS-46 & GS-47)	Digital Output	18 RD/WH
J2-06	Drive Forward Coil	Digital Output	18 WH
J2-07	Ground (GS-4047)	Ground Input	18 BR
J2-08	Motor Controller Enable	Digital Output	18 GR/WH
J2-09	Lift Pressure Selector (GS-4047)	N/A	N/A
J2-10	Drive Reverse Coil	Digital Output	18 WH/BK
J2-11	Motor Controller Throttle	Analog Output	18 GR
J2-12	No Circuit	N/A	N/A
J-3 Connector – Green			
J3-01	No Circuit	N/A	N/A
J3-02	GCON — Alarm	Digital Output	18 BL
J3-03	Switch/Sensor Power	Digital Output	14 RD
J3-04	Automotive Horn	Digital Output	18 WH
J3-05	Pothole Limit Switch	Digital Input	18 OR/RD
J3-06	Ground	Ground Input	18 BR
J3-07	Down Limit Switch	Digital Input	18 OR
J3-08	Level Sensor	Digital Input	18 RD/BK
J3-09	Platform Overload Pressure Transducer	Ground Input	18 BL/WH
J3-10	Platform Height Sensor	Ground Input	18 OR/WH
J3-11	No Circuit	N/A	N/A
J3-12	Load Sense — Ground	Ground Input	18 BK

https://truckmanualshub.com/

Diagnostics

GCON I/O Map without Load Sense (GS-3232 only)			
GCON Pin Number	**Circuit Function**	**I/O Type**	**Wire Gauge and Color**
J1 Connector – Gray			
J1-01	ECM Power	Power Input	14 RD
J1-02	PCON, E-Stop Power	Power Output	18 RD
J1-03	PCON, E-Stop Return	Power Input	18 WH
J1-04	Link to PCON — CANH	Data Bus	18GR
J1-05	Link to PCON — CANL	Data Bus	18 OR
J1-06	PCON — Ground	Ground Output	18 BR
J1-07	GCON — Ground	Ground Input	14 BR
J1-08	Key Switch — PCON Mode	Digital Input	18 BK
J1-09	Key Switch — GCON Mode	Digital Input	18 WH
J1-10	GCON — Emergency Mode	Digital Input	18 WH/BK
J1-11	No Circuit	N/A	N/A
J1-12	Driver Power	Power Input	14 RD
J-2 Connector – Black			
J2-01	Platform Up Coil	Digital Output	18 OR
J2-02	Platform Down Coil	Digital Output	18 OR/BK
J2-03	Steer Left Coil	Digital Output	18 BL/BK
J2-04	Steer Right Coil	Digital Output	18 BL
J2-05	Parallel Coil (GS-32 & GS-46)	Digital Output	18 RD/WH
J2-06	Drive Forward Coil	Digital Output	18 WH
J2-07	No Circuit	N/A	N/A
J2-08	Motor Controller Enable	Digital Output	18 GR/WH
J2-09	No Circuit	N/A	N/A
J2-10	Drive Reverse Coil	Digital Output	18 WH/BK
J2-11	Motor Controller Throttle	Analog Output	18 GR
J2-12	No Circuit	N/A	N/A

https://truckmanualshub.com/

GCON I/O Map without Load Sense (GS-3232 only) continued			
GCON Pin Number	**Circuit Function**	**I/O Type**	**Wire Gauge and Color**
J-3 Connector – Green			
J3-01	No Circuit	N/A	N/A
J3-02	GCON — Alarm	Digital Output	18 BL
J3-03	Switch/Sensor Power	Digital Output	14 RD
J3-04	Automotive Horn	Digital Output	18 WH
J3-05	Pothole Limit Switch	Digital Input	18 OR/RD
J3-06	Ground	Ground Input	18 GR
J3-07	Down Limit Switch	Digital Input	18 OR
J3-08	Level Sensor	Digital Input	18 RD/BK
J3-09	Ground	Ground Input	18 BK
J3-10	Ground	Ground Input	18 BK
J3-11	No Circuit	N/A	N/A
J3-12	Load Sense — Ground	Ground Input	18 BK
J-4 Connector – Brown			
J4-01	Left Front Pressure Transducer	Analog Input	18 WH
J4-02	Right Front Pressure Transducer	Analog Input	18 OR
J4-03	Left Rear Pressure Transducer	Analog Input	18 BL
J4-04	Right Rear Pressure Transducer	Analog Input	18 GR
J4-05	Lever Sensor — X Axis	Analog Input	18 OR
J4-06	Lever Sensor — Y Axis	Analog Input	18 BR
J4-07	Left Front Outrigger Coil	Digital Output	18 RD/WH
J4-08	Right Front Outrigger Coil	Digital Output	18 OR/WH
J4-09	Left Rear Outrigger Coil	Digital Output	18 BL/WH
J4-10	Right Rear Outrigger Coil	Digital Output	18 GR/WH
J4-11	Outrigger Extend Coil	Digital Output	18 GR
J4-12	Outrigger Retract Coil	Digital Output	18 GR/BK

https://truckmanualshub.com/

Diagnostics

GCON I/O Map with Load Sense (GS-3232 only)			
GCON Pin Number	**Circuit Function**	**I/O Type**	**Wire Gauge and Color**
J1 Connector – Gray			
J1-01	ECM Power	Power Input	14 RD
J1-02	PCON, E-Stop Power	Power Output	18 RD
J1-03	PCON, E-Stop Return	Power Input	18 WH
J1-04	Link to PCON — CANH	Data Bus	18GR
J1-05	Link to PCON — CANL	Data Bus	18 OR
J1-06	PCON — Ground	Ground Output	18 BR
J1-07	GCON — Ground	Ground Input	14 BR
J1-08	Key Switch — PCON Mode	Digital Input	18 BK
J1-09	Key Switch — GCON Mode	Digital Input	18 WH
J1-10	GCON — Emergency Mode	Digital Input	18 WH/BK
J1-11	No Circuit	N/A	N/A
J1-12	Driver Power	Power Input	14 RD
J-2 Connector – Black			
J2-01	Platform Up Coil	Digital Output	18 OR
J2-02	Platform Down Coil	Digital Output	18 OR/BK
J2-03	Steer Left Coil	Digital Output	18 BL/BK
J2-04	Steer Right Coil	Digital Output	18 BL
J2-05	Parallel Coil (GS-32, GS-46 & GS-47)	Digital Output	18 RD/WH
J2-06	Drive Forward Coil	Digital Output	18 WH
J2-07	Ground (GS-4047)	Ground Input	18 BR
J2-08	Motor Controller Enable	Digital Output	18 GR/WH
J2-09	Lift Pressure Selector (GS-4047)	N/A	N/A
J2-10	Drive Reverse Coil	Digital Output	18 WH/BK
J2-11	Motor Controller Throttle	Analog Output	18 GR
J2-12	No Circuit	N/A	N/A

https://truckmanualshub.com/

GCON I/O Map with Load Sense (GS-3232 only) continued			
GCON Pin Number	**Circuit Function**	**I/O Type**	**Wire Gauge and Color**
J-3 Connector – Green			
J3-01	No Circuit	N/A	N/A
J3-02	GCON — Alarm	Digital Output	18 BL
J3-03	Switch/Sensor Power	Digital Output	14 RD
J3-04	Automotive Horn	Digital Output	18 WH
J3-05	Pothole Limit Switch	Digital Input	18 OR/RD
J3-06	Ground	Ground Input	18 GR
J3-07	Down Limit Switch	Digital Input	18 OR
J3-08	Level Sensor	Digital Input	18 RD/BK
J3-09	Platform Overload Pressure Transducer	Ground Input	18 BL/WH
J3-10	Platform Height Sensor	Ground Input	18 OR/WH
J3-11	No Circuit	N/A	N/A
J3-12	Load Sense — Ground	Ground Input	18 BK
J-4 Connector – Brown			
J4-01	Left Front Pressure Transducer	Analog Input	18 WH
J4-02	Right Front Pressure Transducer	Analog Input	18 OR
J4-03	Left Rear Pressure Transducer	Analog Input	18 BL
J4-04	Right Rear Pressure Transducer	Analog Input	18 GR
J4-05	Lever Sensor — X Axis	Analog Input	18 OR
J4-06	Lever Sensor — Y Axis	Analog Input	18 BR
J4-07	Left Front Outrigger Coil	Digital Output	18 RD/WH
J4-08	Right Front Outrigger Coil	Digital Output	18 OR/WH
J4-09	Left Rear Outrigger Coil	Digital Output	18 BL/WH
J4-10	Right Rear Outrigger Coil	Digital Output	18 GR/WH
J4-11	Outrigger Extend Coil	Digital Output	18 GR
J4-12	Outrigger Retract Coil	Digital Output	18 GR/BK

https://truckmanualshub.com/

Diagnostics

Operational Indicator Codes (OIC)

These codes are generated by the electrical system to indicate machine operating status. During normal operation a code will appear in the platform controls LED readout if a condition such as off-level, overload cutout, chassis mode operation or pothole guards stuck occurs.These codes are not indicators of a device malfunction in the electrical system.

Code	Condition
LL	Off-Level
OL	Platform Overload (CE and Australia)
CH	Chassis Mode Operation
PHS	Pothole Guard Stuck
nd	No Drive (option)
Ld	Lifting Disabled (GS-3232 only)

Note: The **Ld** Operation Indicator Code will appear when the outriggers are not fully retracted, the machine is not auto leveled, an outrigger has lost contact with the ground or either level sensor detects the machine is no longer level. When any of the above scenarios occur, the lift function is disabled.

The lift function will also be disabled while extending or retracting the outriggers and during the outrigger auto level procedure. While performing the above operations, the **Ld** Operation Indicator Code will appear.

Diagnostic Trouble Codes (DTC)

These codes are generated by the system to indicate that a device or circuit malfunction has been detected in the electrical system.
The types of Diagnostic Trouble Codes that may occur are explained below.

Type "HXXX" – Indicate a malfunction associated with devices that control hydraulic functions in the electrical system. The "HXXX" faults are divided into short circuit battery negative, short circuit to battery positive, open circuit and generic shorts. Examples of these devices are solenoid controlled hydraulic valves and motor controller.

Type "PXXX" – Indicate a malfunction associated with power type devices in the electrical system. The "PXXX" faults are divided into short circuit to battery negative, short circuit to battery positive, open circuit and generic shorts. Examples of these devices are horns, sensor power and alarms.

Type "UXXX" – Indicate a malfunction associated with user interface devices in the electrical system. The "UXXX" faults are divided into short circuit to battery negative, short circuit to battery positive, open circuit and generic shorts. Examples of these devices are GCON up and down switches and PCON drive joystick.

Type "FXXX" – Indicate a malfunction associated with machine feedback devices in the electrical system. The "FXXX" faults are divided into short circuit to battery negative, short circuit to battery positive, open circuit and generic shorts. Examples of these devices are limit switches, height sensors and pressure transducers.

Type "CXXX" – Indicate a malfunction associated with controls devices in the electrical system. Examples of these devices are platform controls and ground controls ECM.

https://truckmanualshub.com/

Troubleshooting "HXXX" and "PXXX" Faults

The procedure below illustrates typical steps for diagnosing and fixing faults of type "HXXX" and "PXXX".

Diagnostic Chart

1	Check the faulted device for a short or open circuit.	**No Good ➔**	Replace faulted device.
	Good ↓		
2	Check short or open circuit of the harness or connector between Ground Controls and faulted device.	**No Good ➔**	Repair or replace harness an/or connector.
	Good ↓		
3	Check GCON Electronic Control Module (ECM).	**No Good ➔**	Replace ECM.

Wiring Diagram

The wiring diagram shown below illustrates how fault type "HXXX" and "PXXX" devices are typically wired. The signal of these types of devices originates at the Ground Controls and terminates at system ground.

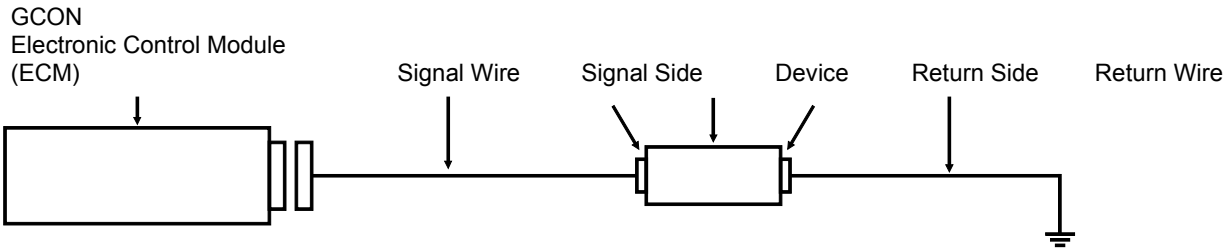

In order to successfully troubleshoot "HXXX" or "PXXX" type faults, the entire faulted out circuit must be investigated.

https://truckmanualshub.com/

Fault Inspection Procedure

Fault Inspection Procedure

1	Check the device associated with the faulted circuit		
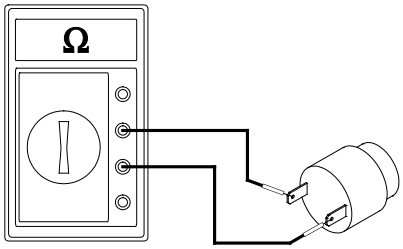	1 Disconnect the faulted device connector. 2 Using a multi-meter, measure resistance between the two terminals of the faulted device. 3 Resistance should be as follows. **Device** — **Typical Resistance** Solenoid Valve, Drive — 27.2 Ω Solenoid Valve, Steer — 19 Ω Solenoid Valve, Platform Up — 25 Ω Solenoid Valve, Platform Down — 6.25 Ω GCON and PCON Alarm — >1M Ω Automotive Horn — 1.0 Ω Motor Controller – Enable — 5.7k Ω Motor Controller – Throttle — 5.7k Ω Contactor Coil — 47 Ω		
OK	**Go to step 2**	**No Good**	**Replace faulted device**

2	Check the harness between the ground controls and the faulted device		
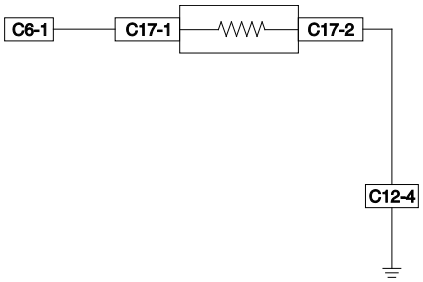	1 Disconnect the GCON ECM connectors, J1, J2 and J3. 2 Disconnect the faulted device connector. 3 Check the continuity between the GCON ECM connector and the signal side of the faulted device. ⊙ Result: Resistance should be close to 0 Ω 4 Check the continuity between the return side of faulted device and system ground. ⊙ Result: Resistance should be close to 0 Ω 5 Check resistance between return side and signal side of the harness plug of faulted device. ⊙ Result: Resistance should be 1M Ω or higher.		
OK	**Go to step 3**	**No Good**	**Replace or repair harness**

https://truckmanualshub.com/

Fault Inspection Procedure

3	Check the GCON ECM
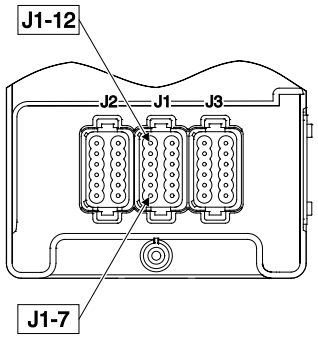	1 Disconnect the GCON ECM connectors, J1, J2 and J3. 2 For short to B- type faults, measure resistance between pins J1-7 (ground) and the GCON pin associated with the fault code. Refer to the GCON I/O Map in this section to identify the faulted out circuit pin. 3 Short to ground resistance should be greater than 5k Ω. 4 For short to B+ type faults, measure resistance between pins J1-12 (driver power) and the GCON pin associated with the fault code. Refer to the GCON I/O Map in this section to identify the faulted out circuit pin. 5 Short to power resistance should be greater than 50k Ω.
	No Good — **Replace GCON ECM**

https://truckmanualshub.com/

Type "HXXX" Faults

Type "HXXX" Faults

DTC Number	Message on GCON LCD	Description	Possible Causes	Failure Mode
H001: GS30, GS32, GS46 & GS47	H001:COILFAULT PLAT UP1:BAT-	Short circuit of the platform up #1 circuit to battery negative.	• Short circuit in platform up #1 harness. • Platform up #1 coil short circuit. • GCON ECM.	Platform up function inhibited.
H002: GS30, GS32, GS46 & GS47	H002:COILFAULT PLAT UP1:OPEN	Open circuit in the platform up #1 circuit.	• Short circuit in platform up #1 harness. • Platform up #1 coil open circuit. • GCON ECM.	Platform up function inhibited.
H003: GS30, GS32, GS46 & GS47	H003:COILFAULT PLAT UP1:BAT+	Short circuit of the platform up #1 circuit to battery positive.	• Short circuit in platform up #1 harness. • Platform up #1 coil short circuit. • GCON ECM.	All functions inhibited except platform down.
H009: GS30, GS32, GS46 & GS47	H009:COILFAULT PLAT DOWN1:BAT+	Short circuit of the platform down #1 circuit to battery positive.	• Short circuit in platform down #1 harness. • Platform down #1 coil short circuit. • GCON ECM.	All functions inhibited.
H013: GS30, GS32, GS46 & GS47	H013:COILFAULT DRIVE FWD1:BAT-	Short circuit of the drive forward #1 circuit to battery negative.	• Short circuit in drive forward #1 harness. • Drive forward #1 coil short circuit. • GCON ECM.	Drive forward function inhibited.
H014: GS30, GS32, GS46 & GS47	H014:COILFAULT DRIVE FWD1:OPEN	Open circuit in the drive forward #1 circuit.	• Open circuit in drive forward #1 harness. • Drive forward #1 coil open circuit. • GCON ECM.	Drive forward function inhibited.
H015: GS30, GS32, GS46 & GS47	H015:COILFAULT DRIVE FWD1:BAT+	Short circuit of the drive forward #1 circuit to battery positive.	• Short circuit in drive forward #1 harness. • Drive forward #1 coil short circuit. • GCON ECM.	All functions inhibited except platform down.
H019: GS30, GS32, GS46 & GS47	H019:COILFAULT DRIVE REV1:BAT-	Short circuit of the drive reverse #1 circuit to battery negative.	• Short circuit in drive reverse #1 harness. • Drive reverse #1 coil short circuit. • GCON ECM.	Drive reverse function inhibited.
H020: GS30, GS32, GS46 & GS47	H020:COILFAULT DRIVE REV1:OPEN	Open circuit in the drive reverse #1 circuit.	• Open circuit in drive reverse #1 harness. • Drive reverse #1 coil open circuit. • GCON ECM.	Drive reverse function inhibited.
H021: GS30, GS32, GS46 & GS47	H021:COILFAULT DRIVE REV1:BAT+	Short circuit of the drive reverse #1 circuit to battery positive.	• Short circuit in drive reverse #1 harness. • Drive reverse #1 coil short circuit. • GCON ECM.	All functions inhibited except platform down.
H027: GS30, GS32, GS46 & GS47	H027:COILFAULT DRIVE STEER RIGHT:BAT+	Short circuit of the steer right circuit to battery positive.	• Short circuit in steer right harness. • Steer right coil short circuit. • GCON ECM.	All functions inhibited except platform down.
H030: GS30, GS32, GS46 & GS47	H030:COILFAULT DRIVE STEER LEFT:BAT+	Short circuit of the steer left circuit to battery positive.	• Short circuit in steer left harness. • Steer left coil short circuit. • GCON ECM.	All functions inhibited except platform down.
H033: GS30, GS32, GS46 & GS47	H033:COILFAULT HI/LO SPEED:BAT+	Short circuit of the hi/lo speed coil to battery positive.	• Short circuit in Hi/Lo speed coil harness. • Hi/Lo speed coil short circuit. • GCON ECM.	Hi/Lo speed coil disabled. Machine will operate in low speed mode.

https://truckmanualshub.com/

Type "HXXX" Faults, continued

DTC Number	Message on GCON LCD	Description	Possible Causes	Failure Mode
H049: GS-3232	H049:COILFAULT O/R EXTEND:BAT-	Short circuit of the outrigger extend coil to battery negative.	• Short circuit in outrigger extend coil harness. • Outrigger extend coil short circuit. • GCON ECM.	Only outrigger extend function disabled.
H050: GS-3232	H050:COILFAULT O/R EXTEND:OPEN	Open circuit in the outrigger extend coil circuit.	• Short circuit in outrigger extend coil harness. • Outrigger extend coil open circuit. • GCON ECM.	Only outrigger extend function disabled.
H051: GS-3232	H051:COILFAULT O/R EXTEND:BAT+	Short circuit of the outrigger extend coil to battery positive.	• Short circuit in outrigger extend coil harness. • Outrigger extend coil short circuit. • GCON ECM.	All functions inhibited except platform down.
H052: GS-3232	H052:COILFAULT O/R RETRACT:BAT-	Short circuit of the outrigger retract coil to battery negative.	• Short circuit in outrigger retract coil harness. • Outrigger retract coil short circuit. • GCON ECM.	Only outrigger retract function disabled.
H053: GS-3232	H053:COILFAULT O/R RETRACT:OPEN	Open circuit in the outrigger retract coil circuit.	• Short circuit in outrigger retract coil harness. • Outrigger retract coil open circuit. • GCON ECM.	Only outrigger retract function disabled.
H054: GS-3232	H054:COILFAULT O/R RETRACT:BAT+	Short circuit of the outrigger retract coil to battery positive.	• Short circuit in outrigger retract coil harness. • Outrigger retract coil short circuit. • GCON ECM.	All functions inhibited except platform down.
H057: GS-3232	H057:COILFAULT LF RIGGER:BAT+	Short circuit of the left front outrigger coil to battery positive.	• Short circuit in left front outrigger coil harness. • Left front outrigger coil short circuit. • GCON ECM.	All functions inhibited except platform down.
H060: GS-3232	H060:COILFAULT LR RIGGER:BAT+	Short circuit of the left rear outrigger coil to battery positive.	• Short circuit in left rear outrigger coil harness. • Left rear outrigger coil short circuit. • GCON ECM.	All functions inhibited except platform down.
H063: GS-3232	H063:COILFAULT RF RIGGER:BAT+	Short circuit of the right front outrigger coil to battery positive.	• Short circuit in right front outrigger coil harness. • Right front outrigger coil short circuit. • GCON ECM.	All functions inhibited except platform down.
H066: GS-3232	H066:COILFAULT RR RIGGER:BAT+	Short circuit of the right rear outrigger coil to battery positive.	• Short circuit in right rear outrigger coil harness. • Right rear outrigger coil short circuit. • GCON ECM.	All functions inhibited except platform down.
H067: GS30, GS32, GS46 & GS47	H067:FAULT MC ENABLE:BAT-	Short circuit of the motor controller circuit to battery negative.	• Short circuit in motor controller enable wire. • Motor Controller. • Contactor coil shorted to battery negative. • GCON ECM.	All functions inhibited except platform down.
H069: GS30, GS32, GS46 & GS47	H069:FAULT MC ENABLE:BAT+	Short circuit of the motor controller circuit to battery positive.	• Short circuit in motor controller enable wire. • Motor Controller. • Contactor Coil. • GCON ECM.	All functions inhibited except platform down.
H070: GS30, GS32, GS46 & GS47	H070:FAULT MC THROTTLE:BAT-	Short circuit of the motor controller throttle circuit to battery negative.	• Short circuit in motor controller throttle wire. • Motor Controller. • GCON ECM.	All functions inhibited except platform down.

https://truckmanualshub.com/

Type "HXXX" Faults

Type "HXXX" Faults, continued

DTC Number	Message on GCON LCD	Description	Possible Causes	Failure Mode
H072: GS30, GS32, GS46 & GS47	H072:FAULT MC THROTTLE:BAT+	Short circuit of the motor controller throttle circuit to battery positive.	• Short circuit in motor controller throttle wire. • Motor Controller. • GCON ECM.	All functions inhibited except platform down.
H074: GS-3232	H074:COILFAULT LF RIGGER	Short circuit of the left front outrigger circuit to battery positive/negative or open circuit.	• Short or open circuit in left front outrigger harness. • Left front outrigger coil short or open circuit. • GCON ECM.	Left front outrigger function inhibited.
H075: GS-3232	H075:COILFAULT LR RIGGER	Short circuit of the left rear outrigger circuit to battery positive/negative or open circuit.	• Short or open circuit in left rear outrigger harness. • Left rear outrigger coil short or open circuit. • GCON ECM.	Left rear outrigger function inhibited.
H076: GS-3232	H076:COILFAULT RF RIGGER	Short circuit of the right front outrigger circuit to battery positive/negative or open circuit.	• Short or open circuit in right front outrigger harness. • Right front outrigger coil short or open circuit. • GCON ECM.	Right front outrigger function inhibited.
H077: GS-3232	H077:COILFAULT RR RIGGER	Short circuit of the right rear outrigger circuit to battery positive/negative or open circuit.	• Short or open circuit in right rear outrigger harness. • Right rear outrigger coil short or open circuit. • GCON ECM.	Right rear outrigger function inhibited.
H078: GS30, GS32, GS46 & GS47	H078:COILFAULT PLAT DOWN1	Short circuit of the platform down #1 circuit to battery positive/negative or open circuit.	• Short or open circuit in platform down #1 harness. • Platform down #1 coil short or open circuit. • GCON ECM.	Platform down function inhibited.
H079: GS32, GS46 & GS47	H079:COILFAULT HI/LO SPEED	Short circuit of the HI/LO speed circuit to battery positive/negative or open circuit.	• Short circuit in HI/LO speed harness. • HI/LO speed coil short or open circuit. • GCON ECM.	Hi/Lo speed coil disabled. Machine will operate in high speed mode if open circuit or short with battery negative. Machine will operate in low speed mode if short with battery positive.
H080: GS30, GS32, GS46 & GS47	H080:COILFAULT STEER LEFT	Short circuit of the steer left circuit to battery negative or open circuit.	• Short or open circuit in steer left harness. • Steer left coil short or open circuit. • GCON ECM.	Steer left function inhibited.
H081: GS30, GS32, GS46 & GS47	H081:COILFAULT STEER RIGHT	Short circuit of the steer right circuit to battery negative or open circuit.	• Short or open circuit in steer right harness. • Steer right coil short or open circuit. • GCON ECM.	Steer right function inhibited.
H102: GS-4047	H102:COILFAULT RELIEF VALVE:BAT+	Short circuit of the relief valve circuit to battery positive.	• Short circuit in relief valve harness. • Relief valve coil short circuit. • GCON ECM.	All functions inhibited except platform down while above limit switch.
H103: GS-4047	H103:COILFAULT RELIEF VALVE:BAT-	Short circuit of the relief valve circuit to battery negative.	• Short circuit in relief valve harness. • Relief valve coil short circuit. • GCON ECM.	All functions inhibited except platform down while above limit switch.
H104: GS-4047	H104:COILFAULT RELIEF VALVE:OPEN	Relief valve circuit open.	• Open circuit in relief valve harness. • Relief valve coil open circuit. • GCON ECM.	All functions inhibited except platform down while above limit switch.

https://truckmanualshub.com/

Type "HXXX" Faults, continued

DTC Number	Message on GCON LCD	Description	Possible Causes	Failure Mode
H106: GS-2646AV	H106:COILFAULT DECK EXTEND:BAT-	Short circuit of the platform extend circuit to battery negative.	• Short circuit in PED harness. • PED extend valve coil short circuit. • GCON ECM.	All functions inhibited.
H107: GS-2646AV	H107:COILFAULT DECK EXTEND:OPEN	Open circuit in the platform extend circuit.	• Open circuit in PED harness. • PED extend valve coil open circuit. • GCON ECM.	All functions inhibited.
H108: GS-2646AV	H108:COILFAULT DECK EXTEND:BAT+	Short circuit of the platform extend circuit to battery positive.	• Short circuit in PED harness. • PED extend valve coil short circuit. • GCON ECM.	All functions inhibited.
H109: GS-2646AV	H109:COILFAULT DECK RETRACT:BAT-	Short circuit of the platform retract circuit to battery negative.	• Short circuit in PED harness. • PED retract valve coil short circuit. • GCON ECM.	All functions inhibited.
H110: GS-2646AV	H110:COILFAULT DECK RETRACT:OPEN	Open circuit in the platform retract circuit.	• Open circuit in PED harness. • PED retract valve coil open circuit. • GCON ECM.	All functions inhibited.
H111: GS-2646AV	H111:COILFAULT DECK RETRACT:BAT+	Short circuit of the platform retract circuit to battery positive.	• Short circuit in PED harness. • PED retract valve coil short circuit. • GCON ECM.	All functions inhibited.
H114: GS-2646AV	H114:COILFAULT DECK ENABLE:BAT+	Short circuit of the platform enable circuit to battery positive.	• Short circuit in PED harness. • PED enable valve coil short circuit. • GCON ECM.	All functions inhibited.
H115: GS-2646AV	H115:COILFAULT DECK ENABLE	Short circuit of the platform enable circuit.	• Short circuit in PED harness. • GCON ECM.	All functions inhibited.

https://truckmanualshub.com/

Type "PXXX" Faults

Type "PXXX" Faults

DTC Number	Message on GCON LCD	Description	Possible Causes	Failure Mode
P001: GS30, GS32, GS46 & GS47	P001:PWR FAULT SW PWR1:BAT-	Short circuit of the switched power #1 circuit to battery negative.	• Short circuit in switched power #1, down limit switch, pothole limit switch, digital tilt switch harness. • GCON ECM.	All functions inhibited.
P003: GS30, GS32, GS46 & GS47	P003:PWR FAULT SW PWR1:BAT+	Short circuit of the switched power #1 circuit to battery positive.	• Short circuit in switched power #1, down limit switch, pothole limit switch, digital tilt switch harness. • GCON ECM.	All functions inhibited.
P004: GS30, GS32, GS46 & GS47	P004:DEVICEFAULT HORN:BAT-	Short circuit of the automotive horn circuit to battery negative.	• Short circuit in automotive horn harness. • Automotive horn short circuit. • GCON ECM.	Automotive horn inhibited.
P005: GS30, GS32, GS46 & GS47	P005:DEVICEFAULT HORN:OPEN	Open circuit of the automotive horn circuit.	• Open circuit in automotive horn harness. • Automotive horn open circuit. • GCON ECM.	Automotive horn inhibited.
P006: GS30, GS32, GS46 & GS47	P006:DEVICEFAULT HORN:BAT+	Short circuit of the automotive horn circuit to battery positive.	• Short circuit in automotive horn harness. • Automotive horn short circuit. • GCON ECM.	Automotive horn inhibited.
P007: GS30, GS32, GS46 & GS47	P007:DEVICEFAULT GCON ALARM:BAT-	Short circuit of the GCON alarm circuit to battery negative.	• Short circuit in GCON alarm harness. • GCON alarm short circuit. • GCON ECM.	GCON alram inhibited.
P009: GS30, GS32, GS46 & GS47	P009:DEVICEFAULT GCON ALARM:BAT+	Short circuit of the GCON alarm circuit to battery positive.	• Short circuit in GCON alarm harness. • GCON alarm short circuit. • GCON ECM.	GCON alram inhibited.
P013: GS30, GS32, GS46 & GS47	P013:PWR FAULT PCON PWRET:BAT-	Short circuit of the PCON power return circuit to battery negative.	• Short circuit in PCON power return harness. • GCON ECM.	All functions inhibited.
P015: GS30, GS32, GS46 & GS47	P015:PWR FAULT PCON PWRET:BAT+	Short circuit of the PCON power return circuit to battery positive.	• Short circuit in PCON power return harness. • GCON ECM.	All functions inhibited.
P018: GS30, GS32, GS46 & GS47	018:PWR FAULT PCON POWER:BAT-	Short circuit of the PCON power circuit to battery negative.	• Short circuit in PCON power harness. • GCON ECM.	All functions inhibited.
P019: GS30, GS32, GS46 & GS47	018:PWR FAULT PCON POWER:BAT+	Short circuit of the PCON power circuit to battery positive.	• Short circuit in PCON power harness. • GCON ECM.	All functions inhibited.

https://truckmanualshub.com/

Type "UXXX" Faults

DTC Number	Message on GCON LCD	Description	Possible Causes	Failure Mode
U001: GS30, GS32, GS46 & GS47	U001:SWITCHFAULT GCON MAIN FTN EN	Short circuit of the GCON main function enable switch at system startup.	• Short circuit of the GCON main function enable switch. • GCON ECM.	All GCON functions inhibited.
U002: GS30, GS32, GS46 & GS47	U002:SWITCHFAULT GCON PLAT UP	Short circuit of the GCON up directional switch at system startup.	• Short circuit of the GCON up directional switch. • GCON ECM.	All GCON functions inhibited except platform down.
U003: GS30, GS32, GS46 & GS47	U003:SWITCHFAULT GCON PLAT DOWN	Short circuit of the GCON down directional switch at system startup.	• Short circuit of the GCON down directional switch. • GCON ECM.	All GCON functions inhibited except platform up.
U004: GS30, GS32, GS46 & GS47	U004:SWITCHFAULT GCON LCD UP	Short circuit of the GCON LCD scroll up switch at system startup.	• Short circuit of the GCON LCD scroll up switch. • GCON ECM.	All GCON LCD menu functions inhibited.
U005: GS30, GS32, GS46 & GS47	U005:SWITCHFAULT GCON LCD DOWN	Short circuit of the GCON LCD scroll down switch at system startup.	• Short circuit of the GCON LCD scroll down switch. • GCON ECM.	All GCON LCD menu functions inhibited.
U006: GS30, GS32, GS46 & GS47	U006:SWITCHFAULT GCON LCD ENTER	Short circuit of the GCON LCD enter switch at system startup.	• Short circuit of the GCON LCD enter switch. • GCON ECM.	All GCON LCD menu functions inhibited.
U007: GS30, GS32, GS46 & GS47	U007:SWITCHFAULT GCON LCD ESCAPE	Short circuit of the GCON LCD escape switch at system startup.	• Short circuit of the GCON LCD escape switch. • GCON ECM.	All GCON LCD menu functions inhibited.
U014: GS30, GS32, GS46 & GS47	U014:SWITCHFAULT PCON DRIVE EN	Short circuit of the PCON drive enable switch at system startup.	• Short circuit of the PCON drive enable switch. • GCON ECM.	All PCON drive and steer functions inhibited.
U015: GS30, GS32, GS46 & GS47	U015:SWITCHFAULT PCON STEER LEFT	Short circuit of the PCON steer left switch at system startup.	• Short circuit of the PCON steer left switch. • GCON ECM.	All PCON drive and steer functions inhibited.
U016: GS30, GS32, GS46 & GS47	U016:SWITCHFAULT PCON STEER RIGHT	Short circuit of the PCON steer right switch at system startup.	• Short circuit of the PCON steer right switch. • GCON ECM.	All PCON drive and steer functions inhibited.
U017: GS30, GS32, GS46 & GS47	U017:SWITCHFAULT PCON HORN	Short circuit of the PCON horn switch at system startup.	• Short circuit of the PCON horn switch. • GCON ECM.	PCON horn switch function inhibited.
U018: GS30, GS32, GS46 & GS47	U018:SWITCHFAULT PCON LO DRIV SPD	Short circuit of the PCON low drive speed switch at system startup.	• Short circuit of the PCON low drive speed switch. • GCON ECM.	The machine is limited to low drive speed.
U019: GS30, GS32, GS46 & GS47	U019:SWITCHFAULT PCON LO LIFT SPD	Short circuit of the PCON low lift speed switch at system startup.	• Short circuit of the PCON low lift speed switch. • GCON ECM.	PCON platform up and down functions inhibited.

https://truckmanualshub.com/

Type "UXXX" Faults

Type "UXXX" Faults, continued

DTC Number	Message on GCON LCD	Description	Possible Causes	Failure Mode
U020: GS30, GS32, GS46 & GS47	U020:SWITCHFAULT PCON HI LIFT SPD	Short circuit of the PCON high lift speed switch at system startup.	• Short circuit of the PCON hi lift speed switch. • GCON ECM.	PCON platform up and down functions inhibited.
U021: GS30, GS32, GS46 & GS47	U021:SWITCHFAULT PCON UP	Short circuit of the PCON up directional switch at system startup.	• Short circuit of the PCON up directional switch. • GCON ECM.	PCON platform up function inhibited.
U022: GS30, GS32, GS46 & GS47	U022:SWITCHFAULT PCON DOWN	Short circuit of the PCON down directional switch at system startup.	• Short circuit of the PCON down directional switch. • GCON ECM.	PCON platform down functions inhibited.
U023: GS-3232	U023:SWITCHFAULT PCON O/R ENABLE	Short circuit of the PCON outrigger enable switch at system startup.	• Short circuit of the PCON outrigger enable switch. • GCON ECM.	All outrigger functions inhibited.
U033: GS30, GS32, GS46 & GS47	U033:JSTICKFAULT OUT OF CAL RANGE	PCON drive joystick signal is outside acceptable calibration range at system startup.	• PCON drive joystick is not in neutral position at startup. • PCON joystick. • GCON ECM.	All PCON drive and steer functions inhibited.
U034: GS30, GS32, GS46 & GS47	U034:JSTICKFAULT OUT OF RANGE:HI	Short circuit of the PCON drive joystick signal to battery positive at system startup.	• Short circuit of the PCON drive joystick signal circuit. • PCON joystick. • GCON ECM.	All PCON drive and steer functions inhibited.
U035: GS30, GS32, GS46 & GS47	U035:JSTICKFAULT OUT OF RANGE:LO	Short circuit of the PCON drive joystick signal to battery negative at system startup.	• Short circuit of the PCON drive joystick signal circuit. • PCON joystick. • GCON ECM.	All PCON drive and steer functions inhibited.
U036: GS30, GS32, GS46 & GS47	U036:SWITCHFAULT GCON + PCON:ON	Mis-wiring or short circuit of GCON key switch.	• Short circuit of the PCON drive enable switch. • GCON ECM.	All functions inhibited.
U037: GS30, GS32, GS46 & GS47	U037:SWITCHFAULT FOOTSW PRESSED	Foot switch pressed at machine startup.	• Short circuit in the foot switch harness. • Foot switch. • GCON ECM.	All functions inhibited.
U038: GS30, GS32, GS46 & GS47	U038:SWITCHFAULT FOOTSWITCH:BAT+	Mis-wiring or short circuit of foot switch to battery positive.	• Short circuit in the foot switch harness. • Foot switch. • GCON ECM.	All functions inhibited.
U039: GS30, GS32, GS46 & GS47	U039:SWITCHFAULT FOOTSW:OPEN/BAT-	Mis-wiring, open or short circuit of foot switch to battery negative.	• Short circuit in the foot switch harness. • Foot switch. • GCON ECM.	All functions inhibited.
U040: GS30, GS32, GS46 & GS47 (GS-3232 excluded)	U040:SWITCHFAULT FOOTSW:TIMEOUT	PCON deck switch pressed at machine startup.	• Short circuit in the foot switch harness. • Foot switch. • GCON ECM.	All functions inhibited.

https://truckmanualshub.com/

Type "UXXX" Faults, continued

DTC Number	Message on GCON LCD	Description	Possible Causes	Failure Mode
U041: GS30, GS32, GS46 & GS47	U041:SWITCHFAULT GCON DECK ENABLE	GCON deck enable switch stuck closed, or depressed at system startup.	• GCON deck enable switch stuck closed. • GCON deck enable switch depressed at system startup. • GCON ECM.	All functions inhibited.
U042: GS30, GS32, GS46 & GS47	U042:SWITCHFAULT PCON DRIVE MODE	PCON drive mode switch stuck closed, or depressed at system startup.	• PCON drive mode switch stuck closed. • PCON drive mode switch depressed at system startup. • PCON ECM.	Drive functions inhibited.
U043: GS-3232	U043:SWITCHFAULT PCON OR MODE	PCON outrigger mode switch stuck closed, or depressed at system startup.	• PCON outrigger mode switch stuck closed. • PCON outrigger mode switch depressed at system startup. • PCON ECM.	Outrigger extend/retract functions inhibited.
U045: GS30, GS32, GS46 & GS47	U045:SWITCHFAULT PCON FUNCTION EN	PCON function enable switch stuck closed, or depressed at system startup.	• PCON function enable switch stuck closed. • PCON function enable switch depressed at system startup. • PCON ECM.	All drive and steer functions inhibited.
U046: GS30, GS32, GS46 & GS47	U046:SWITCHFAULT PCON LIFT MODE	PCON Lift mode switch stuck closed, or depressed at system startup.	• PCON lift mode switch stuck closed. • PCON lift mode switch depressed at system startup. • PCON ECM.	All functions operate except platform up/down.

https://truckmanualshub.com/

Type "FXXX" Faults

Type "FXXX" Faults

DTC Number	Message on GCON LCD	Description	Possible Causes	Failure Mode
F001: GS-3232	F001:SWITCHFAULT UP LIMIT1:BAT+	Short circuit of the up limit #1 switch at system startup.	• Short circuit of the up limit switch circuit. • Up limit #1 switch short circuit. • GCON ECM.	Platform up function inhibited.
F003: GS30, GS32, GS46 & GS47	F003:SWITCHFAULT DOWN LIMIT1:BAT+	Short circuit of the down limit #1 switch at system startup.	• Short circuit of the down limit switch circuit. • Down limit #1 switch short circuit. • GCON ECM.	All functions inhibited except platform down.
F005: GS30, GS32, GS46 & GS47	F005:SWITCHFAULT POTHOLE:BAT+	Short circuit of the pothole limit #1 switch at system startup.	• Short circuit of the pothole switch circuit. • Pothole limit #1 switch short circuit. • GCON ECM.	All functions inhibited except platform down as long as machine is in the elevated position. If machine is in stowed position, all functionality is resumed.
F007: GS30, GS32, GS46 & GS47	F007:SWITCHFAULT CHASSISTILT:BAT+	Short circuit of the chassis digital tilt switch at system startup.	• Short circuit of the chassis digital tilt switch circuit. • Chassis digital tilt switch short circuit. • GCON ECM.	All functions inhibited except platform down as long as machine is in the elevated position. If machine is in stowed position, all functionality is resumed.
F008: GS30, GS32, GS46 & GS47	F008:SENSORFAULT OVLD XDUCER:BAT+	Short circuit of the Platform Overload Transducer circuit to battery positive.	• Short circuit in the transducer circuit. • Faulty pressure transducer. • GCON ECM.	All functions inhibited.
F009: GS30, GS32, GS46 & GS47	F009:SENSORFAULT OVLD XDUCER:BAT-	Short circuit of the Platform Overload Transducer circuit to battery negative.	• Short circuit in the transducer circuit. • Faulty pressure transducer. • GCON ECM.	All functions inhibited.
F010: GS30, GS32, GS46 & GS47	F010:SENSORFAULT PLAT HEIGHT:BAT+	Short circuit of the Platform Height Sensor circuit to battery positive.	• Short circuit in the platform height circuit. • Faulty platform height sensor. • GCON ECM.	All functions inhibited except platform down as long as machine is in the elevated position. If machine is in stowed position, all functionality is resumed.
F011: GS30, GS32, GS46 & GS47	F011:SENSORFAULT PLAT HEIGHT:BAT-	Short circuit of the Platform Height Sensor circuit to battery negative.	• Short circuit in the platform height circuit. • Faulty platform height sensor. • GCON ECM.	All functions inhibited except platform down as long as machine is in the elevated position. If machine is in stowed position, all functionality is resumed.

https://truckmanualshub.com/

Type "FXXX" Faults, continued

DTC Number	Message on GCON LCD	Description	Possible Causes	Failure Mode
F012: GS-3232	F012:SENSORFAULT LEVEL PITCH:BAT+	Short circuit of the Level Pitch Sensor circuit to battery positive.	• Short circuit in the level pitch sensor circuit. • Faulty level sensor. • GCON ECM.	All functions inhibited.
F013: GS-3232	F013:SENSORFAULT LEVEL PITCH:BAT-	Short circuit of the Level Pitch Sensor circuit to battery negative.	• Short circuit in the level pitch sensor circuit. • Faulty level sensor. • GCON ECM.	All functions inhibited.
F014: GS-3232	F014:SENSORFAULT LEVEL ROLL:BAT+	Short circuit of the Level Roll Sensor circuit to battery positive.	• Short circuit in the level roll sensor circuit. • Faulty level sensor. • GCON ECM.	All functions inhibited.
F015: GS-3232	F015:SENSORFAULT LEVEL ROLL:BAT-	Short circuit of the Level Roll Sensor circuit to battery negative.	• Short circuit in the level roll sensor circuit. • Faulty level sensor. • GCON ECM.	All functions inhibited.
F016: GS-3232	F016:SENSORFAULT LF RIGGER:BAT+	Short circuit of the Left Front Outrigger Sensor circuit to battery positive.	• Short circuit in the left front outrigger sensor circuit. • Faulty pressure transducer. • GCON ECM.	Left front outrigger inhibited if outrigger extend is activated. Outrigger can still be retracted.
F017: GS-3232	F017:SENSORFAULT LF RIGGER:BAT-	Short circuit of the Left Front Outrigger Sensor circuit to battery negative.	• Short circuit in the left front outrigger sensor circuit. • Faulty pressure transducer. • GCON ECM.	Left front outrigger inhibited if outrigger extend is activated. Outrigger can still be retracted.
F018: GS-3232	F018:SENSORFAULT RF RIGGER:BAT+	Short circuit of the Right Front Outrigger Sensor circuit to battery positive.	• Short circuit in the right front outrigger sensor circuit. • Faulty pressure transducer. • GCON ECM.	Right front outrigger inhibited if outrigger extend is activated. Outrigger can still be retracted.
F019: GS-3232	F019:SENSORFAULT RF RIGGER:BAT-	Short circuit of the Right Front Outrigger Sensor circuit to battery negative.	• Short circuit in the right front outrigger sensor circuit. • Faulty pressure transducer. • GCON ECM.	Right front outrigger inhibited if outrigger extend is activated. Outrigger can still be retracted.
F020: GS-3232	F020:SENSORFAULT LR RIGGER:BAT+	Short circuit of the Left Rear Outrigger Sensor circuit to battery positive.	• Short circuit in the left rear outrigger sensor circuit. • Faulty pressure transducer. • GCON ECM.	Left rear outrigger inhibited if outrigger extend is activated. Outrigger can still be retracted.
F021: GS-3232	F021:SENSORFAULT LR RIGGER:BAT-	Short circuit of the Left Rear Outrigger Sensor circuit to battery negative.	• Short circuit in the left rear outrigger sensor circuit. • Faulty pressure transducer. • GCON ECM.	Left rear outrigger inhibited if outrigger extend is activated. Outrigger can still be retracted.
F022: GS-3232	F022:SENSORFAULT RR RIGGER:BAT+	Short circuit of the Right Rear Outrigger Sensor circuit to battery positive.	• Short circuit in the right rear outrigger sensor circuit. • Faulty pressure transducer. • GCON ECM.	Right rear outrigger inhibited if outrigger extend is activated. Outrigger can still be retracted.

https://truckmanualshub.com/

Type "FXXX" Faults

Type "FXXX" Faults, continued

DTC Number	Message on GCON LCD	Description	Possible Causes	Failure Mode
F023: GS-3232	F023:SENSORFAULT RR RIGGER:BAT-	Short circuit of the Right Rear Outrigger Sensor circuit to battery negative.	• Short circuit in the right rear outrigger sensor circuit. • Faulty pressure transducer. • GCON ECM.	Right rear outrigger inhibited if outrigger extend is activated. Outrigger can still be retracted.
F034: GS30, GS32, GS46 & GS47	F034:SENSORFAULT OVLD:PLAT HEIGHT	Height Sensor settings are not calibrated correctly.	• Height sensor needs calibration for stowed height and maximum height settings. • GCON or PCON ECM.	All functions inhibited.
F035: GS30, GS32, GS46 & GS47	F035:SENSORFAULT OVLD RANGE:LOW	Height Sensor setting is lower than calibrated stowed height.	• Height sensor not calibrated for stowed height correctly. • GCON or PCON ECM.	All functions inhibited.
F036: GS30, GS32, GS46 & GS47	F036:SENSORFAULT OVLD RANGE:HI	Height Sensor setting is higher than calibrated maximum height.	• Height sensor not calibrated for maximum height correctly. • GCON or PCON ECM.	All functions inhibited.
F072: GS-2646AV	F072:SENSORFAULT FUNCTION CUT B+	Function Cutout sensor B+ fault.	• Faulty extension deck limit switch. • Faulty gate proximity switch. • GCON ECM.	All functions inhibited.
F073: GS-2646AV	F073:SENSORFAULT DECK SENSOR B+	Power Deck sensor B+ fault.	• Short circuit in deck sensor input circuit. • GCON ECM.	All functions inhibited.
F129: GS30, GS32, GS46 & GS47	F129:TILT SENSOR FAULT	UTS mismatch fault. Two accelerometers inside UTS mismatch.(universal tilt sensor)	• Faulty UTS.	All functions inhibited.

https://truckmanualshub.com/

Type "CXXX" Faults

DTC Number	Message on GCON LCD	Description	Possible Causes	Failure Mode
C001: GS30, GS32, GS46 & GS47	C001:GCON ECM FAULT TYPE 1	GCON ECM CRC check error.	• Incorrect software file. • GCON ECM internal failure.	All functions inhibited.
C004: GS30, GS32, GS46 & GS47	C004:GCON ECM FAULT TYPE 4	GCON ECM master switch error.	• Short circuit in the master switch circuit. • GCON ECM.	All functions inhibited.
C005: GS30, GS32, GS46 & GS47	C005:GCOM ECM FAULT TYPE 5	GCON ECM safety switch error.	• Short circuit in the safety switch circuit. • GCON ECM.	All functions inhibited.
C006: GS30, GS32, GS46 & GS47	C006:GCON ECM FAULT TYPE 6	GCON input redundancy error.	• Input conditioning circuit failure. • GCON ECM.	All functions inhibited.
C007: GS30, GS32, GS46 & GS47	C007:GCON ECM FAULT TYPE 7	GCON ECM inter-processor communication error.	• Incorrectly programmed device. • Error in loading software on device. • GCON ECM.	All functions inhibited.
C009: GS30; GS32' GS46 & GS47	C009:GCON ECM FAULT FAULT TYPE 9	GCON fault type 9.	• Contact Genie support.	All functions inhibited.
C010: GS30, GS32, GS46 & GS47	C010:SECONDARY NOT PROGRAMMED	GCON secondary processor not programmed.	• Incorrectly programmed device. • Error in loading software on device. • GCON ECM.	All functions inhibited.
C021: GS30, GS32, GS46 & GS47	C021:PCON NOT DETECTED	PCON not detected error.	• PCON disconnected. • CAN communication failure. • GCON or PCON ECM.	All functions inhibited.
C023: GS30, GS32, GS46 & GS47	C023:MACHINE MODEL FAULT	Discrepancy between model detected and model programmed.	• Incorrect machine model programmed. • GCON or PCON ECM.	All functions inhibited.
C025: GS30, GS32, GS46 & GS47	C025:SYSTEMFAULT PLAT OVLD:NOCAL	Platform overload system not calibrated.	• Platform overload system not calibrated. • GCON or PCON ECM.	All functions inhibited.

https://truckmanualshub.com/

Type "CXXX" Faults

Type "CXXX" Faults

DTC Number	Message on GCON LCD	Description	Possible Causes	Failure Mode
C028: GS30, GS32, GS46 & GS47	C028:SERVICE OVERRIDE MODE ON	Machine is in service override mode.	• Machine programmed for use in service override mode.	All functions inhibited except for down function and up function. Platform can be elevated only once with the maximum elevate time of XX seconds. Elevate time XX depends on machine model.
C029: GS-3232	C029:SYSTEMFAULT O/R SENSOR:NOCAL	Outrigger not calibrated.	• Outrigger not calibrated. • GCON ECM.	All functions operate. Will not lift above the down limit switch.
C053: GS30, GS32, GS46 & GS47	C053:PCON-GCOM SOFTWARE MISMATCH	Software revisions do not match between the PCON and GCON.	• Short circuit in the safety switch circuit. • GCON ECM.	All functions inhibited.

Note: An error code C053 will be displayed if an updated PCON is installed on a machine that has not had the GCON updated. The GCOn must be updated, or the original PCON must be installed back on the machine.

https://truckmanualshub.com/

Battery Charger

The charger continuously monitors internal and external conditions. Fault and Error codes are generated by the charger to indicate that an internal or external malfunction has been detected in the electrical system. The types of Diagnostic Trouble Codes that may occur are explained below.

Type "F" codes – Indicate an internal fault condition has occurred and caused charging to stop.

Type "E" codes - Indicate an external fault condition has occurred and caused charging to stop.

Type "P" code - Indicates charger programming mode is active. This will occur when the charger profile is being configured.

Type "USB" code - Indicates the USB interface is active, and the USB should not be removed. This will occur when the charger firmware is being updated.

Solid red - Internal fault condition. Type "F" fault code.

Flashing amber - External fault condition. Type "E" error code.

Flashing green - USB interface is active.

Solid green - Firmware update is complete. Remove USB from charger.

Codes are displayed as F, E or P and followed by three numbers and a period (example: E-0-0-4). The charger can display multiple codes.

If the batteries are changed from one type to another, (example: flooded lead acid to AGM), the charger profile must be programmed. Refer to Repair Procedure, *Programming the Charger Profile*.

https://truckmanualshub.com/

Battery Charger

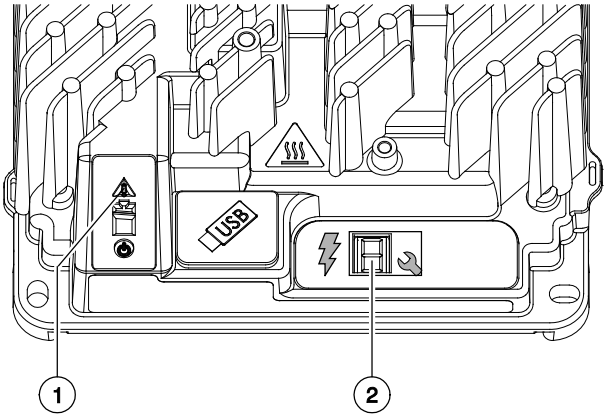

Charger status indicators

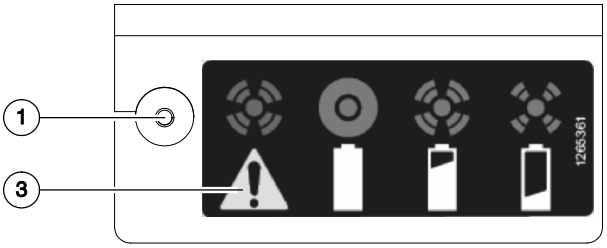

Remote charger status indicators

1 Error / Fault indicator
2 Charger display
3 Error / Fault

Charger Fault Codes

Fault Code	Description	Possible Causes	Solution
F-0-0-1	DC-DC failure: LLC excessive leakage fault.	Internal charger fault.	Disconnect AC input and battery pack for 30 seconds. If fault does not clear, contact Genie Product Support.
F-0-0-2	PFC failure: PFC excessive leakage fault.		
F-0-0-3	PFC taken too long to boost.		
F-0-0-4	Charger unable to calibrate current offset.		
F-0-0-5	Output relay voltage too high when closed.		

https://truckmanualshub.com/

Charger Error Codes

Error Code	Description	Condition	Possible Causes
E-0-0-1	High battery voltage	Battery voltage too high to charge.	Check battery voltage and cable connections. Self clearing when condition has been corrected.
E-0-0-2	Low battery voltage detected prior to starting charge cycle	Battery voltage too low to charge.	Check battery voltage and cable connections. Check battery condition. Self clearing when condition has been corrected.
E-0-0-3	Charge timeout	Charge timeout caused by battery pack not reaching required voltage within safe time limit.	Charge output reduced due to high temperature. Charge at lower temperature. Check battery condition. Replace damaged battery. Check battery connections. Battery pack deep discharge. Disconnect battery pack for 30 seconds to clear fault when condition has been corrected.
E-0-0-4	Defective battery	Battery pack could not be trickle charged up to the minimum voltage.	Check battery condition. Replace damaged battery. Check battery connections. Disconnect battery pack for 30 seconds to clear fault when condition has been corrected.
E-0-0-7	Amp hour limit exceeded	Safety limit exceeded.	Check battery condition. Replace damaged battery. Check battery connections. Battery pack deep discharge. High parasitic loads on battery pack while charging. Disconnect parasitic loads. Disconnect battery pack for 30 seconds to clear fault when condition has been corrected.

https://truckmanualshub.com/

Battery Charger

Charger Error Codes

Error Code	Description	Condition	Possible Causes
E-0-0-8	Battery temperature out of range	Battery temperature sensor.	Check temperature sensor and electrical connections. Rest charger. Disconnect AC power for 30 seconds. Self clearing when condition has been corrected.
E-0-1-1	Charger disabled by external command	Battery pack not being charged..	Power outage. AC power disconnected before charging complete.
E-0-1-2	Reverse polarity	Battery connected incorrectly.	Check battery connections. Self clearing when condition has been corrected.
E-0-1-3	Battery does not take current	Battery voltage is detected, but charger is unable to charge the battery pack..	Incorrect profile for battery type. Installed from a different machine with different battery type. Disconnect battery pack for 30 seconds to clear fault when condition has been corrected.
E-0-1-6	Software update failed	Software update failed.	Confirm USB Flash Drive is formatted with correct software. If software update continues to fail, contact Genie Product support.
E-0-1-7	USB error	USB not connected correctly.	Remove and re-insert USB Flash Drive. Disconnect AC input and battery pack for 30 seconds.
E-0-1-8	Slot CRC error	Software update failed.	Confirm USB Flash Drive is formatted with correct software. If software update continues to fail, contact Genie Product support.
E-0-1-9	Hardware does not support software	Charger hardware does not support software version being programmed.	Confirm USB Flash Drive is formatted with correct software. If software update continues to fail, contact Genie Product support.
E-0-2-0	No algorithm selected	Charger profile not programmed.	Program the charger for the proper battery profile.

https://truckmanualshub.com/

Charger Error Codes

Error Code	Description	Condition	Possible Causes
E-0-2-1	High battery voltage detected while charging	Battery voltage too high as detected by charger profile.	Check battery voltage and cable connections. Confirm charger profile is programmed for correct battery type. Self clearing when condition has been corrected.
E-0-2-2	Low battery voltage detected while charging	Battery voltage too low as detected by charger profile.	Check battery voltage and cable connections. Confirm charger profile is programmed for correct battery type. Self clearing when condition has been corrected.
E-0-2-3	High AC voltage	AC voltage greater than 270 VAC.	Connect to a stable AC source between 85 - 270 VAC / 45 - 65 Hz. Self clearing when condition has been corrected.
E-0-2-4	Failure to initialize	Charger failed to turn on correctly.	Disconnect AC input and battery pack for 30 seconds. Contact Genie Product Support.
E-0-2-5	Low AC voltage oscillation	AC voltage unstable.	Connect to a stable AC source between 85 - 270 VAC / 45 - 65 Hz. Using an undersized generator. Self clearing when condition has been corrected.
E-0-2-6	Script failure	Software update failed.	Confirm USB Flash Drive is formatted with correct software. If software update continues to fail, contact Genie Product support.
E-0-2-7	USB over current fault	USB over current protection has been tripped.	Remove and re-insert USB Flash Drive. Use different USB Flash drive.
E-0-2-8	Charge profile incompatibility	Selected charger profile is not compatible with charger software.	Update charger software. Confirm charger profile is programmed for correctly. Updating current firmware and error occurs, contact Genie Product Support.

https://truckmanualshub.com/

Battery Charger

Charger Error Codes

Error Code	Description	Condition	Possible Causes
E-0-2-9	CAN Bus error	CAN Bus network error.	Check CAN Bus connections. CAN modules not functioning correctly. Termination resistance is ~60 ohms.
E-0-3-0	COMM battery module error	CAN Bus battery module error.	CAN Buss battery module not functioning correctly.
E-0-3-1	Vref for ADC measurements triggered alarm	Internal charger error.	Disconnect AC input and battery pack for 30 seconds. Contact Genie Product Support.
E-0-3-2	CAN Bus heartbeat error	CAN Bus heartbeat error.	CAN Bus devices not functioning correctly.
E-0-3-6	Battery temperature sensor charge profile	Battery temperature sensor is required by charger profile but is not installed.	Check battery temperature sensor connections. Check charger profile and confirm battery temperature sensor is installed.
E-0-3-8	CAN Open Error	CAN Open reprogramming failed.	Download CAN Open software. Reprogram charger using USB Flash Drive.

https://truckmanualshub.com/

Schematics

Observe and Obey:

- ☑ Troubleshooting and repair procedures shall be completed by a person trained and qualified on the repair of this machine
- ☑ Immediately tag and remove from service a damaged or malfunctioning machine.
- ☑ Repair any machine damage or malfunction before operating the machine.

Before Troubleshooting:

- ☑ Read, understand and obey the safety rules and operating instructions in the appropriate operator's manual on your machine.
- ☑ Be sure that all necessary tools and test equipment are available and ready for use.

About This Section

There are two groups of schematics in this section.

Electrical Schematics

⚠WARNING Electrocution/burn hazard. Contact with electrically charged circuits could result in death or serious injury. Remove all rings, watches and other jewelry.

Hydraulic Schematics

⚠WARNING Bodily injury hazard. Spraying hydraulic oil can penetrate and burn skin. Loosen hydraulic connections very slowly to allow the oil pressure to dissipate gradually. Do not allow oil to squirt or spray.

https://truckmanualshub.com/

Electrical Component and Wire Color Legends

ELECTRICAL COMPONENT LEGEND	
Item	**Description**
B5	Batteries
	B5 = Battery Pack 24V DC, 4 each @ 6V DC (all machines except GS-4047) B10 = Battery Pack 24 V DC Wired in Parallel, 4 each @ 12 V DC (GS-4047)
C	Connector
	C1 = Anderson Connector C2 = PCON Cable Connector C3 = PCON Coil Cord Connector C4 = Power Control (J1) C5 = Sensors & Switches (J3) C6 = Function Manifold (J2) C7 = Sensor Power Bus C8 = Sensor Ground Bus C9 = Pot Hole Limit Switch C10 = Down Limit Switch C11 = Level Sensor C12 = Function Manifold Ground Bus C13 = Drive Reverse Coil C14 = Drive Forward Coil C15 = Steer Right Coil C16 = Steer Left Coil C17 = Platform Up Coil C18 = Platform Down Coil C19 = Load Sense Cable C20 = Platform Height Cable C21 = Load Sense Ground Cable C22 = Parallel Coil C23 = Platform Height Sensor C24 = Platform Overload Transducer C25 = Outrigger (J4) (GS-3232) C26 = Outrigger Retract Coil (GS-3232) C27 = Outrigger Extend Coil (GS-3232) C28 = Right Rear Outrigger Coil (GS-3232) C29 = Left Rear Outrigger Coil (GS-3232) C30 = Right Front Outrigger Coil (GS-3232) C31 = Left Front Outrigger Coil (GS-3232) C32 = Outrigger Manifold Ground Bus (GS-332) C33 = Outrigger Sensor Power Bus (GS-3232) C34 = Outrigger Level Sensor Ground Bus (GS-3232) C35 = Left Front Outrigger Pressure Transducer (GS-3232) C36 = Right Front Outrigger Pressure Transducer (GS-3232)

ELECTRICAL COMPONENT LEGEND cont.	
Item	**Description**
C	Connector
	C37 = Left Rear Outrigger Pressure Transducer (GS-3232) C38 = Right Rear Outrigger Pressure Transducer (GS-3232) C39 = Outrigger Sensor Power (GS-3232) C40 = Up Limit Switch (GS-3232) C41 = Platform Control Bus C43 = Key Switch, Platform Mode C44 = Key Switch, Emergency Stop C45 = Automotive Style Horn + C46 = Emergency Stop C47 = GCON Alarm + C48 = Circuit Breaker, MTR V+ C49 = Emergency Stop, ECM Driver V+ C50 = Circuit Breaker, ECM Driver V+ C51 = Key Switch, Ground Mode C52 = GCON Alarm - C53 = Automotive Style Horn - C70 = Platform Down Coil + (GS-3232 & GS-3246) C71 = Platform Down Coil - (GS-3232 & GS-3246) C84 = Lift Pressure Selector Coil (GS-4047)
CB2	Circuit Breaker, 7A
E	Enclosure
	EN1 = Platform Control Box
	EN4 = AC Outlet Box
FB	Flashing Beacon (option)
FS1	Foot Switch (option)
GND	Ground Stud
H	Horn or Alarm
	H1 = Horn or Alarm H2 = Automotive Style Horn (option) H5 = Multifunction Alarm
J	Connector Plug
	J1 = Power Control (U5) J2 = Function Manifold (U5) J3 = Sensors & Switches (U5) J4 = Outriggers (U5) GS-3232) J5 = PCON Coil Cord to Platform Controls PC Board J6 = PCON Emergency Stop & Alarm to Platform Controls PC Board J7 = Joystick to Platform Controls PC Board

https://truckmanualshub.com/

Electrical Component and Wire Color Legends

ELECTRICAL COMPONENT LEGEND cont.	
Item	**Description**
JC9	Joystick Controller
K1	Contactor, Motor Controller Power, N.O.H.C.
KS1	Key Switch
LS	Limit Switch
	LS1 = Maximum Drive Height (GS-3232) LS6 = Platform Down LS7 = Pothole LS8 = Pothole LS10 = Maximum Drive Height (GS-3232)
M5	Hydraulic Power Unit
N.C.	Normally Closed
N.C.H.O	Normally Closed Held Open
N.O.H.C.	Normally Open Held Closed
P	Power Switch
	P1 = Emergency Stop Button at Ground Controls P2 = Emergency Stop Button at Platform Controls
PT	Pressure Transducer
	PT1 = Left Front Outrigger (GS-3232) PT2 = Right Front Outrigger (GS-3232) PT3 = Left Rear Outrigger (GS-3232) PT4 = Right Rear Outrigger (GS-3232) PT15 = Platform Overload (option)
R30	Resistor, 20 Ohm, 10W
S	Sensor
	S7 = Level Sensor S8 = Outrigger Level Sensor (GS-3232) S14 = Platform Height Sensor
U	Electronic Component
	U3 = PCON Printed Circuit Board U5 = Electronic Control Module U6 = Motor Controller U9 = Battery Charger U13 = Voltage Inverter (option)
Y	Valve Coil
	Y1 = Parallel (GS-32, GS-46 & GS47 models) Y2 = Lift Pressure Selector (GS-4047) Y3 = Steer Right Y4 = Steer Left Y5 = Drive Reverse Y6 = Drive Forward Y7 = Platform Down Y8 = Platform Up Y9 = Platform Down GS-3232 & GS-3246) Y33 = Left Rear Outrigger (GS-3232) Y34 = Right Rear Outrigger (GS-3232) Y35 = Left Front Outrigger (GS-3232) Y36 = Right Front Outrigger (GS-3232) Y39 = Outrigger Retract (GS-3232) Y40 = Outrigger Extend (GS-3232)

WIRE COLOR LEGEND	
Color	**Description**
BK	Black
BK/RD	Black/Red
BL	Blue
BL/BK	Blue/Black
BL/OR	Blue/Orange
BL/WH	Blue/White
BR	Brown
GR	Green
GR/BK	Green/Black
GR/WH	Green/White
GR/YL	Green/Yellow
LB	Light Blue
OR	Orange
OR/BK	Orange/Black
OR/RD	Orange/Red
OR/WH	Orange/White
RD	Red
RD/BK	Red/Black
RD/WH	Red/White
WH	White
WH/BK	White/Black
YL	Yellow

https://truckmanualshub.com/

Wiring Diagram Ground and Platform Controls

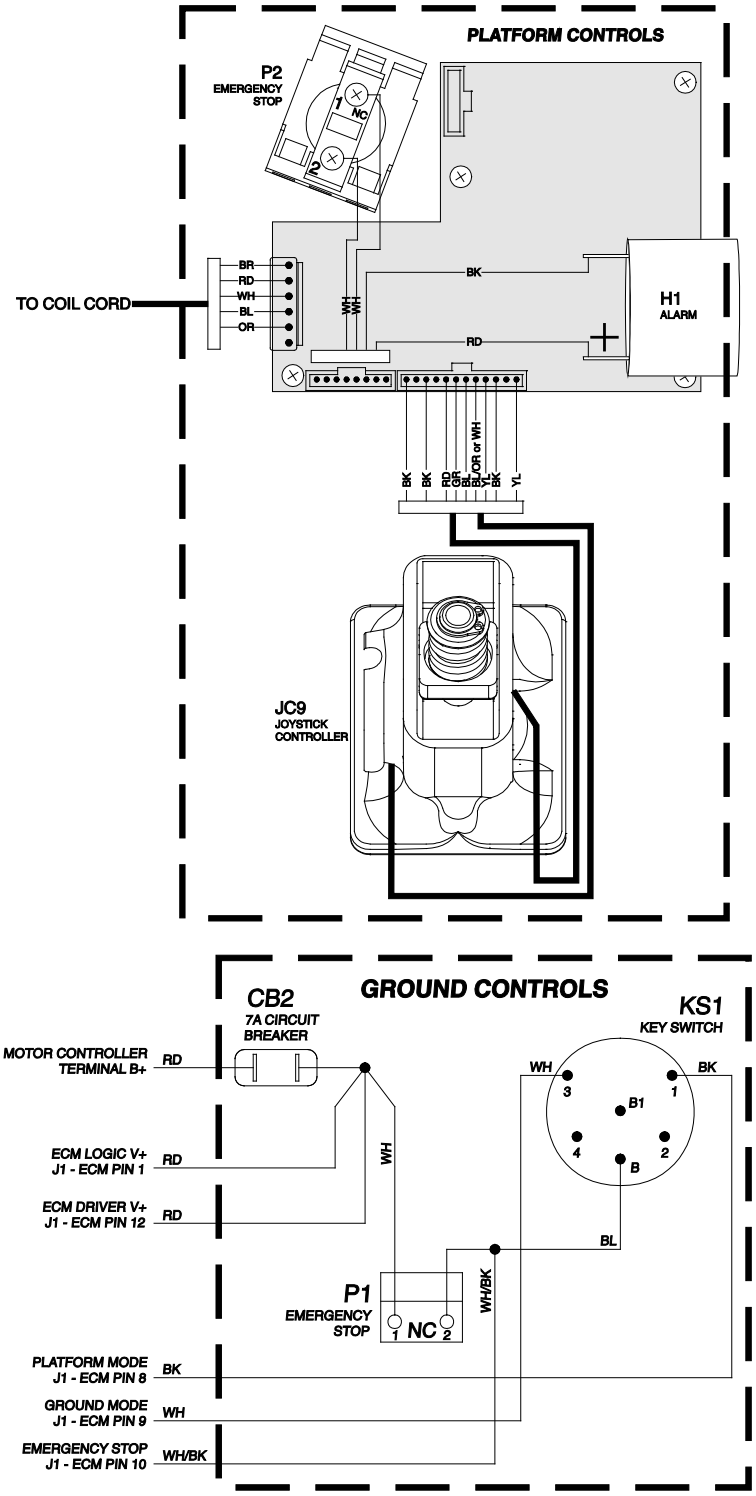

https://truckmanualshub.com/

Limit Switch Legend

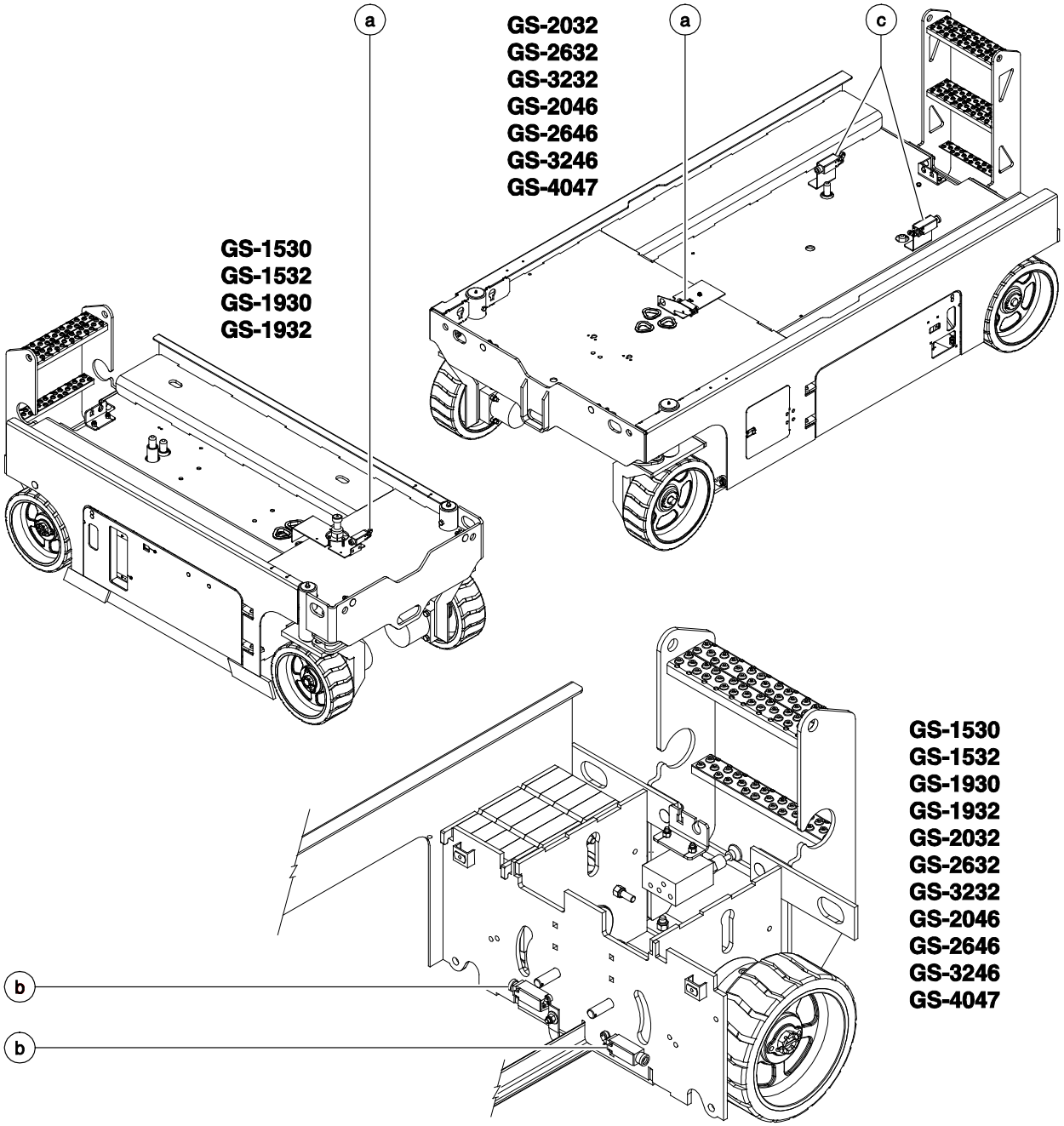

Limit Switch Legend

a down limit switch LS6
b pothole limit switches LS7, LS8
c 22ft / 6.7 m maximum drive height when outriggers are not deployed (LS1, LS10 GS-3232)

https://truckmanualshub.com/

Electrical Symbol Legend

Wire with description or color

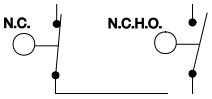

Limit Switch

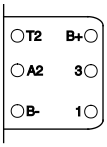

Motor controller

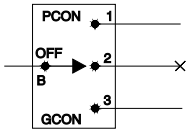

Key switch

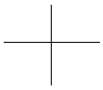

Circuits crossing no connection

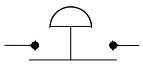

Emergency Stop button

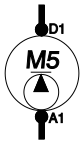

Motor

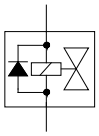

Solenoid valve with diode

Diode

Circuit breaker

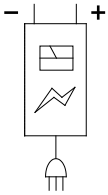

Battery charger

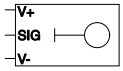

Level sensor

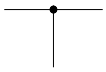

Circuit connection

Fuse

6V or 12V DC battery

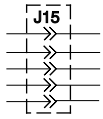

Deutsch connector

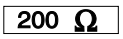

Resistor

Contactor

Horn or alarm

Flashing beacon

Platform height sensor

Pressure transducer

https://truckmanualshub.com/

Hydraulic Symbols Legend

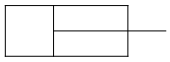

Hydraulic cylinder

Variable speed motor

Pressure transducer

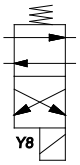

Solenoid operated
2 position 4 way
directional valve

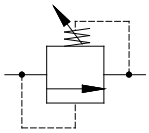

Relief valve

Bi-directional motor

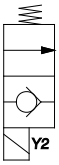

Solenoid operated
2 position 2 way
blocking valve
normally open

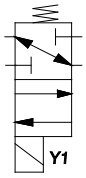

Solenoid operated
2 position 4 way
directional valve

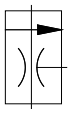

Priority flow regulator

Brake

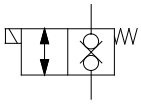

Solenoid operated
2 position 2 way valve
normally closed

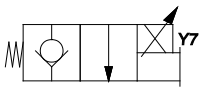

Proportional solenoid operated
2 position 2 way directional valve
normally closed

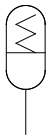

Accumulator

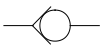

Check valve

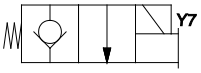

Solenoid operated
2 position 2 way
directional valve
normally closed

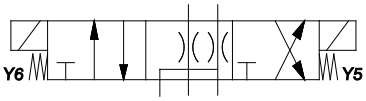

Solenoid operated
3 position 5 way
directional valve

Fixed displacement
pump

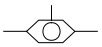

Shuttle valve

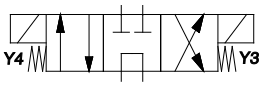

Solenoid operated 3 position
4 way directional valve

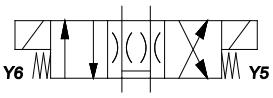

Solenoid operated 3 position 4 way
directional valve

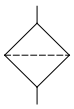

Filter

Orifice with size

https://truckmanualshub.com/

Hydraulic Schematics

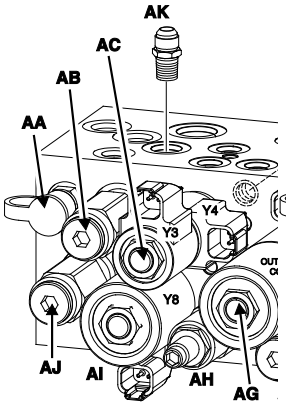

Function Manifold
GS-2032, GS-2632,
GS-3232, GS-2046,
GS-2646 and GS-3246

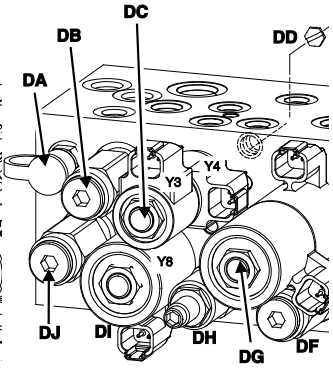

Function Manifold
GS-4047

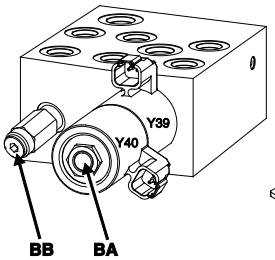

Outrigger Manifold
GS-3232

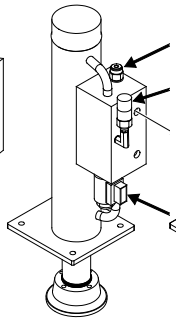

Front
Outrigger
Cylinder
GS-3232

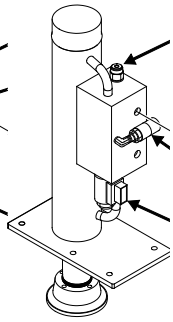

Rear
Outrigger
Cylinder
GS-3232

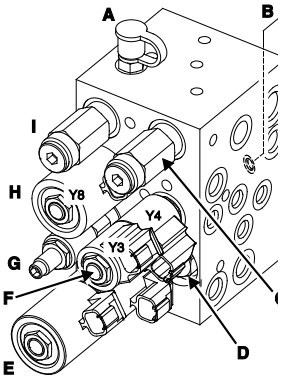

Function Manifold
GS-1530, GS-1532,
GS-1930 and GS-1932

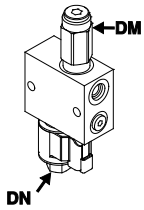

Lift Pressure
Selector
Manifold
GS-4047

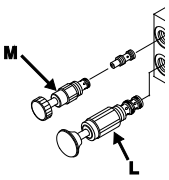

Brake
Release
Manifold
All Models

https://truckmanualshub.com/

Hydraulic Component Abbreviation Legend

Item	Description
A	Test port
B	Check valve, steer circuit
C	Relief valve, lift
D	Check valve, drive circuit
E	Drive forward/reverse
F	Steer left/right
G	Flow regulator/relief valve
H	Platform up
I	Relief valve, system
L	Hand pump, manual brake release
M	Needle valve, manual brake release
N	Platform lowering valve
O	Orifice, platform down circuit
P	Accumulator
Q	Relief valve, platform down
R	Pressure transducer, platform overload (CE only)
S	Check valve, drive circuit
AA	Test Port
AB	Relief valve, system
AC	Steer left/right
AD	Check dics, steer circuit
AE	Drive speed
AF	Relief valve, brake circuit
AG	Drive forward/reverse
AH	Flow regulator/relive valve
AI	Platform up
AJ	Relief valve, lift
AK	Check valve, lift (GS-3232 and GS-3246 equipped with load sense only)

Item	Description
BA	3 position, 4 way directional valve – outrigger cylinder extend/retract
BB	Relief valve, outrigger circuit
CA	Right front outrigger extend/retract
CB	Left front outrigger extend/retract
CC	Right rear outrigger extend/retract
CD	Left rear outrigger extend/retract
CE	Orifice plug – outrigger retract
CF	Check valve, pilot operated
CG	Pressure transducer
DA	Test port
DB	Relief valve, system
DC	Steer left/right
DD	Check valve steer circuit
DE	Drive speed
DF	Relief valve, brake release
DG	Drive forward/reverse
DH	Flow regulator/relief valve
DI	Platform up
DJ	Relief valve, lift
DK	Check valve, upper cylinder
DL	Check valve, lower cylinder
DM	Relief valve, lift
DN	Lift circuit
DO	Platform lowering valve

https://truckmanualshub.com/

Hydraulic Schematics

Hydraulic Schematic, GS-1530 / 1532 / 1930 / 1932 (from serial number GS3010A-110000, GS3011C-10000, GS3014D-101, GS3016P-142281)

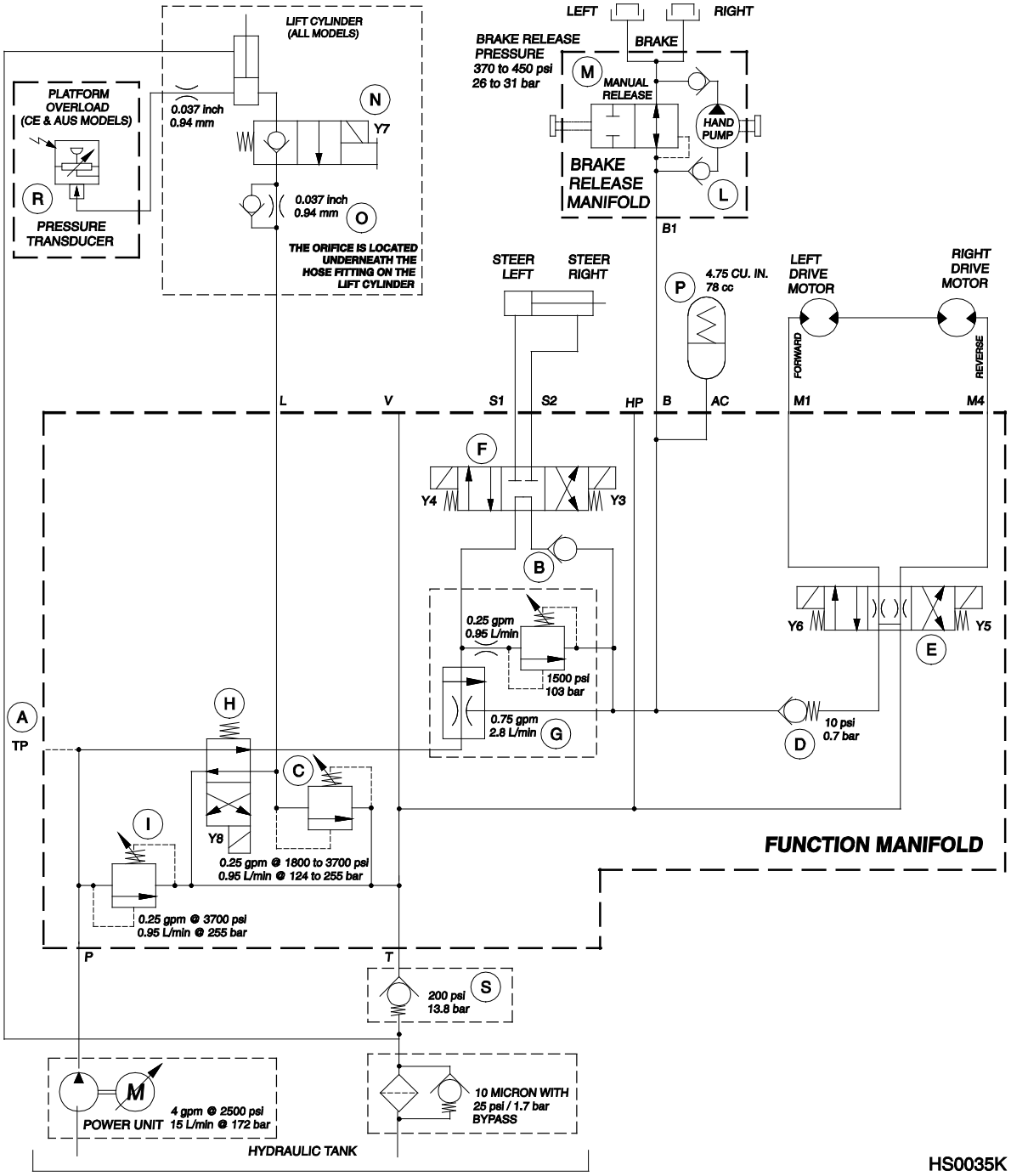

https://truckmanualshub.com/

Hydraulic Schematic, GS-2032 / 2632 / 3232 (from serial number GS3211A-110000 to GS3214A-119070, GS3212C-10000 to GS3214C-11873) GS-2046 / 2646 / 3246 (from serial number GS4612A-110000 to GS4614A-117177, GS4614C-10000 to GS4614C-12073)

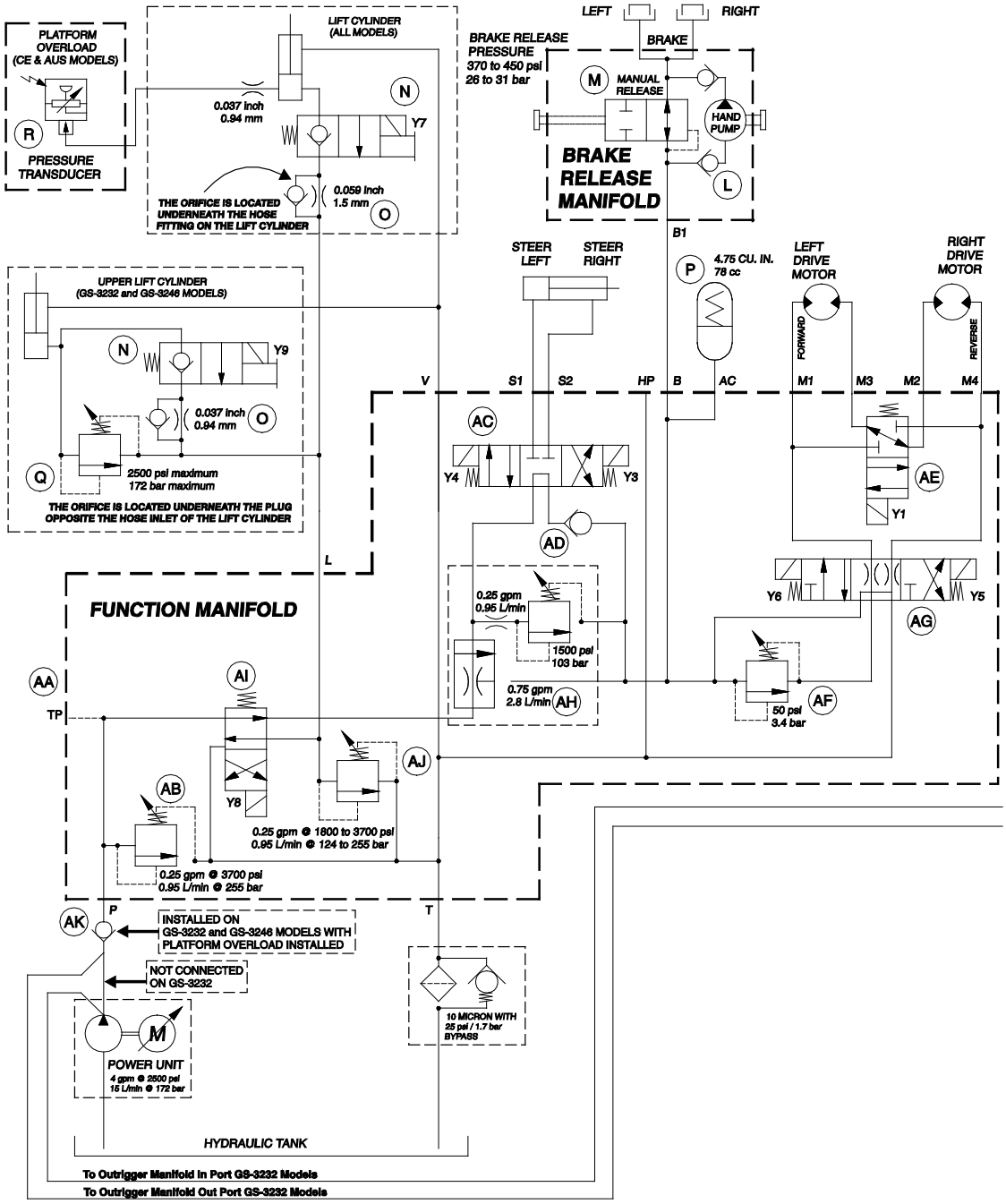

HS0036R

https://truckmanualshub.com/

Hydraulic Schematics

Hydraulic Schematic, GS-2032 / 2632 / 3232 (from serial number GS3214A-119071, GS3214C-11874) GS-2046 / 2646 / 3246 (from serial number GS4614A-117178, GS4614C-12074, GS4614D-101)

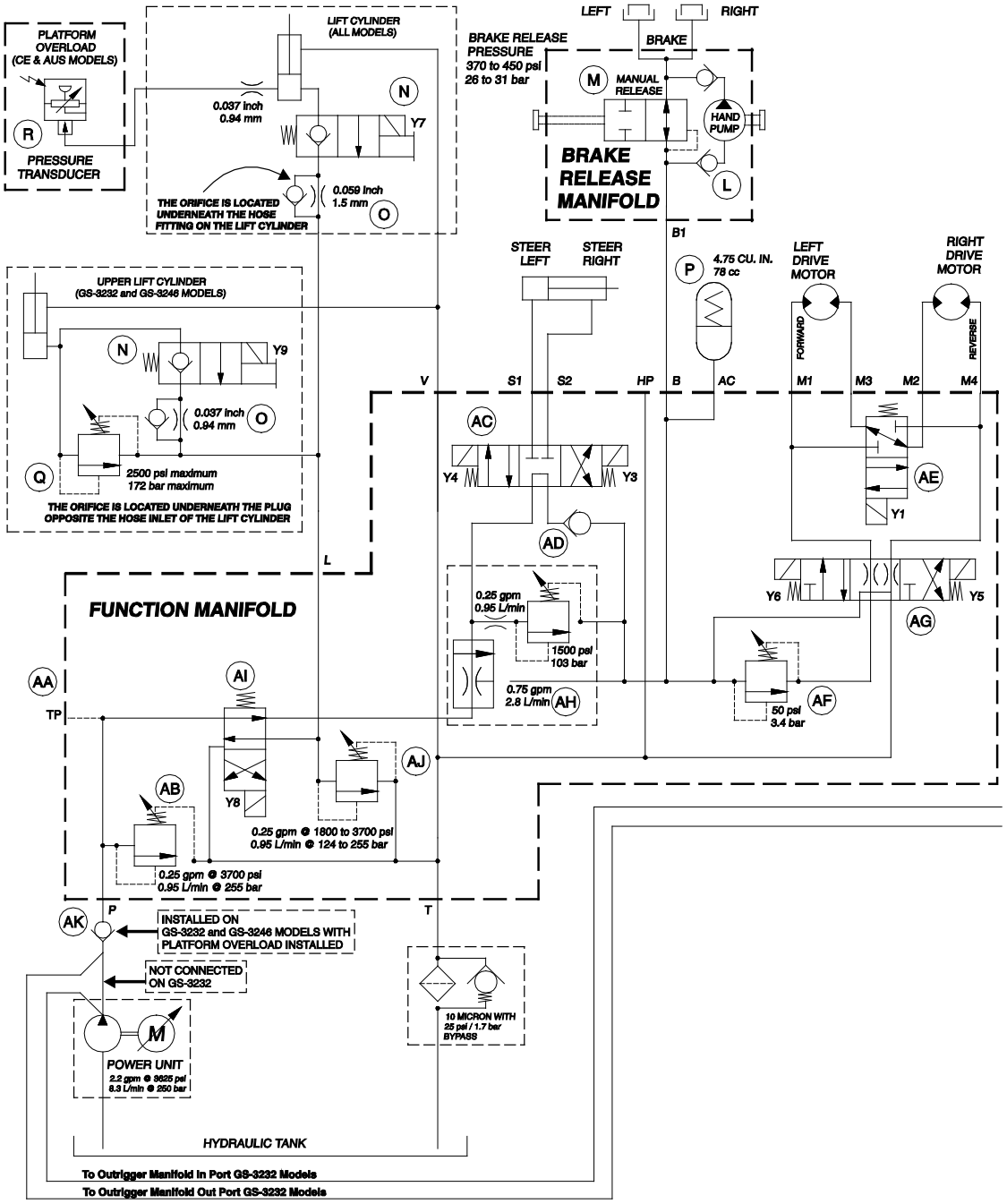

HS0036T

https://truckmanualshub.com/

Hydraulic Schematic, GS-3232
(from serial number GS3211A-110000, GS3212C-10000, GS3216P-142677)

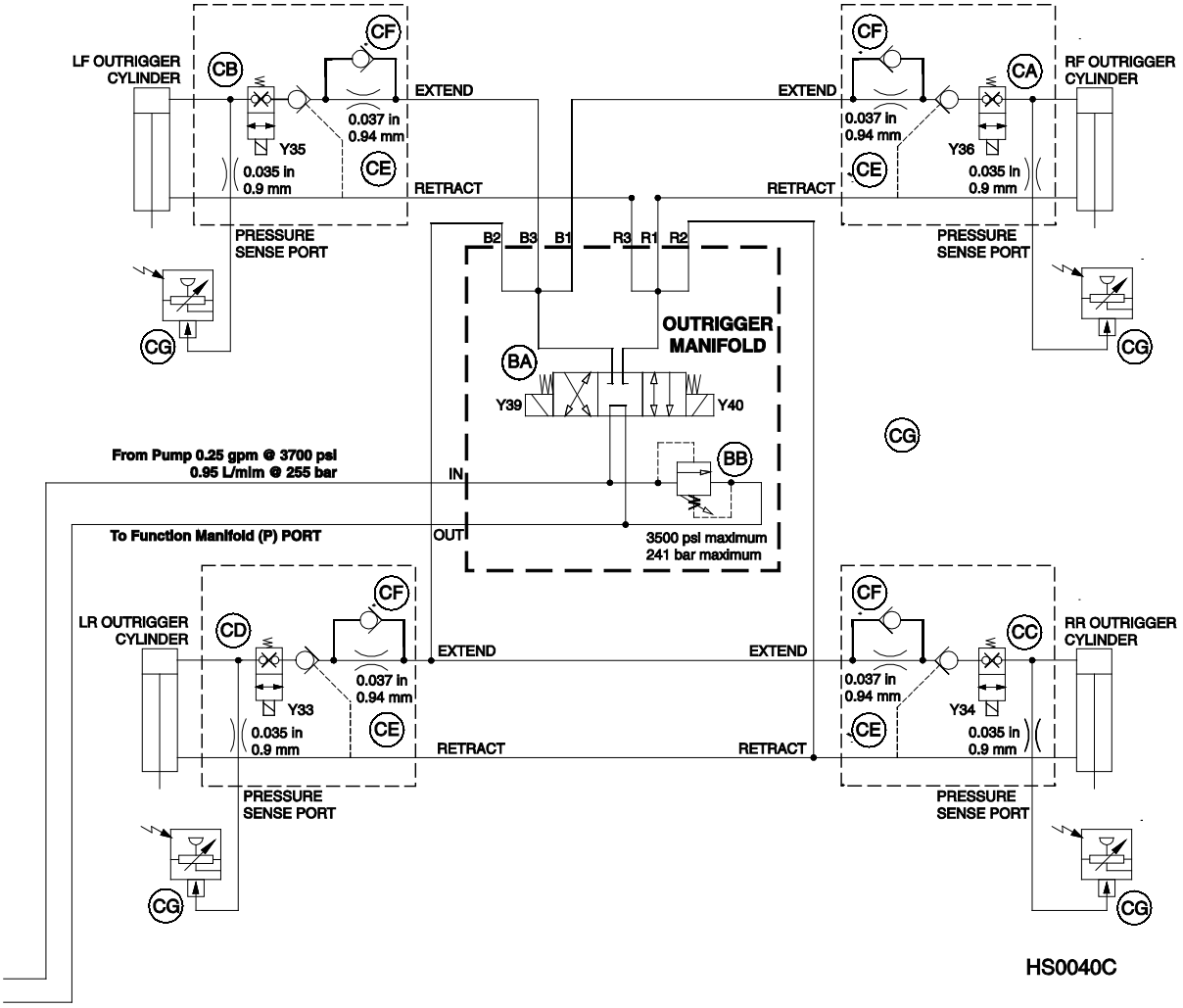

https://truckmanualshub.com/

Hydraulic Schematics

Hydraulic Schematic, GS-4047 (from serial number GS4712C-101 to GS4714C-1459)

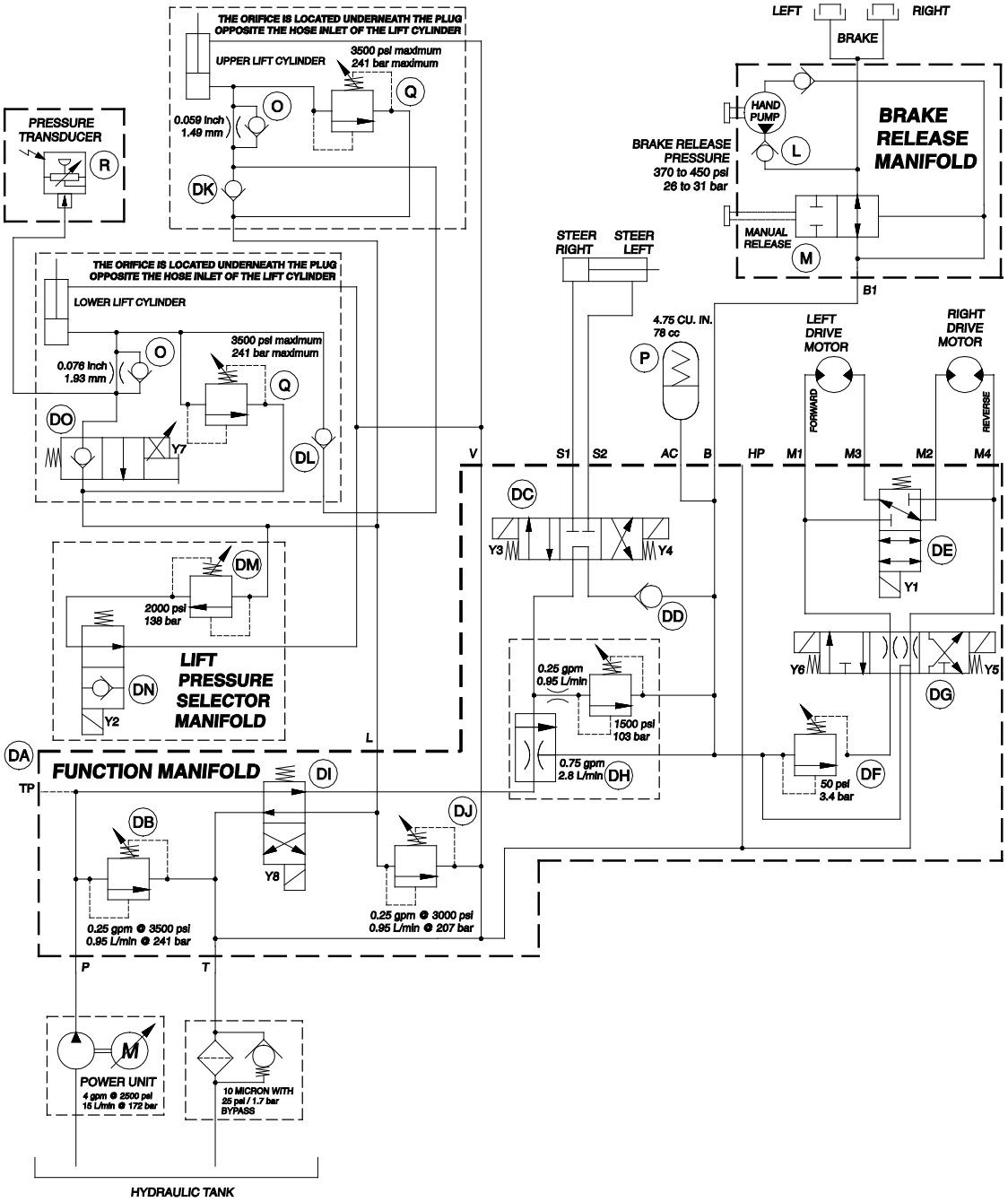

HS0254B

https://truckmanualshub.com/

Hydraulic Schematic, GS-4047
(from serial number GS4714C-1460, GS4714D-101, GS4716P-101)

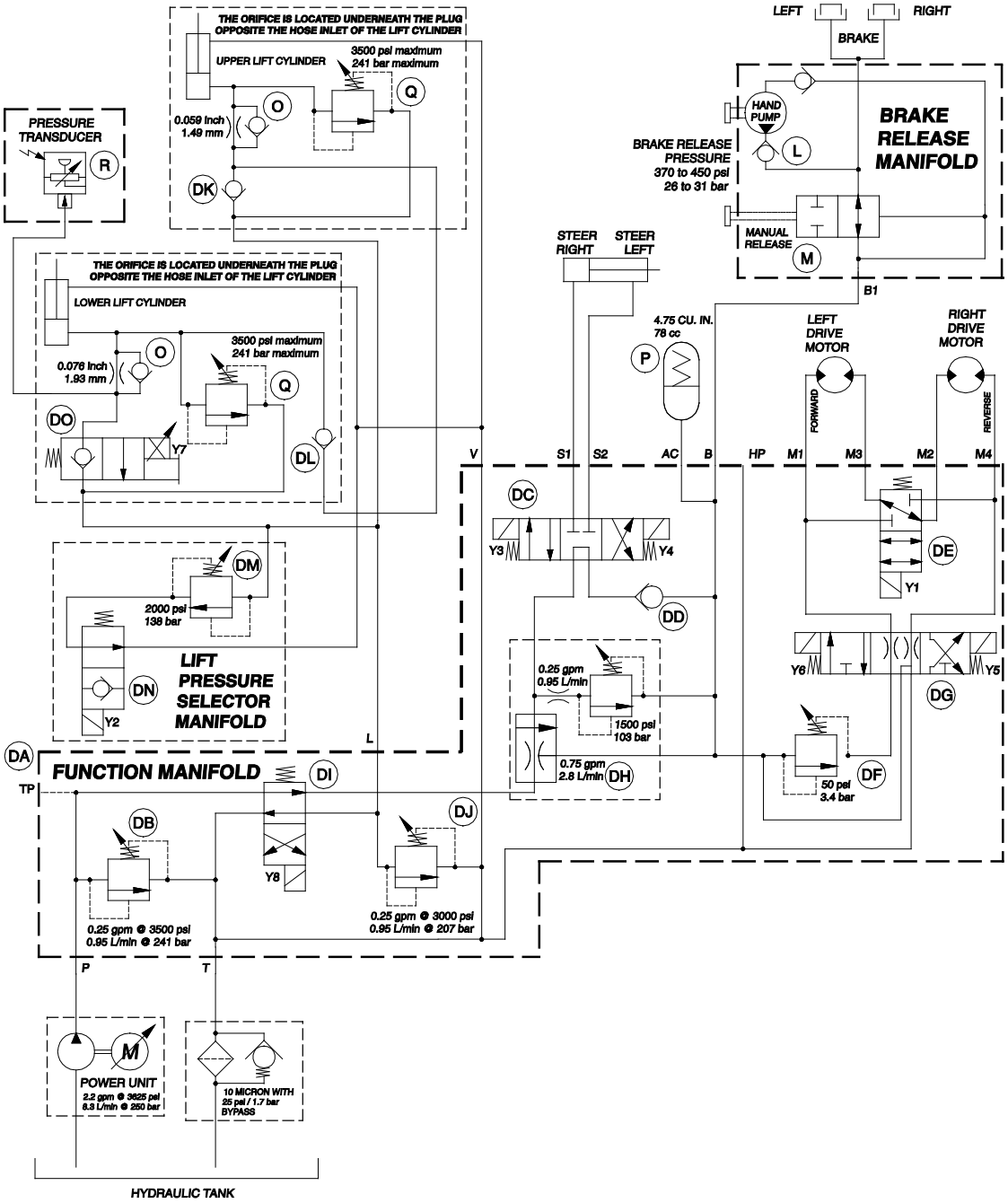

HS0254C

https://truckmanualshub.com/

This page intentionally left blank.

https://truckmanualshub.com/

Electrical Schematic, GS-1530 / GS-1930, ANSI / CSA

(from serial number GS3010A-110000 to GS3011A-110827)

https://truckmanualshub.com/

Electrical Schematic, GS-1530 / GS-1930, ANSI / CSA

(from serial number GS3010A-110000 to GS3011A-110827)

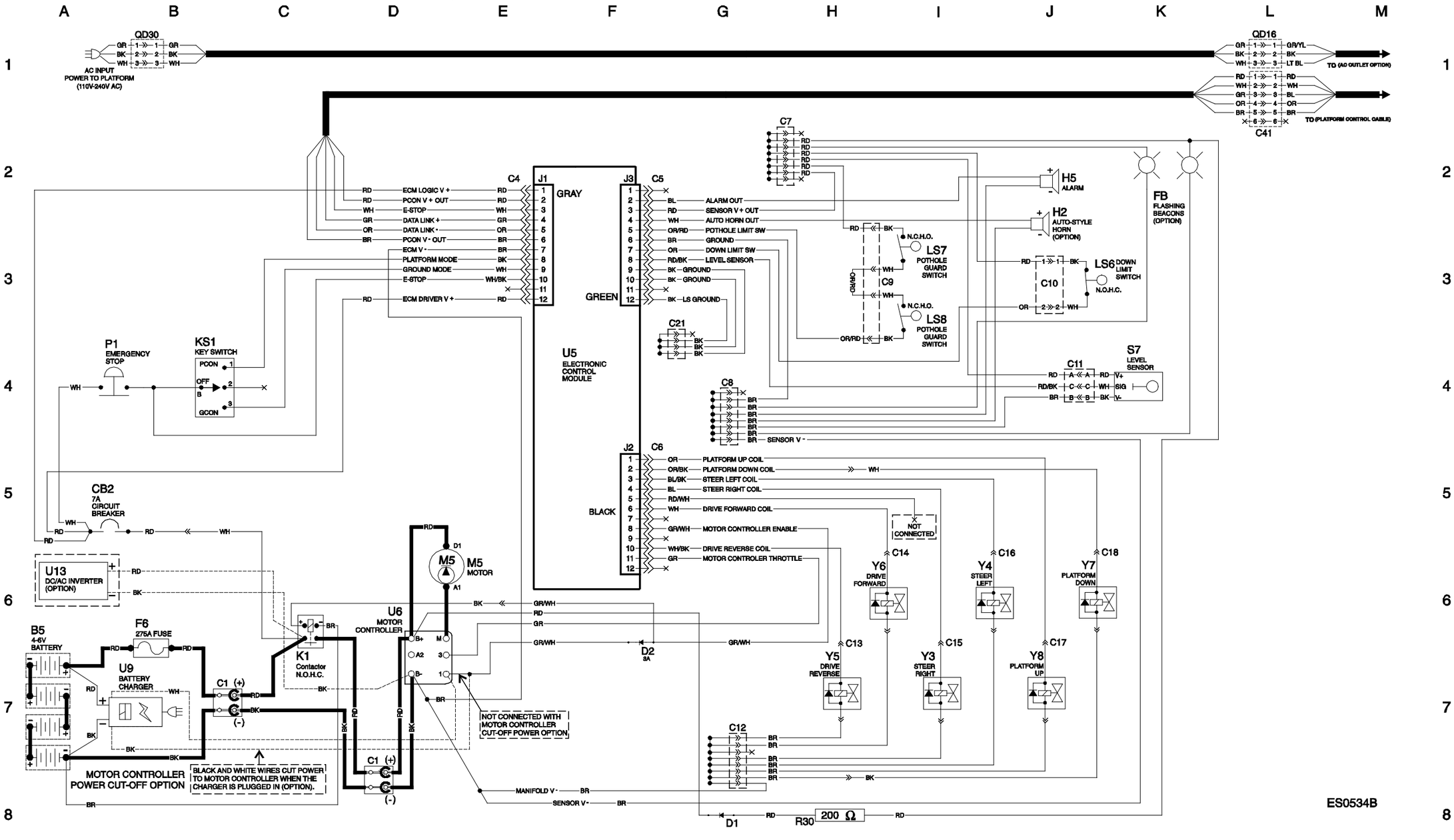

https://truckmanualshub.com/

Electrical Schematic, GS-1530 / GS-1930, ANSI / CSA

(from serial number GS3010A-110000 to GS3011A-110827)

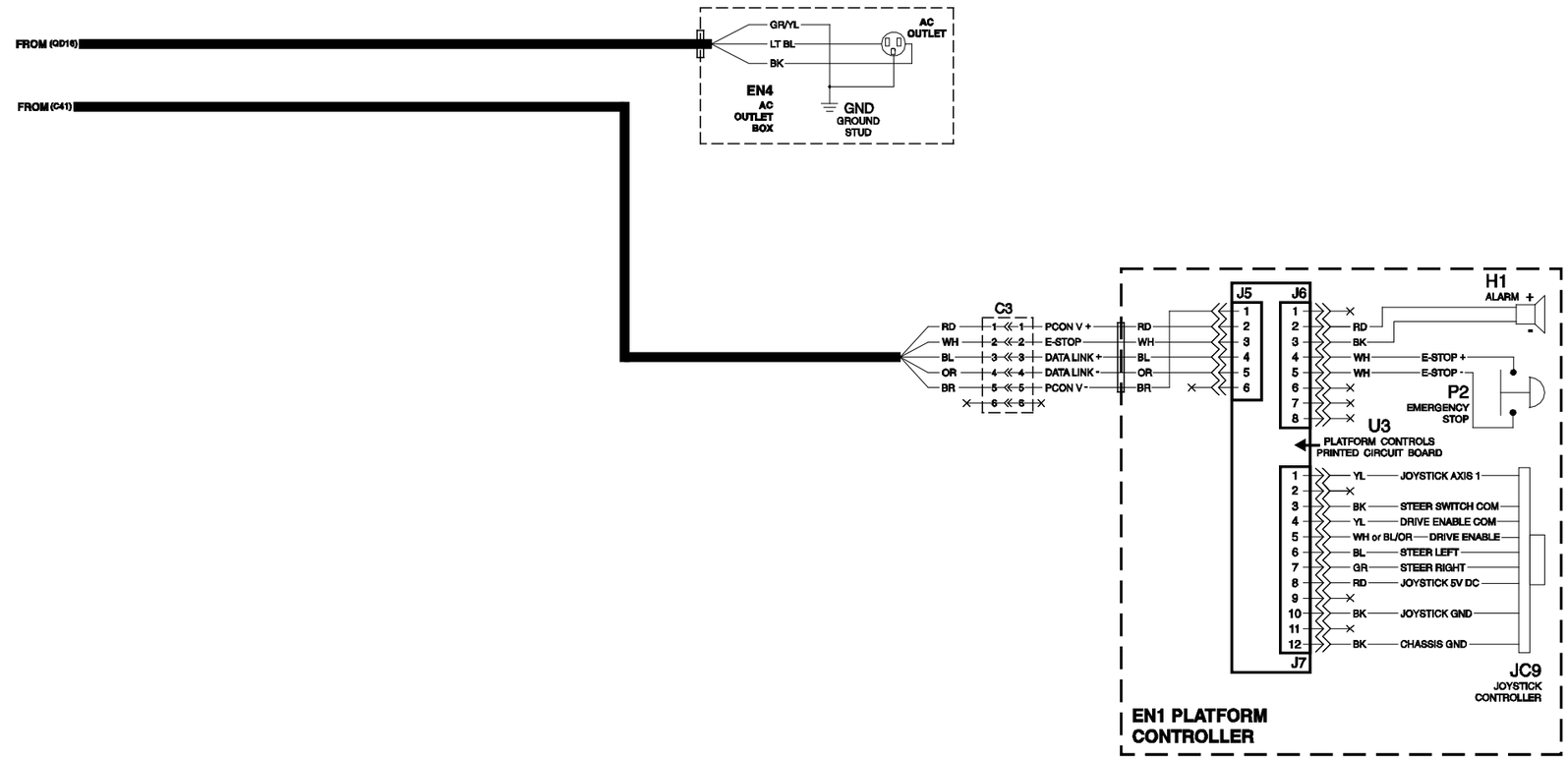

https://truckmanualshub.com/

Electrical Schematic, GS-1530 / GS-1930, ANSI / CSA

(from serial number GS3010A-110000 to GS3011A-110827)

https://truckmanualshub.com/

Electrical Schematic, GS-1530 / GS-1930, ANSI / CSA

(from serial numbers GS3011A-110828 to GS3014A-136972, GS3014D-101 to GS3015D-1113)

https://truckmanualshub.com/

Electrical Schematic, GS-1530 / GS-1930, ANSI / CSA

(from serial numbers GS3011A-110828 to GS3014A-136972, GS3014D-101 to GS3015D-1113)

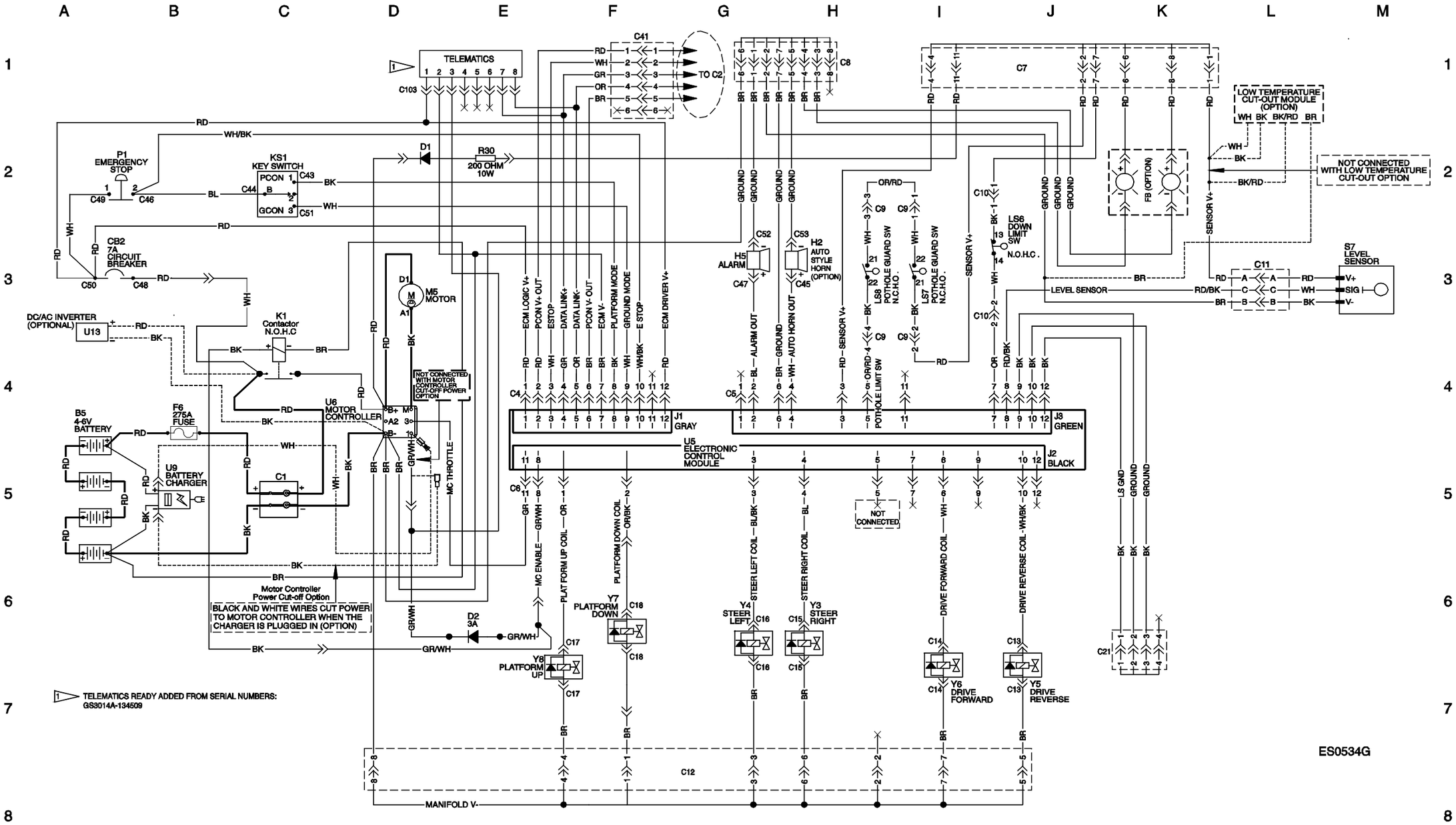

https://truckmanualshub.com/

Electrical Schematic, GS-1530 / GS-1930, ANSI / CSA

(from serial numbers GS3011A-110828 to GS3014A-136972, GS3014D-101 to GS3015D-1113)

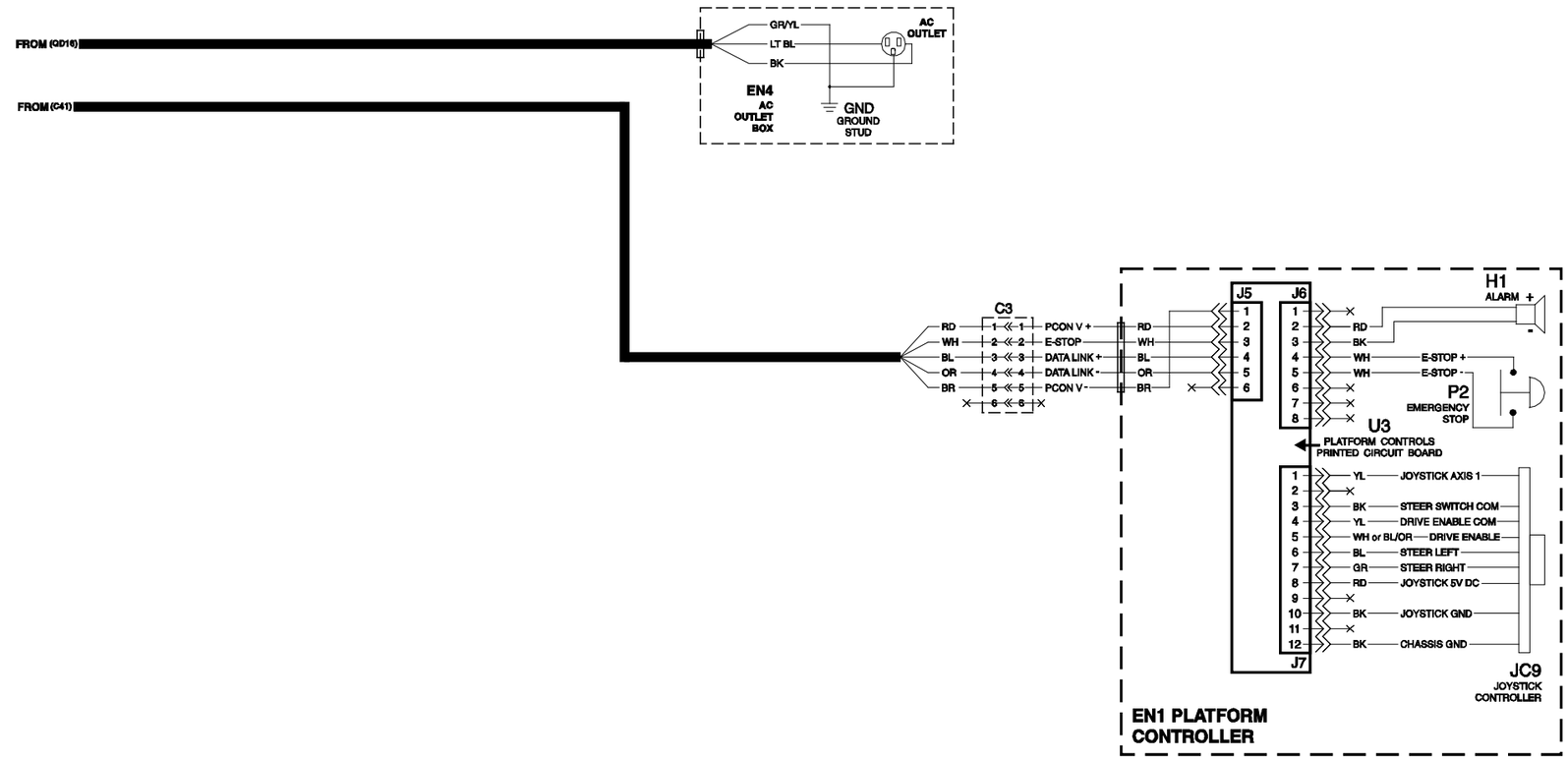

https://truckmanualshub.com/

Electrical Schematic, GS-1530 / GS-1930, ANSI / CSA

(from serial numbers GS3011A-110828 to GS3014A-136972, GS3014D-101 to GS3015D-1113)

https://truckmanualshub.com/

Electrical Schematic, GS-1530 / GS-1930, ANSI / CSA

(from serial numbers GS3014A-136973, GS3015D-1114 to GS3016D-5426, GS3016P-142281 to GS3016P-158208)

https://truckmanualshub.com/

Electrical Schematic, GS-1530 / GS-1930, ANSI / CSA

(from serial numbers GS3014A-136973, GS3015D-1114 to GS3016D-5426, GS3016P-142281 to GS3016P-158208)

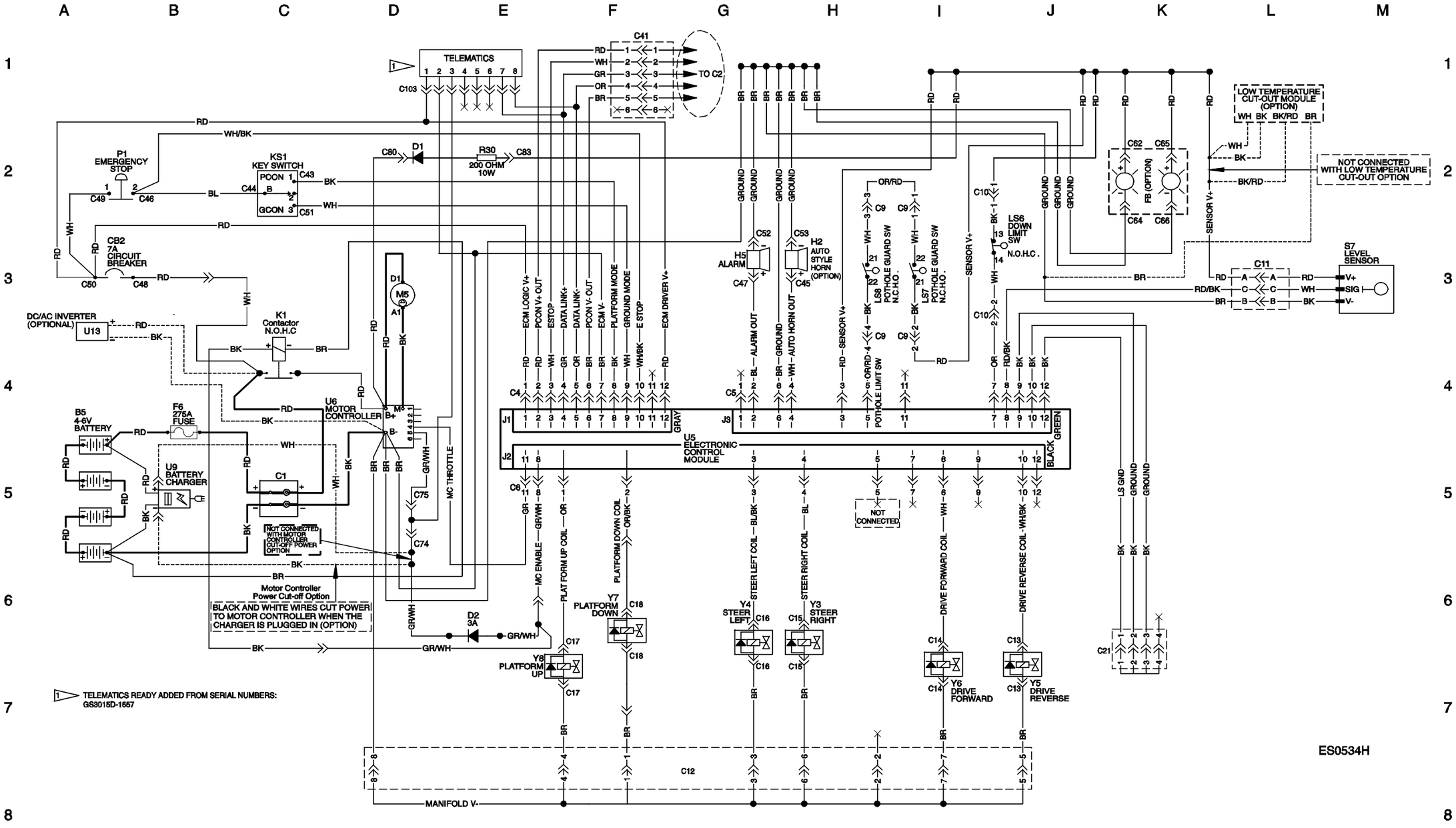

https://truckmanualshub.com/

Electrical Schematic, GS-1530 / GS-1930, ANSI / CSA

(from serial numbers GS3014A-136973, GS3015D-1114 to GS3016D-5426, GS3016P-142281 to GS3016P-158208)

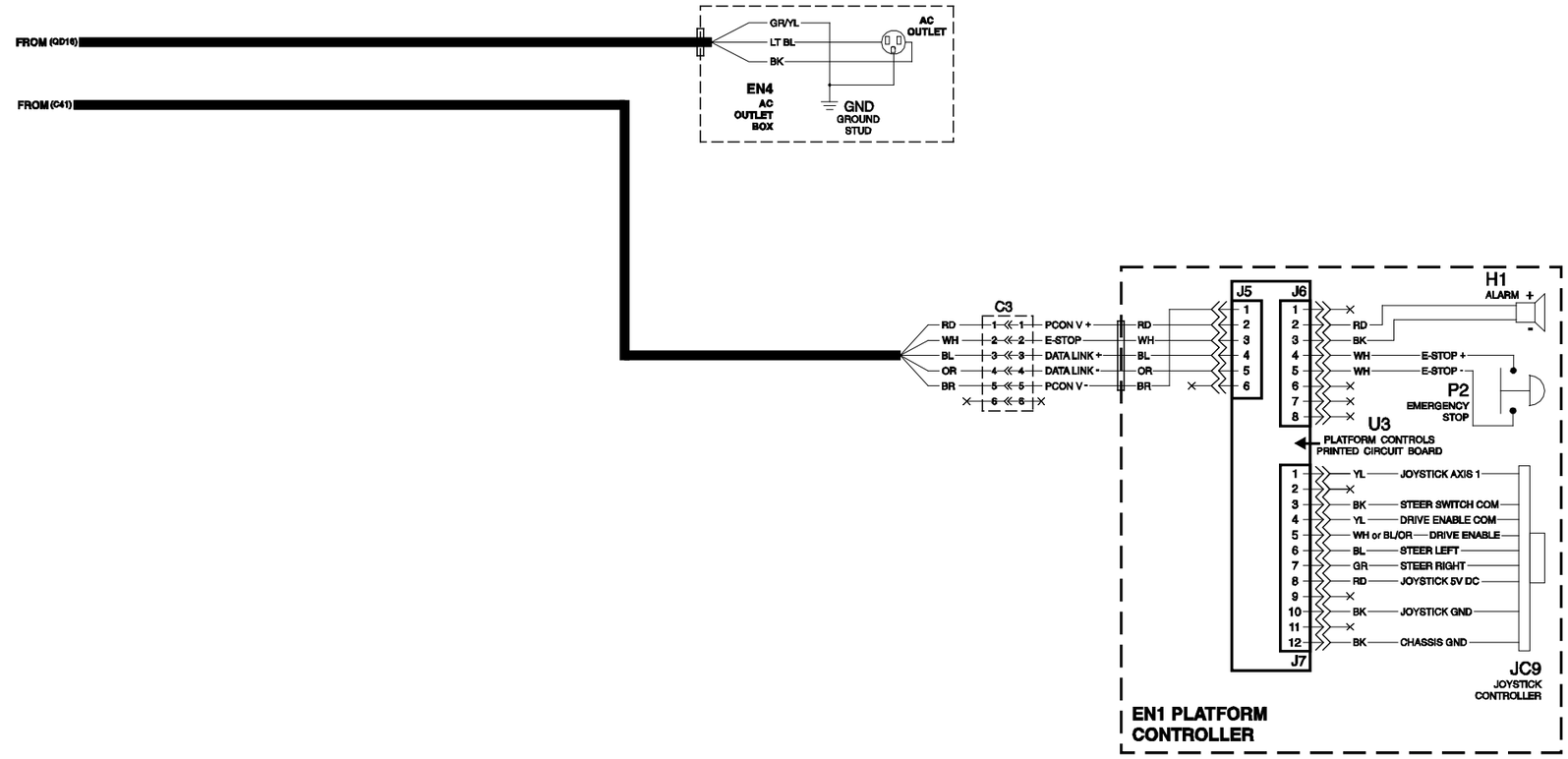

https://truckmanualshub.com/

Electrical Schematic, GS-1530 / GS-1930, ANSI / CSA

(from serial numbers GS3014A-136973, GS3015D-1114 to GS3016D-5426, GS3016P-142281 to GS3016P-158208)

https://truckmanualshub.com/

Electrical Schematic, GS-1530, GS-1930 ANSI / CSA

(from serial numbers GS3016D-5427, GS301P-158209)

https://truckmanualshub.com/

Electrical Schematic, GS-1530 / GS-1930, ANSI / CSA

(from serial numbers GS3016D-5427, GS3016P-158209)

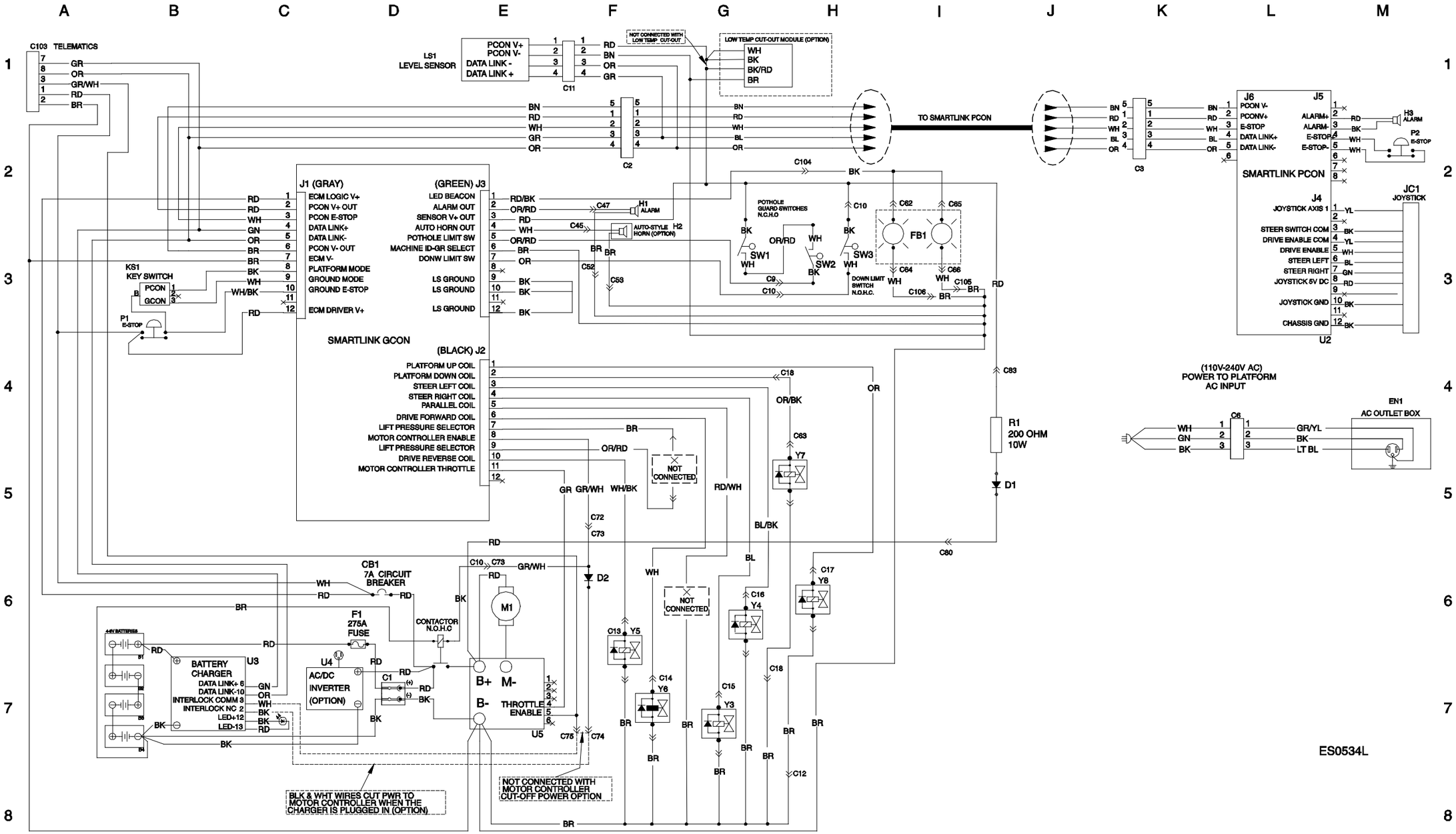

https://truckmanualshub.com/

Electrical Schematic, GS-3232, ANSI / CSA

(from serial number GS3211A-110000 to GS3214A-135714)

https://truckmanualshub.com/

Electrical Schematic, GS-3232, ANSI / CSA

(from serial number GS3211A-110000 to GS3214A-135714)

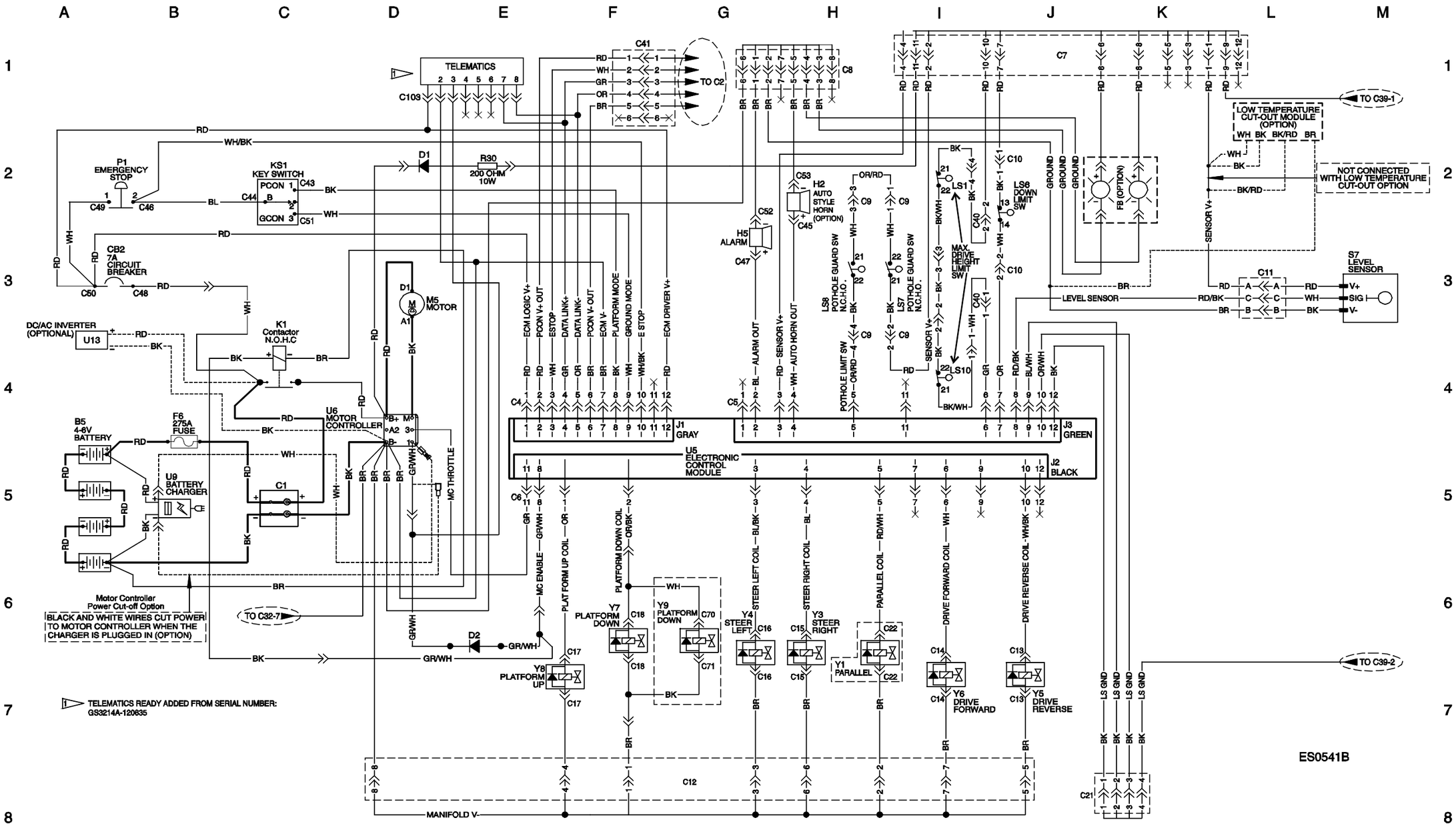

https://truckmanualshub.com/

Electrical Schematic, GS-3232, ANSI / CSA

(from serial number GS3211A-110000 to GS3214A-135714)

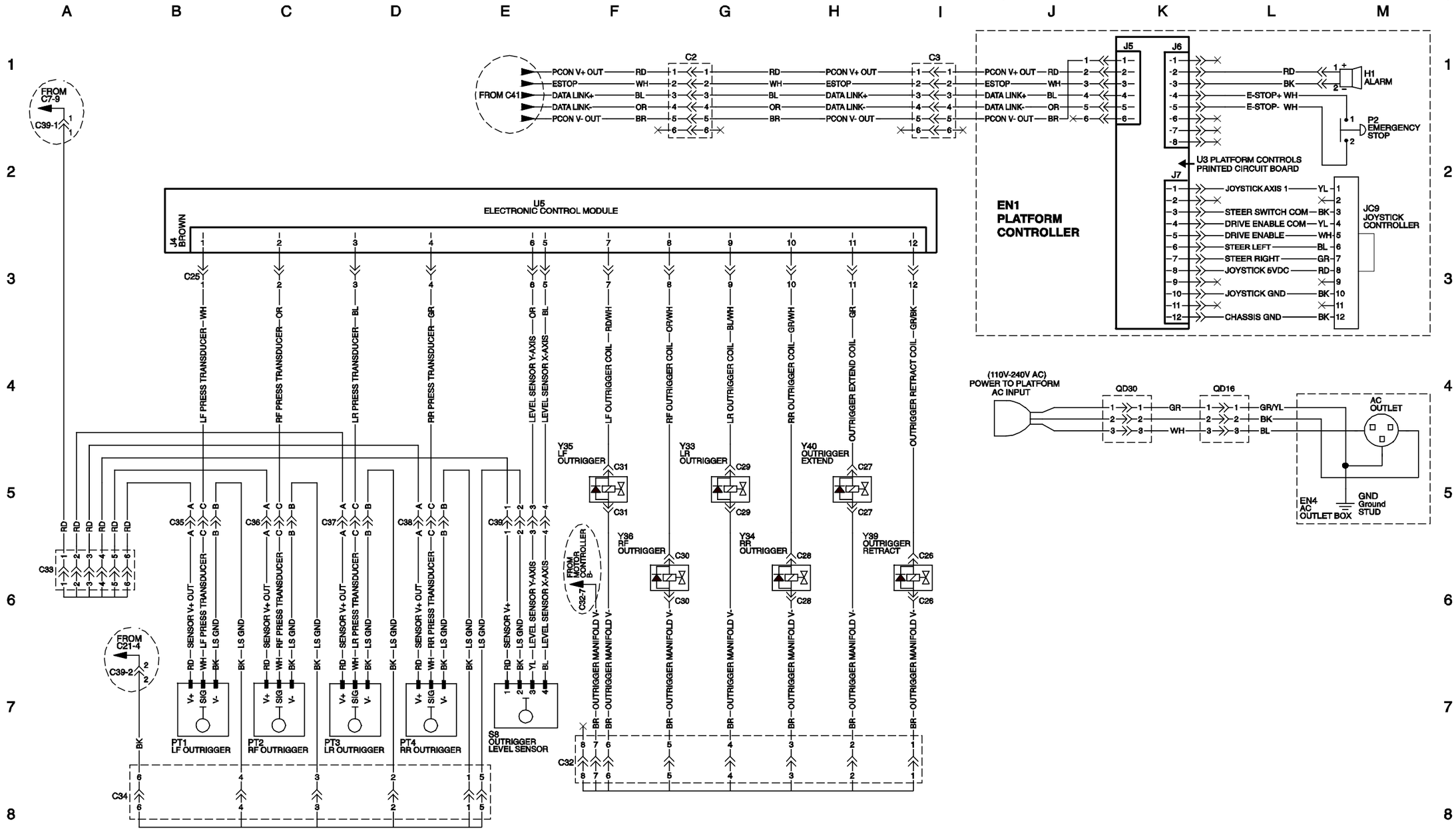

https://truckmanualshub.com/

Electrical Schematic, GS-3232, ANSI / CSA

(from serial number GS3211A-110000 to GS3214A-135714)

https://truckmanualshub.com/

Electrical Schematic, GS-3232, ANSI / CSA

(from serial number GS3214A-135715 to GS3215A-141898)

https://truckmanualshub.com/

Electrical Schematic, GS-3232, ANSI / CSA

(from serial number GS3214A-135715 to GS3215A-141898)

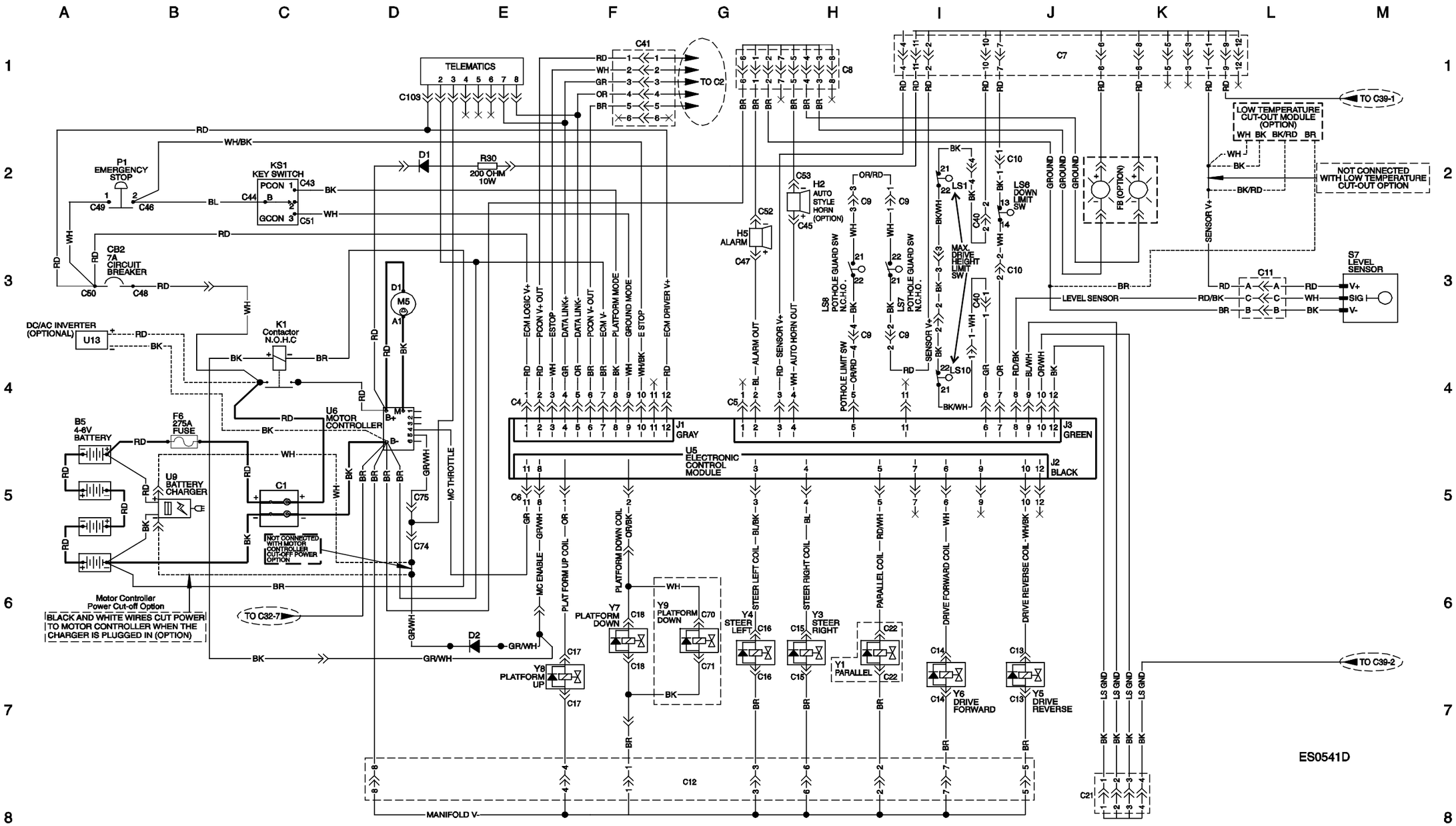

https://truckmanualshub.com/

Electrical Schematic, GS-3232, ANSI / CSA

(from serial number GS3214A-135715 to GS3215A-141898)

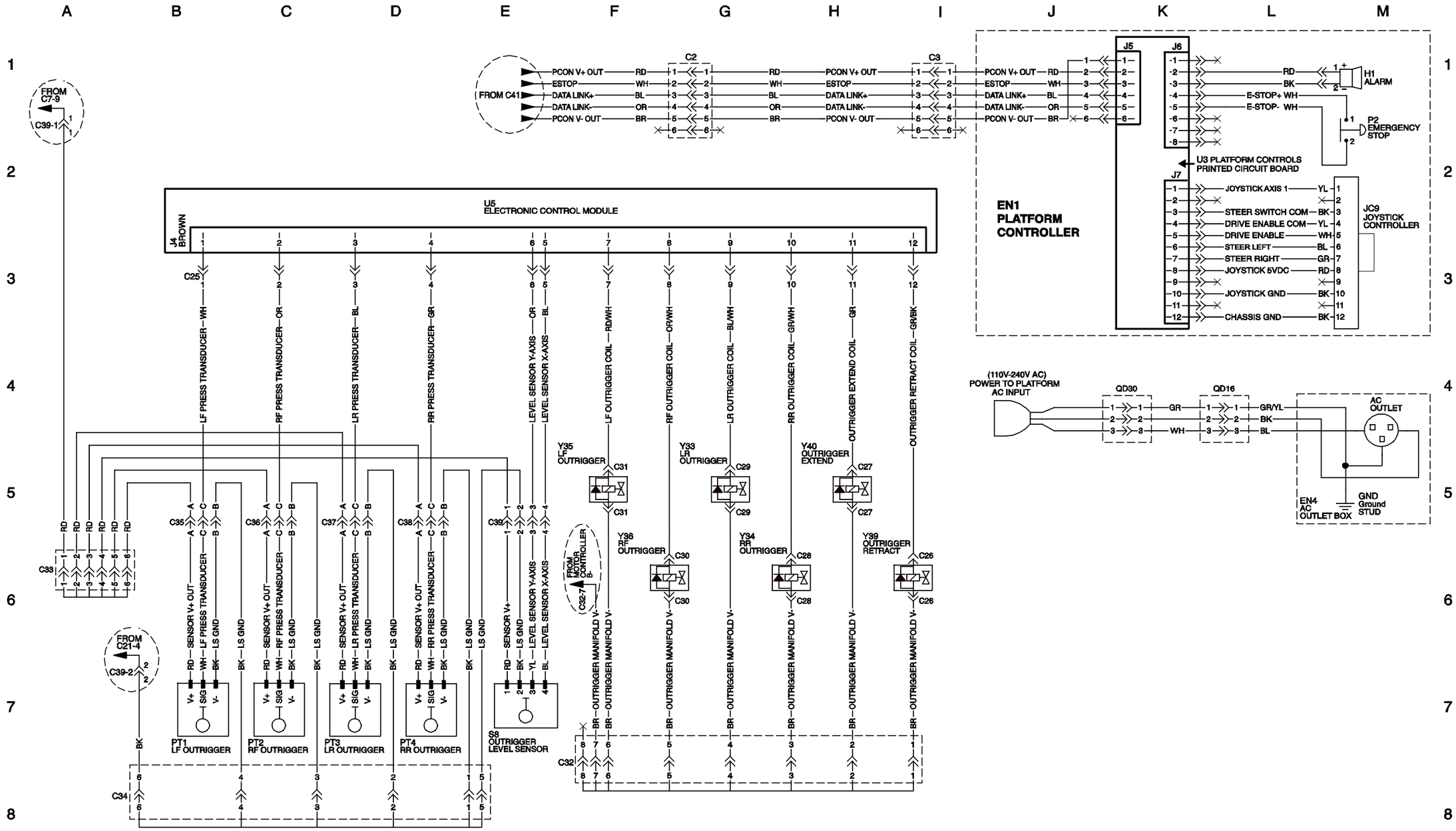

https://truckmanualshub.com/

Electrical Schematic, GS-3232, ANSI / CSA

(from serial number GS3214A-135715 to GS3215A-141898)

https://truckmanualshub.com/

Electrical Schematic, GS-3232, ANSI / CSA

(from serial numbers GS3215A-141899, GS3216P-142677 to GS3216P-146462)

https://truckmanualshub.com/

Electrical Schematic, GS-3232, ANSI / CSA

(from serial numbers GS3215A-141899, GS3216P-142677 to GS3216P-146462)

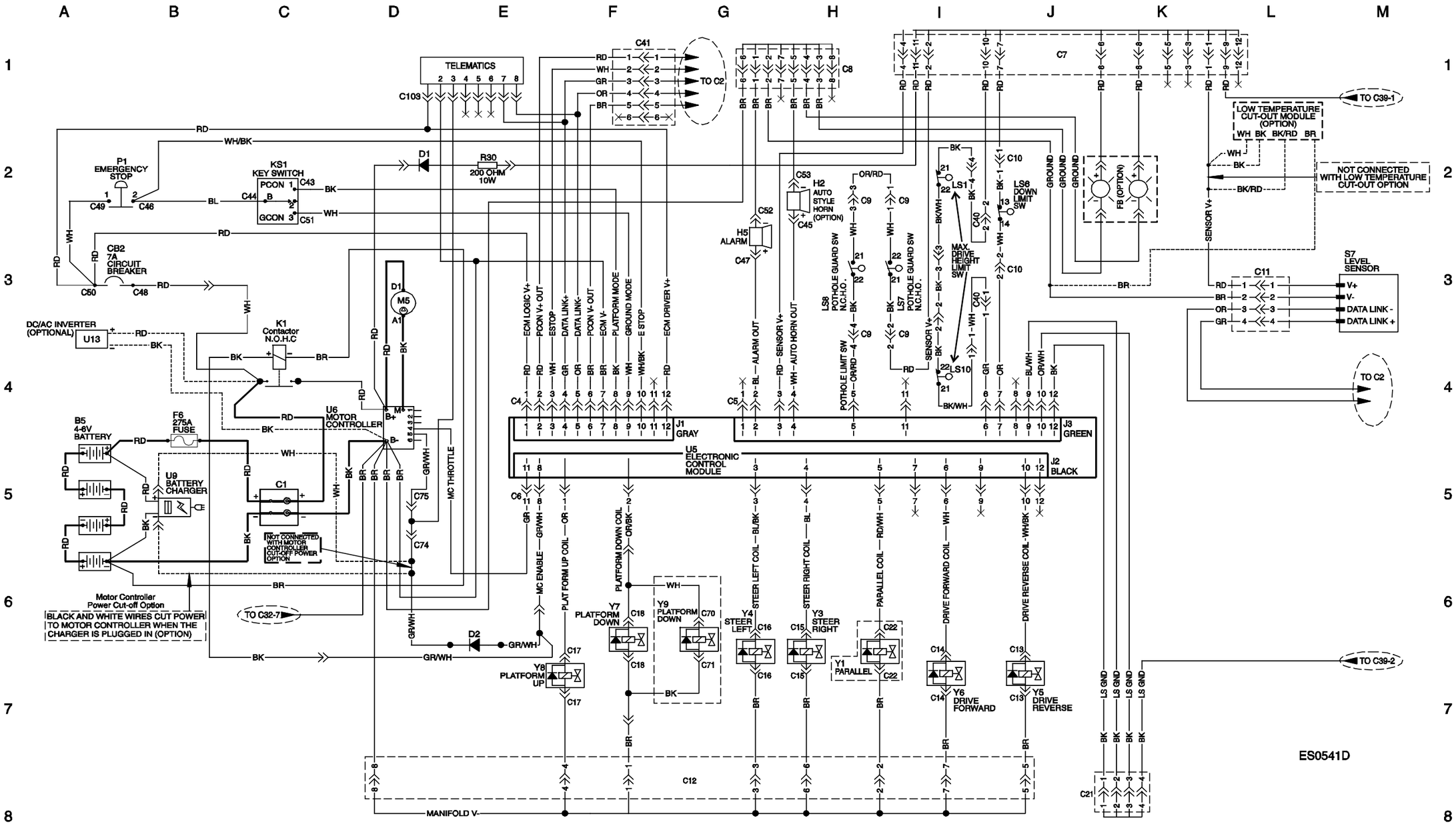

https://truckmanualshub.com/

Electrical Schematic, GS-3232, ANSI / CSA

(from serial numbers GS3215A-141899, GS3216P-142677 to GS3216P-146462)

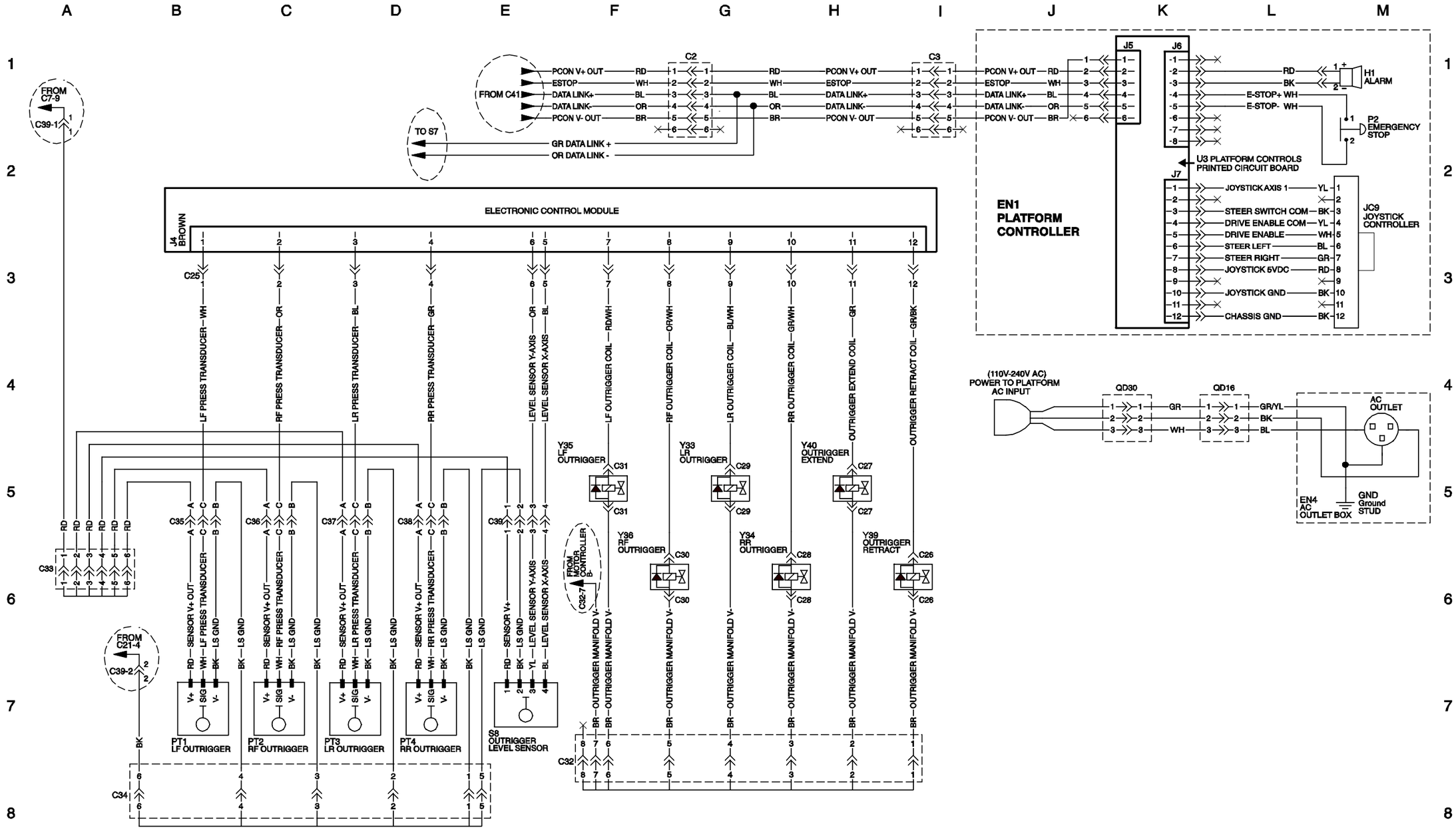

https://truckmanualshub.com/

Electrical Schematic, GS-3232, ANSI / CSA

(from serial numbers GS3215A-141899, GS3216P-142677 to GS3216P-146462)

https://truckmanualshub.com/

Electrical Schematic, GS-3232, ANSI / CSA

(from serial number GS3216P-146463)

https://truckmanualshub.com/

Electrical Schematic, GS-3232, ANSI / CSA

(from serial numbers GS3216P-146463)

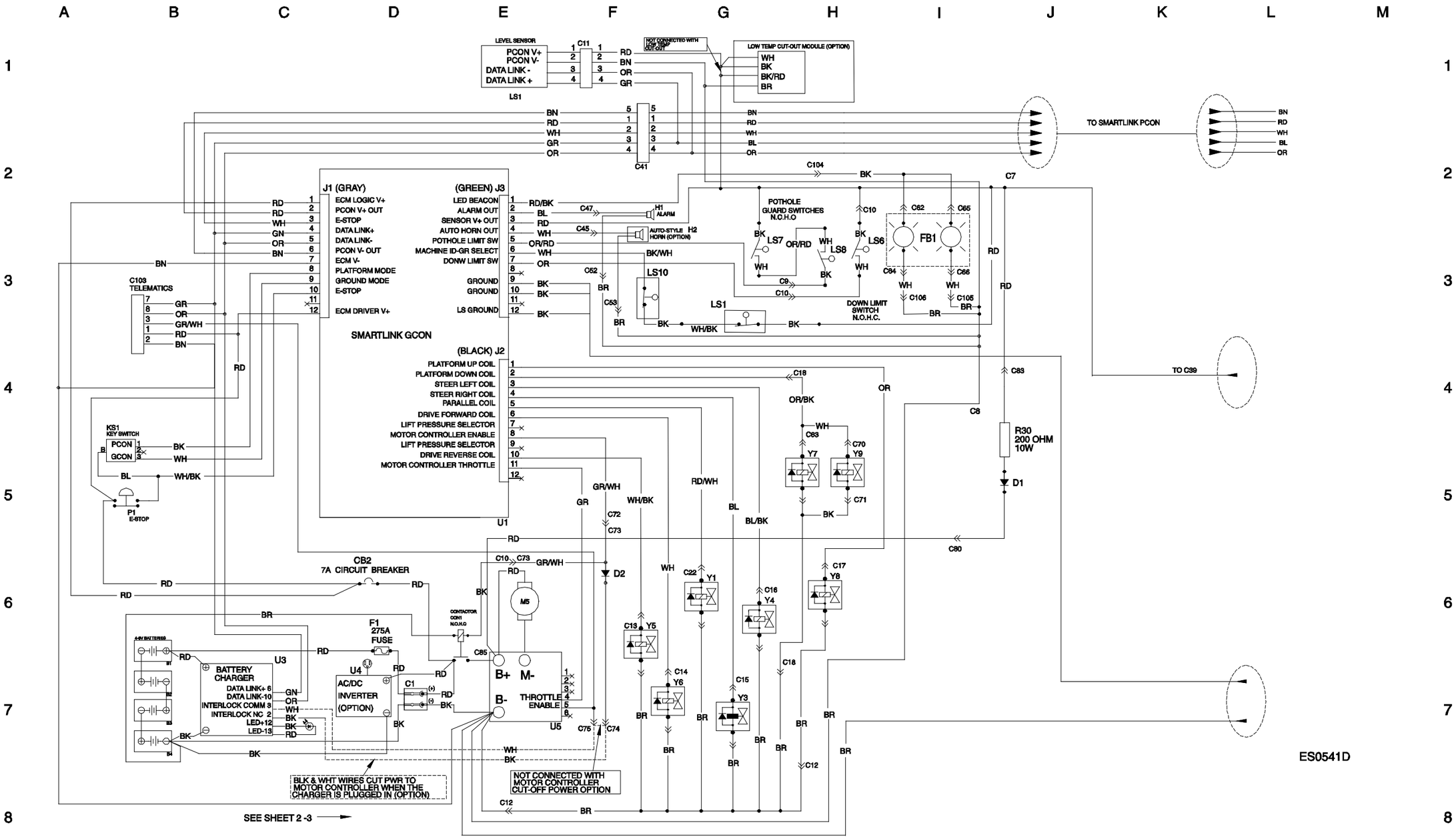

https://truckmanualshub.com/

Electrical Schematic, GS-3232, ANSI / CSA

(from serial number GS3216P-146463)

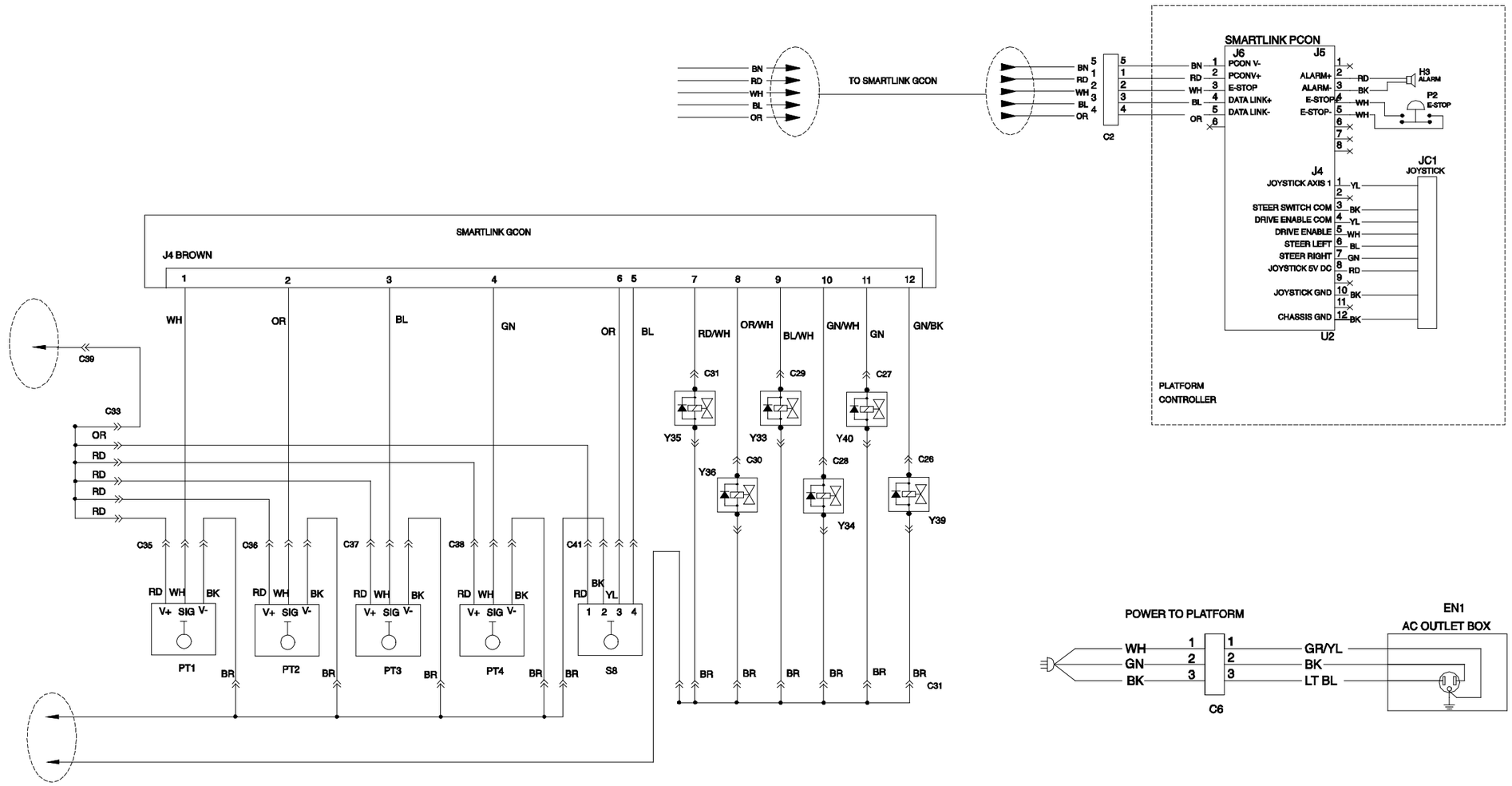

https://truckmanualshub.com/

Electrical Schematic, GS-3232, ANSI / CSA

(from serial number GS3216P-146463)

https://truckmanualshub.com/

Electrical Schematic, GS-2032, 2632, 2046, 2646, ANSI / CSA

(from serial numbers GS3211A-110000 to GS3214A-135714, GS4612A-110000 to GS4614A-135366, GS4613D-101 to GS4615D-1303)

https://truckmanualshub.com/

Electrical Schematic, GS-2032, 2632, 2046, 2646, ANSI / CSA

(from serial numbers GS3211A-110000 to GS3214A-135714, GS4612A-110000 to GS4614A-135366, GS4613D-101 to GS4615D-1303)

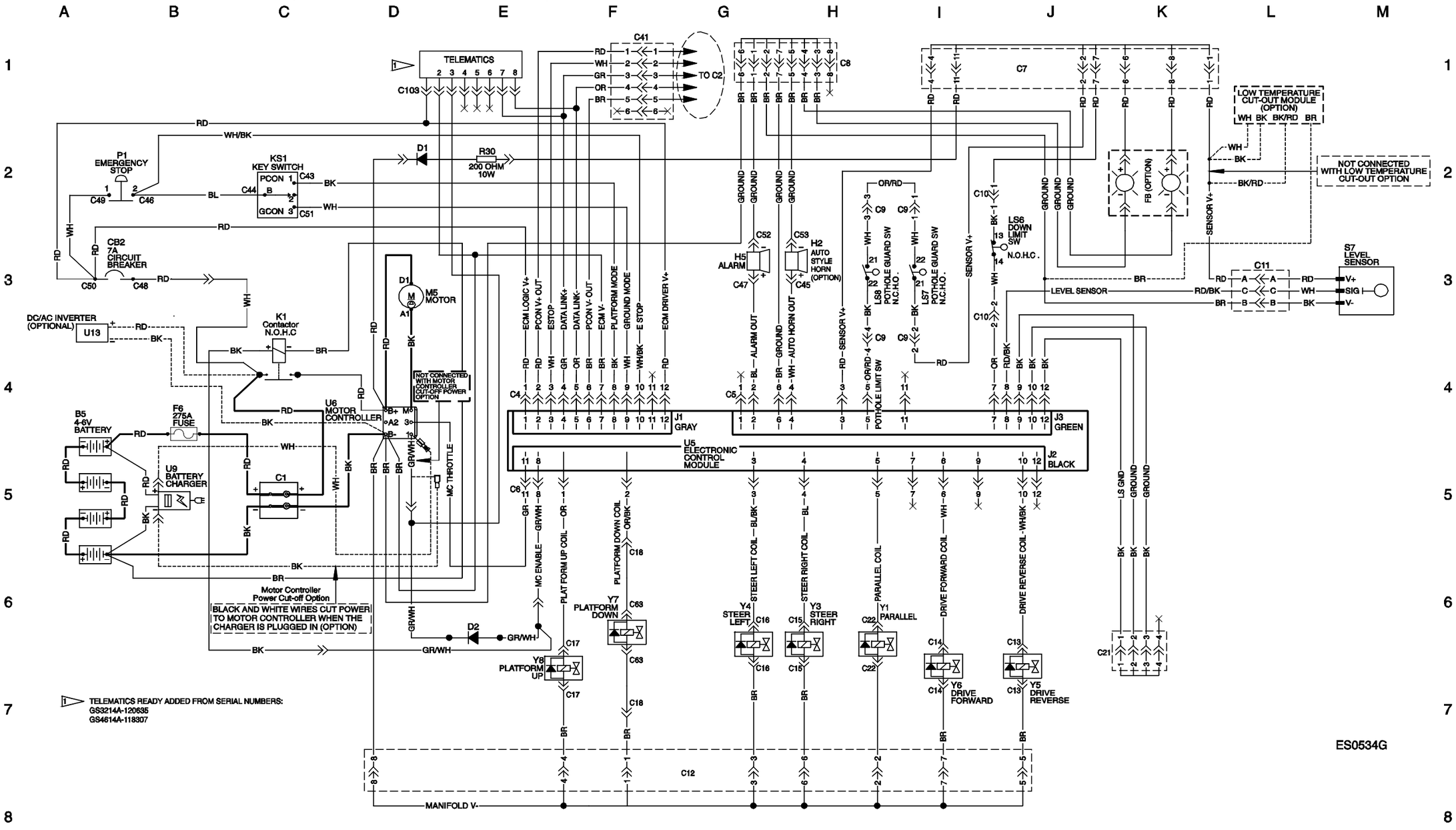

https://truckmanualshub.com/

Electrical Schematic, GS-2032, 2632, 2046, 2646, ANSI / CSA

(from serial numbers GS3211-110000 to GS3214A-135714, GS4612A-110000 to GS4614A-135366, GS4613D-101 to GS4615D-1303)

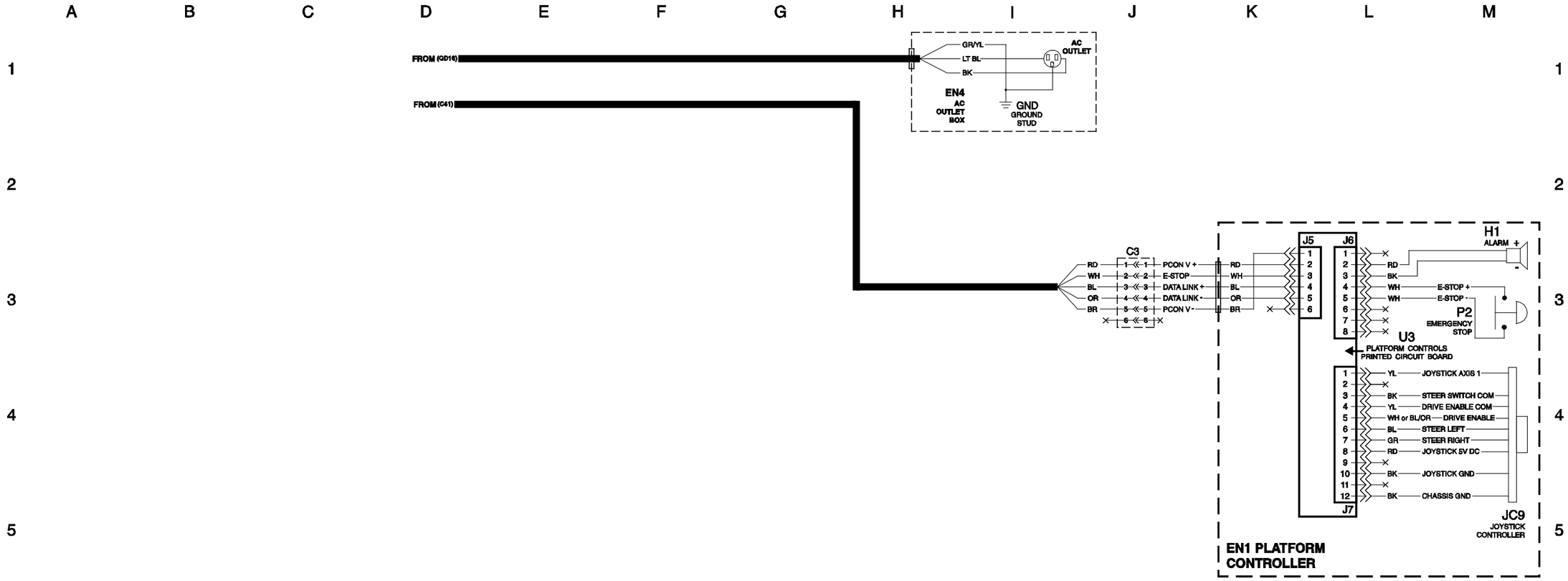

https://truckmanualshub.com/

Electrical Schematic, GS-2032, 2632, 2046, 2646, ANSI / CSA

**(from serial numbers GS3211A-110000 to GS3214A-135714,
GS4612A-110000 to GS4614A-135366, GS4613D-101 to GS4615D-1303)**

https://truckmanualshub.com/

Electrical Schematic, GS-2032, 2632, 2046, 2646, ANSI / CSA

(from serial numbers GS3214A-135715 to GS3215A-141898, GS4614A-135367 to GS4615A-137959, GS4615D-1304)

https://truckmanualshub.com/

Electrical Schematic, GS-2032, GS-2632, 2046, 2646, ANSI / CSA

(from serial numbers GS3214A-135715 to GS3215A-141898, GS4614A-135367 to GS4615A-137959, GS4615D-1304)

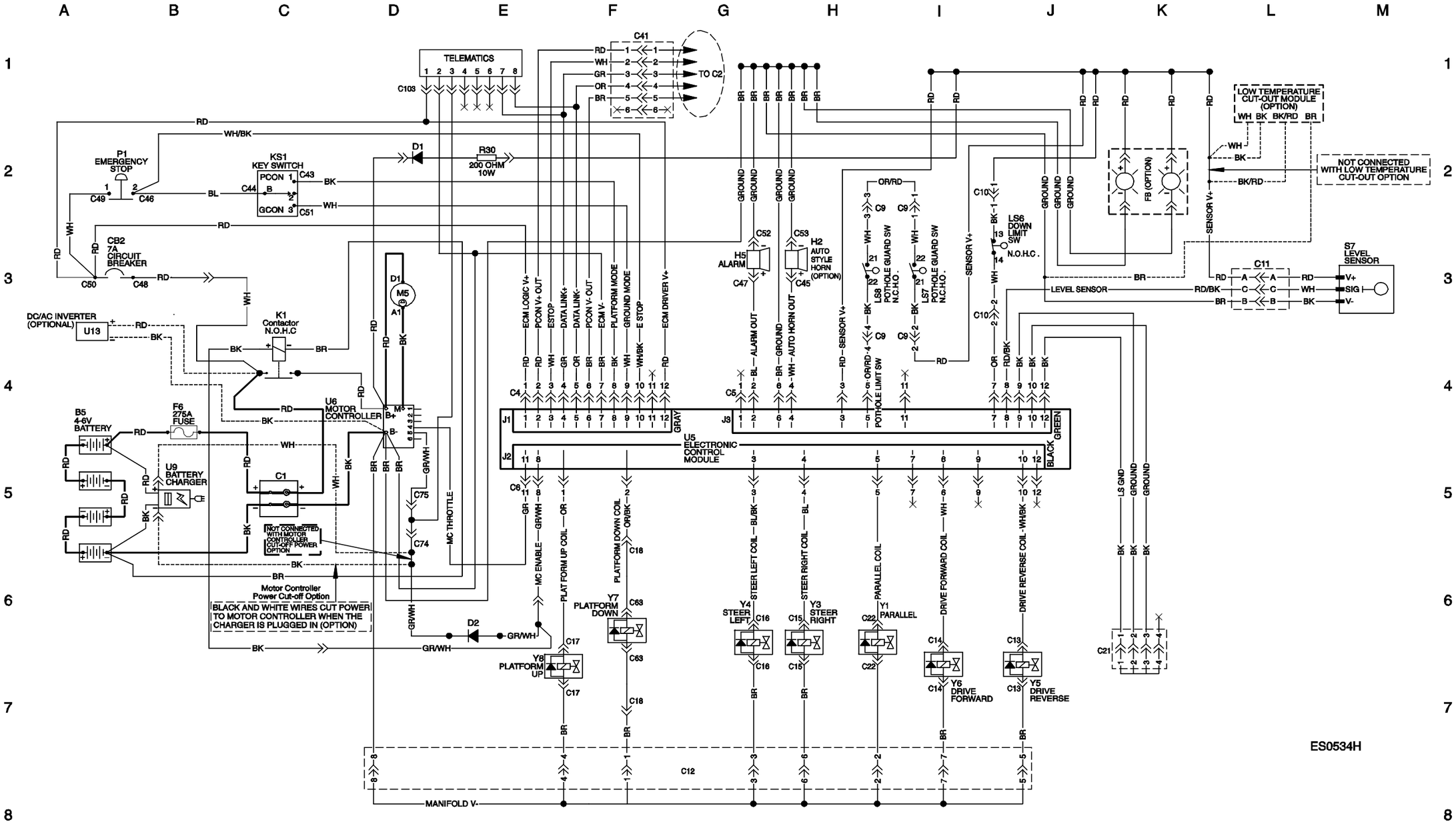

https://truckmanualshub.com/

Electrical Schematic, GS-2032, 2632, 2046, 2646, ANSI / CSA

(from serial numbers GS3214A-1135715 to GS3215A-1141898, GS4614A-135367 to GS4615A-137959, GS4615D-1304)

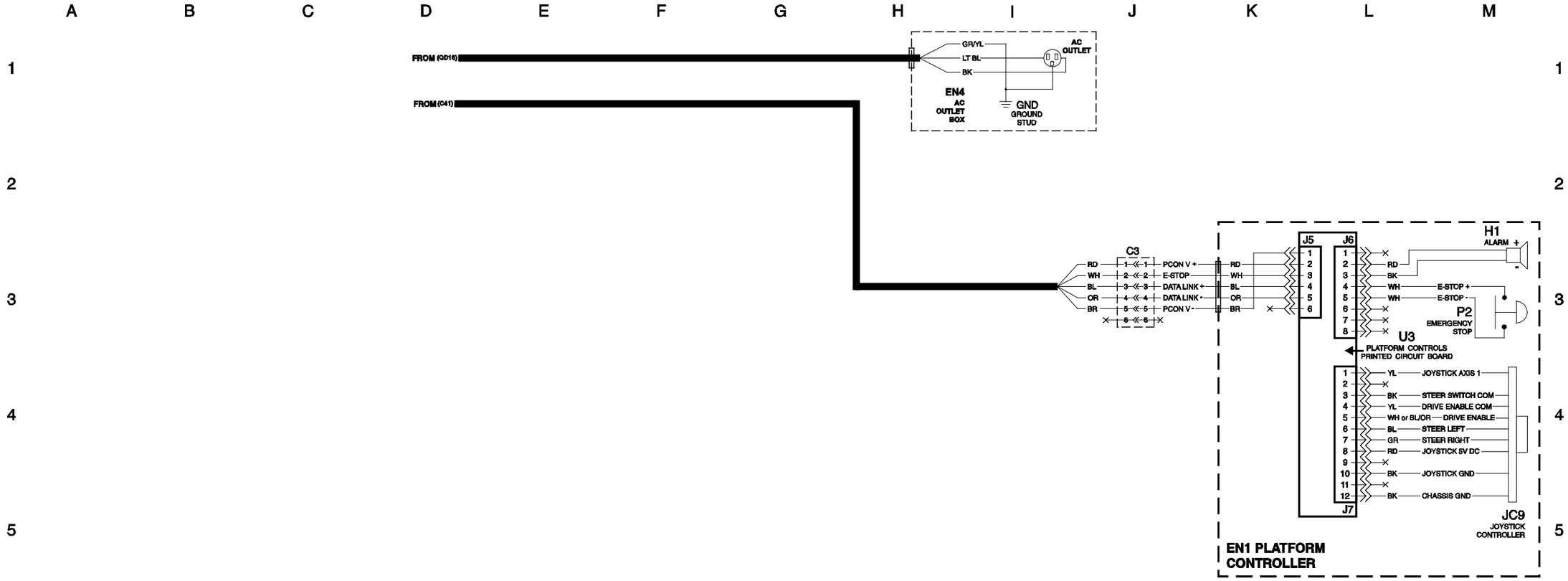

https://truckmanualshub.com/

Electrical Schematic, GS-2032, 2632, 2046, 2646, ANSI / CSA

(from serial numbers GS3214A-135715 to GS3215A-141898, GS4614A-135367 to GS4615A-137959, GS4615D-1304)

https://truckmanualshub.com/

Electrical Schematic, GS-2032, 2632, 2046, 2646, ANSI / CSA

(from serial numbers GS3215A-141899, GS3216P-142676 to GS3216P-146462, GS4615A-137960, GS4615D-1305 to GS4616D-4432, GS4616P-138362 to GS4616P-139710)

https://truckmanualshub.com/

Electrical Schematic, GS-2032, 2632, 2046, 2646, ANSI / CSA

(from serial numbers GS3215A-141899, GS3216P-142676 to GS3216P-146462, GS4615A-137960, GS4615D-1305 to GS4616D-4432, GS4616P-138362 to GS4616P-139710)

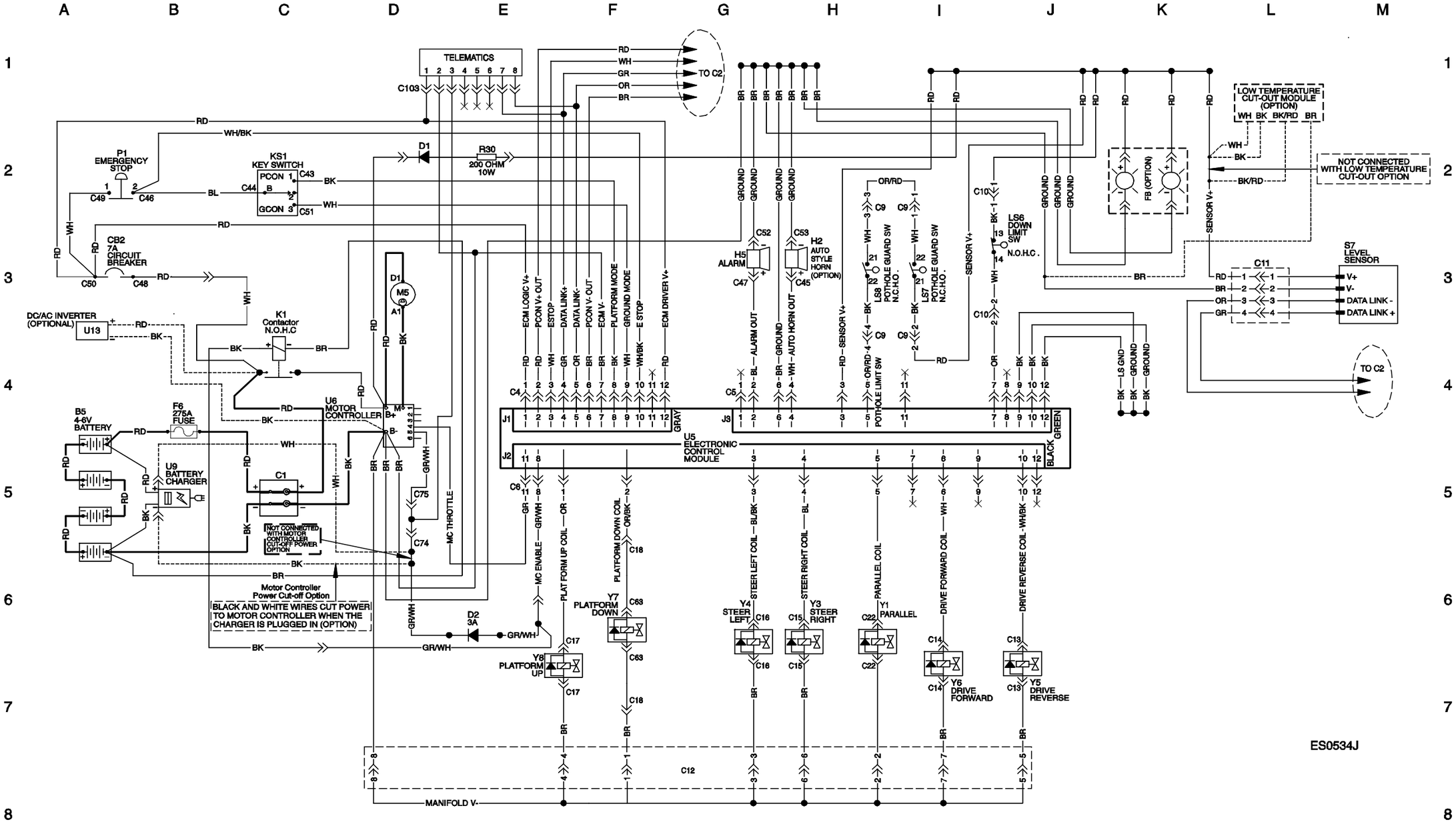

https://truckmanualshub.com/

Electrical Schematic, GS-2032, 2632, 2046, 2646, ANSI / CSA

(from serial numbers GS3215A-141899, GS3216P-142676 to GS3216P-146462, GS4615A-137960, GS4615D-1305 to GS4616D-4432, GS4616P-138362 to GS4616P-139710)

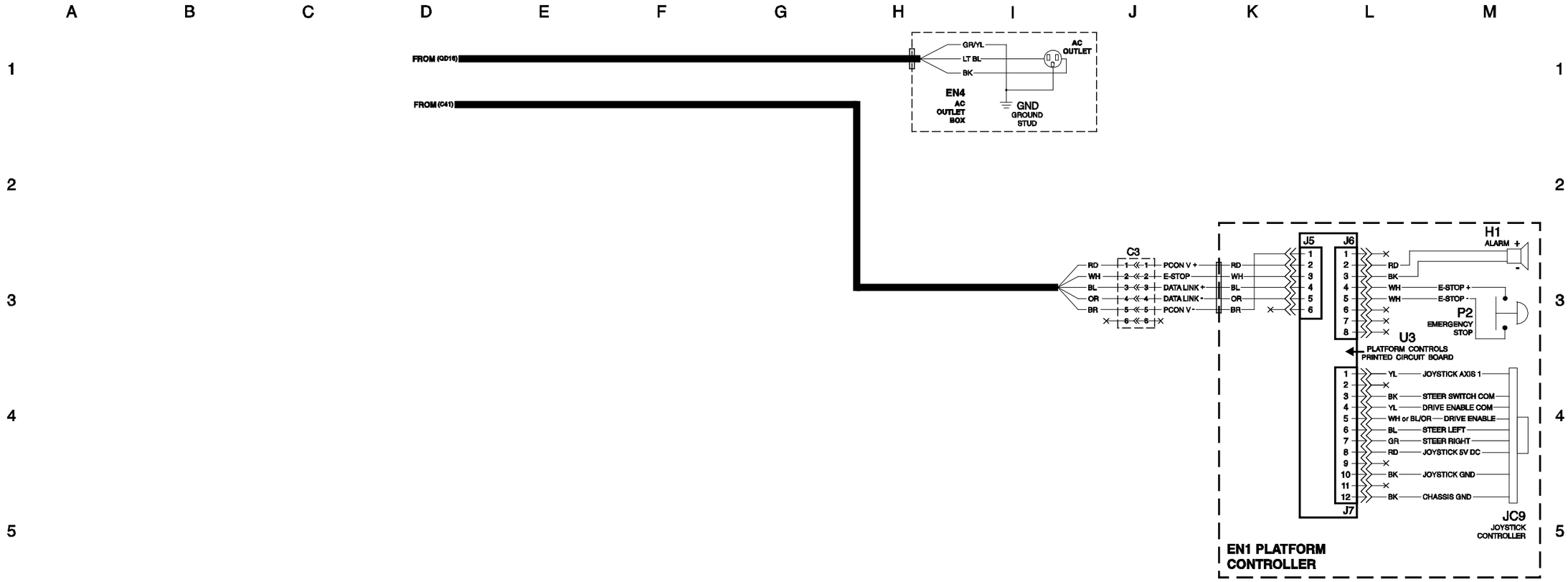

https://truckmanualshub.com/

Electrical Schematic, GS-2032, 2632, 2046, 2646, ANSI / CSA

(from serial numbers GS3215A-14189, GS3216P-142676 to GS3216P-146462, GS4615A-137960, GS4615D-1305 to GS4616D-4432, GS4616P-138362 to GS4616P-139710)

https://truckmanualshub.com/

Electrical Schematic, GS-2032, 2632, 2046, 2646, ANSI / CSA

(from serial numbers, GS3216P-146463, GS4616D-4433, GS4616P-139711)

https://truckmanualshub.com/

Electrical Schematic, GS-2032, 2632, 2046, 2646, ANSI / CSA

(from serial numbers GS3216P-146463, GS4616D-4433, GS4616P-139711)

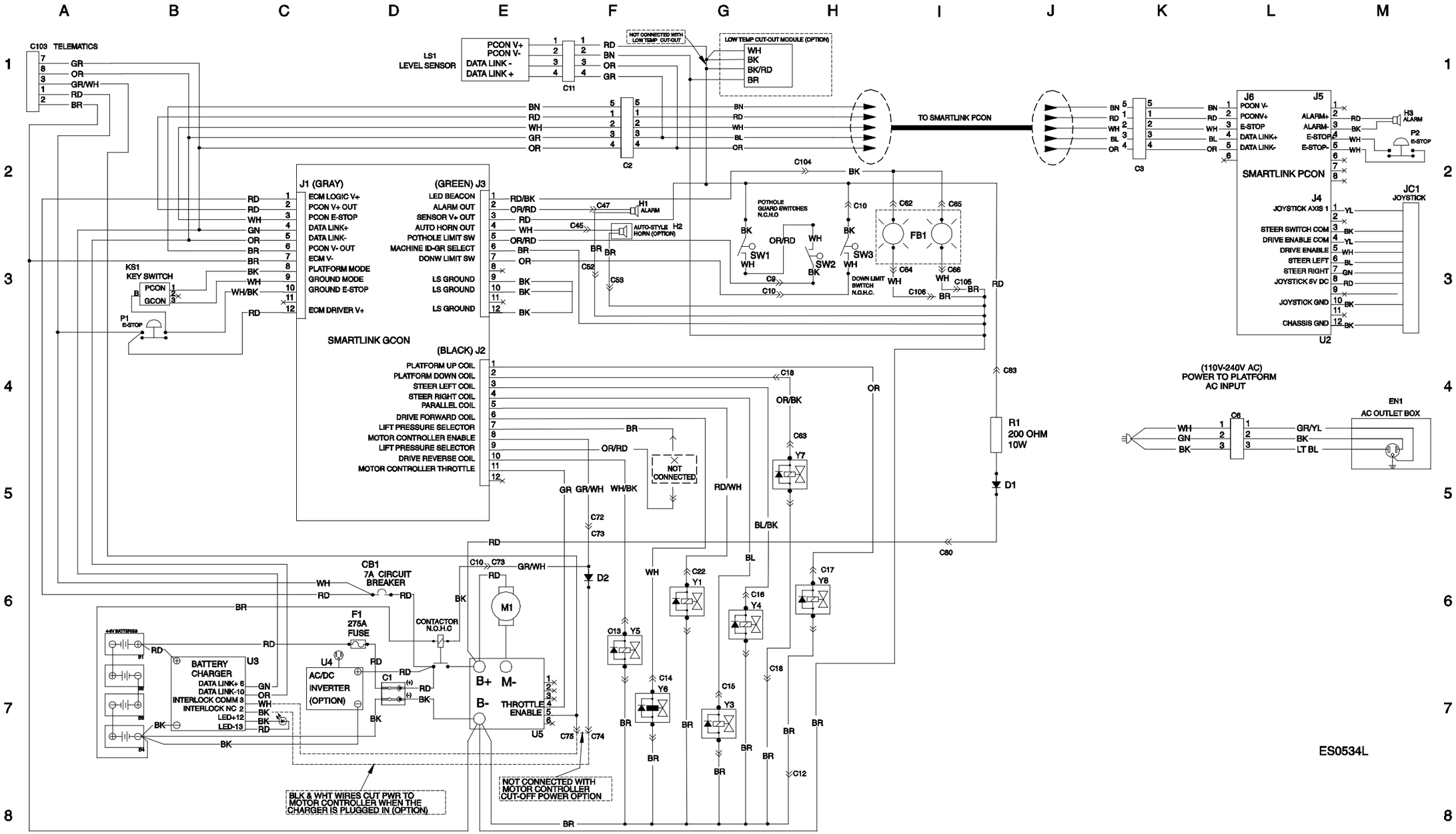

https://truckmanualshub.com/

Electrical Schematic, GS-3246 / GS-4047, ANSI / CSA

(from serial numbers GS4612A-110000 to GS4614A-135366, GS4614D-101 to GS4615D-1303, GS4714D-101 to GS4715D-749)

https://truckmanualshub.com/

Electrical Schematic, GS-3246 / GS-4047, ANSI / CSA

(from serial numbers GS4612A-110000 to GS4614A-135366, GS4614D-101 to GS4615D-1303, GS4714D-101 to GS4715D-749)

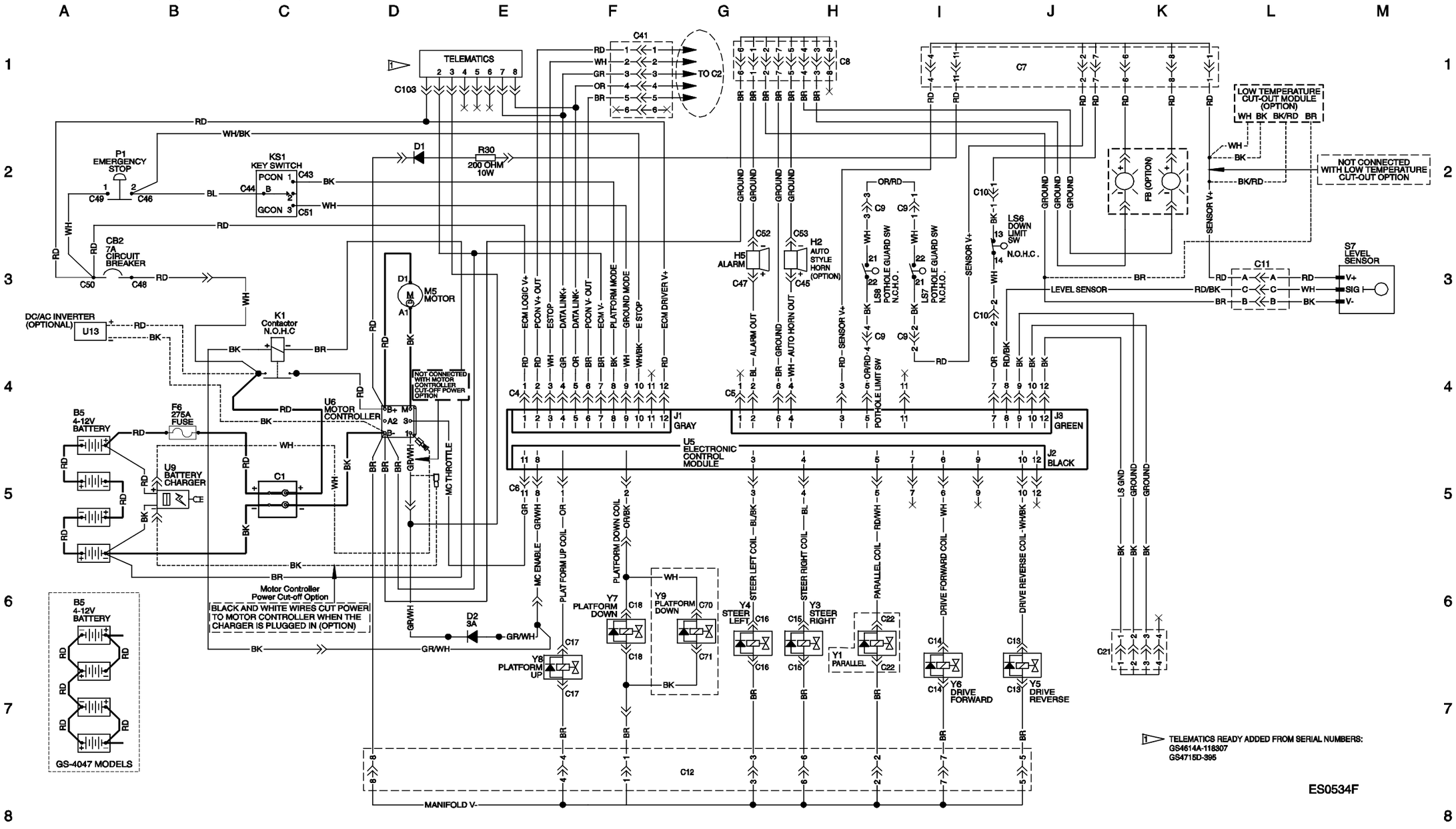

https://truckmanualshub.com/

Electrical Schematic, GS-3246 / GS-4047, ANSI / CSA

(from serial numbers GS4621A-110000 to GS4614A-135366, GS4614D-101 to GS4615D-1303, GS4714D-101 to GS4715D-749)

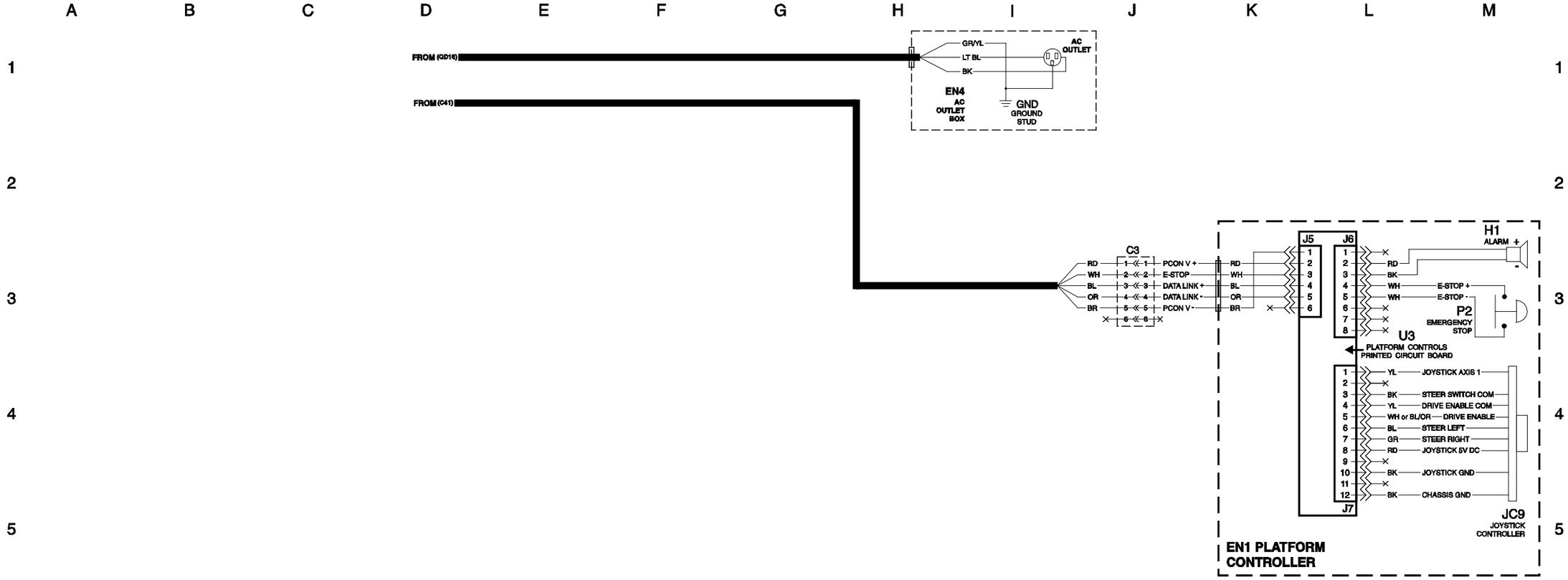

https://truckmanualshub.com/

Electrical Schematic, GS-3246 / GS-4047, ANSI / CSA

(from serial numbers GS4612A-110000 to GS4614A-135366, GS4614D-101 to GS4615D-1303, GS4714D-101 to GS4715D-749)

https://truckmanualshub.com/

Electrical Schematic, GS-3246 / GS-4047, ANSI / CSA

(from serial numbers GS4614A-135367 to GS4615A-137959, GS4615D-1304 to GS4616D-4432, GS4616P-138362 to GS4616P-139710, GS4715D-750 to GS4716D-3101)

https://truckmanualshub.com/

Electrical Schematic, GS-3246 / GS-4047, ANSI / CSA

(from serial numbers GS4614A-135367 to GS4615A-137959, GS4615D-1304 to GS4616D-4432, GS4616P-138362 to GS4616P-139710, GS4715D-750 to GS4716D-3101)

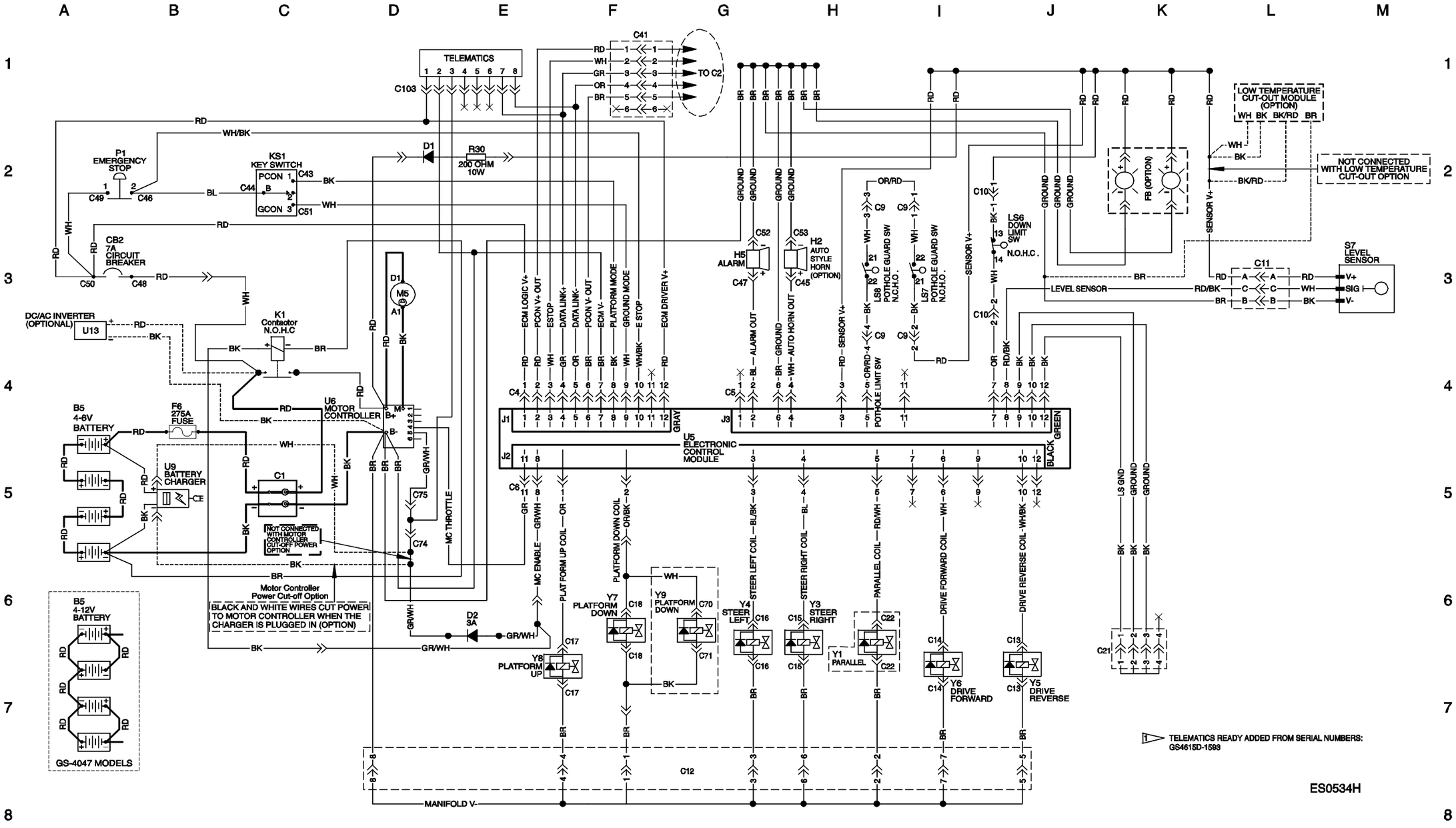

https://truckmanualshub.com/

Electrical Schematic, GS-3246 / GS-4047, ANSI / CSA

(from serial numbers GS4614A-135367 to GS4615A-137959, GS4615D-1304 to GS4616D-4432, GS4616P-138362 to GS4616P-139710, GS4715D-750 to GS4716D-3101)

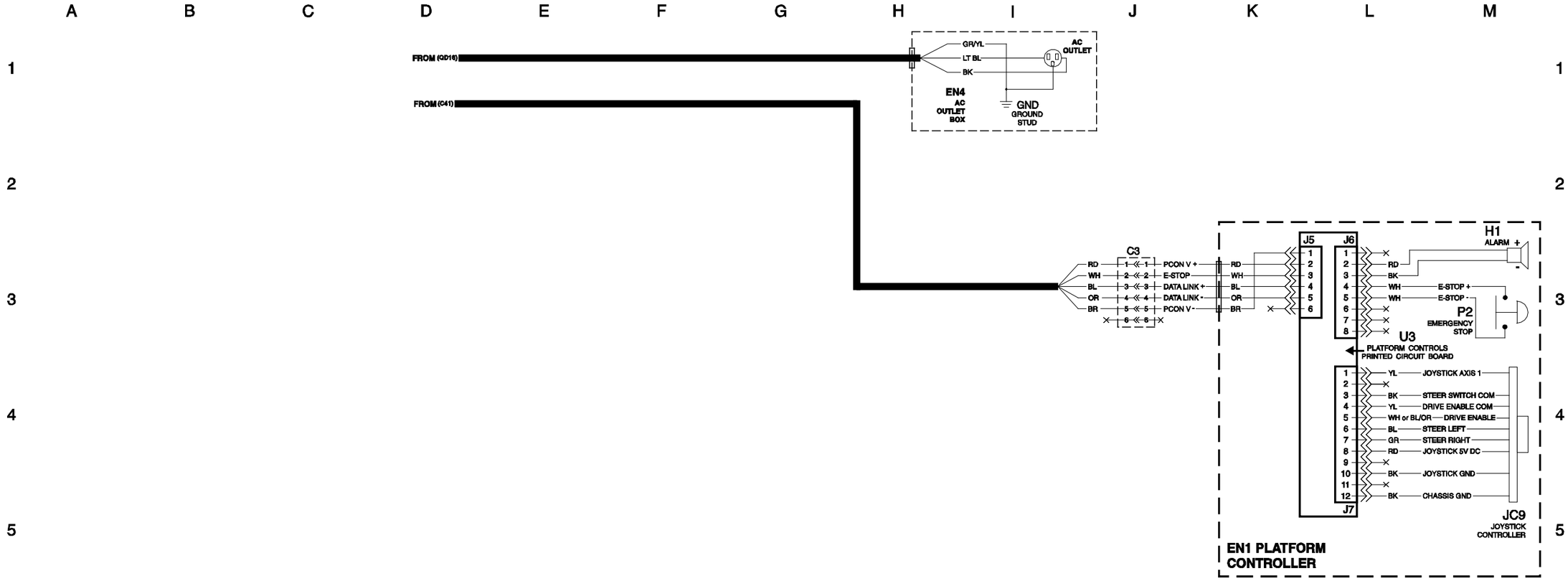

https://truckmanualshub.com/

Electrical Schematic, GS-3246 / GS-4047, ANSI / CSA

(from serial numbers GS4614A-135367 to GS4615A-137959, GS4615D-1304 to GS4616D-4432, GS4616P-138362 to GS4616P-139710, GS4715D-750 to GS4716D-3101)

https://truckmanualshub.com/

Electrical Schematic, GS-3246, GS-4047 ANSI / CSA

(from serial numbers GS4616D-4433, GS4616P-139711, GS4716D-3102, GS4716P-101)

https://truckmanualshub.com/

Electrical Schematic, GS-3246, GS-4047 ANSI / CSA

(from serial numbers GS4616D-4433, GS4616P-139711, GS4716D-3102, GS4716P-101)

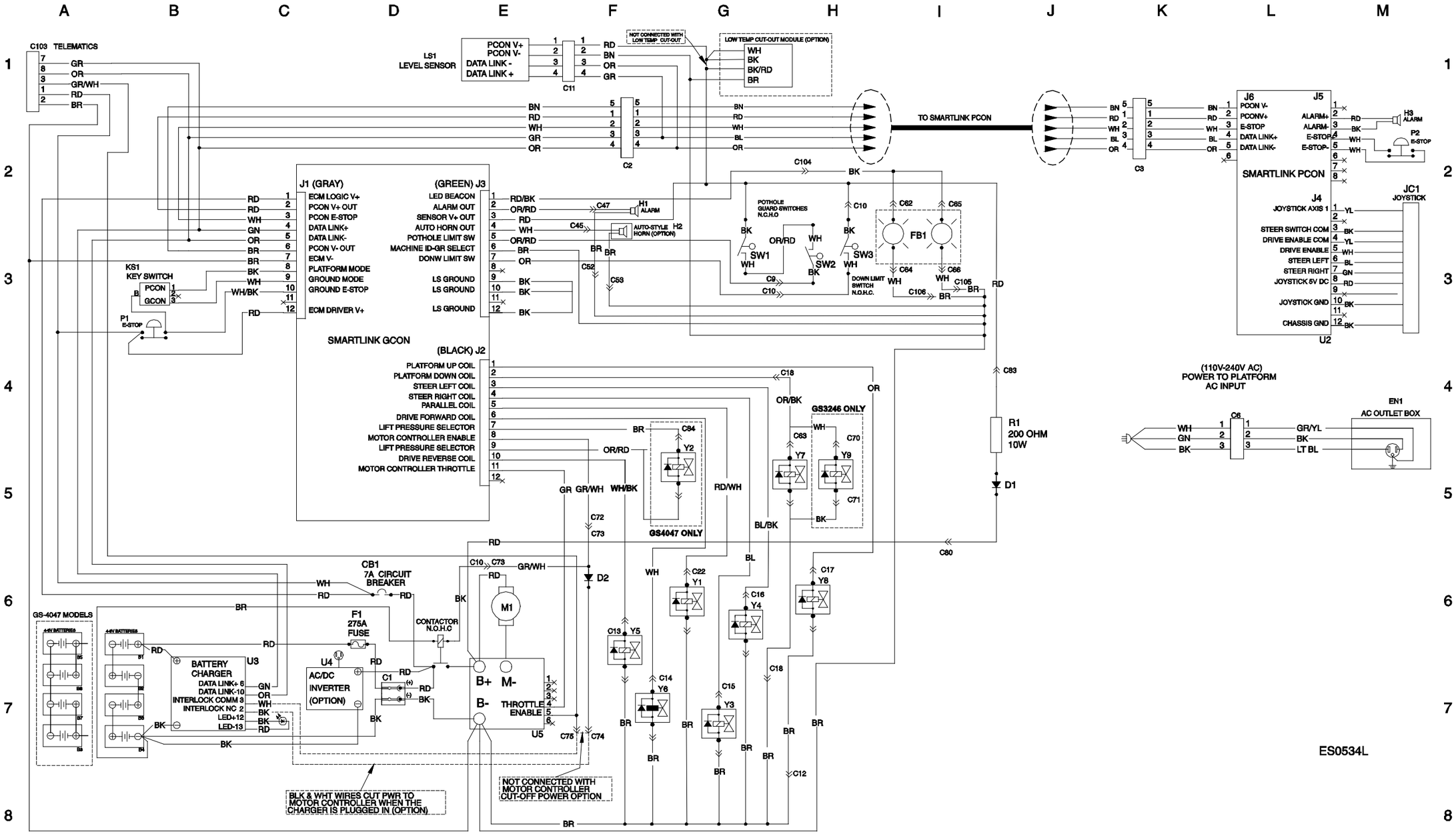

https://truckmanualshub.com/

Electrical Schematic, GS-1530, 1532, 1930, 1932, AS / CE

(from serial number GS3010A-110000 to GS3011A-110827)

https://truckmanualshub.com/

Electrical Schematic, GS-1530, 1532, 1930, 1932, AS / CE

(from serial number GS3010A-110000 to GS3011A-110827)

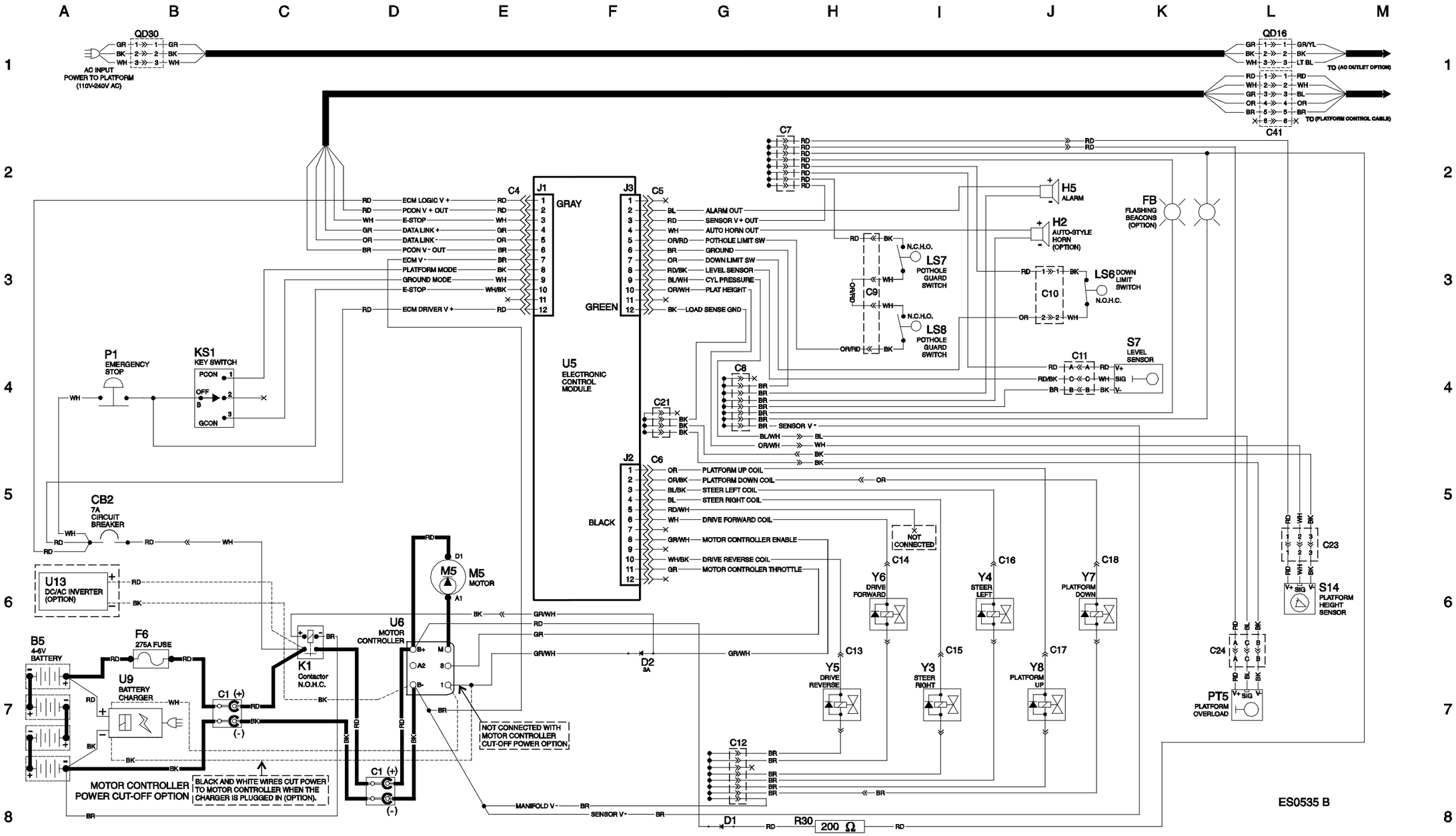

https://truckmanualshub.com/

Electrical Schematic, GS-1530, 1532, 1930, 1932, AS / CE

(from serial number GS3010A-110000 to GS3011A-110827)

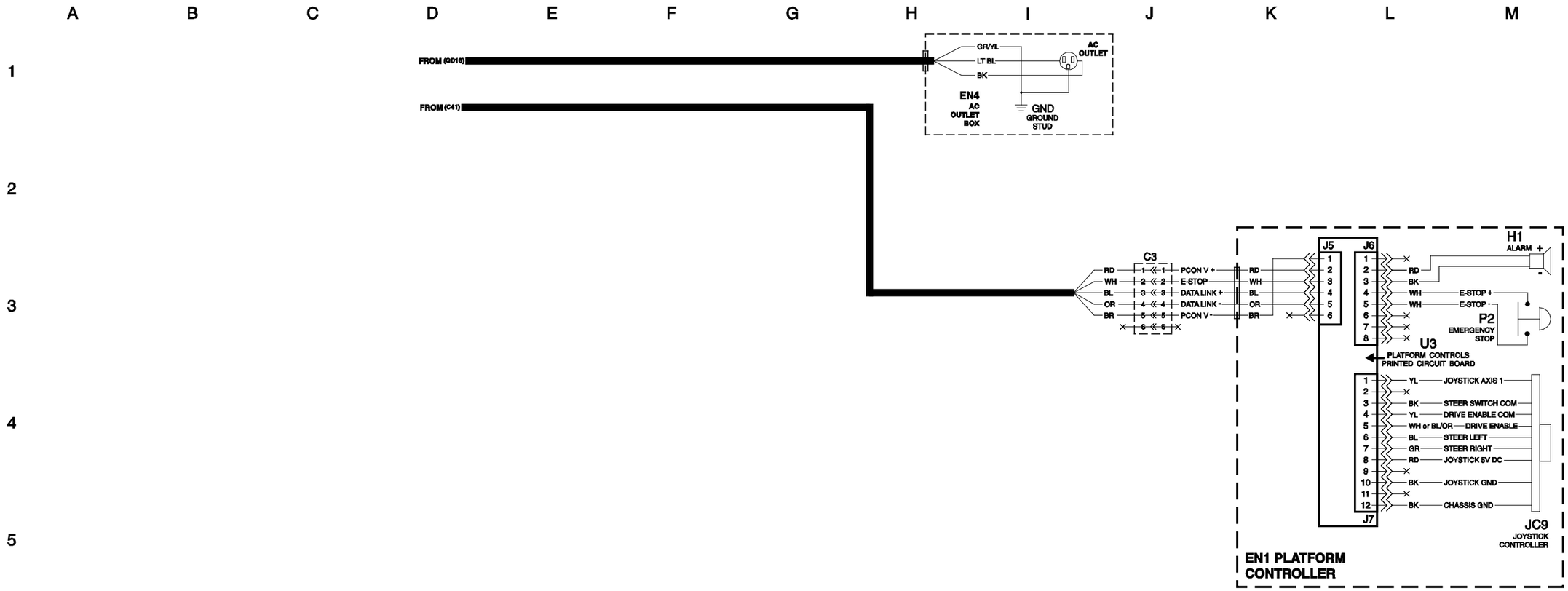

https://truckmanualshub.com/

Electrical Schematic, GS-1530, 1532, 1930, 1932, AS / CE

(from serial number GS3010A-110000 to GS3011A-110827)

https://truckmanualshub.com/

Electrical Schematic, GS-1530, 1530, 1930, 1932, AS / CE

(from serial numbers GS3011A-110828 to GS3014A-136972, GS3011C-10000 to GS3015C-18038, GS3014D-101 to GS3015D-1113)

https://truckmanualshub.com/

Electrical Schematic, GS-1530, 1532, 1930, 1932, AS / CE

(from serial numbers GS3011A-110828 to GS3014A-136972, GS3011C-10000 to GS3015C-18038, GS3014D-101 to GS3015D-1113)

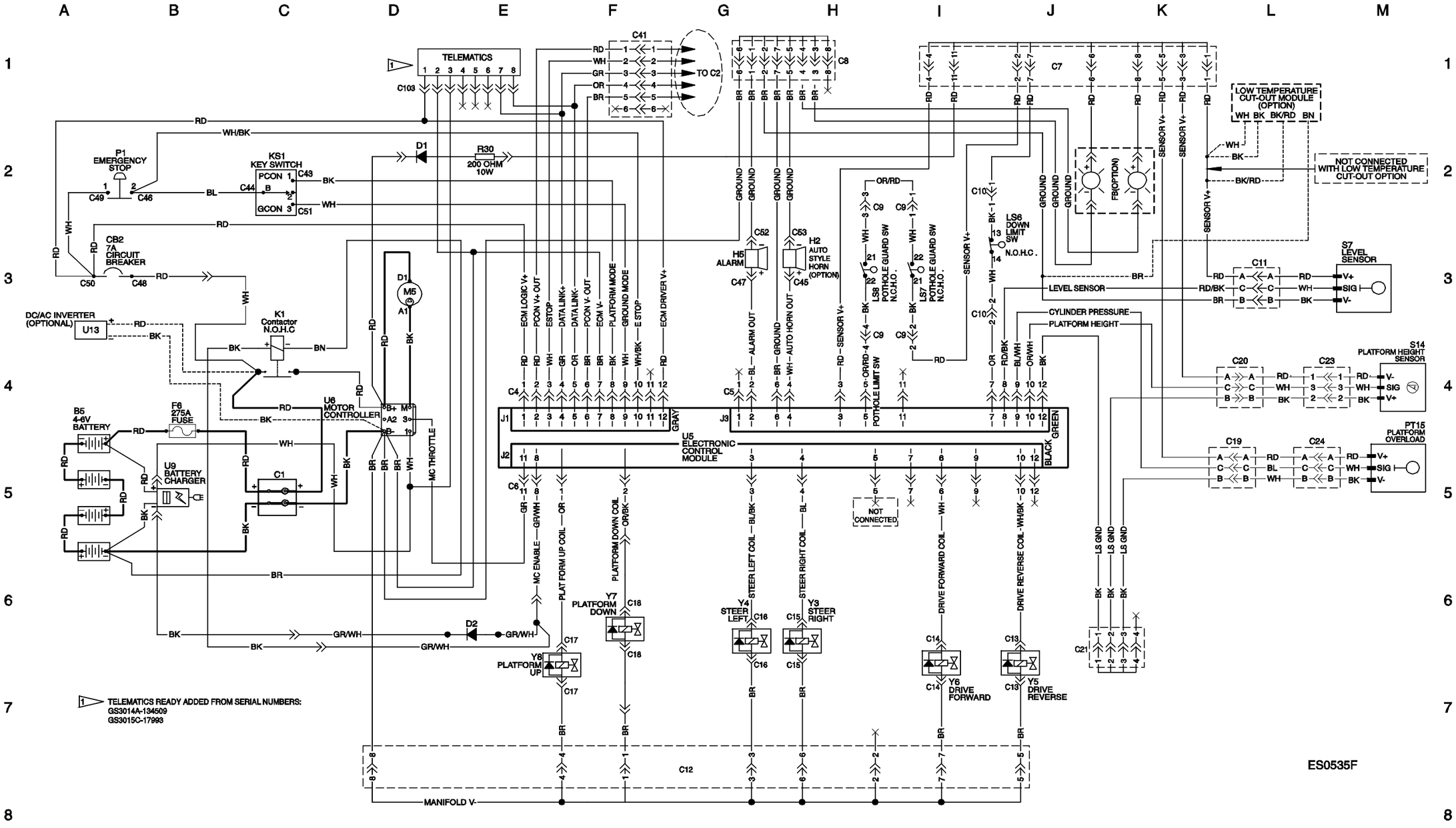

https://truckmanualshub.com/

Electrical Schematic, GS-1530, 1532, 1930, 1932, AS / CE

(from serial numbers GS3011A-110828 to GS3014A-136972, GS3011C-10000 to GS3015C-18038, GS3014D-101 to GS3015D-1113)

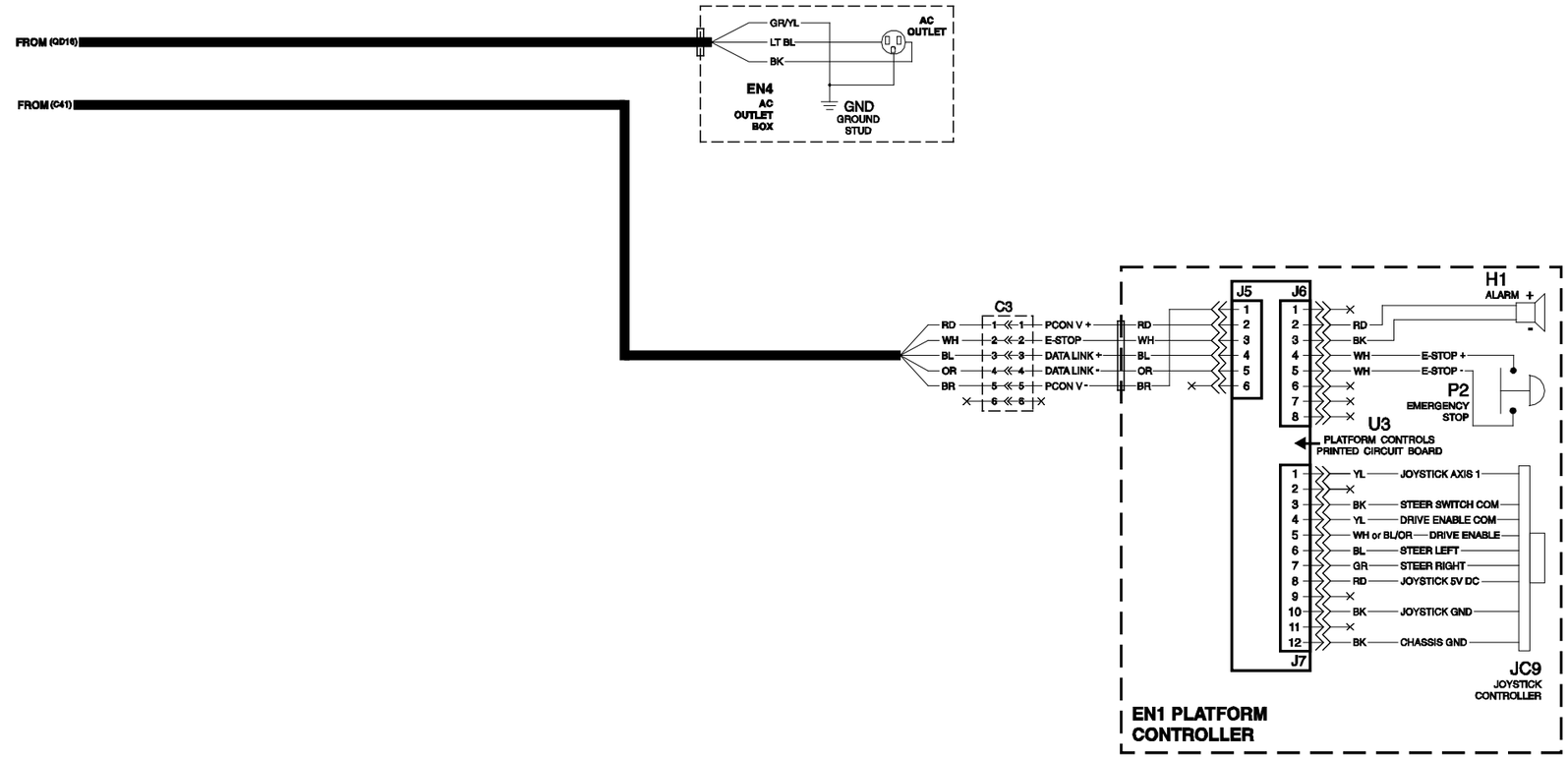

https://truckmanualshub.com/

Electrical Schematic, GS-1530, 1532, 1930, 1932, AS / CE

(from serial numbers GS3011A-110828 to GS3014A-136972, GS3011C-10000 to GS3015C-18038, GS3014D-101 to GS3015D-1113)

https://truckmanualshub.com/

Electrical Schematic, GS-1530, 1532, 1930, 1932, AS / CE

(from serial numbers GS3014A-136973, GS3015C-18039, GS3015D-1114 to GS3016D-5426, GS3016P-142281 to GS3016P-158208)

https://truckmanualshub.com/

Electrical Schematic, GS-1530, 1532, 1930, 1932, AS / CE

(from serial numbers GS3014A-136973, GS3015C-18039, GS3015D-1114 to GS3016D-5426, GS3016P-142281 to GS3016P-158208)

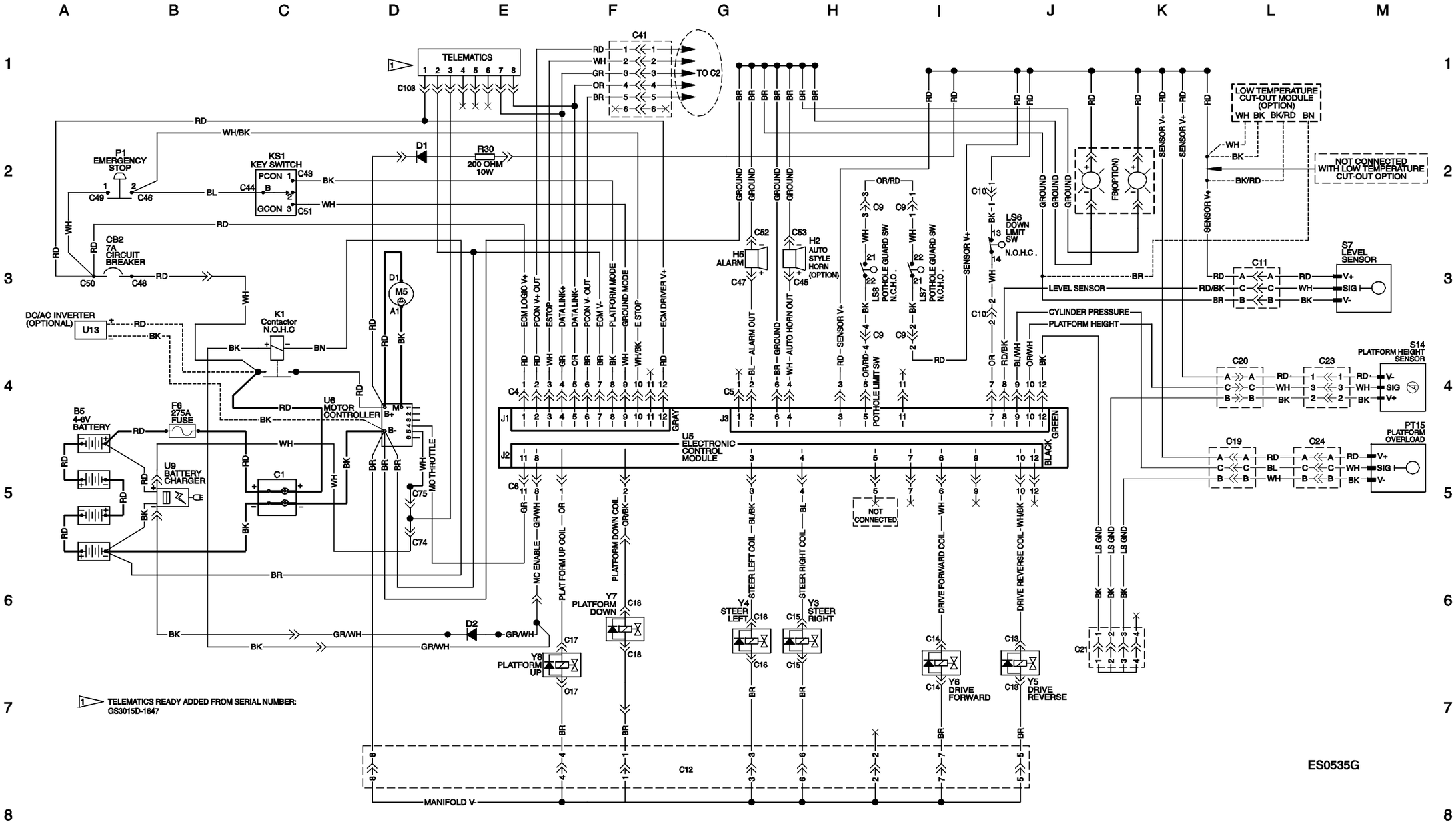

https://truckmanualshub.com/

Electrical Schematic, GS-1530, 1532, 1930, 1932, AS / CE

(from serial numbers GS3014A-136973, GS3015C-18039, GS3015D-1114 to GS3016D-5426, GS3016P-142281 to GS3016P-158208)

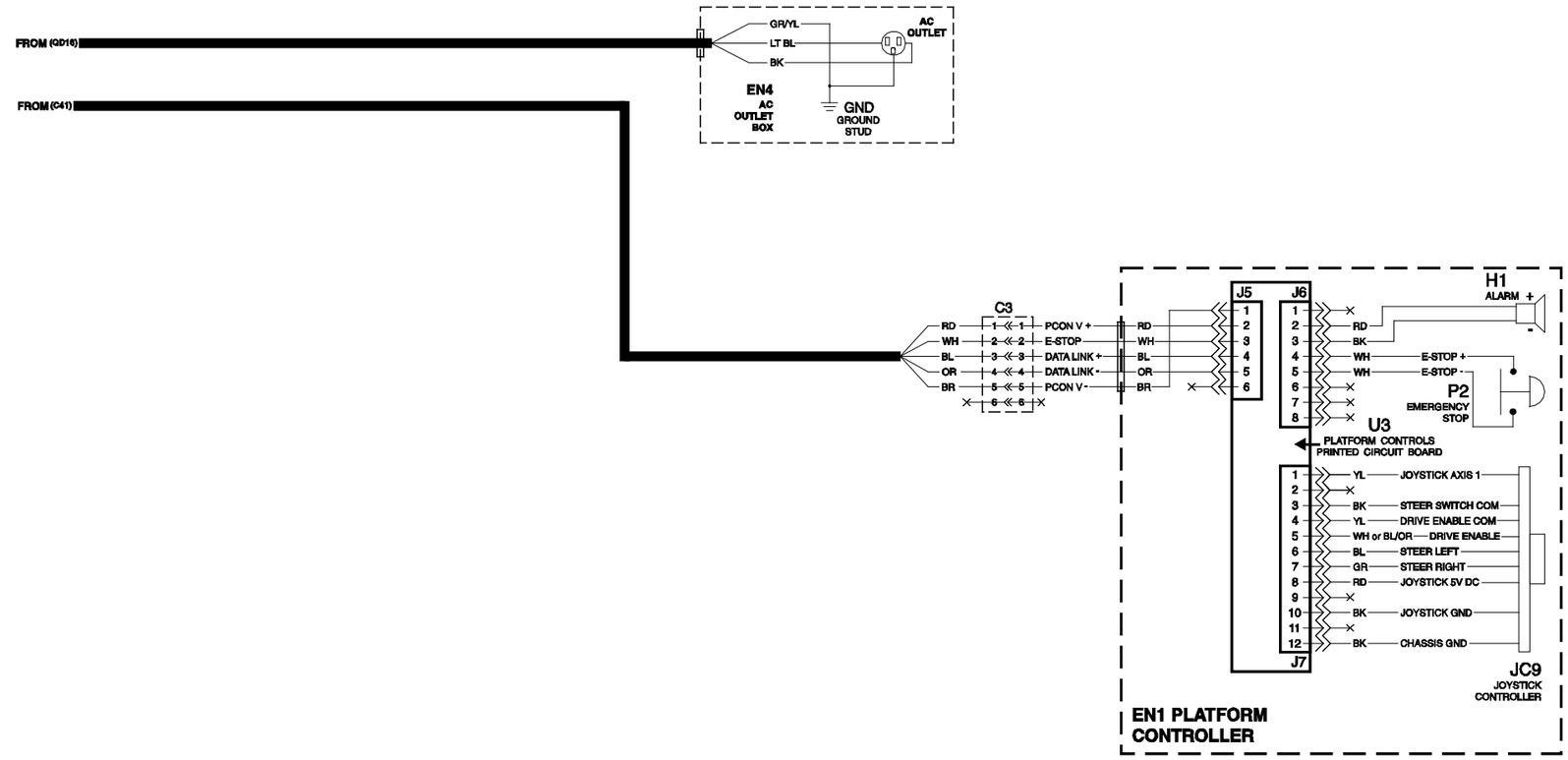

https://truckmanualshub.com/

Electrical Schematic, GS-1530, 1532, 1930, 1932, AS / CE

(from serial numbers GS3014A-136973, GS3015C-18039, GS3015D-1114 to GS3016D-5426, GS3016P-142281 to GS3016P-158208)

https://truckmanualshub.com/

Electrical Schematic, GS-1530, 1532, 1930 1932, AS / CE

(from serial number GS3016D-5427, GS3016P-158209)

https://truckmanualshub.com/

Electrical Schematic, GS-1530, 1532, 1930, 1932, AS / CE

(from serial numbers GS3016D-5427, GS3016P-158209)

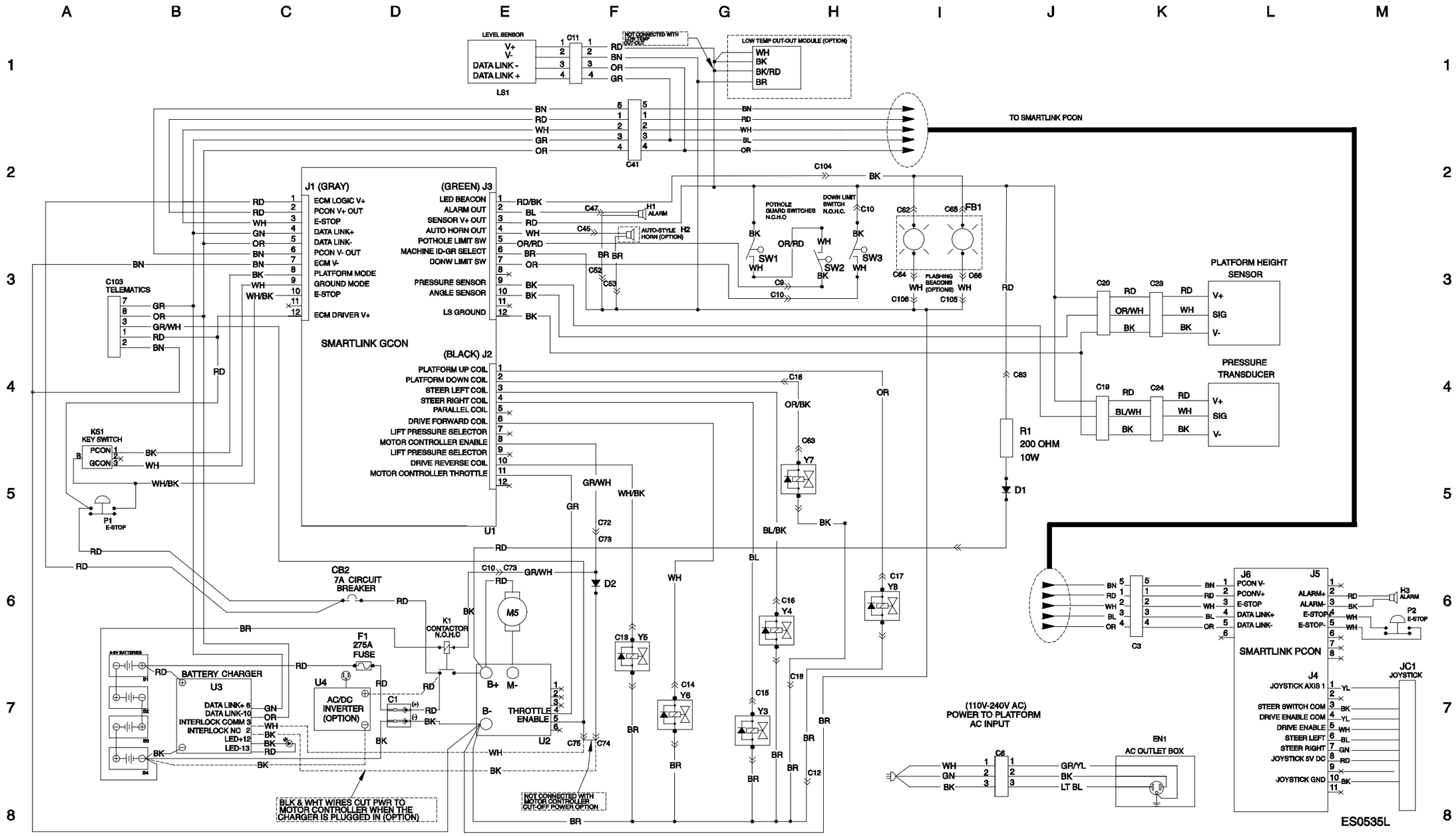

https://truckmanualshub.com/

Electrical Schematic, GS-3232, AS / CE

(from serial number GS3211A-110000 to GS3214A-135714, GS3212C-10000 to GS3215C-14503)

https://truckmanualshub.com/

Electrical Schematic, GS-3232, AS / CE

(from serial number GS3211A-110000 to GS3214A-135714, GS3212C-10000 to GS3215C-14503)

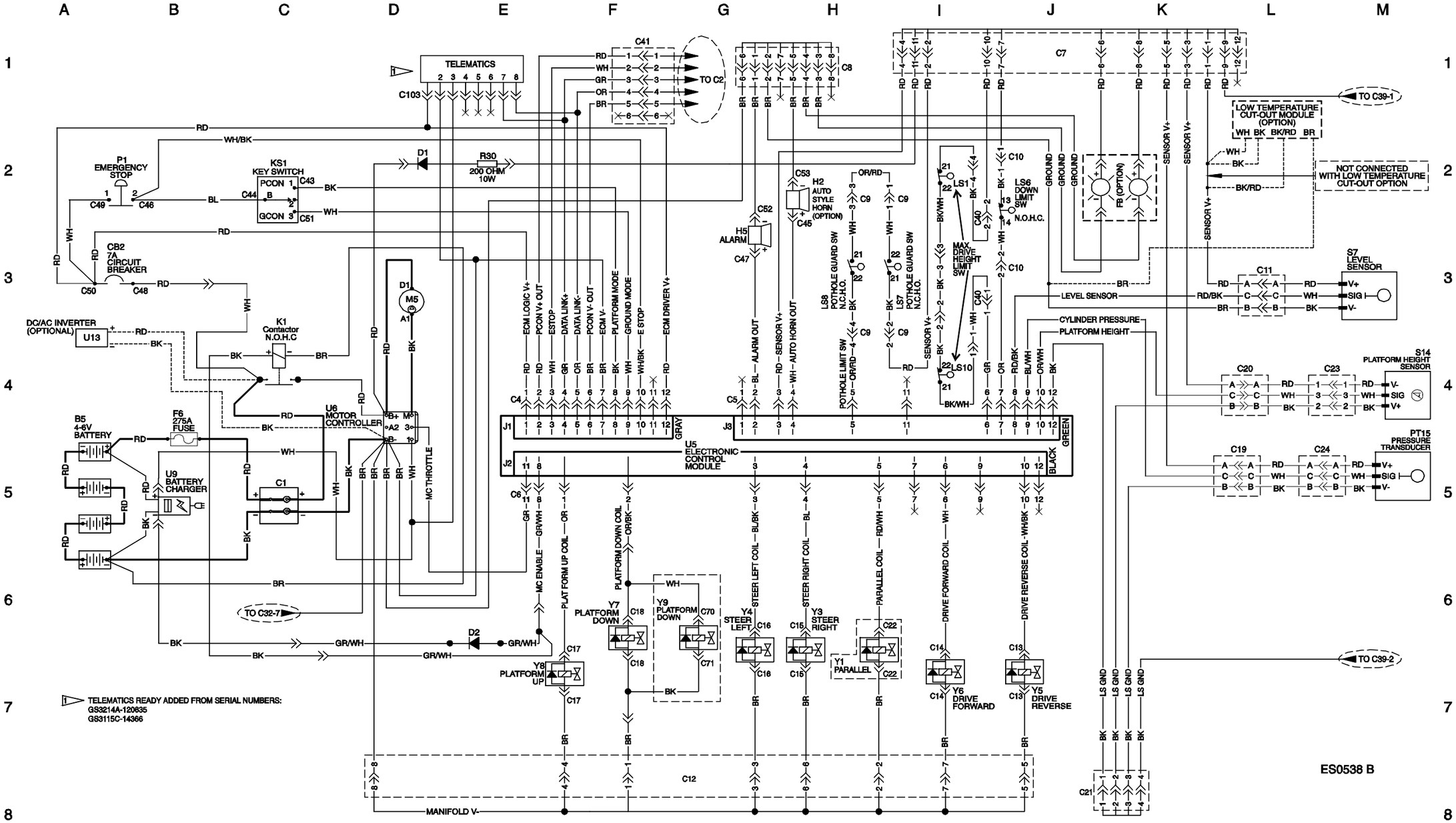

https://truckmanualshub.com/

Electrical Schematic, GS-3232, AS / CE

(from serial number GS3211A-110000 to GS3214A-135714, GS3212C-10000 to GS3215C-14503)

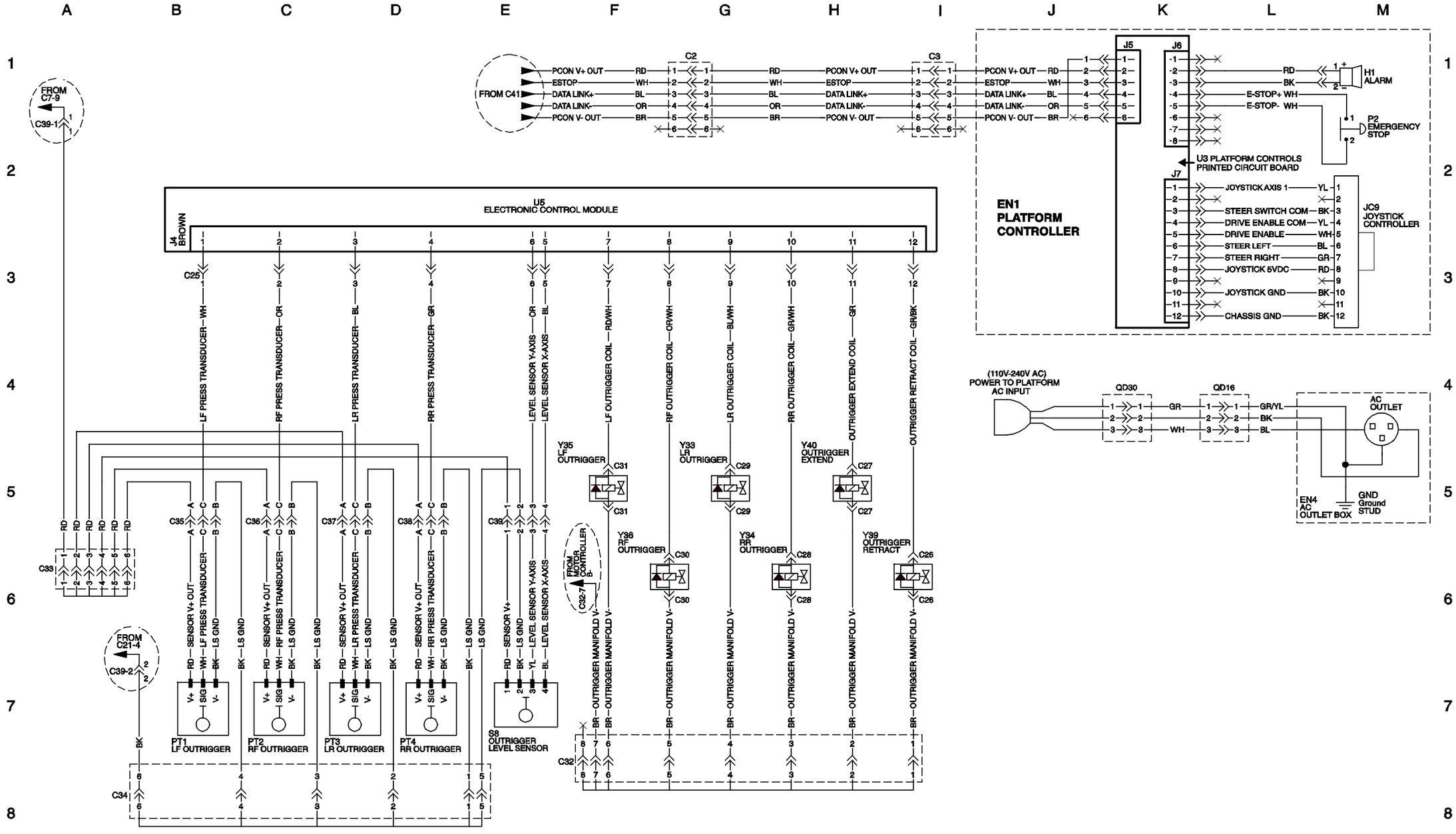

https://truckmanualshub.com/

Electrical Schematic, GS-3232, AS / CE

(from serial number GS3211A-110000 to GS3214A-135714, GS3212C-10000 to GS3215C-14503)

https://truckmanualshub.com/

Electrical Schematic, GS-3232, AS / CE

(from serial number GS3214A-135715 to GS3215A-141898, GS3215C-14504)

https://truckmanualshub.com/

Electrical Schematic, GS-3232, AS / CE

(from serial number GS3214A-135715 to GS3215A-141898, GS3215C-14504)

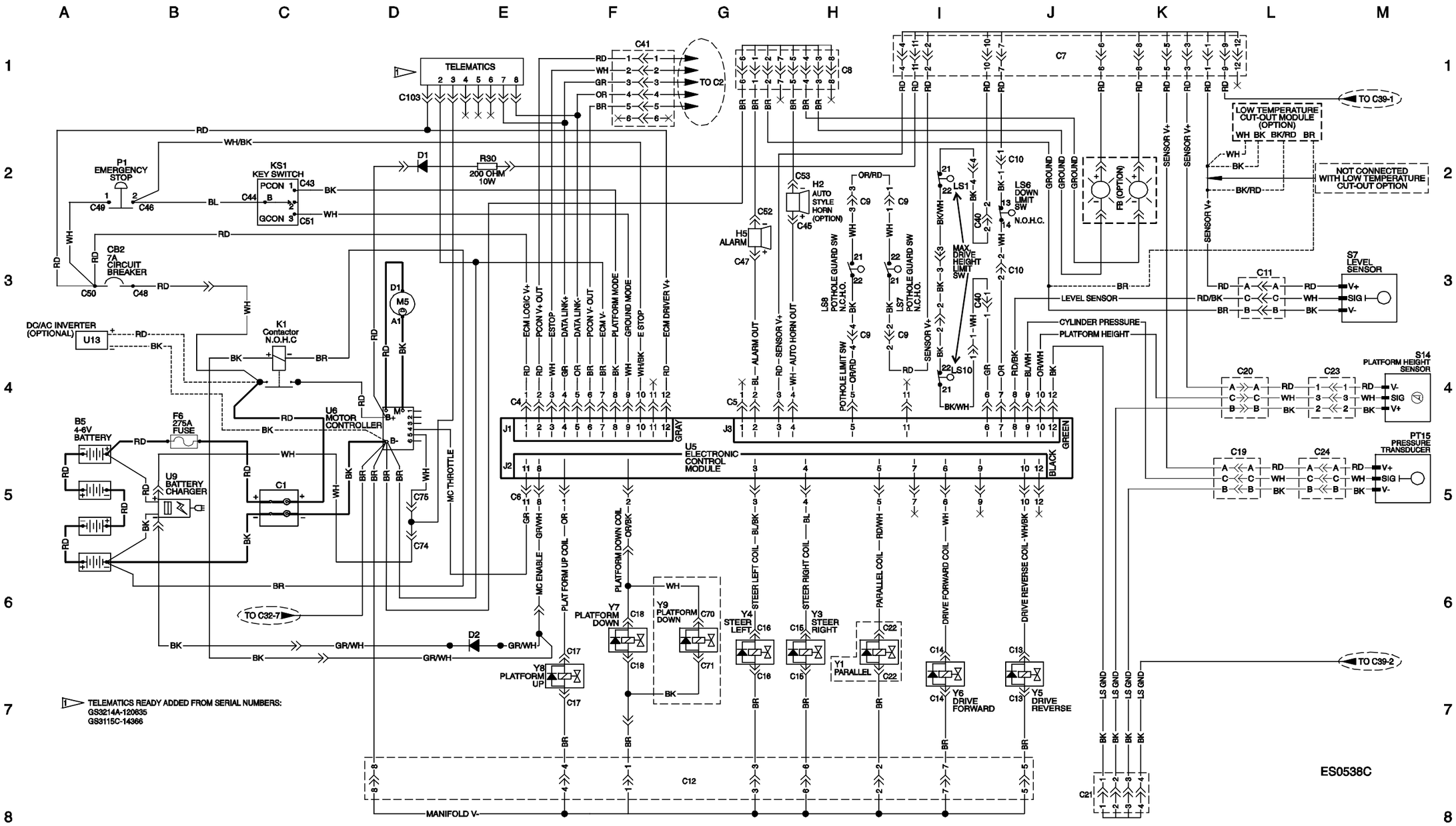

https://truckmanualshub.com/

Electrical Schematic, GS-3232, AS / CE

(from serial number GS3214A-135715 to GS3215A-141898, GS3215C-14504)

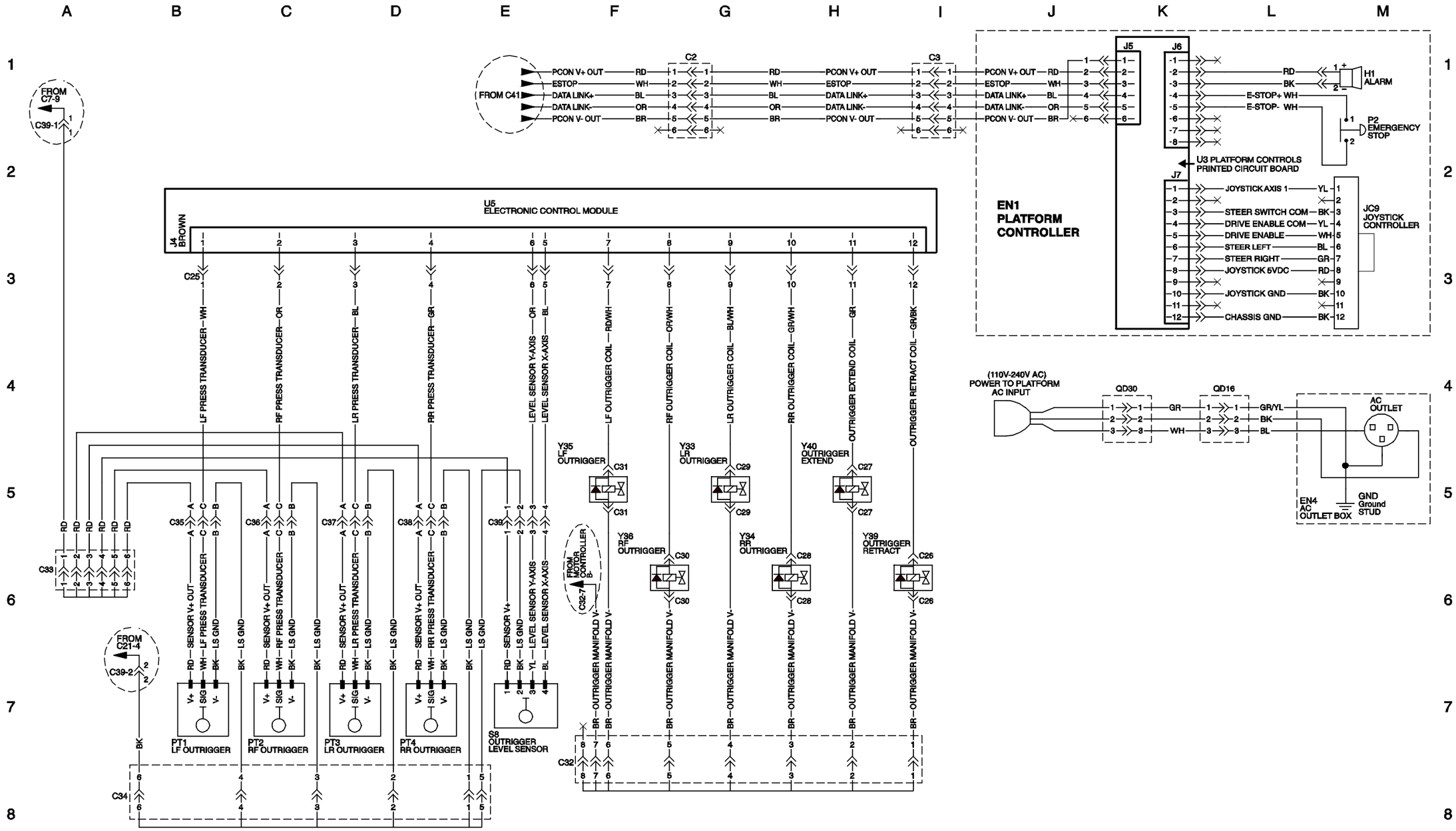

https://truckmanualshub.com/

Electrical Schematic, GS-3232, AS / CE

(from serial number GS3214A-135715 to GS3215A-141898, GS32115C-14504)

https://truckmanualshub.com/

Electrical Schematic, GS-3232, AS / CE

(from serial numbers GS3215A-141899, GS3216P-142676 to GS3216P-146462)

https://truckmanualshub.com/

Electrical Schematic, GS-3232, AS / CE

(from serial numbers GS3215A-141899, GS3216P-142676 to GS3216P-146462)

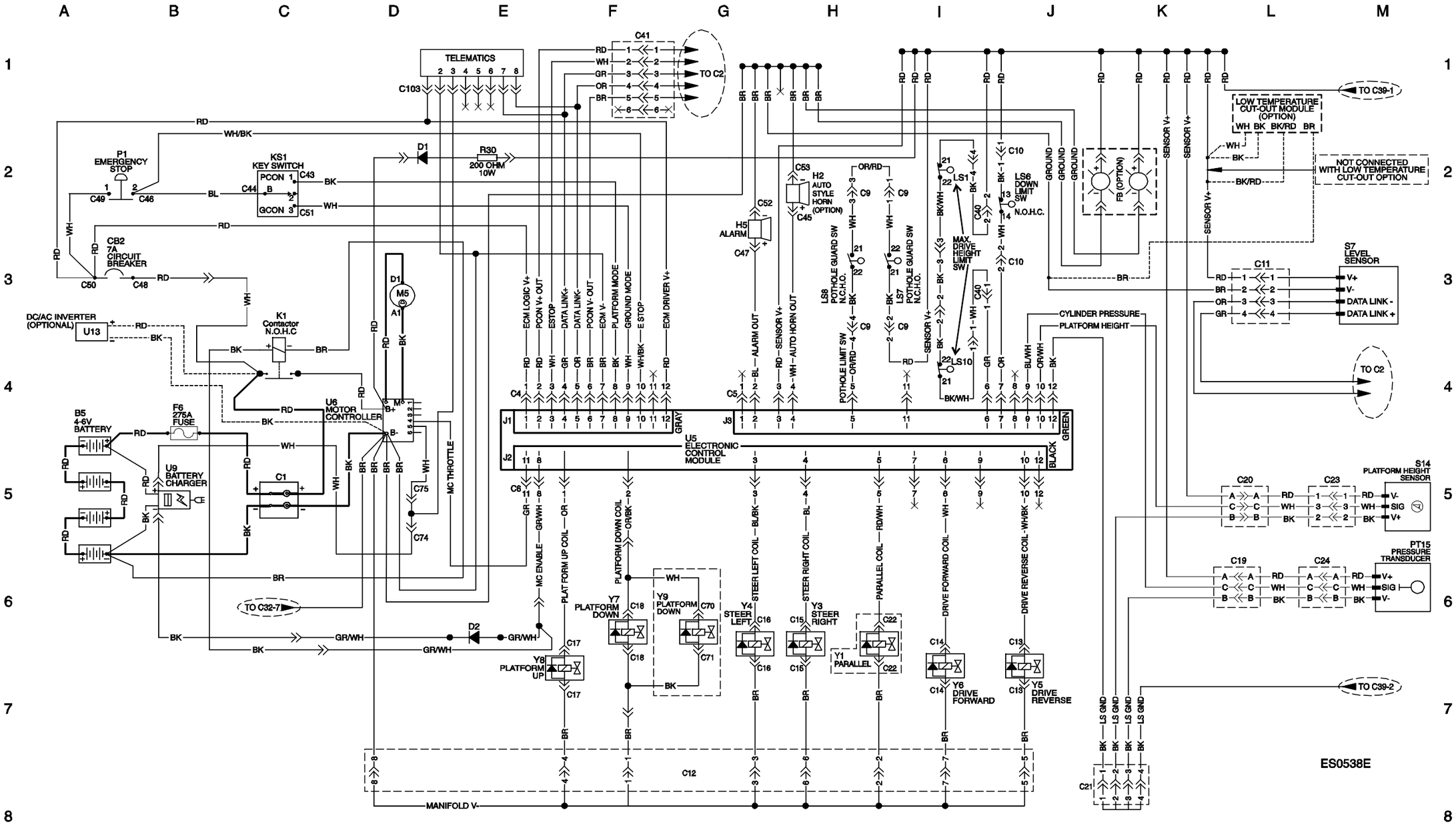

https://truckmanualshub.com/

Electrical Schematic, GS-3232, AS / CE

(from serial numbers GS3215A-141899, GS3216P-142676 to GS3216P-146462)

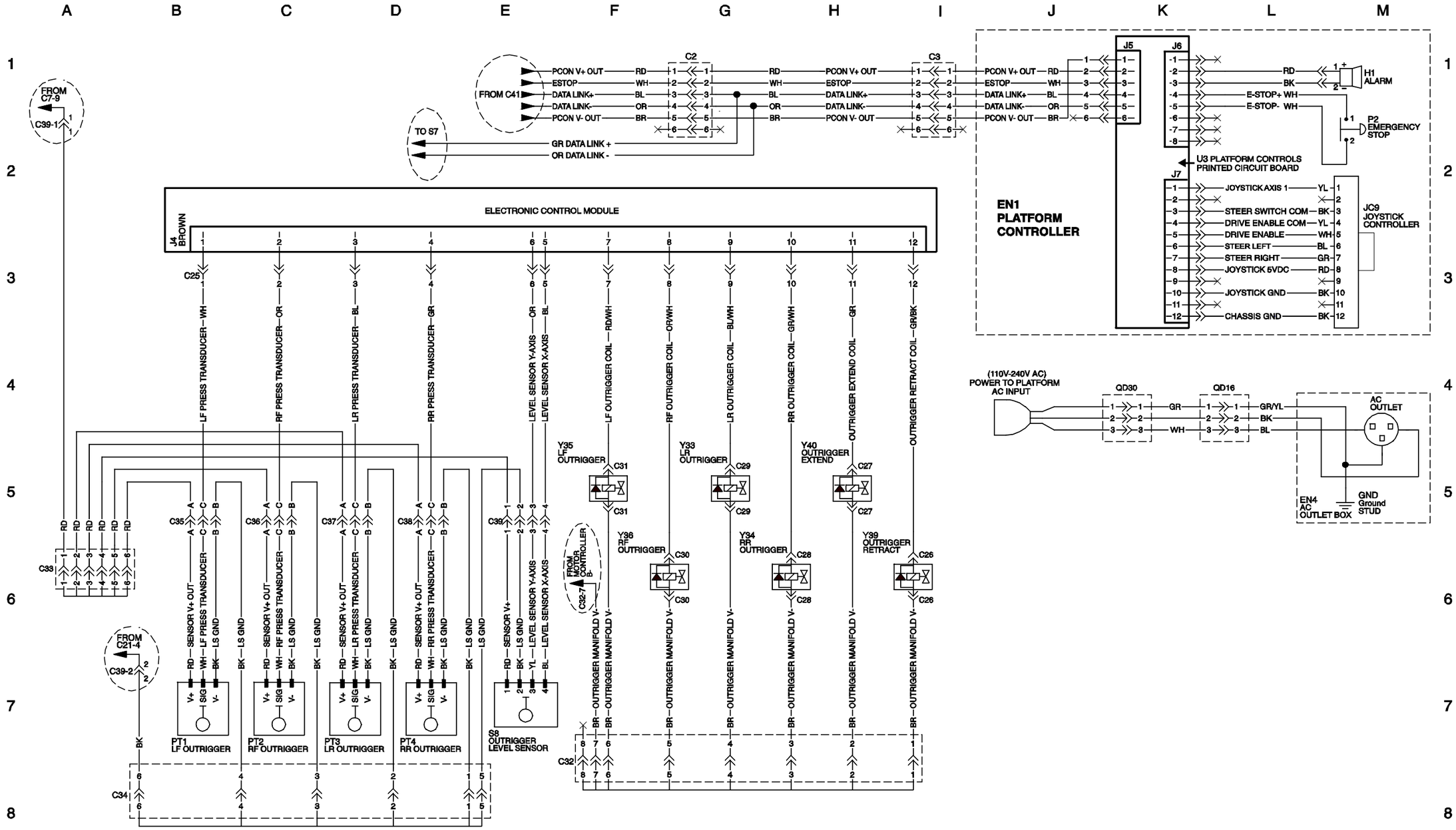

https://truckmanualshub.com/

Electrical Schematic, GS-3232, AS / CE

(from serial numbers GS3215A-141899, GS3216P-142676 to GS3216P-146462)

https://truckmanualshub.com/

Electrical Schematic, GS-3232, AS / CE

(from serial number GS3216P-146463)

https://truckmanualshub.com/

Electrical Schematic, GS-3232, AS / CE

(from serial number GS3216P-146463)

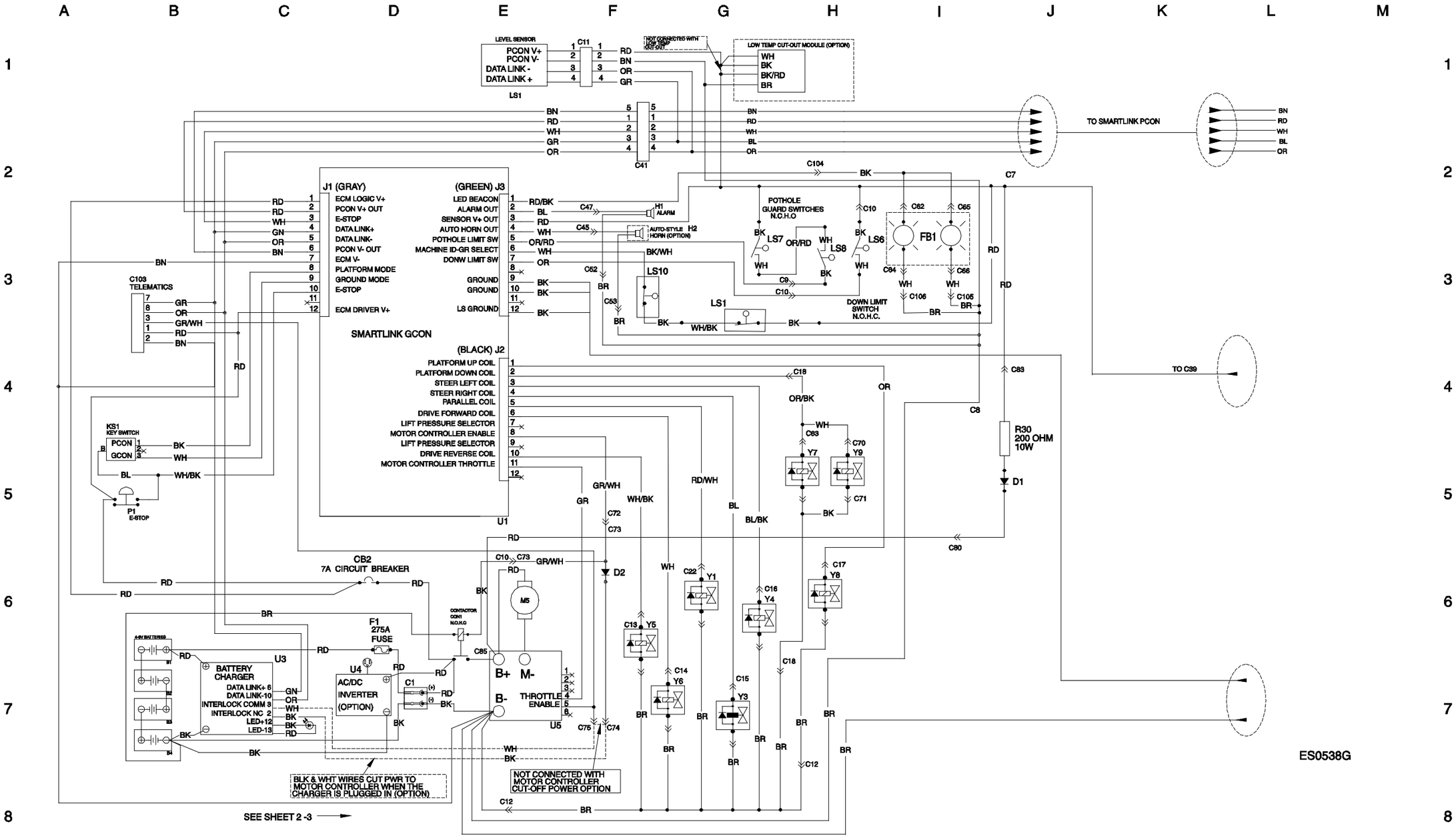

https://truckmanualshub.com/

Electrical Schematic, GS-3232, ANSI / CSA

(from serial number GS3216P-146463)

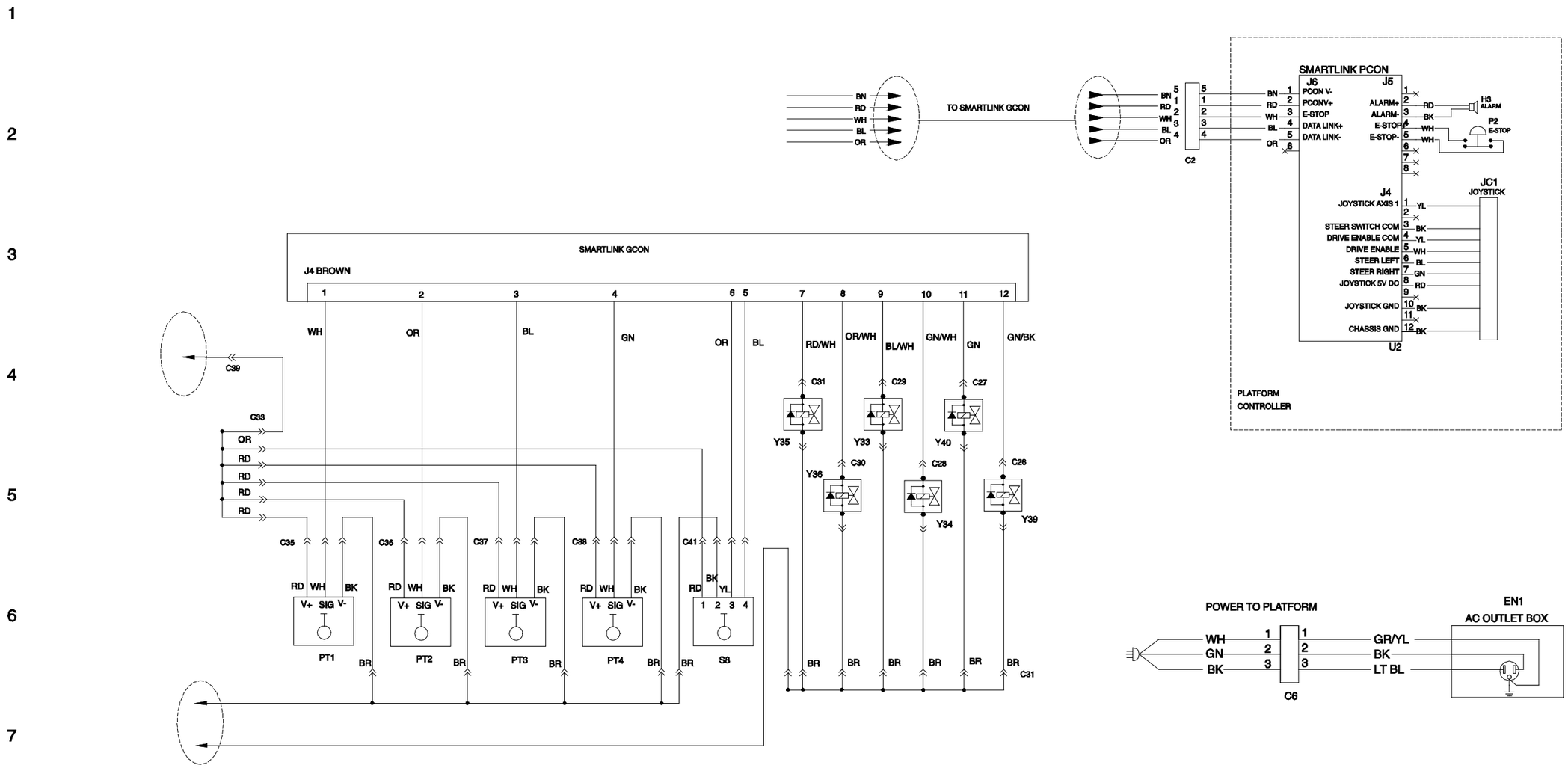

https://truckmanualshub.com/

Electrical Schematic, GS-3232, AS / CE

(from serial number GS3216P-143463)

https://truckmanualshub.com/

Electrical Schematic, GS-2032, 2632, 2046, 2646, AS / CE

(from serial number GS3211A-110000 to GS3214A-135715, GS3212C-10000 to GS3215C-14377, GS4612A-110000 to GS4614A-135366, GS4612C-10000 to GS4615C-14503, GS4613D-101 to GS4615D-1303)

https://truckmanualshub.com/

Electrical Schematic, GS-2032, 2632, 2046, 2646, AS / CE

(from serial number GS3211A-110000 to GS3214A-1135714, GS3212C-10000 to GS3215C-14377, GS4612A-110000 to GS4614A-135366, GS4612C-10000 to GS4615C-14503, GS4613D-101 to GS4615D-1303)

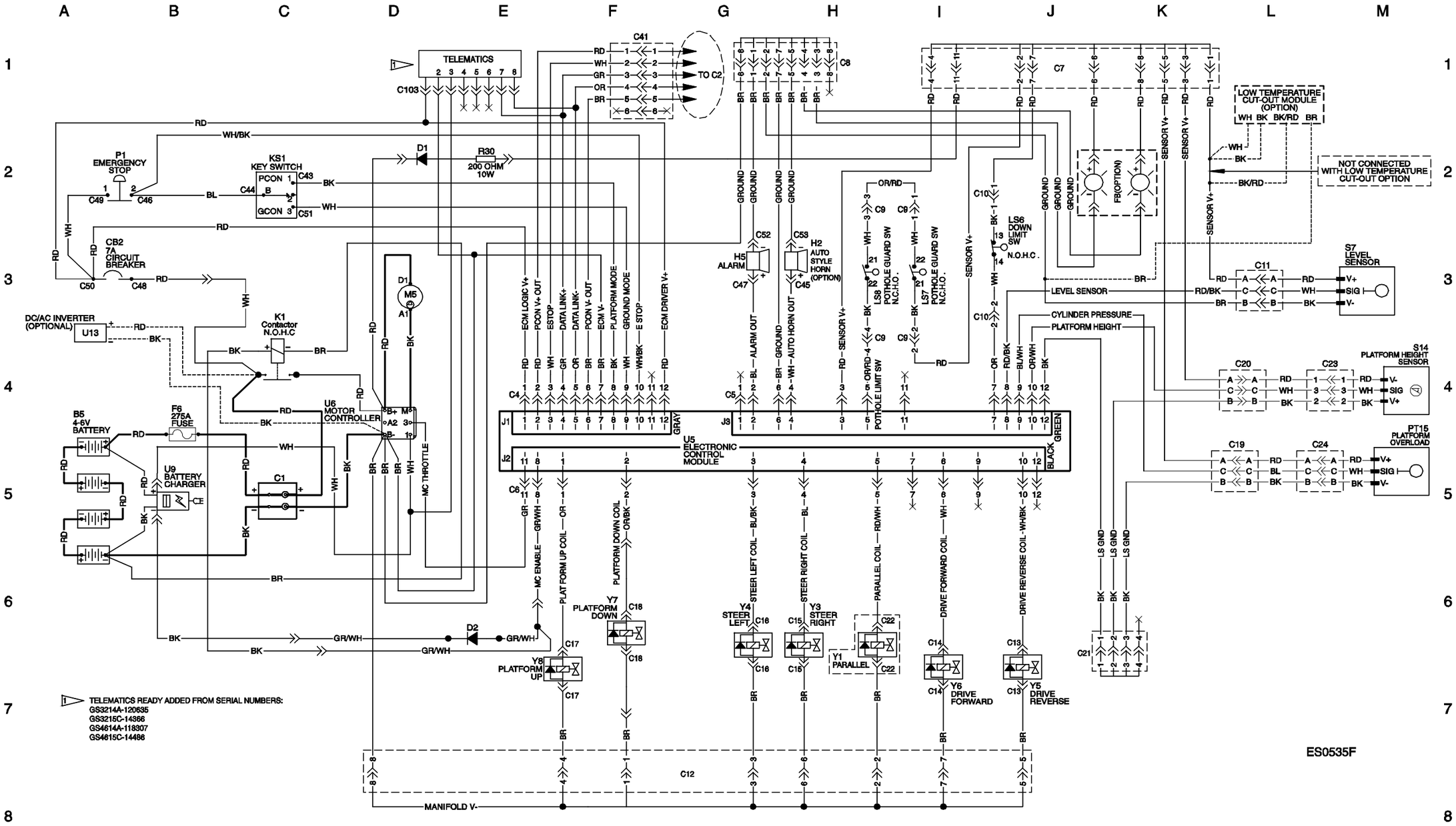

https://truckmanualshub.com/

Electrical Schematic, GS-2032, 2632, 2046, 2646, AS / CE

(from serial number GS3211A-110000 to GS3214A-135714, GS3212C-10000 to GS3215C-14377, GS4612A-110000 to GS4614A-135366, GS4612C-10000 to GS4615C-14503, GS4613D-101 to GS4615D-1303)

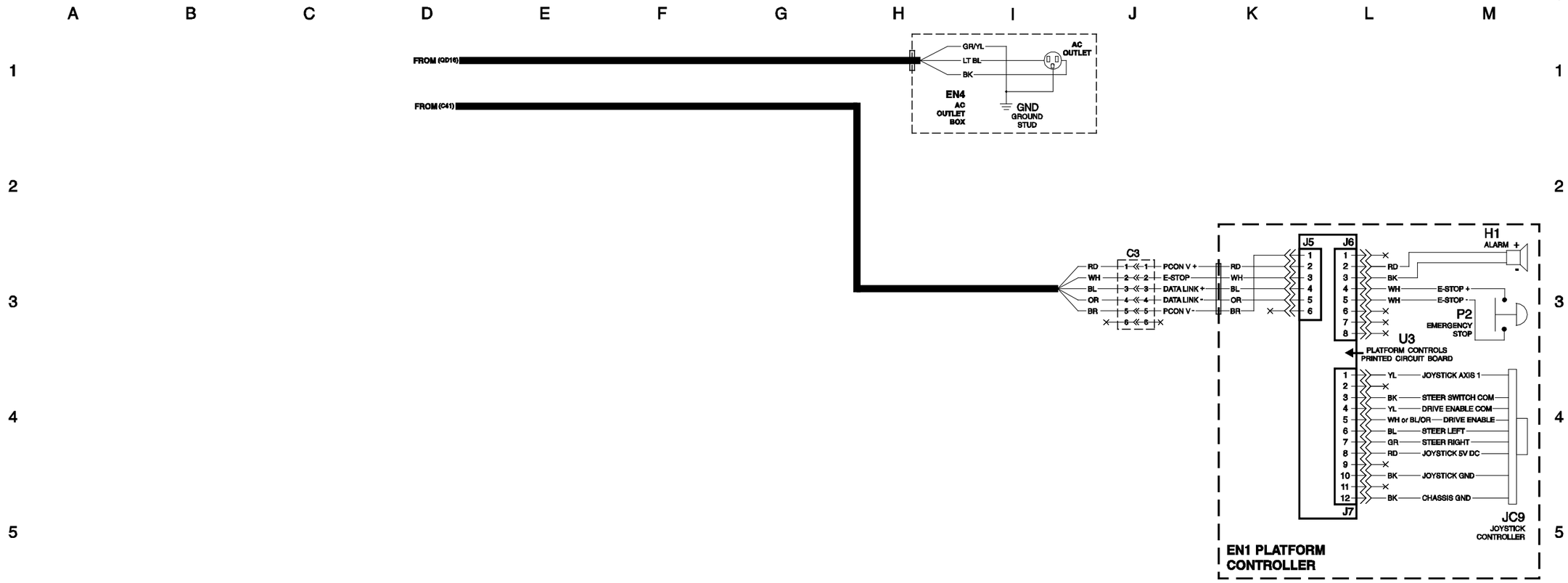

https://truckmanualshub.com/

Electrical Schematic, GS-2032, 2632, 2046, 2646, AS / CE

(from serial number GS3211A-110000 to GS3214A-1135714, GS3215C-10000 to GS3215C-14377, GS4612A-110000 to GS4614A-135366, GS4612C-10000 to GS4615C-14503, GS4613D-101 to GS4615D-1303)

https://truckmanualshub.com/

Electrical Schematic, GS-2032, 2632, 2046, 2646, AS / CE

(from serial numbers GS3214A-135715 to GS3215A-141898, GS3215C-14378, GS4614A-135367 to GS4615A-137959, GS46C-14504, GS4615D-1304)

https://truckmanualshub.com/

Electrical Schematic, GS-2032, 2632, 2046, 2646, AS / CE

(from serial numbers GS3214A-135715 to GS3215A-141898, GS3215C-14378, GS4614A-135367 to GS4615A-137959, GS4615C-14504, GS4615D-1304)

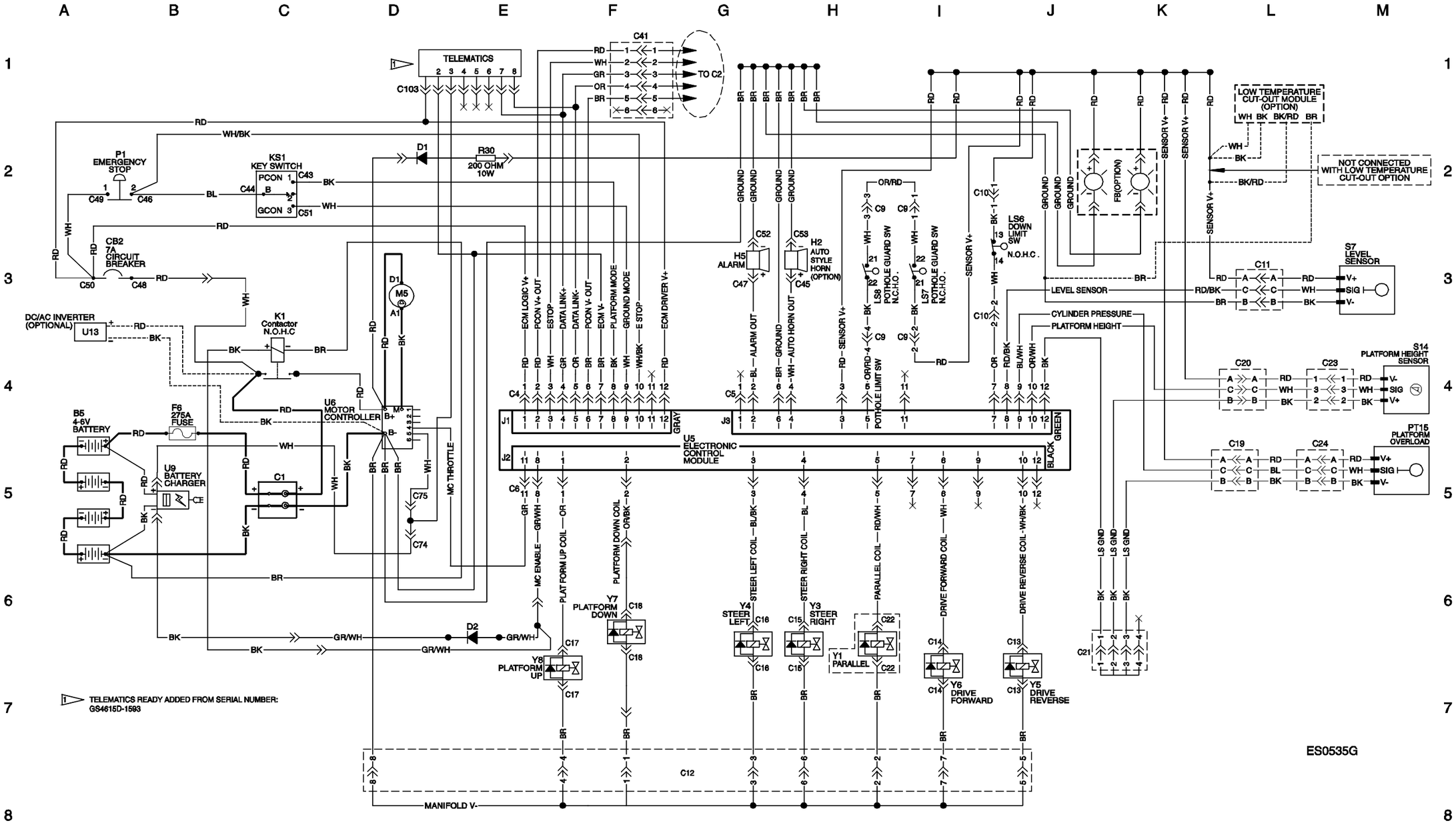

https://truckmanualshub.com/

Electrical Schematic, GS-2032, 2632, 2046, 2646, AS / CE

(from serial numbers GS3214A-1135715 to GS3215A-1141898, GS3215C-14378, GS4614A-135367 to GS4615A-137959, GS4615C-14504, GS4615D-1304)

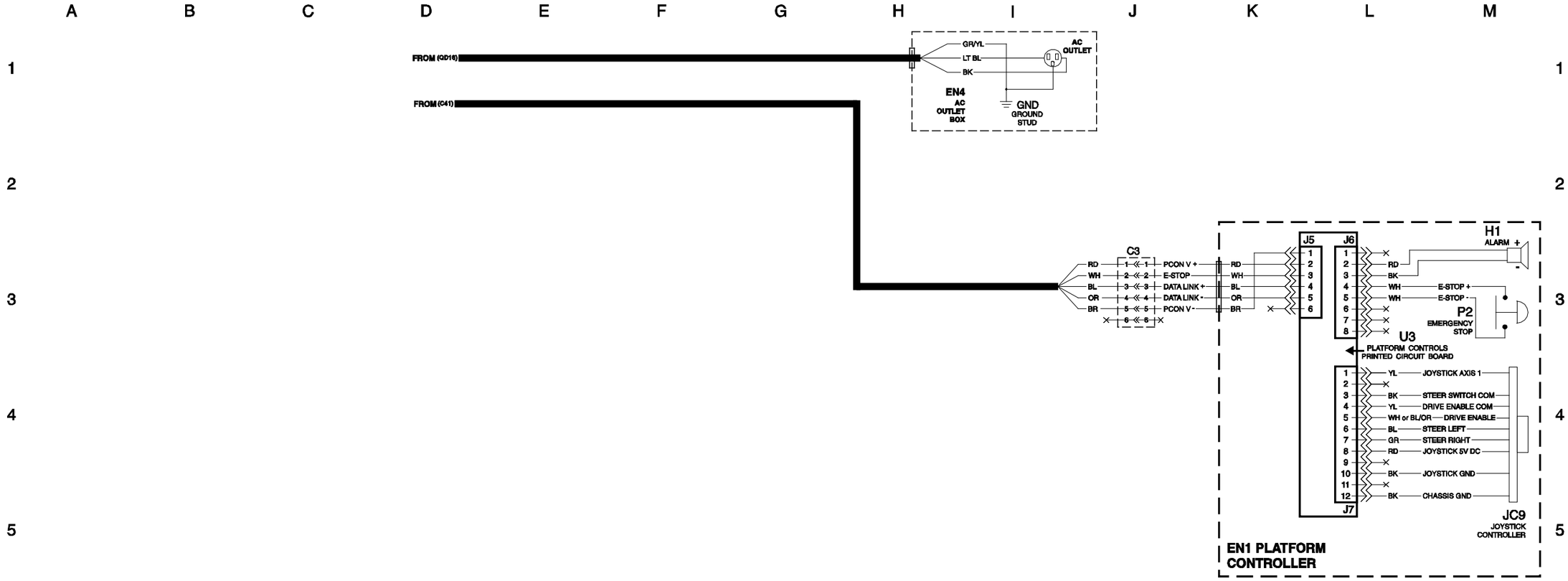

https://truckmanualshub.com/

Electrical Schematic, GS-2032, 2632, 2046, 2646, AS / CE

(from serial numbers GS3214A-135715 to GS3215A-141898, GS3215C-14378, GS4614A-135367 to GS4615A-137959, GS4615C-14504, GS4615D-1304)

https://truckmanualshub.com/

Electrical Schematic, GS-2032, 2632, 2046, 2646, AS / CE

(from serial numbers GS3215A-141899, GS3216P-142676 to GS3216P-146462, GS4615A-137960, GS4616P-138362 to GS4616P-139710)

https://truckmanualshub.com/

Electrical Schematic, GS-2032, 2632, 2046, 2646, AS / CE

(from serial numbers GS3215A-141899, GS3216P-142676 to GS3216P-146462, GS4615A-137960, GS4616P-138362 to GS4616P-139710)

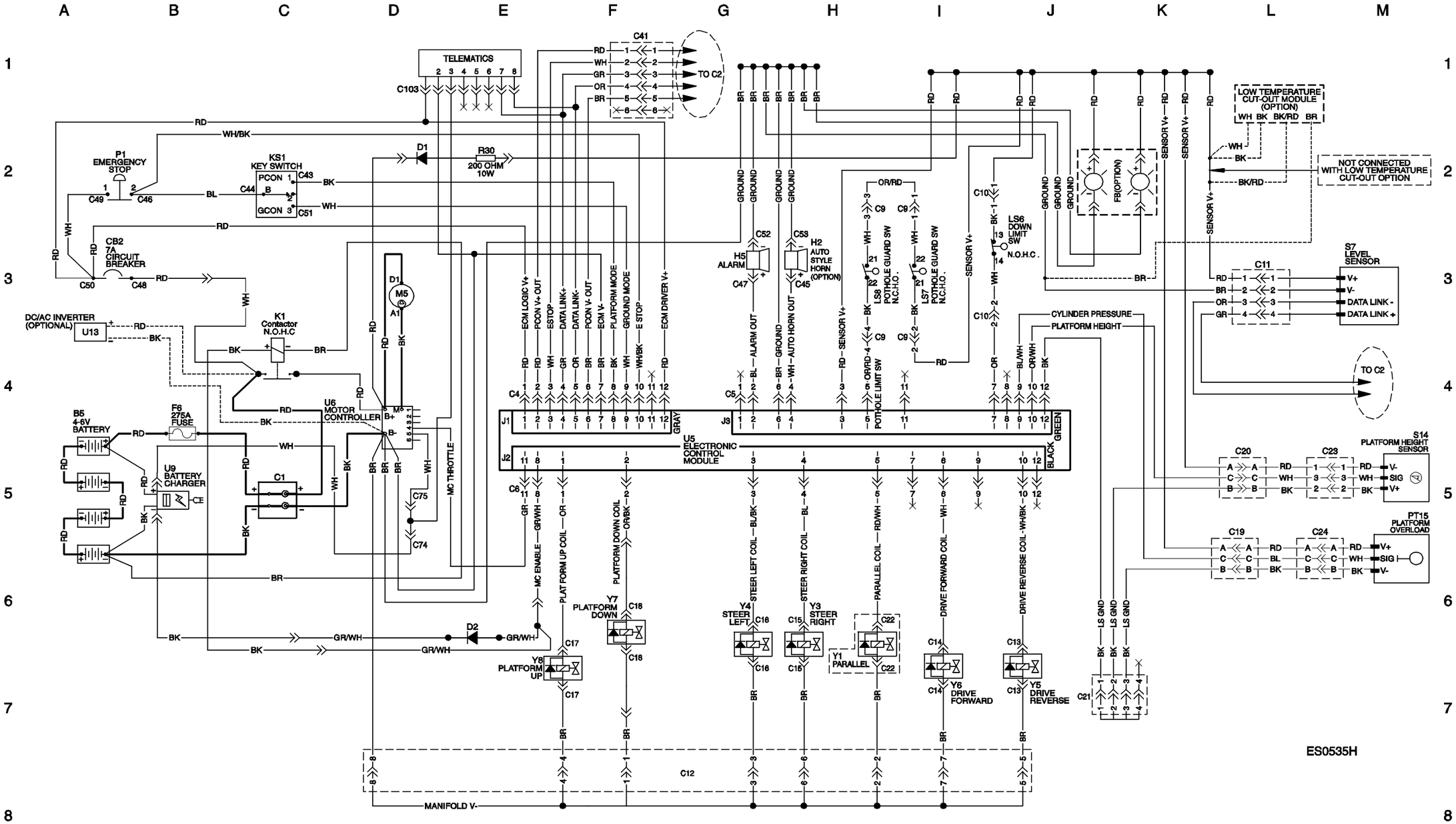

https://truckmanualshub.com/

Electrical Schematic, GS-2032, 2632, 2046, 2646, AS / CE

(from serial numbers GS3215A-141899, GS3216P-142676 to GS3216P-146462, GS4615A-137960, GS4616P-138362 to GS4616P-139710)

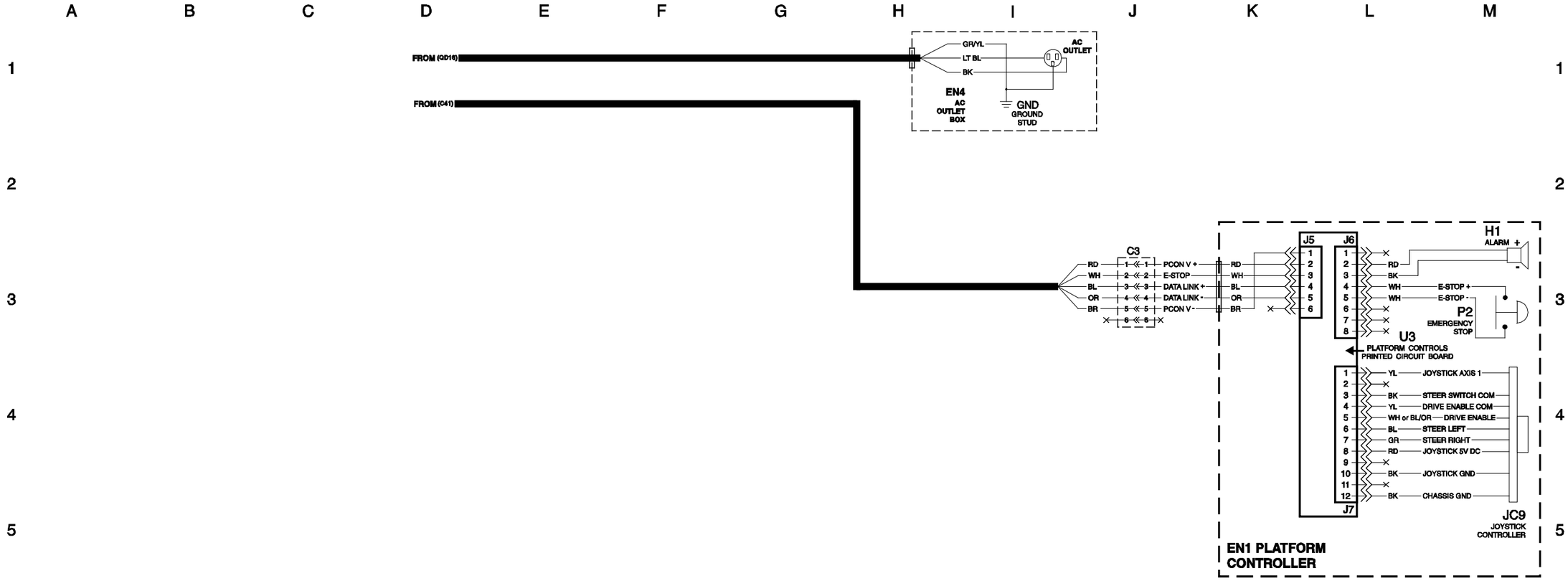

https://truckmanualshub.com/

Electrical Schematic, GS-2032, 2632, 2046, 2646, AS / CE

(from serial numbers GS3215A-141899, GS3216P-142676 to GS3216P-146462, GS4615A-137960, GS4616P-138362 to GS4616P-139710)

https://truckmanualshub.com/

Electrical Schematic, GS-2032, 2632, 2046, 2646, AS / CE

(from serial numbers GS3216P-146463, GS4616P-139711)

https://truckmanualshub.com/

Electrical Schematic, GS-2032, 2632, 2046, 2646, AS / CE

(from serial numbers GS3216P-146463, GS4616P-139711)

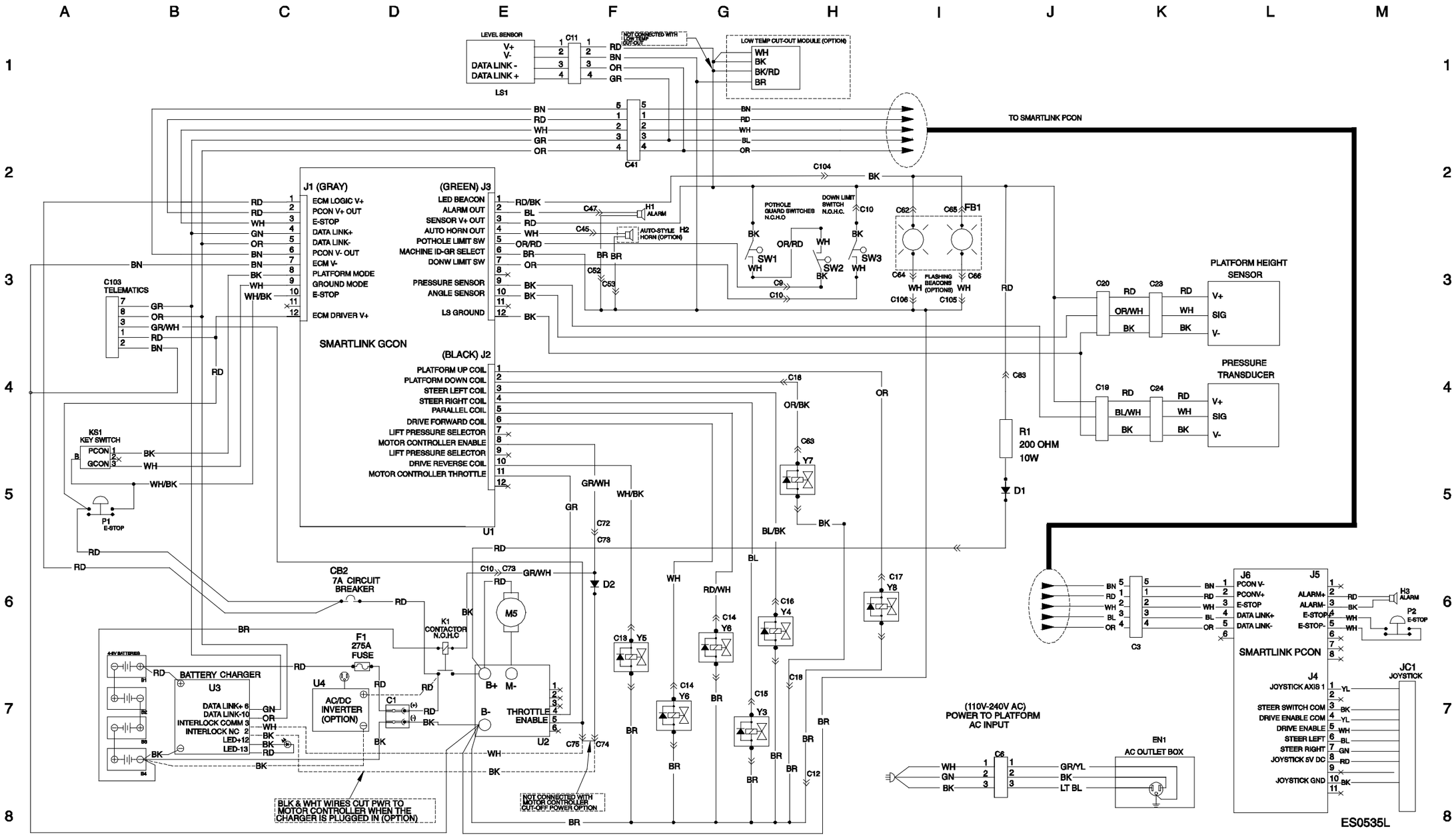

https://truckmanualshub.com/

Electrical Schematic, GS-3246, AS / CE

(from serial numbers GS4612A-110000 to GS4614A-135366, GS4612C-10000 to GS4615C-14503, GS4614D-101 to GS4615D-1303)

https://truckmanualshub.com/

Electrical Schematic, GS-3246, AS / CE

(from serial numbers GS4612A-110000 to GS4614A-135366, GS4612C-10000 to GS4615C-14503, GS4614D-101 to GS4615D-1303)

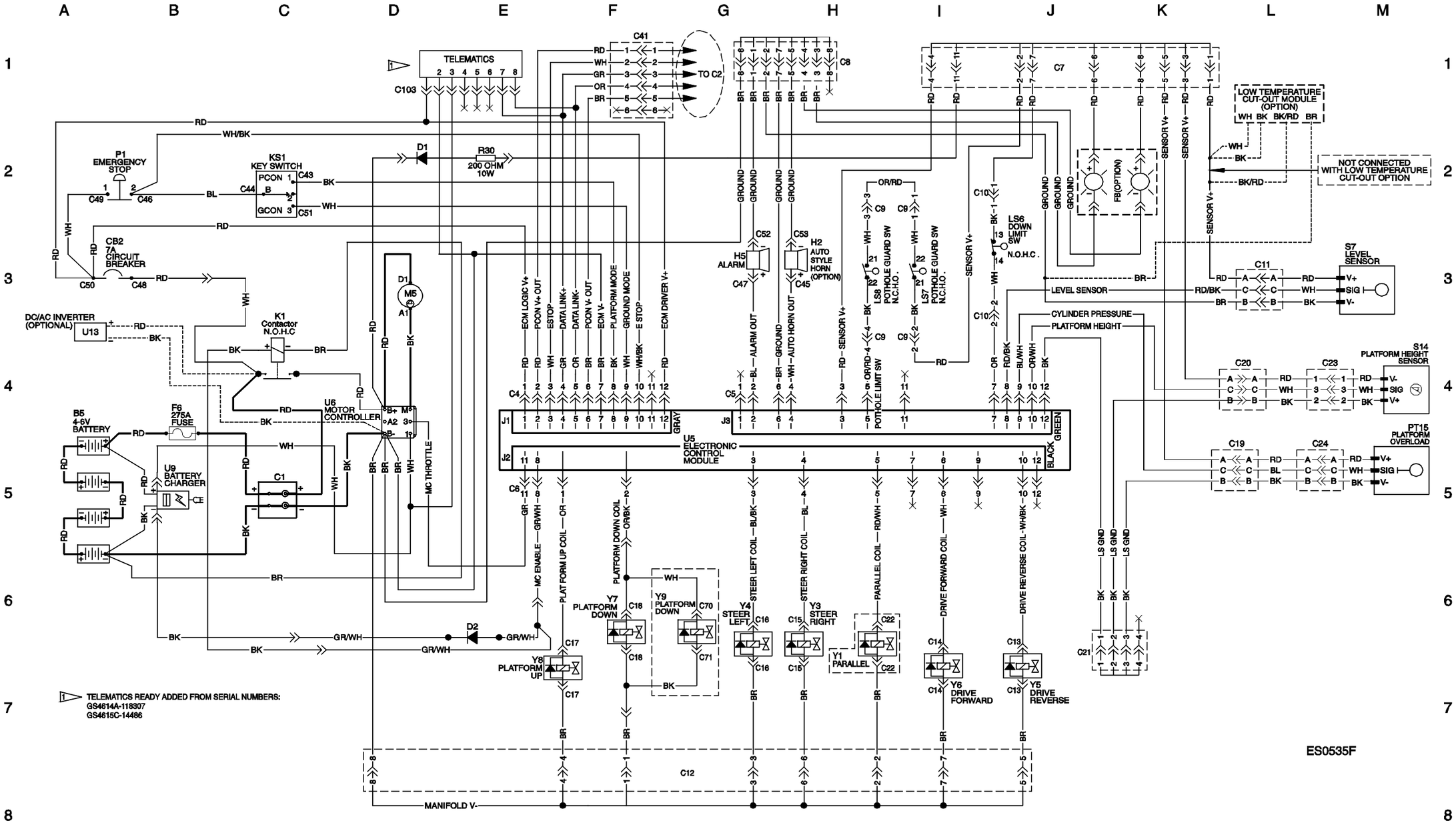

https://truckmanualshub.com/

Electrical Schematic, GS-3246, AS / CE

(from serial numbers GS4621A-110000 to GS4614A-135366, GS4612C-10000 to GS4615C-14503, GS4614D-101 to GS4615D-1303)

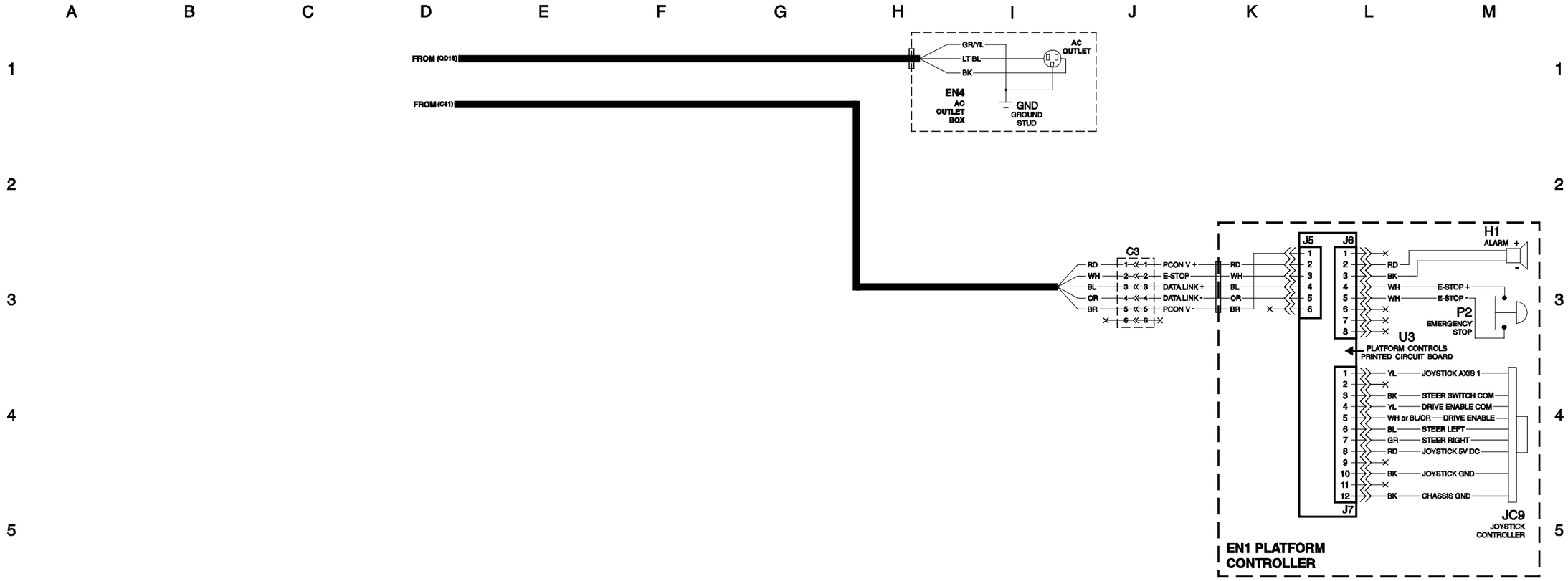

https://truckmanualshub.com/

Electrical Schematic, GS-3246, AS / CE

(from serial numbers GS4612A-110000 to GS4614A-135366, GS4612C-10000 to GS4615C-14503, GS4614D-101 to GS4615D-1303)

https://truckmanualshub.com/

Electrical Schematic, GS-3246, AS / CE

(from serial numbers GS4614A-135367 to GS4615A-137959, GS4615C-14504, GS4615D-1304)

https://truckmanualshub.com/

Electrical Schematic, GS-3246, AS / CE

(from serial numbers GS4614A-135367 to GS4615A-137959, GS4615C-14504, GS4615D-1304)

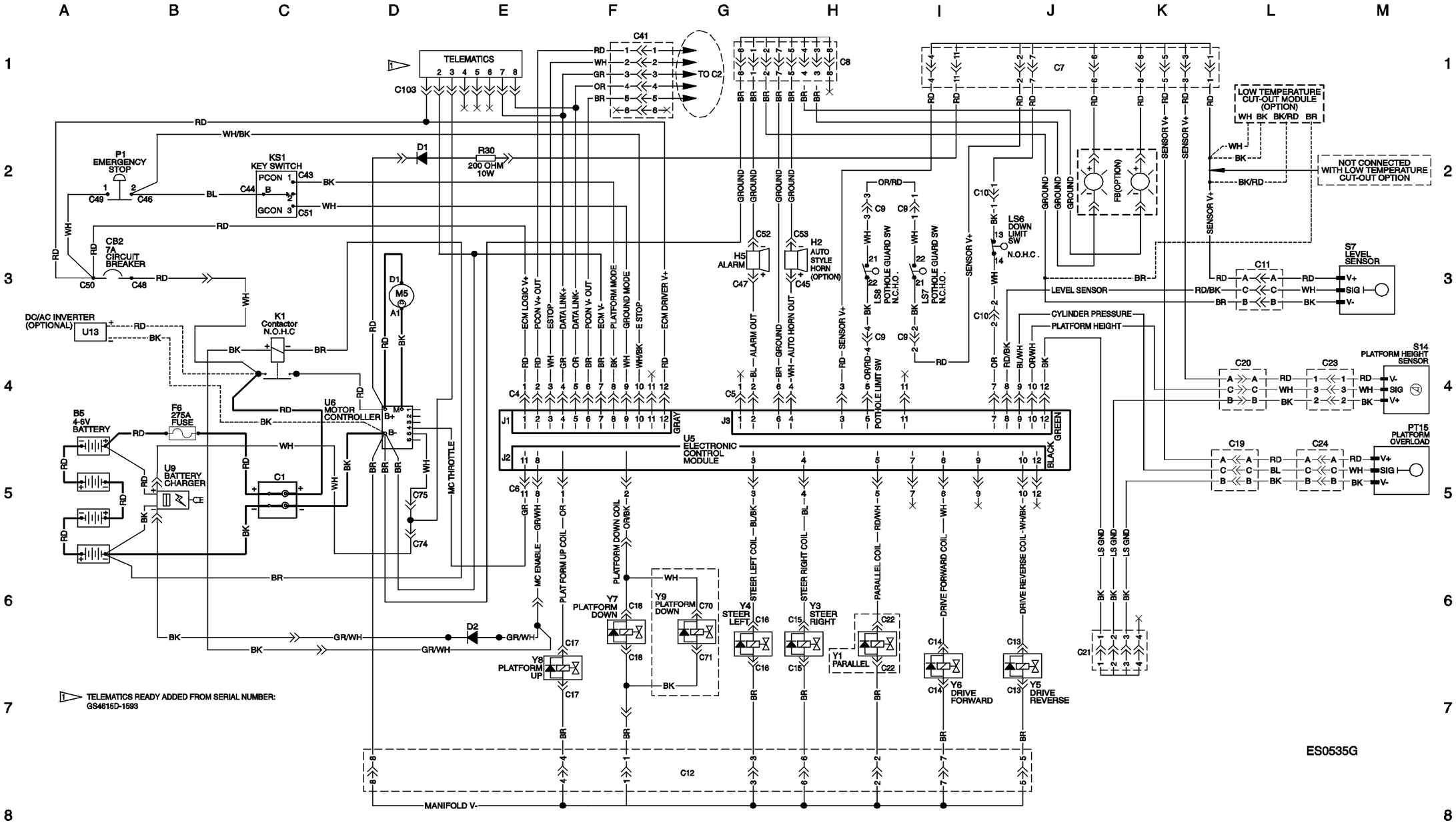

https://truckmanualshub.com/

Electrical Schematic, GS-3246, AS / CE

(from serial numbers GS4614A-135367 to GS4615A-137959, GS4615C-14504, GS4615D-1304)

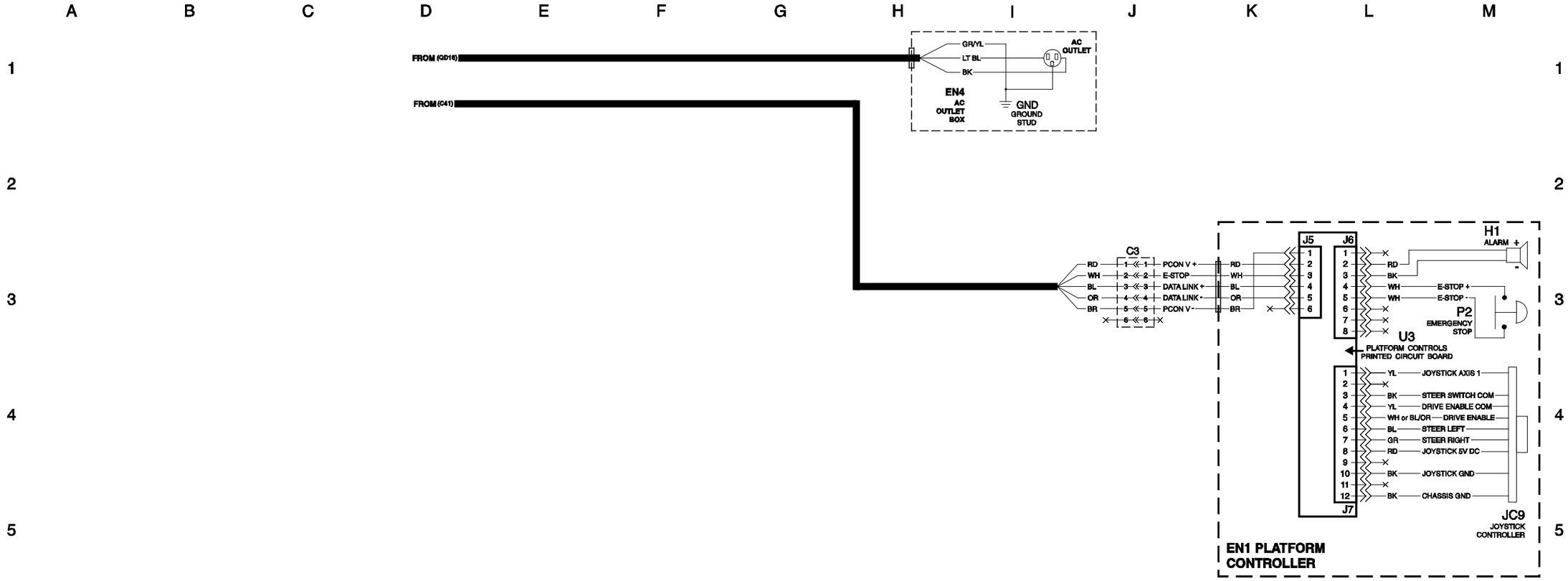

https://truckmanualshub.com/

Electrical Schematic, GS-3246, AS / CE

(from serial numbers GS4614A-135368 to GS4615A-137959, GS4615C-14504, GS4615D-1304 to GS4616D-4432)

https://truckmanualshub.com/

Electrical Schematic, GS-3246, AS / CE

(from serial number GS4615A-137960, GS4616P-138362 to GS4616P-139710)

https://truckmanualshub.com/

Electrical Schematic, GS-3246, AS / CE

(from serial number GS4615A-137960, GS4616P-138362 to GS4616P-139710)

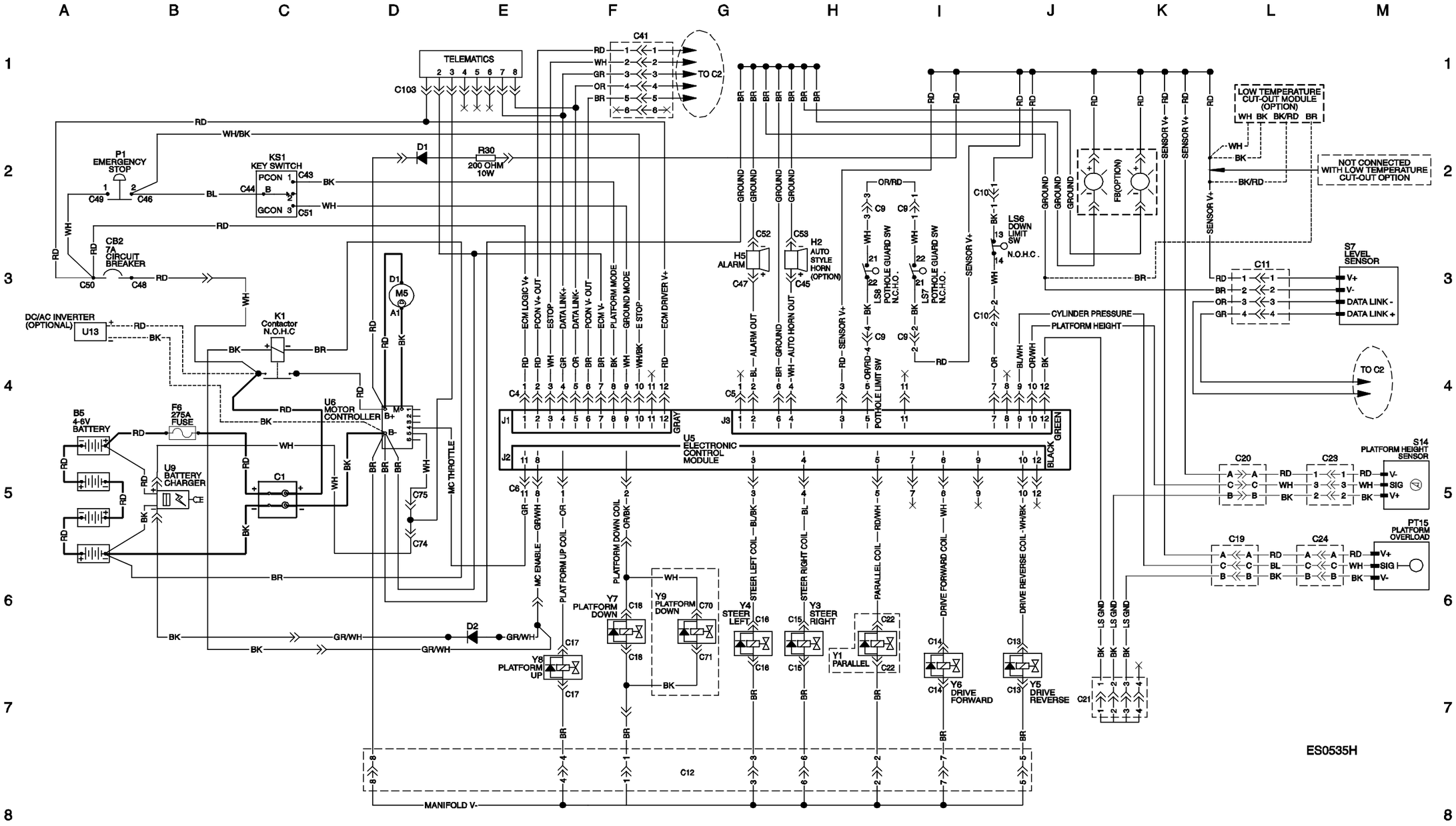

https://truckmanualshub.com/

Electrical Schematic, GS-3246, AS / CE

(from serial number GS4615A-137960, GS4616P-138362 to GS4616P-139710)

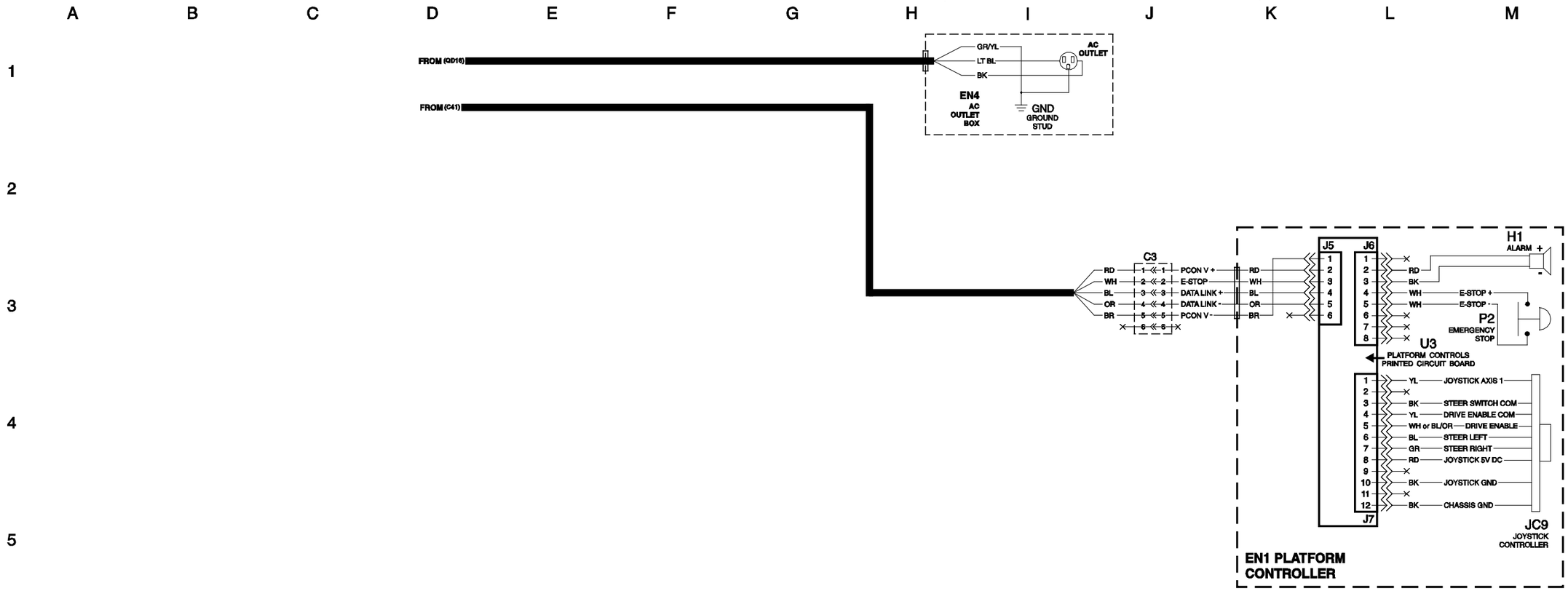

https://truckmanualshub.com/

Electrical Schematic, GS-3246, AS / CE

(from serial number GS4615A-137960, GS4616P-138362 to GS4616P-139710)

https://truckmanualshub.com/

Electrical Schematic, GS-3246, AS / CE

(from serial number GS4616D-4433, GS4616P-139711)

https://truckmanualshub.com/

Electrical Schematic, GS-3246, AS / CE

(from serial number GS4616D-4433, GS4616P-139711)

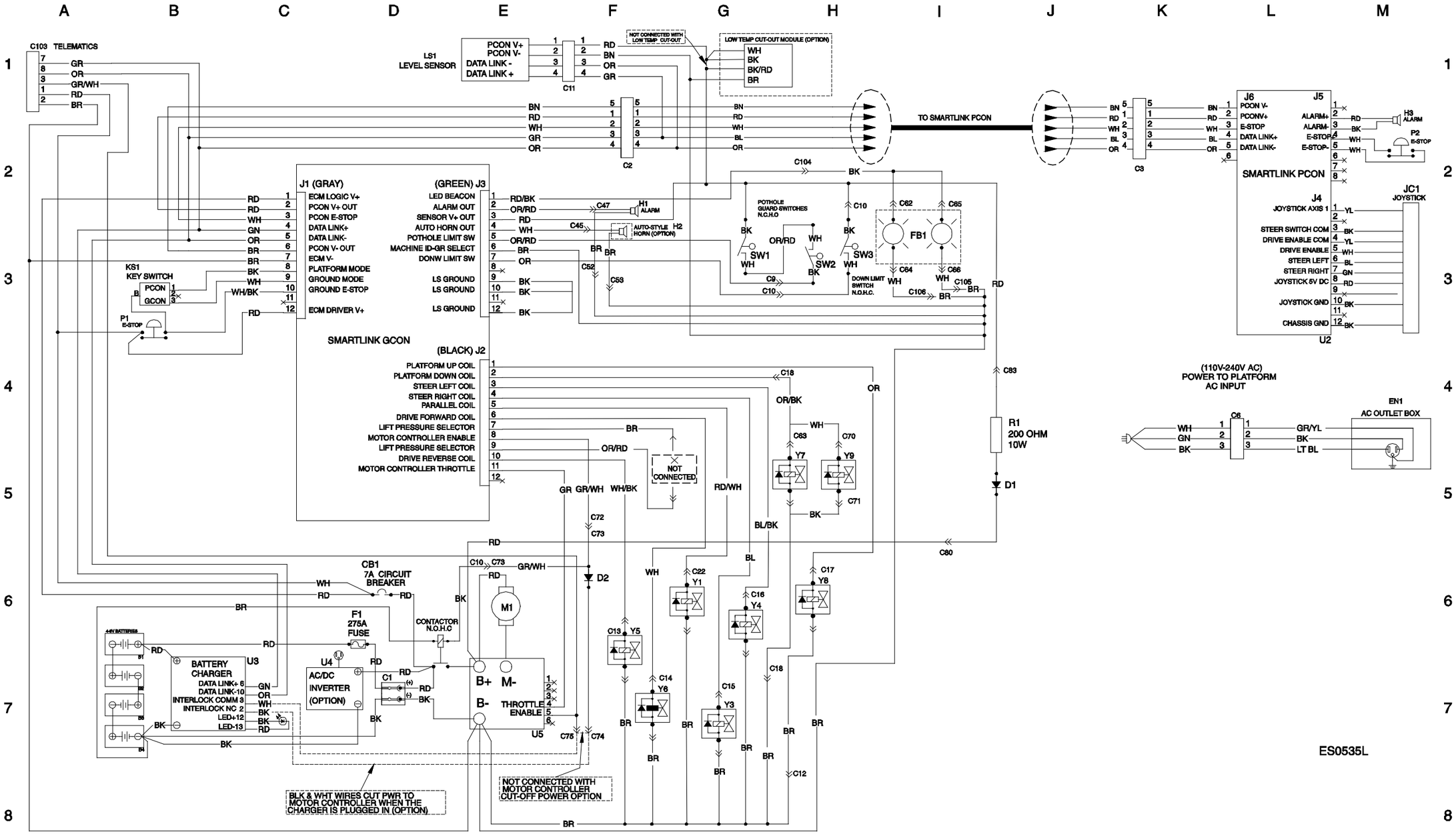

https://truckmanualshub.com/

Electrical Schematic, GS-4047, AS / CE

(from serial numbers GS4712C-101 to GS4715C-2130, GS4714D-101 to GS4715D-749)

https://truckmanualshub.com/

Electrical Schematic, GS-4047, AS / CE

(from serial numbers GS4712C-101 to GS4715C-2130, GS4714D-101 to GS4715D-749)

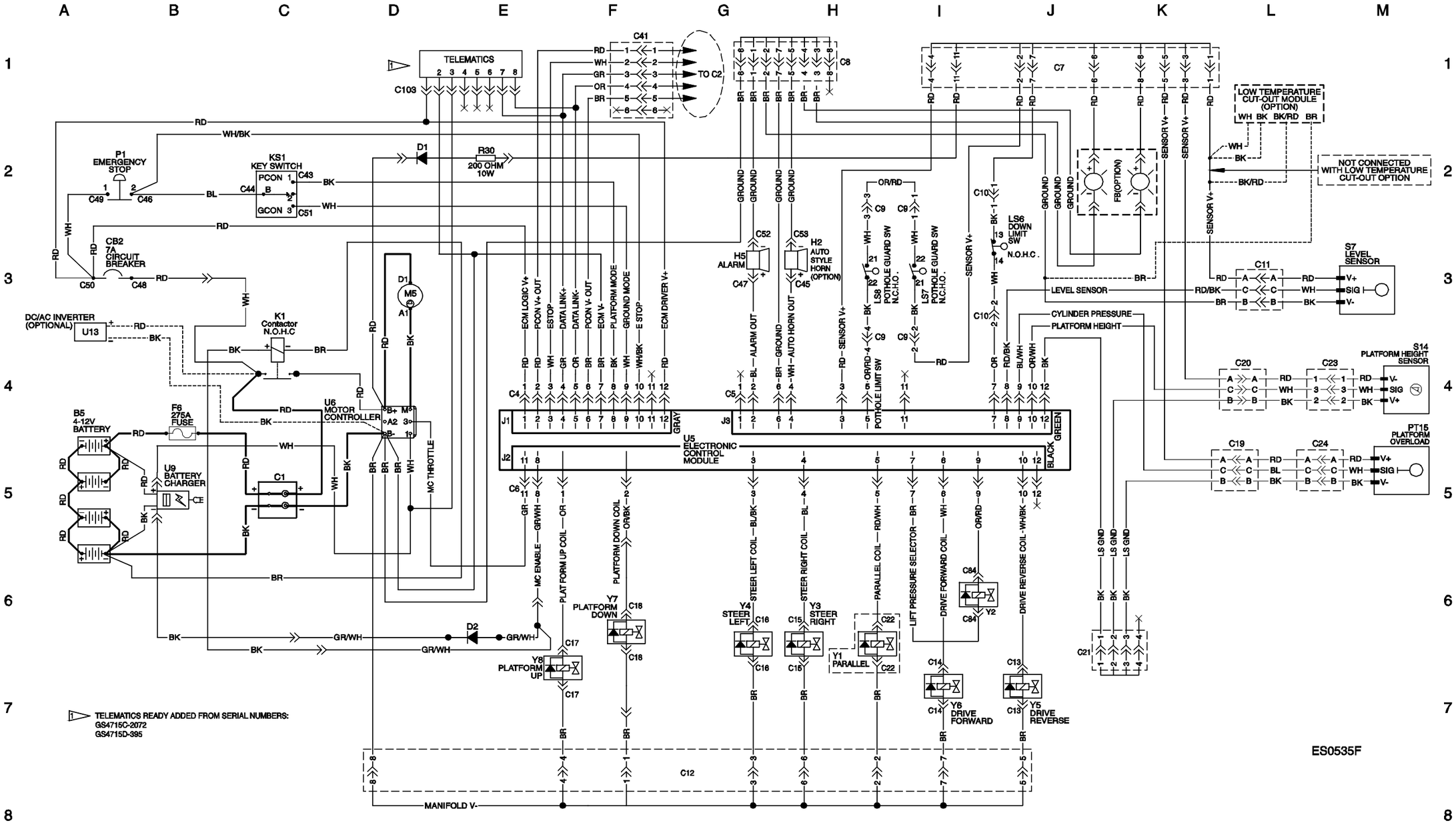

https://truckmanualshub.com/

Electrical Schematic, GS-4047, AS / CE

(from serial numbers GS4712C-101 to GS4715C-2130, GS4714D-101 to GS4715D-749)

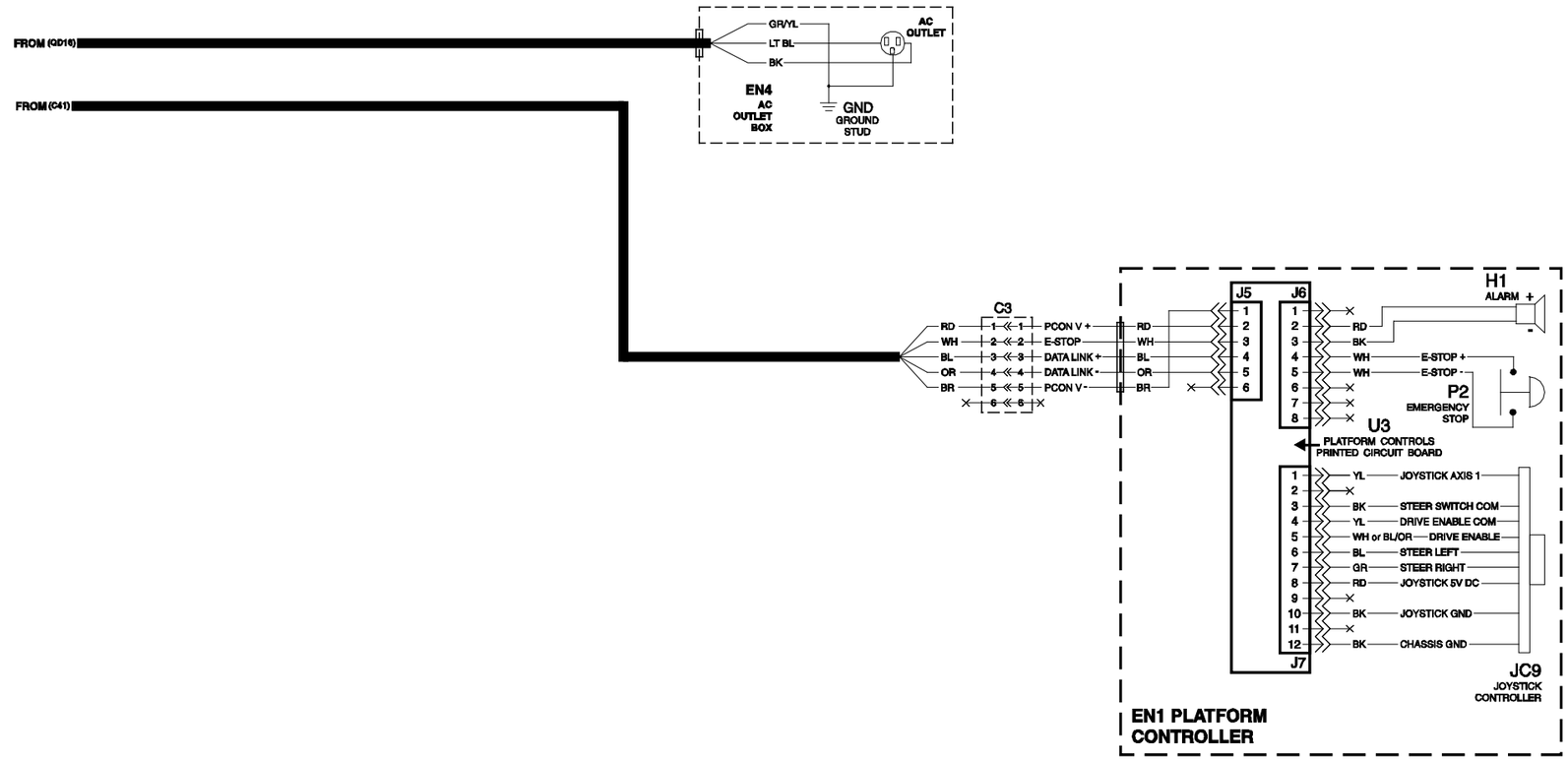

https://truckmanualshub.com/

Electrical Schematic, GS-4047, AS / CE

(from serial numbers GS4712C-101 to GS4715C-2130, GS4714D-101 to GS4715D-749)

https://truckmanualshub.com/

Electrical Schematic, GS-4047, AS / CE

(from serial number GS4715C-2131, GS4715D-750 to GS4716D-3101)

https://truckmanualshub.com/

Electrical Schematic, GS-4047, AS / CE

(from serial number GS4715C-2131, GS4715D-750 to GS4716D-3101)

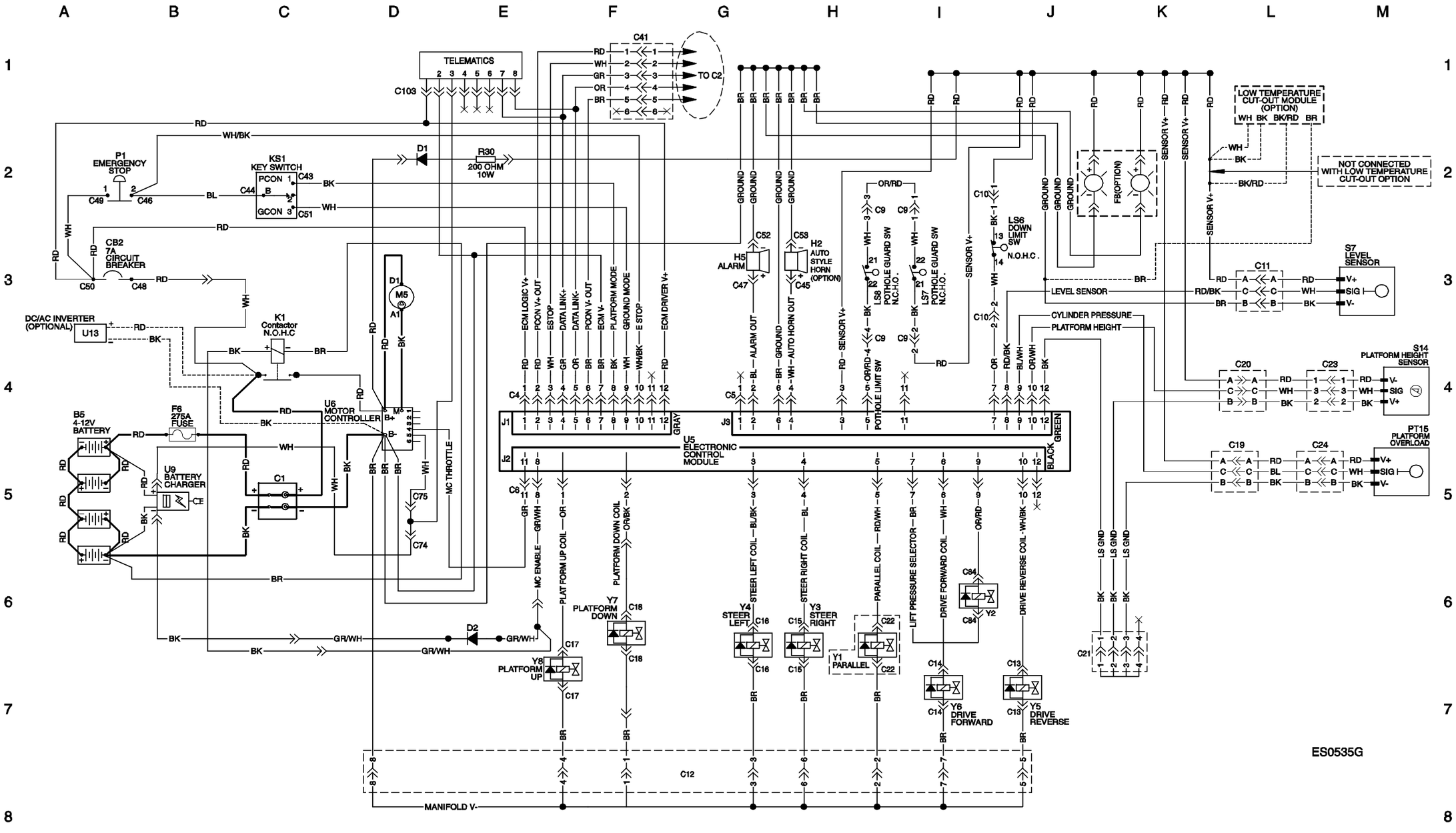

https://truckmanualshub.com/

Electrical Schematic, GS-4047, AS / CE

(from serial number GS4715C-2131, GS4715D-750 to GS4716D-3101)

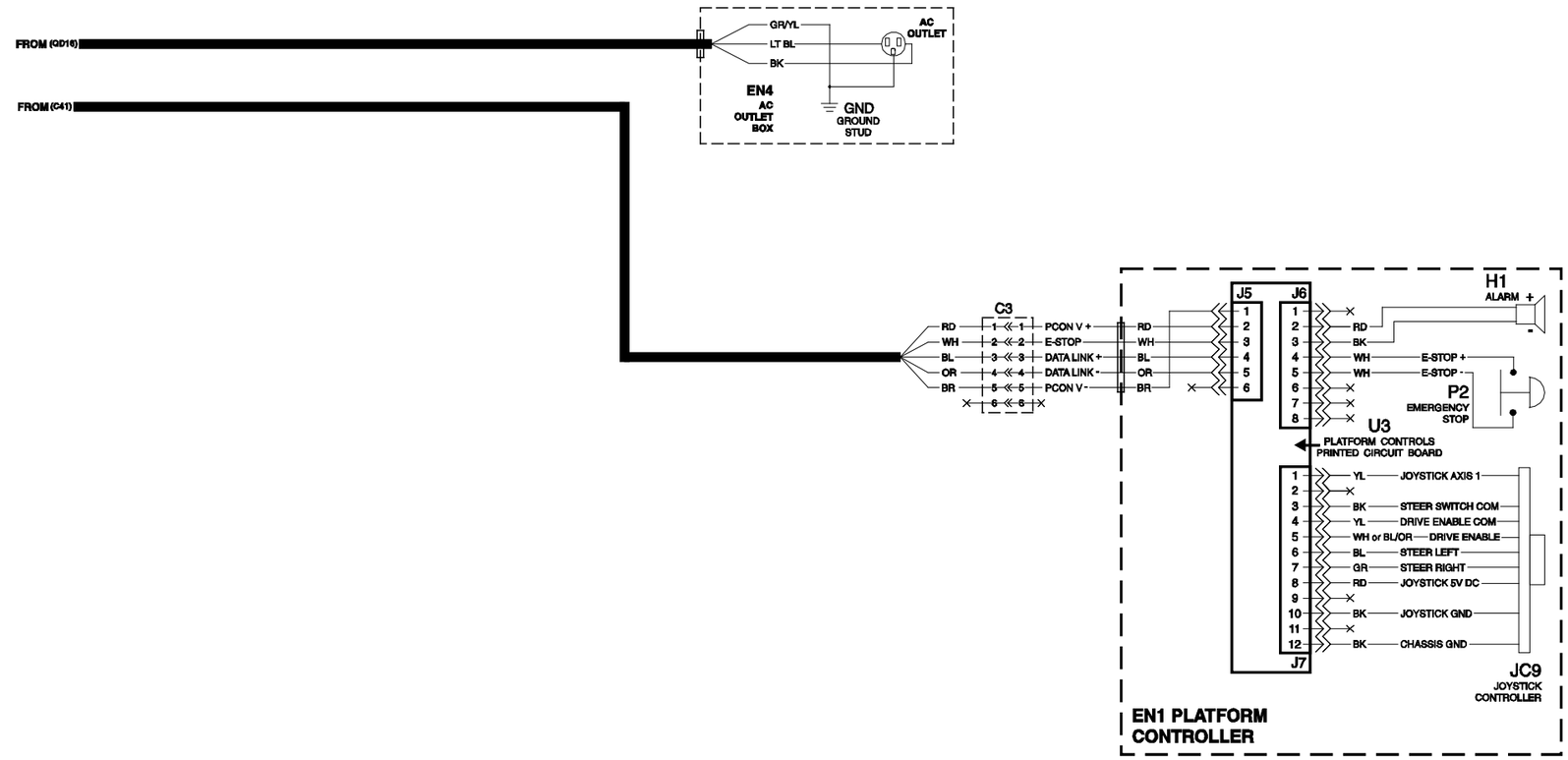

https://truckmanualshub.com/

Electrical Schematic, GS-4047, AS / CE

(from serial numbers GS4715C-2131, GS4715D-750 to GS4716D-3101)

https://truckmanualshub.com/

Electrical Schematic, GS-4047, AS / CE

(from serial number GS4716D-3102)

https://truckmanualshub.com/

Electrical Schematic, GS-4047, AS / CE

(from serial number GS4716D-3102)

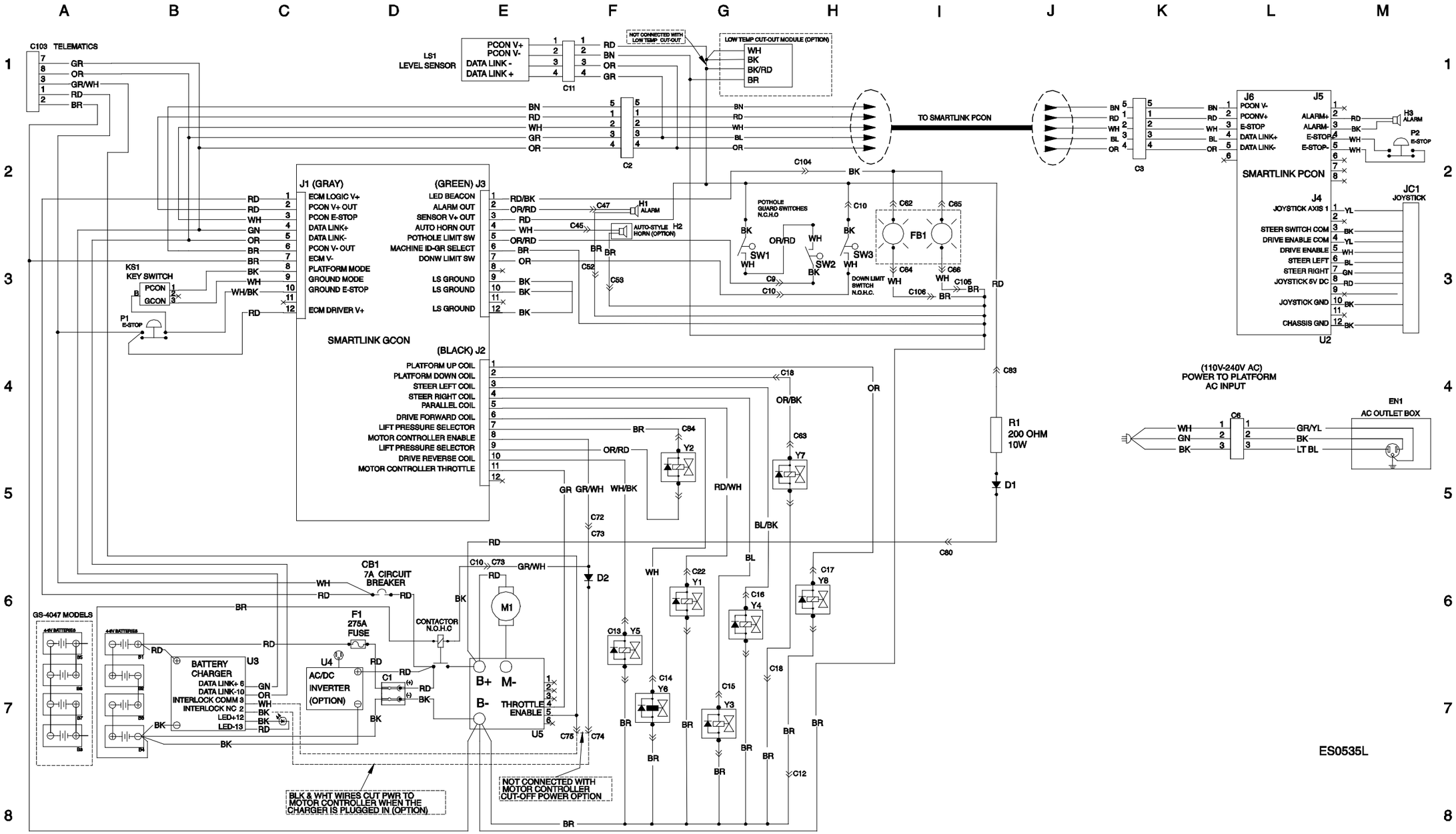

https://truckmanualshub.com/

Electrical Schematic • Foot Switch (option) All Models

https://truckmanualshub.com/

Electrical Schematic • Foot Switch (option) All Models

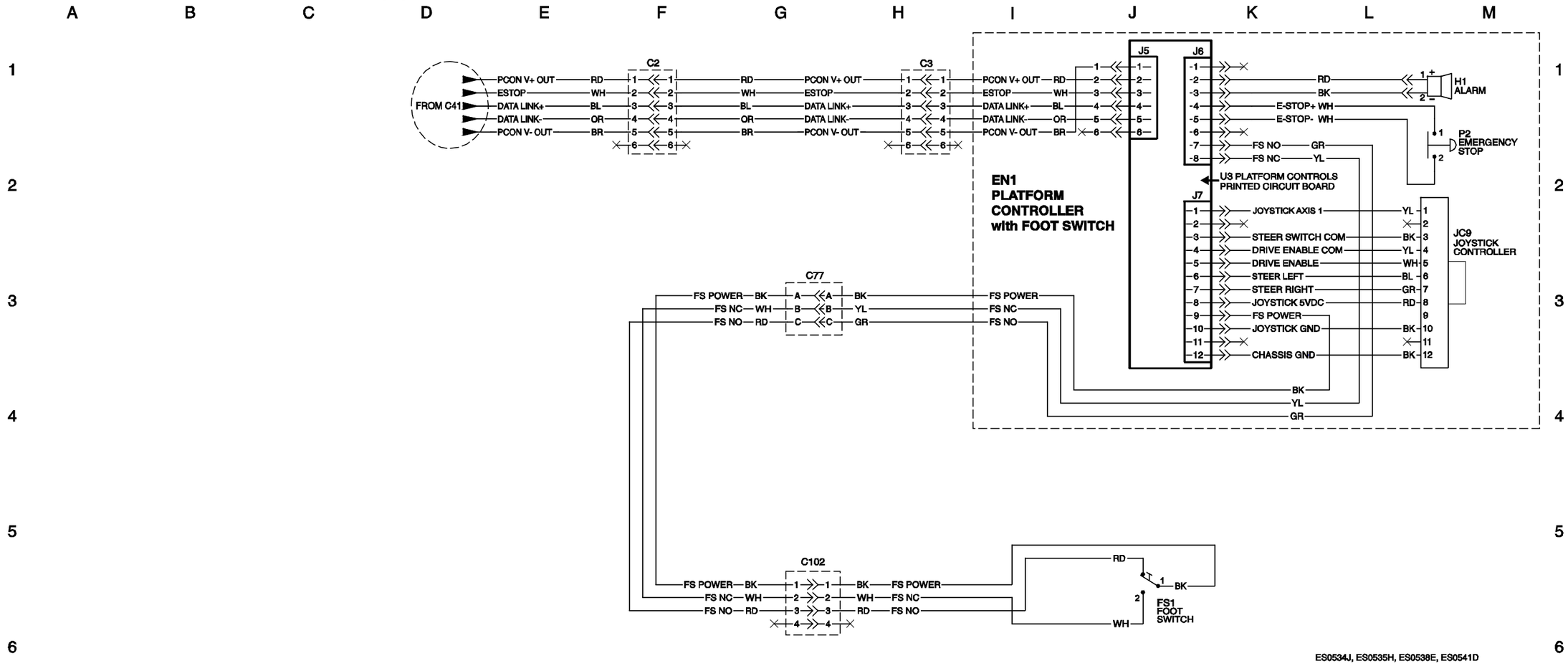

ES0534J, ES0535H, ES0538E, ES0541D

https://truckmanualshub.com/

California Proposition 65

WARNING

Operating, servicing and maintaining this equipment, passenger vehicle or off-highway motor vehicle can expose you to chemicals including engine exhaust, carbon monoxide, phthalates, and lead, which are known to the State of California to cause cancer and birth defects or other reproductive harm. These chemicals can be emitted from or contained in other various parts and systems, fluids and some component wear by-products. To minimize exposure, avoid breathing exhaust, do not idle the engine except as necessary, service your equipment and vehicle in a well-ventilated area and wear gloves or wash your hands frequently when servicing your equipment or vehicle and after operation. For more information go to www.P65Warnings.ca.gov/passenger-vehicle.

Distributed By: