https://truckmanualshub.com/

WSM

WORKSHOP MANUAL
KUBOTA EXCAVATOR

KX91-3S·α, 101-3α
KX121-3S·α,161-3S·α
U35S,U35-3S·α, U45-3S·α

Minor change Chapter

Kubota

Code No.97899-61260

https://truckmanualshub.com/

Record of Revisions

Symbol	Date	Main Revised Points & Corrective Measures	Person-in-charge
△1			
△2			
△3			
△4			

CONTENTS

I Sales Engineering Section I-1

A. Quick feature chart I-2

B. Feature discriptions I-4

C. New innovations I-6

D. Specifications: Super series (KTC, KCL, KTA-version) I-7

II Service Engineering Section II-1

A. General outline II-2

B. Finger control service port system II-22

C. Hydraulic system modification II-57

D. Hydraulic circuit diagram II-91

E. Engine upgrade II-109

F. Electrical system II-114

EU-version

KX91-3α, KX101-3α,KX121-3α, KX161-3α
U35-3α, U45-3α

PP-version

KX91-3S, KX121-3S, KX161-3S
U35S, U35-3S, U45-3S

Note: EU-version is for KE, KUK, and KBM. PP-version is for KTC, KCL, and KTA.

This WSM minor change edition has been compiled to explain the main contents of the minor change, such as new service port system, new auto-idle system, some hydraulic system change, engine upgrade for KX161-3S, etc.
As for the service information which are identical to the machines before minor change, please refer to the correspondent WSM.

I Sales Engineering Section

A. Quick feature chart.....I-2

B. Feature discriptions.....I-4

C. New innovations.....I-6

D. Specifications: Super series (KTC, KCL, KTA-version) I-7

A. Quick feature chart

a. KX91-3S, KX91-3α, KX101-3α, U35S, U35-3S, U35-3α

Basic performance improved (new)
Greater working range of this class
(1) Maximum digging and dumping heights
(2) Maximum digging depth

Safeness upgraded
(1) Full-scale 4-post ROPS/FOPS canopy
(3) Standard equipped with ROPS/FOPS cabin (cab type)(with steel-framed skylight)
(4) Engine neutral start
(5) Travel lock
(6) Master key-compatible immobilizer (option)

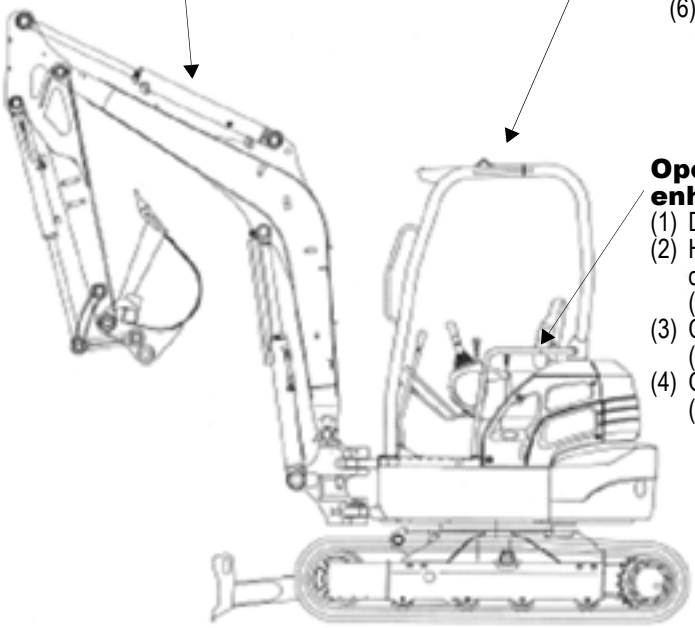

Operator's comfort enhanced
(1) Digital navigation system
(2) Heater with outside-air inlet defroster (standard on cab type)
(3) Cup holder (standard on cab type)
(4) Optional headlights (option on cab type)

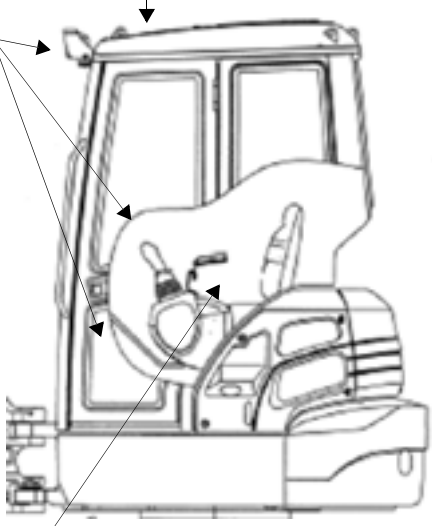

Maintainability
(1) Hydraulic components collectively located on the right machine side
(2) Right hood fully opened
(3) Sectional dozer hose, etc.

Better maneuverability
(1) Service port local control (wrist rest type)
(2) Travel bi-speed button (dozer lever)
(3) Independent swing pedal on the left side (hydraulic pilot)

b. KX121-3S, KX121-3α, KX161-3S, KX161-3α, U45-3S, U45-3α

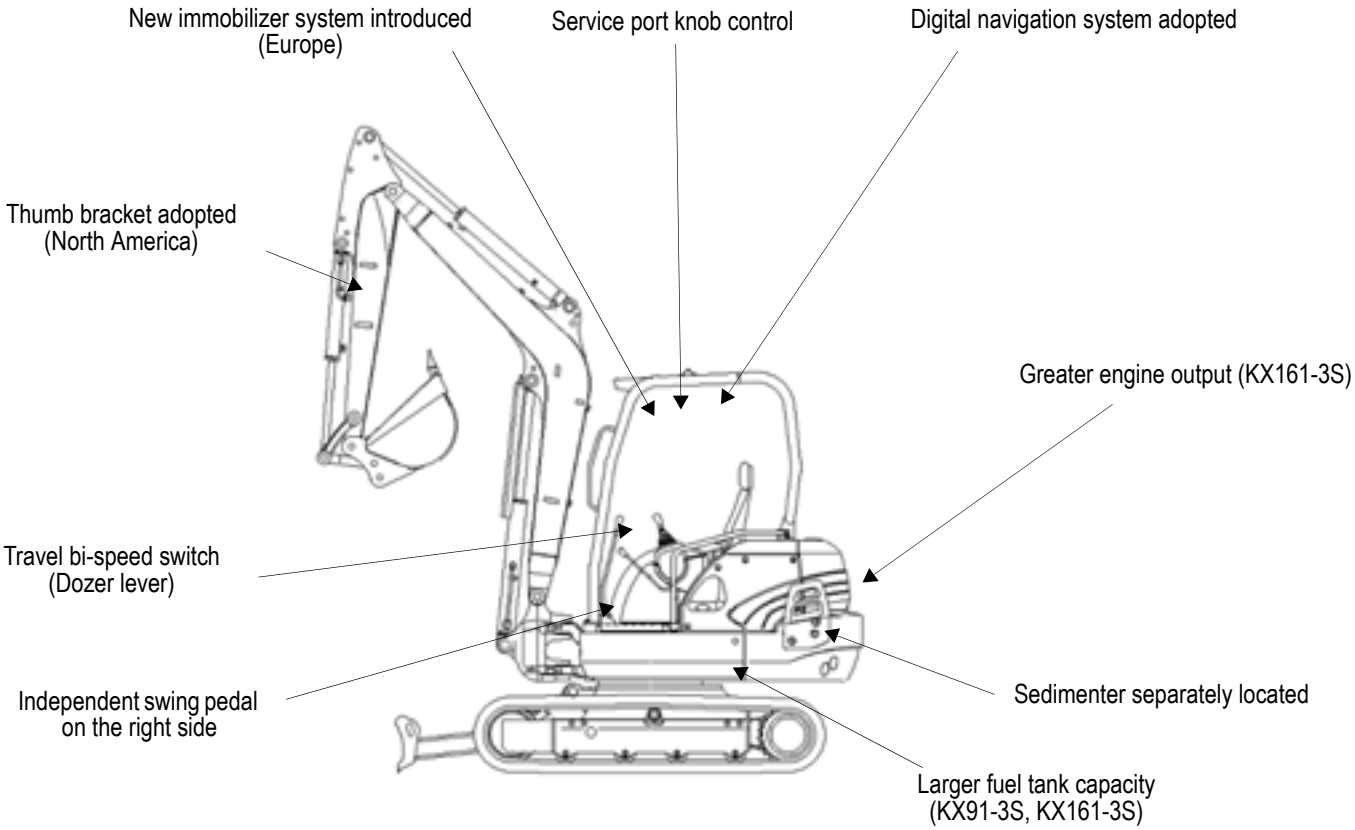

North America, Australia, Europe

B. Feature discriptions

(Super series)

Safety
With our Engine Start Lockout System, the engine cranks only when the safety levers are raised. Our safety Lever Lockout System helps prevent unexpected excavator and attachment movement when entering or exiting the unit. An Auto House Parking Brake automatically locks the house in the position it was in when the engine was shut off. This means that a swing lock pin is no longer required, making the excavator more compact during transport and secure when parked on an incline. And an OSHA certified ROPS/FOPS canopy and cab protects against rollovers or falling objects.

Boom operation
Kubota's Hydraulic Matching System allows easy, simultaneous and smooth operations of the boom, arm, bucket and house swing. Perfectly matched speed, power and cylinder timing deliver extraordinary responsiveness, even with the slightest operator movements or in the toughest conditions (The KX121-3 and KX161-3 feature the Load Sensing Hydraulic System).

Strongest bucket breakout force in its class
Kubota's Hydraulic Matching system is unmatched for power or ease of use. Load sensing hydraulics, which automatically regulate and distribute optimum oil amounts to each cylinder, make it ideal for your toughest trenching projects or your lightest dozing tasks. In any situation, you can always rely on the KX-3 Super Series for complete work efficiency.

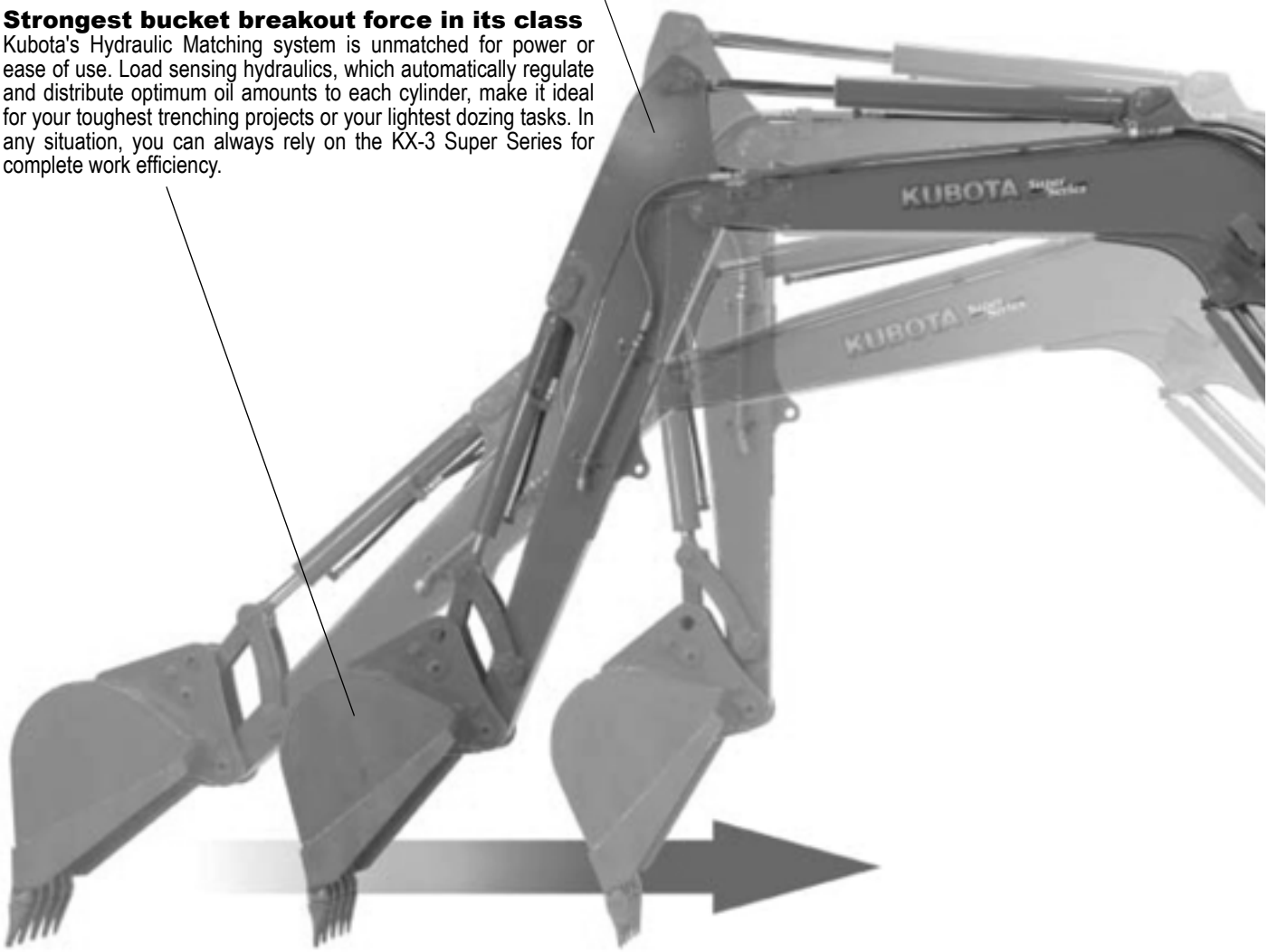

Wide Working Range
The KX-3 Super Series' powerful and responsive front working group is perfect for all your digging, lifting and loading jobs. Plus, with increases and improvements to our bucket capacities, reach and digging depths, the Super Series exceed many of the latest construction site requirements.

Operator comfort

Get total comfort from a spacious operating area that features ultra quietness, deluxe climate control and a high back suspension-engineered seat with adjustable wrist rests. Well-placed controls and levers provide an increase in deck space and foot room. A lowsound-level cab design reduces engine vibration to a minimum. Our ergonomic seat and wrist supports adjust to your individual posture. And with T.P.S.S. technology, change quickly between ISO and SAE operating patterns without tools or leaving your seat, and with only the flick of a switch. Combined, these advantages reduce fatigue while helping to maintain your peak performance (A/C available only on KX121-3 and KX161-3 models).

Easy maintenance

The KX-3 Super Series not only make daily maintenance a breeze, but also make more-detailed periodic maintenance hassle-free as well. Wide opening side and rear covers, as well as centrally located components, give you quick and easy access for the servicing of vital areas like the engine, the fuel/water separator, the radiator, coolant, air filter, control valve and hydraulic tank.

KUBOTA engine

The ultra powerful, incredibly dependable Kubota diesel engines deliver unmatched horsepower while minimizing emissions to meet EPA standards. They produce quick starts in temperatures as low as -4°F, low sound as well as low vibration. They even then follow through with superior fuel-efficiency.

Extraordinary stability and lifting capacity

The KX-3 Series is equipped with innovative and superior counter balancing technology for increased excavator stability. Long tumbler distance, a lower center of gravity and Double Outer Flanged Lower Track Rollers combine to deliver safe and effective performance when working over the side, with hydraulic attachments mounted or when lifting a broad range of heavy objects.

C. New innovations

▶▶▶ DIGITAL PANEL

Informative, interactive and functional. Kubota's all-new liquid crystal display (LCD) panel accurately shows easy-to-understand diagnostics and digital readings. The Kubota Intelligent Control System (KICS) will even alert the operator to when routine maintenance is due. Plus, when filling-up with fuel, the KICS informs the operator that the tank is nearly full. The panel reduces excavator downtime and repair fees for a decrease in total operating costs.

Language selection display

Information when service time comes

Low fuel display

▶▶▶ THUMB BRACKET

The optional hydraulic thumb opens up opportunities for loading and material handling tasks. It allows you to pinch material between the thumb and bucket, retracting for normal excavation. Installation time is significantly reduced with the factory installed

▶▶▶ FUEL-WATER SEPARATOR

The Water Separator has been relocated to an easy to reach position under the improved Fuel Filter. This gives the Super Series Models with enhanced fuel and water filtration, increased durability and greater overall excavator performance.

▶▶▶ USER-FRIENDLY OPERABILITY

SHORT STROKE OPERATING LEVER

The new operating levers require less effort and shorter movement, increasing control, responsiveness and comfort. With only the slightest flick of the wrist, smooth excavator operation and reduced operator fatigue are assured.

2 SPEED SWITCH

The new 2-Speed Travel Switch is conveniently mounted on the dozer lever for easier operation and control. It allows increased floor space as well as advanced user-friendly travel speed changes.

NEW WRIST RESTS

Set the new, custom adjustable armrests to your favorite position, or just move them out of the way. Either way, they help reduce arm movement and operator fatigue for increased job efficiency.

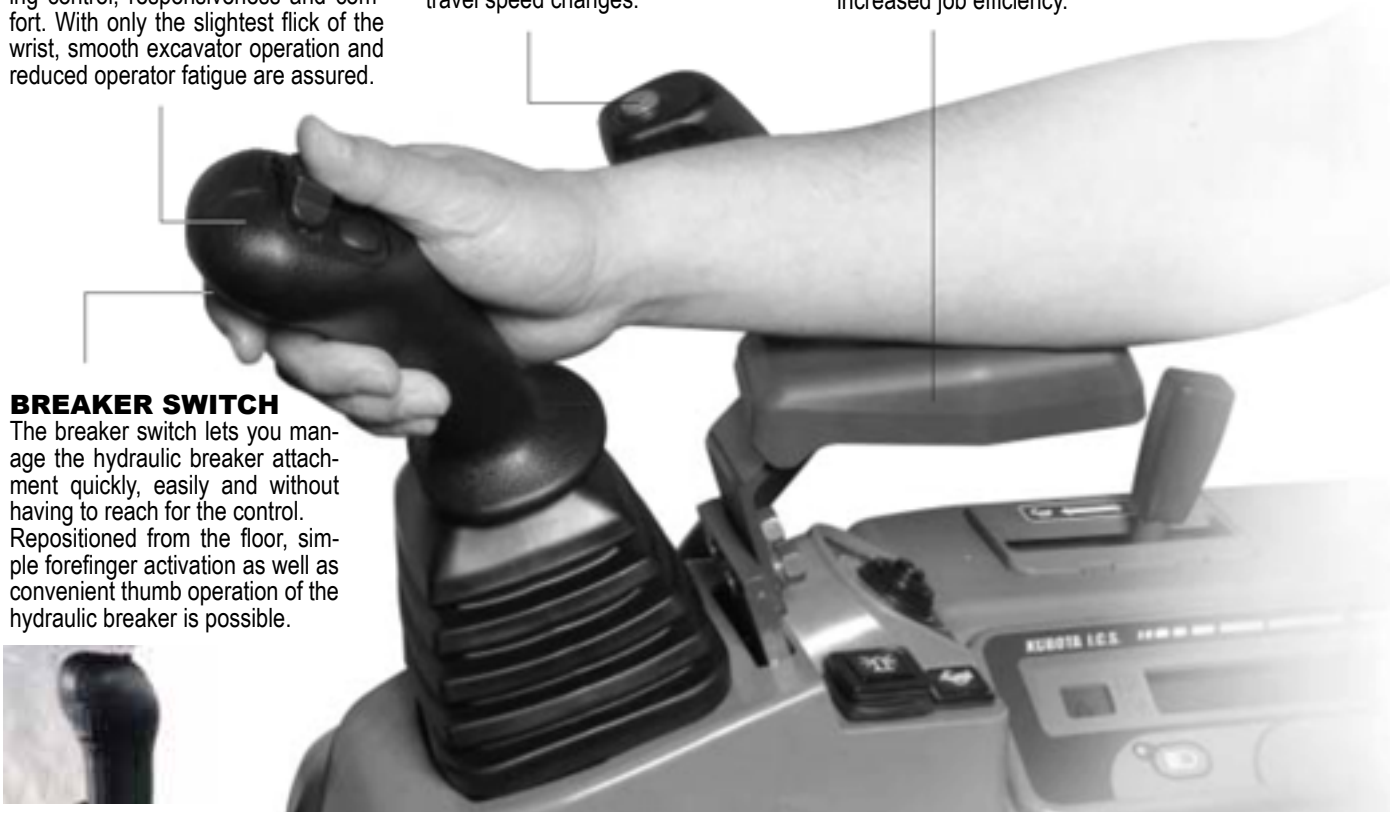

BREAKER SWITCH

The breaker switch lets you manage the hydraulic breaker attachment quickly, easily and without having to reach for the control. Repositioned from the floor, simple forefinger activation as well as convenient thumb operation of the hydraulic breaker is possible.

D. Specifications: Super series (KTC, KCL, KTA-version)

1.Main machine specifications

Model				KX91-3S	U35S / U35-3S	KX121-3S	KX161-3S
Type of ROPS/FOPS				Canopy / Cab	Canopy / Cab	Canopy / Cab	Canopy / Cab
Type of tracks				Steel / Rubber	Steel / Rubber	Steel / Rubber	Steel / Rubber
Engine	Model			Kubota D1503-M	Kubota D1503-M	Kubota V2203-M	Kubota V2403-M
	Output (SAE 1349 gross)		HP(kW)/rpm	28.0 (20.9) / 2300	28.0 (20.9) / 2300	42.0 (30.7) / 2250	47.0 (34.6) / 2200
	Displacement		cu.in. (cc)	91.5" (1499)	91.5" (1499)	134.1" (2197)	148.5" (2434)
Dimensions	Overall length		ft.in. (mm)	15'7" (4760)	15'5" (4695)	16'9" (5090)	18'8" (5540)
	Overall height	canopy	ft.in. (mm)	8'0" (2440)	8'0" (2440)	8'3" (2495)	8'4" (2540)
		cab	ft.in. (mm)	8'0" (2440)	8'0" (2440)	8'2" (2480)	8'4" (2540)
	Overall width		ft.in. (mm)	5'1" (1550)	5'7" (1700)	5'7" (1700)	6'5" (1960)
	Min. ground clearance		in. (mm)	11.6" (295)	11.4" (290)	13.0" (330)	12.6" (320)
Hydraulic system	Pump capacity		GPM (l/min)	10.9 (41.4) variable × 2 5.5 (20.9) Gear × 1	10.3 (39.1) × 2 5.5 (20.7) × 1	25.0 (94.5)	31.4 (118.8)
	Auxiliary hydraulic flow		GPM (l/min)	10.9 (41.4)	10.3 (39.1)	15.9 (60.0)	19.3 (73)
	Max. breakout force	Bucket	lbs.(kgf)	8059 (3655)	8397 (3809)	8754 (3970)	11118 (5043)
		Arm	lbs.(kgf)	3592 (1629)	4222 (1915)	3947 (1790)	4967 (2253)
Drive system	Travel Speed	Low	mph (km/h)	1.9 (3.1)	1.9 (3.0)	1.7 (2.7)	1.6 (2.5)
		High	mph (km/h)	2.9 (4.8)	2.9 (4.6)	3.1 (5.0)	2.9 (4.6)
	Max. traction force		lbs.(kgf)	5600 (2540)	6098 (2766)	9697 (4398)	12861 (5833)
	Tumbler distance		ft.in. (mm)	5'1" (1560)	5'6" (1665)	5'8" (1710)	6'6" (1990)
	Crawler length		ft.in. (mm)	6'7" (2000)	6'11" (2100)	7'2" (2175)	8'2" (2500)
	Shoe width		in. (mm)	11.8" (300)	11.8" (300)	13.8" (350)	15.7" (400)
	Ground contact pressure	Canopy Cab Rubber/ Steel	psi (kgf/cm2)	4.64 (0.33) / 4.70 (0.33)	4.7 (0.33) / 4.8 (0.34)	4.41 (0.31) / 4.55 (0.32)	4.27 (0.30) / 4.41 (0.31)
		Rubber/Steel	psi (kgf/cm2)	4.70 (0.33) / 4.56 (0.32)	4.8 (0.34) / 5.0 (0.35)	4.41 (0.31) / 4.41 (0.31)	3.27 (0.23) / 3.41 (0.24)
Swing system	Unit swing speed		rpm	9.4	8.9	9.4	9.3
	Boom swing angle	Left	degree	80	70	80	80
		Right	degree	50	50	50	50
Blade	Dimensions	Width	ft.in. (mm)	5'1" (1550)	5'7" (1700)	5'7" (1700)	6'5" (1960)
		Height	in. (mm)	13.2" (335)	13.2" (335)	13.8" (350)	15.4" (390)
	Max.lift above ground		in. (mm)	14.6" (370)	14.6" (370)	15.7" (400)	17.9" (455)
	Max.drop below ground		in. (mm)	14.6" (370)	14.6" (370)	15.9" (405)	14.8" (375)
Hydraulic oil (reservoir/system)			gal (l)	9.5 (36) / 14.5 (55)	9.5 (36) / 14.5 (55)	11.6 (44) / 17.7 (67)	11.6 (44) / 17.7 (67)
Fuel reservoir			gal (l)	13.2 (50)	10.6 (40)	16.9 (64)	18.5 (70)
Operating weight Including		Canopy Rubber/Steel	lbs.(kgf)	7110 (3225) / 7319 (3320)	8025 (3640) / 8234 (3735)	9063 (4110) / 9283 (4210)	11532 (5230) / 12348 (5600)
operator's weight 175lbs.		Cab Rubber/Steel	lbs.(kgf)	7330 (3325) / 7540 (3420)	8267 (3750) / 8477 (3845)	9261 (4200) / 9371 (4250)	11698 (5305) / 12513 (5675)

2.DIMENSIONS

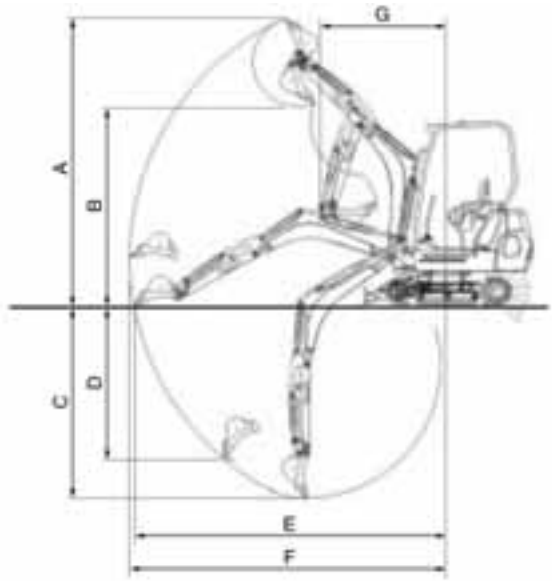

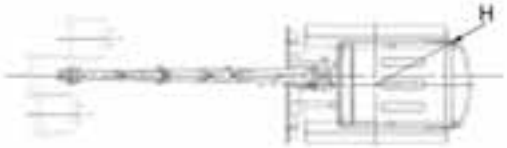

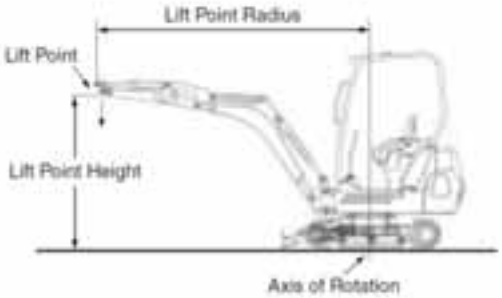

3.WORKING RANGE

Model				KX91-3S	U35S	KX121-3S	KX161-3S
A	Max. digging height		ft.in. (mm)	16'3" (4940)	16'3" (4945)	17'10" (5420)	18'9" (5715)
B	Max. dumping height		ft.in. (mm)	11'7" (3530)	11'7" (3525)	12'9" (3890)	13'8" (4155)
C	Max. digging depth		ft.in. (mm)	10'5" (3185)	10'4" (3140)	11'6" (3505)	12'7" (3830)
D	Max. vertical digging depth		ft.in. (mm)	7'10" (2390)	7'4" (2230)	8'2" (2480)	8'6" (2585)
E	Max. digging radius @ ground		ft.in. (mm)	16'10" (5135)	16'11" (5145)	18'0" (5475)	20'1" (6130)
F	Max. digging radius		ft.in. (mm)	17'3" (5245)	17'3" (5260)	18'5" (5600)	20'6" (6260)
G	Min. turning radius	W/O	ft.in. (mm)	6'2" (1870)	6'7" (2015)	6'9" (2060)	7'11" (2420)
		W swing	ft.in. (mm)	4'9" (1440)	5'3" (1603)	5'6" (1665)	6'5" (1955)
H	Min. tail turning radius		ft.in. (mm)	4'4" (1310)	33.5" (850)	4'3" (1300)	3'7" (1090)

The company reserves the right to change the above specifications without notice. This brochure is for descriptive purpose only.
Please contact your local Kubota dealer for warranty infomation. For your safety, KUBOTA strongly recommends the use of a Rollover Protective structure (ROPS) and seat belt almost all applications.

4.LIFTING CAPACITY

		U35S						KX91-3S						KX121-3S						KX161-3S					
LIFT POINT HEIGHT (ft)		LIFTING CAPACITY OVER-FRONT BLADE DOWN			LIFTING CAPACITY OVER-SIDE			LIFTING CAPACITY OVER-FRONT BLADE DOWN			LIFTING CAPACITY OVER-SIDE			LIFTING CAPACITY OVER-FRONT BLADE DOWN			LIFTING CAPACITY OVER-SIDE			LIFTING CAPACITY OVER-FRONT BLADE DOWN			LIFTING CAPACITY OVER-SIDE		
		unit=1000lba			unit=1000lba			unit=1000lba			unit=1000lba			unit=1000lba			unit=1000lba			unit=1000lba			unit=1000lba		
		LIFT POINT RADIUS (ft)			LIFT POINT RADIUS (ft)			LIFT POINT RADIUS (ft)			LIFT POINT RADIUS (ft)			LIFT POINT RADIUS (ft)			LIFT POINT RADIUS (ft)			LIFT POINT RADIUS (ft)			LIFT POINT RADIUS (ft)		
		8	12	MAX	8	12	MAX	8	12	MAX	8	12	MAX	8	12	MAX	8	12	MAX	8	12	MAX	8	12	MAX
GL	6	2.13	1.61	-	2.13	1.42	-	1.78	1.42	1.36	1.78	1.30	1.03	3.09	2.19	2.01	3.09	1.83	1.46	4.29	2.6	2.12	4.29	2.59	1.66
	4	2.79	1.76	1.58	2.52	1.39	1.10	2.42	1.58	1.43	2.29	1.27	1.01	4.03	2.44	2.15	3.15	1.78	1.43	-	3	2.25	-	2.49	1.63
	2	3.28	1.91	1.63	2.42	1.35	1.08	2.95	1.74	1.50	2.18	1.23	0.99	4.66	2.67	2.27	3.02	1.73	1.41	3.9	3.33	2.36	3.9	2.4	1.59
	0	3.46	1.99	-	2.37	1.33	-	3.22	1.84	1.53	2.11	1.20	0.97	4.89	2.81	2.34	2.96	1.70	1.38	4.73	3.33	2.43	4.3	2.34	1.57

Machine with ROPS canopy and rubber crawler, without bucket

II Service Engineering Section

A. General outline.....II-2
a. New engineering points..... II-2
b. Photos of main modified parts..... II-3
c. Major specifications incorporated..... II-4
d. Quantity water and oil..... II-5
e. Quality specifications..... II-6

B. Finger control service port system.....II-22
a. Feature and purpose..... II-22
b. Outline of control system..... II-23
c. Hydraulic circuit diagram..... II-25
d. Knob structure and function..... II-26
e. Initial settings of the knob..... II-32
f. S/P valve start point setting..... II-34
g. Manual feeling setting..... II-40
h. Panel display operation flow chart..... II-42
i. Proportional control solenoid valve (S/P valve)..... II-51
j. Other controls..... II-55
k. Troubleshooting..... II-56

C. Hydraulic system modification.....II-57
a. Outline..... II-57
b. Hydraulic pump: KX161-3s, KX161-3·α..... II-58
c. Control valve..... II-63
d. Accumulator..... II-68
e. Hydraulic system line..... II-73
f. Service port (S/P) solenoid valve..... II-82
g. Travel motor: KX91-3S: PP-version..... II-85
h. Travel motor minor change: KX121-3S·α, 161-3S·α, U45-3S·α..... II-89

D. Hydraulic circuit diagram.....II-91

E. Engine upgrade.....II-109
a. General..... II-109
b. Engine specifications..... II-109
c. Engine performance curve..... II-111

F. Electrical system.....II-114

A. General outline

a. New engineering points

No	New contents	PP-version (KTC, KCL, KTA)		EU-version			
		KX91-3S, U35S, U35-3S	KX121-3S, KX161-3S, U45-3S	KX91-3α, KX101-3α	U35-3α	KX121-3α, KX161-3α	U45-3α
8	Digital panel	○	○	○	○	○	○
4	Arm with thumb bracket, option	○	○	○	○	○	○
1	Finger control service port	○	○	○	○	○	○
3	Breaker switch	○	○	○	○	○	○
7	Two speed switch	○	○	○	○	○	○
6	Fuel-water separator	○	○	○	○	○	○
9	Anti-theft system	-	-	○	○	○	○
5	Accumulator in pilot control line	○	○	○	○	○	○
2	Proportional control solenoid valve	○	○	○	○	○	○
10	Upgraded engine V2403-M	-	KX161-3S PP-version only ○	-	-	-	-

b. Photos of main modified parts

No.1 Knob switch

No.8 Digital meter panel

No.8 Digital meter panel, AI-version

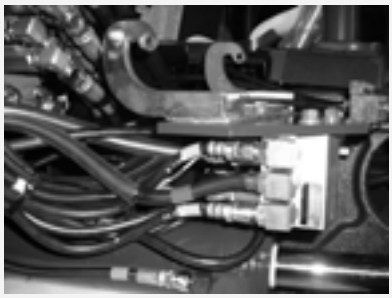

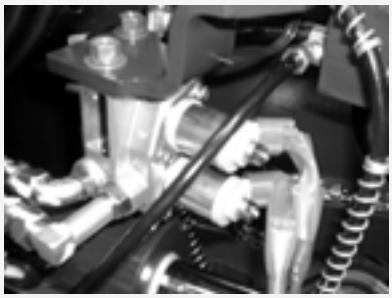

No.2 S/P solenoid valve

No.4 Arm with thumb bracket

No.5 Accumulator in pilot line

No.6 Fuel-water separator

No.7 Two speed switch

No.9 Anti-theft system
(EU-version)

c. Major specifications incorporated

- KX91-3S, KX91-3α, KX101-3α, U35S, U35-3S, U35-3α -

Specs.	KX91-3S		KX91-3α	KX101-3α	U35S	U35-3S	U35-3α
	KTC, KCL	KTA	EU	EU	KTC, KCL	KTA	EU
STD arm	1550mm		1275mm	1350mm	1350mm	1350mm	1350mm
Rubber track	300mm		←	←	300mm	←	←
Iron track	300mm		←	←	300mm	←	←
Cab (Rops / Fops)	○		←	←	○	○	←
Canopy (Rops / Fops)	○		←	←	○	○	←
Telescopic arm (1246 - 2046)	○	×	○	○	×	×	×
Bucket	Local content		←	←	Local content		←
Travel alarm	×	○	×	×	×	○	×
Canopy light	×	○	×	×	×	○	×
Arm rest	Wrist rest	○	Wrist rest	←	←	○	Wrist rest
TPSS	○		×	×	○		×
Engines type	D1503-M	←	←	←	←	←	←
Third line valve	×	×	○	○	×	×	○

- KX121-3S, KX121-3α, KX161-3S, KX161-3α, U45-3S, U45-3α -

Specs.		KX121-3S		KX121-3α	KX161-3S		KX161-3α	U45-3S	U45-3α
		KTC, KCL	KTA	EU	KTC, KCL	KTA	EU	KTA	EU
STD arm		1600mm	←	1300mm	1780mm	←	1480mm	1360mm	←
Rubber track		350mm	←	←	400mm	←	←	400mm	←
Iron track		350mm	←	←	400mm / 550mm	←	←	400mm / 550mm	←
Cab (Rops / Fops)		○		←	○	○	←	←	←
Canopy (Rops / Fops)		○		←	○	○	←	←	←
Telescopic arm (1246 - 2046)		×	×	×	×	×	×	×	×
Bucket		Local content		←	Local content		←	←	←
Travel alarm		×	○	×	×	○	×	○	×
Canopy light		×	○	×	×	○	×	○	×
Arm rest		Wrist rest	○	Wrist rest	←	○	Wrist rest	○	Wrist rest
TPSS		○		×	○		×	○	×
Engine type	STD	V2203-M-E2BH-2-N			V2403-M-E2BH-1			V2203-M-E2BH-2-N	
	Air con.	V2203-M-E2BH-3-N			V2403-M-E2BH-2			V2203-M-E2BH-3-N	
Third line valve			○			○			

d. Quantity water and oil

	Unit	KX91-3S KX91-3α	KX101-3α	U35S, U35-3S U35-3α	Remarks
Radiator	L gal	7.3 1.93	←	←	L.L.C
Reserve tank	L gal	1.6 0.42	←	←	
Engine Crank case	L gal	5.3 1.40	←	←	SAE10W30(CD)
Hydraulic oil Full	L gal	55.0 14.53	←	←	ISO 46
Hydraulic oil Tank	L gal	36.0 9.51	←	←	ISO 46
Wheel motor	L gal	0.5 0.13	←	←	SAE90 (API GL-4)
Track roller	cc gal	70 0.018	←	←	SAE30(CD)
Upper roller	cc gal	60 0.016	←	←	SAE30(CD)
Front idler	cc gal	80 0.02	←	←	SAE30(CD)
Fuel tank	L gal	46.5 12.30	←	40.6 10.6	

	Unit	KX121-3S KX121-3α	U45-3S U45-3α	KX161-3S KX161-3α	Remarks
Radiator	L gal	7.4 (7.7) 1.96 (2.04)	←	←	L.L.C
Reserve tank	L gal	1.1 0.29	←	0.5 0.13	
Engine Crank case	L gal	8.5 2.25	←	←	SAE10W30(CD)
Hydraulic oil Full	L gal	75 19.8	←	←	ISO 46
Hydraulic oil Tank	L gal	46 12.2	←	←	ISO 46
Wheel motor	L gal	0.5 0.13	←	0.9 0.24	SAE90 (API GL-4)
Track roller	cc gal	80 0.021	←	←	SAE30(CD)
Upper roller	cc gal	60 0.016	←	←	SAE30(CD)
Front idler	cc gal	80 0.021	←	50 0.013	SAE30(CD)
Fuel tank	L gal	64 16.9	←	←	

NOTE: In the super series, coolant amount has been increased due to the warming line of the service port value.

e. Quality specifications

Note: 1. Only those data with bold letter and with shadow are different from those of the previous models before modification.
2. **EU-version will be announced later.**

U35S (KTC, KCL), U35-3S (KTA), KX91-3S(KTC,KCL,KTA)
Machine specification : Service port, Wrist rest, STD-arm, KBT-cab, KBT-bucket.

No		Specificatios Items			Unit	U35S (KTC, KCL) U35-3S (KTA)	KX91-3S (KTC, KCL, KTA)	Remarks
Q1		**Main Speed JIS A8404**						
1	1	Machine size	Total length (Transport)		mm	4695 ± 94	4760 ± 95	
					inch	184.8 ± 3.7	187.4 ± 3.7	
	2		Total width		mm	1700 ± 17	1550 ± 16	
					inch	66.9 ± 0.7	61.0 ± 0.6	
	3		Total height (Canopy)		mm	2440 ± 24		
					inch	96.1 ± 0.9		
	4		Total height (Cabin)		mm	2440 ± 24		
					inch	96.1 ± 0.9		
2	1	Weight	Machine weight (Canopy)		kg	3560 ± 71	3225 ± 65	Fuel tank
					lbs	7848.4 ± 156.5	7109.8 ± 143.3	
	2		Machine weight (Cabin)		kg	3660 ± 73	3225 ± 67	
					lbs	8068.8 ± 160.9	7109.8 ± 147.7	
3	1	Performance	Swivel speed	L	rpm	9 ± 0.9	9.4 ± 0.9	
	2			R	rpm	9 ± 0.9	9.4 ± 0.9	
	3		Travel speed	Lubber F1	km/h	3.0 ± 0.3	3.1 ± 0.3	
					mph	1.86 ± 0.19	1.93 ± 0.19	
	4			Lubber F2	km/h	4.6 ± 0.5	4.8 ± 0.5	
					mph	2.86 ± 0.31	2.98 ± 0.31	
	5			Iron F1	km/h	2.9 ± 0.3	3.0 ± 0.3	
					mph	1.80 ± 0.19	1.86 ± 0.19	
	6			Iron F2	km/h	4.6 ± 0.5	4.8 ± 0.5	
					mph	2.86 ± 0.31	2.98 ± 0.31	
	7		Gradeability		deg	30	30	
4	1	Rear end min. turning radius			mm	850 ± 17	1310 ± 26	
					inch	33.5 ± 0.7	51.6 ± 1.0	
	2	Swivel frame rear ground clearance			mm	525 ± 11	530 ± 11	
					inch	20.7 ± 0.4	20.9 ± 0.4	
	3	Tambler center distance			mm	1670 ± 50	1560 ± 47	
					inch	65.7 ± 2.0	61.4 ± 1.9	
	4	Crawler total length			mm	2100 ± 63	2000 ± 60	
					inch	82.7 ± 2.5	78.7 ± 2.4	
	5	Crawler total width			mm	1700 ± 34	1550 ± 31	
					inch	66.9 ± 1.3	61.0 ± 1.2	
	6	Min. ground clearance			mm	285 ± 9	290 ± 9	
					inch	11.2 ± 0.4	11.4 ± 0.4	
5	1	Front attach-ment	Bucket heaped capacity	CECE	m3	–	0.077	
					yd3	–	0.01	
	2			SAE, JIS	m3	0.1	0.1	
					yd3	0.13	0.13	
	3		Bucket width		mm	555 ± 12	555 ± 11	Without side cut-ter
					inch	21.9 ± 0.5	21.9 ± 0.4	
	4		Swing angle	Canopy L	deg	70 ± 2	80 ± 2	
	5			Canopy R	deg	50 ± 2	48 ± 2	
	6			Cabin L	deg	±	80 ± 2	
	7			Cabin R	deg	±	48 ± 2	

No		Specificatios Items			Unit	U35S (KTC, KCL) U35-3S (KTA)	KX91-3S (KTC, KCL, KTA)	Remarks
5	8	Front attach-ment	Max. digging radius		mm	**5255 ± 79**	5245 ± 79	
					inch	**206.9 ± 3.1**	206.5 ± 3.1	
	9		Ground level Max. digging radius		mm	5140 ± 77	5135 ± 77	
					inch	202.4 ± 3.0	202.2 ± 3.0	
	10		Ground level Min. finish radius		mm	1755 ± 35	1410 ± 28	Bucket bottom horizontal
					inch	69.1 ± 1.4	55.5 ± 1.1	
	11		Max. digging depth		mm	3115 ± 62	3185 ± 64	
					inch	122.6 ± 2.4	125.4 ± 2.5	
	12		Max. vertical digging depth		mm	2185 ± 44	2390 ± 48	
					inch	86.0 ± 1.7	94.1 ± 1.9	
	13		Max. digging height	Conopy	mm	4890 ± 98	4875 ± 98	
					inch	192.5 ± 3.9	191.9 ± 3.9	
	14			Cabin	mm	4660 ± 93		
					inch	183.5 ± 3.7		
	15		Max. dump height	Conopy	mm	3470 ± 69		
					inch	136.6 ± 2.7		
	16			Cabin	mm	3265 ± 65		
					inch	128.5 ± 2.6		
	17		Max. dump height (Arm vertical)	Conopy	mm	1230 ± 37	965 ± 29	
					inch	48.4 ± 1.5	38.0 ± 1.1	
	18			Cabin	mm	1125 ± 34		
					inch	44.3 ± 1.3		
	19		Mini. turning radius	Conopy	mm	2065 ± 62	1940 ± 116	
					inch	81.3 ± 2.4	76.4 ± 4.6	
	20			Cabin	mm	2190 ± 66		
					inch	86.2 ± 2.6		
	21		Mini. turning radius (Left swing)	Conopy	mm	-		
					inch	-		
	22			Cabin	mm	-		
					inch	-		
6	1	Dozer	Width		mm	1700 ± 5	1550 ± 5	
					inch	66.9 ± 0.2	61.0 ± 0.2	
	2		Height		mm	335 ± 25	355 ± 10	
					inch	13.2 ± 1.0	14.0 ± 0.4	
	3		Max. lift above GL		mm	**370 ± 26**	375 ± 26	
					inch	**14.6 ± 1.0**	14.8 ± 1.0	
	4		Max. below GL		mm	**370 ± 26**	365 ± 26	
					inch	**14.6 ± 1.0**	14.4 ± 1.0	
Q2		**Main Specs JIS A8404**						
1	1	Bucket tooth slaggish			mm	70 >		
					inch	2.76 >		
	2	Tilt amount of front attachment			mm	10 >		
					inch	0.39 >		
	3	Dozer's declination			mm	10 >		
					inch	0.39 >		
2	1	Eccentric amount from swing center			mm			From swivel cen-ter
					inch			
	2	Distance to swing center			mm	72 ± 25.0	135 ± 25.0	
					inch	2.83 ± 1.0	5.31 ± 1.0	
3	1	Approach angle			deg	31.4 ± 3.5	30 ± 3	

No		Specificatios Items		Unit	U35S (KTC, KCL) U35-3S (KTA)	KX91-3S (KTC, KCL, KTA)	Remarks
4	1	Crawler height		mm	420 ± 8	430 ± 9	Include grouser on the spocket
				inch	16.54 ± 0.31	16.93 ± 0.35	
	2	Max. crawler height		mm	450 ± 9	455 ± 14	
				inch	17.72 ± 0.35	17.91 ± 0.55	
Q3		**Engine performance**					
1	1	"Max, engine rpm"	no load	rpm	2550 >		
	2		1 pump relief	rpm	-	-	
	3		2 pump relief	rpm	-	-	
	4		3 pump relief	rpm	-	-	Boom, arm, swivel
	5		2 pump relief	rpm	2300 <		
	6		Dozer+2 pump relief	rpm	2100 <		
2	1	Idler		rpm	**1050 ± 50**		
Q4		**Travelling performance**					
1	1	Travel motor block perfor-mance	L	mm	300 >		20 deg, 10 min
				inch	11.81 >		
	2	Travel motor block perfor-mance	Rubber	mm	300 >		
				inch	11.81 >		
2	1	Max, Traction force	F1	kgf	2766	2655	On the center
				kN	27.1	26.0	
				lbs	6098	5853	
	2		F2	kgf	1546	1485	
				kN	15.2	14.6	
				lbs	3408	3274	
3	1	Travel straight-ness	F1	mm	600 >		10m distance
				inch	23.62 >		
	2		F2	mm	600 >		
				inch	23.62 >		
	3		Dozer F1	mm	600 >		Dozer up & down 10m dis-tance
				inch	23.62 >		
	4		Dozer R1	mm	600 >		
				inch	23.62 >		
4	1	Track shoe sag distance	Iron	mm	75 to 80		
				inch	2.95 to 3.15		
	2		Rubber	mm	10 to 15		
				inch	0.39 to 0.59		
Q5		**Work performance**					
1	1	Boom lifting capacity		kgf	575	434	Front end, Arm extend bucket crowd, at tooth
				kN	5.6	4.3	
				lbw	1268	957	
	2	Arm digging force		kgf	1888	1629	Bucket tooth root
				kN	**18.5**	16.0	
				lbw	**4162**	3591	
	3	Bucket digging force		kgf	**2882 / 3810**	3655	Machine stance to JIS bucket tooth root
				kN	**28.3 / 37.4**	35.8	
				lbw	**6354 / 8400**	8058	
	4	Dozer force	down	kgf	**2652**	2841	Cutting edge down force at ground level
				kN	**26.0**	27.9	
				lbw	**5847**	6263	

No		Specificatios Items			Unit	U35S (KTC, KCL) U35-3S (KTA)	KX91-3S (KTC, KCL, KTA)	Remarks
2	1	Boom speed	Canopy	up 1st	sec	2.4 ± 0.3	2.1 ± 0.3	Oil temp. 50±5°C (122±41°F) Ground to max. height (excu-lude cushioning)
	2			up 2nd	sec	-		
	3			down	sec	3.0 ± 0.3	2.9 ± 0.3	
	4			down	sec	-		
	5		Cabine	up (G→T)	sec	-		
	6			up (L→T)	sec	-		
	7			down (T→G)	sec	-		
	8			down (T→L)	sec	-		
3	1	Arm speed		crowd	sec	3.1 ± 0.3		
	2			extend	sec	2.7 ± 0.3	3 ± 0.3	
4	1	Bucket speed		crowd	sec	2.6 ± 0.3	2.7 ± 0.3	Oil temp. 50±5°C (122±41°F)
	2			dump	sec	1.7 ± 0.3	1.9 ± 0.3	
5	1	Dozer speed		up (G→T)	sec	-		Max. down to max. up
	2			up (L→T)	sec	2.2 ± 0.3	2.1 ± 0.3	Max. up to max. down
	3			down (T→G)	sec	-		
	4			down (T→L)	sec	2.9 ± 0.3	2.8 ± 0.3	
6	1	Arm cylinder cavitation			mm	5 >		Oil temp. 95±5°C (203±41°F)
					inch	0.20 >		
7	1	Max. digging height radius	Canopy		mm	2800	2920 ± 292	
					inch	110.24	114.96 ± 11.50	
	2		Cabine		mm	3215 ± 322		
					inch	126.57 ± 12.68		
	3	Max. dump height radius	Canopy		mm	**2621 ± 157**	2790 ± 167	at bucket pin
					inch	**103.19 ± 6.18**	109.84 ± 6.57	
	4		Cabine		mm	**2961 ± 178**		
					inch	**116.57 ± 7.01**		
	5	Bucket bottom height at arm vertical	Canopy		mm	1525 ± 46	1265 ± 48	Bucket horizon-tal
					inch	60.04 ± 1.81	49.80 ± 1.89	
	6		Cabine		mm	1415 ± 42		
					inch	55.71 ± 1.65		
	7	Bucket wrist angle			degree	-	190 ± 3	
Q6		**Swivel, swing performance**						
1	1	Swivel torque		L	kgf·m	738	627	Arm extend,show/ Quick
					kN.m	7.2	6.1	
					ft·lbs	5338	4535	
	2			R	kgf·m	738	627	
					kN.m	7.2	6.1	
					ft·lbs	5338	4535	
2	1	Swivel angle		L	deg	15 <	20 , 19<	Bucket load=JIS heaped×1.8
	2			R	deg	15 <	20 , 19<	
3	1	Swivel block performance		L	deg	5 >	6 >	
	2			R	deg	5 >	6 >	
	3			L	deg	30 >		
	4			R	deg	30 >		
4	1	Swivel start-up speed		L	sec	2.5 ± 0.3	3 ± 0.3	0~90 deg swivel
	2			R	sec	2.5 ± 0.3	3 ± 0.3	

No		Specificatios Items			Unit	U35S (KTC, KCL) U35-3S (KTA)	KX91-3S (KTC, KCL, KTA)	Remarks
5	1	Swing speed	Canopy	L	sec	5.8 ± 0.3	5.9 ± 0.5	
	2			R	sec	4.6 ± 0.3	4.5 ± 0.5	
	3		Cabine	L	sec			
	4			R	sec			
6	1	Swing Lock		Swivel R&L	mm	10 >		90 deg-swivel, 100 times actual digging cylinder dislocation
					inch	0.39 >		
	2	Reciprocating motion	L / R	Swing	mm			90 deg-swivel, 100 times
					inch			
Q7		**Hydraulic performance**						
1	1	Relief pressure setting		P1	kgf/cm2	255 ± 5	245	Atpumpdelivery 50±5°C
					MPa	25.0 ± 0.5	24.0	
					bar	24.5 ± 24.5	24.5	
					psi	3627 ± 71	3485	
	2			P2	kgf/cm2	255 ± 5	245	
					MPa	25.0 ± 0.5	24.0	
					bar	24.5 ± 24.5	24.5	
					psi	3627 ± 71	3485	
	3			P3	kgf/cm2	207 ± 5	210	
					MPa	20.3 ± 0.5	20.6	
					bar	24.5 ± 24.5	24.5	
					psi	2944 ± 71	2987	
	4			P4	kgf/cm2	40 +3, -0		
					MPa	3.9 +0.3, -0		
					bar	3.9 +0.03, -0		
					psi	569 +43, -0		
2	1	Cylinder oil sealing capacity	Boom	50±5°C (122±41°F)	mm	6 >	20 >	Arm extend, bucket
					inch	0.24 >	0.79 >	
	2			95±5°C (203±41°F)	mm	6 >	20 >	
					inch	0.24 >	0.79 >	
	3		Arm	50±5°C (122±41°F)	mm	**20 >**	15 >	height 1m, 10 min.
					inch	**0.79 >**	0.59 >	
	4		Bucket	50±5°C (122±41°F)	mm	25 >		Bucket load=JIS heaped×1.8
					inch	0.98 >		
	5		Dozer	50±5°C (122±41°F)	mm	20		
					inch	0.79		
3	1	Boom cushioning performance		30°C(86°F)	sec	3 >		
	2			50°C(122°F)	sec	0.4 to 1.3		
	3			80°C(176°F)	sec	0.3 <		
Q8		**Lever operating force & stroke**						
1	1	Boom lever operating force		up	kgf	1.7 ± 1.0	1.7 ± 0.5	
					N	16.67 ± 9.81	16.67 ± 4.90	
					lbs	3.7 ± 2.2	3.7 ± 1.1	
	2			down	kgf	1.4 ± 1.0	1.4 ± 0.5	
					N	13.73 ± 9.81	13.73 ± 4.90	
					lbs	3.1 ± 2.2	3.1 ± 1.1	

No		Specificatios Items			Unit	U35S (KTC, KCL) U35-3S (KTA)	KX91-3S (KTC, KCL, KTA)	Remarks
1	3	Arm lever		crowd	kgf	1.7 ± 1.0	1.7 ± 0.5	Extend & crowd
					N	16.67 ± 9.81	16.67 ± 4.90	
					lbs	3.7 ± 2.2	3.7 ± 1.1	
	4			extend	kgf	1.4 ± 1.0	1.4 ± 0.5	
					N	13.73 ± 9.81	13.73 ± 4.90	
					lbs	3.1 ± 2.2	3.1 ± 1.1	
	5	Bucket lever		crowd	kgf	1.2 ± 1.0	1.2 ± 0.5	Dump & crowd
					N	11.77 ± 9.81	11.77 ± 4.90	
					lbs	2.6 ± 2.2	2.6 ± 1.1	
	6			extend	kgf	1.2 ± 1.0	1.2 ± 0.5	
					N	11.77 ± 9.81	11.77 ± 4.90	
					lbs	2.6 ± 2.2	2.6 ± 1.1	
	7	Swivel (Swing) lever		R	kgf	1.2 ± 1.0	1.2 ± 0.5	Left & right
					N	11.77 ± 9.81	11.77 ± 4.90	
					lbs	2.6 ± 2.2	2.6 ± 1.1	
	8			L	kgf	1.2 ± 1.0	1.2 ± 0.5	
					N	11.77 ± 9.81	11.77 ± 4.90	
					lbs	2.6 ± 2.2	2.6 ± 1.1	
	9	Dozer lever		up	kgf	2.0 ± 0.5		Up & down
					N	19.61 ± 4.90		
					lbs	4.4 ± 1.1		
	10			down	kgf	2.0 ± 0.5		
					N	19.61 ± 4.90		
					lbs	4.4 ± 1.1		
	11	Travel lever	L	Forward	kgf	1.8 ± 0.5		
					N	17.65 ± 4.90		
					lbs	4.0 ± 1.1		
	12			Back	kgf	1.8 ± 0.5		
					N	17.65 ± 4.90		
					lbs	4.0 ± 1.1		
	13		R	Forward	kgf	1.8 ± 0.5		
					N	17.65 ± 4.90		
					lbs	4.0 ± 1.1		
	14			Back	kgf	1.8 ± 0.5		
					N	17.65 ± 4.90		
					lbs	4.0 ± 1.1		
	15	Accelerator lever		up	kgf	5.0 ± 1.0		AI-version has accel.
					N	49.03 ± 9.81		
					lbs	11.0 ± 2.2		
	16			down	kgf	**3.5 ± 1.0**		
					N	**34.32 ± 9.81**		
					lbs	**7.7 ± 2.2**		
	17	Swing pedal		R	kgf	5.0 ± 1.0		
					N	49.03 ± 9.81		
					lbs	11.0 ± 2.2		
	18			L	kgf	5.0 ± 1.0		
					N	49.03 ± 9.81		
					lbs	11.0 ± 2.2		

No		Specificatios Items			Unit	U35S (KTC, KCL) U35-3S (KTA)	KX91-3S (KTC, KCL, KTA)	Remarks
1	19	Safety lock lever	R	up	kgf	0.8 ± 0.2		Up & down
					N	7.85 ± 1.96		
					lbs	1.8 ± 0.4		
	20			down	kgf	**0.4 ± 0.2**		
					N	**3.92 ± 1.96**		
					lbs	**0.9 ± 0.4**		
	21		L	up	kgf	2.7 ± 1.0		Up & down
					N	26 ± 10		
					lbs	19.5 ± 7.4		
	22			down	kgf	6.0 ± 1.0	5.0 ± 1.0	
					N	49 ± 10	49.03 ± 9.81	
					lbs	43.4 ± 7.4	11.0 ± 2.2	
	23	Travel Hi-Lo change			kgf	1.5 ± 0.5	3.1 ± 1.0	
					N	39 ± 10	30.40 ± 9.81	
					lbs	10.8 ± 3.6	6.8 ± 2.2	
2	1	Boom lever stroke		up	mm	110 ± 10		
					inch	4.33 ± 0.39		
	2			down	mm	110 ± 10		
					inch	4.33 ± 0.39		
	3	Arm lever stroke		crowd	mm	110 ± 10		
					inch	4.33 ± 0.39		
	4			extend	mm	110 ± 10		
					inch	4.33 ± 0.39		
	5	Bucket lever stroke		crowd	mm	85 ± 10		
					inch	3.35 ± 0.39		
	6	Bucket lever stroke		extend	mm	85 ± 10		
					inch	3.35 ± 0.39		
	7	Swivel, swing lever stroke		R	mm	85 ± 10		
					inch	3.35 ± 0.39		
	8			L	mm	85 ± 10		
					inch	3.35 ± 0.39		
	9	Dozer lever stroke		up	mm	55 ± 10		
					inch	55.00 ± 0.39		
	10			down	mm	55 ± 10		
					inch	2.17 ± 0.39		
	11	Travel lever stroke	L	Forward	mm	73 ± 10	75 ± 10	
					inch	2.87 ± 0.39	2.95 ± 0.39	
	12			Back	mm	73 ± 10	75 ± 10	
					inch	2.87 ± 0.39	2.95 ± 0.39	
	13		R	Forward	mm	73 ± 10	75 ± 10	
					inch	2.87 ± 0.39	2.95 ± 0.39	
	14			Back	mm	73 ± 10	75 ± 10	
					inch	2.87 ± 0.39	2.95 ± 0.39	
	15	Accel. Lever			mm	55 ± 10	65 ± 10	
					inch	2.17 ± 0.39	2.56 ± 0.39	

No		Specificatios Items			Unit	U35S (KTC, KCL) U35-3S (KTA)	KX91-3S (KTC, KCL, KTA)	Remarks
Q9		**Stability**						
1	1	Standard arm, Dynamic operation load limit	Bucket load to 10 degrees tipping	Side, dozer up	kgf	-		Arm extend, bucketcrowd oil temp.50±5°C (122±41°F)
					N	-		
					lbs	-		
	2			Front, dozer up	kgf	-		
					N	-		
					lbs	-		
	3		Bucket load to tip fully	Side, dozer up	kgf	-	276	
					N	-	2706.64	
					lbs	-	608.5	
	4			Front, dozer up	kgf	-	294	
					N	-	2883.16	
					lbs	-	648.2	
	5	Standard arm, static limited load	Bucket load to tip fully	Side	kgf	430	393	
					N	4216.86	3854.01	
					lbs	948.0	866.4	
	6			Front	kgf	450	428	
					N	4412.99	4197.25	
					lbs	992.1	943.6	
Q10		**Comfortability**						
1	1	Noise level	At operator's ear LPA	Canopy	db(A)	**81 >**	80 >	
	2			Cab	db(A)	**81 >**		Cab door close
	3		Noise source;LWA	7m	db(A)			
	4				db(A)	95 >		

KX121-3S, 161-3S : KTC, KCL, KTA Version
Machine specification : Service port, TPSS, Arm rest, Long arm, 4 POSTcanopy, KTC-bucket

No		Specificatios Items			Unit	KX121-3S	KX161-3S	Remarks
Q1		**Main Speed JIS A8404**						
1	1	Machine size	Total length (Transport)		mm	5090 ± 102	5540 ± 111	
					inch	200.4 ± 4.0	218.1 ± 4.4	
	2		Total width		mm	1700 ± 17	1960 ± 20	
					inch	66.9 ± 0.7	77.2 ± 0.8	
	3		Total height (Canopy)		mm	2495 ± 25		
					inch	98.2 ± 1.0		
	4		Total height (Cabin)		mm	2480 ± 25	2540 ± 25	
					inch	97.6 ± 1.0	100.0 ± 1.0	
2	1	Weight	Machine weight (Canopy)		kg	4030 ± 81	5065 ± 101	Fuel tank
					lbs	8884.5 ± 178.6	11166.3 ± 222.7	
	2		Machine weight (Cabin)		kg	4095 ± 82	5140 ± 103	
					lbs	9027.8 ± 180.8	11331.6 ± 227.1	
3	1	Performance	Swivel speed	L	rpm	9.2 ± 0.9	9.3 ± 0.9	
	2			R	rpm	9.2 ± 0.9	9.3 ± 0.9	
	3		Travel speed	Lubber F1	km/h	3.0 ± 0.3	**2.5 ± 0.2**	
					mph	1.86 ± 0.19	**1.55 ± 0.12**	
	4			Lubber F2	km/h	5.0 ± 5	**4.6 ± 0.5**	
					mph	3.11 ± 3.11	**2.86 ± 0.31**	
	5			Iron F1	km/h	2.9 ± 0.3	**2.3 ± 0.2**	
					mph	1.80 ± 0.19	**1.43 ± 0.12**	
	6			Iron F2	km/h	4.7 ± 0.5	**4.2 ± 0.4**	
					mph	2.92 ± 0.31	**2.61 ± 0.25**	
	7		Gradeability		deg	30	30	
4	1	Rear end min. turning radius			mm	1300 ± 26	1090 ± 22	
					inch	51.2 ± 1.0	42.9 ± 0.9	
	2	Swivel frame rear ground clearance			mm	574 ± 11	620 ± 12	
					inch	22.6 ± 0.4	24.4 ± 0.5	
	3	Tambler center distance			mm	1710 ± 51	1990 ± 60	
					inch	67.3 ± 2.0	78.3 ± 2.4	
	4	Crawler total length			mm	2175 ± 65	2500 ± 75	
					inch	85.6 ± 2.6	98.4 ± 3.0	
	5	Crawler total width			mm	1700 ± 34	1960 ± 39	
					inch	66.9 ± 1.3	77.2 ± 1.5	
	6	Min. ground clearance			mm	330 ± 10	320 ± 10	
					inch	13.0 ± 0.4	12.6 ± 0.4	
5	1	Front attach-ment	Bucket heaped capacity	CECE	m3			
					yd3			
	2			SAE, JIS	m3	0.12	0.14	
					yd3	0.16	0.18	
	3		Bucket width		mm	600 ± 12		Without side cut-ter
					inch	23.6 ± 0.5		
	4		Swing angle	Canopy L	deg	75 ± 2		
	5			Canopy R	deg	48 ± 2		
	6			Cabin L	deg	75 ± 2		
	7			Cabin R	deg	48 ± 2		
	8		Max. digging radius		mm	5600 ± 16	6260 ± 94	
					inch	220.5 ± 0.6	246.5 ± 3.7	

No		Specificatios Items			Unit	KX121-3S	KX161-3S	Remarks
5	9	Front attach-ment	Ground level Max. digging radius		mm	5475 ± 82	6130 ± 92	
					inch	215.6 ± 3.2	241.3 ± 3.6	
	10		Ground level Min. finish radius		mm	1805 ± 36	1940 ± 39	Bucket bottom horizontal
					inch	71.1 ± 1.4	76.4 ± 1.5	
	11		Max. digging depth		mm	3505 ± 70	3830 ± 77	
					inch	138.0 ± 2.8	150.8 ± 3.0	
	12		Max. vertical digging depth		mm	2480 ± 74	2585 ± 78	
					inch	97.6 ± 2.9	101.8 ± 3.1	
	13		Max. digging height	Conopy	mm	5420 ± 108	5715 ± 14	
					inch	213.4 ± 4.3	225.0 ± 0.6	
	14			Cabin	mm	5420 ± 108	5715 ± 14	
					inch	213.4 ± 4.3	225.0 ± 0.6	
	15		Max. dump height	Conopy	mm	3890 ± 78	4155 ± 83	
					inch	153.1 ± 3.1	163.6 ± 3.3	
	16			Cabin	mm	3890 ± 78	4155 ± 83	
					inch	153.1 ± 3.1	163.6 ± 3.3	
	17		Max. dump height (Arm vertical)	Conopy	mm	1250 ± 37	1285 ± 39	
					inch	49.2 ± 1.5	50.6 ± 1.5	
	18			Cabin	mm	1250 ± 37	1285 ± 39	
					inch	49.2 ± 1.5	50.6 ± 1.5	
	19	Front attach-ment	Mini. turning radius	Conopy	mm	2060 ± 62	2420 ± 73	
					inch	81.1 ± 2.4	95.3 ± 2.9	
	20			Cabin	mm	2060 ± 62	2420 ± 73	
					inch	81.1 ± 2.4	95.3 ± 2.9	
	21		Mini. turning radius (Left swing)	Conopy	mm	1665 ± 50	1955 ± 59	
					inch	65.6 ± 2.0	77.0 ± 2.3	
	22			Cabin	mm	1665 ± 50	1995 ± 59	
					inch	65.6 ± 2.0	78.5 ± 2.3	
6	1	Dozer	Width		mm	1700 ± 5	1960 ± 5	
					inch	66.9 ± 0.2	77.2 ± 0.2	
	2		Height		mm	350 ± 20	360 ± 10	
					inch	13.8 ± 0.8	14.2 ± 0.4	
	3		Max. lift above GL		mm	395 ± 50	455 ± 50	
					inch	15.6 ± 2.0	17.9 ± 2.0	
	4		Max. below GL		mm	410 ± 50	370 ± 50	
					inch	16.1 ± 2.0	14.6 ± 2.0	
Q2		**Main Specs JIS A8404**						
1	1	Bucket tooth slaggish			mm	50		
					inch	1.97		
	2				mm	0		
					inch	0		
	3	Dozer's declination			mm	3		
					inch	0.12		
2	1	Eccentric amount from swing center			mm	195	170	From swivel cen-ter
					inch	7.68	6.69	
	2	Distance to swing center			mm			
					inch			
3	1	Approach angle			deg	30 ± 3		
4	1	Crawler height			mm	470 ± 9	520 ± 10	Include grouser on the spocket
					inch	18.50 ± 0.35	20.47 ± 0.39	
	2	Max. crawler height			mm	490 ± 10	550 ± 11	
					inch	19.29 ± 0.39	21.65 ± 0.43	

No		Specificatios Items		Unit	KX121-3S	KX161-3S	Remarks
Q3		**Engine performance**					
1	1	Max, engine rpm	no load	rpm	2450 ≤	**2400 ≤**	
	2		1 pump relief	rpm	-	-	
	3		2 pump relief	rpm	-	-	
	4		3 pump relief	rpm	-	-	Boom, arm, swivel
	5		2 pump relief	rpm	2250 , 2150≤	**2200 , 2100≤**	
	6		Dozer+2 pump relief	rpm	2250	**2200 , 2100≤**	
2	1	Idler		rpm	1100 +50, -150	**1200 +50, -150**	
Q4		Travelling performance					
1	1	Travel motor block perfor-mance	L	mm	272 , 300≥	261 , 300≥	20 deg, 10 min
				inch	10.71 , 11.8≥	10.28 , 11.8≥	
	2	Travel motor block perfor-mance	Rubber	mm	272 , 300≥	261 , 300≥	
				inch	10.71 11.8≥	10.28 , 11.8≥	
2	1	Max, Traction force	F1	kgf	3081	4083	On the center
				kN	30.2	40.0	
				lbs	6792	9001	
	2		F2	kgf	1455	1972	
				kN	14.3	19.3	
				lbs	3208	4348	
3	1	Travel straight-ness	F1	mm	600		10m distance
				inch	23.62		
	2		F2	mm	600		
				inch	23.62		
	3		Dozer F1	mm	600		Dozer up & down 10m dis-tance
				inch	23.62		
	4		Dozer R1	mm	600		
				inch	23.62		
4	1	Track shoe sag distance	Iron	mm	40 ± 5		
				inch	1.57 ± 0.20		
	2		Rubber	mm	10 ± 5		
				inch	0.39 ± 0.20		
Q5		**Work performance**					
1	1	Boom lifting capacity		kgf	734	790	Front end, Arm extend bucket crowd, at tooth
				kN	7.2	7.7	
				lbw	1618	1742	
	2	Arm digging force		kgf	1790	2253	Bucket tooth root
				kN	17.6	22.1	
				lbw	3946	4967	
	3	Bucket digging force		kgf	3005	5043	Machine stance to JIS bucket tooth root
				kN	29.5	49.5	
				lbw	6625	11118	
	4	Dozer force	down	kgf	3160	4170	Cutting edge down force at ground level
				kN	31.0	40.9	
				lbw	6967	9193	

No		Specificatios Items			Unit	KX121-3S	KX161-3S	Remarks
2	1	Boom speed	Canopy	up (G→T)	sec	**2.7 ± 0.3**		Oil temp. 50±5°C(122±41°F) Ground to max. height (excu-lude cushioning)
	2			up (L→T)	sec	4.9 ± 0.3	**4.7 ± 0.3**	
	3			down(T→G)	sec	**2.7 ± 0.3**		
	4			down	sec	5.1 ± 0.3	**4.6 ± 0.3**	
	5		Cabine	up 1st	sec	**2.7 ± 0.3**		
	6			up 2nd	sec	4.9 ± 0.3	**4.7 ± 0.3**	
	7			down	sec	**2.7 ± 0.3**		
	8			down	sec	5.1 ± 0.3	**4.6 ± 0.3**	
3	1	Arm speed		crowd	sec	3.2 ± 0.3	3.1 ± 0.3	
	2			extend	sec	2.8 ± 0.3	**3.1 ± 0.3**	
4	1	Bucket speed		crowd	sec	2.7 ± 0.3	**2.9 ± 0.3**	Oil temp. 50±5°C(122±41°F)
	2			dump	sec	2.2 ± 0.3	2 ± 0.3	
5	1	Dozer speed		up (G→T)	sec	1.2 ± 0.3	1.5 ± 0.3	Max. down to max. up
	2			up (L→T)	sec	**2.3 ± 0.3**	**2.5 ± 0.3**	Max. up to max. down
	3			down(T→G)	sec	1.4 ± 0.3	**1.9 ± 0.3**	
	4			down (T→L)	sec	**3.0 ± 0.3**	**3.8 ± 0.3**	
6	1	Arm cylinder cavitation			mm	0, 5 ≥	0, 0.5 ≥	Oil temp. 95±5°C(203±41°F)
					inch	0	0	
7	1	Max. digging height radius	Canopy		mm	2825 ± 282	3640 ± 364	
					inch	111.22 ± 11.10	143.31 ± 14.33	
	2		Cabine		mm	2825 ± 282	3640 ± 364	
					inch	111.22 ± 11.10	143.31 ± 14.33	
	3	Max. dump height radius	Canopy		mm	2790 ± 167	**3325**	at bucket pin
					inch	109.84 ± 6.57	**130.91**	
	4		Cabine		mm	2790 ± 167	**3325**	
					inch	109.84 ± 6.57	**130.91**	
	5	Bucket bottom height at arm vertical	Canopy		mm	1585 ± 415	1600	Bucket horizon-tal
					inch	62.40 ± 16.34	62.99	
	6		Cabine		mm	1585 ± 415	1600	
					inch	62.40 ± 16.34	62.99	
	7	Bucket wrist angle			degree	197 ± 3	168.5 ± 3	
Q6		**Swivel, swing performance**						
1	1	Swivel torque		L	kgf·m	840	1265	Arm extend,show/ Quick
					kN.m	8.2	12.4	
					ft·lbs	6075	9149	
	2			R	kgf·m	840	1265	
					kN.m	8.2	12.4	
					ft·lbs	6075	9149	
2	1	Swivel angle		L	deg	20	17	Bucket load=JIS heaped×1.8
	2			R	deg	20	17	
3	1	Swivel block performance		L	deg	0	**5 >**	
	2			R	deg	0	**5 >**	
	3			L	deg	30	30 >	
	4			R	deg	30	30 >	
4	1	Swivel start-up speed		L	sec	2.1 ± 0.3	2.5 ± 0.3	0~90 deg swivel
	2			R	sec	2.1 ± 0.3	2.5 ± 0.3	

No		Specificatios Items			Unit	KX121-3S	KX161-3S	Remarks
5	1	Swing speed	Canopy	L	sec	**6.7 ± 0.7**	6.7 ± 0.5	
	2			R	sec	**6.5 ± 0.7**	7.7 ± 0.5	
	3		Cabine	L	sec	**6.7 ± 0.7**	6.7 ± 0.5	
	4			R	sec	**6.5 ± 0.7**	7.7 ± 0.5	
6	1	Swing Lock		Swivel R&L	mm	2	2, 10 >	90 deg-swivel, 100 times actual digging cylinder dislocation
					inch	0.08		
	2	Reciprocating motion	L / R	Swing	mm			90 deg-swivel, 100 times
					inch			
Q7		**Hydraulic performance**						
1	1	Relief pressure setting		P1	kgf/cm2	250 +10, -5	**245 +10, -5**	At pump deliv-ery 50±5°C
					MPa	24.5 +1.0, -0.5	**24.0 +1.0, -0.5**	
					bar	24.5 +10, -5	**24.5 +10, -5**	
					psi	3556 +140, -70	**3485 +140, -70**	
	2			P2	kgf/cm2	-		
					MPa	-		
					bar	-		
					psi	-		
	3			P3	kgf/cm2	-		
					MPa	-		
					bar	-		
					psi	-		
	4			P4	kgf/cm2	40 ± 5.1		
					MPa	3.9 ± 5.0		
					bar	3.9 ± 5.0		
					psi	569 ± 73		
2	1	Cylinder oil sealing capacity	Boom	50±5°C (122±41°F)	mm	20		Arm extend, bucket
					inch	0.79		
	2			95±5°C (203±41°F)	mm	20		
					inch	0.79		
	3		Arm	50±5°C (122±41°F)	mm	20		height 1m, 10 min.
					inch	0.79		
	4		Bucket	50±5°C (122±41°F)	mm	10		Bucket load=JIS heaped×1.8
					inch	0.39		
	5		Dozer	50±5°C (122±41°F)	mm	20	3	
					inch	0.79	0.12	
3	1	Boom cushioning performance		30°C(86°F)	sec	3		
	2			50°C(122°F)	sec	0.4 to 1.3		
	3			80°C(176°F)	sec	0.3		
Q8		**Lever operating force & stroke**						
1	1	Boom lever operating force		up	kgf	**1.8 ± 0.5**		
					N	**17.65 ± 4.90**		
					lbs	**4.0 ± 1.1**		
	2			down	kgf	1.5 ± 0.5		
					N	14.71 ± 4.90		
					lbs	3.3 ± 1.1		
	3	Arm lever		crowd	kgf	**1.8 ± 0.5**		Extend & crowd
					N	**17.65 ± 4.90**		
					lbs	**4.0 ± 1.1**		
	4			extend	kgf	1.5 ± 0.5		
					N	14.71 ± 4.90		
					lbs	3.3 ± 1.1		

No		Specificatios Items			Unit	KX121-3S	KX161-3S	Remarks
1	5	Bucket lever		crowd	kgf	1.5 ± 0.5		Dump & crowd
					N	14.71 ± 4.90		
					lbs	3.3 ± 1.1		
	6			extend	kgf	**1.8 ± 0.5**		
					N	**17.65 ± 4.90**		
					lbs	**4.0 ± 1.1**		
	7	Swivel (Swing) lever		R	kgf	1.5 ± 0.5		Left & right
					N	14.71 ± 4.90		
					lbs	3.3 ± 1.1		
	8			L	kgf	1.5 ± 0.5		
					N	14.71 ± 4.90		
					lbs	3.3 ± 1.1		
	9	Dozer lever		up	kgf	**1.0 ± 0.5**	2.4 ± 0.5	Up & down
					N	**9.81 ± 4.90**	23.54 ± 4.90	
					lbs	**2.2 ± 1.1**	5.3 ± 1.1	
	10			down	kgf	**1.5 ± 0.5**	2.4 ± 0.5	
					N	**14.71 ± 4.90**	23.54 ± 4.90	
					lbs	**3.3 ± 1.1**	5.3 ± 1.1	
	11	Travel lever	L	Forward	kgf	**1.2 ± 0.5**	1.5 ± 0.5	
					N	**11.77 ± 4.90**	14.71 ± 4.90	
					lbs	**2.6 ± 1.1**	3.3 ± 1.1	
	12			Back	kgf	**1.2 ± 0.5**	1.5 ± 0.5	
					N	**11.77 ± 4.90**	14.71 ± 4.90	
					lbs	**2.6 ± 1.1**	3.3 ± 1.1	
	13		R	Forward	kgf	**1.2 ± 0.5**	1.5 ± 0.5	
					N	**11.77 ± 4.90**	14.71 ± 4.90	
					lbs	**2.6 ± 1.1**	3.3 ± 1.1	
	14			Back	kgf	**1.2 ± 0.5**	1.5 ± 0.5	
					N	**11.77 ± 4.90**	14.71 ± 4.90	
					lbs	**2.6 ± 1.1**	3.3 ± 1.1	
	15	Accelerator lever		up	kgf	5 ± 1.0	±	AI-version has accel dial not a lever.
					N	49.03 ± 9.81	-	
					lbs	11.0 ± 2.2	-	
	16			down	kgf	3.5 ± 1.0	-	
					N	34.32 ± 9.81	-	
					lbs	7.7 ± 2.2	-	
	17	Swing pedal		R	kgf	**3.4 ± 1.0**		
					N	**33.34 ± 9.81**		
					lbs	**7.5 ± 2.2**		
	18			L	kgf	**4.1 ± 1.0**		
					N	**40.21 ± 9.81**		
					lbs	9.0 ± 2.2		

No		Specificatios Items			Unit	KX121-3S	KX161-3S	Remarks
1	19	Safety lock lever	R	up	kgf	0.8 ± 0.2		Up & down
					N	7.85 ± 1.96		
					lbs	1.8 ± 0.4		
	20			down	kgf	0.4 ± 0.2		
					N	3.92 ± 1.96		
					lbs	0.9 ± 0.4		
	21		L	up	kgf	2.7 ± 1.0		Up & down
					N	26.48 ± 9.81		
					lbs	6.0 ± 2.2		
	22			down	kgf	**4.5 ± 1.0**		
					N	**44.13 ± 9.81**		
					lbs	**9.9 ± 2.2**		
	23	Travel Hi-Lo change			kgf	4.0 ± 1.0	3.5 ± 1.0	Super servier have a switch
					N	39.23 ± 9.81	34.32 ± 9.81	
					lbs	8.8 ± 2.2	7.7 ± 2.2	
2	1	Boom lever stroke		up	mm	**72 ± 10**		
					inch	**2.83 ± 0.39**		
	2			down	mm	**72 ± 10**		
					inch	**2.83 ± 0.39**		
	3	Arm lever stroke		crowd	mm	**72 ± 10**		
					inch	**2.83 ± 0.39**		
	4			extend	mm	**72 ± 10**		
					inch	**2.83 ± 0.39**		
	5	Bucket lever stroke		crowd	mm	**72 ± 10**		
					inch	**2.83 ± 0.39**		
	6	Bucket lever stroke		extend	mm	95 ± 10		
					inch	3.74 ± 0.39		
	7	Swivel, swing lever stroke		R	mm	**72 ± 10**		
					inch	**2.83 ± 0.39**		
	8			L	mm	**72 ± 10**		
					inch	**2.83 ± 0.39**		
	9	Dozer lever stroke		up	mm	60 ± 10		
					inch	2.36 ± 0.39		
	10			down	mm	60 ± 10		
					inch	2.36 ± 0.39		
	11	Travel lever stroke	L	Forward	mm	**70 ± 10**		
					inch	**2.76 ± 0.39**		
	12			Back	mm	**70 ± 10**		
					inch	**2.76 ± 0.39**		
	13		R	Forward	mm	**70 ± 10**		
					inch	**2.76 ± 0.39**		
	14			Back	mm	**70 ± 10**		
					inch	**2.76 ± 0.39**		

No		Specificatios Items			Unit	KX121-3S	KX161-3S	Remarks
Q9		Stability						
1	1	Standard arm, Dynamic operation load limit	Bucket load to 10 degrees tipping	Side, dozer up	kgf			Arm extend, bucketcrowd oil temp. 50±5°C (122±41°F)
					N			
					lbs			
	2			Front, dozer up	kgf			
					N			
					lbs			
	3		Bucket load to tip fully	Side, dozer up	kgf			
					N			
					lbs			
	4			Front, dozer up	kgf			
					N			
					lbs			
	5	Standard arm, static limited load	Bucket load to tip fully	Side	kgf			
					N			
					lbs			
	6			Front	kgf			
					N			
					lbs			
2	1	Standard arm, Dynamic operation load limit	Bucket load to 10 degrees tipping	Side, dozer up	kgf			Arm extend, bucketcrowd oil temp. 50±5°C (122±41°F)
					N			
					lbs			
	2			Front, dozer up	kgf			
					N			
					lbs			
	3		Bucket load to tip fully	Side, dozer up	kgf			
					N			
					lbs			
	4			Front, dozer up	kgf			
					N			
					lbs			
	5	Standard arm, static limited load	Bucket load to tip fully	Side	kgf			
					N			
					lbs			
	6			Front	kgf			
					N			
					lbs			
Q10		**Comfortability**						
1	1	Noise level	At operator's ear LPA	Canopy	db(A)			
	2			Cab	db(A)			Cab door close
	3		Noise source;LWA	7m	db(A)			
	4				db(A)			

B. Finger control service port system

a. Feature and purpose

1 The service port pedal has been replaced by a lever-top knob switch: Feather-touch finger control realized.
2 The breaker can easily be operated with a button switch.
3 Optimum control feeling adjustments can be made for maneuvering various attachments efficiently.
4 Safe attachment handling is ensured through fool proof control.

Thumb

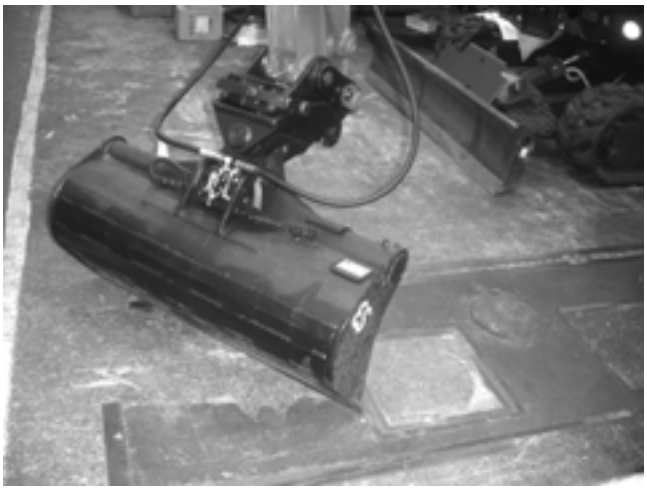

Tilt bucket

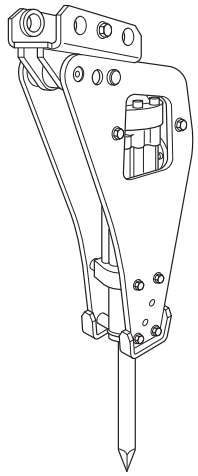

Breaker

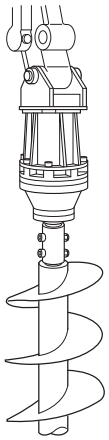

Auger

When a thumb (and tilt bucket) attached, the foot pedal has been used to operate. It has not been easy for fine control in this way. Such operation can now be finely controlled with your hand (thumb) and you can ensure more space around your feet.
Service port functions have been tremendously upgraded.

b. Outline of control system

1. Aux. port finger operation

Fine control by finger operation
① Proportionality operation of AUX. port.
② Full open output hold Switch at the time of breaker operation.
③ Hand operation ON-OFF Switch. (secure safety priority)

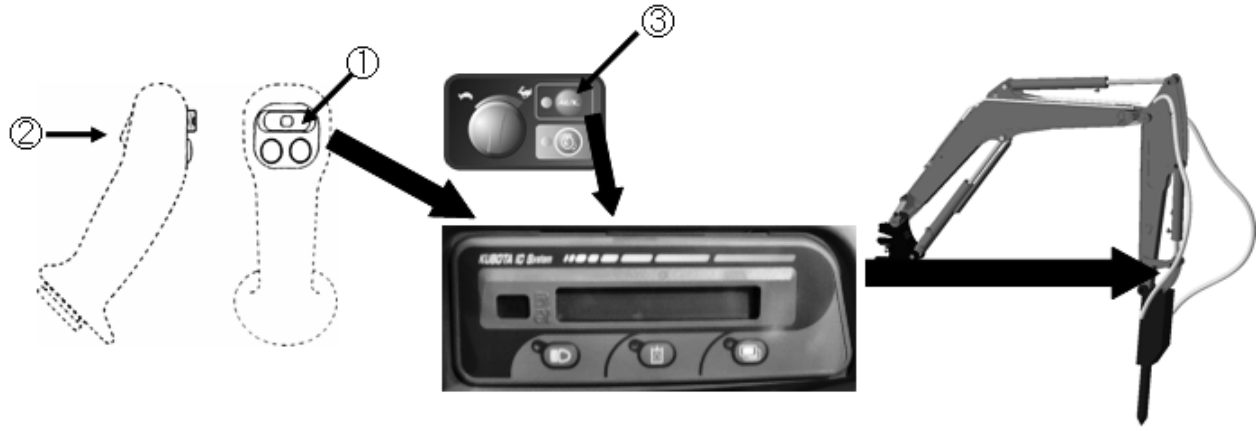

2. Control layout

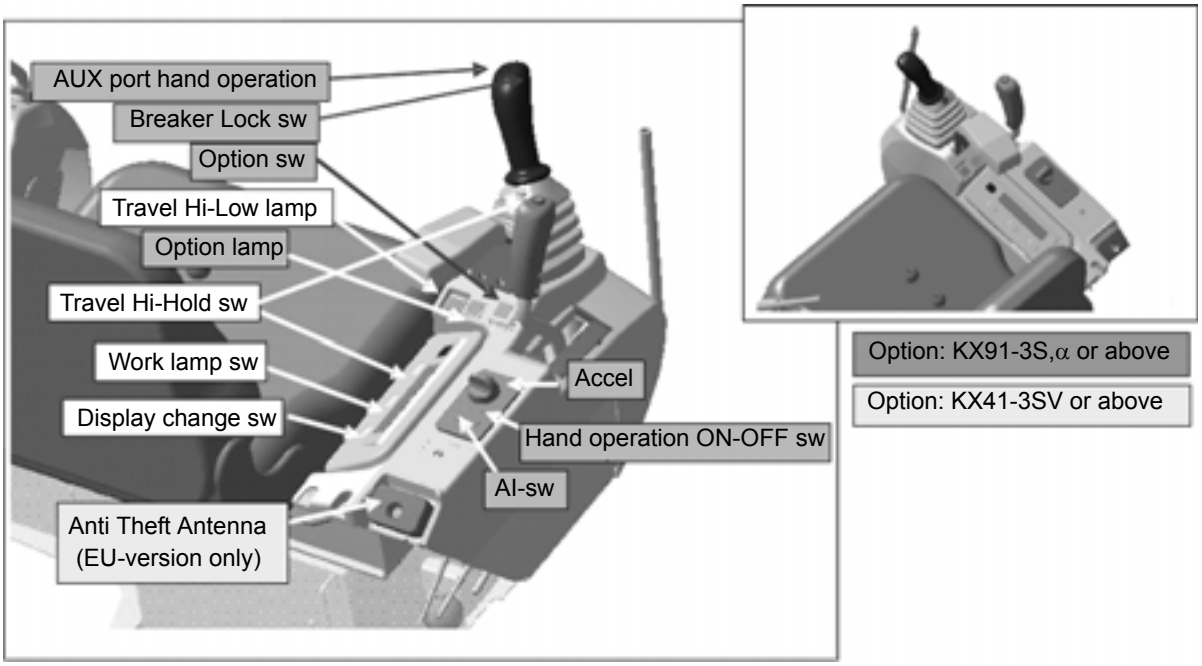

Controller

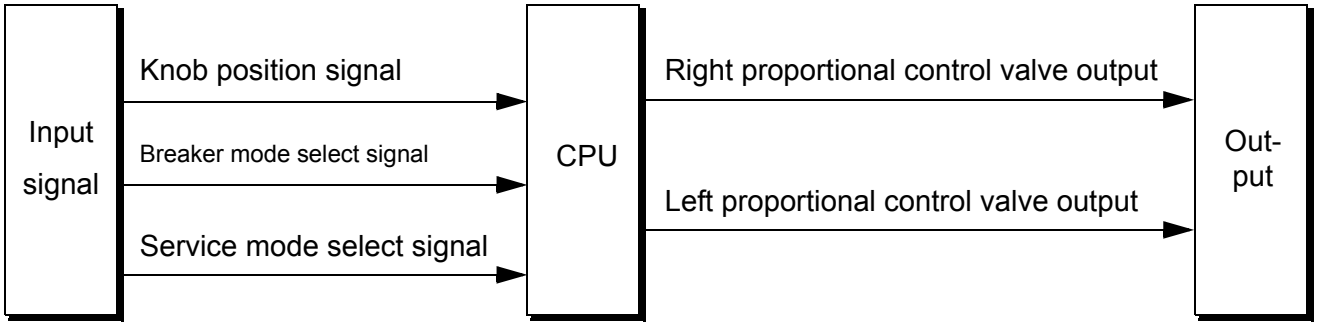

3. Service port system components

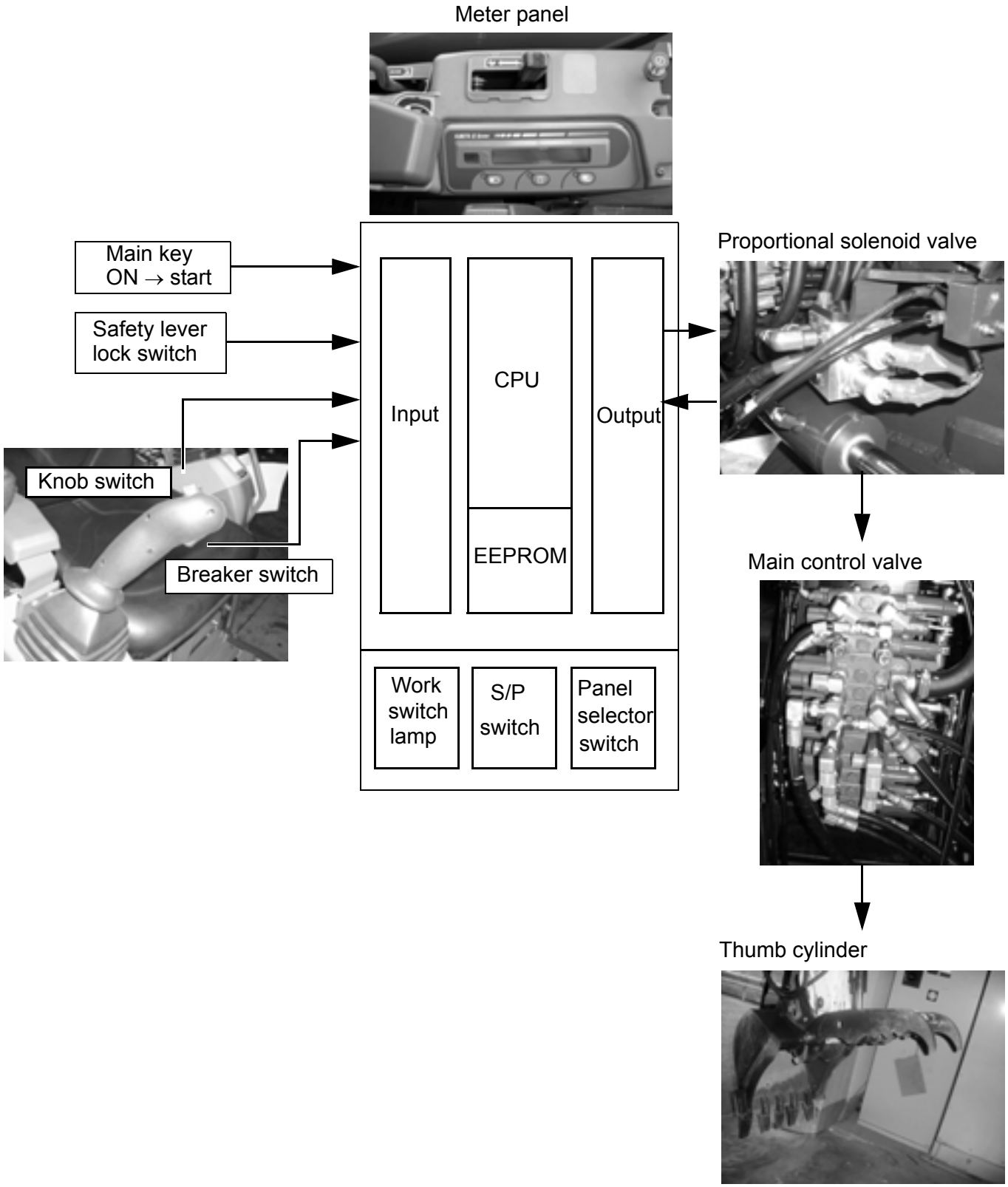

c. Hydraulic circuit diagram

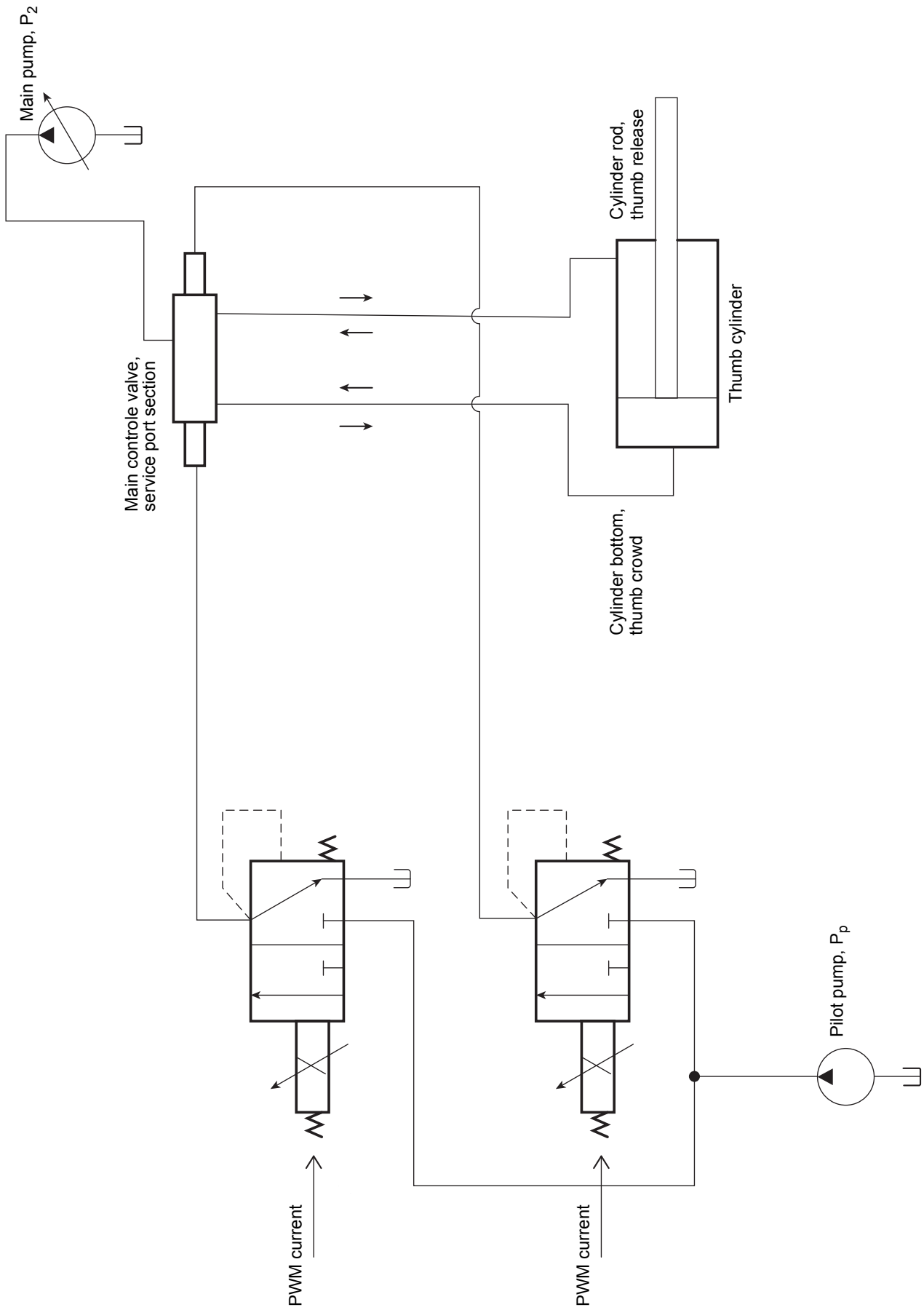

d. Knob structure and function

The knob has a built-in IC chip that is different from that for potentiometers.

1) Service mode:Press the center switch of the meter panel to call the service mode.
2)Knob control: Shift the knob to L or R direction to call two way PTO operation.
3) Breaker operation:Press the back button of the knob to call the breaker mode.

1. Structure of knob switch

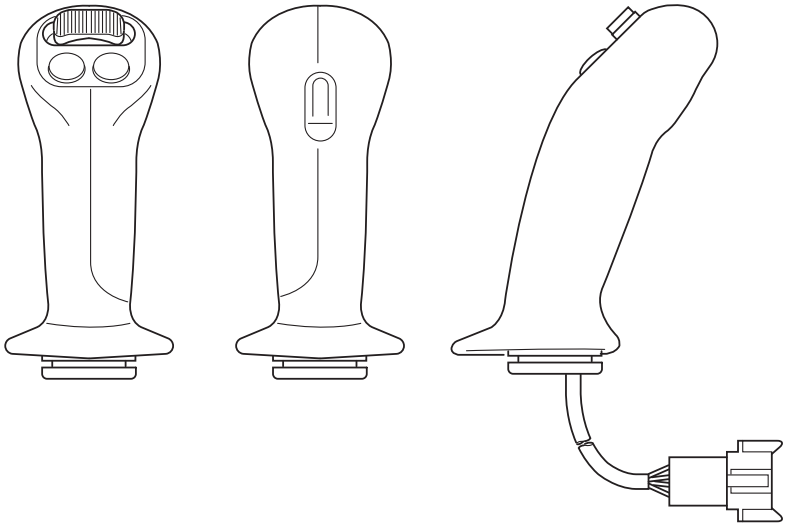

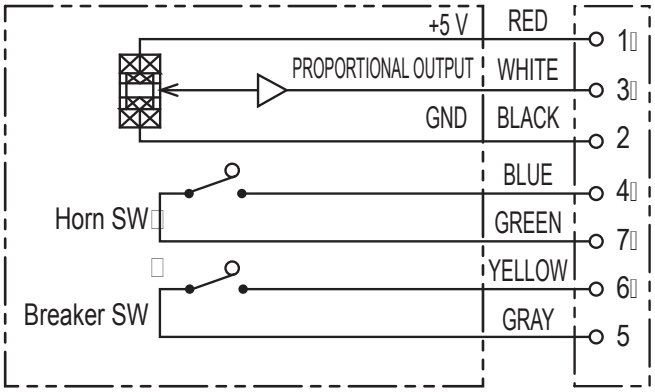

ELECTRIC CIRCUIT

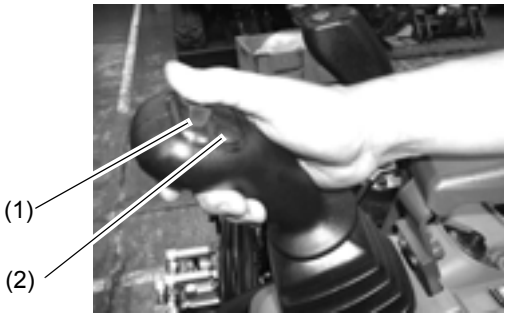

(1) Knob switch (2) Horn switch

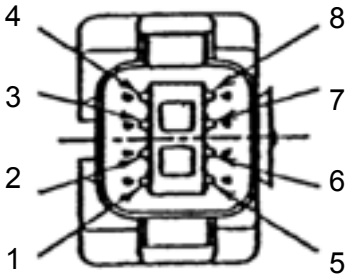

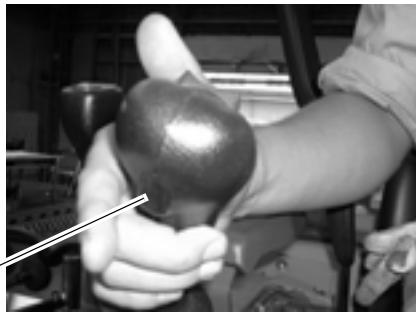

(3) Breaker switch

2. Basic operation of the knob

1) With the key on

When the key is on, the system gets started out of the service mode OFF-position.
In other words, the knob is not operative. (This is for safety.)

2) Service mode

Press the center switch of the meter panel, and the center LED indicator lights up and the system gets in the service mode. Now the knob is operative. Move the knob to the left for the thumb to grasp an object. Move it to the right for the thumb to release it.

3) Breaker mode

The breaker mode is enabled while in the service mode. Press the breaker switch on the back of the knob to activate the breaker. The main pump fully feeds the fluid to the breaker. If the thumb is attached in place, the main pump feeds the full amount of fluid from the service port to the thumb cylinder.

<Breaker switch function>

(1) Push the S/P switch on.
(2) Press the breaker switch.
(3) Breaker starts pounding.
(4) Press the breaker switch again.
(5) Breaker stops.

4) Releasing the breaker

There are three methods to release the breaker operation.
(1) Press the breaker switch again to stop the breaker.
(2) Press the service port switch to off position. (The center LED indication goes off.)
(3) Or, move the knob for over 0.2 second.
(4) Or, lift up the safety lock lever.
(5) Turn the main key to off position.

3. Flow chart; Service port operation

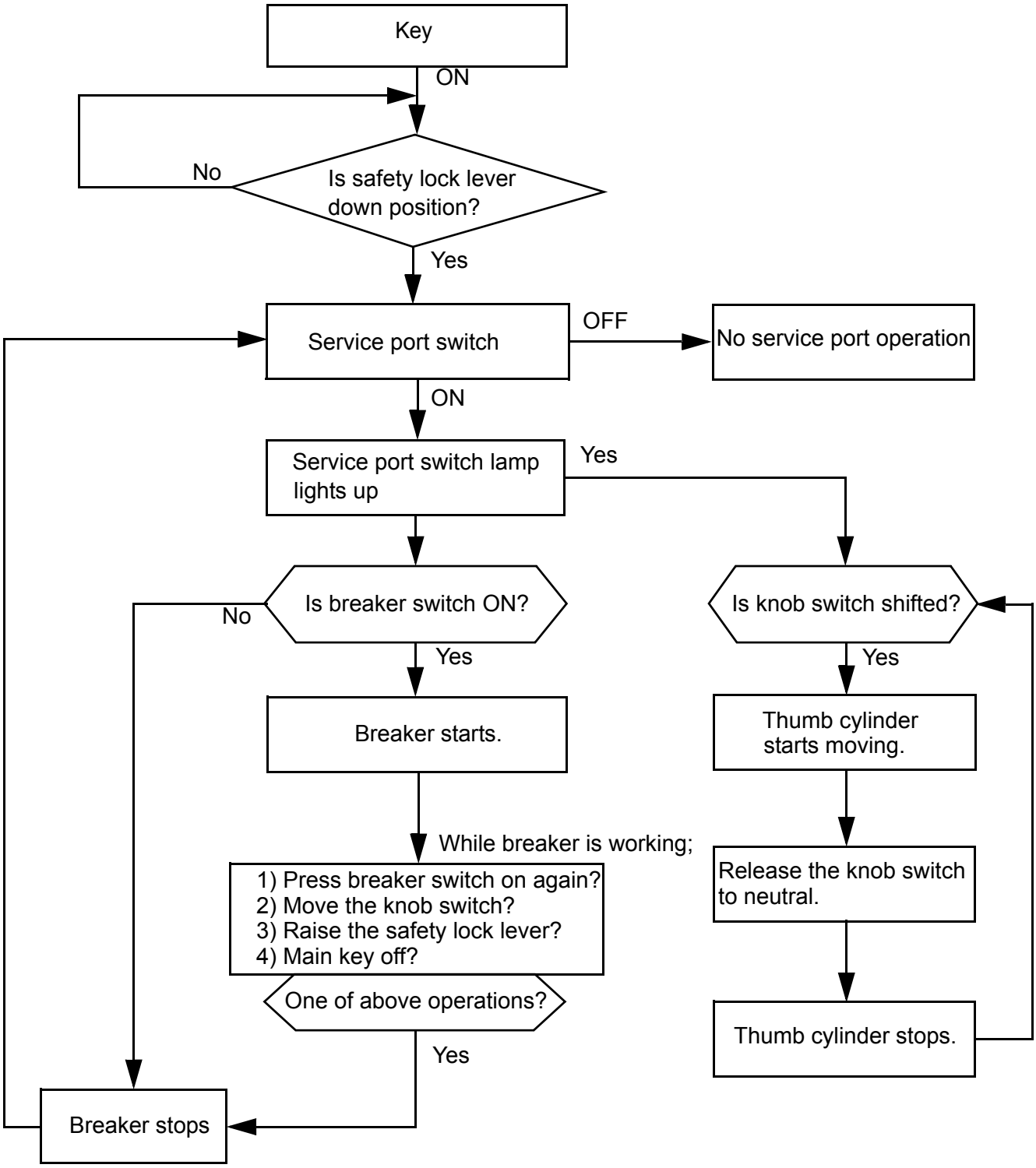

4. S/P switch (service port switch)

<Function chart>

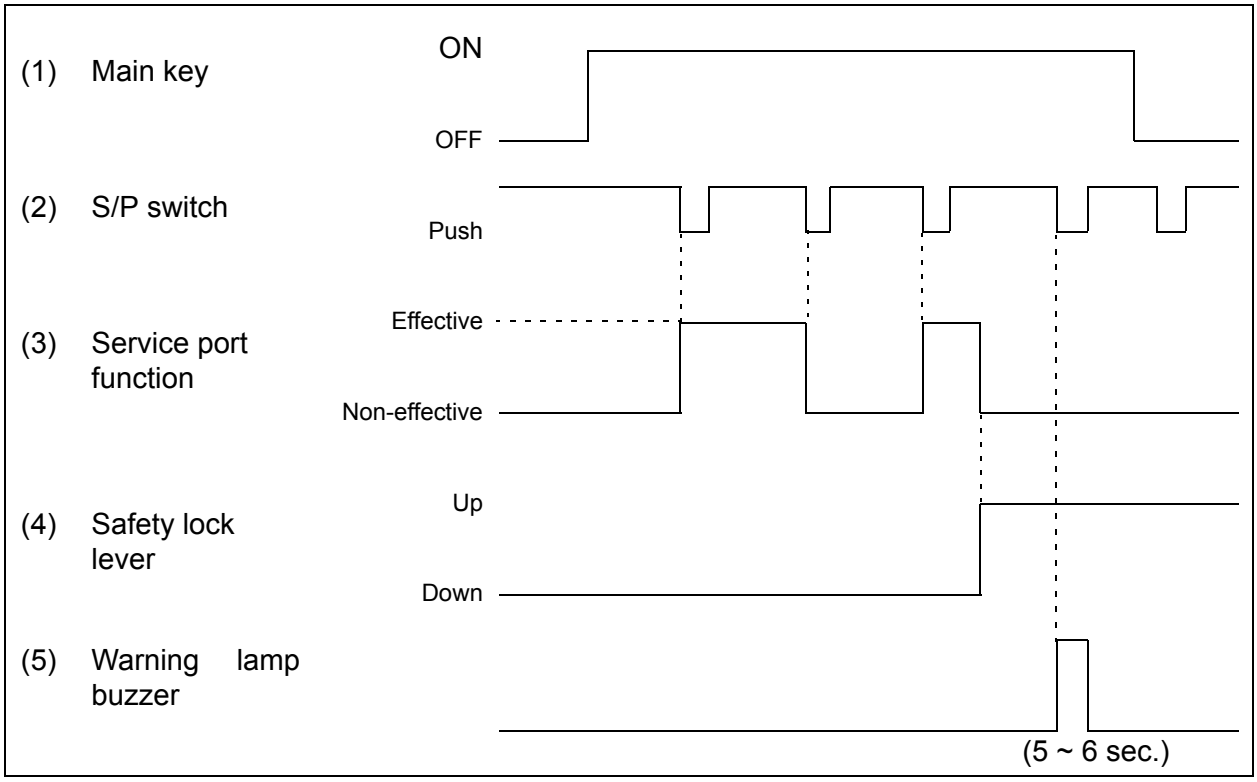

Service port switch (S/P sw) in the middle bottom on the meter panel controls the service port functions, such as thumb switch and breaker switch.

In order to get the service port function, first push this switch and then control the two switches on the knob lever.

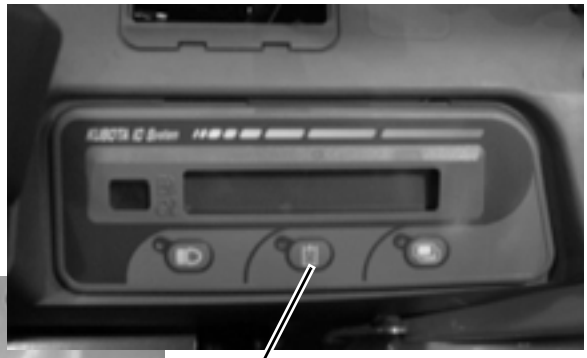

(1) Service port switch

5. How the knob switch works

1) Let's suppose that the breaker has been released. To call the breaker mode again, it is necessary to press the back button (breaker switch) of the knob. (This is for safety.)
2) To release the breaker, just move the knob. This is highly convenient.
3) Let's say that you have forcefully moved the lever to operate the other functions, such as boom up or down or etc. The knob may be momentarily shaken, which may fluctuate the voltage and unnecessarily release the breaker. To avoid this, the knob must be moved for over 0.2 second to release the breaker operation. Just for reference, the knob does not tilt for over 0.2 second under usual lever control conditions.

6. Breaker operation

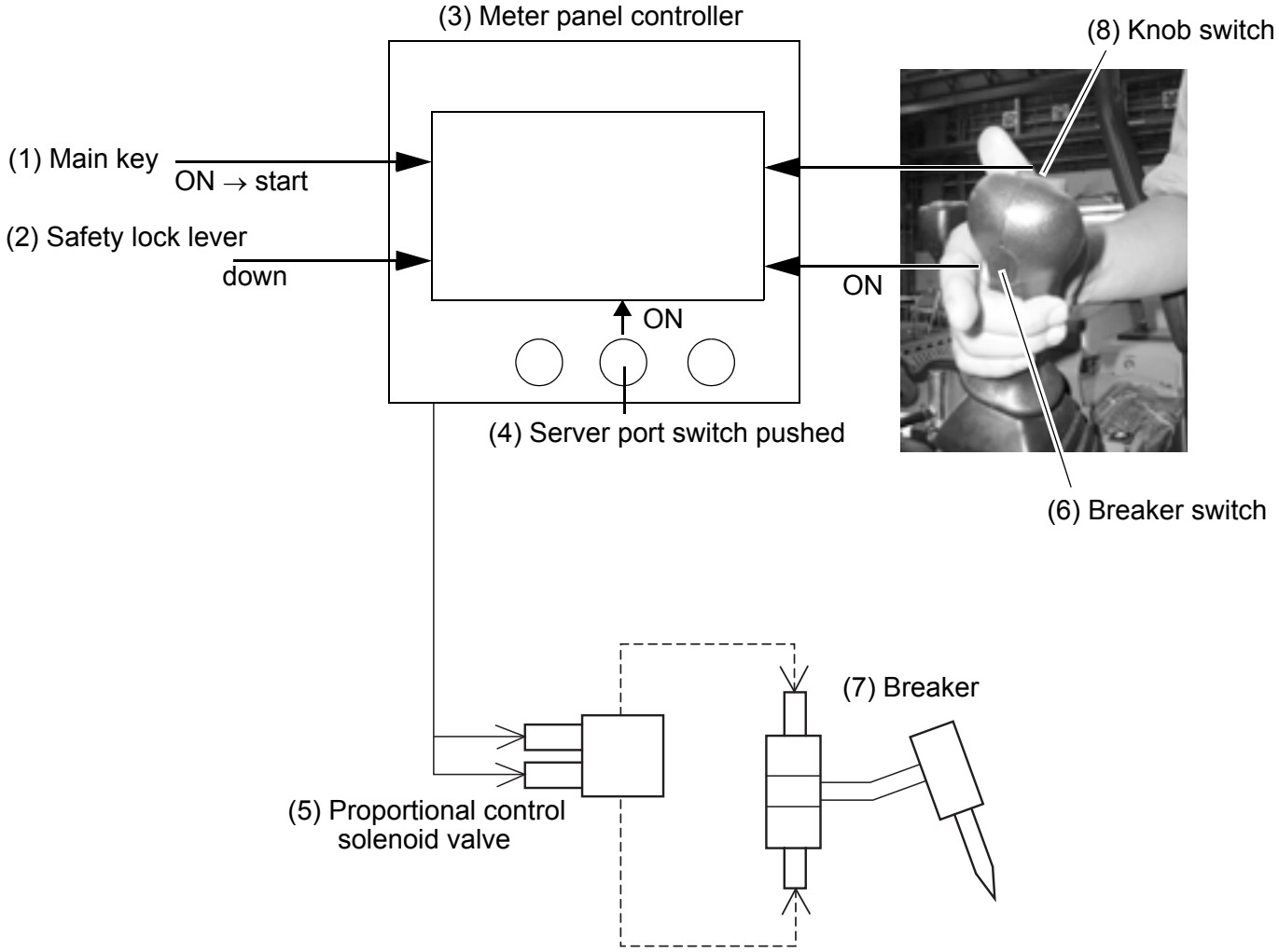

Note: When the safety lock lever is up position, all switches of service port switch, breaker switch and knob switch don't function at all. This is also for safety purpose.
Therefore, once the safety lock lever is shifted up while service port operation, breaker or thumb cylinder stops.
When to start the breaker again, first shift down the safety lock lever, press ON the service port switch and press the breaker switch. Safety lock switch has the priority for the safety.

7. Interrelation among current, pressure and flow

Sample data: Thumb clamp (Bottom side, A port, left)

MIN: 1050 rpm:A

MAX: rpm:A

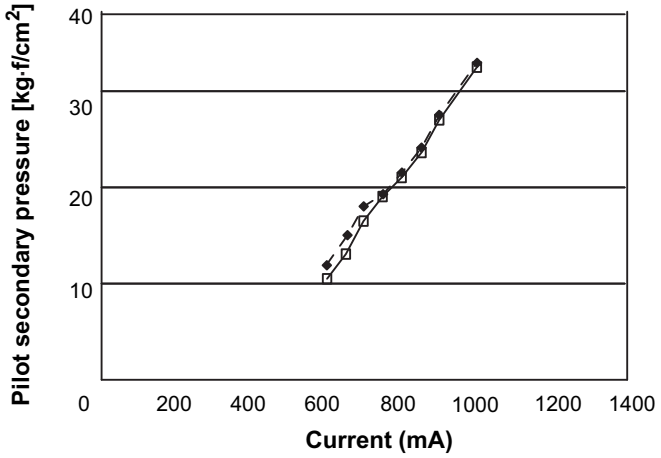

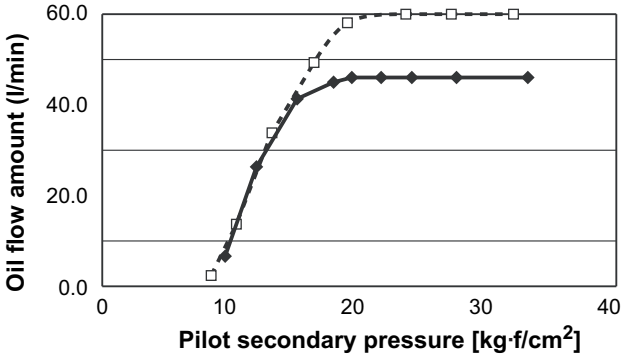

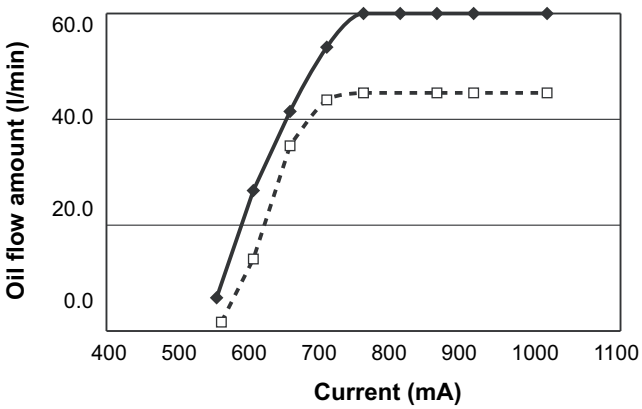

Note: Above charts are just the sample figures to illustrate the interrelation among the three parameters.
1. Current: PWM current provided from the panel controller.
2. Pressure: Secondary pilot pressure delivered from S/P solenoid valve.
3. Flow: Oil flow amount supplied to the thumb cylinder.

e. Initial settings of the knob

1. Set-up and adjustment of service port

This new finger control service port system requires three types of set-up and adjustment procedures.

Items to set-up	When
Knob initial set-up	1. Knob change 2. S/P valve change 3. Meter panel change
S/P valve start-point set-up	1. S/P valve change 2. Main control valve change 3. Pilot pump change 4. Hydraulic actuator change
Manual feeling adjustment	1. Hydraulic actuator change 2. Operator change and feeling change

2. Purpose

Three settings (right and left ends, and neutral) of the knob are kept in the meter controller's memory. Note that there are fluctuations from knob to knob.
The knob has been factory-set at Hirakata Factory or KBM. When the meter, the knob or the proportional control solenoid valve has been replaced, the knob settings must be manually reprogrammed. If not reprogrammed, the thumb may get activated even in neutral or slowly move even at the right end.
The meter memory keeps the following data in the EEPROM addresses
1023 × 8 = 8184 then 5 V.
But actual data varies as follows.

Address 45:	Left end	→	0.4 ~ 0.8 V
Address 46:	Neutral	→	2.4 ~ 2.8 V
Address 47:	Right end	→	4.40 ~ 4.80 V

<Knob shift amount and output voltage>

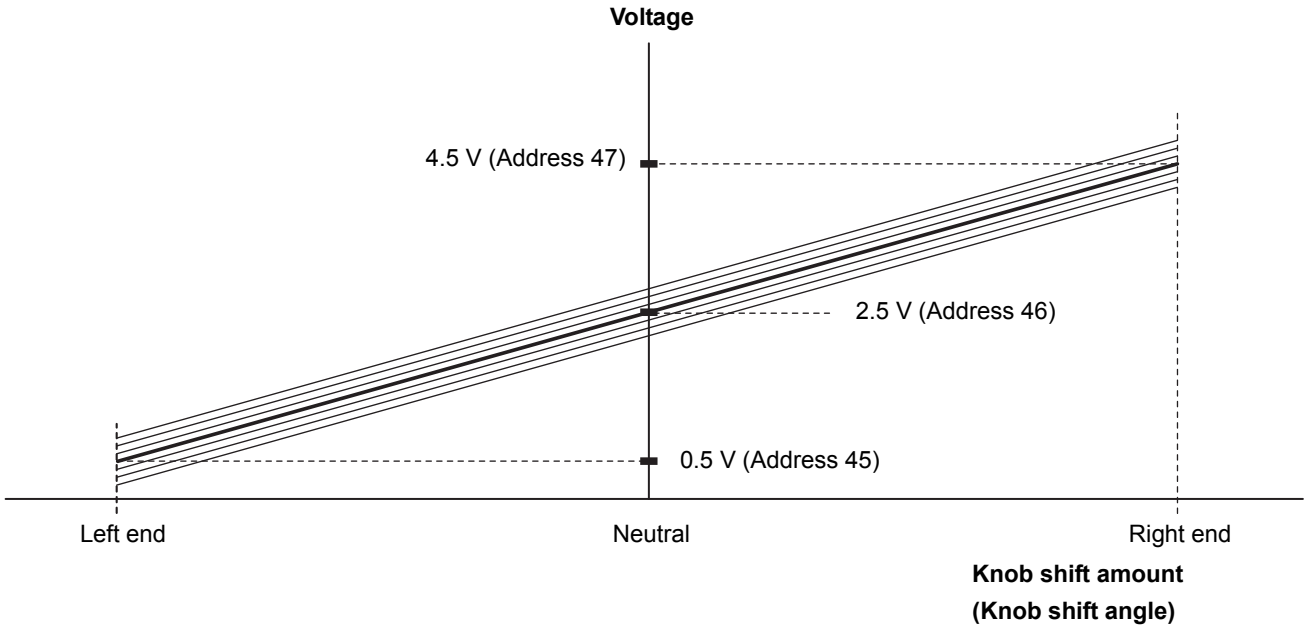

3. Background and meaning of knob initial set-up

1) The output voltages at the neutral, rightmost and leftmost positions of a knob are entered as initial settings. Accordingly, correlation between the knob's right-left shift and the output voltage is stored in microcomputer memory.
2) The voltage generated by the knob's movement is converted by the microcomputer to a PWM control current. In this way, ordinary operations can be carried on under proportional control.
3) Also the voltages at the neutral, rightmost and leftmost positions of a new control knob are entered as initial settings in microcomputer memory. Such data serves to control the output voltage in proportion to the knob's movement.
4) Suppose that you have replaced a control knob but forgotten to make its initial settings. The previous knob's data, still in microcomputer memory, may be slightly different from new entries. This may cause different operating feelings.
5) These settings can be made with the key on. Thanks to the built-in temperature compensation function, there is no problem with ambient temperatures in making the settings.

FYI (For Your Information)

1. Knob switch and Hall element (IC chip)

The knob switch has a temperature-compensated Hall element incorporated. The Hall element consists of a magnet and a coil as shown below. A kind of sensor, this switch has the tilt angle Éý, which changes the quantity of magnetism. This quantity is converted to voltage. The input voltage is set at 5 V maximum. With the knob switch at neutral position, the output is about 2.5 V.

2. Hall effect

Let's suppose, as shown in Fig. 1, that a current is applied to a rectangular solid and a magnetic field is added perpendicular to the direction of current. There will be a voltage that is perpendicular to the direction of current as well as to the direction of magnetic field. This phenomenon is called the Hall effect, and the voltage thus generated is called the Hall voltage.
This effect was discovered by American physicist Edwin H. Hall in 1879. The effect has the nature of taking place very frequently with semiconductors, but rarely with conductors.

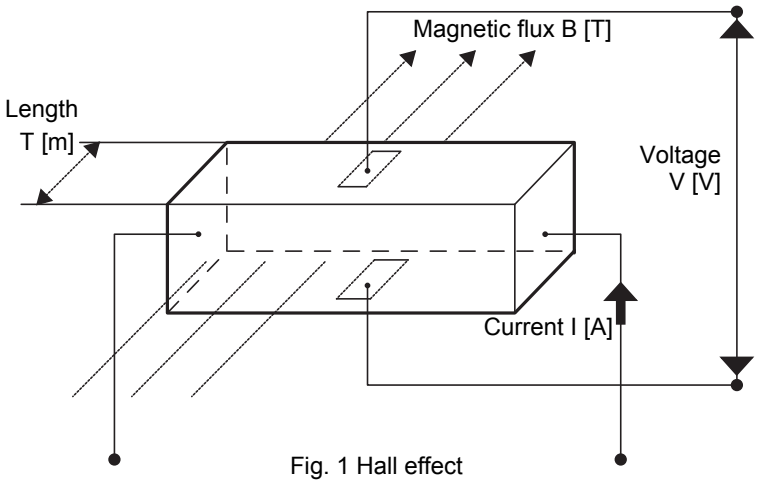

Fig. 1 Hall effect

3. Hall element

The Hall effect is discussed above. The Hall element includes semiconductors that produce the Hall effect. Given that the effect takes place very frequently with semiconductors, but rarely with conductors, semiconductors are used to make the Hall element.
Here are the materials to make the Hall element.
- Silicon (Si)
- Germanium (Ge)
- Gallium arsenide (GaAs)
- Indium arsenide (InAs)
- Indium antimonide (InSb)

f. S/P valve start point setting

1. Performance characteristics profile: Knob shift amount vs Output current

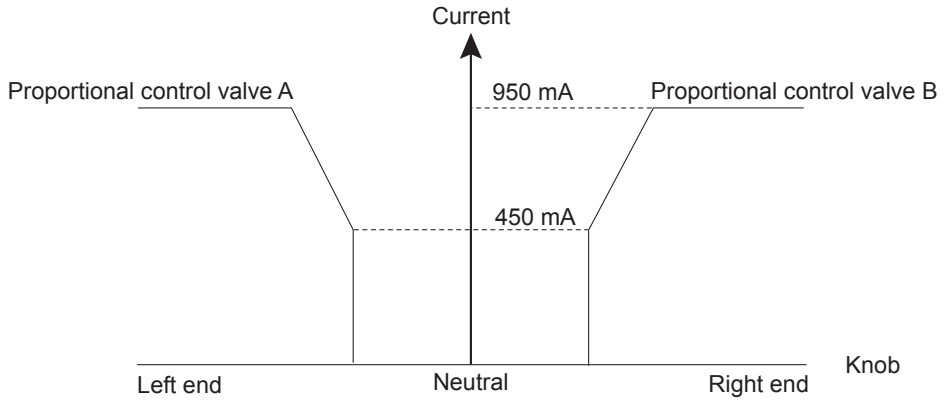

1) A dead zone is provided to keep the thumb intact in neutral. Some margins are also given to start the thumb at each end.
2) The right-end, neutral, and left-end settings of the knob are presupposed to be in memory.
3) The profile is flexibly modifiable even for maximum engine rpm and idling speed. When the engine runs at middle speed, for example, the average is determined from the idling map and maximum map and finally outputted.
4) Suppose that the thumb starts moving at the current of 500 mA. The knob's operating map must begin with 450 mA because it is necessary to provide an inching zone and give better feeling.
5) At the 500mA level, however, there could be fluctuations due to the control valve, proportional control valve, hoses and other factors. The meter keeps the initial map and performs as well, but the inching zone might be longer or shorter depending on the machine.
6) The starting point setting is made to cope with such problem. In the setting mode, the meter shows the current gradually higher from 450 mA. When the thumb starts moving, the operator is supposed to press and release the button twice for releasing and grasping of the thumb. The meter memorizes the then setting.

   Address 48: → Release R Deviation

   Address 49: → Grasp L Deviation

   The following correction is made for control.

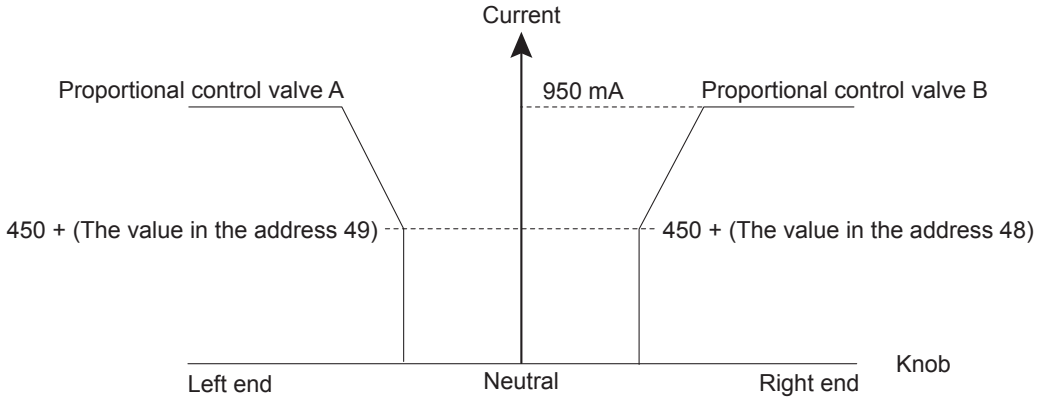

7) Service engineers do not notice, but at Hirakata Factory and KBM, the starting point has been measured at the service port (red pressure measuring port for North America and Europe) and fluctuations have been put in the meter memory. At the manufacturing plants, however, the machine is not equipped with any thumb attachment. Actually, the starting point is expected to be measured locally. It would take dealers trouble.

   At the manufacturing level, therefore, a pressure take-out plug is prepared. Although a thumb is not attached, a current flows to the proportional control valve and the pressure level changes at a certain point. This pressure level is detected and put into memory.

   Note: 450 mA and 950 mA are default values before setting in the factory.
   Actual value may differ model by model and machine by machine after the factory setting up.

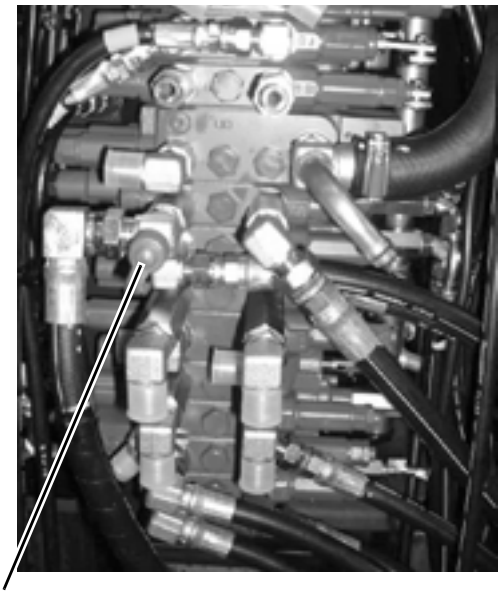

(1) Pressure port

8) Fortunately, the dealers are expected to do just the following in the field

(1)	Usually →	Just install the attachment (Thumb) and connect the service port hoses. →
(2)	When the meter is replaced →	Make the knob initial setting and the starting point setting. →
(3)	When the knob is replaced →	Make the knob initial setting. →
(4)	When the proportional control valve replaced →	Make the starting point setting, knob initial setting →

The above knob initial setting and starting point setting are required. Otherwise the performance may be unstable depending on finish accuracies of the component parts.

2. Background and meaning of start-point setting

1) The purpose of this setting is to keep the knob's operating force of starting the attachment (thumb cylinder) constant whether the engine runs idle or at maximum speed.
2) The proportional control valve's start-point is activated when you have slowly moved the knob to start the attachment that is connected with the service port circuit.
3) The knob's action point is referred to in some different factors: knob's movement, output voltage, controller's output PWM current, proportional control valve's hydraulic pressure, pilot secondary pressure of service port main control valve, and hydraulic pressure of attachment (thumb cylinder, for example).
4) The start-point setting works as follows. When a component of the service port system line has been replaced, the component with its slightly different individual behavior pattern may delicately affect the line's final output. To compensate such deviation, the initial setting (star-point setting) must be entered in the controller.
5) The following factors are important in affecting the start-point.
   (1) Oil temperature
   (2) Engine rpm
   (3) Proportional control valve
   (4) Main control valve, service port section
   (5) Service port load fluctuations
6) These factors are therefore considered for the start-point setting.

(1)	Oil temperature	→	50 °C
(2)	Engine rpm	→	Idling, Maximum
(3)	Proportional control valve	→	At each replacement
(4)	Main control valve, service port section	→	At each replacement
(5)	Service port load fluctuations	→	Basically it is preferable to make the setting for each attachment. If it does not feel unusual, however, it can be up to the user's judgment.

3. Illustration of the start-point setting

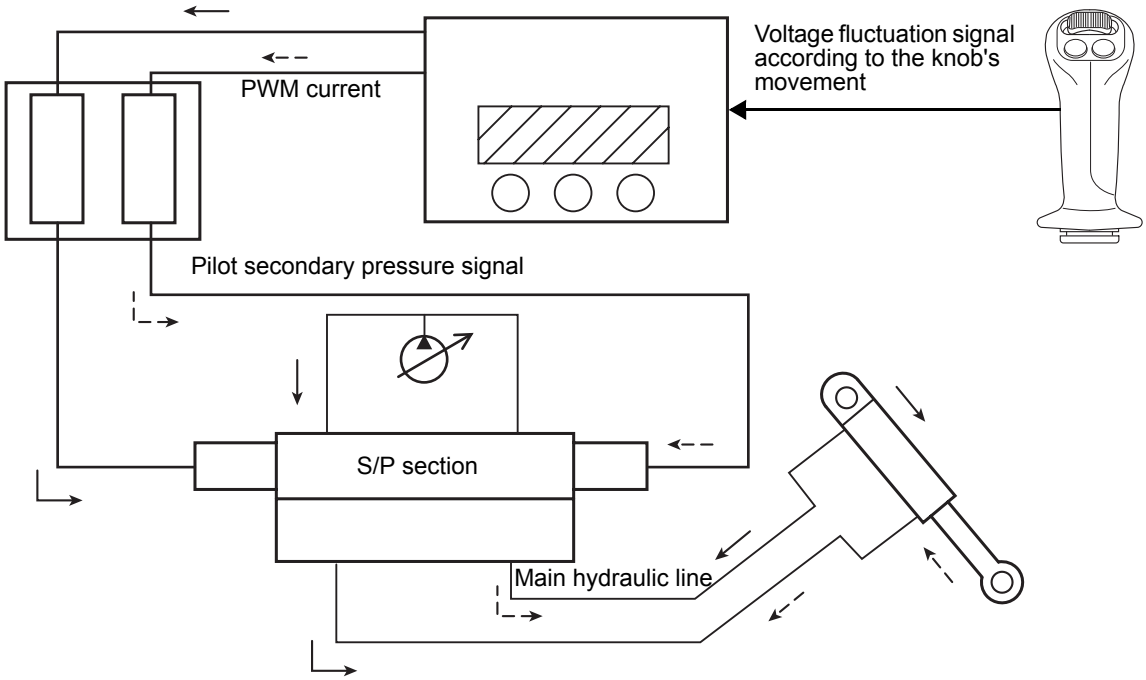

Move the knob, and you will find the point where the thumb cylinder starts moving. Just when the cylinder gets activated, press the selector switch. Do this for the right and left movements of the knob.
Does control start when the start-point has been reached?

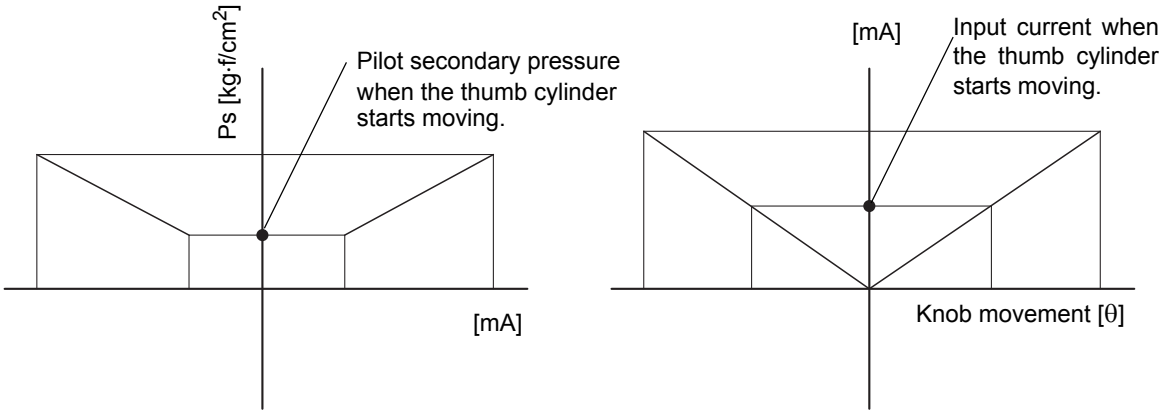

4. Concrete behavior at the start-point setting

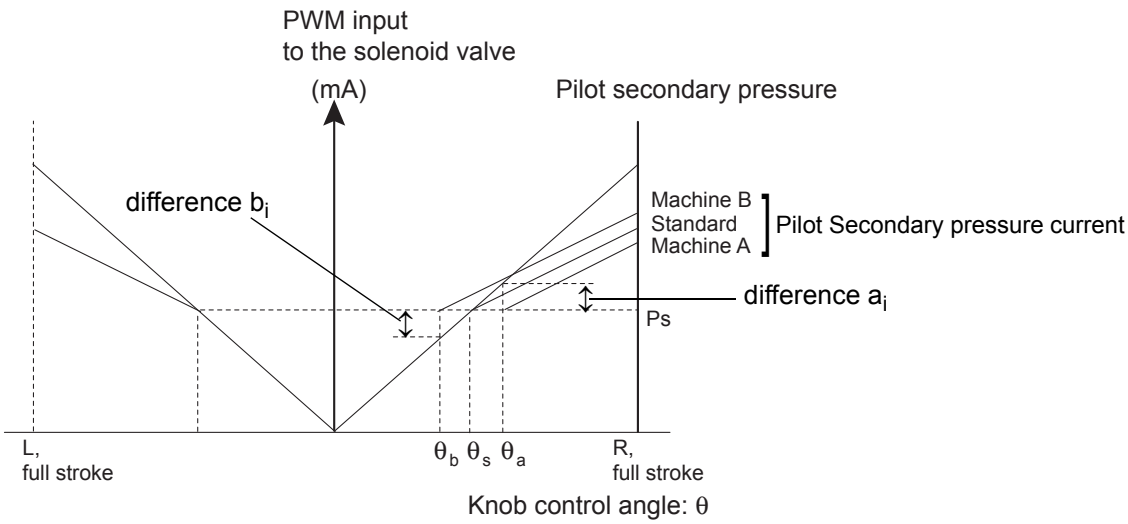

θ_s:standard knob angle to start S/P
θ_a:Machine A knob angle to start S/P before set-up.
θ_b:Machine B knob angle to start S/P before set-up.

Set-up target is to start attachment (thumb cylinder) at the constant same knob control angle, θ_s. As shown in above Fig., machine A starts at θ_a, machine B at θ_b.
In order to get both machines start at θ_s, controller outputs the PWM current by adding the difference a_i or by subtracting the difference b_i to machine A and B respectively.
Start point set-up is to test the difference a_i, b_i and input their data to the controller. So that the controller can calculate and output the required amount PWM current to start the attachment at the same knob control angle θ_s.
Why set-up at engine Max. rpm?
For safety purpose, start-up point is earlier at engine Max. speed than at idle speed.

5. S/P valve initial set-up flow chart

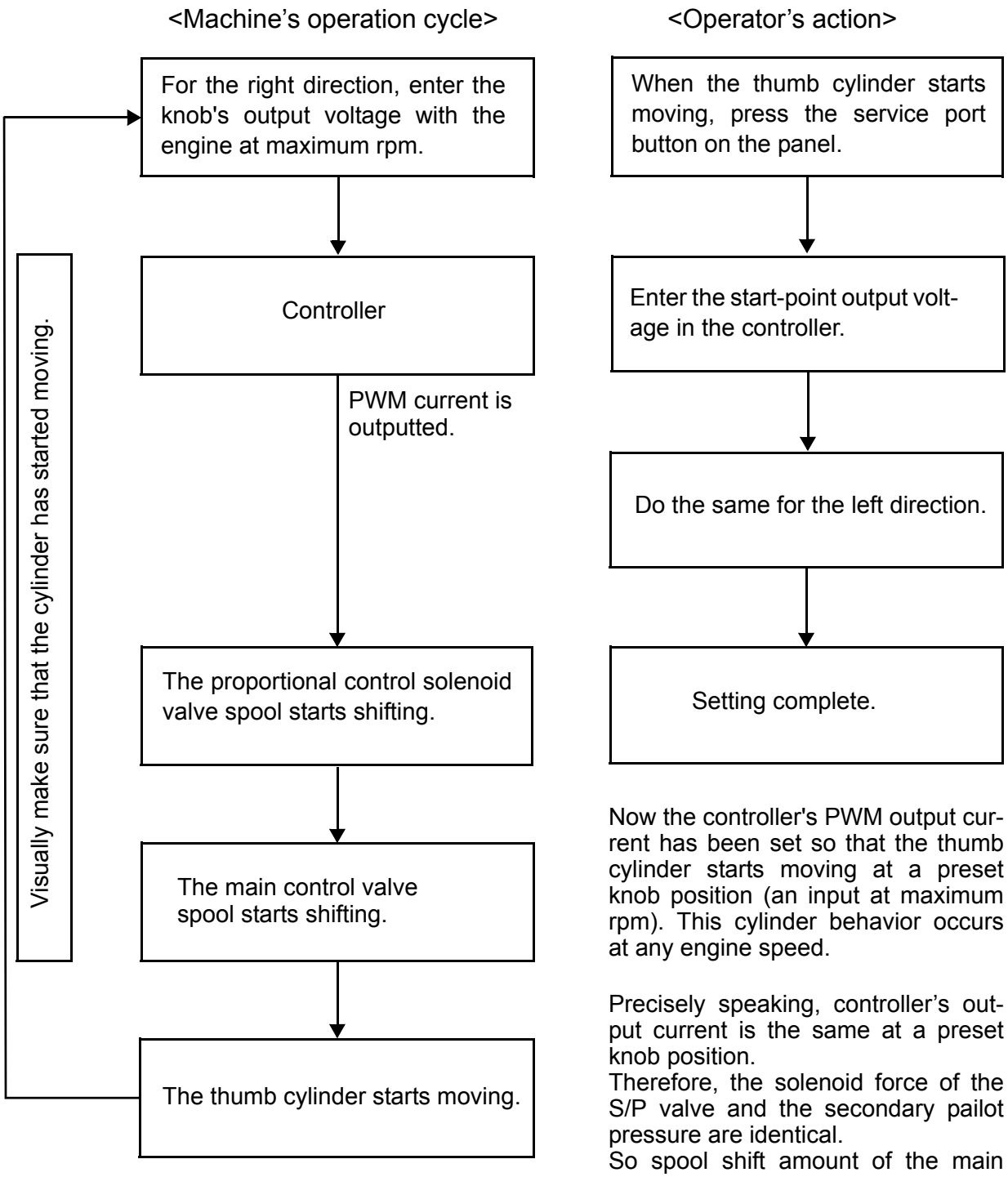

Now the controller's PWM output current has been set so that the thumb cylinder starts moving at a preset knob position (an input at maximum rpm). This cylinder behavior occurs at any engine speed.

Precisely speaking, controller's output current is the same at a preset knob position.
Therefore, the solenoid force of the S/P valve and the secondary pailot pressure are identical.
So spool shift amount of the main control value section is the same.
But as the main pump delivery rate varies and so thumb cylinder's starting point varies according to the engine speed to same extent.
Then why do the start-up setting at max. engine speed?
For safety.

g. Manual feeling setting

1. Outline of manual feeling setting

Basically, the thumb is supposed to move smoothly by the starting point setting, but one may feel poor. To ensure good feeling, therefore, this mode is added.

Setup
Service port feeling adjust

	Right	
Slow	-12	Fast

↑

(This value x 5 mA) is added to the map.

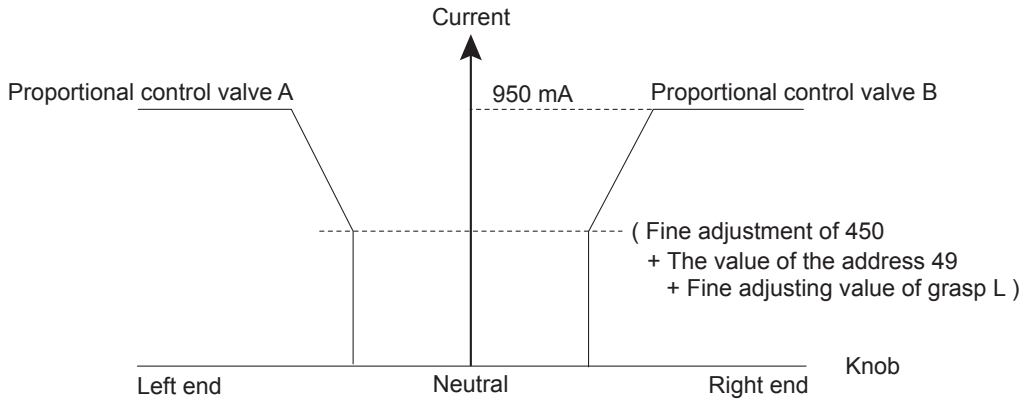

The right and left fine adjustment values are put to addresses 62 and 63, respectively, in the memory.
These values will become zero when the starting point setting of a model has been made.
When address 62 is set at "5", the setoff will be 25 mA: when set at "FFFF", the setoff will be -10 mA.

2. Knob shift amount and output current

Then actually move the knob, and ensure a good current-duty map at the current of 500 mA and the oil-flowing current.
The proportional control valve, however, is rather unstable in its temperature characteristics (temperature vs. resistance). Such control is still required. (Dark current theory)

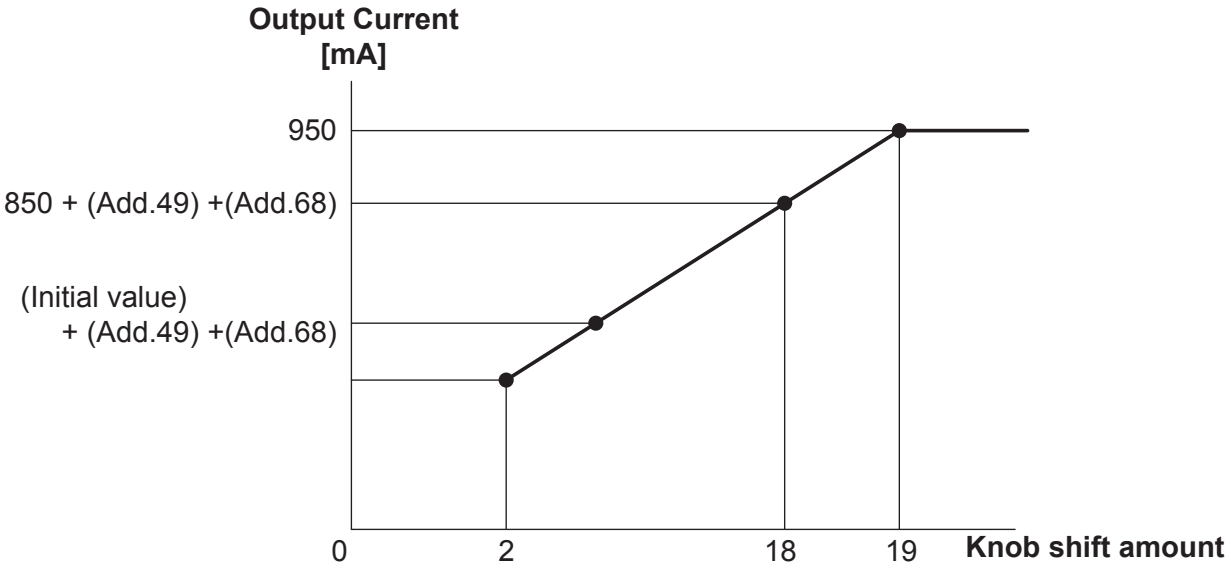

h. Panel display operation flow chart

1. Outline (S/P knob, S/P valve, S/P feeling adjust)

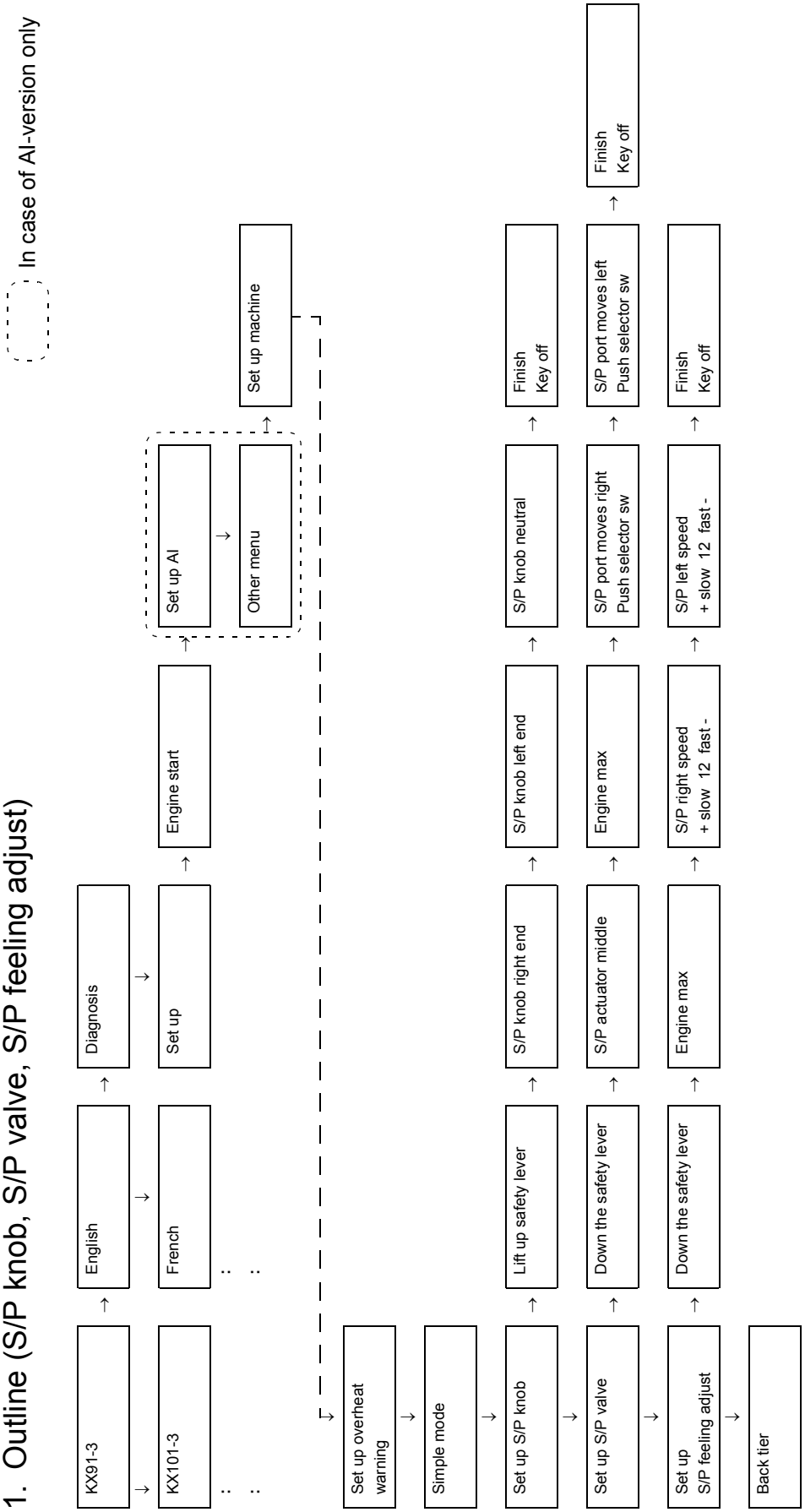

2. Display flow chart with photo

→ KX91-3

1. Turn the starter key to ON (AC position) while pressing the display selector switch on the panel.
   Then the machine model comes on the display.

→ English

2. Push the display selector switch long, then language to be selected comes on the display.
   KTC and KTA version display only English. KCL indicates English or French for selection.
   EU version has eleven languages to be selective.

→ Diagnosis

3. Push the display selector switch long, then the display moves to “Diagnosis”.

↓

Set up

4. Push the display selector switch short, then the display moves to “Set up”.

→ Engine start

5. Push the display selector switch long, then the display indicates to “Engine start”.

→ Set up machine

6. Push the display selector switch long, then the display moves to “Set up machine”.

Set up overheat warning

7. Push the display selector switch short, then the display moves to “Set up overheat warning”.
Skip this menu.

↓

Simple mode

8. Push the switch short, then the display shows “Simple mode”.
Skip this also.

↓

Set up S/P knob

9. Push the display selector switch short, the display indicates to “Set up S/P knob”.
   For the Setting-up of the service port knob initialization, press the display selector switch long. This initialization procedure will be illustrated in another pages.

↓

Set up S/P valve

10. Push the display selector switch short, the display indicates “Set up S/P valve”.

↓

Set up
S/P feeling adjust

11. Push the display selector switch short, the display indicates “Set up S/P feeling adjust”.

↓

Back tier

12. Push the display selector switch short, the display returns to “Set up machine”.
    Push the display selector switch long, the display returns to “Set up”.

Note: In one of AI-version machine, the display shows “Set up AI” when the display selector switch is pressed long at “Engine start”.

3. Knob initial set-up

↓

Set up S/P Knob

1. The LCD display shows as “Set up S/P knob”.

2. Push the display selector switch short, then the display shows “Lift up safety lever“. This is for safety purpose.

↓

S/P knob right end

3. Lifting up the safety lock lever moves to the display of “S/P knob right end”.

↓

S/P knob left end

4. Push the display selector switch short, then the display shows “S/P knob left end”.

↓

S/P knob neutral

5. Push the display selector switch short, then the display shows “S/P knob neutral”.

↓

Finish
Key off

6. Push the display selector switch short, the display indicates “Finish Key off”. It means knob initialization has been completely.

4. S/P valve initial set-up

Set up S/P valve

1. As instructed in page ***, you're required to reach the display shows as "Set up S/P valve".

Safety precaution!
Engine is running.

↓

Down the safety lever

2. Shift down the safety lock lever down to control the service port attachment.

↓

S/P actuator middle

3. Get the S/P actuator to the middle point of the full stroke by shifting the S/P knob.

↓

Engine max

4. Set the engine at the max. speed.

↓

S/P port moves right
Push selector sw

5. Push the display selector switch at the moment that the actuator cylinder starts moving to extend.

Note: In case of thumb cylinder, “right” indicates the cylinder to extend. “left” indicates to retract.

↓

S/P port moves left
Push selector sw

6. After being pushed in the above, automatically the display moves over “S/P port moves left”.
Therefore, push the display selector switch at the moment that the actuator cylinder starts moving to retract.

↓

Finish
Key off

7. Then the display changes to “Finish Key off”.

5. S/P operational feeling adjustment

↓

Set up
S/P feeling adjust

1. As instructed in page ***, you're required to reach the display shows as "Set up S/P feeling adjust".

Safety precaution!
Engine is running.

↓

Down the safety lever

2. Shift down the safety lock lever down to control the service port attachment.

↓

Engine max

3. Set the engine at the max. speed.

↓

S/P right speed
+ slow 12 fast -

↓↑

S/P left speed
+ slow 12 fast -

↓

Finish
Key off

4. Slowly slide the S/P knob switch to right direction and check the actuator's starting points.

   If it starts moving too quick, get it slow by pressing the work lamp switch, left end button.

   If it starts moving too slow, get it fast by pressing the service port switch, middle button.
   Digit number indicates the feeling level of slow or fast.

   Pressing the display selector switch short, switches the display to adjust the left or right speed.

After completing the feeling adjustment, just set the key off.

i. Proportional control solenoid valve (S/P valve)

1. Outline

This valve is the combination of electro magnetic solenoid valve and hydraulic reducing valve. Ordinally solenoid valve is controlled ON-OFF by battery 12 V direct current. But this valve is controlled by the PWM (pulse width modulation) current supplied from the micro computer controller incorporated in the meter panel.
Valve spool function is basically the reducing valve same as the hydraulic pilot control valve, normally used for the lever control. Difference is as follows.
The hydraulic pilot control valve regulates the pilot pressure, balancing to the operator's manual force. This S/P valve is regulated by the PWM current. In either case, this pilot pressure is so-called the secondary pilot pressure to control the spool stroke of the main control valve.

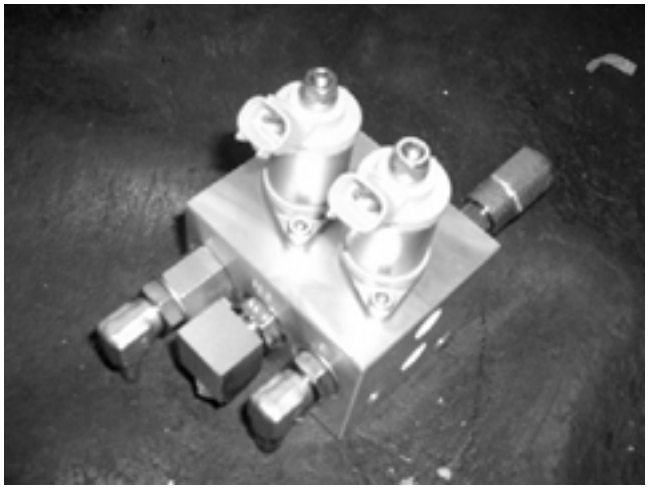

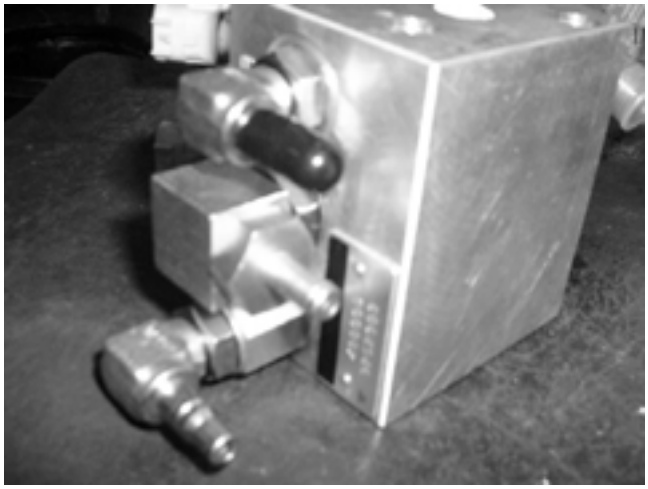

2. Structure and function

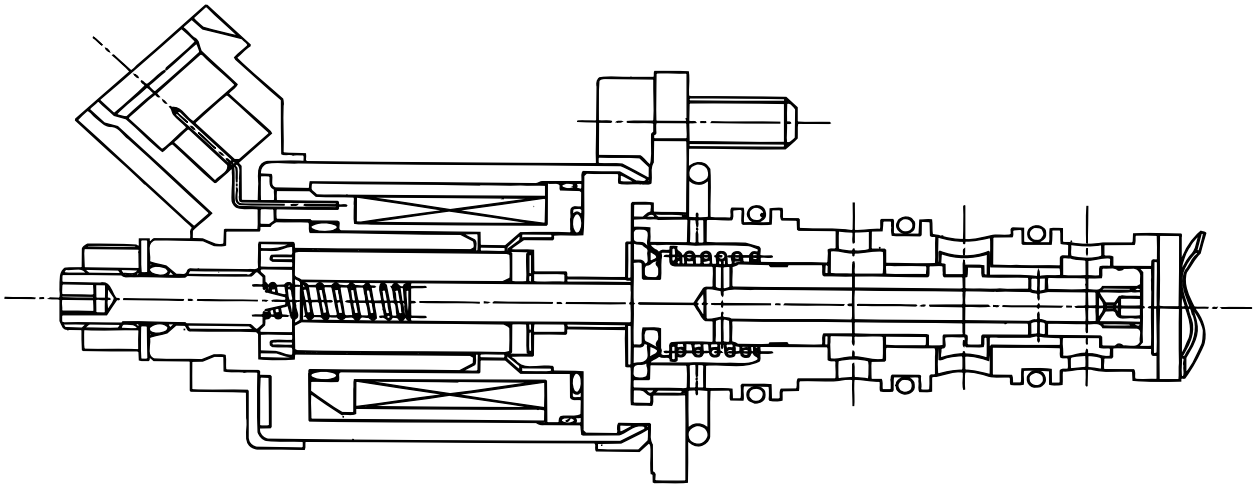

(Hydraulic symbols)

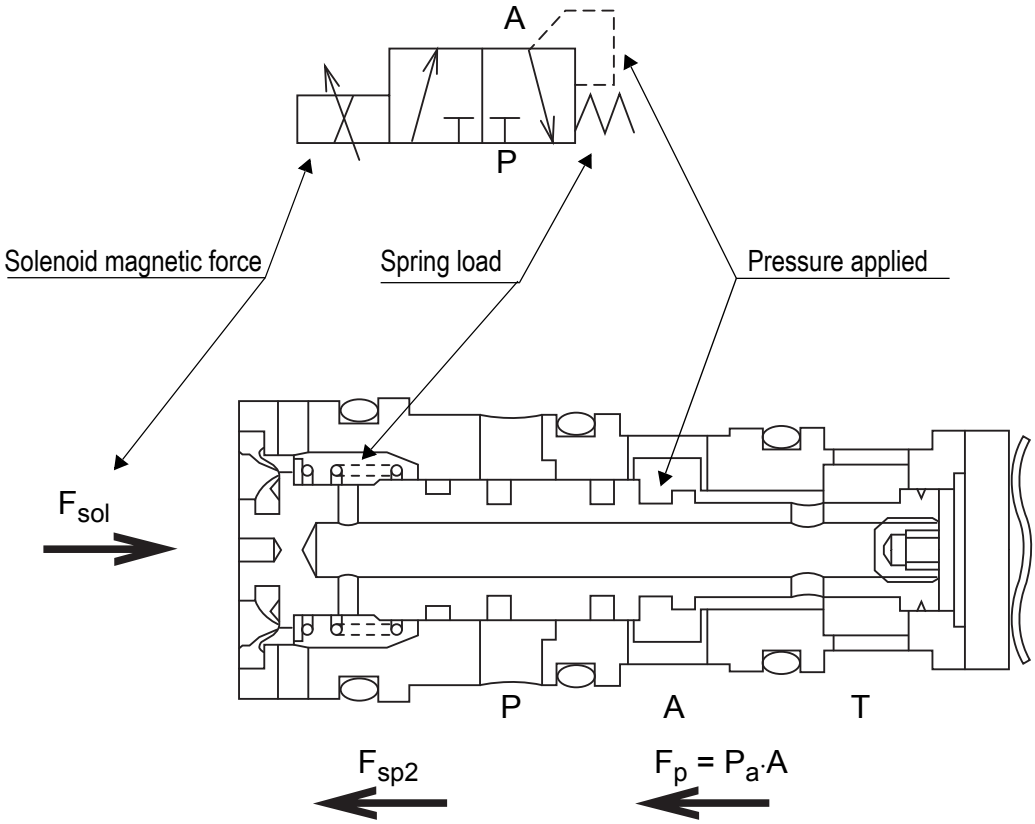

3. Function theory

Behavior of proportional valve

Balance of proportional valve forces

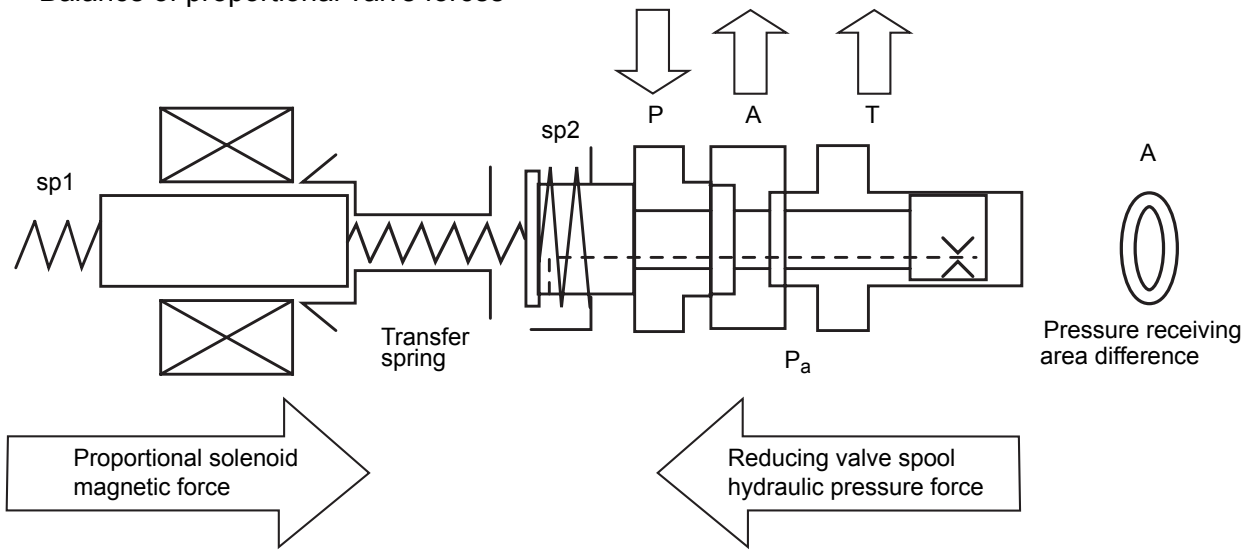

Behavior of solenoid proportional valve

Definitions of values

F_{sol}: Solenoid magnetic force generated according to current

F_{sol} = C1 x I (C1 and I are solenoid's intrinsic constant and current, respectively.)

F_{sp1}: Solenoid's spring load

F_{sp2}: Valve's spring load (constant during pressure control)

F_p: Pressure applied by setup area difference

F_p = A x Pa (A and Pa are setup area difference and pressure at port A, respectively.)

P: Primary pilot pressure from the pilot pump controlled by the unload relief valve

P_a: Secondary pilot pressure to control the main control valve spool

Balance of forces

The balance of forces for the valve spool (see above) is expressed like this.

$$F_{sol} + F_{sp1} = P_a \cdot A + F_{sp2}$$

When the left term is greater, the spool moves rightward and ports P and A open one after the other.

When the right term is greater, the spool moves leftward and ports A and P open one after the other.

The above expression is rearranged as follows.

$$F_{sol} + F_{sp1} - F_{sp2} = P_a \cdot A$$

$$P_a = \frac{F_{sol} + F_{sp1} - F_{sp2}}{A}$$

Spool control performance I-P curve

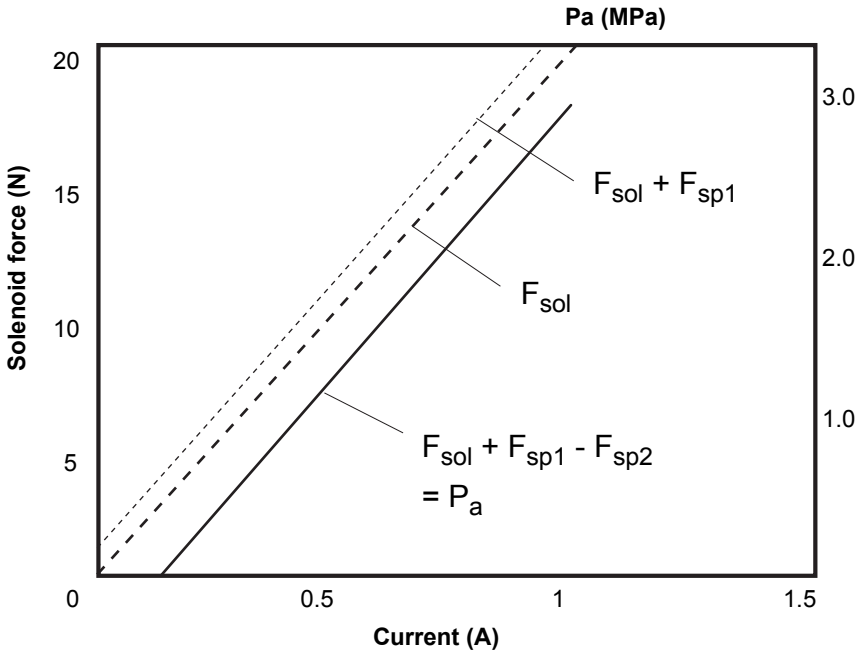

Spool opening area

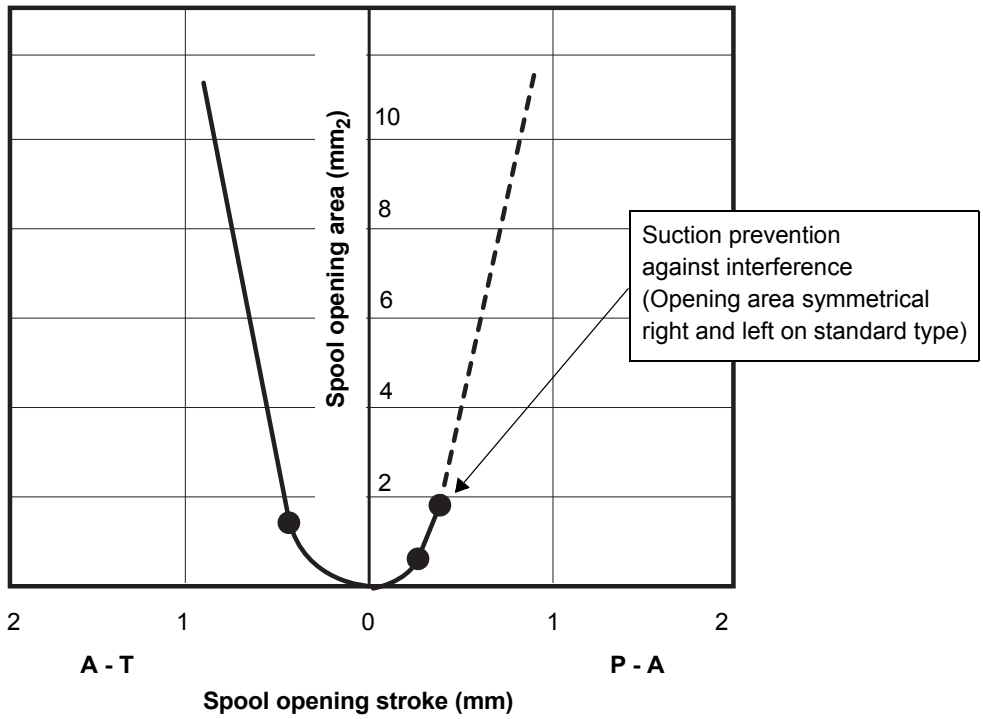

A - T: Actuator to tank

P - A: Pump to actuator

j. Other controls

1. Model number display

Displayed in the case of AI specifications.

2. Automatic service port identification

With the key on, a current of 250 mA or so is made to flow in the service port proportional control valve. When feedback is available, the machine is of service port type. If not, the machine has no service port.
This automatic identification is added because some machines have service port and the others have not. It should be noted that the map profile is different from model to model and from destination to destination (Europe and North America).

3. Fool-proof control.

When the service port sensor reads below 0.25 V or over 4.75 V for 0.2 second:
Nothing displayed, however, out of the service mode.

4. Idle-up control

The idling speed increases by 150 rpm when the water temperature drops below 30 centi-degrees (Reason: Even at the same governor position, the engine speed drops about 150 rpm at the temperature of -18 centi-degrees.)

5. Compressor control

When the compressor is on, the idling speed is raised by 150 rpm.
The idea is as follows.
If the compressor is repeatedly turned on and off and kept off for 3 seconds, the idling speed gets back to its original rpm. In this way, the AI motor can be kept from getting activated many times.
(Reason: If the compressor is on and the alternator barely generates power, the battery, if connected to an external load, may fail to work.)

k. Troubleshooting

1. Troubleshooting

Following troubleshooting is based on below preconditions.
Therefore: 1. Hydraulic oil quality and quantity are normal.
2. Hydraulic pump P_1, P_2, P_3, P_4 are OK.
3. All the functions except service port system are normal.

Fail symptom	Suspected causes	Check points
a. Service port attachment does not work at all. (Thumb's failure to move in both directions; Breaker's failure to crush; Auger's failure to turn)	1. Knob switch harness is cut or coupler is disconnected.	Knob harness, fuse and switch coupler.
	2. S/P valve harness is broken or coupler is disconnected.	S/P valve harness and coupler.
	3. S/P valve spool is stuck inside.	S/P valve spool.
	4. Main S/P valve spool is stuck inside.	Main control valve S/P section.
	5. S/P valve pressure is quite low in both side.	Test the S/P valve pressure.
b. Thumb does not work in one direction at all.	1. S/P valve solenoid harness is broken one side.	S/P valve harness.
	2. S/P valve spool is stuck inside.	S/P valve spool.
	3. Main control valve S/P section is stuck one side.	Main control valve S/P section.
	4. Knob switch initial setting error.	Knob switch initial setting.
	5. S/P valve pressure is quite low in one side.	Test the S/P valve pressure.
c. Service port attachment moves slower than specified in both directions.	1. S/P valve start-up setting error.	Do S/P valve start-up setting.
	2. Current amount from the controller is not enough.	Knob switch initial setting.
		Meter panel (Controller) output current.
	3. S/P valve spool moves heavy and slow.	S/P valve spool.
	4. S/P valve pressure is low in both sides.	Test the S/P valve pressure.
	5. Main control valve S/P section spool won’t shift at full stroke.	Main control valve S/P section spool.
d. Service port attachment moves slower than specified in one direction.	1. Knob switch initial setting error.	Do knob switch initial setting.
	2. S/P valve start-up setting error.	Do S/P valve start-up setting.
	3. Manual feeling setting error.	Do manual feeling setting.
	4. Main control valve S/P section spool one side won’t shift at full stroke.	Main control valve S/P section spool.
e. S/P attachment moves at neutral position of knob switch	1. Knob switch initial setting error.	Do knob switch initial setting.
	2. S/P valve spool is stuck at one side.	S/P valve spool.
	3. Main control valve S/P section spool is stuck at one side.	Main control valve S/P section spool.

C. Hydraulic system modification

a. Outline

In order to improve further “Load Sensing Performance”, pump and control valve have been changed in several parts. Main parts of minor change are as follows.

1. Hydraulic pump: KX121-3S·α, 161-3S·α, U45-3α

(1) Valve plate opening performance improved
End milling finish to V-shape notch
(2) Piston shoe type change
Multi-pad type to single-pad type
(3) Cylinder block center spring foree upgraded
(4) Swash plate shape change
(5) Swash plate pin shape change
(6) PC regulate spool pin dia. $\phi 3.5 \rightarrow \phi 3.2$
Horse power spring change
(7) LS valve compact size
PC orifice $\phi 0.6$ added

2. Control valve: KX121-3S·α, 161-3S·α, U45-3α

(1) Damper chamber added in the unload valve (orifice $\phi 1.2$)
(2) In order to achieve the stable response of PLS signal line;
$\phi 1.0$ orifice added in valve’s PLS port plug.
Hose volume (1/4” × 350mm length) added.
(3) Shuttle plate change;
Outer dia is approx. 20μm larger in minor change
(4) Compensation spools of arm, bucket and swivel;
orifice machining deleted.

3. Travel motor: KX121-3S·α, 161-3S·α, U45-3α

(1) Moter swash plate:	Light weight type
(2) Hi-Low piston:	Shape change
(3) Thrust plate:	Shape change
(4) Sun gear:	Snap ring removed
(5) Ring nut:	Casting iron to steel iron
(6) Reduction gear case drain port size:	G 1/4, hex. 6 → G 3/8, hex. 8

4. Role of hose volume (1/4” × 350mm)

The hose volume control that is attached on the control valve serves as a sort of damper. At a start of operation in particular (to start traveling, for example), it is effective in avoiding a sudden surge pressure and preventing the machine from starting with a jerk. In other words, violent fluctuations of load pressure can be eased, which improves the operator’s control feeling. Below discussed is a theoretical explanation of the hose volume control behavior.
At very low temperatures, the throttling effect of the orifice in the system is greatly affected, usually causing delays in response. Let’s suppose shifting the travel lever forward under low temperatures, for example. Possibly the machine may fail to respond quickly or it may take too much time to get started. In such cases, preferably remove the hose volume control for better damping effect, and install the plug attached on previous models. Keep in mind, however, that the higher the oil temperature rises, the quicker the reaction becomes.

b. Hydraulic pump: KX161-3s, KX161-3α

1. Pump installation: KX161-3S·α, U45-3α

(1) Adapter tightening torque

P port (G3/4)	117.6 ~ 127.4N·m (12.0 ~ 13.0kgf·m)
P_{PS}, P_{LS}, CH port (G1/4)	24.5 ~ 29.4N·m (2.5 ~ 3.0kgf·m)
P_P port (G3/8)	49.0 ~ 53.9N·m (5.0 ~ 5.5kgf·m)

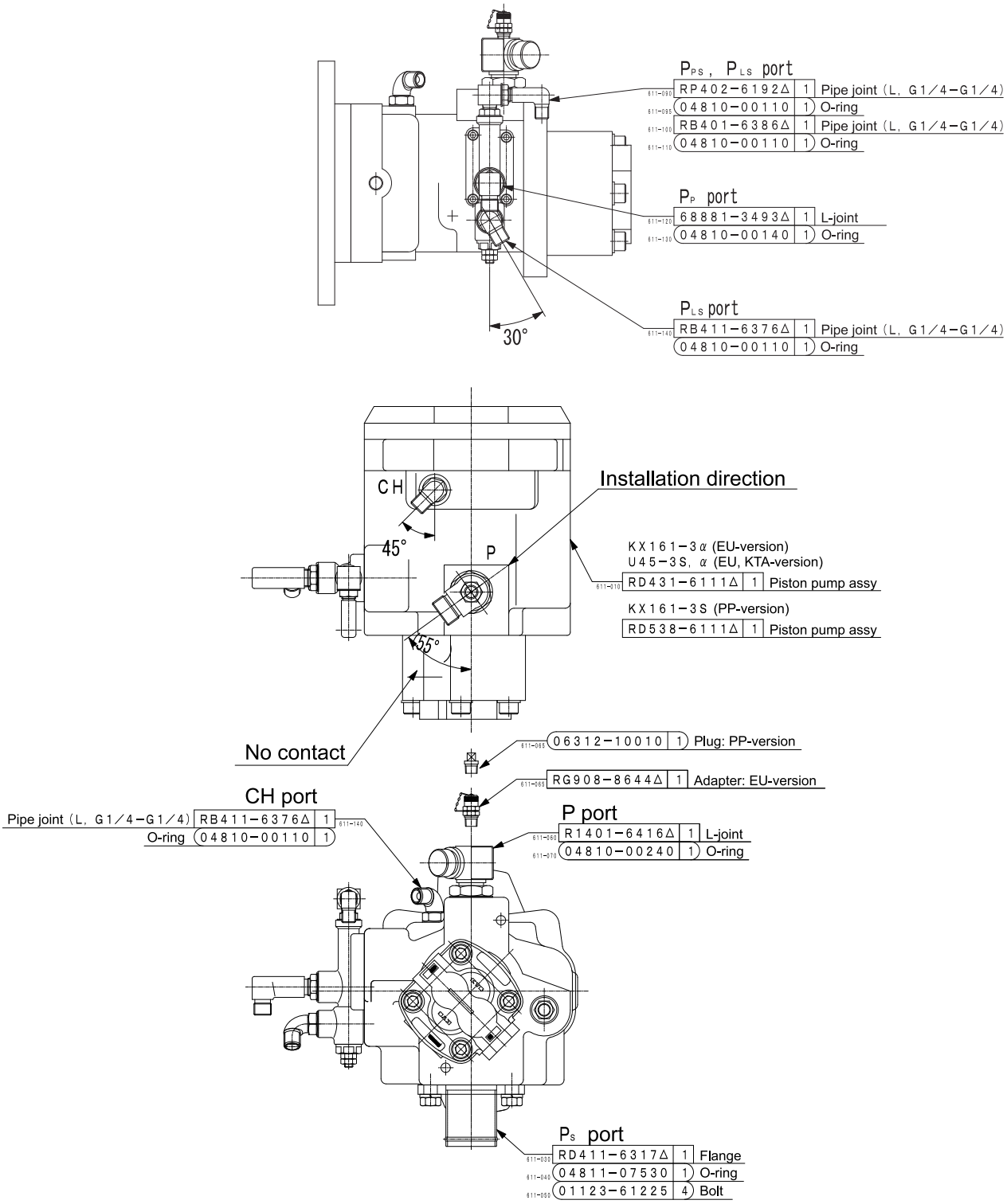

2. Piston pump: KX161-3S (PP), KX161-3α (EU), U45-3α (EU, KTA)

1) SPECIFICATION

PISTON PUMP	MAX. DISPLACEMENT	cm³/rev	54.0
	MAX. PRESSURE	MPa	24.5
PILOT PUMP (GEAR PUMP)	MAX. DISPLACEMENT	cm³/rev	4.12
	MAX. PRESSURE	MPa	4.12
MAX. SHAFT SPEED	KX161-3α, KX161-3S	r.p.m.	2250
	KX161-3S		2200
DIRECTION OF ROTATION (VIEWED FROM SHAFT END)			RIGHT(CLOCKWISE)
WEIGHT		kg	34

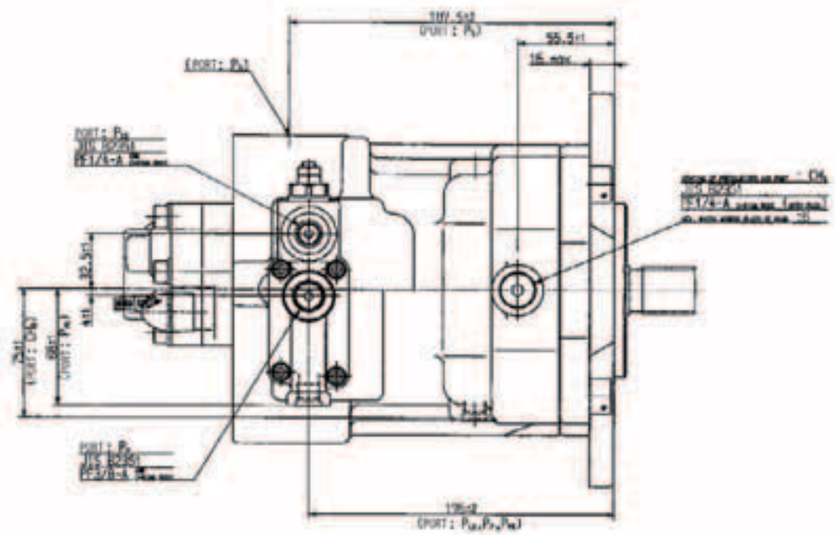

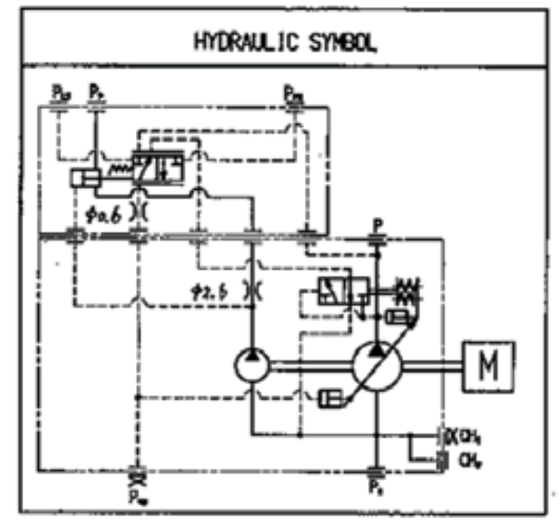

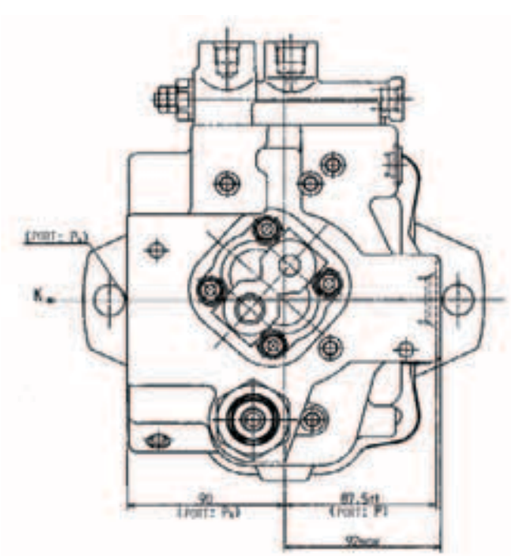

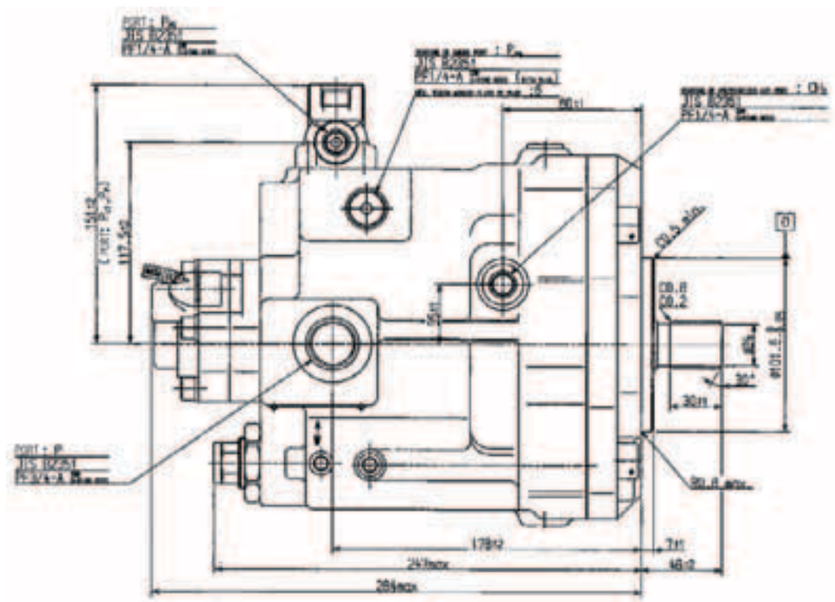

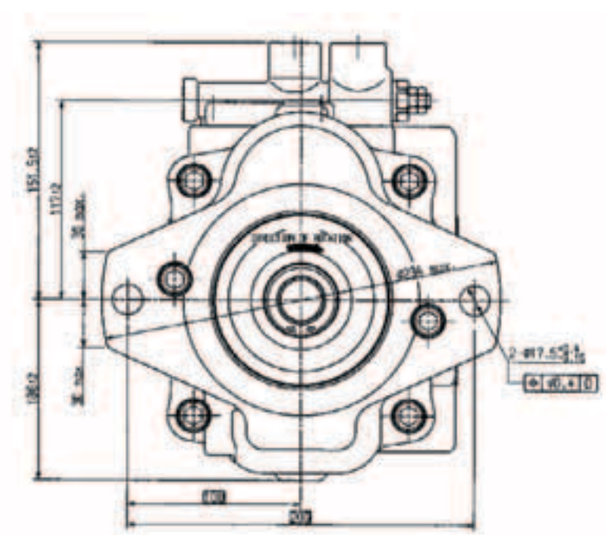

NOTES
1. FILL PUMP CASE WITH OIL BEFORE STARTING.
2. WHEN A COUPLING IS INSTALLED INTO A SHAFT, DO NOT HIT THE SHAFT.
3. "~~" MARK SHOWS THE UNMACHINED SURFACE OF THE PUMP.

2) TIGHTENING TORQUE

ITEM No.	DESCRIPTION	SIZE	TIGHTENING TORQUE N·m
12	SCREW	M 5	5.9 {60}
30	ORIFICE	M 5	15.3 {155}
30-2	SLEEVE, VALVE	M 30	———
30-6	PLUG	PF 3/8	37.8 {385}
44	NUT	M 30	68.6 {700}
47	BOLT, SCH.	M 8	39.9 {406}
50	BOLT, SCH.	M 12	108.9 {1110}
51	PLUG	PF 1/4	25.4 {259}
52-5	CAP	M 18	22.6 {230}
52-6	NUT	M 18	49.0 {500}
52-7	NUT	M 8	8.9 {91}
52-9	SET SCREW	M 5	———
56	BOLT, SCH.	M 5	12.05 {123}
70	ORIFICE	M 5	2.45 {25}

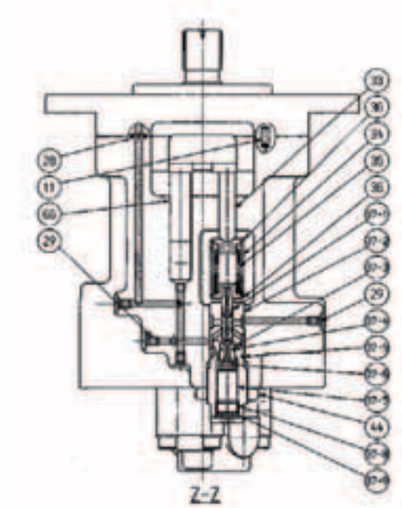

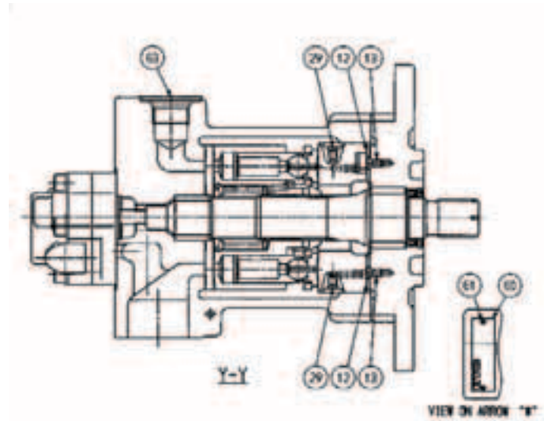

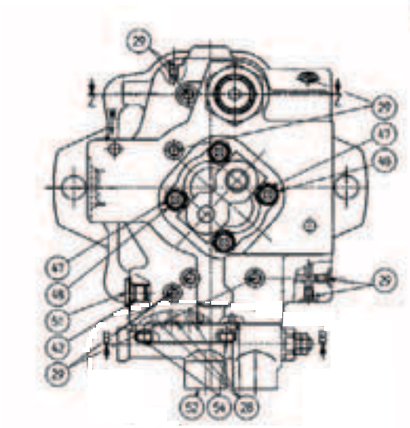

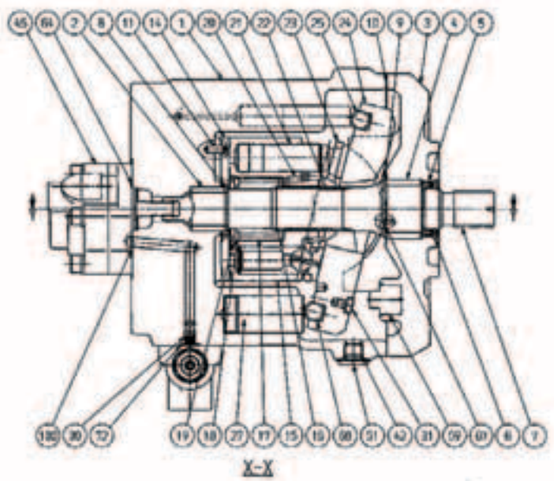

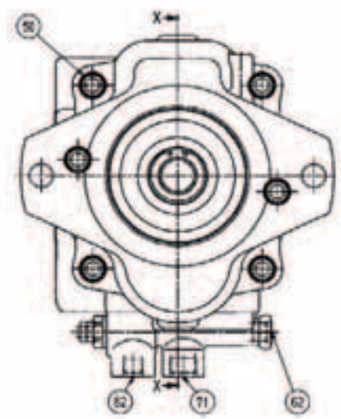

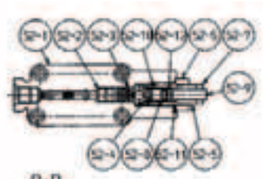

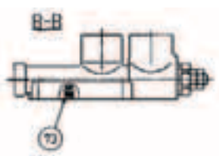

ITEM No.	DESCRIPTION	QTY	MATERIAL	SPEC
1	CASE	1		
2	BEARING, NEEDLE	1		
3	FLANGE	1		
4	BEARING, NEEDLE	1		
5	SEAL, OIL	1		
6	RING, SNAP	1		
7	SHAFT	1		
8	WASHER, THRUST	1		
9	WASHER, THRUST	1		
10	GASKET	1		
11	PIN	3		
12	BUSHING	2		
13	SCREW	2		
14	PLATE, VALVE	1		
15	BLOCK, CYLINDER	1		
16	COLLAR	1		
17	SPRING	1		
18	COLLAR	1		
19	RING, SNAP	1		
20	PIN	3		
21	PISTON ASSY	9		
22	HOLDER, RETAINER	1		
23	PLATE, RETAINER	1		
24	PLATE, SWASH	1		
25	PIN	1		
27	PIN	1		
28	O-RING	5		
29	PLUG	17		
30	ORIFICE	1		
31	STOPER	1		
33	PIN	1		
34	SPRING	1		
35	SPRING	1		
36	SEAT, SPRING	2		
37	VALVE ASSY	1		
39-1	SPOOL	1		
39-2	SLEEVE, VALVE	1		
39-3	PISTON, SERVO	1		
39-4	O-RING	1		
39-5	O-RING	1		
39-6	PIN	1		
39-7	COLLAR	1		
39-8	PLUG	1		
39-9	O-RING	1		
42	O-RING	2		
44	NUT	1		
45	PUMP, GEAR	1		
47	BOLT, SCH.	2		
48	WASHER	2		
50	BOLT, SCH.	8		
51	PLUG	2		
52	VALVE ASSY	1		
52-1	BODY, VALVE	1		
52-2	SPOOL	1		
52-3	BUSHING	1		
52-4	SEAT, SPRING	1		
52-5	CAP	1		
52-6	NUT	1		
52-7	NUT	1		
52-8	HOLDER	1		
52-9	SCREW, SET	1		
52-10	SPRING	1		
52-11	O-RING	1		
52-12	O-RING	1		
54	BOLT, SCH.	6		
55	STOPER	1		
60	PLATE, NAME	1		
61	SCREW, DRIVE	2		
62	PLUG, SHIPPING	3		
63	PLUG, SHIPPING	1		
64	O-RING	1		
66	PIN	1		

3. Specifications of pump

Model: PSVL-54CG

Item			Specifications	Remarks
Basic spec.	Displacement	Piston pump	13.0 ~ 54.0 cm^3/rev	
		Gear pump	-	
		Pilot pump	4.0 cm^3/rev	Gear pump
	Direction of rotation		Right (Clockwise)	As seen from the shaft
	Pilot relief set press		3.9 MPa	
	Drain pressure		Less than 0.098 MPa	
	Section press		-0.04 ~ 0.07 MPa	HYD. oil: VG46, HYD. oil temp: 50 °C, 2450 rpm
	Filter		10 μm equivalent	
	Straner		150 mesh	
	HYD. contamination classes		Within NAS 9	
Customer spec.	Engine horse power	KX161-3α, U45-3α	28.7 / 29.4 kw	
		KX161-3S	34.6 kw (Gross)	
	Shaft speed	KX161-3α, U45-3α	1000 ~ 2250 rpm Max. unloaded: less than 2450 rpm	
		KX161-3S	1000 ~ 2200 rpm Max. unloaded: less than 2450 rpm	
	Max. working Pressure	Piston pump	24.5 MPa	Piston pump pressure: P
		Gear pump	-	
		Pilot pump	4.12 MPa	Pilot pump pressusre: P_p
	Max. pump flow	Piston pump	118.8 (121.5) L/min	at 2200 (2250) rpm
		Gear pump	-	
		Pilot pump	8.8 (9.0) L/min	at 2200 (2250) rpm
	Max. input torque	KX161-3α, U45-3α	108.0 (108.0) N·m	at 2200 (2250) rpm
		KX161-3S	118.0 N·m	at 2200 rpm
	HYD. oil		Oaphny super hydro 46 Shell terras K46	VG46 equivalent
	Hydraulic oil temperature at tank		Ordinary use: -10 ~ +80°C	
			Short time use: -20 ~ +90°C	
	Drive system		Input shaft: Direct drive	No radial load
General spec.	All efficiency (Typical value)		79 %	VG46, 50 °C, 2200 rpm, 13.7 MPa
	Control method		Power constant control Load sensing control	Proportional LS control pressure
	Horse power setting		24.8 kw	at 2200 rpm
	Max. pump flow (Piston pump)		118.8 ± 2.5 L/min	VG46, 50 °C, 2200 rpm, P=Min.
	Max. input torque		105.1 ~ 108.0 N·m	at 2200 rpm
	Pilot pump flow		Mor than 8.0 L/min	VG46, 50 °C, 2200 rpm, P_0=4.12 MPa
	LS control pressure		1.45 ± 0.05 MPa	VG46, 50 °C, 2200 rpm, P_{LS}=9.8 MPa
	Proportional LS control pressure		1.45 ± 0.05 MPa (at 2200 rpm) 0.73 ± 0.1 MPa (at 1000 rpm)	VG46, 50 °C, P_{LS}=9.8 MPa

Piston pump power constant characteristics: KX161-3α, U45-3α

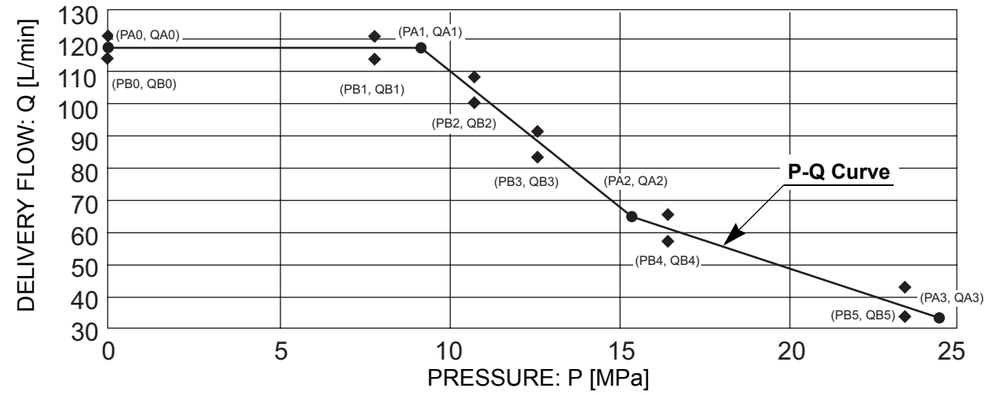

SHAFT SPEED 2200rpm				TOTAL INPUT TORQUE $108.0^{0}_{-2.9}$			
PRESSURE [MPa]		DELIVERY FLOW [L/min]		PRESSURE [MPa]		DELIVERY FLOW [L/min]	
PA0=	0.0	QA0=	118.8	PB0=	0.0	QB0=	118.8±2.5
PA1=	9.2	QA1=	117.8	PB1=	7.8	QB1=	117.2±2.5
PA2=	15.3	QA2=	66.0	PB2=	10.8	QB2=	104.1±4.0
PA3=	24.5	QA3=	33.5	PB3=	12.7	QB3=	87.0±4.0
				PB4=	16.6	QB4=	61.4±5.0
				PB5=	23.5	QB5=	37.0±5.0

Piston pump power constant characteristics: KX161-3S

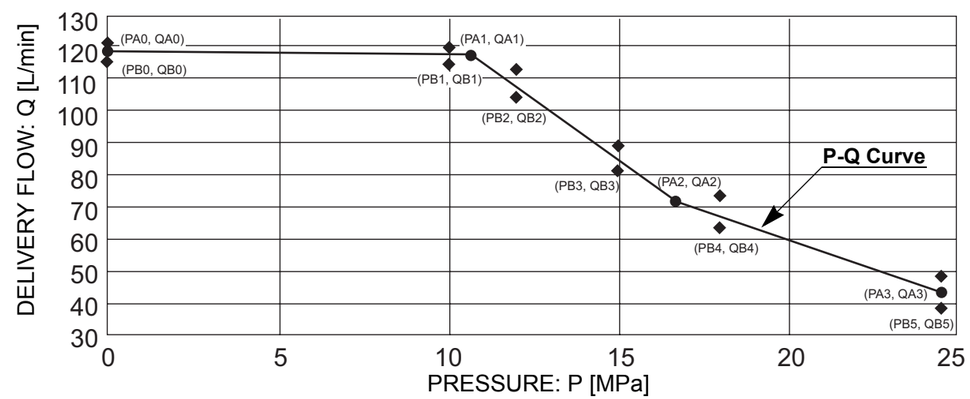

SHAFT SPEED 2200rpm				TOTAL INPUT TORQUE $108.0^{0}_{-2.9}$			
PRESSURE [MPa]		DELIVERY FLOW [L/min]		PRESSURE [MPa]		DELIVERY FLOW [L/min]	
PA0=	0.0	QA0=	118.8	PB0=	0.0	QB0=	118.8±2.5
PA1=	10.7	QA1=	117.3	PB1=	10.0	QB1=	117.3±2.5
PA2=	16.7	QA2=	72.0	PB2=	12.0	QB2=	109.0±4.0
PA3=	24.5	QA3=	43.8	PB3=	15.0	QB3=	85.5±4.0
				PB4=	18.0	QB4=	68.8±5.0
				PB5=	24.5	QB5=	43.8±5.0

https://truckmanualshub.com/

c. Control valve

1. PP-version (KX161-3S)

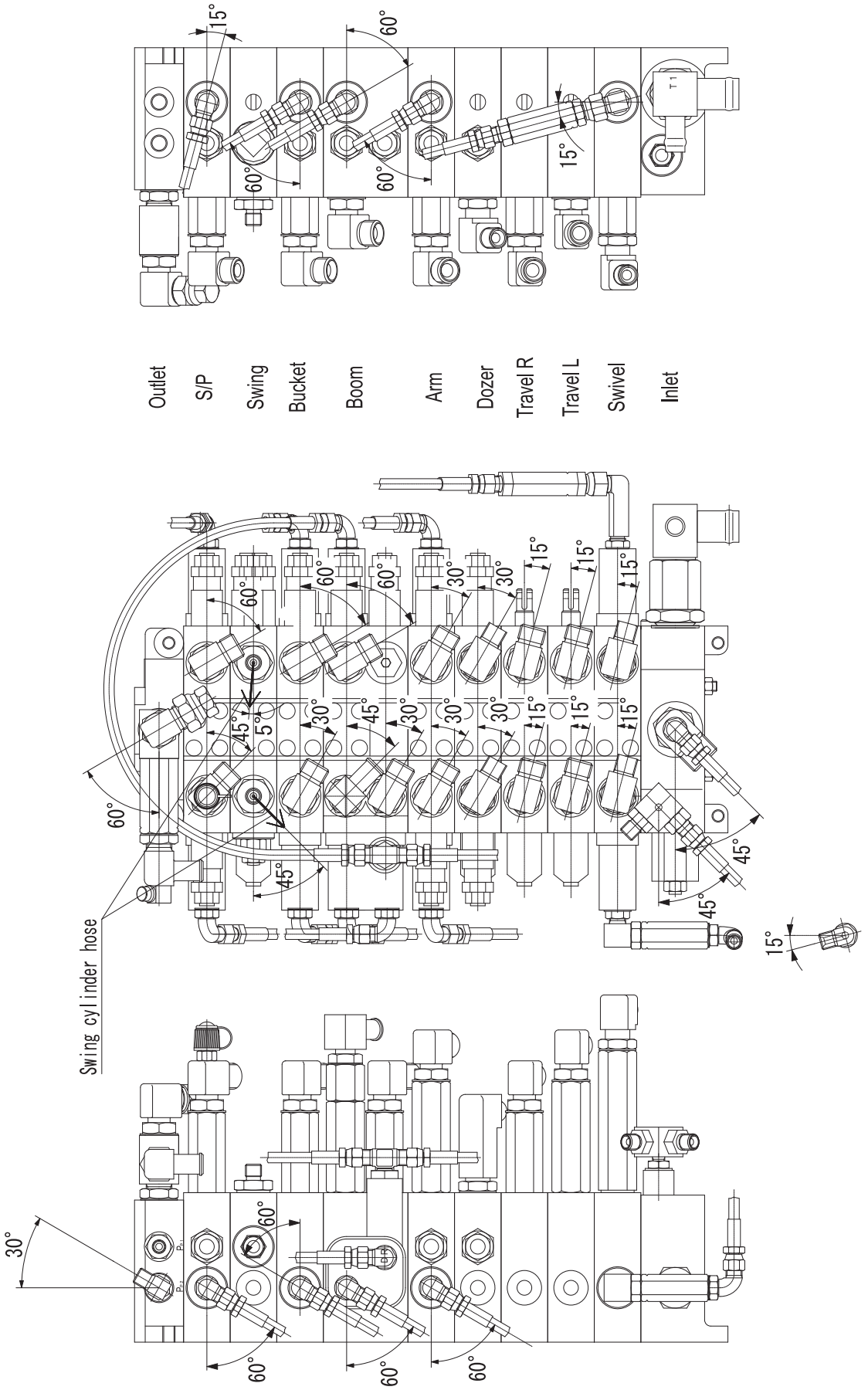

2. EU, KTA-version (KX161-3α·S)

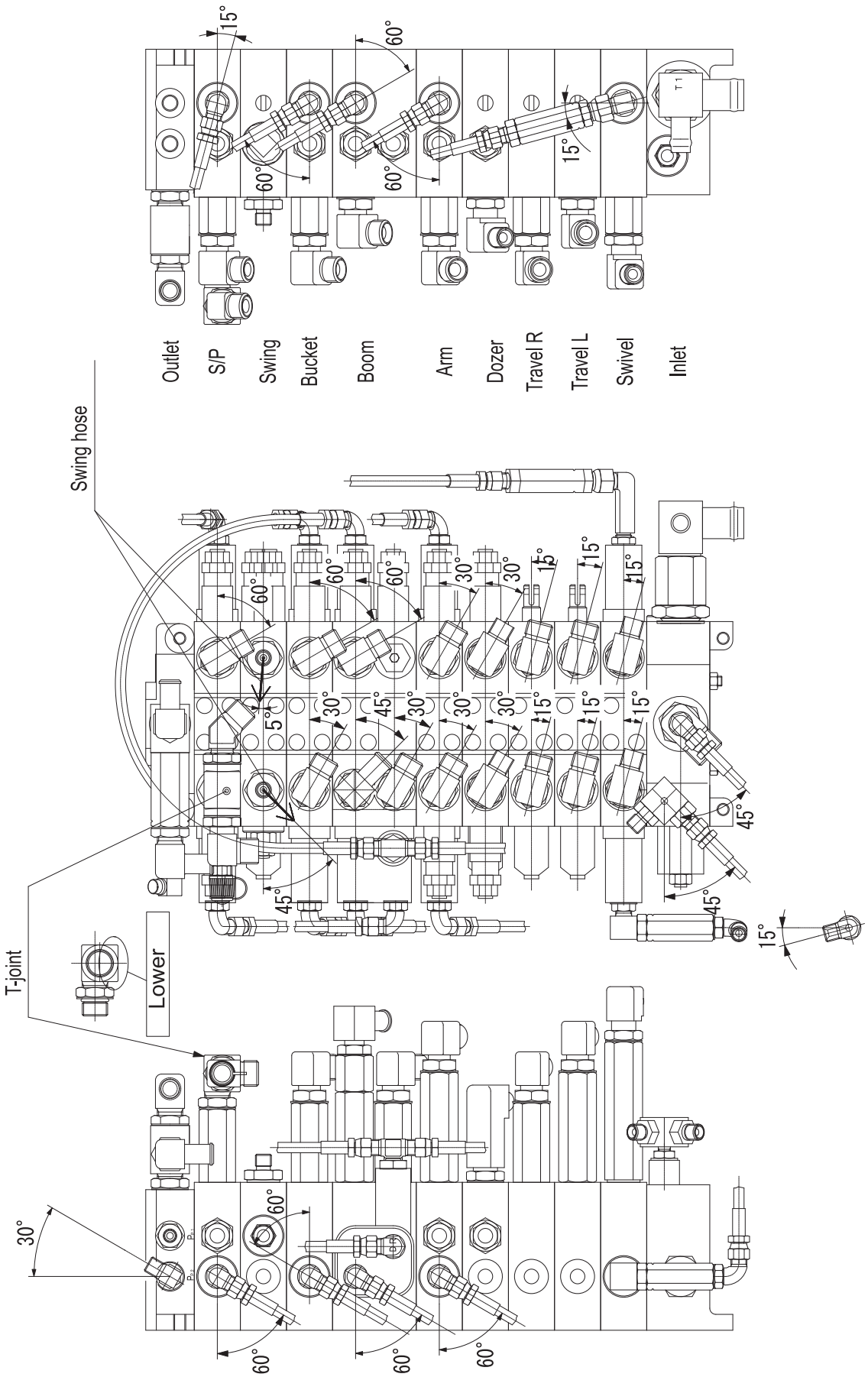

3. Third line-version: EU & KTA, KX161-3α·S

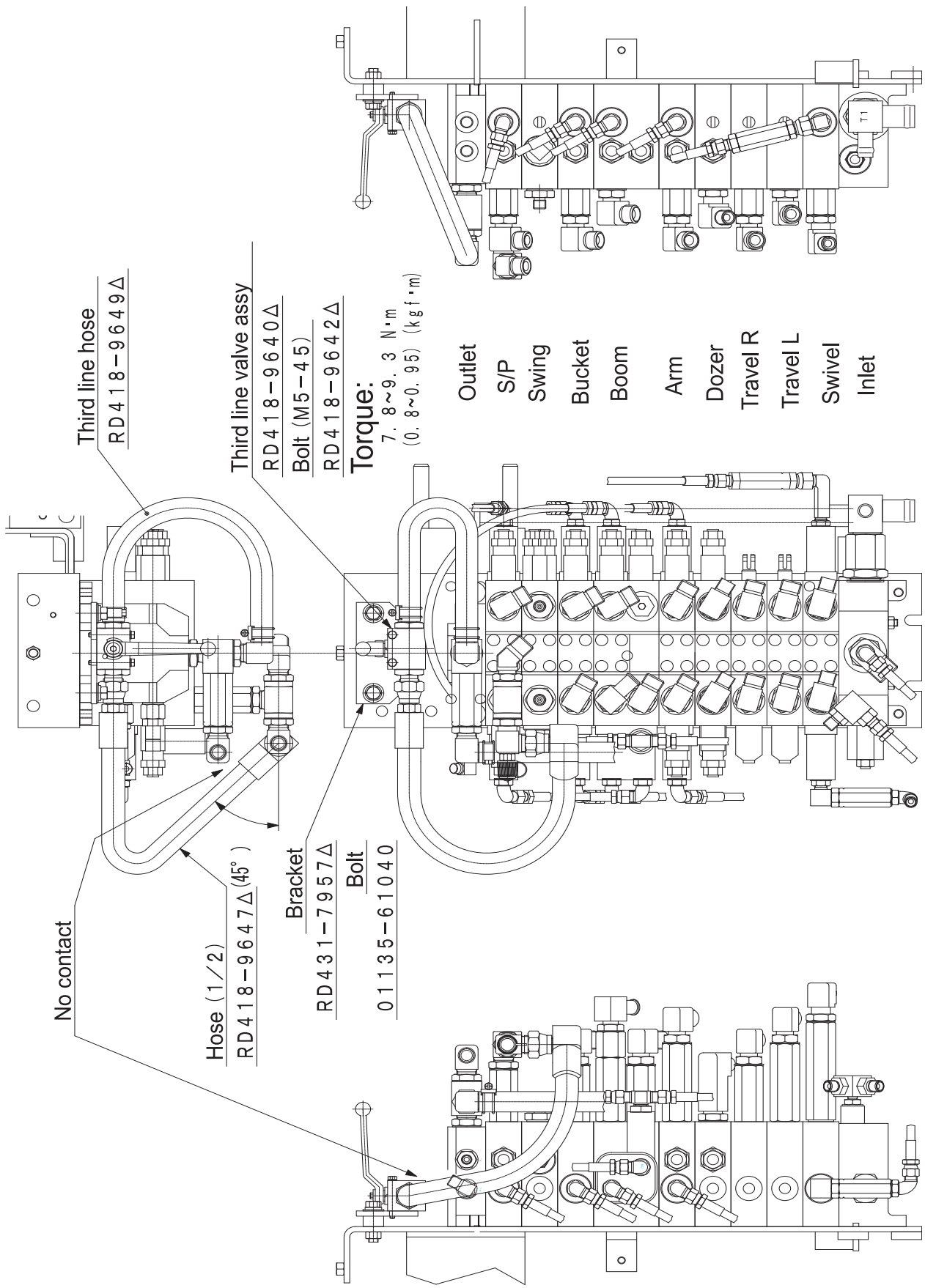

4. Inlet section; KX121-3S·α, 161-3S·α

(Before minor change)

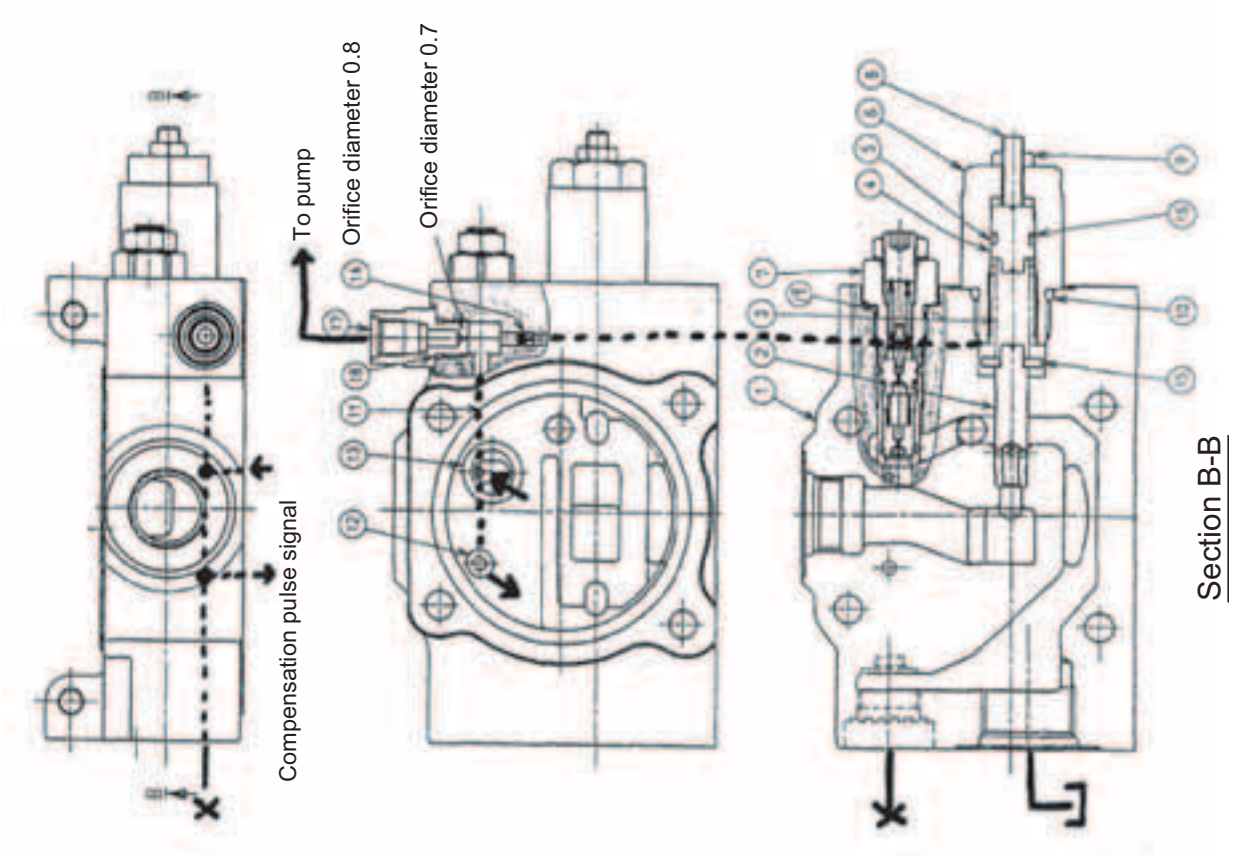

(After minor change

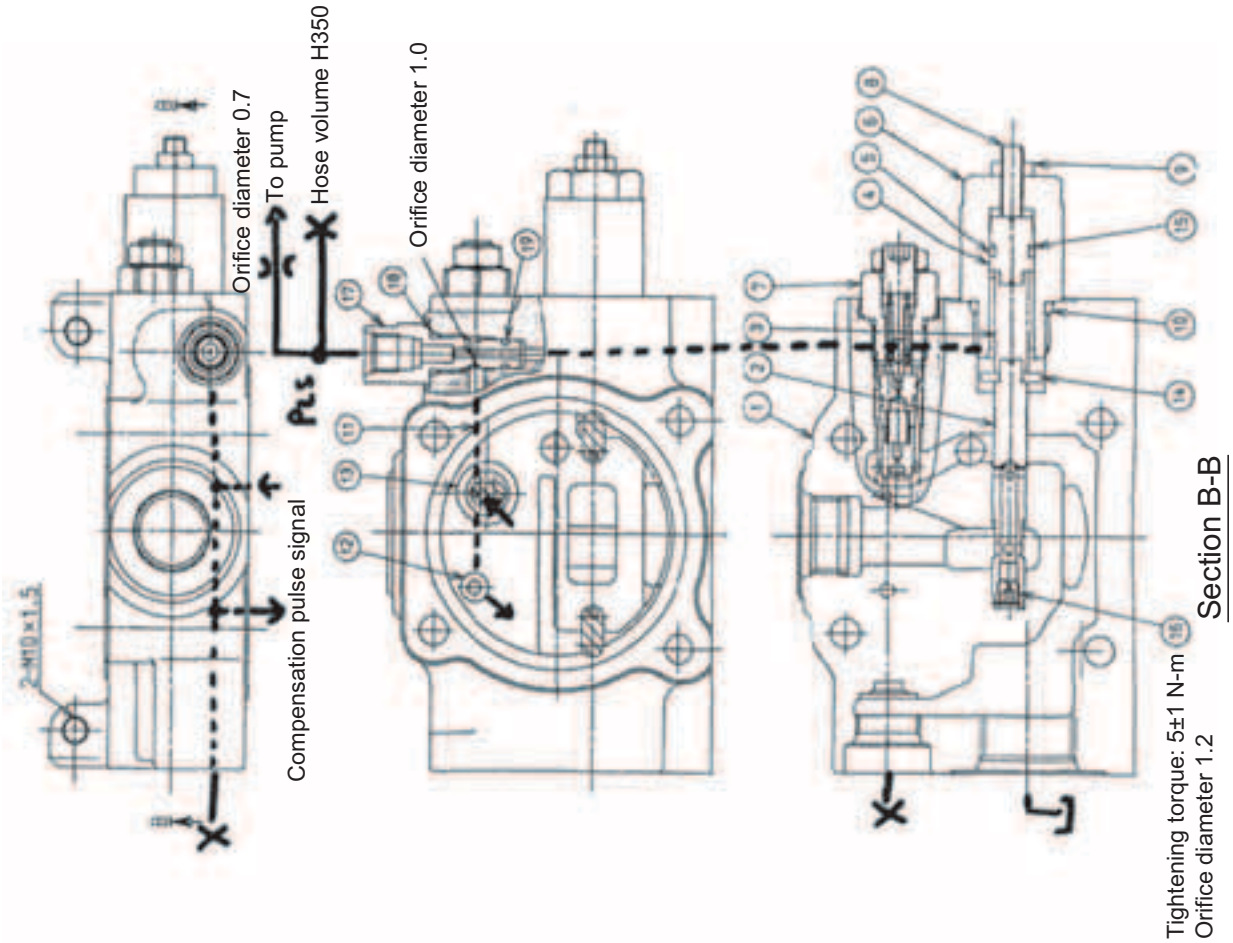

5. Other section, shuttle plate change

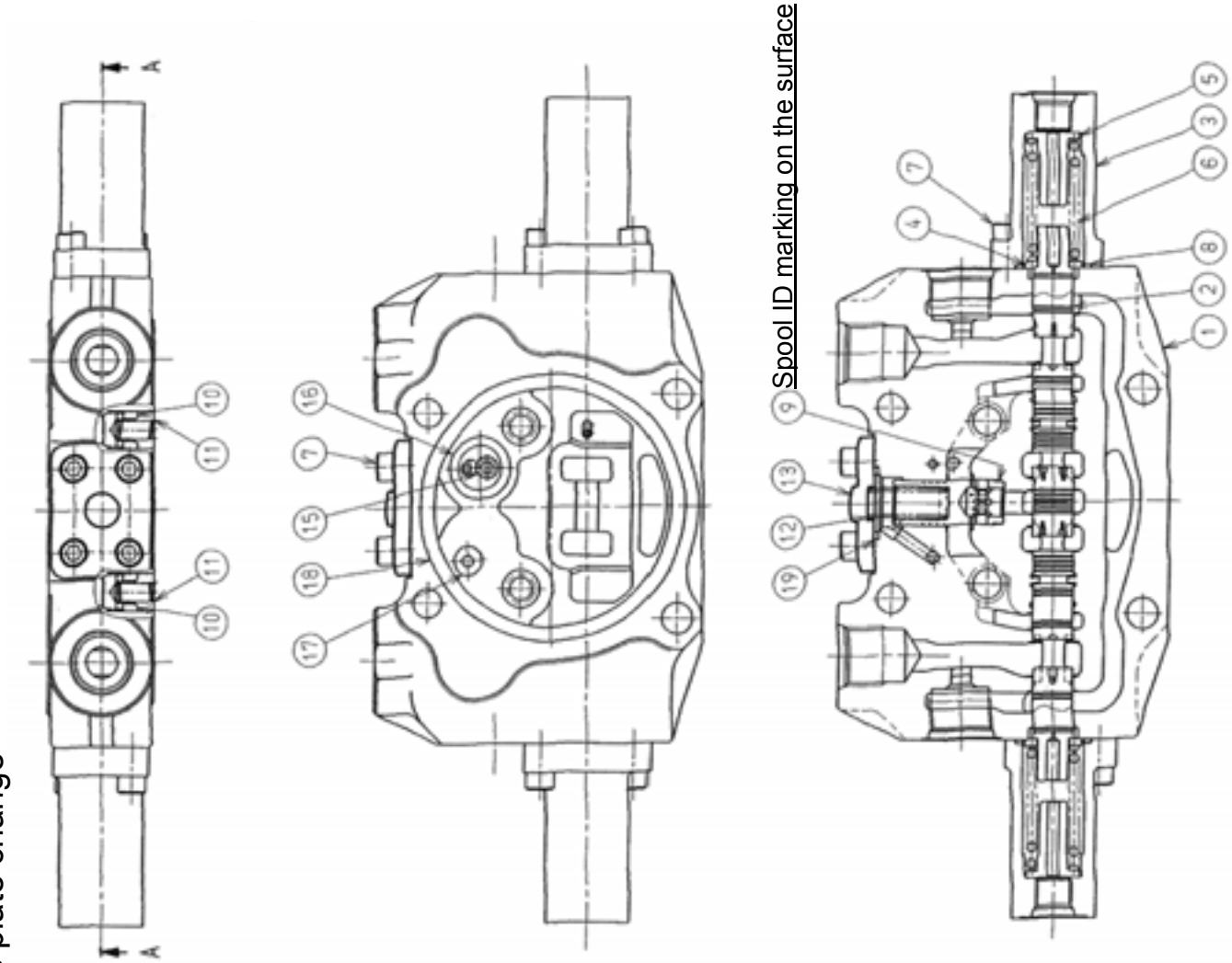

d. Accumulator

1. Structure and specifications: PP-version

PP-version has newly adopted the accumulator.

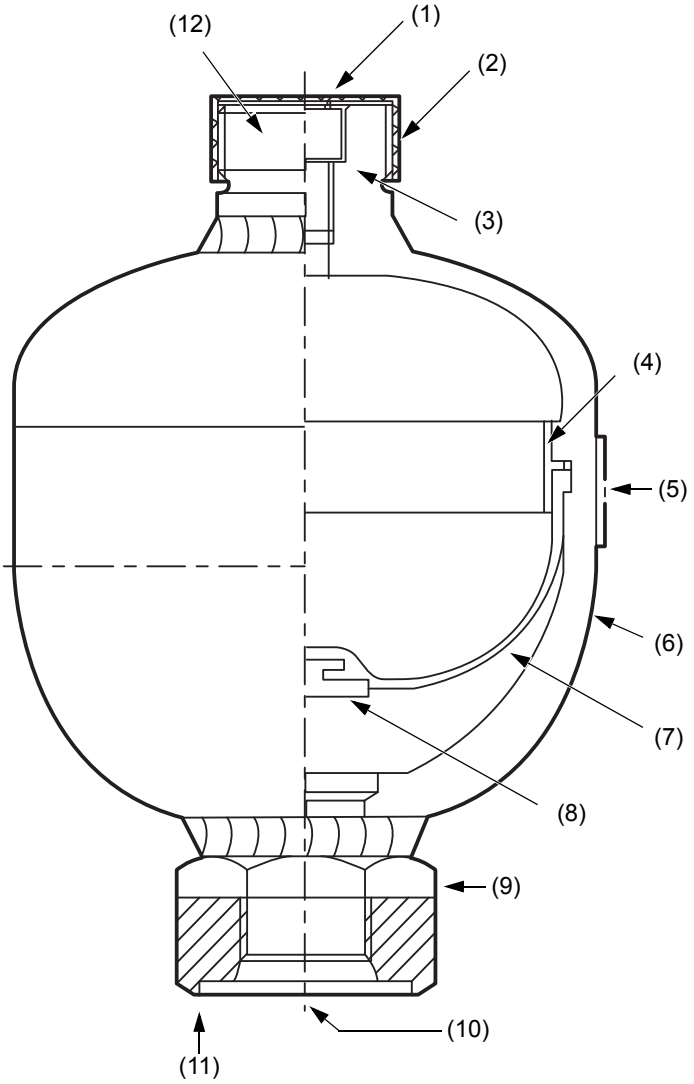

(1) Valve screw
(2) Protecting cop
(3) Seal ring
(4) Retainer
(5) Marking
(6) Shell
(7) Diaphragm
(8) Valve poppet
(9) Hex. screw 36
(10) Protecting plug
(11) Screw type: G 1/2
JIS B2351 Type 0
(12) The gas pressure po is variable with our charging and gouging set. Starting torque screw 20 Nm

1) Type code: SB0210-0.32E1/663U-210LH010
2) Manufacture: HYDAC GMBH
3) Specification

(1)	Volume	:	0.32 L (0.027 us gal)
(2)	Permissible max. working pressure	:	210 bar (214 kg·f/cm^2) 21 MPa(3047 psi)
(3)	Charge gas	:	Nitrogen (N_2 gas)
(4)	Charge pressure	:	10±1 bar (10.2±1 kg·f/cm^2) 1±0.1MPa(145±1.4 psi)
(5)	Media	:	Mineral oil
(6)	Allowable pressure ratio (Max. pressure / charging pressure)	:	Under 8 / 1 Example When charging pressure is set 10 bar, should set max. pressure under 80 bar for use.
(7)	Temperature of oil	:	-30 ° ~ +80 °C (-86 ° ~ +176 °F)
(8)	Weight	:	1.3 kg (2.87 lbs)
(9)	Surface treatment	:	Black primer

2. Change valve with accumulator: EU-version

2-1 Structure Maker: Hydro control

As for EU-version accumulator, structure and specifications almost all remains same as before.

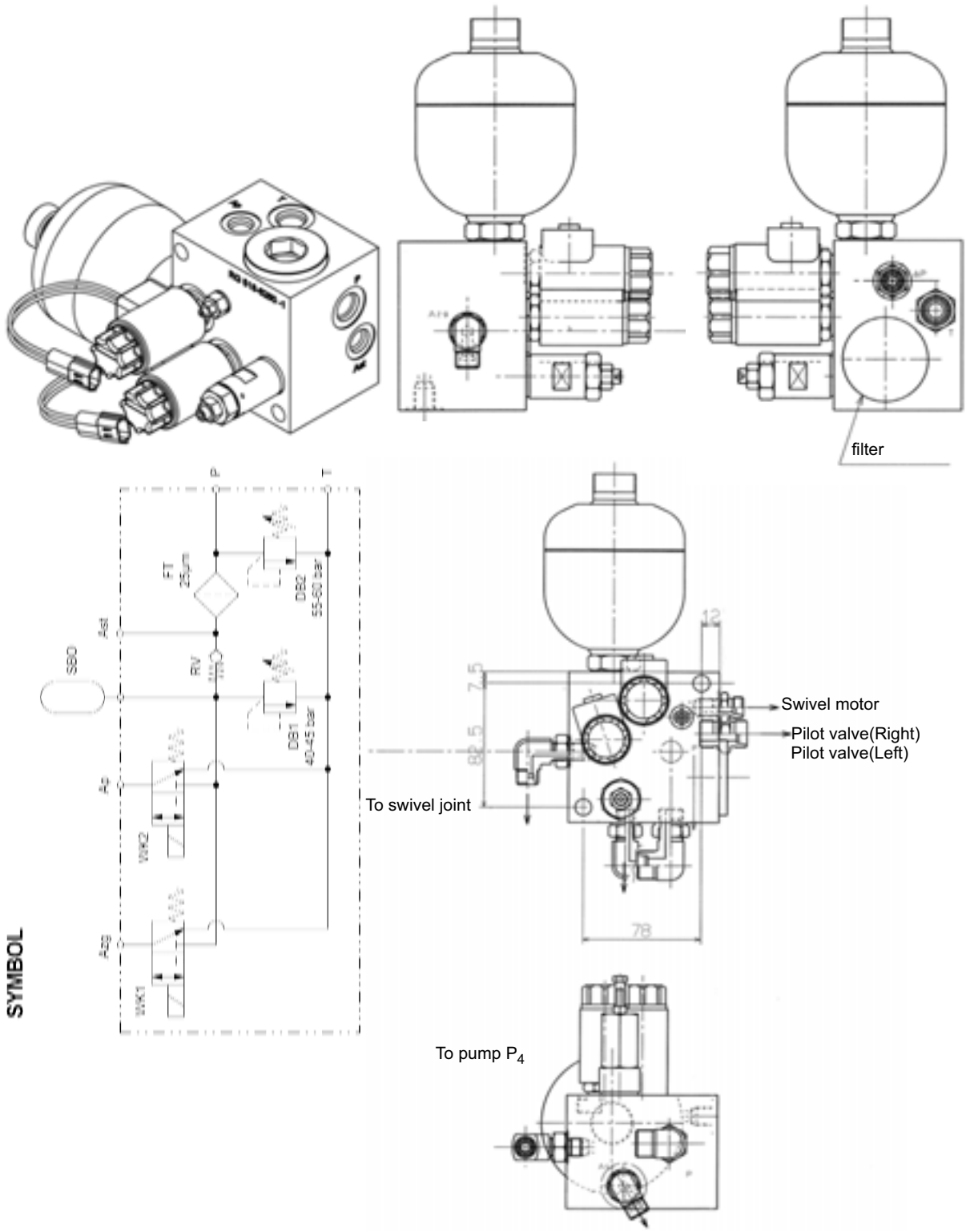

2-2 Specifications

1) Max. oil flow : 16 l/min (4.23 Us gal.)
2) Rated voltage and output : 12 V - 18W
3) Coil resistance : 8Ω

3. Accumulator installation: KX91-3S, U35S, U35-3S (KTA)

1) Bolt tightening torque
   48.1 ~ 55.9N·m (4.9 ~ 5.7kgf·m)

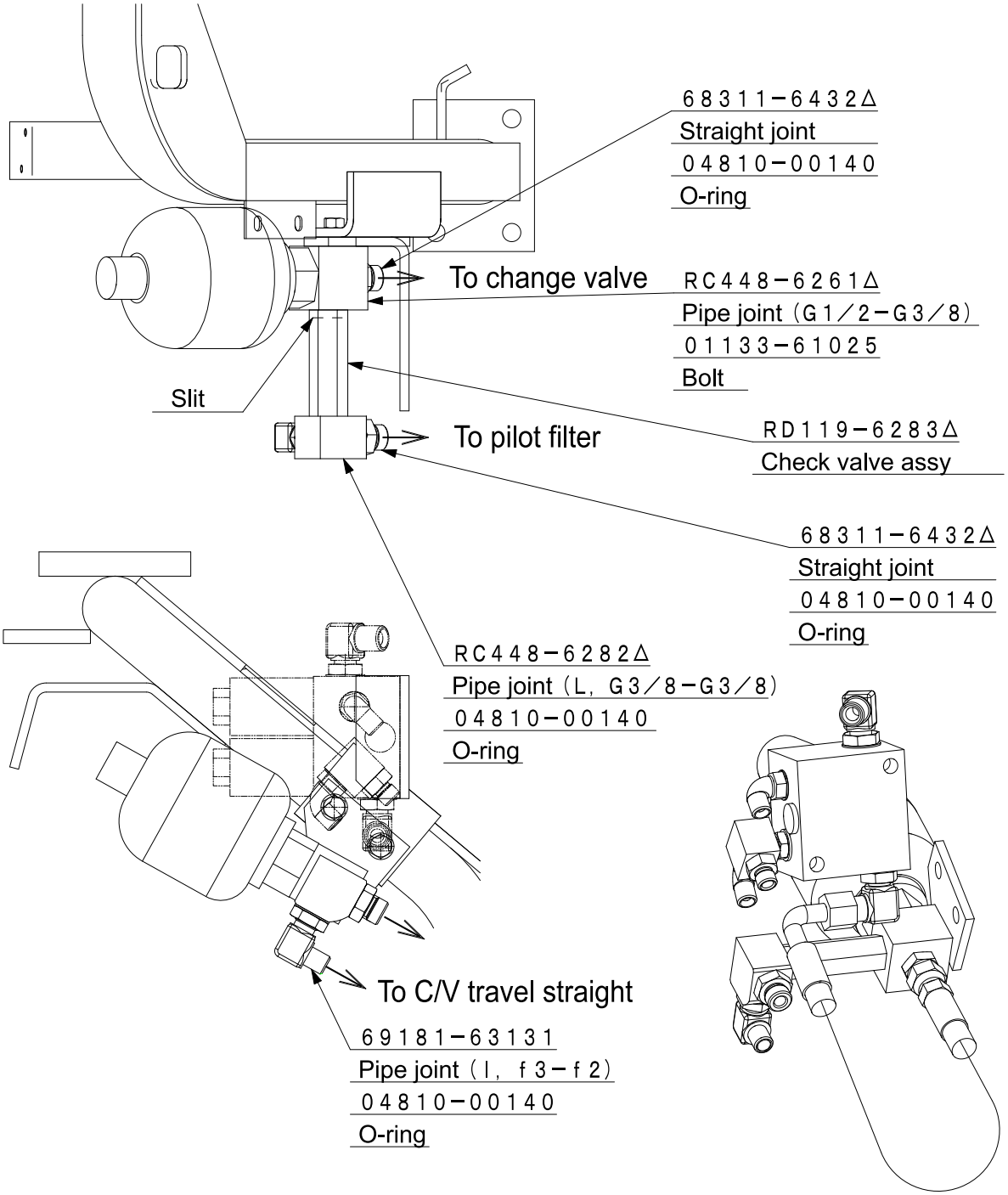

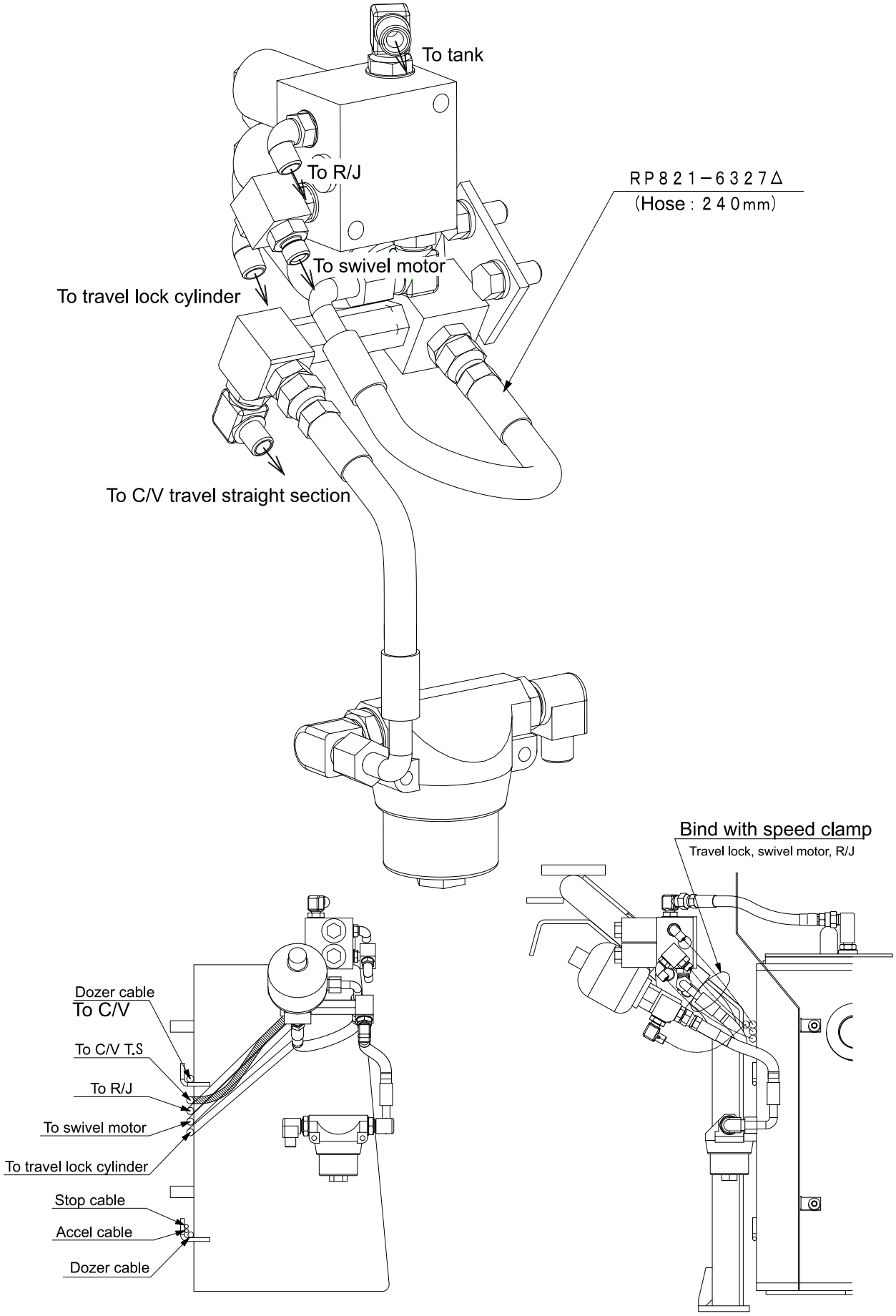
To tank
To R/J
RP821−6327Δ
(Hose : 240mm)
To swivel motor
To travel lock cylinder
To C/V travel straight section
Bind with speed clamp
Travel lock, swivel motor, R/J
Dozer cable
To C/V
To C/V T.S
To R/J
To swivel motor
To travel lock cylinder
Stop cable
Accel cable
Dozer cable

4. Accumulator installation: KX121-3S, 161-3S

1) Bolt tightening torque
   48.1 ~ 55.9N·m (4.9 ~ 5.7kgf·m)
2) Adapter G3/8 tightening torque
   37.2 ~ 42.1N·m (3.8 ~ 4.3kgf·m)

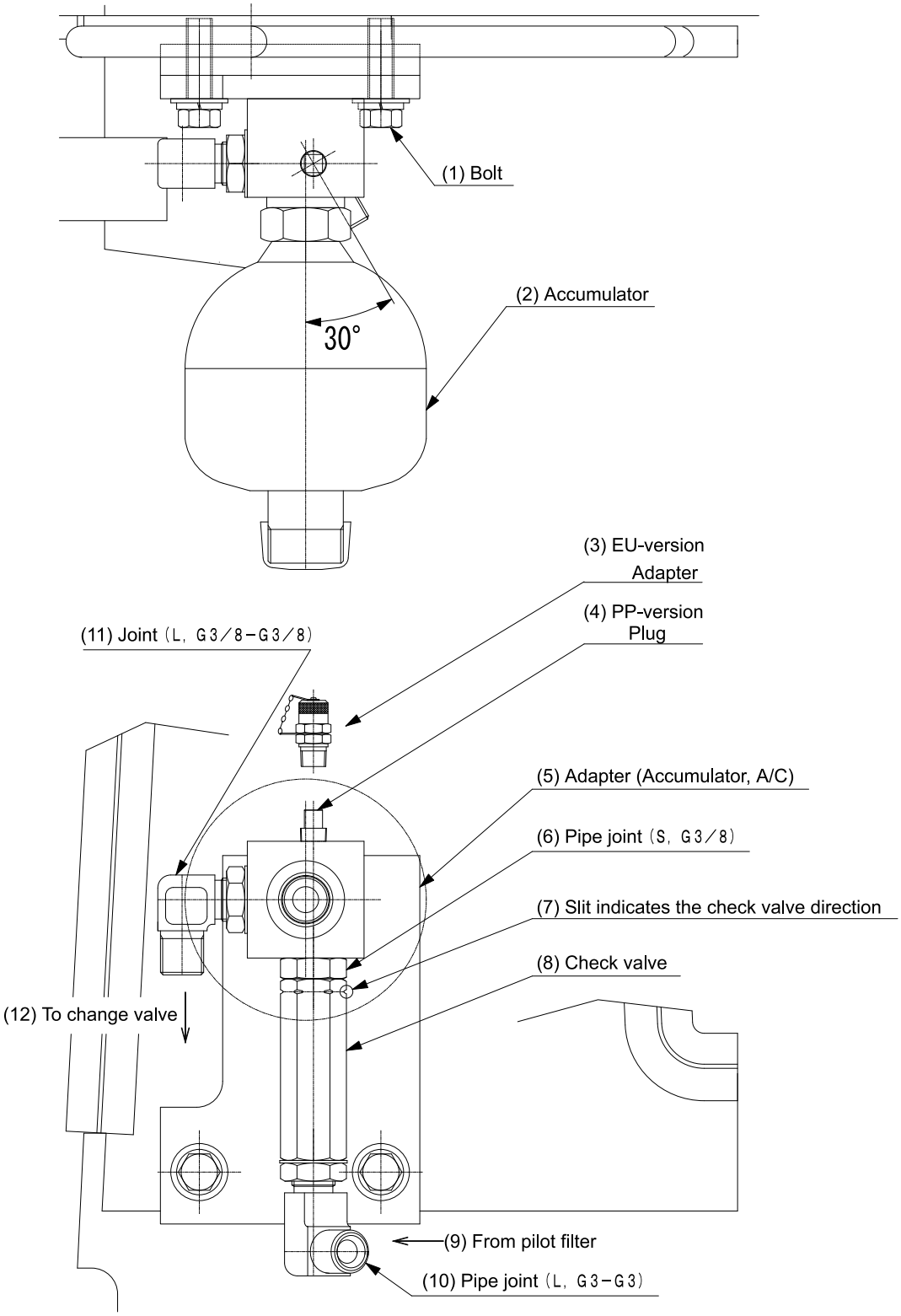

e. Hydraulic system line

1. Pilot control line: PP-version, KX161-3S

KX121-3S is almost same except control valve.

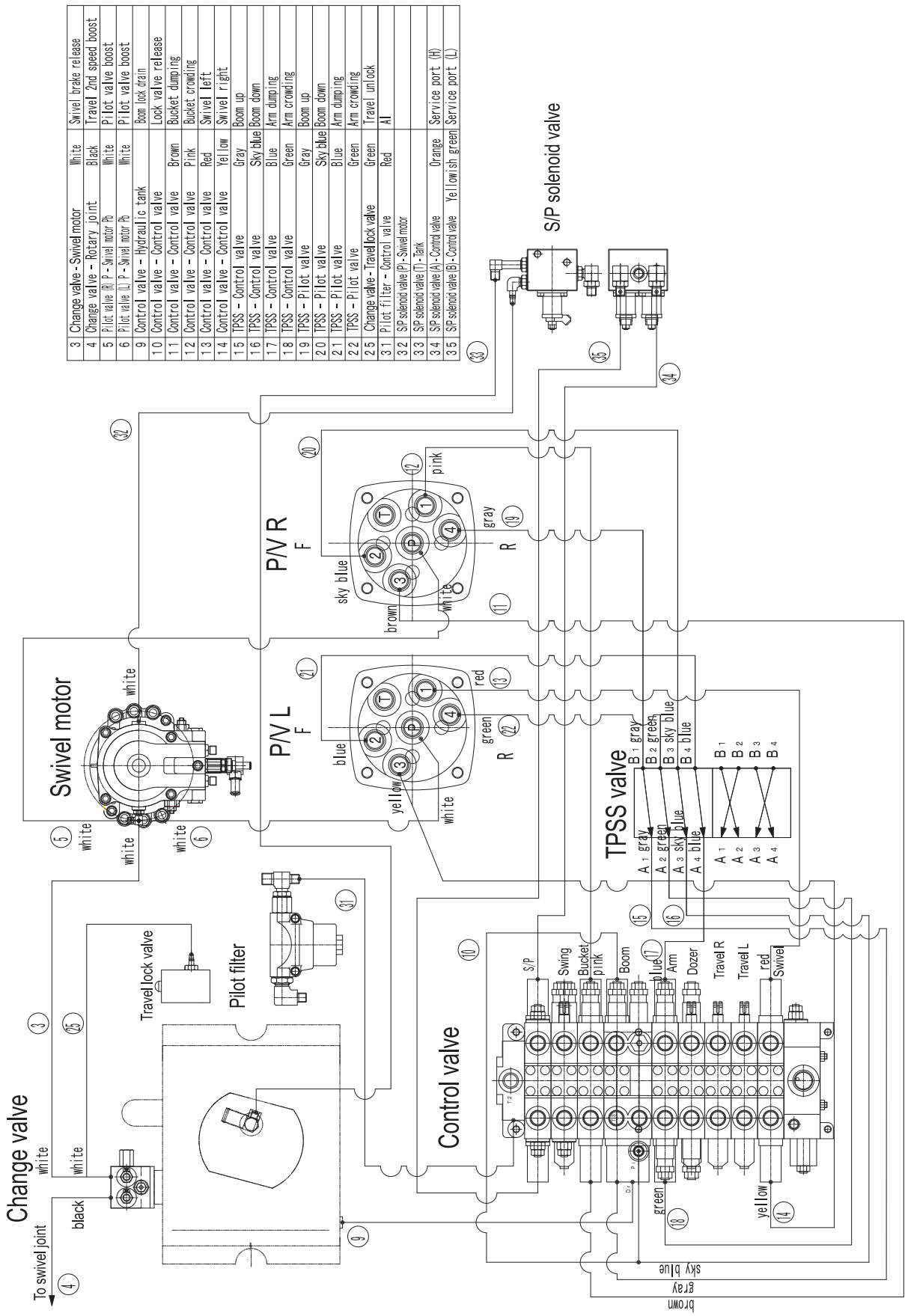

3	Change valve - Swivel motor	White	Swivel brake release
4	Change valve – Rotary joint	Black	Travel 2nd speed boost
5	Pilot valve (R) P - Swivel motor Pb	White	Pilot valve boost
6	Pilot valve (L) P - Swivel motor Pb	White	Pilot valve boost
9	Control valve – Hydraulic tank		Boom lock drain
10	Control valve – Control valve		Lock valve release
11	Control valve – Control valve	Brown	Bucket dumping
12	Control valve – Control valve	Pink	Bucket crowding
13	Control valve – Control valve	Red	Swivel left
14	Control valve – Control valve	Yellow	Swivel right
15	TPSS – Control valve	Gray	Boom up
16	TPSS – Control valve	Sky blue	Boom down
17	TPSS – Control valve	Blue	Arm dumping
18	TPSS – Control valve	Green	Arm crowding
19	TPSS – Pilot valve	Gray	Boom up
20	TPSS – Pilot valve	Sky blue	Boom down
21	TPSS – Pilot valve	Blue	Arm dumping
22	TPSS – Pilot valve	Green	Arm crowding
25	Change valve – Travel lock valve	Green	Travel unlock
31	Pilot filter – Control valve	Red	All
32	S/P solenoid valve (P) - Swivel motor		
33	S/P solenoid valve (T) - Tank		
34	S/P solenoid valve (A) - Control valve	Orange	Service port (H)
35	S/P solenoid valve (B) - Control valve	Yellowish green	Service port (L)

2. Pilot control line: EU-version, KX161-3α

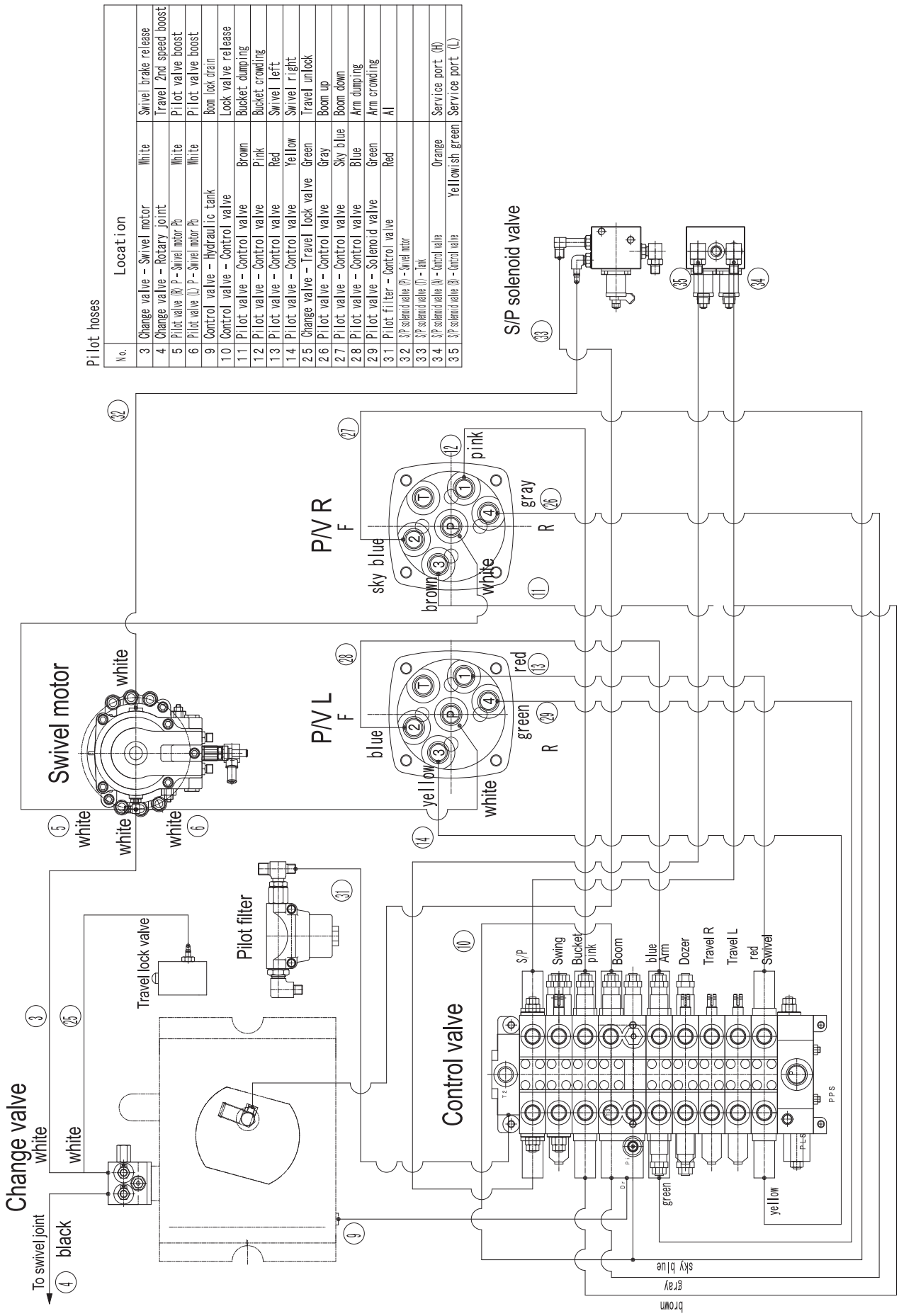

Pilot hoses

No.	Location		
3	Change valve – Swivel motor	White	Swivel brake release
4	Change valve – Rotary joint		Travel 2nd speed boost
5	Pilot valve (R) P – Swivel motor Pb	White	Pilot valve boost
6	Pilot valve (L) P – Swivel motor Pb	White	Pilot valve boost
9	Control valve – Hydraulic tank		Boom lock drain
10	Control valve – Control valve		Lock valve release
11	Pilot valve – Control valve	Brown	Bucket dumping
12	Pilot valve – Control valve	Pink	Bucket crowding
13	Pilot valve – Control valve	Red	Swivel left
14	Pilot valve – Control valve	Yellow	Swivel right
25	Change valve – Travel lock valve	Green	Travel unlock
26	Pilot valve – Control valve	Gray	Boom up
27	Pilot valve – Control valve	Sky blue	Boom down
28	Pilot valve – Control valve	Blue	Arm dumping
29	Pilot valve – Solenoid valve	Green	Arm crowding
31	Pilot filter – Control valve	Red	All
32	S/P solenoid valve (P) - Swivel motor		
33	S/P solenoid valve (T) - Tank		
34	S/P solenoid valve (A) - Control valve	Orange	Service port (H)
35	S/P solenoid valve (B) - Control valve	Yellowish green	Service port (L)

3. Pilot delivery line: KX161-3S

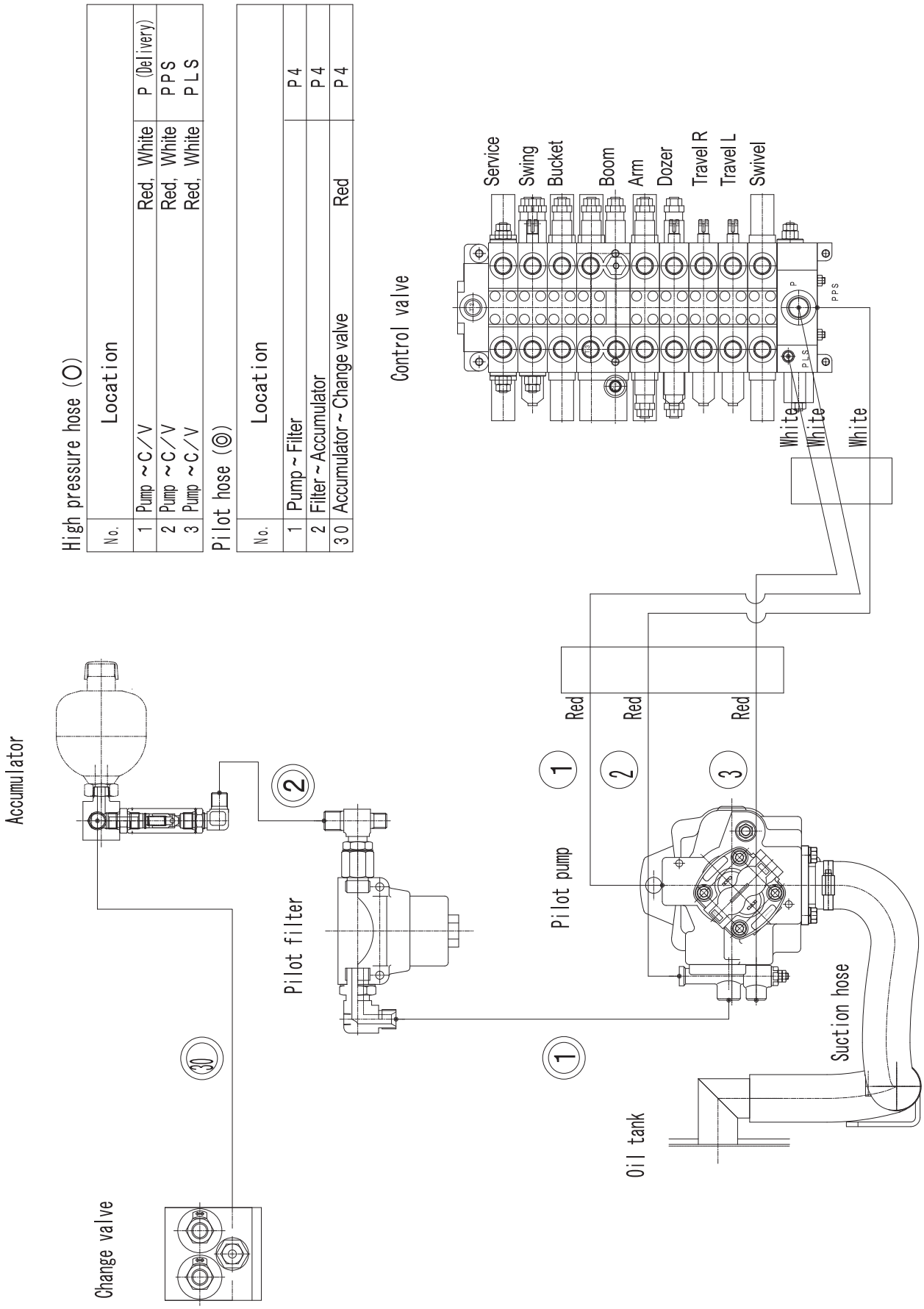

4. Pilot filter

Kubota Japan make is almost same among KX91-3S to KX161-3S

(1) Bolt tightening torque: 9.8 ~ 11.3 N·m (1.0 ~ 1.15 kgf·m)
(2) Adapter tightening torque: G3/8 37.2 ~ 42.1 N·m (3.8 ~ 4.3 kgf·m)
G1/2 58.8 ~ 63.7 N·m (6.0 ~ 6.5 kgf·m)

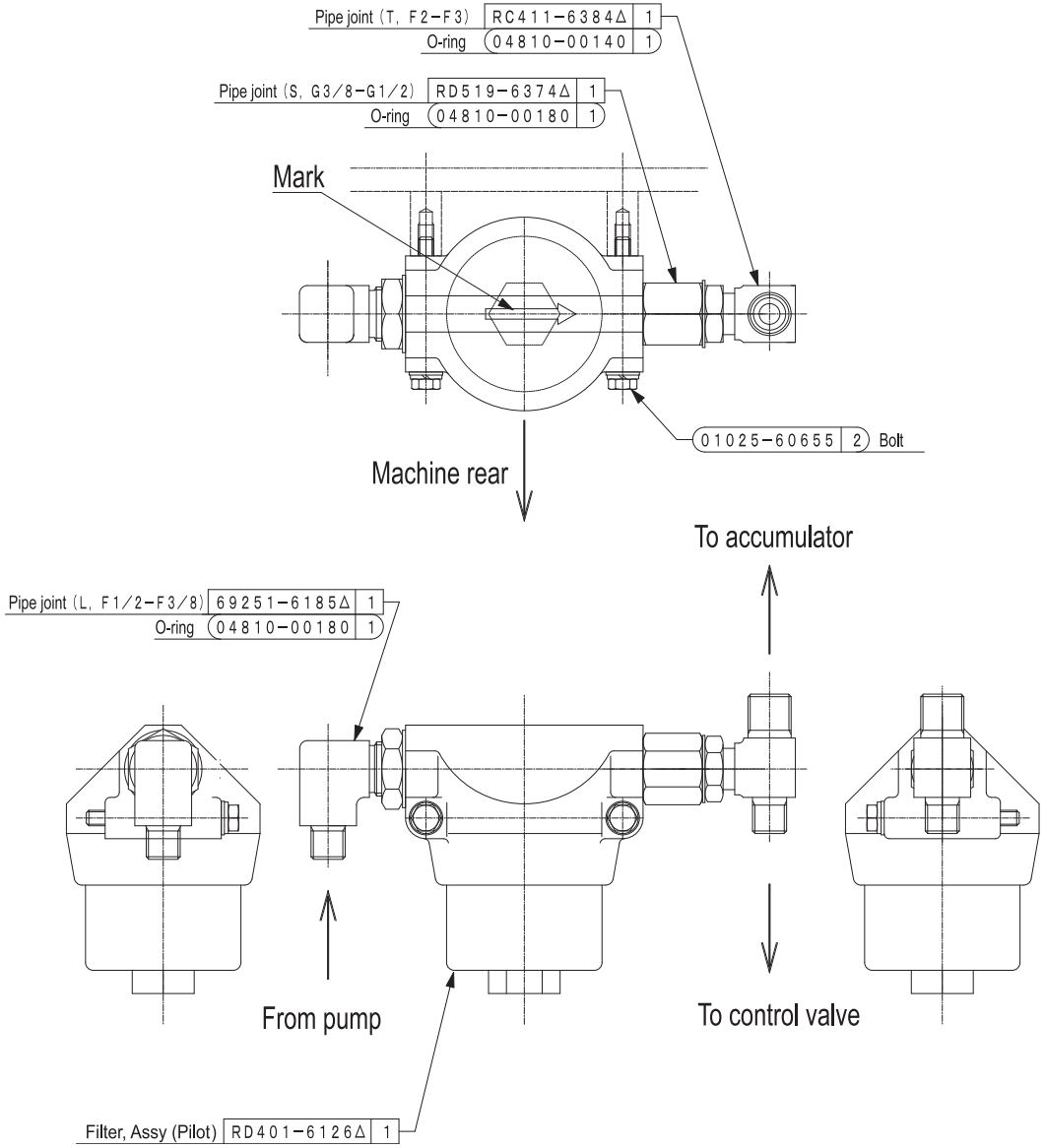

5. Pilot control line: KX91-3S, U35S, U35-3S (KTA)

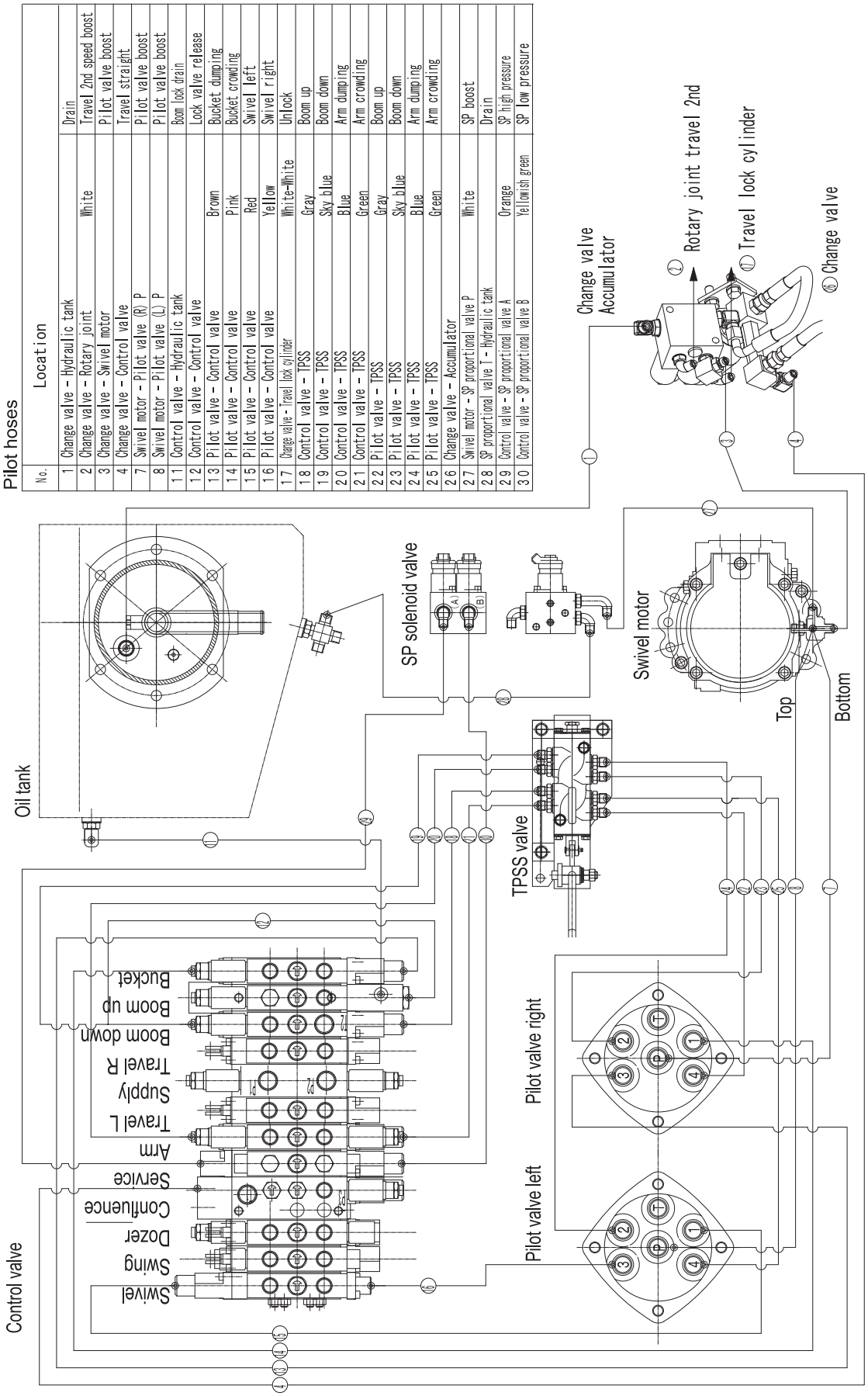

Pilot hoses

No.	Location		Drain
1	Change valve – Hydraulic tank		Drain
2	Change valve – Rotary joint	White	Travel 2nd speed boost
3	Change valve – Swivel motor		Pilot valve boost
4	Change valve – Control valve		Travel straight
7	Swivel motor – Pilot valve (R) P		Pilot valve boost
8	Swivel motor – Pilot valve (L) P		Pilot valve boost
11	Control valve – Hydraulic tank		Boom lock drain
12	Control valve – Control valve		Lock valve release
13	Pilot valve – Control valve	Brown	Bucket dumping
14	Pilot valve – Control valve	Pink	Bucket crowding
15	Pilot valve – Control valve	Red	Swivel left
16	Pilot valve – Control valve	Yellow	Swivel right
17	Change valve – Travel lock cylinder	White-White	Unlock
18	Control valve – TPSS	Gray	Boom up
19	Control valve – TPSS	Sky blue	Boom down
20	Control valve – TPSS	Blue	Arm dumping
21	Control valve – TPSS	Green	Arm crowding
22	Pilot valve – TPSS	Gray	Boom up
23	Pilot valve – TPSS	Sky blue	Boom down
24	Pilot valve – TPSS	Blue	Arm dumping
25	Pilot valve – TPSS	Green	Arm crowding
26	Change valve – Accumulator		
27	Swivel motor – SP proportional valve P	White	SP boost
28	SP proportional valve T – Hydraulic tank		Drain
29	Control valve – SP proportional valve A	Orange	SP high pressure
30	Control valve – SP proportional valve B	Yellowish green	SP low pressure

6. Delivery hose: KX91-3S, U35S, U35-3S (KTA)

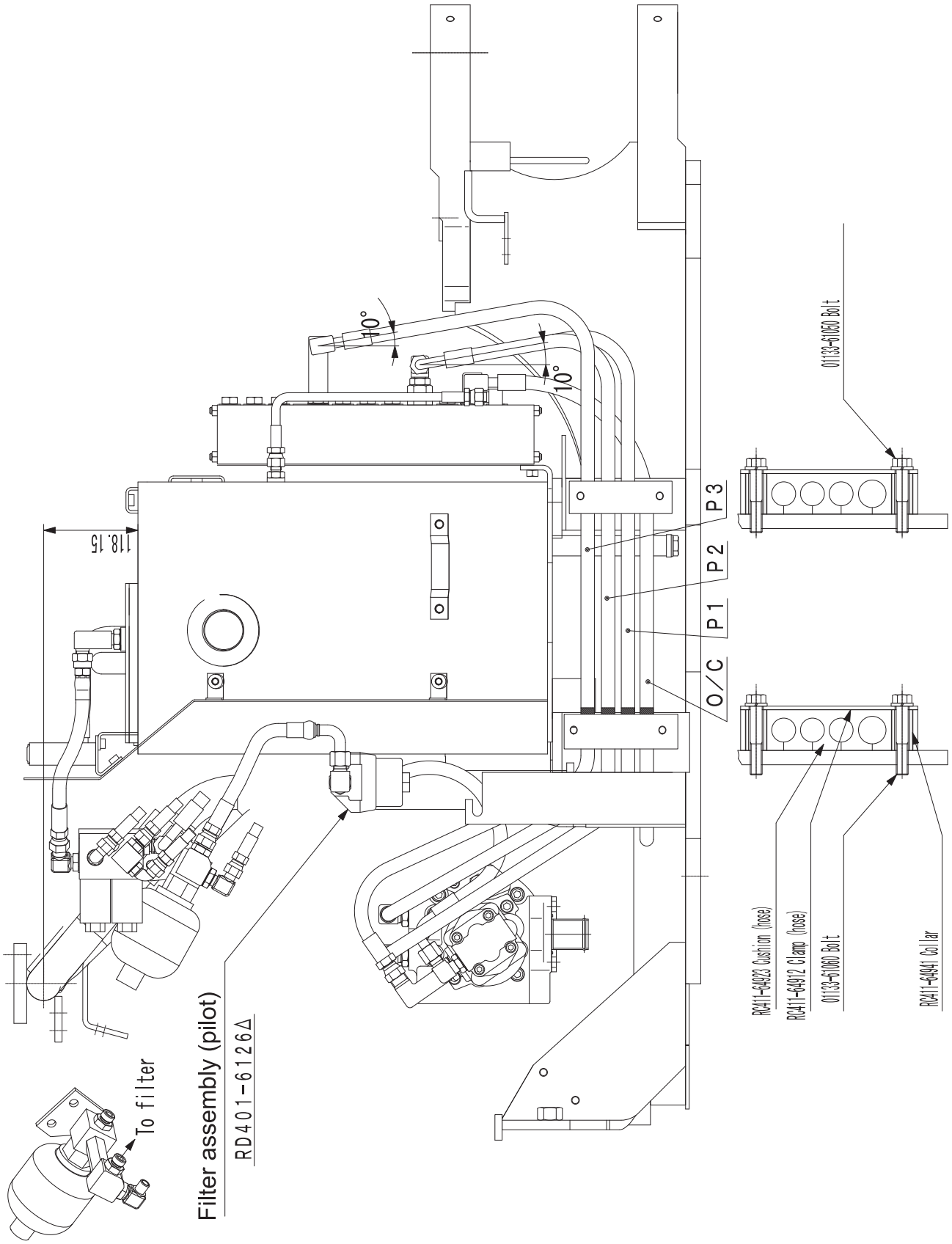

High-pressure hoses

1	Pump ~ C/V	P1	RC441-6441Δ	1
2	Pump ~ C/V	P2	RC441-6442Δ	1
3	Pump ~ C/V	P3	RC441-6443Δ	1

Pilot hose

4	Pump ~ Line filter	P4	RC441-6255Δ	1
5	Line filter ~ Check valve	P4	RC441-6255Δ	1

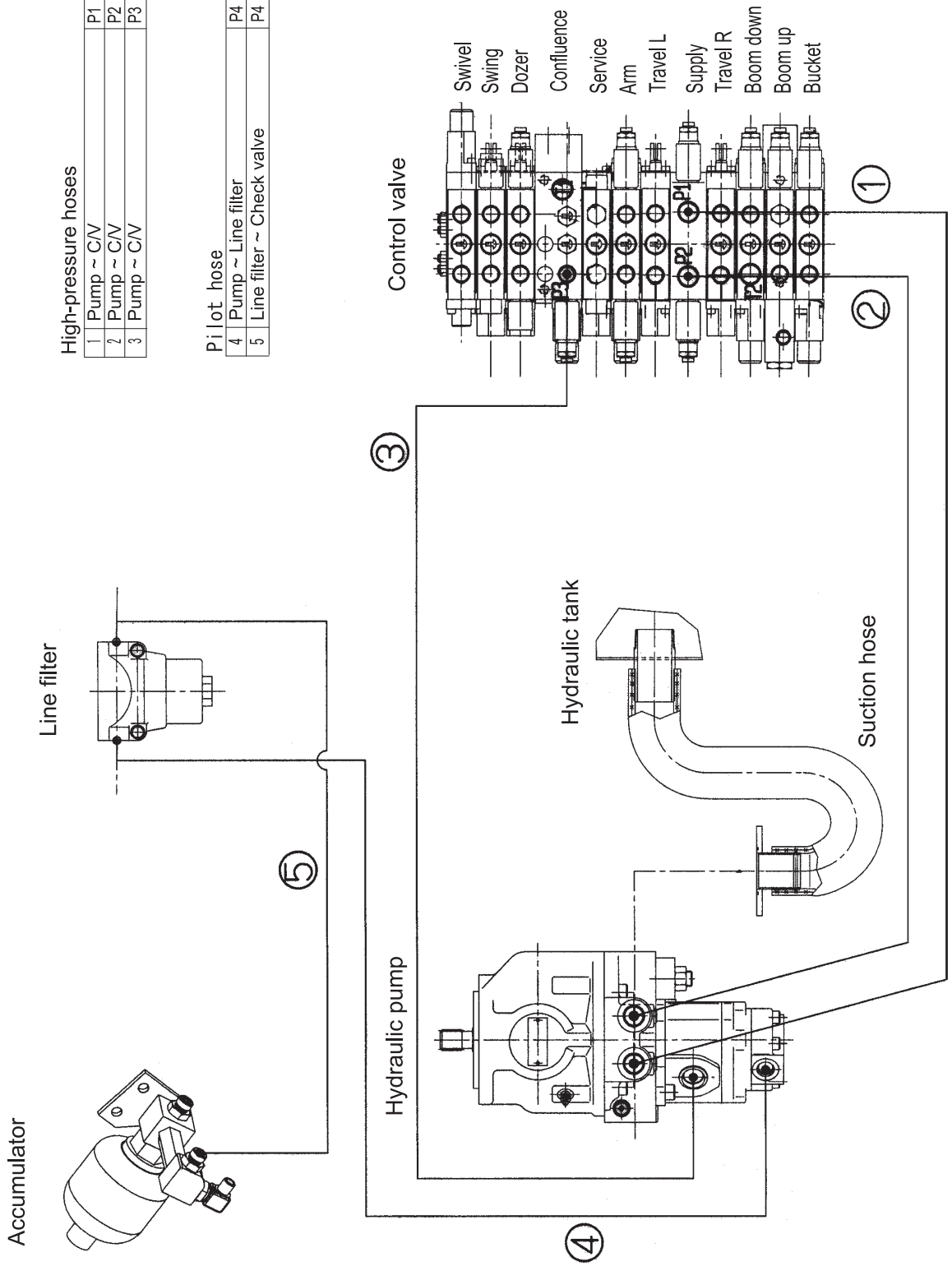

7. Rotary joint hoses: KX91-3S, U35S, U35-3S (KTA)

High-pressure hoses

16	Control valve - Rotary joint	Blue	Travel left forward	RC441-6441Δ	1
17	Control valve - Rotary joint	Red	Travel left backward	RC441-6442Δ	1
18	Control valve - Rotary joint	Green	Travel right forward	RC441-6443Δ	1
19	Control valve - Rotary joint	Yellow	Travel right backward	RC441-6444Δ	1
20	Control valve - Swivel motor	Gray	Swivel left	RC441-6451Δ	1
21	Control valve - Swivel motor	Sky blue	Swivel right	RC441-6452Δ	1
22	Control valve - Swing cylinder	Yellowish green	Swing left	RC441-6461Δ	1
23	Control valve - Swing cylinder	Orange	Swing right	RC441-6462Δ	1
24	Control valve - Rotary joint	Pink	Dozer up	RC441-6471Δ	1
25	Control valve - Rotary joint	Brown	Dozer down	RC441-6472Δ	1

Pilot hose

1	Change valve - Rotary valve	White	Travel 2nd speed boost	RC441-6255Δ	1

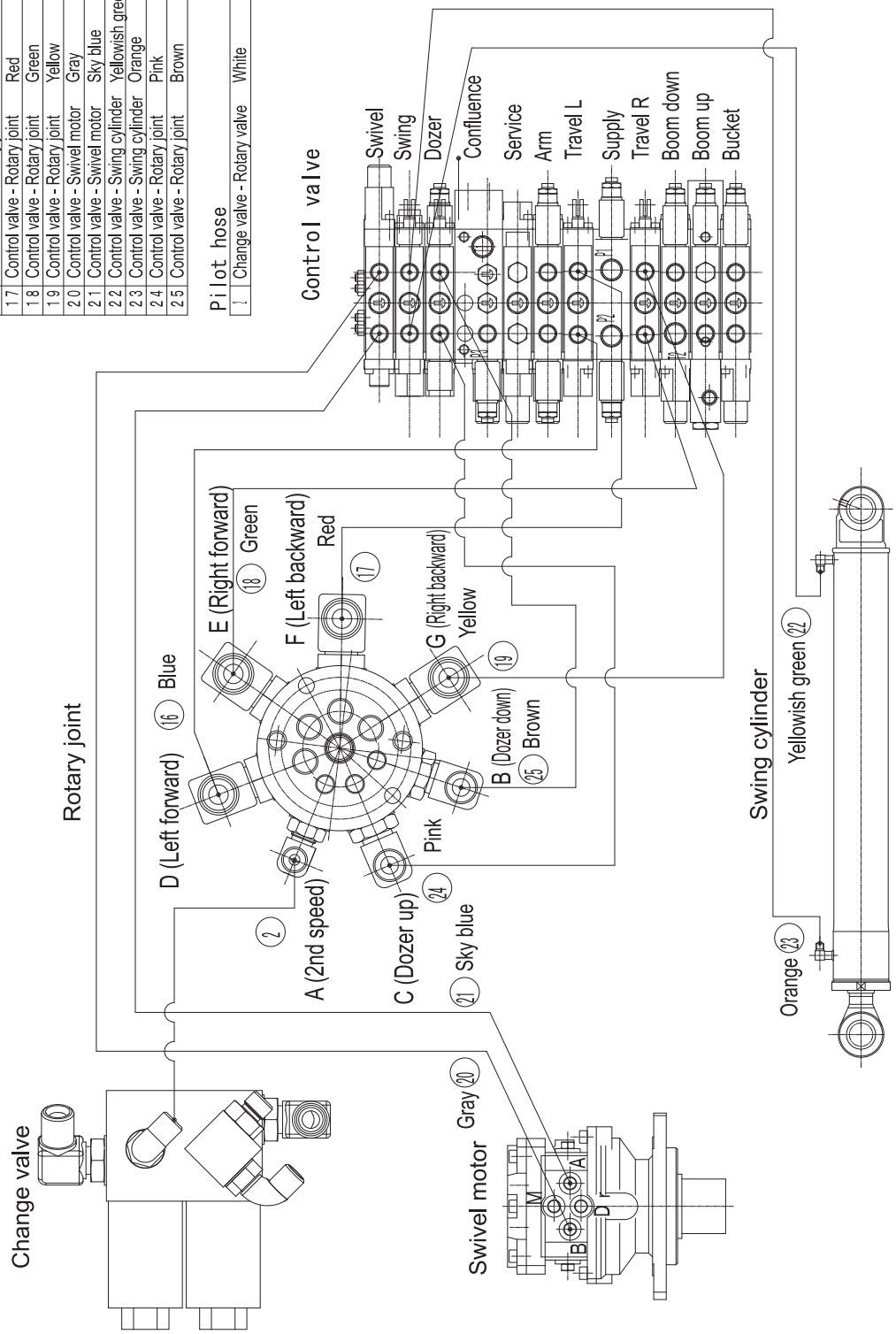

8. Change valve

(1) Adapter tightening torque

G1/4 Pipe joint (L, G1/4-G1/4) (RC601-6372△)	24.5 ~ 29.4 N·m (2.5 ~ 3.0 kgf·m)
G3/8 Pipe joint (L, G3/8 - G3/8) (RP201-6181△) Pipe joint (T, F2 - F3) (RC411-6384△)	49.1 ~ 53.9 N·m (5.0 ~ 5.5 kgf·m)

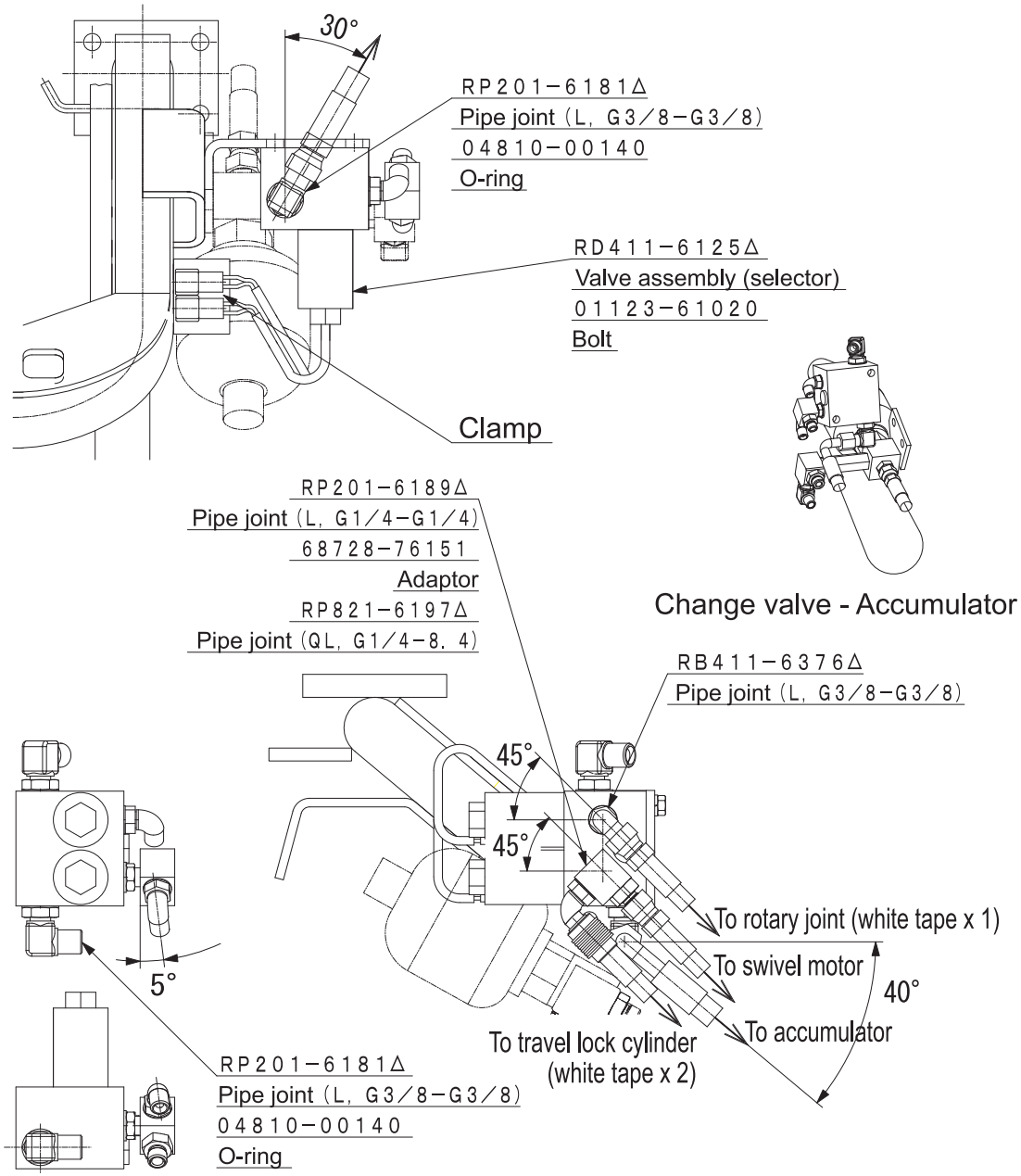

f. Service port (S/P) solenoid valve

1. S/P valve

Adapter tightening torqueG1/4:25.0 ~ 30.0 N·m (2.5 ~ 3.0 kgf·m)

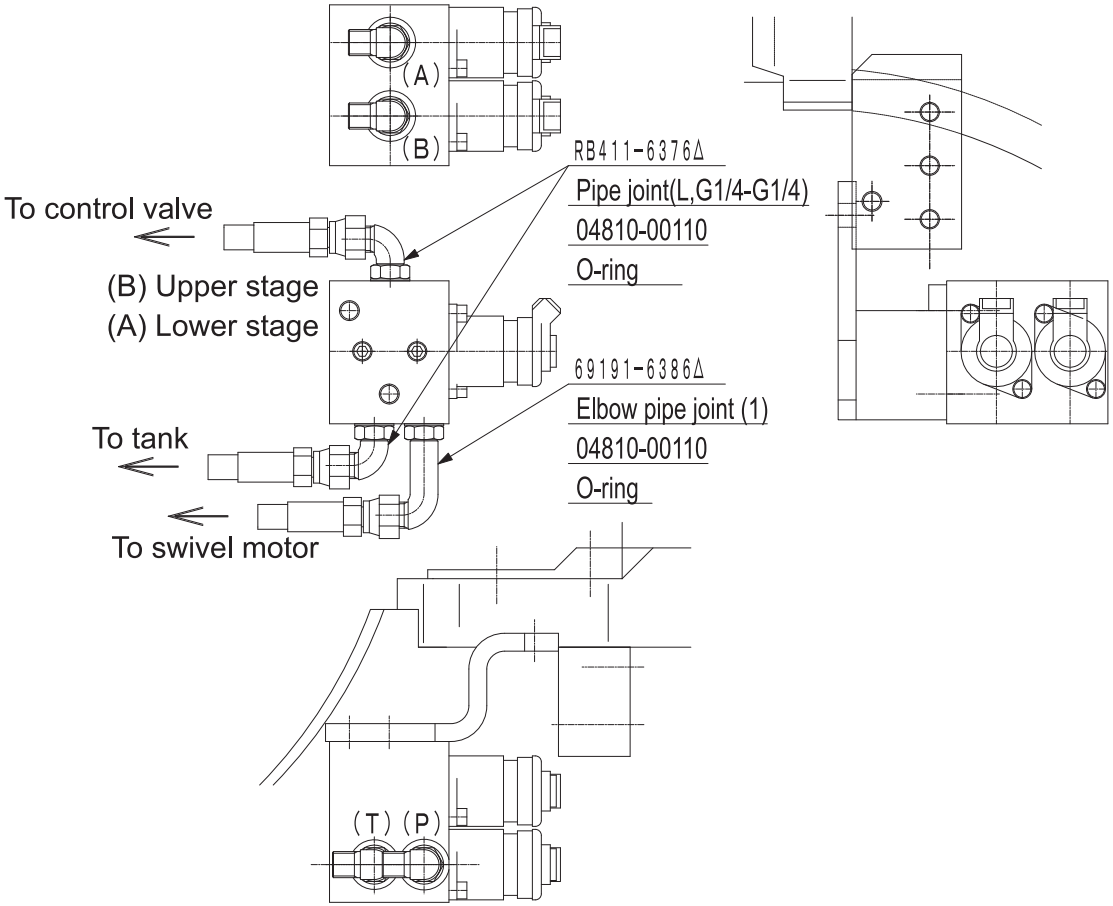

1	RC448−6288Δ	SP proportional valve A - Control valve S/P (high pressure)
2	RC448−6289Δ	SP proportional valve B - Control valve S/P (low pressure)
3	RC441−6287Δ	SP proportional valve T - Hydraulic tank
4	RC448−6286Δ	SP proportional valve P - Swivel motor S/P proportional valve boost

2. S/P valve

1	RD138−62888	SP solenoid valve (A) - Control valve Service port (H)
2	RD138−62889	SP solenoid valve (B) - Control valve Service port (L)
3	RD138−62887	SP solenoid valve (T) - Hydraulic tank
4	RD138−62886	SP solenoid valve (P) - Swivel motor
5	RD138−62893	SP solenoid valve (H1) - Water flange upstream
6	RD138−62891	SP solenoid valve (H2) - Water flange down stream

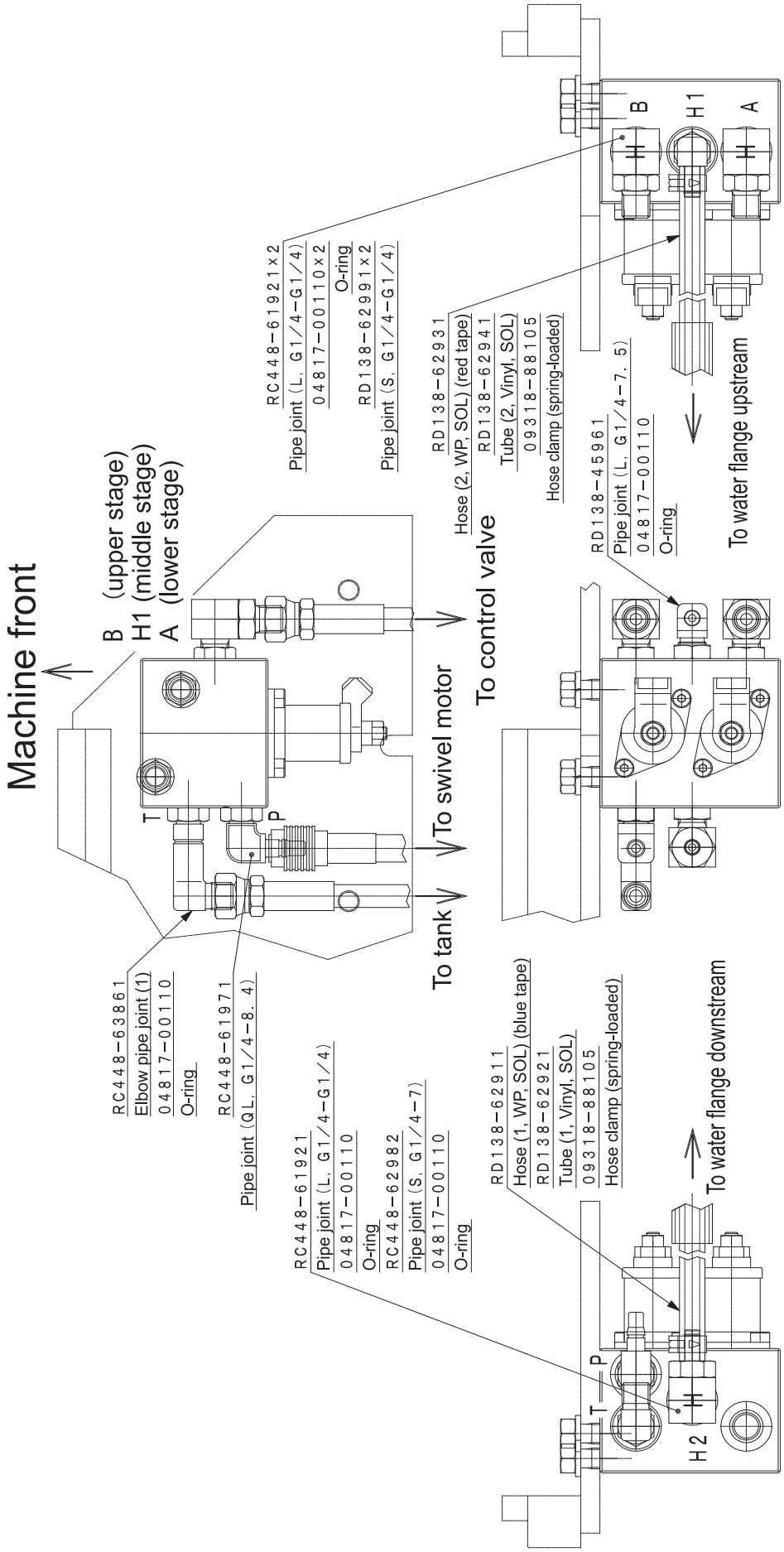

3. Heat-up circuit

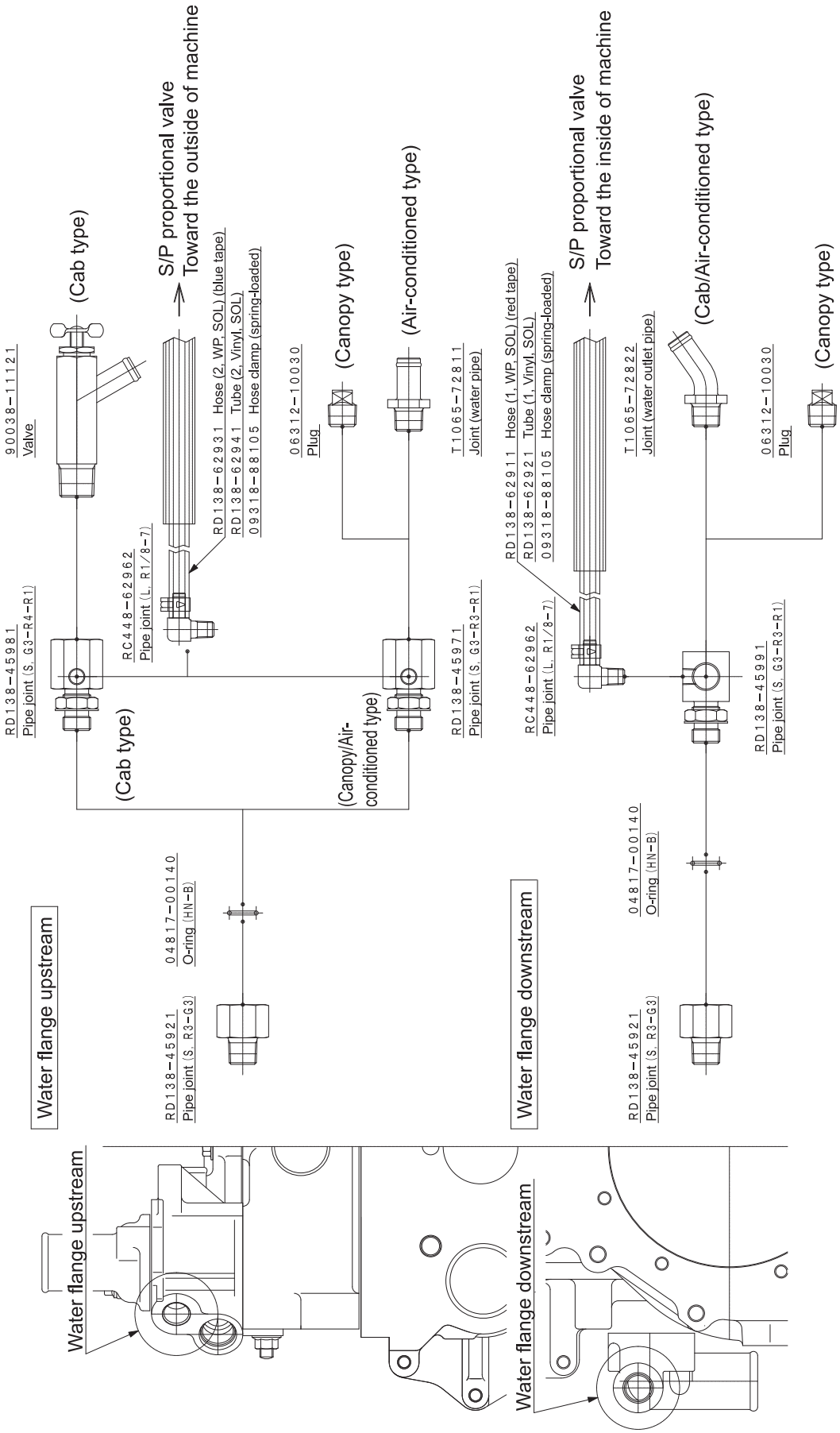

g. Travel motor: KX91-3S: PP-version

In this minor change, KX91-3S, U35S and U35-3S shockless valve spool has been deleted from the travel motor. Still Kubota's engineering has achieved the improved feeling at start-up and stop. Here are the explanation in detail how done.

Improvement of start-up and stop feeling

1. Market demand to the travel motor

1) In-shoe type motor ⇒ Wheel type motor
2) High speed ⇒ Hi-Low speed change structure
3) Traveling feeling ⇒ Shockless relief valve
   ⇒ Shockless spool
   ⇒ Anti-void valve

2. Counterbalance mechanism

1) At start-up and while traveling

Fig. 1 shows the circuit diagram when the motor gets started and keeps running. The hydraulic oil from the pump at start of the motor is introduced to port P1. The hydraulic oil flows through the check valve L to keep the motor running. The hydraulic oil at port P1 passes through the orifice L to act against the end of the spool. The spool then moves to the right against the force of spring R. The return oil from the motor flows through the variable orifice of the spool and port P2, and back into the tank. When the return oil passes via the spool's variable orifice, a back pressure occurs at port M2. If the counterbalance spool is slow in motion, therefore, a higher-than-expected pressure is applied at port M2 and you may feel a jolt at the start of the machine.
When the motor stops and the control valve gets back to neutral, the hydraulic oil from the pump is cut off and the pressures at ports P1 and P2 become the same as shown in Fig. 1. Then, the spool is affected by the force of spring R and comes back from the state in Fig. 1 to that in Fig. 2. At this time, the outlet port M2 is gradually throttled by the variable orifice. On the other hand, the motor keeps in motion by the inertia force. This produces a brake pressure at port M2, by which the motor gradually slows down and comes to a stop. If the pressure at M2 would rise violently, the motor would come to a sudden stop and you would feel a jolt at the stop.

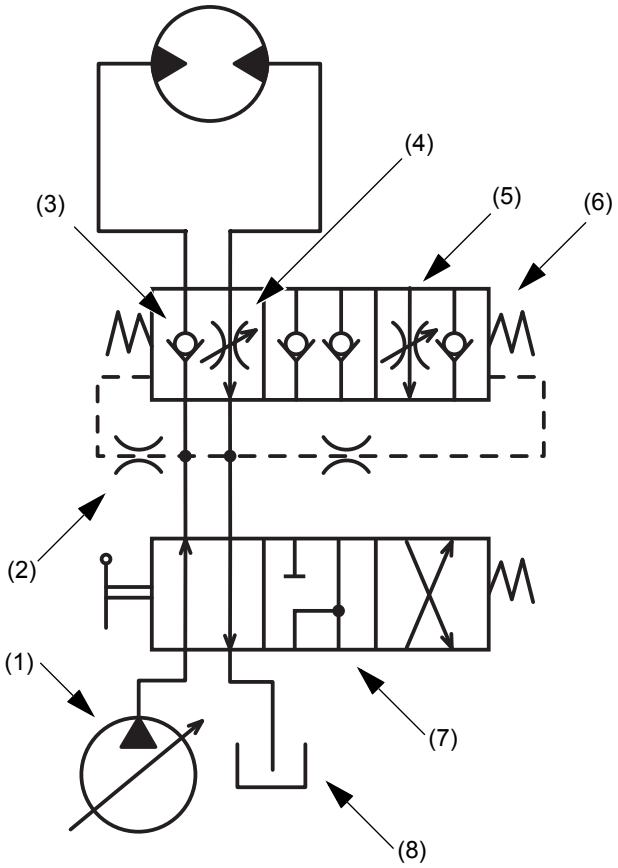

Fig.1 At start-up and while traveling

(1) Pump
(2) Orifice L
(3) Check valve L
(4) Variable orifice part
(5) Counterbalance spool
(6) Spring R
(7) Control valve
(8) Tank

2) Better feeling at start and stop

To improve the start-up feeling, the counter-balance spool must be activated quickly to keep the start-up pressure at port M2 low. To enhance the stop feeling, on the other hand, the brake pressure at port M2 should rise smoothly. In other words, it is important how well the pressure at port M2 can be controlled in starting and stopping the machine.

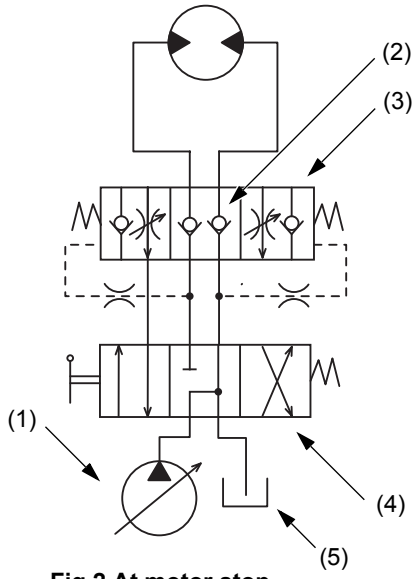

Fig.2 At motor stop
(1) Pump
(2) Check valve
(3) Counterbalance spool
(4) Control valve
(5) Tank

3) Conventional pressure control method

The pressure at port M2 has been so far controlled by giving better counter-balance mechanism response and mounting a relief valve with shockless function. As illustrated in Fig. 6, the shockless relief valve is activated utilizing the difference between the pressure receiving area (S1) and spring chamber area (S2). While the free piston provided around the relief housing is moving, the M2 port pressure is held at low level. When the free piston has completely moved, the relief valve gets activated at a specified pressure. The M2 port pressure is thus raised in two stages, which eases possible violent jolts.

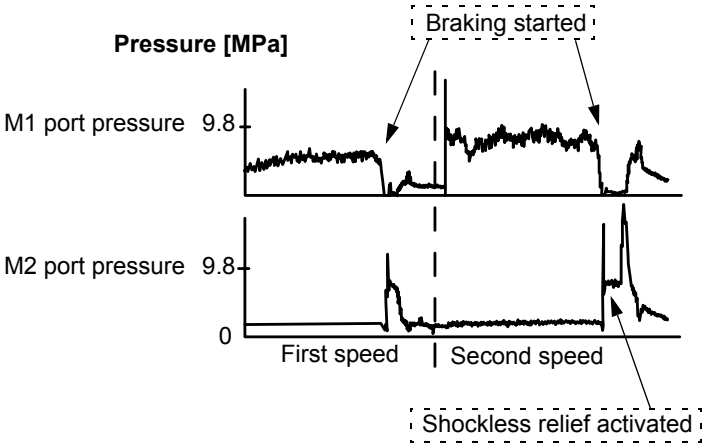

Fig. 3 Brake pressure waveform
(with shockless relief valve)

Fig. 7 shows the brake pressure waveform of the travel motor with shockless relief valve. As clear in this figure, the M2 port pressure is different at a first-speed stop and a second-speed stop. If the stop feeling is adjusted in matching the shockless action pressure with the M2 port pressure for second-speed stop, the feeling will not be just right at the M2 port pressure for first-speed stop. If adjusted for the first-speed stop, to the contrary, the second-speed stop feels unsmooth. In the existing construction, it is difficult to have both the first-speed and the second-speed stop feelings equally good.

4) Improvement of the counterbalance spool performance

The characteristics and responsiveness of the counterbalance spool's variable orifice are adjustable to better control the M2 port pressure. At the start, the spool's spring force gets weak for the counterbalance spool to switch over at low pressure. This makes for smooth start-up. At the stop, the variable orifice's characteristic settings and the counterbalance spool's return time are adjusted to produce the M2 port pressure smoothly.
The variable orifice characteristics refer to changes in the counterbalance spool orifice's opening area. As the spool moves, the opening area changes, which produces a pressure corresponding to the opening area. The counterbalance spool's return time is determined by the spring force and the orifice opening. The stronger the spring force and the larger the orifice opening, the quicker the counterbalance spool returns. A weaker spring force and a smaller orifice opening, contrarily, bring back the spool slowly. As discussed above, the counterbalance spool's orifice characteristics and return time are preset, and the actual machine will be matching-tested to achieve better feeling.

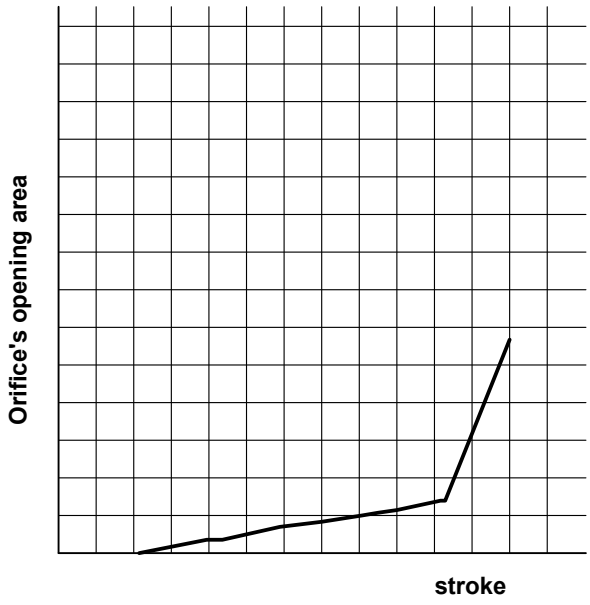

Fig. 4 Spool stroke and opening

In case of KX91-3, two orifices are incorporated in the pilot line and counterbalance spool has several holes for the variable orifice function as shown in Fig. 5.
With this variable orifice, spool stroke and opening area of the counterbalance spool is as shown in Fig. 4.

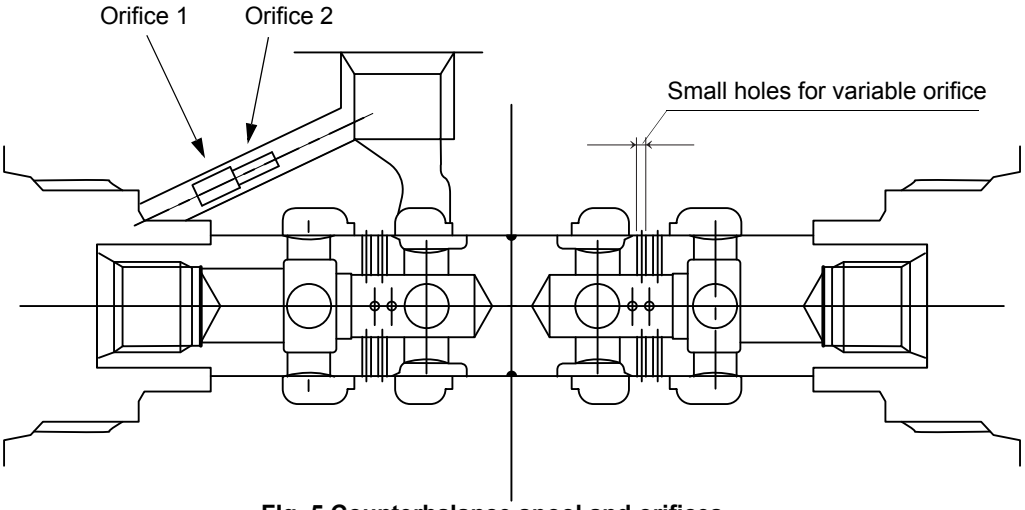

FIg. 5 Counterbalance spool and orifices

5) Performance comparison

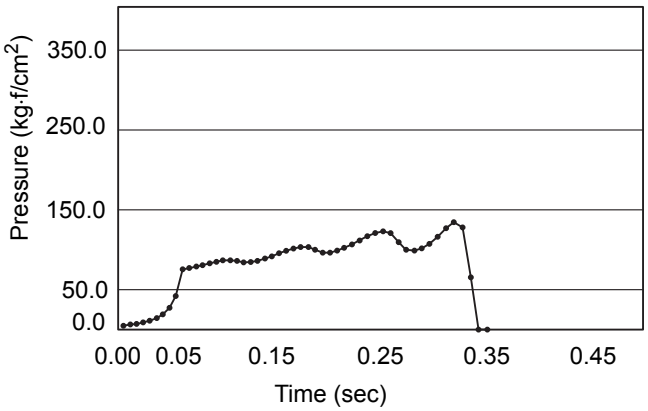

FIg. 6 New Type: High speed

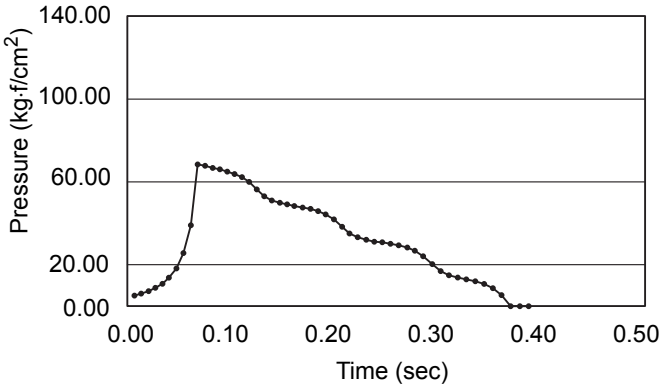

Fig. 7 New type: Low speed

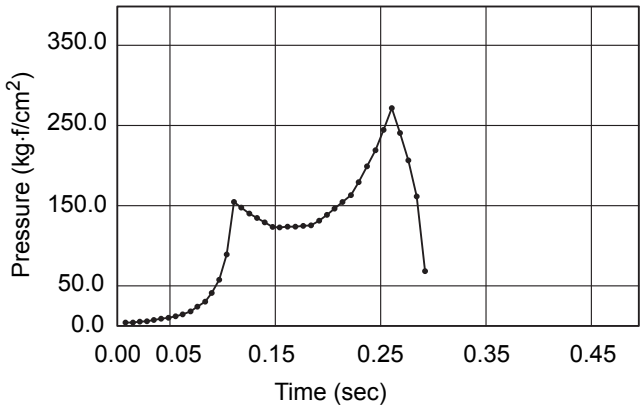

Fig. 8 Previous type: High speed

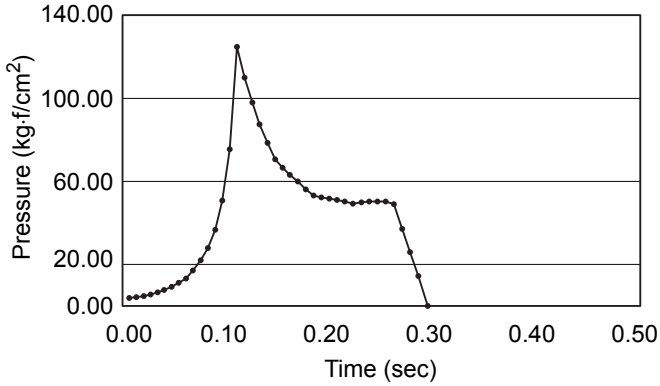

Fig. 9 Previous type: Low speed

As above figures indicate that the previous type shows high peak pressure. New type figures show comparatively low peak pressure and regulated.
A time to stop is longer by approx. 0.1 second.
In this way, traveling shock amount while ordinally working condition is almost equivalent or a little better than the previous type.

h. Travel motor minor change: KX121-3S·α, 161-3S·α, U45-3S·α

1. Motor change points

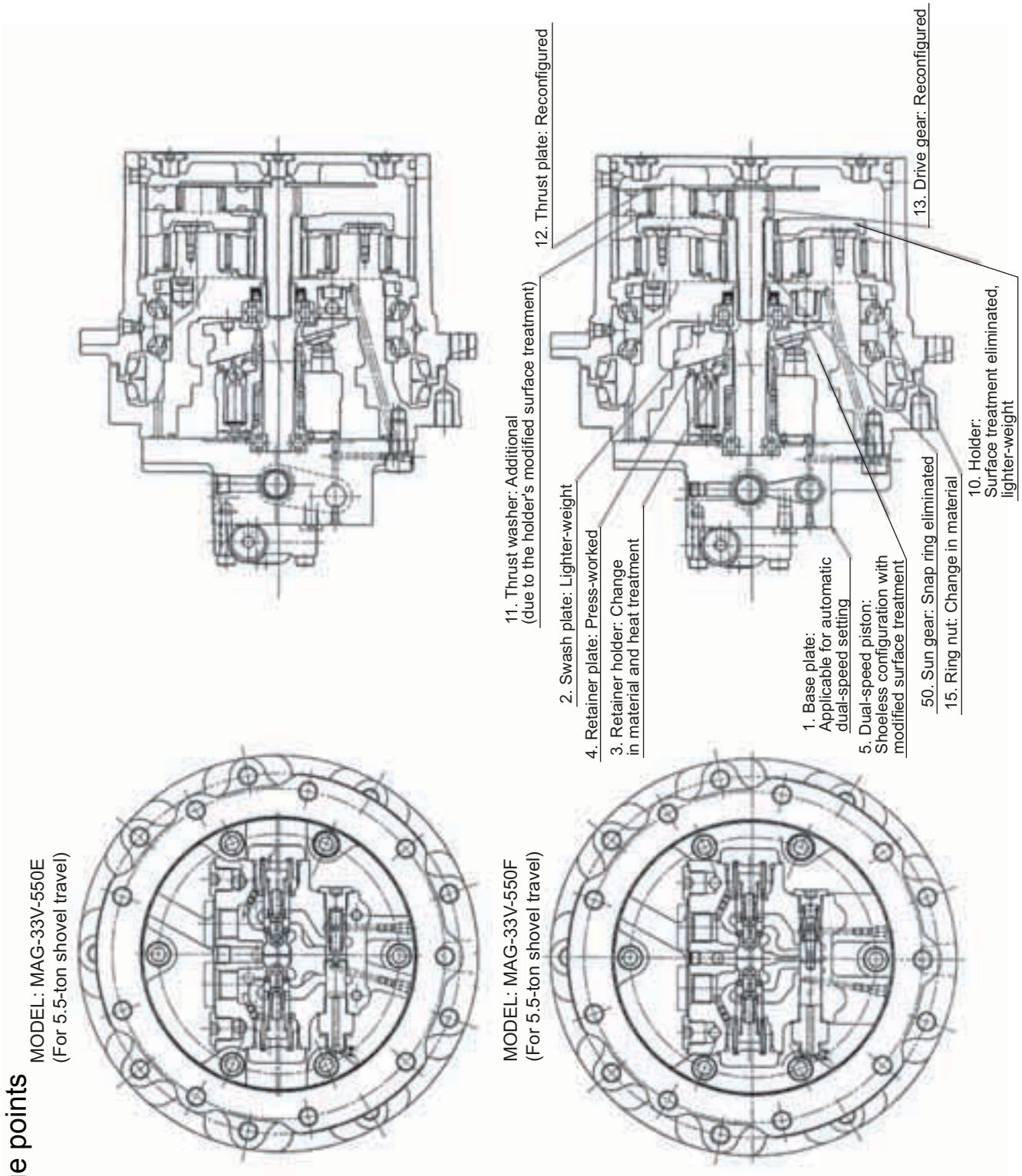

2. Swash plate and Hi-Low piston

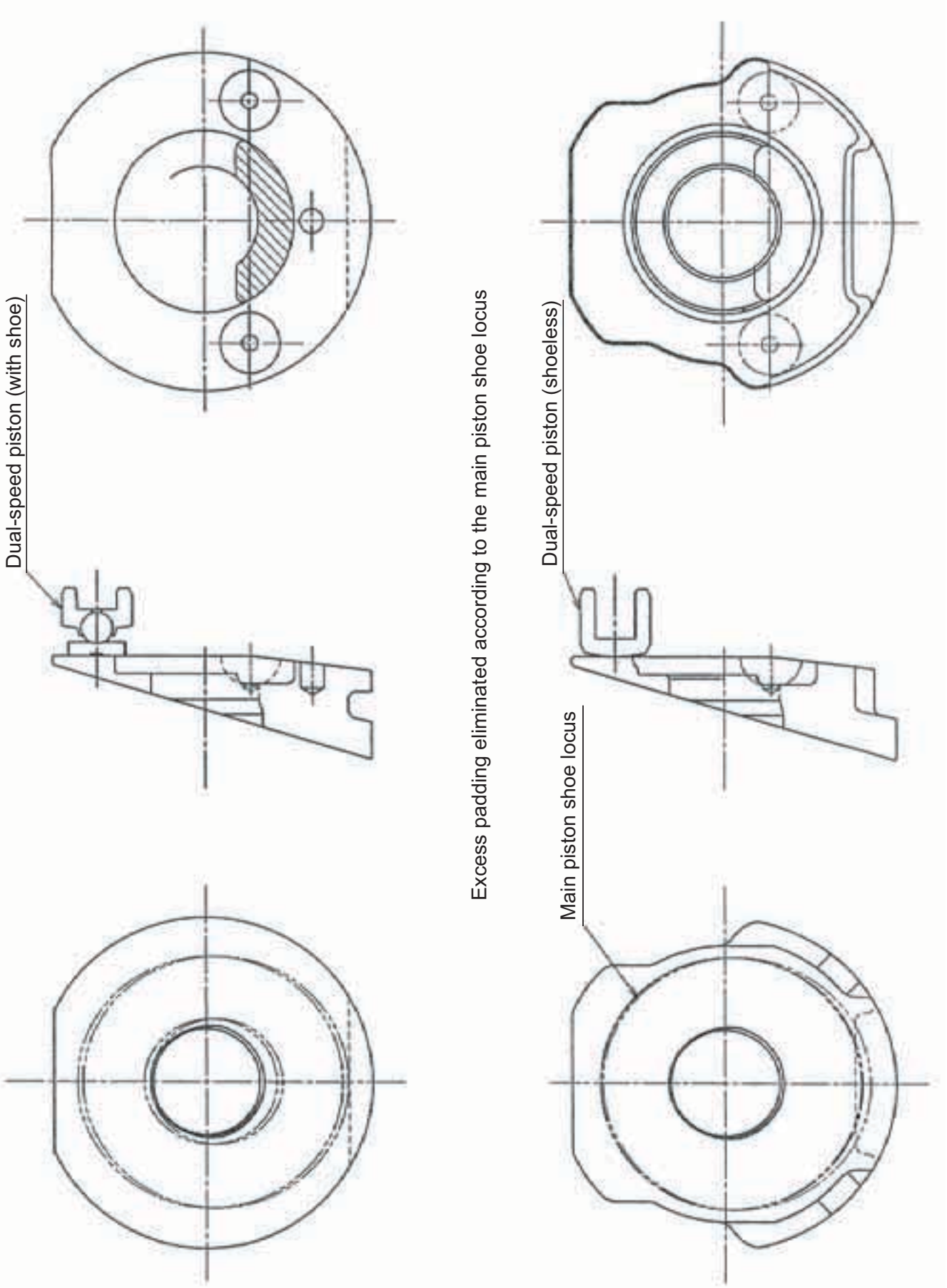

D. Hydraulic circuit diagram

1. KX91-3S: KTC-version 93
2. KX91-3S: KCL, KTA-version 94
3. KX91-3α: EU-version 95
4. KX101-3α: EU-version 96
5. U35S: KTC-version 97
6. U35-3S: KTA-version, U35S: KCL-version 98
7. U35-3α: EU-version 99
8. KX121-3S: KTC, KCL-version 100
9. KX121-3S: KTA-version 101
10. KX121-3α: EU-version 102
11. KX161-3S: KTC, KCL, KTA-version 103
12. KX161-3α: EU-version 104
13. U45-3S: KTA-version 105
14. U45-3α: EU-version 106
15. Hydraulic components layout: KX91-3S·α, KX101-3S·α, U35S, U35-3S·α 107
16. Hydraulic components layout: KX121-3S·α, KX161-3S·α 108

1. KX91-3S: KTC-version

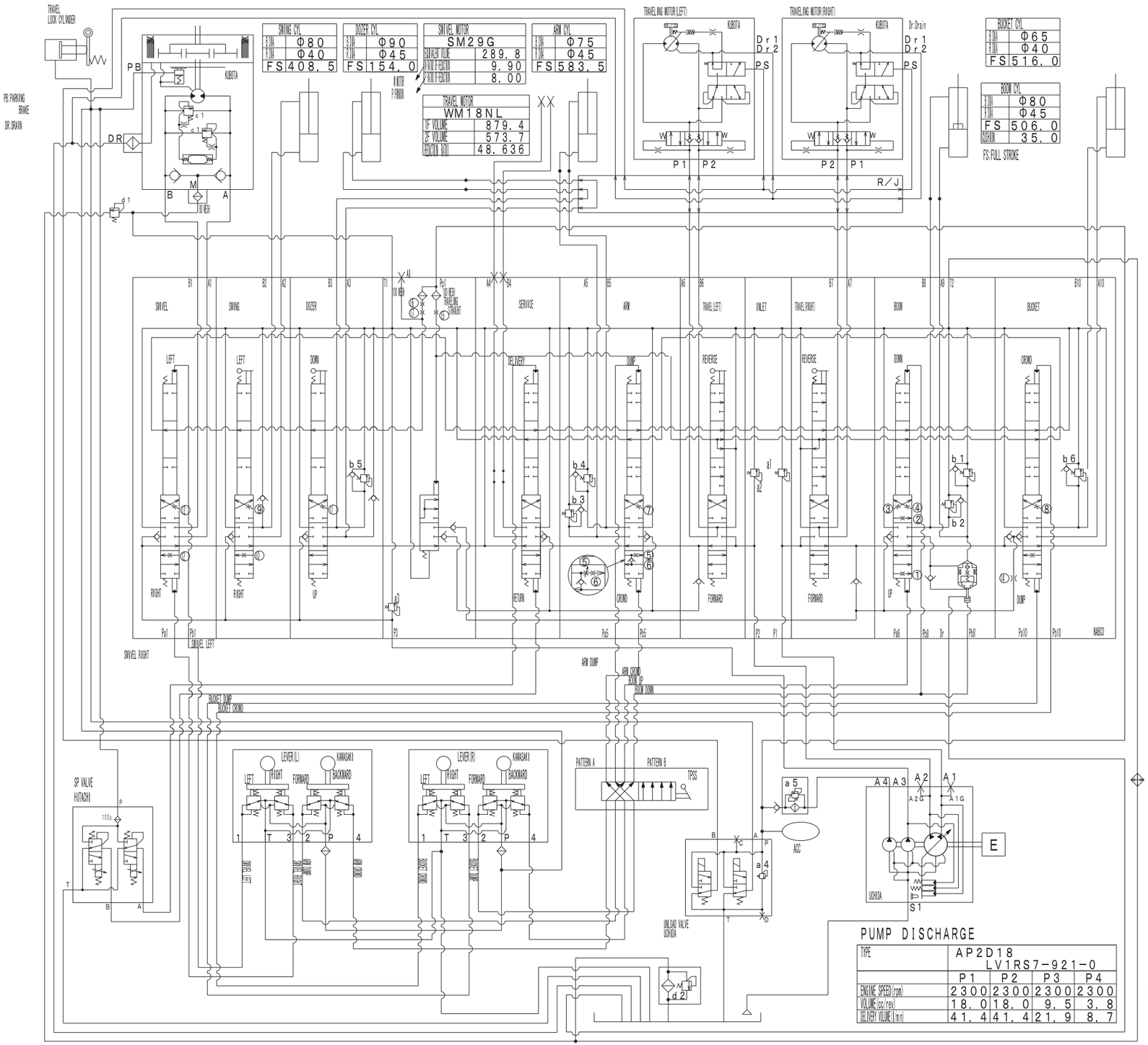

SIZE OF NOTCHES AND ORIFICES

A LIST OF DIAPHRAM		REMARKS	
①	Φ0.8equiv	BOOM UP	P→T
②	Φ1.0equiv	BOOM DOWN	P→T
③	Φ2.0equiv		P→C
④	Φ3.1equiv		C→T
⑤	Φ4.3equiv	ARM CROWD	C→T
⑥	Φ2.0equiv	ARM CROWD	FIL-TYP
⑦	Φ4.0equiv	ARM DUMP	C→T
⑧	Φ3.6equiv	BUCKET CROWD	C→T
⑨	Φ2.3equiv	SWING LEFT	C→T
⑩	Φ2.1equiv	SWING RIGHT	C→T
⑪	Φ2.3equiv	DOZER DOWN	C→T
⑫	Φ2.9equiv	SWIVEL	C→T
⑬	Φ0.5equiv	AIR BLEEDING AFTER 6mm stroke	
⑭	Φ1.6equiv	BOOM PRIORITY ORIFICE	
⑮	Φ0.3equiv	TRAVEL STRAIGHT SEALING ORIFICE	
⑯	Φ0.3equiv	A1 SIGNAL ORIFICE	
⑰	Φ0.3equiv	A1 SIGNAL ORIFICE	

BENCH SET PRESSURE VALUE

RELIEF PRESS (kgf/cm2)		
a1	240.0	P1
a2	240.0	P2
a3	200.0	P3
a4	40.0	P4
a5	1.5	FILTER
b1	275.0	BOOM(BOTTOM)
b2	275.0	BOOM(ROD)
b3	280.0	ARM(BOTTOM)
b4	280.0	ARM(ROD)
b5	245.0	DOZER(BOTTOM)
b6	280.0	BUCKET(BOTTOM)
c1	170.0	SWIVEL MOTOR
c2	250.0	TRAVEL MOTOR
d1	2.0	CHECK VALVE
d2	1.0	RETURN FILTTER

SPECIFICATION OF OIL COOLER	
HEAT EXCHANGE	3900 kcal/h
CONDITIONS	V = 15 l/min
	Δt = 75 ℃
	tol=110 ℃
CORE TYPE	CORRUGATE TYPE WITH LOUVER
CORE SIZE	300×225.6×32
CORE TIER	15 TIERS
FIN PITCH	fp=4.0/2

KX91-3 (US)
HYDRAULIC CIRCUIT

2. KX91-3S: KCL, KTA-version

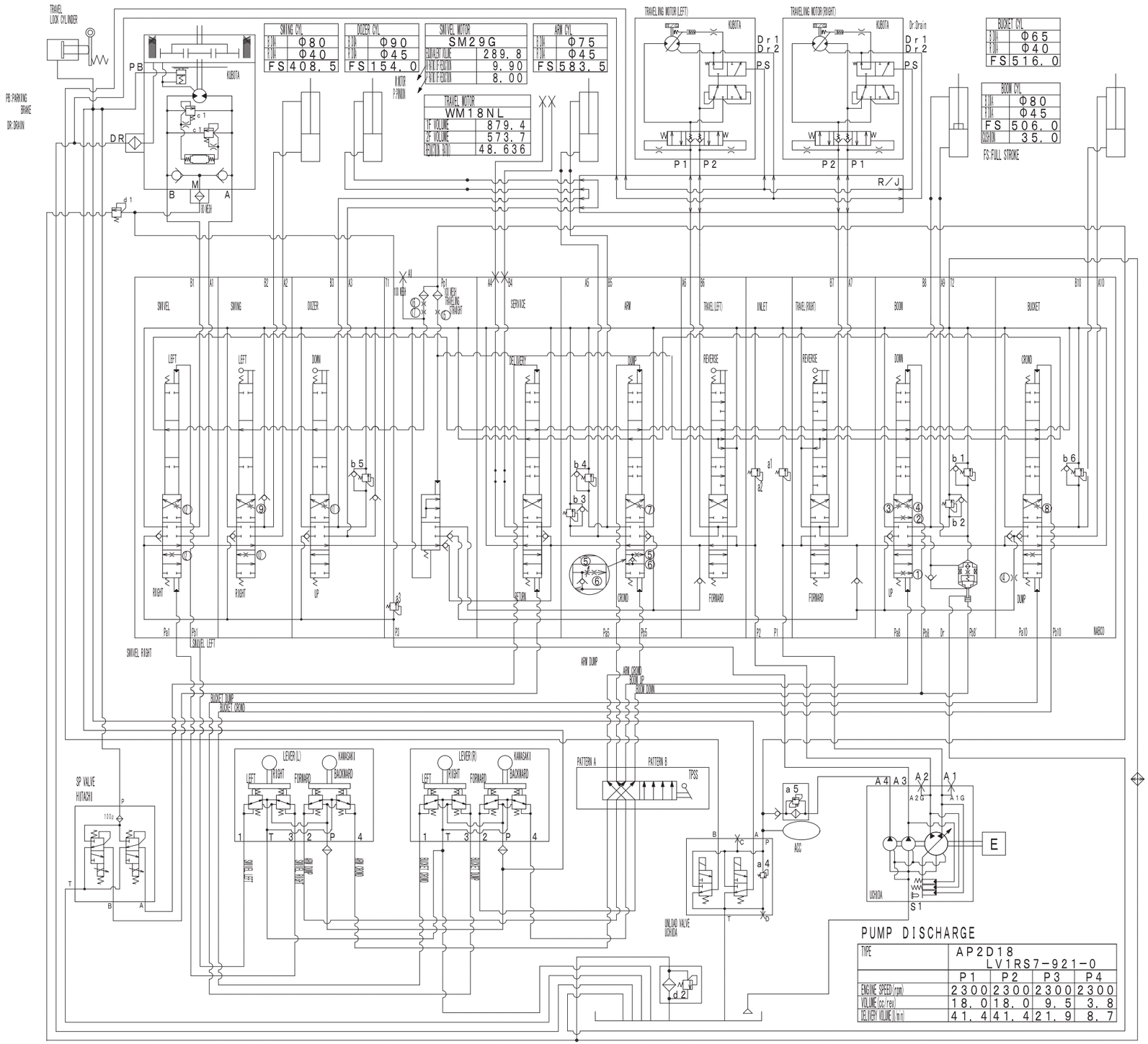

SIZE OF NOTCHES AND ORIFICES

A LIST OF DIAPHRAGM		REMARKS	
1	Φ0.8equiv	BOOM UP	P→T
2	Φ1.0equiv	BOOM DOWN	P→T
3	Φ2.0equiv		P→C
4	Φ3.1equiv		C→T
5	Φ4.3equiv	ARM CROWD	C→T
6	Φ2.0equiv	ARM CROWD	FH-TPF
7	Φ4.0equiv	ARM DUMP	C→T
8	Φ3.6equiv	BUCKET CROWD	C→T
9	Φ2.3equiv	SWING LEFT	C→T
10	Φ2.1equiv	SWING RIGHT	C→T
11	Φ2.3equiv	DOZER DOWN	C→T
12	Φ2.9equiv	SWIVEL	C→T
13	Φ0.5equiv	AIR BLEEDING AFTER 6mm stroke	
14	Φ1.6equiv	BOOM PRIORITY ORIFICE	
15	Φ0.3equiv	TRAVEL STRAIGHT SERVING ORIFICE	
16	Φ0.3equiv	A1 SIGNAL ORIFICE	
17	Φ0.3equiv	A1 SIGNAL ORIFICE	

BENCH SET PRESSURE VALUE

RELIEF PRESS (kgf/cm2)		
a1	240.0	P1
a2	240.0	P2
a3	200.0	P3
a4	40.0	P4
a5	1.5	FILLTER
b1	275.0	BOOM (BOTTOM)
b2	275.0	BOOM (ROD)
b3	280.0	ARM (BOTTOM)
b4	280.0	ARM (ROD)
b5	245.0	DOZER (BOTTOM)
b6	280.0	BUCKET (BOTTOM)
c1	170.0	SWIVEL MOTOR
c2	250.0	TRAVEL MOTOR
d1	2.0	CHECK VALVE
d2	1.0	RETURN FILTTER

SPECIFICATION OF OIL COOLER

HEAT EXCHANGING	11780 Kcal/h
CONDITIONS	V = 15 l/min
	Δt = 7.5 ℃
	t o l = 110 ℃
CORE TYPE	CORRUGATE TYPE WITH LOUVER
CORE SIZE	300×300.6×32
CORE TYPER	20 TIERS
FIN PITCH	fp=4.0/2

PUMP DISCHARGE

TYPE	AP2D18 LV1RS7-921-0			
	P1	P2	P3	P4
ENGINE SPEED (rpm)	2300	2300	2300	2300
VOLUME (cc/rev)	18.0	18.0	9.5	3.8
DELIVERY VOLUME (l/min)	41.4	41.4	21.9	8.7

KX91-3 (AU, CA)
HYDRAULIC CIRCUIT

3. KX91-3α: EU-version

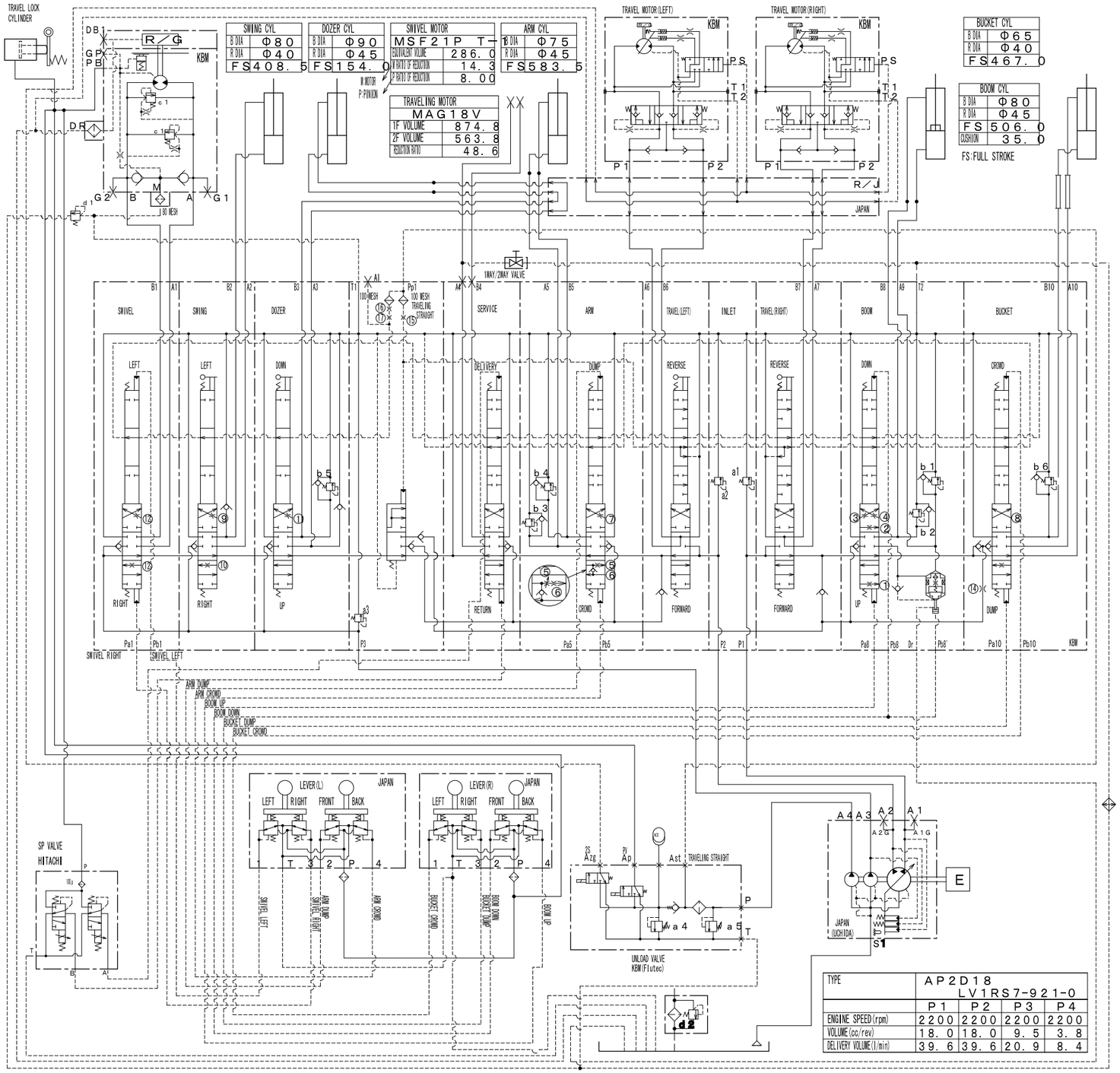

SIZE OF NOTCHES AND ORIFICES

LIST OF ORIFICE DIA.		REMARKS	
①	Φ0.8 EQUIV.	BOOM UP	P→T
②	Φ1.1 EQUIV.	BOOM DOWN	P→T
③	Φ1.9 EQUIV.		P→C
④	Φ3.1 EQUIV.		C→T
⑤	Φ4.3 EQUIV.	ARM CROWD	C→T
⑥	Φ2.0 EQUIV.	ARM CROWD	FIX-TYPE
⑦	Φ4.0 EQUIV.	ARM DUMP	C→T
⑧	Φ3.6 EQUIV.	BUCKET CROWD	C→T
⑨	Φ2.3 EQUIV.	SWING LEFT	C→T
⑩	Φ2.1 EQUIV.	SWING RIGHT	C→T
⑪	Φ2.3 EQUIV.	DOZER DOWN	C→T
⑫	Φ2.9 EQUIV.	SWIVEL	C→T
⑬	Φ0.5 EQUIV.	AIR BLEEDING AFTER 6mm stroke	
⑭	Φ1.6 EQUIV.	BOOM PRIORITY ORIFICE	
⑮	Φ0.3 EQUIV.	TRAVEL STRAIGHT SENSING ORIFICE	
⑯	Φ0.37 EQUIV.	A1 SIGNAL ORIFICE	
⑰	Φ0.3 EQUIV.	A1 SIGNAL ORIFICE	

BENCH SET PRESSURE VALUE

RELIEF PRESSURE(kgf/cm2)		
a1	240.0	P1
a2	240.0	P2
a3	200.0	P3
a4	40.0	P4
a5	70.0	FILLTER
b1	275.0	BOOM(BOTTOM)
b2	275.0	BOOM(ROD)
b3	280.0	ARM(BOTTOM)
b4	280.0	ARM(ROD)
b5	245.0	DOZER(BOTTOM)
b6	280.0	BUCKET(BOTTOM)
c1	170.0	SWIVEL MOTOR
d1	2.0	CHECK VALVE
d2	1.0	RETURN FILTTER

SPECIFICATION OF OIL COOLER	
AMOUNT OF A RADIATION	8900 kcal/h
	V = 15 l/min
	Δt= 75 ℃
	to=110 ℃
CORE TYPE	CORRUGATE TYPE WITH LOUVER
CORE SIZE	300×225.6×32
CORE TIER	15 TIERS
FIN PITCH	fp=4.0/2

TYPE	AP2D18 LV1RS7-921-0			
	P1	P2	P3	P4
ENGINE SPEED(rpm)	2200	2200	2200	2200
VOLUME(cc/rev)	18.0	18.0	9.5	3.8
DELIVERY VOLUME(l/min)	39.6	39.6	20.9	8.4

KX91-3α

4. KX101-3α: EU-version

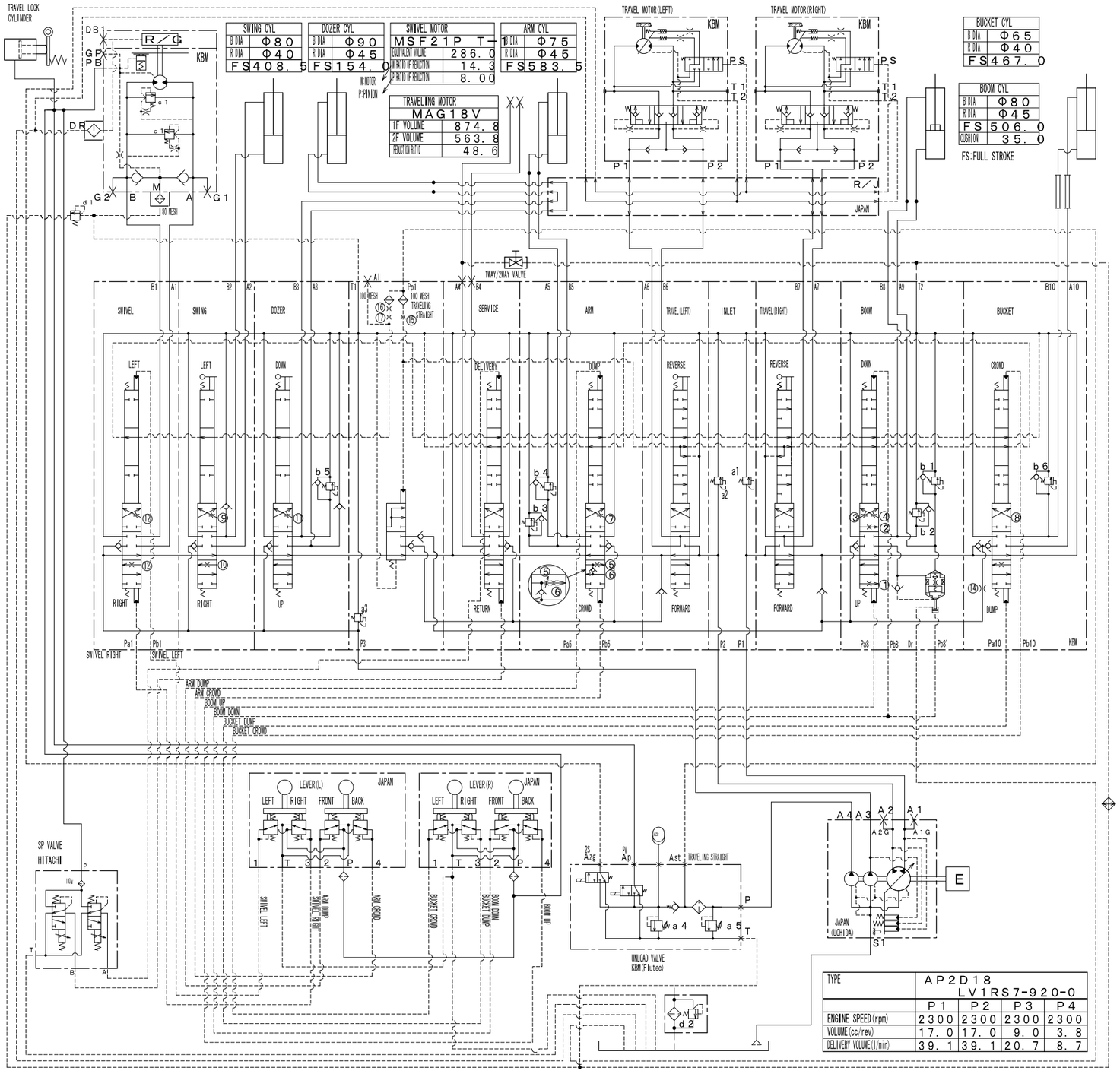

SIZE OF NOTCHES AND ORIFICES

LIST OF ORIFICE DIA.		REMARKS	
①	φ0.8 EQUIV.	BOOM UP	P→T
②	φ1.1 EQUIV.	BOOM DOWN	P→T
③	φ1.9 EQUIV.		P→C
④	φ3.1 EQUIV.		C→T
⑤	φ4.3 EQUIV.	ARM CROWD	C→T
⑥	φ2.0 EQUIV.	ARM CROWD	FIX-TYPE
⑦	φ4.0 EQUIV.	ARM DUMP	C→T
⑧	φ3.6 EQUIV.	BUCKET CROWD	C→T
⑨	φ2.3 EQUIV.	SWING LEFT	C→T
⑩	φ2.1 EQUIV.	SWING RIGHT	C→T
⑪	φ2.3 EQUIV.	DOZER DOWN	C→T
⑫	φ2.9 EQUIV.	SWIVEL	C→T
⑬	φ0.5 EQUIV.	AIR BLEEDING AFTER 6mm stroke	
⑭	φ1.6 EQUIV.	BOOM PRIORITY ORIFICE	
⑮	φ0.3 EQUIV.	TRAVEL STRAIGHT SENSING ORIFICE	
⑯	φ0.37 EQUIV.	A1 SIGNAL ORIFICE	
⑰	φ0.3 EQUIV.	A1 SIGNAL ORIFICE	

BENCH SET PRESSURE VALUE

RELIEF PRESSURE(kgf/cm2)		
a 1	240.0	P1
a 2	240.0	P2
a 3	200.0	P3
a 4	40.0	P4
a 5	70.0	FILLTER
b 1	275.0	BOOM(BOTTOM)
b 2	275.0	BOOM(ROD)
b 3	280.0	ARM(BOTTOM)
b 4	280.0	ARM(ROD)
b 5	245.0	DOZER(BOTTOM)
b 6	280.0	BUCKET(BOTTOM)
c 1	170.0	SWIVEL MOTOR
d 1	2.0	CHECK VALVE
d 2	1.0	RETURN FILTTER

SPECIFICATION OF OIL COOLER	
AMOUNT OF A REDUCTION	8900 kcal/h
	V = 15 l/min
	Δt= 75 ℃
	tol=110 ℃
CORE TYPE	CORRUGATE TYPE WITH LOUVER
CORE SIZE	300×225.6×32
CORE TIER	15 TIERS
FIN PITCH	fp=4.0/2

TYPE	AP2D18 LV1RS7-920-0			
	P1	P2	P3	P4
ENGINE SPEED(rpm)	2300	2300	2300	2300
VOLUME(cc/rev)	17.0	17.0	9.0	3.8
DELIVERY VOLUME(l/min)	39.1	39.1	20.7	8.7

KX101-3α

5. U35S: KTC-version

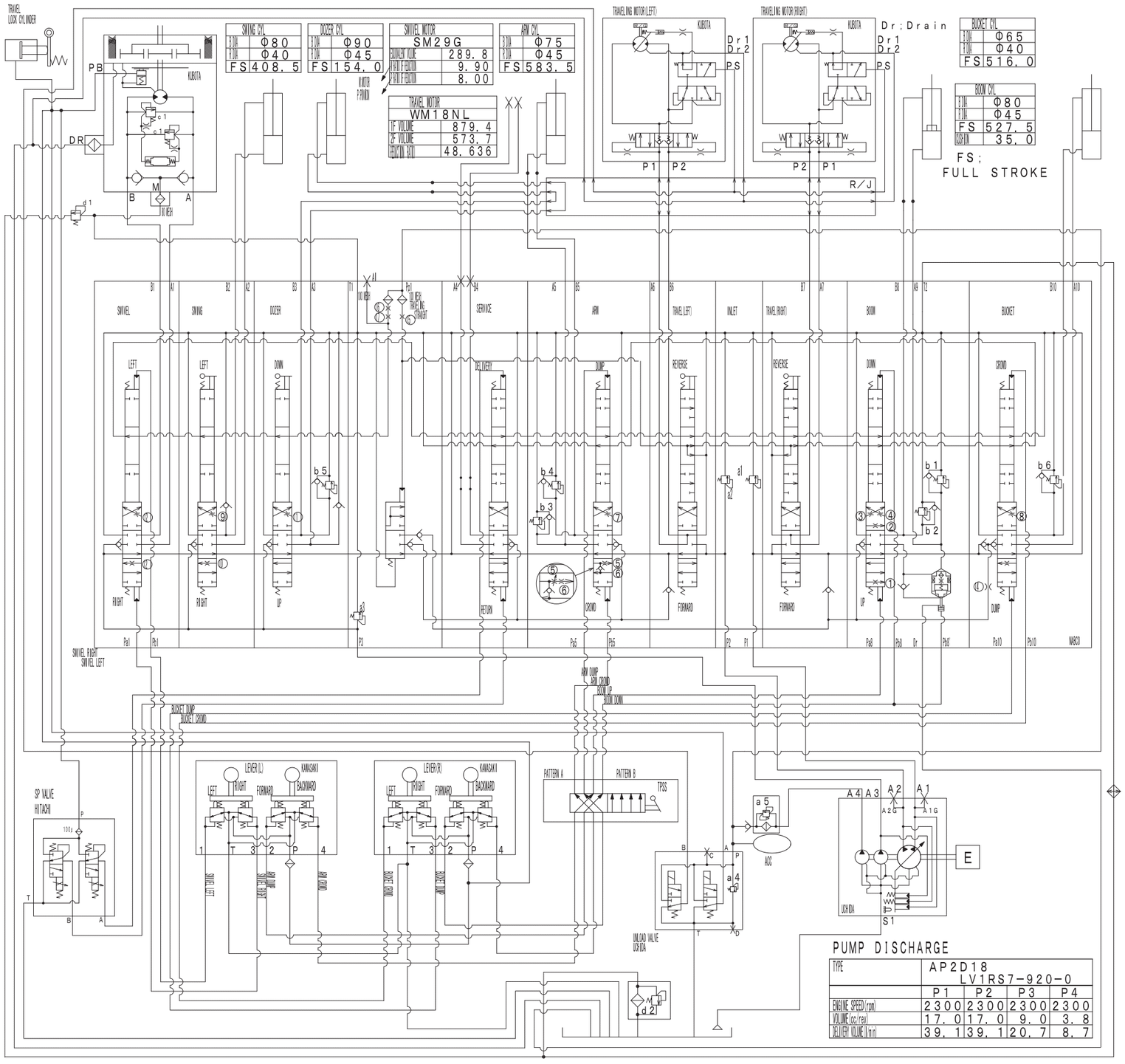

SIZE OF NOTCHES AND ORIFICES

A LIST OF DIAPHRAGM		REMARKS	
1	Φ0.8equiv	BOOM UP	P→T
2	Φ1.0equiv	BOOM DOWN	P→T
3	Φ2.0equiv		P→C
4	Φ3.1equiv		C→T
5	Φ4.3equiv	ARM CROWD	C→T
6	Φ2.0equiv	ARM CROWD	FIT-TYPE
7	Φ4.0equiv	ARM DUMP	C→T
8	Φ3.6equiv	BUCKET CROWD	C→T
9	Φ2.3equiv	SWING LEFT	C→T
10	Φ2.1equiv	SWING RIGHT	C→T
11	Φ2.3equiv	DOZER DOWN	C→T
12	Φ2.9equiv	SWIVEL	C→T
13	Φ0.5equiv	AIR BLEEDING AFTER 6mm stroke	
14	Φ1.6equiv	BOOM PRIORITY ORIFICE	
15	Φ0.3equiv	TRAVEL STRAIGHT SERVING ORIFICE	
16	Φ0.3equiv	A1 SIGNAL ORIFICE	
17	Φ0.3equiv	A1 SIGNAL ORIFICE	

BENCH SET PRESSURE VALUE

	RELIEF PRESS (kgf/cm2)	
a1	250.0	P1
a2	250.0	P2
a3	200.0	P3
a4	40.0	P4
a5	1.5	FILLTER
b1	280.0	BOOM (BOTTOM)
b2	280.0	BOOM (ROD)
b3	285.0	ARM (BOTTOM)
b4	285.0	ARM (ROD)
b5	245.0	DOZER (BOTTOM)
b6	285.0	BUCKET (BOTTOM)
c1	205.0	SWIVEL MOTOR
c2	250.0	TRAVEL MOTOR
d1	2.0	CHECK VALVE
d2	1.0	RETURN FILTER

SPECIFICATION OF OIL COOLER	
HEAT DISSIPATION	8800 kcal/h
CONDITIONS	V = 15 l/min
	Δt = 75 ℃
	tol = 110 ℃
CORE TYPE	CORRUGATE TYPE WITH LOUVER
CORE SIZE	300×225.6×32
CORE TIER	15 TIERS
FIN PITCH	fp=4.0/2

U35 (US)
HYDRAULIC CIRCUIT

6. U35-3S: KTA-version, U35S: KCL-version

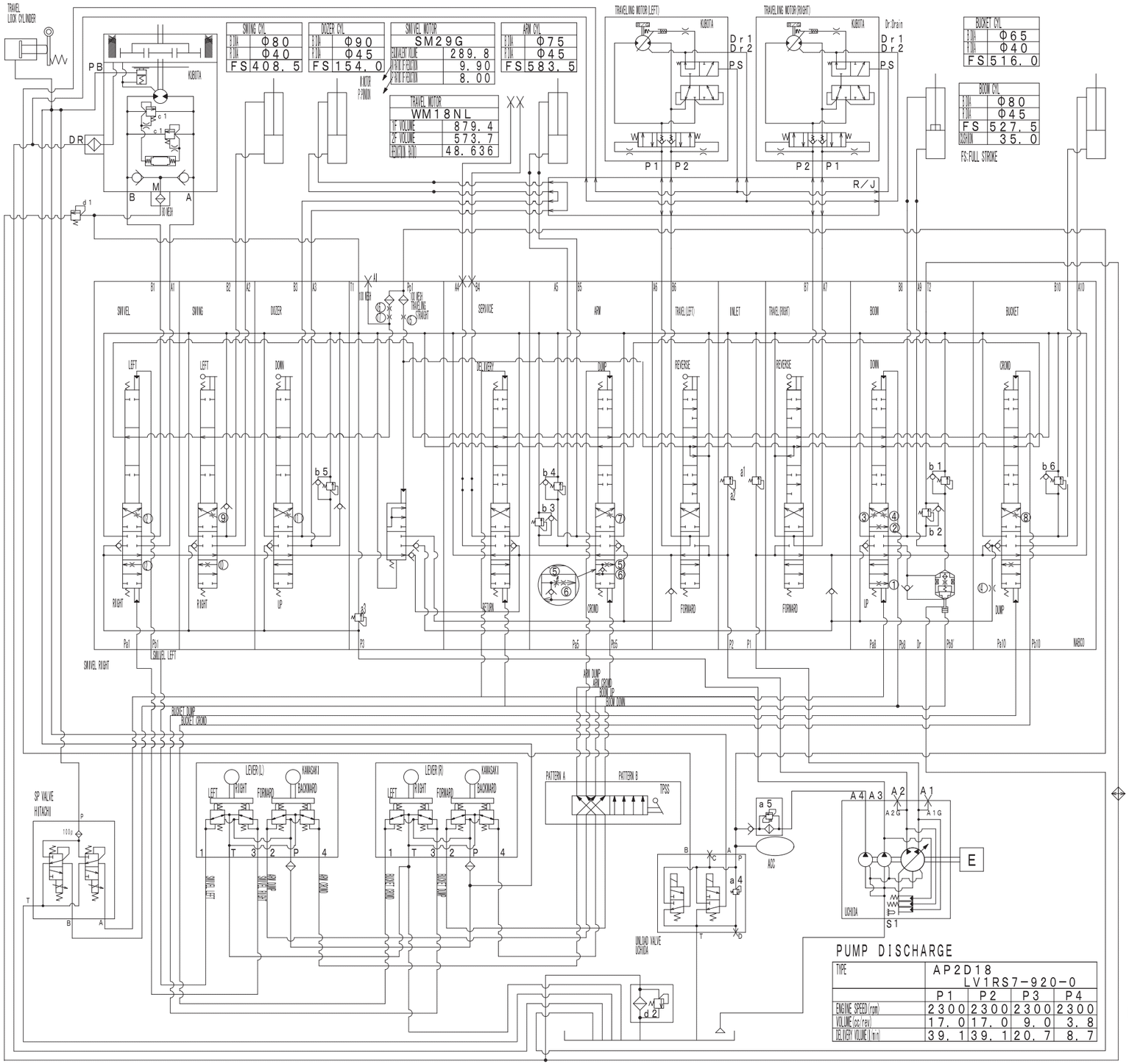

SIZE OF NOTCHES AND ORIFICES

A LIST OF DIAPHRAGM		REMARKS	
①	Φ0.8equiv	BOOM UP	P→T
②	Φ1.0equiv	BOOM DOWN	P→T
③	Φ2.0equiv		P→C
④	Φ3.1equiv		C→T
⑤	Φ4.3equiv	ARM GROND	C→T
⑥	Φ2.0equiv	ARM GROND	FH-TPF
⑦	Φ4.0equiv	ARM DUMP	C→T
⑧	Φ3.6equiv	BUCKET GROND	C→T
⑨	Φ2.3equiv	SWING LEFT	C→T
⑩	Φ2.1equiv	SWING RIGHT	C→T
⑪	Φ2.3equiv	DOZER DOWN	C→T
⑫	Φ2.9equiv	SWIVEL	C→T
⑬	Φ0.9equiv	AIR BLEEDING AFTER 6mm stroke	
⑭	Φ1.6equiv	BOOM PRIORITY ORIFICE	
⑮	Φ0.3equiv	TRAVEL STRAIGHT SERVING ORIFICE	
⑯	Φ0.3equiv	A1 SIGNAL ORIFICE	
⑰	Φ0.3equiv	A1 SIGNAL ORIFICE	

BENCH SET PRESSURE VALUE

RELIEF PRESS (kgf/cm2)		
a1	250.0	P1
a2	250.0	P2
a3	200.0	P3
a4	40.0	P4
a5	1.5	FILLTER
b1	280.0	BOOM (BOTTOM)
b2	280.0	BOOM (ROD)
b3	285.0	ARM (BOTTOM)
b4	285.0	ARM (ROD)
b5	245.0	DOZER (BOTTOM)
b6	285.0	BUCKET (BOTTOM)
c1	205.0	SWIVEL MOTOR
c2	250.0	TRAVEL MOTOR
d1	2.0	CHECK VALVE
d2	1.0	RETURN FILTTER

SPECIFICATION OF OIL COOLER	
HEAT DISSIPATION	11780 Kcal/h
CONDITIONS	V = 15 l/min
	Δt = 7.5 ℃
	t o l = 110 ℃
CORE TYPE	CORRUGATE TYPE WITH LOUVER
CORE SIZE	300×300.6×32
CORE TYPER	20 TIERS
FIN PITCH	fp=4.0/2

PUMP DISCHARGE

TYPE	AP2D18 LV1RS7-920-0			
	P1	P2	P3	P4
ENGINE SPEED (rpm)	2300	2300	2300	2300
VOLUME (cc/rev)	17.0	17.0	9.0	3.8
DELIVERY VOLUME (l/min)	39.1	39.1	20.7	8.7

U35-3 (AU, CA)
HYDRAULIC CIRCUIT

7. U35-3α: EU-version

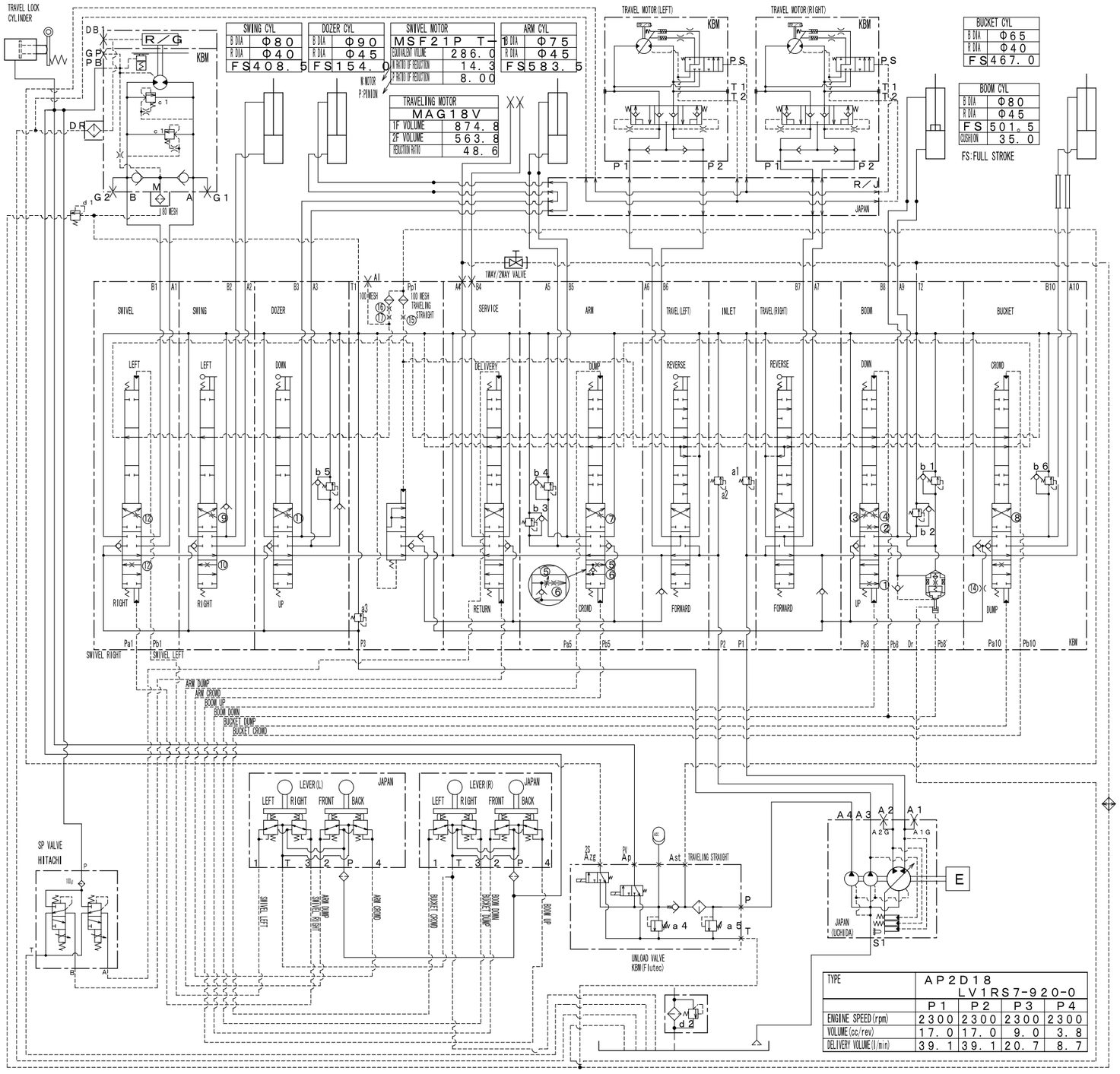

SIZE OF NOTCHES AND ORIFICES

LIST OF ORIFICE DIA.		REMARKS	
①	Φ0.8 EQUIV.	BOOM UP	P→T
②	Φ1.1 EQUIV.	BOOM DOWN	P→T
③	Φ1.9 EQUIV.		P→C
④	Φ3.1 EQUIV.		C→T
⑤	Φ4.3 EQUIV.	ARM CROWD	C→T
⑥	Φ2.0 EQUIV.	ARM CROWD	FIX-TYPE
⑦	Φ4.0 EQUIV.	ARM DUMP	C→T
⑧	Φ3.6 EQUIV.	BUCKET CROWD	C→T
⑨	Φ2.3 EQUIV.	SWING LEFT	C→T
⑩	Φ2.1 EQUIV.	SWING RIGHT	C→T
⑪	Φ2.3 EQUIV.	DOZER DOWN	C→T
⑫	Φ2.9 EQUIV.	SWIVEL	C→T
⑬	Φ0.5 EQUIV.	AIR BLEEDING AFTER 6mm stroke	
⑭	Φ1.6 EQUIV.	BOOM PRIORITY ORIFICE	
⑮	Φ0.3 EQUIV.	TRAVEL STRAIGHT SENSING ORIFICE	
⑯	Φ0.37 EQUIV.	A1 SIGNAL ORIFICE	
⑰	Φ0.3 EQUIV.	A1 SIGNAL ORIFICE	

BENCH SET PRESSURE VALUE

RELIEF PRESSURE(kgf/cm2)		
a1	240.0	P1
a2	240.0	P2
a3	200.0	P3
a4	40.0	P4
a5	70.0	FILLTER
b1	275.0	BOOM(BOTTOM)
b2	275.0	BOOM(ROD)
b3	280.0	ARM(BOTTOM)
b4	280.0	ARM(ROD)
b5	245.0	DOZER(BOTTOM)
b6	280.0	BUCKET(BOTTOM)
c1	170.0	SWIVEL MOTOR
d1	2.0	CHECK VALVE
d2	1.0	RETURN FILTTER

SPECIFICATION OF OIL COOLER	
AMOUNT OF HEAT REJECTION	8900 kcal/h
	V = 15 l/min
	Δt= 75 ℃
	tol=110 ℃
CORE TYPE	CORRUGATE TYPE WITH LOUVER
CORE SIZE	300×225.6×32
CORE TIER	15 TIERS
FIN PITCH	fp=4.0/2

TYPE	AP2D18 LV1RS7-920-0			
	P1	P2	P3	P4
ENGINE SPEED(rpm)	2300	2300	2300	2300
VOLUME(cc/rev)	17.0	17.0	9.0	3.8
DELIVERY VOLUME(l/min)	39.1	39.1	20.7	8.7

U35-3α

8. KX121-3S: KTC, KCL-version

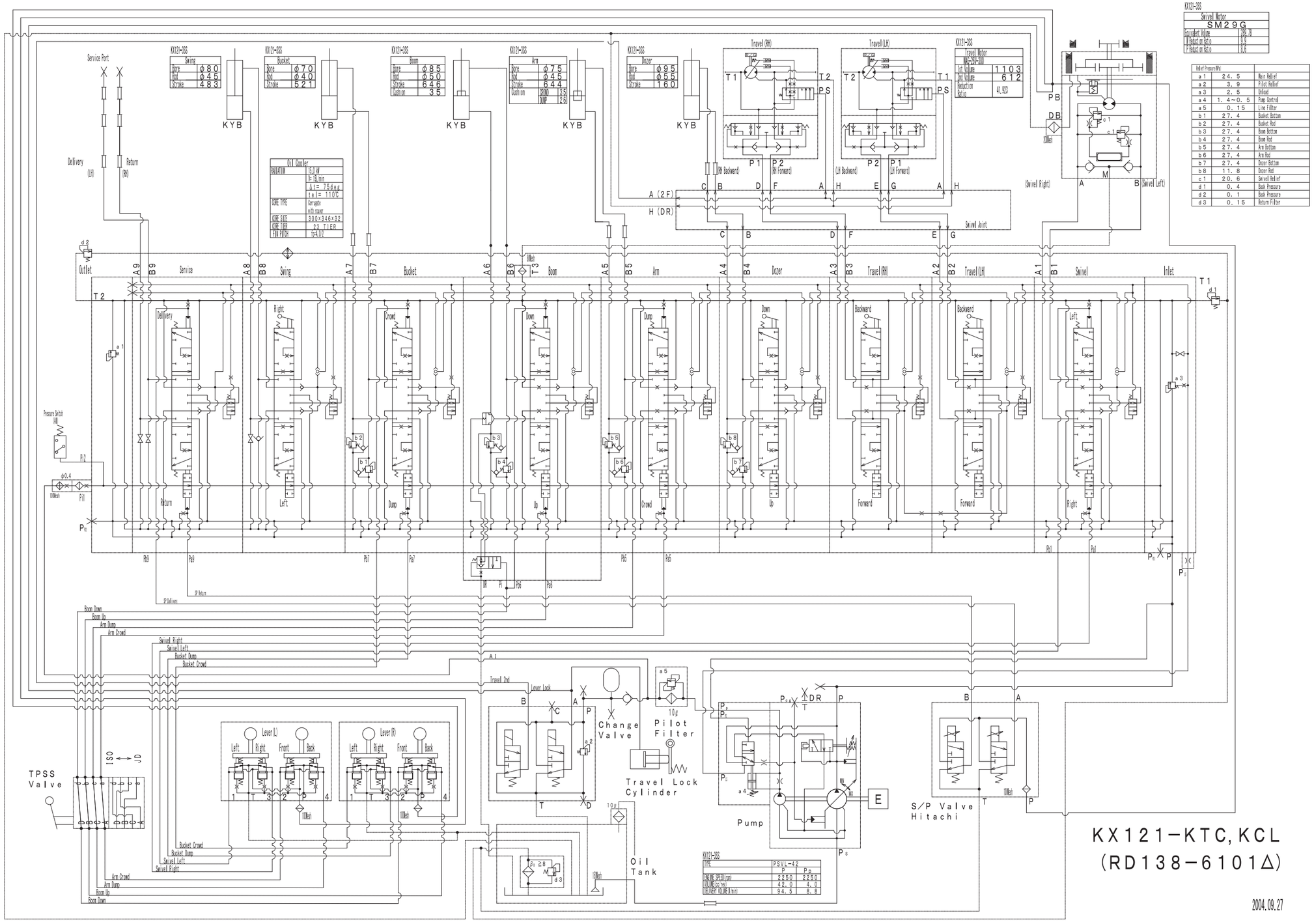

9. KX121-3S: KTA-version

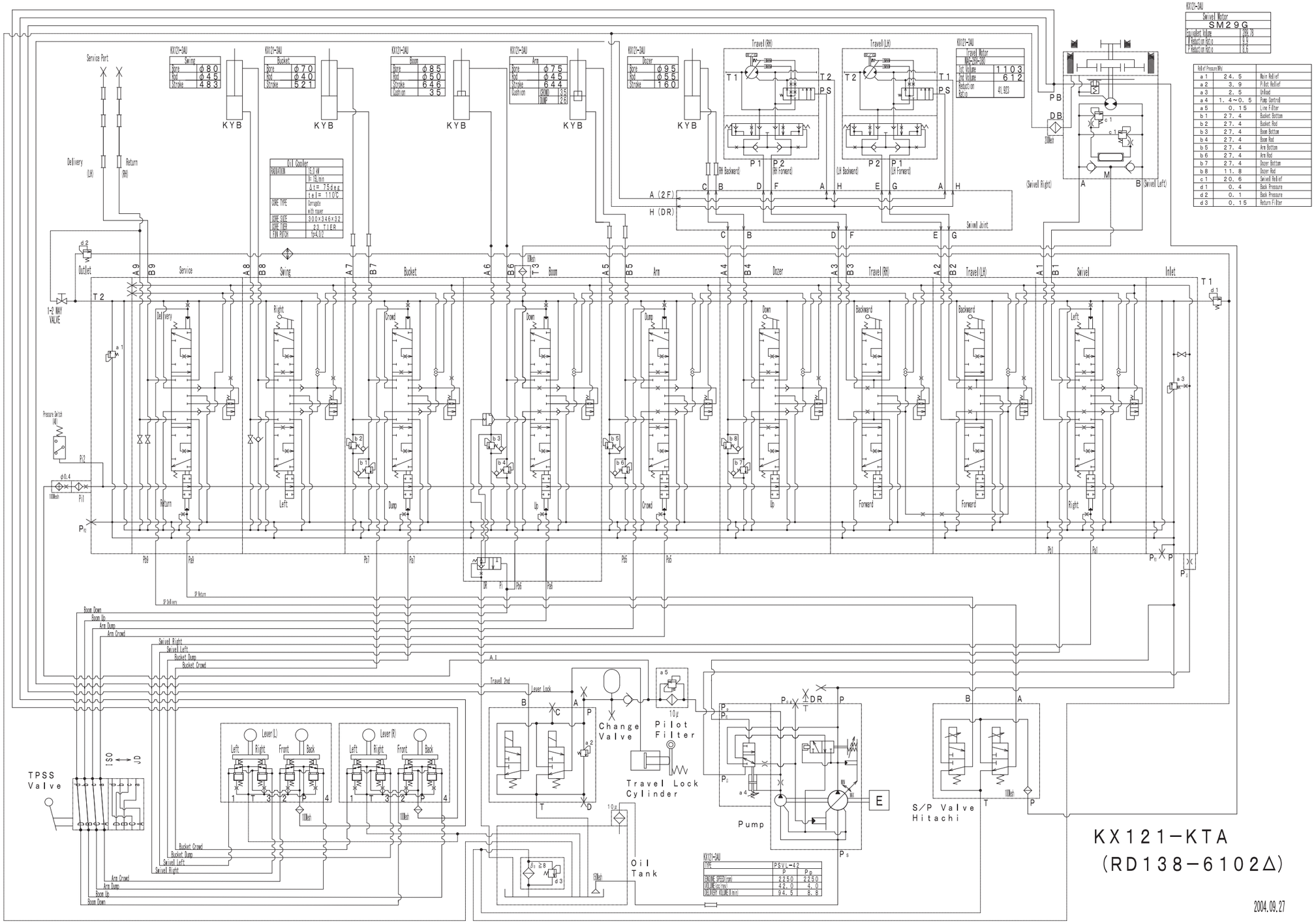

10.KX121-3α: EU-version

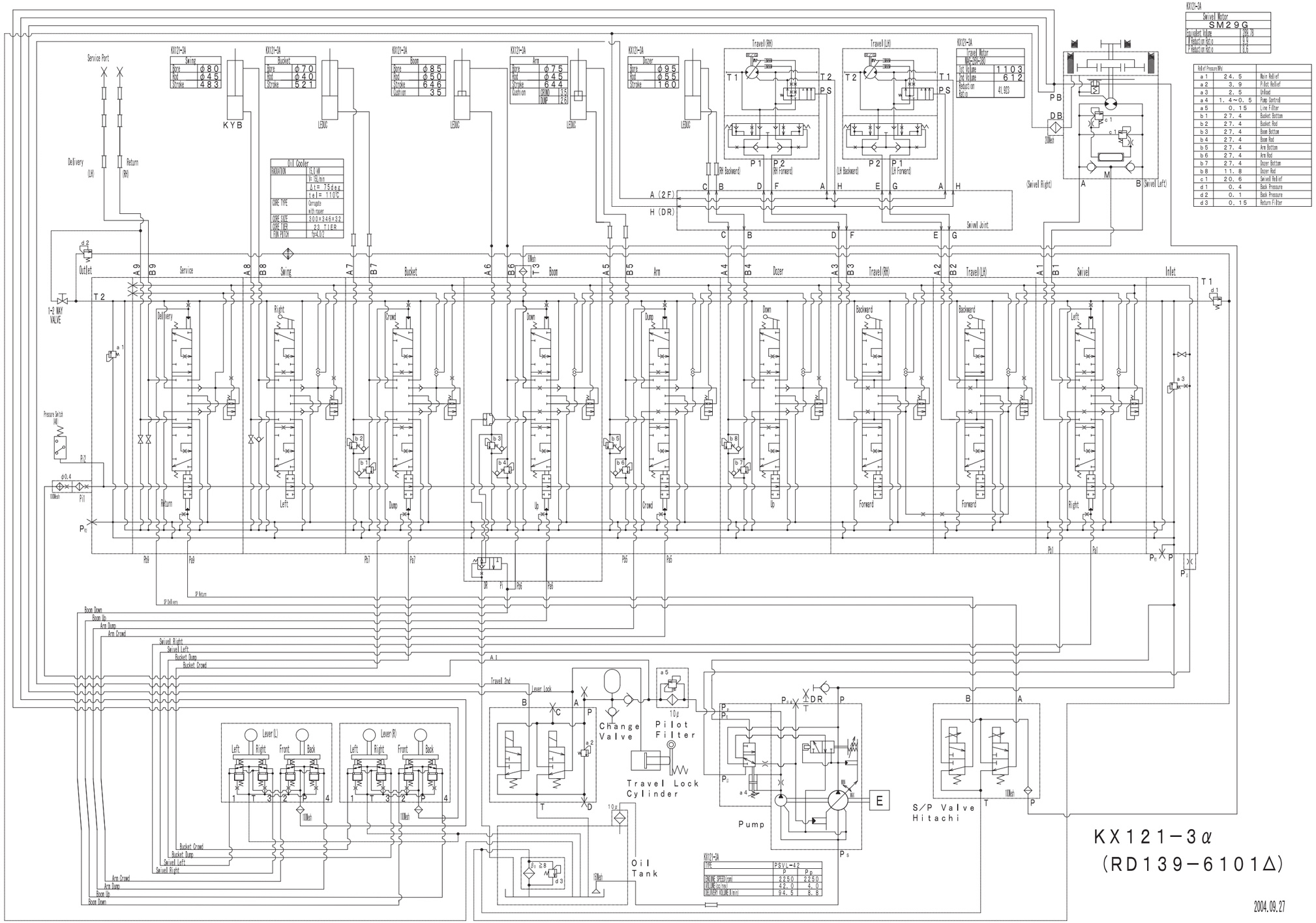

11.KX161-3S: KTC, KCL, KTA-version

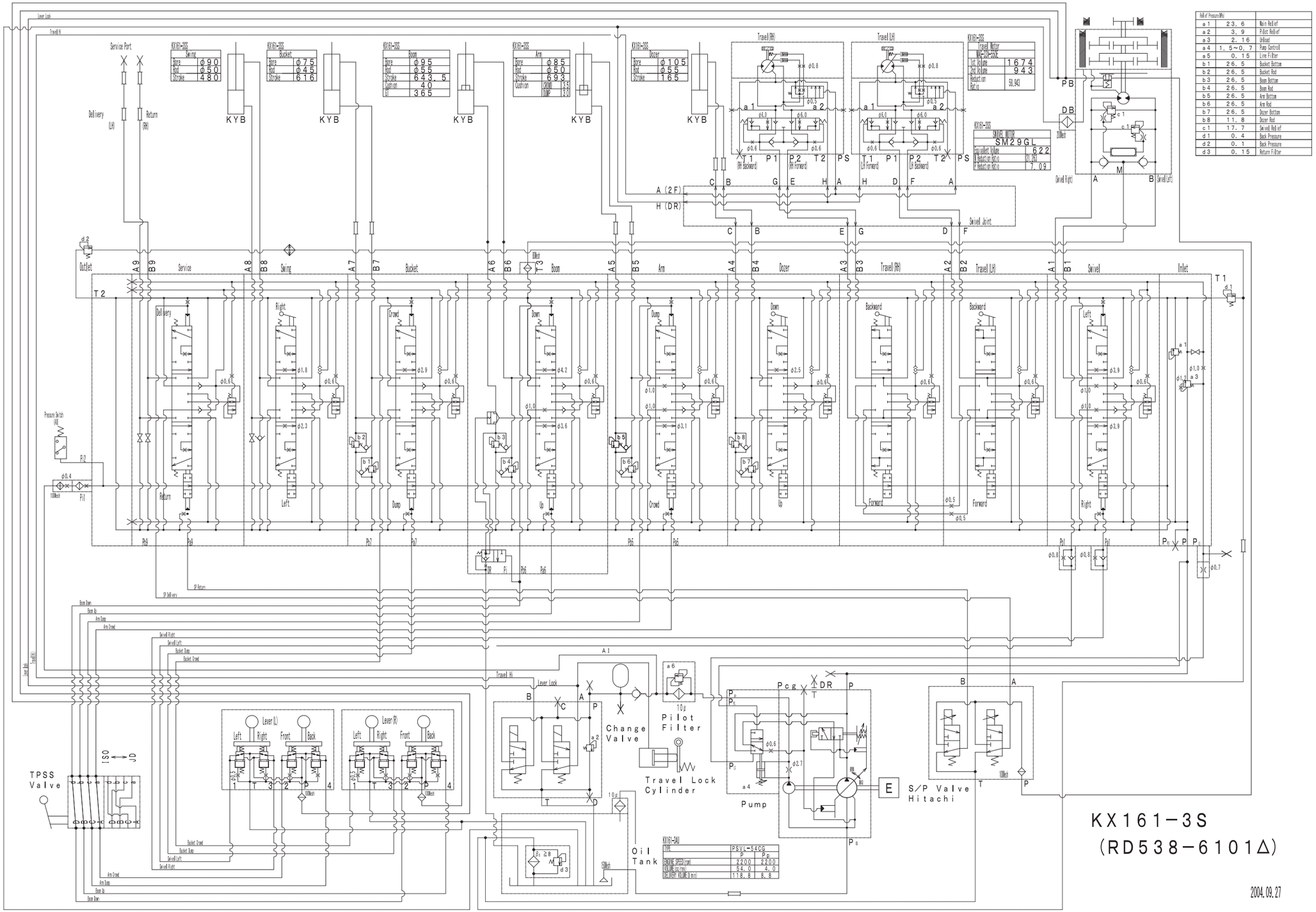

12.KX161-3α: EU-version

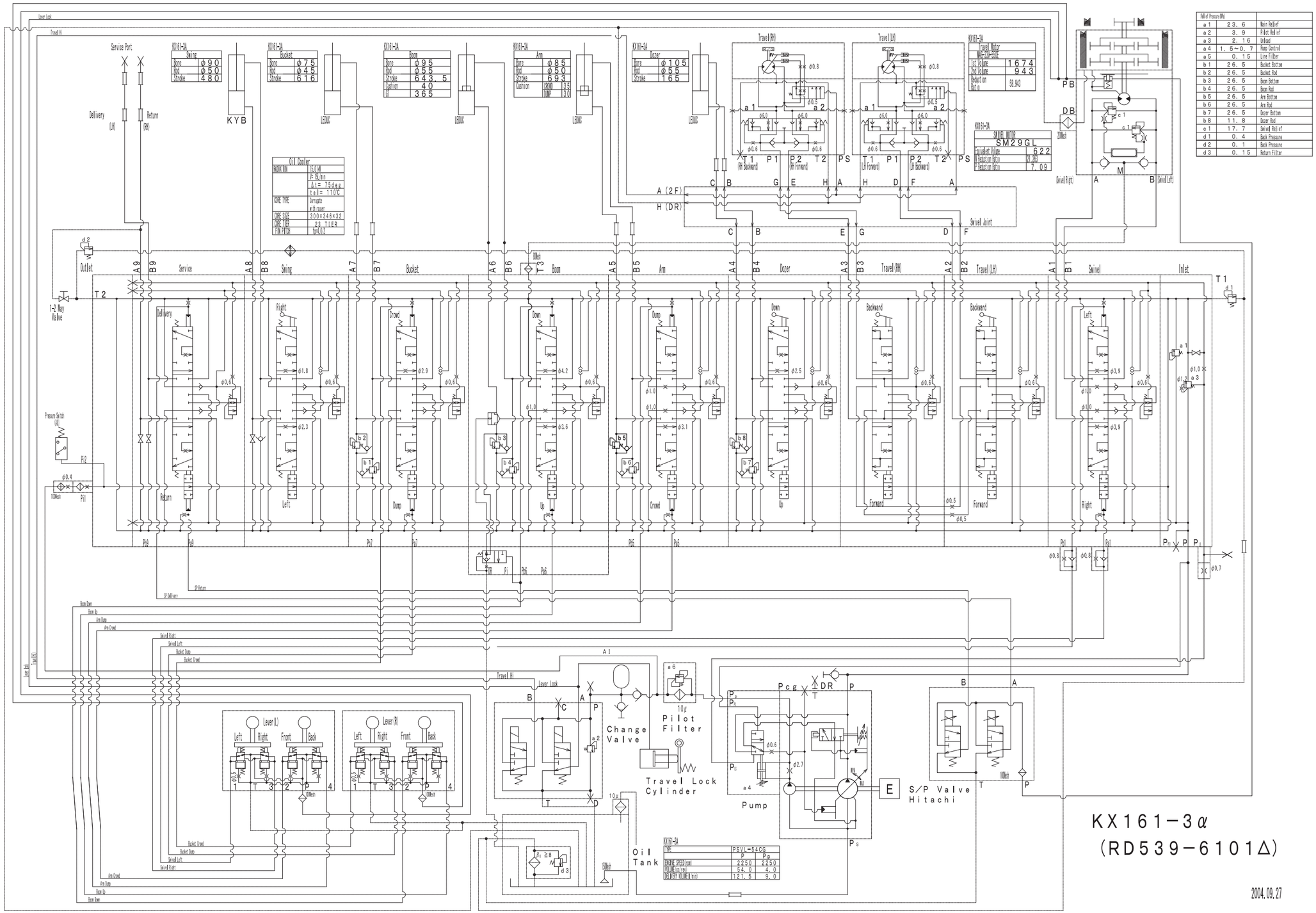

13.U45-3S: KTA-version

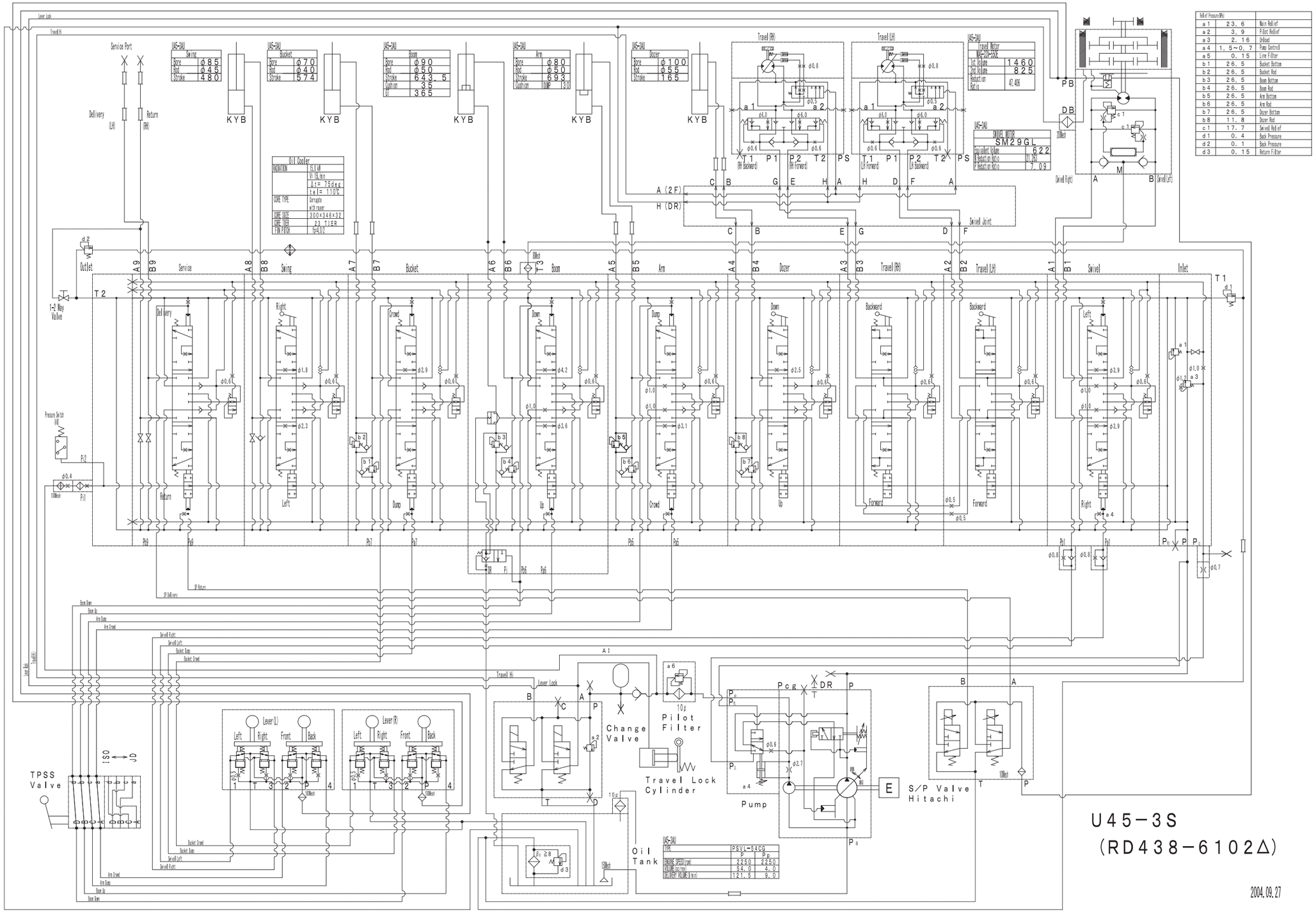

14.U45-3α: EU-version

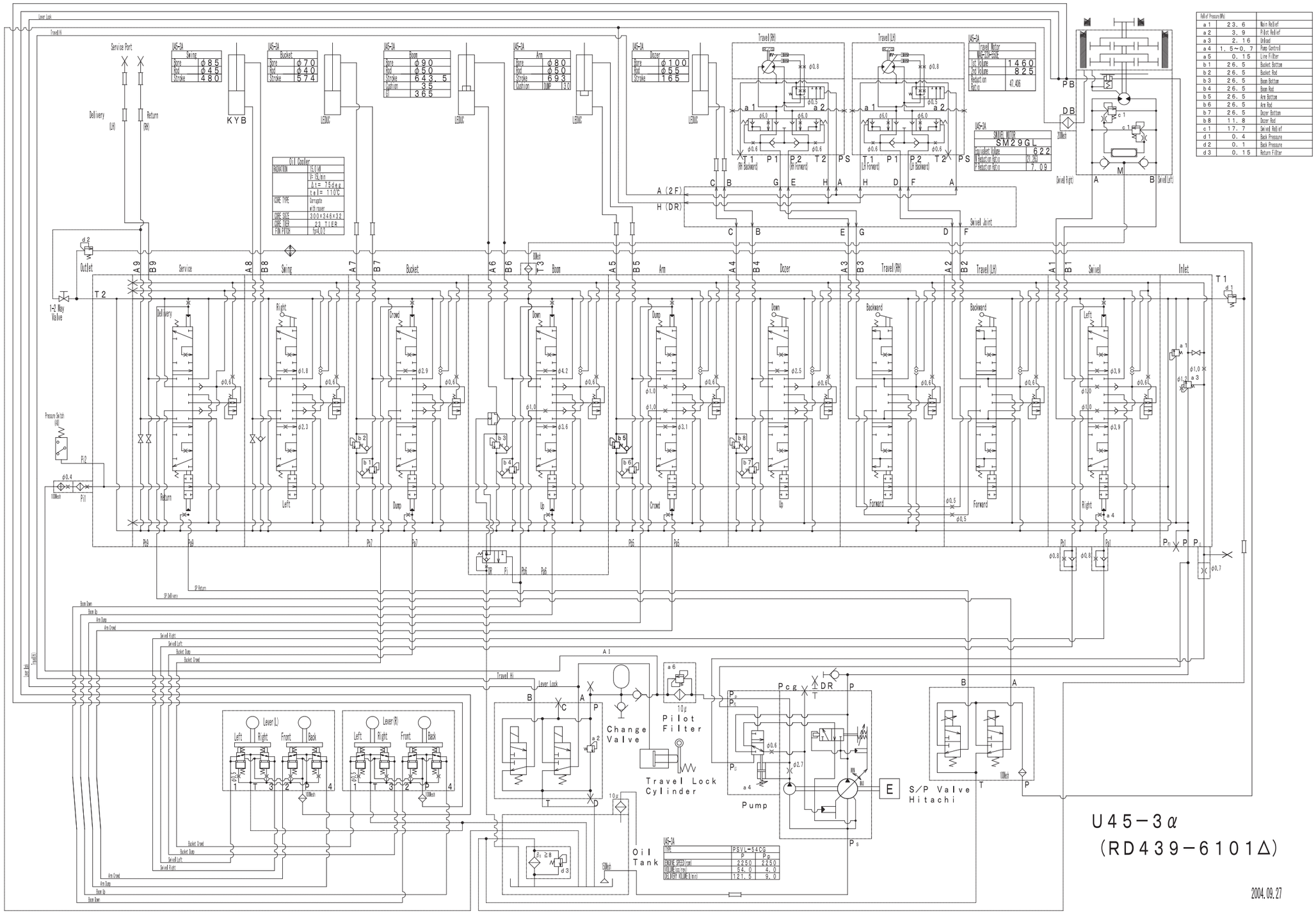

15.Hydraulic components layout: KX91-3S·α, KX101-3S·α, U35S, U35-3S·α

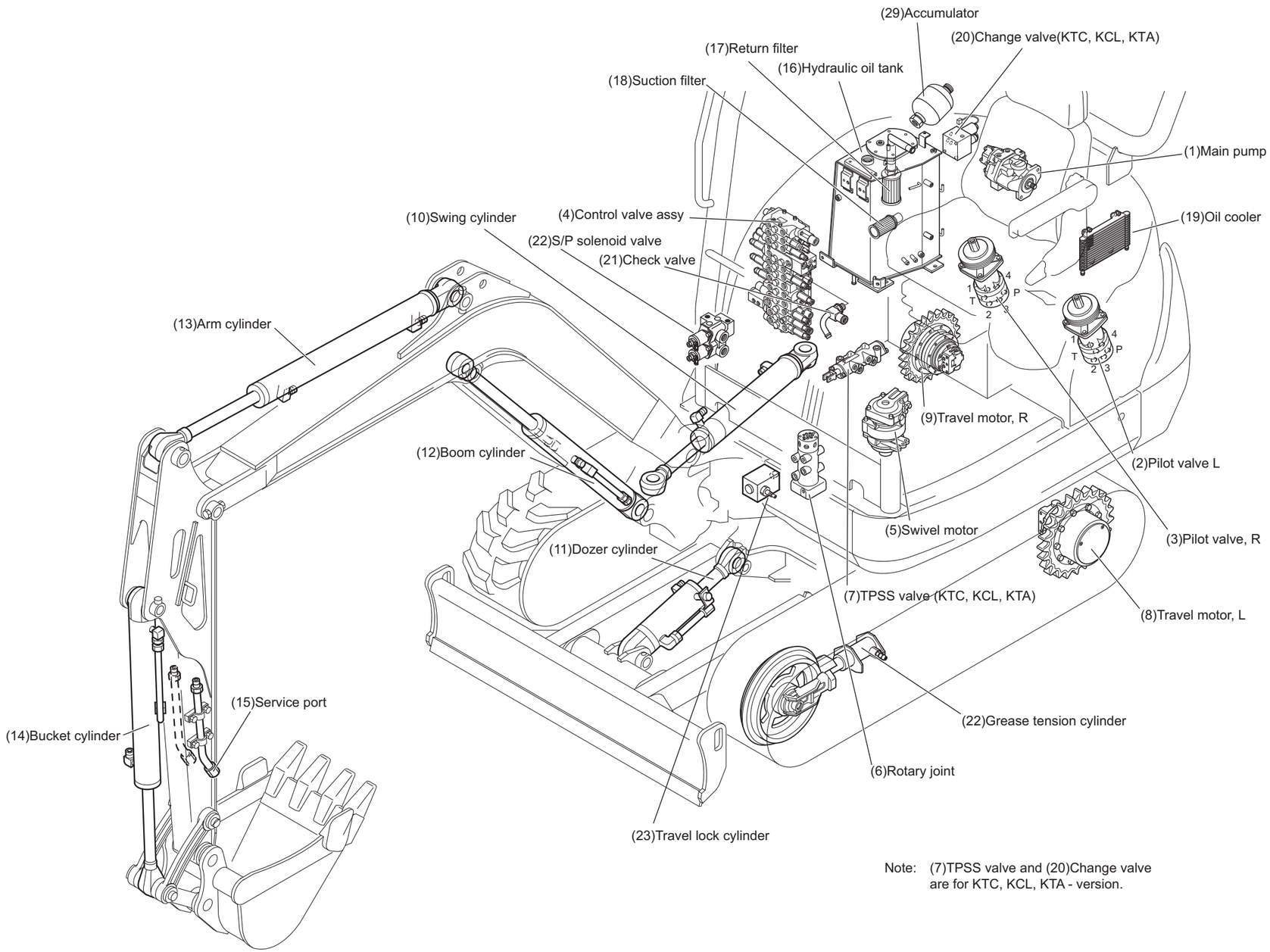

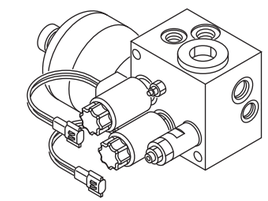

Change valve with accumulator
(EU-version)

Note: (7)TPSS valve and (20)Change valve are for KTC, KCL, KTA - version.

16.Hydraulic components layout: KX121-3S·α, KX161-3S·α

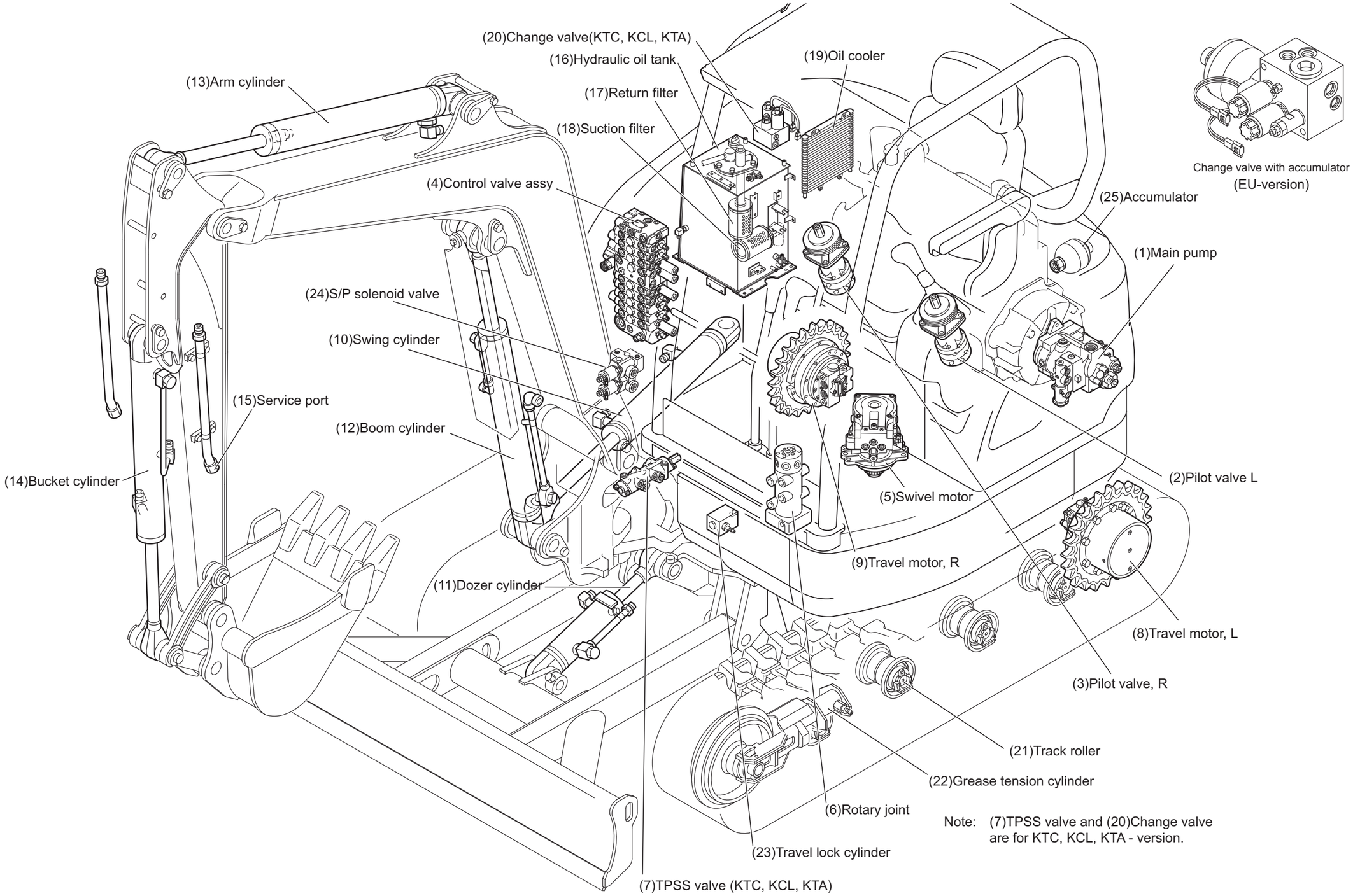

Note: (7)TPSS valve and (20)Change valve are for KTC, KCL, KTA - version.

E. Engine upgrade

a. General

Only the engine of KX161-3S for PP-version (KTC, KCL, KTA) has been upgraded due to the strong market requirement.

b. Engine specifications

		KX161-3
Model		V2403-M-E2BH-1 (Standard-version) V2403-M-E2BH-2 (Air conditioner-version)
No. of cylinder		4
Bore × Stroke	mm	87 × 102.4
	in	3.43 × 4.03
Displacement	cc	2.434
	in^3	148.5
Max. output/rpm(gross)	kW/rpm	32.8/2200
	PS/rpm	44.6/2200
	HP/rpm	44.0/2200
Compression ratio		23.8
Max. torque(gross)	N·m	163.5
	kgf·m	16.7
	ft·lbf	120.6
Dimensions:L × W × H	mm	705 × 511 × 700
	in.	27.8 × 20.1 × 27.6
Dri weight	kg	180
	lbs	396.8
Valve clearance	mm	0.18-0.22
	in.	0.0071-0.0087
Firing sequence		1-3-4-2
Compression pressure (A)/(B)	Mpa	3.53-4.02/2.55
	kgf/cm^2	36-41/26
	psi	512-583/370
Fan belt		REMF6405
Fuel consumption ratio	g/kWh	299
	g/Psh	220
	lbs/Hph	0.49
Fuel consumption	l/h	11.4
	gal/h	3.01
Max.speed without load	rpm	2470ÅÜ
Speed with 2 pumps relief	rpm	ÅH
Speed with idling	rpm	900-950
Engine oil pressure with rated engine rpm	kPa	294-441
	kgf/cm2	3.0-4.5
	psi	42.7-64.0
Injection pressure	MPa	13.7-14.7
	kgf/cm2	140-150
	psi	1991-2133
Engine oil consumption ratio	g/kWh	1.36
	g/Psh	1
	lbs/Hph	0.002

Engine electric components

		KX161-3
Fuel injection pump type		PFR4Mtype mini-pump
Nozzle type		DNOPD mini-nozzle
Injection pressure	Mpa	13.7-14.7
	kgf/cm^2	140-150
	psi	1991-2133
Dynomo		12VÅA540W
Manufacturer P/N		101211-3781
Regulator adjusting voltage	V	14-15
Battery type		90D26R
Nominal capacity of 5hrs rating	Ah	55
Specific gravity of electrolite		1.28Å}0.01
Starter motor		12VÅA2.0KW
Manufacturer P/N		228000-4593
Glow plug	Ω	1

c. Engine performance curve

Model:V2403-M-E2BH-1

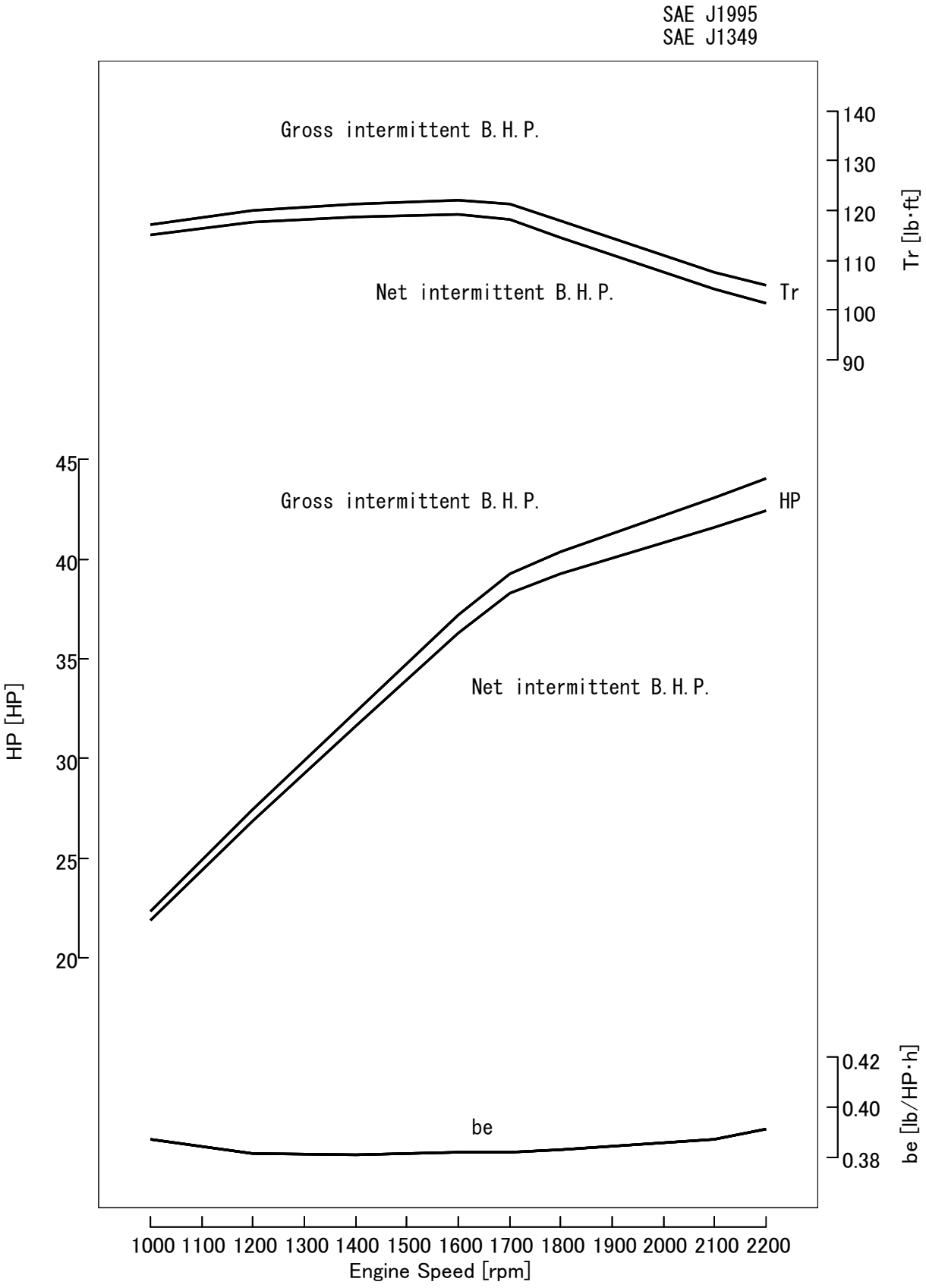

Model:V2403-M-E2BH-1

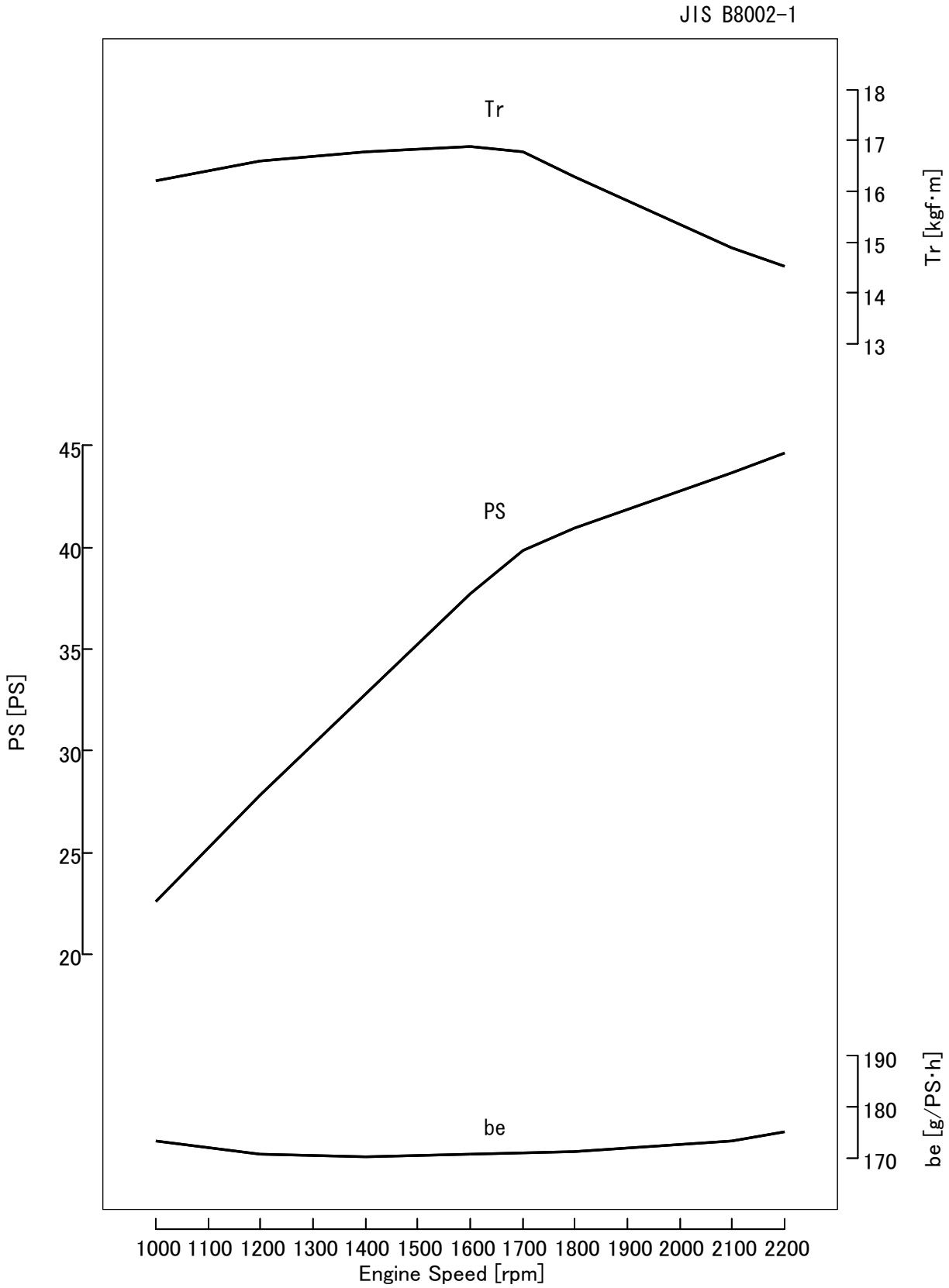

Engine performance of KX161-3 Super Series
V2403 vs V2203

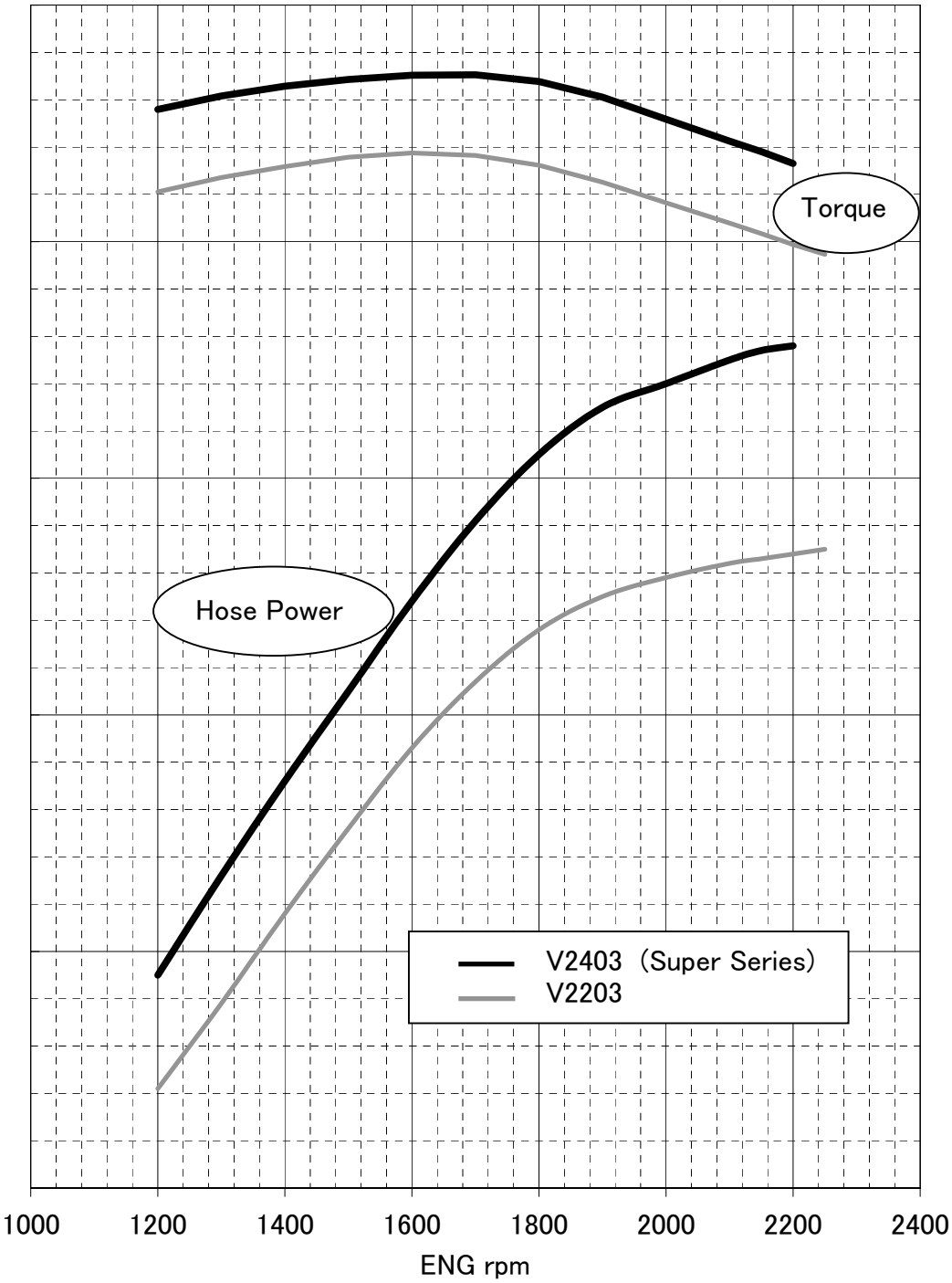

F. Electrical System

a. Development concept II-115
b. Outline of Kubota ICS (Intelligent Control System) II-118
c. Operating Mode II-121
d. Service mode menues II-124
e. New auto idling (AI) control system II-144
f. Main component's function II-159
g. Failure Diagnosis II-166
h. Service mode flow chart II-178
i. Component layout II-185
j. Circuit wiring diagram II-188

a. Development concept

1. Background of Adoption of New Meter

(1) The L1 (3-ton class) Series, which was released in Japan in 1999 for domestic users, adopted a new meter of LCD type (called YUYU NAVI). Since then, this meter has been one of the sales points of the Series.
(2) Presently, the new meter is applied to only models for domestic users. No models for overseas users adopt this meter.
(3) The new meter has a stable reputation for providing advanced performance, convenience, and user-friendliness. This sales point should be added to models for overseas users.
(4) As of 2004, LCD type meter has alrady been incorporated in KX41-3, KX61-3 and KX71-3. Now this meter is going to applied to KX91-3 to KX161-3 and U35 to U45-3 all of models.

2. Features of New Meter

(1) Advanced performance:
Digital display (multi-language support for EU-version), alarm sound, and design performance (see fig. 2 on the right-hand side)
(2) Parts integration:
Relays and controllers supporting a variety of functions for conventional models are integrated into the new meter for space saving and high cost performance. (Relays partly need to be installed externally.)
(3) Functions in a Wide Variety
1. Warning and self-diagnostic functions:
The following items are displayed on the LCD with graphics, failure (warning) numbers, and characters along with an alarm sound.
- Remaining fuel (see fig. 3 on the right-hand side)
- Oil pressure (see fig. 4 on the right-hand side)
- Charge (see fig. 5 on the right-hand side)
- Overvoltage
- Overheating
2. Inspection time instruction function:
"SERVICE HOURS" appears whenever the time has come for the inspection and replacement of the oil filter as explained in the manual, and prompts the user to make an inspection.
3. Fuel replenishment assist function:
The meter beeps intermittently at the time of fuel replenishment, and the interval between beeps is shortened when the tank is almost filled to prevent the fuel from overflowing.
The beep functions with the key turned OFF, but one of the switch needs to be pressed.
4. Service tester function:
This function allows the monitoring of the operation of electrical devices (e.g., an oil pressure switch) connected to the meter and provides the history of failures resulted in the past (see figs. 6 and 7 on the right-hand side).
While in harness manipulation mode, it is possible to diagnose and single out harness components that have internal failures (e.g., contact failures).
5. Other functions
- Low Travel speed reset at the time of restarting the engine (if the engine is turned OFF with high - low switch set to the high range).
- Engine start check (preventing the engine from starting with the lever unlocked).
- Starter motor automatic disconnection → Auto release
- Auto glow
- Built-in hour meter and display
- Built-in tachometer and display
6. Expansion function for this minor change : KX91-3, 101-3, 121-3, 161-3, U35, U35-3, U45-3
- Monitoring with theft prevention set up (EU-version only, optional)
- Service port (thumb) hand-held proportional control
- Air-conditioner idling control
- Auto idling

(Reference) LCD Display Examples of New Meter

Fig. 1
Normal screen

Key switch ON (Only the glowing moment)

Normal screen (with the tachometer selected)

Normal screen (with the hourmeter selected)

Fig. 2
Language selection screen
(KCL-ver)

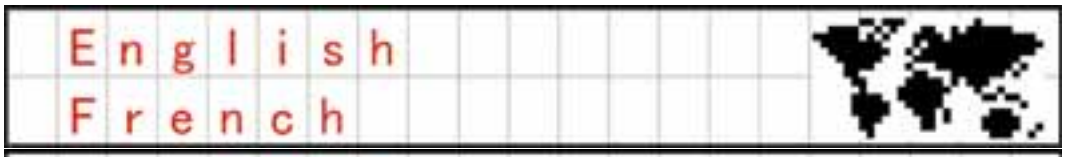

Fig. 3

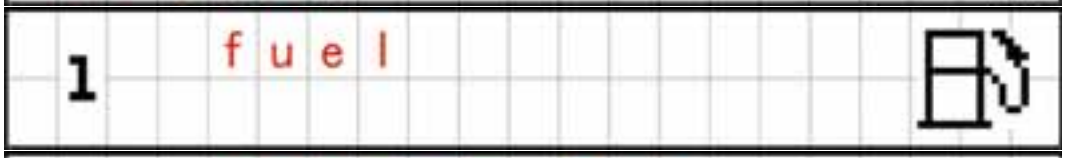

Fig. 4

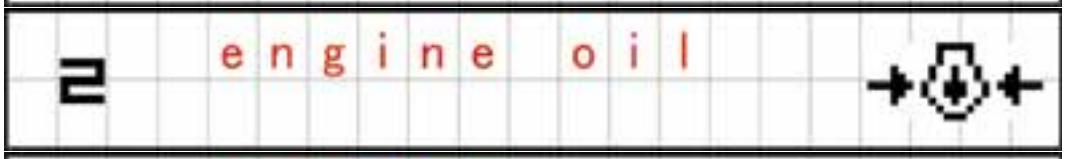

Fig. 5

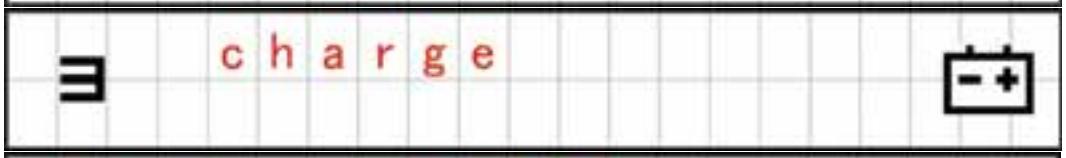

Fig. 6

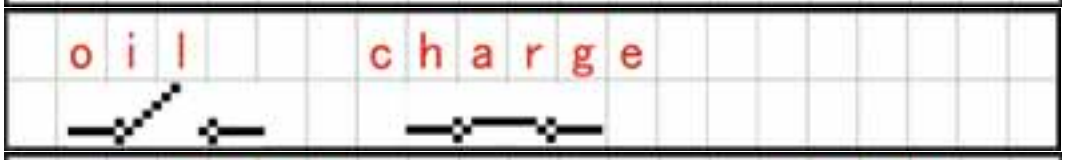

Fig. 7

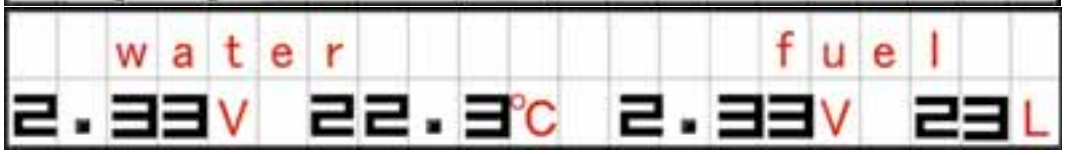

3. Electrical system : Functional comparison
: KX91-3S·α, 101-3α, 121-3S·α, 161-3S·α, U35S, U35-3α, U45S·α

No.	Function	EU-version	North America & Oceanea
1	KICS;Kubota Intelligent Control System, LCD(liquid crystal display) with character and illustration	Yes	Yes
2	Maintenance indication upon hour meter	Yes (delete method:manual)	Yes (delete method:auto)
3	Anti-theft system	Yes (sample, date not fixed)	No
4	AI(Auto idle) function	Yes	Yes
5	Engine overheat warning	Yes	No
6	Starter motor auto release function	Yes	Yes
7	Glowplug auto glow function	Yes	Yes
8	Travel high-low switch at dozer lever grip	Yes	Yes
9	Fuel feed assist sound	Yes	Yes
10	Heater	Yes (cab version)	Yes (cab version)
11	Rotating lamp	Harness and switch are equipped as standard	Harness is incorporated
12	Service port (thumb) finger - control	Yes	Yes
13	Air - conditioner idling control	Yes	Yes
14	Low temp. idle up control	Yes	Yes
15			

b. Outline of Kubota ICS (Intelligent Control System)

Feature of LCD Navigation System①

(K.I.C.S. : Kubota Intelligent Control System)

①Advanced Feature

- Digital display (Multi language),
  Design
  Alarm sound

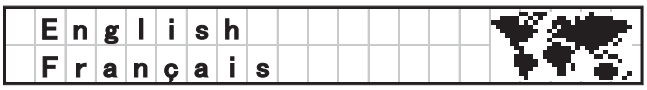

②Integrated function

- Space saving, High Cost performance

③Additional function

- Convenient function by Easy operation.

Feature of LCD Navigation System②

Additional function

(1) Normal display

Key sw ON

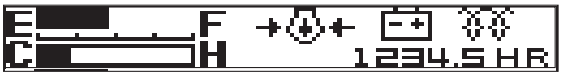

Normal display
- Hour metor
- Tachometer

Feature of LCD Navigation System②

Additional function

(2)Warning & failure

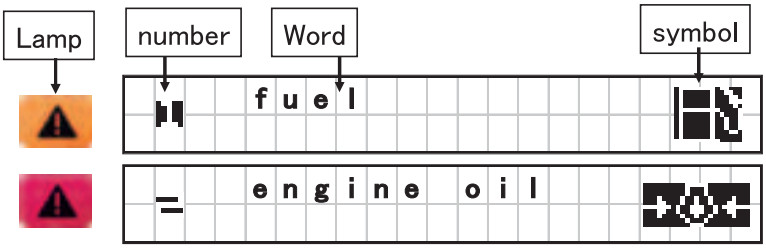

The number is coordinated with the manual.

Feature of LCD Navigation System③

Additional function

(3)display of service maintenance time

[Remind check schedule of service]

10 seconds after key switch on then message disappear, and 10 times key switch off ,this message is terminated.

(North America & Oceania – version)

As for EU – version, this message should be deleted manually by pressing the work lamp switch for 3 seconds.

Feature of LCD Navigation System④

Additional function

(4)Refueling assistance

Prevents Fuel Overflow.

[Specification]

Buzzer sound changes according to fuel level.

pi___pi___ → pi_pi_pi → pi----------

Push with key off.

And this function starts.

Feature of LCD Navigation System⑤

Additional function

(6) The serviceman's support function.

Repairing time becomes shorter.

(for example)

・Tester Function

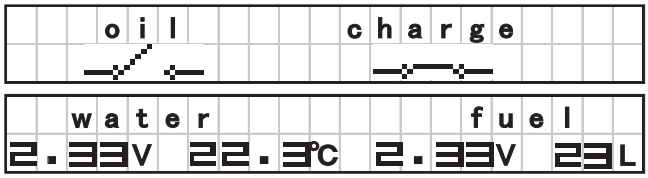

・Fail record

c. Operating Mode

1. Outline

In operating mode, normally LCD shows three types of information.

1) Key switch ON,
2) Normal display, hour meter
3) Normal display, tachometer

Feature of LCD Navigation System①

Additional function

(1) Normal display

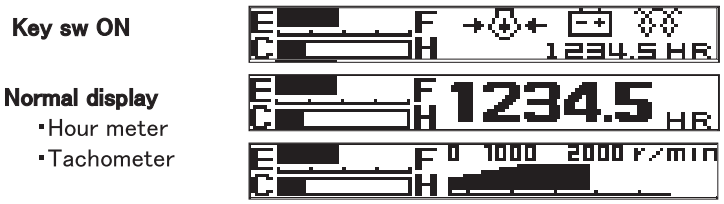

When in trouble, LCD shows warning and failure indications as shown below.

Feature of LCD Navigation System②

Additional function

(2)Warning & failure

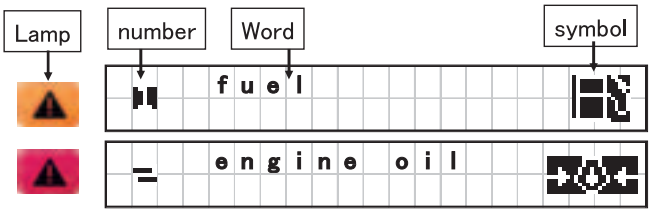

The number is coordinated with the manual.

In the following list, item No.1, 2, 3, 4, 5, 11, 12, 13, 14, 21, 22, 23, 24, 25, 51, 52, 53, 54, 55, 61, will be indicated according to the machine conditions.

2. LCD display list

Below list shows all LCD letter indications for both oparating mode.
In operating mode, data 003 ~ 022 and 082, 084 will be on the display according to the machine condition.
In case of non AI, non S/P control machines, date 008 ~ 022 except 017, 018, 019, 020, 021 won't come up to show.

<Operating mode menu list>

name	English	meaning and explanation
data000	E F C H 1234.5 HR	This LCD display shows the following conditions;fuel amount, water temp., engine oil pressure, battery, glow plug, and operating hour meter.
data001	E F C H 0 1000 2000 r/min	This LCD display shows the following conditions;fuel amount, water temp., engine speed.
data002	E F C H 1234.5 HR	This LCD display shows the following conditions;fuel amount, water temp., and operating hour meter.
data003	1 Fuel	The letter on the LCD indicates the warning of each function;fuel amount shortage
data004	2 Engine oil	The letter on the LCD indicates the warning of low engine oil pressure
data005	3 Charge	The letter on the LCD indicates the warning of low charging voltage of alternator
data006	4 High voltage	The letter on the LCD indicates the warning of each function; higher voltage line connected for example, 24 V battery
data007	5 Overheat	The letter on the LCD indicates the warning thepossibility of engine overheating condition EU - version only : 124 ± °C
data008	11 Accel sensor	The letter on the LCD indicates the warning ofaccel sensor line break or shortage
data009	12 Governor sensor	The letter on the LCD indicates the warning of governor sensor line break or shortage
data010	13 AI motor short	The letter on the LCD indicates the warning of AI motor line shortage.
data011	14 AI motor break	The letter on the LCD indicates the warning of AI motor line break.
data012	21 S/P control	The letter on the LCD indicates the amount of auxiliary port flow.
data013	22 S/P Solenoid L short	The letter on the LCD indicates the warning of electrical shortage of aux. solenoid valve left side.
data014	23 S/P Solenoid L break	The letter on the LCD indicates the warning of electrical line break of aux. solenoid valve left side.
data015	24 S/P Solenoid R short	The letter on the LCD indicates the warning of electrical shortage of aux. solenoid valve right side.
data016	25 S/P Solenoid R break	The letter on the LCD indicates the warning of electrical line break of aux. solenoid valveright side.
data017	51 Coolant sensor	The letter on the LCD indicates the warning of coolant sensor or water temp. sensor fail.
data018	52 Fuel sensor	The letter on the LCD indicates the warning of fuel sensor fail.
data019	53 Sensor supply short 12V	The letter on the LCD indicates the warning of 12V sensor supply line shortage.
data020	54 Sensor supply short 5V	The letter on the LCD indicates the warning of 5V sensor supply line shortage.
data021	55 Meter controller error	The letter on the LCD indicates the warning of controller error in the meter panel.
data022	61 AI motor retricted	The letter on the LCD indicates the warning of AI motor being restricted by any means.
data082	Made in Japan Made in Germany	These indicates where machine was manufactured.
data084	31 Lift up unload lever	This indicates that operator is suggested to lift up unload lever(safety lock lever).

Caution and warning indications

(1) Lift up the lock lever to start engine

(2) At key on position

(3) In case oil sw and charge lines broken

(4) Fuel shortage

(5) Battery charge warning

(6) Engine oil pressure warning

(7) Lift down the lock lever for service port sw function

(8) Maintenance indications

d. Service mode menues

1. Outline

Service mode is basically for dealer's service personel.
This mode is so designed to initialize machine's condition, additional attachment and control system. and also diagnose machine trouble. Display indication items are listed in page II-140 and II-141, from data number 023 ~ 085.

Following pages include ;
1) Service mode flow chart
2) Main menues in detail

2. Service mode flow chart

How to enter the service mode;

1. While pushing the display select switch.

2. Turn the main key switch to ON position.

3. Then you are in the service mode.

3. Main menues and functions

3-1 Selection Method of 11 Languages (EU-version only)

If the key is turned ON with the display selector pressed, the name of the model presently selected will appear. When the finger is off the display selector, the next language selection screen will appear. The information on the selected model is important. Therefore, this method enables the confirmation of the model first.
As explained above, the system is designed to support 11 languages, and the language selection screen will appear first. (See fig.)
The selection screen of the 11 languages is written in each of the languages as shown in figure. When a language is selected, a display corresponding to the language will appear.

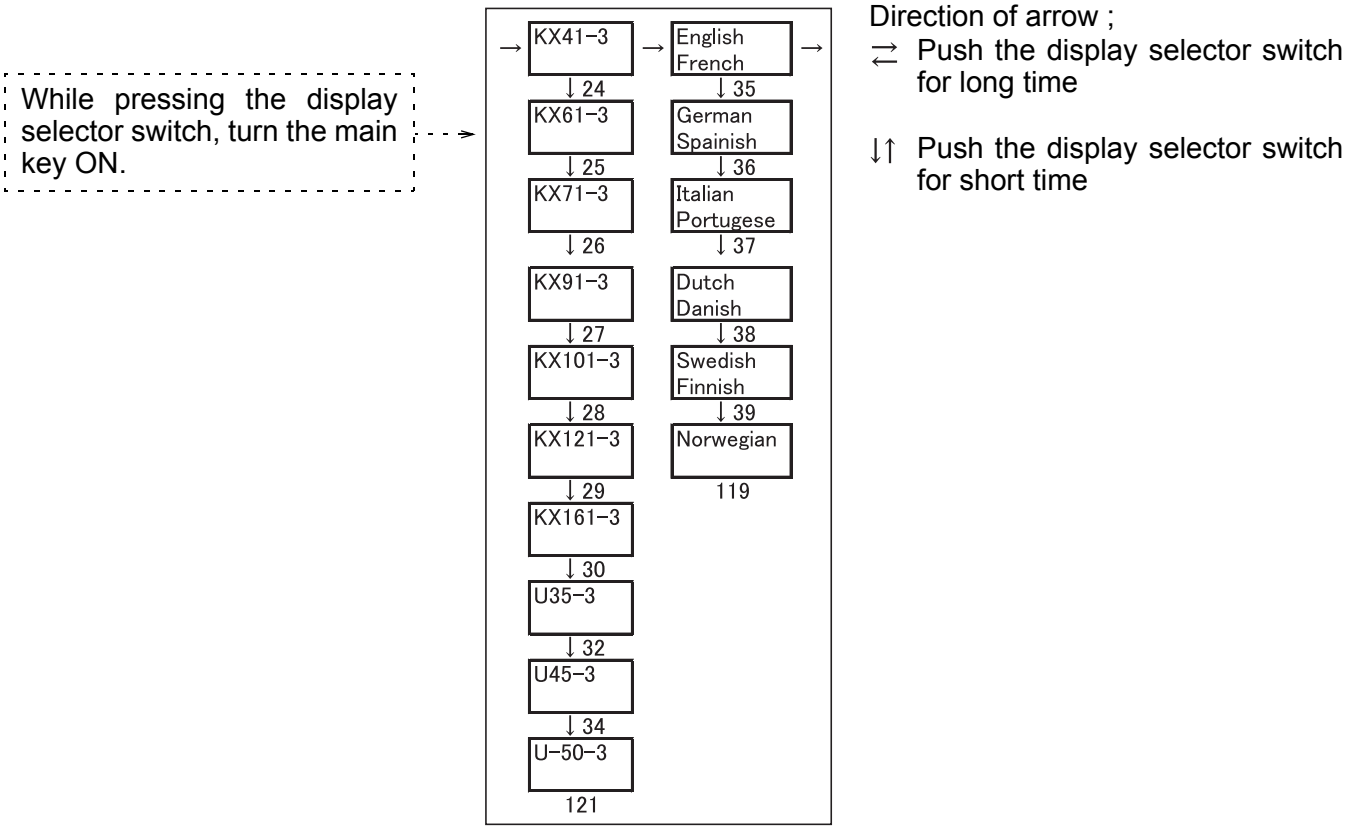

Fig.1. Service Mode Language Selection Screen
(EU-version)

KTC, KTA-version :
Only English language is available.

KCL-version
English and French languages are possible to select.

3-2 Tester mode

Items such as the present battery voltage can be displayed by selecting Diagnosis and Tester. (See fig. 2.)

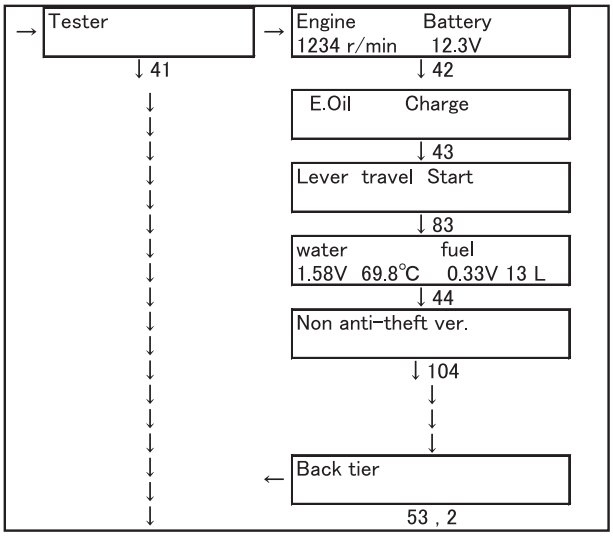

(Without AI)

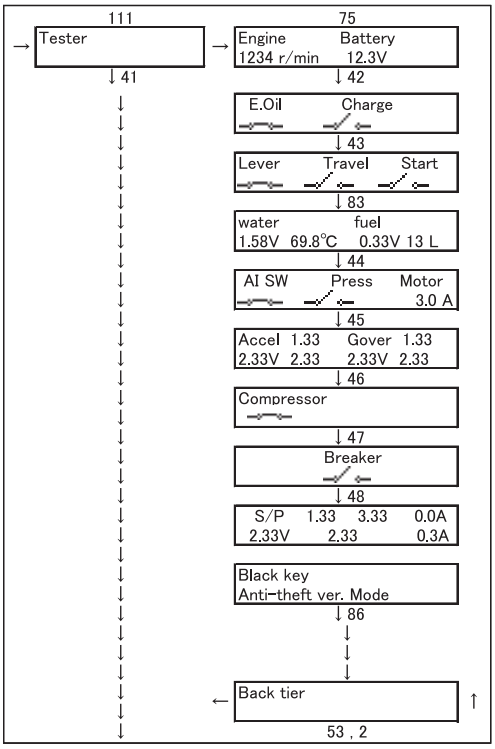

(AI)

Fig.2. Tester menu

- Engine -> Engine revolution XXXX rpm
  A revolution sensor is mounted to the injection pump gear.
  The gear ratio varies with the model as described below.
  KX41-3's gear ratio: 46
  KX61-3 and KX71-3's gear ratio: 54
  KX91-3S·α, KX101-3α, KX121-3S·α, and KX161-3S·α gear ratio: 68

Calculation Method

A single rotation of the injection pump corresponds to two engine rotations.
The revolution of the engine is calculated by measuring the passing period of the number of gear tooth specified by the timer and obtaining the revolution under the same condition for 60 seconds.

- Battery: Battery Voltage
  The battery voltage is input into the meter through two diodes. Therefore, the voltage displayed is added with 1.4 V in consideration of the potential drop caused by the diode.
- E. oil: Engine oil switch ON and OFF.
- Charge: Alternator L terminal ON and OFF.
  These switches are turned ON with the engine stopped and turned OFF with the engine started while in normal operation.
- Lever: Lever lock.
- Trave: Running in second gear.
- Start: Start position of key switch.
- Water: Water temperature voltage and water temperature (C).
- Fuel: Fuel voltage and fuel quantity (in liters).
  The quantity of fuel (in litters) displayed is a reference value.
  The fuel (in liters) is displayed from data measured according to the model.
- Non anti-theft ver.: Not connected to theft prevention ECU (i.e., no communication is possible with the theft prevention ECU).

3-3 Fail recoord dump

The fail record can be displayed by selecting Diagnosis and Fail record. (See fig. 3.)

By selecting the Fail record, the system reads the contents of the EEPROM and checks the information on failures.
If failures are found, each failure item and the number of times on the hour meter can be scrolled at 1.5-second intervals.
By pressing the display selector just once, the next failure point can be viewed.
If there is no failure, "No fail record" will be displayed.
(See the Section of Fail Safe for failures in detail.)

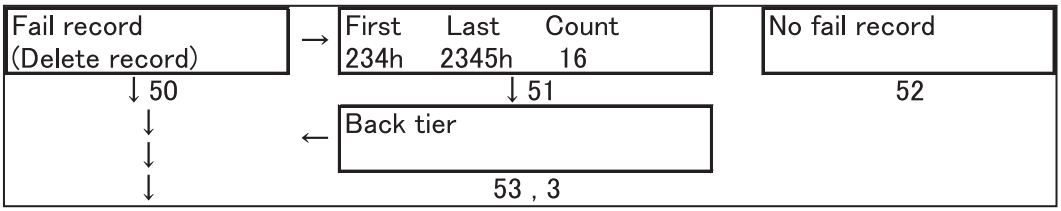

Fig. 3 Fail record dump

3-4 Deletion of Fail Record

The fail record can be deleted by selecting Diagnosis and Delete record. (See fig. 4.)

The message "Fail record deleted" will be displayed when the record is deleted.
By pressing the display selector while this message is displayed, the message to read the fail record will appear again. The message to read the fail record will, however, appear automatically in 3 seconds without pressing the display selector.

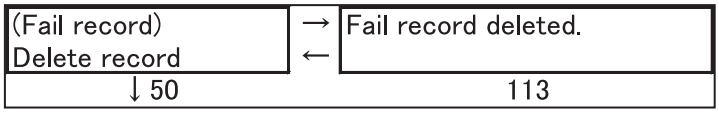

Fig. 4 Fail record delete

3-5 Machine model setup

Model settings can be made by selecting Set up and Set up machine. (See fig. 6.)

Here, information on the model and the country of manufacturer is selected.
By selecting the country of manufacturer, European specifications and North American specifications are distinguished.
(If AI optional specifications are provided, the selection of AI as an optional item will appear as well.)

Fig.5 Machine model setu-up

Note:
By selecting the country of manufacturer, optional functions attached to the country - version, such as the overheating and service auto manual items can be determined automatically.

(Without AI)

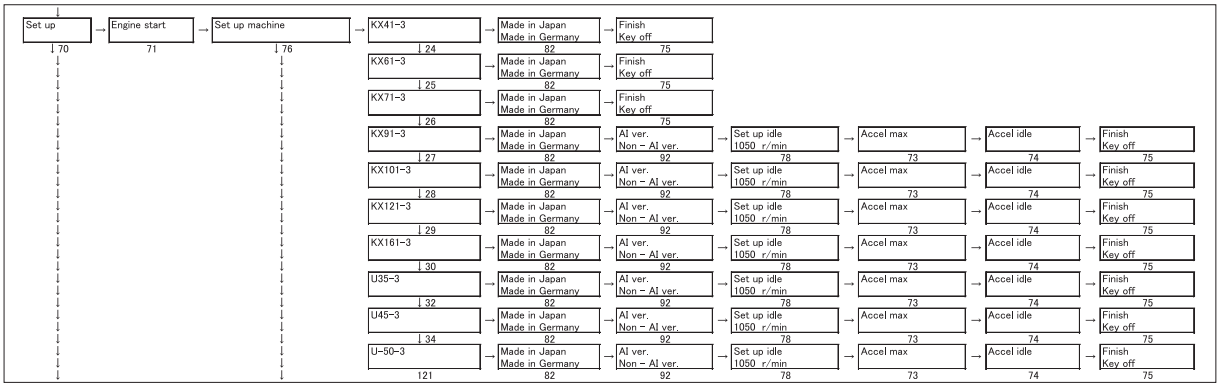

(AI)

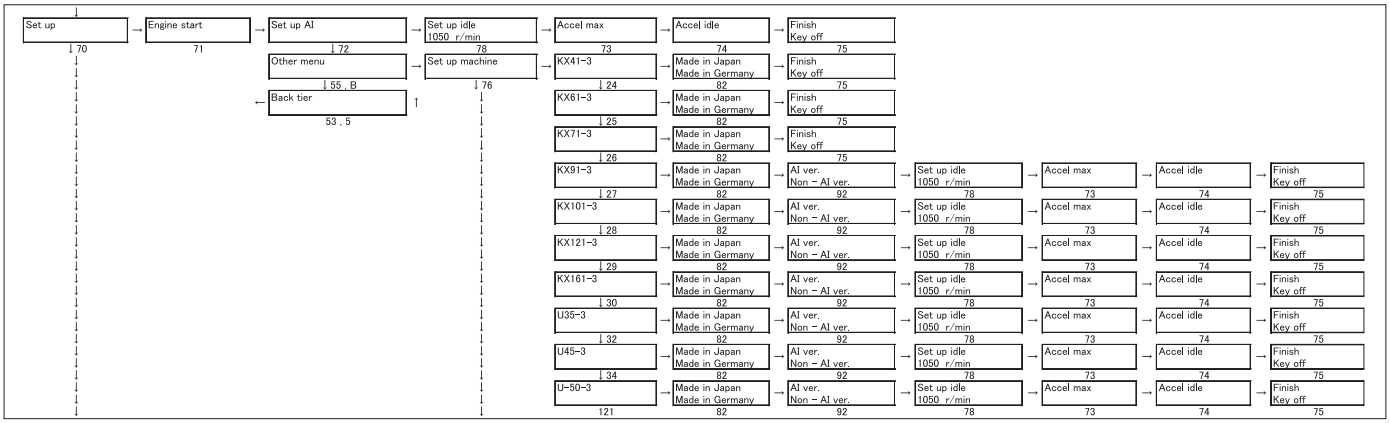

Fig.6 Machine model set-up

3-6 Overheat set-up

Note:

By selecting Diagnosis, Set up, Engine start, Set up machine, and Set up overheat warning, overheat warning settings can be made.

By turning the overheat warning ON, the overheating warning function will be enabled and the overheat warning will be output when the preset temperature is reached.
The preset temperature can be adjusted in 10 C increments or decrements.
The value will be negative with the working lamp switch turned ON and positive with the center switch turned ON. The entered value will be determined with the display selector continuously turned ON.

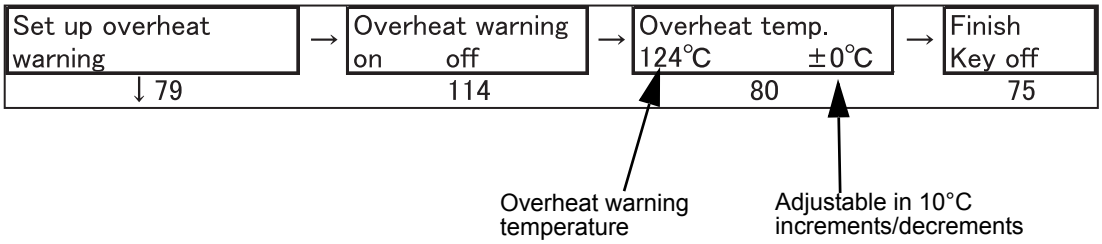

Fig. 7 Overheat Settings

In default condition, Overheat warning is OFF for North America and Oceania - version and ON for EU - version.

3-7 Simple mode set-up --- Chinese-version only

Simple-mode settings can be made by selecting Set up, Engine start, Set up machine, and Simple mode.

While in simple mode, the output will be turned OFF when the fail-safe function is activated, but no messages will be output. The fuel replenish mode will not be available.
No messages for failures including engine oil failures will be output while in simple mode. In this case, the hour meter cannot be switched over to the tachometer while in normal mode. Therefore, only the hour meter will be displayed. The reason is that the tachometer does not display the engine oil icon.
This meter is used for the U-50-3 meter for China, but the U-50-3 meter for China is shipped with a factory setting made to simple mode.

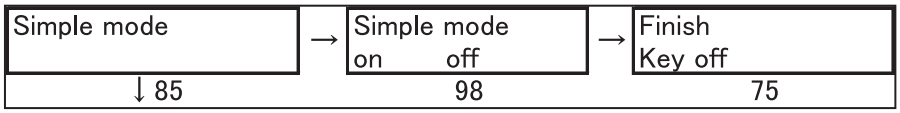

3-8 Harness check Mode

By selecting Other menu and Circuit check Engine stop, the present conditions of the harness connector can be checked (See fig. below.).

When the Circuit check Engine stop is selected, the message "Checking touch harness" will appear at the moment the engine revolution drops below 800 rpm. This mode is available on the condition that the engine is stopped. The mode cannot be selected when the engine revolution is 800 rpm or over.

While in harness check mode, the following items can be checked. Items in parentheses are error criteria.

- Lever lock switch (OFF When lever is down).
- Fuel sensor (Reading of 2 V or more, or 0.2 V or less.).
- Water temperature (Water temperature of 140 C or more, or -30 C or lower.).
- Oil switch (OFF When engine stops and Key is ON).
- Charge circuit (OFF).

If there is any error, a message indicating the position of the error will flash automatically. Simultaneously, the buzzer will beep.
When the error is restored, the buzzer will be turned OFF, but the flashing memory will be kept on hold.
If there are a number of errors, the screen will scroll.

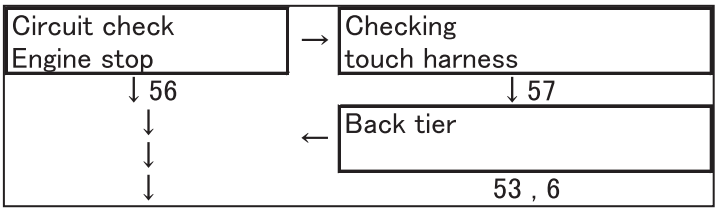

3-9 All Fail Record

All the accumulated failure records can be shown by selecting Other menu, Other menu, and All fail record (See Fig.6.).

By selecting All fail record, the first hour meter items generated after shipping through the last one will be shown.
There are 19 types of failure diagnostic items, and the details of each type of item can be checked. The hour meter will, however, remain even after the failure records are deleted.

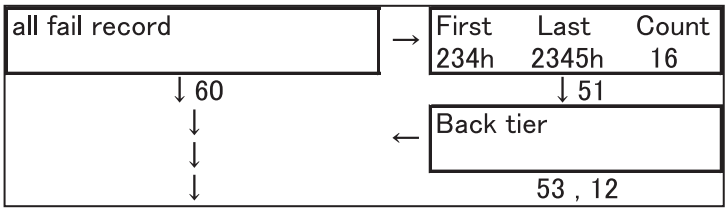

Fig.6 All Fail Record

3-10 EEPROM read

The data of the EEPROM can be checked by selecting Other menu, Other menu, and EEPROM read. (See Fig.7.)

Ten items are displayed on each page in hexadecimal, and 13 pages will be used in total.
The EEPROM consists of 128 x 16 bits.

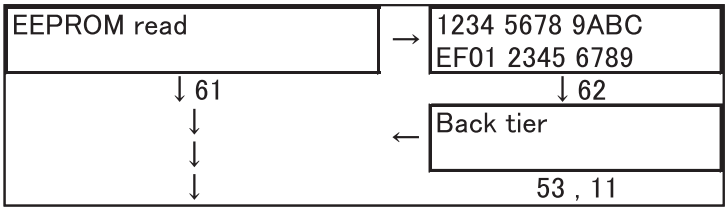

Fig.7 EEPROM read

3-11 LCD inspection

The dot type of the LCD can be checked by selecting Other menu, Other menu, and LCD check. (See Fig. 8.)

Checkered pattern 1, checkered pattern 2, and the outer frame will be displayed. Checkered pattern 1 and checkered pattern 2 are opposite to each other in dot ON-OFF pattern. Missing dots can be checked by using this function. (See Figs.9 and 10.)

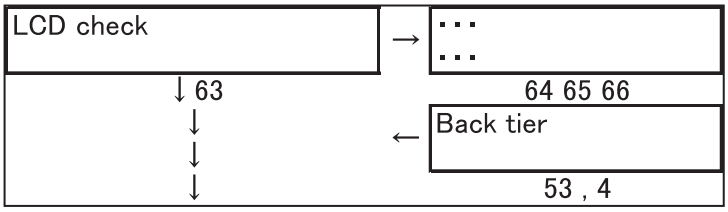

Fig.8 LCD check

Fig.9 Frame Display

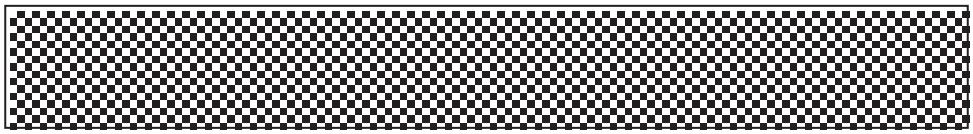

Fig.10 Checkered Pattern

3-12 Service hour meter

A service maintenance message will appear when the preset hour meter item is activated.
The message will disappear in 10 seconds. Hereafter, whenever the key is turned OFF and ON, the message will appear for the first 10 seconds.
There are two modes (i.e., auto mode and manual mode) to turn OFF the inspection icon perfectly, either of which is selectable by the user's settings.
While the system is in auto mode, the icon will disappear when the key is turned OFF and ON 10 times in total. Then icon will not appear again with the key further pressed. This is convenient because the icon will disappear only with the key turned OFF and ON, in which case the actual maintenance of the equipment will be up to the user's choice.
While in manual mode, the icon will disappear with the working lamp pressed continuously for 3 seconds. In this case, the message will be eliminated after the user's maintenance work. Therefore, the problem of the careless omission of maintenance will be prevented. This method is, however, complicated. Therefore, it is necessary for each dealer to make maintenance management.
When all the described inspection items in the Operation Manual are considered, a message will be displayed at 50-hour intervals, which is not so meaningful. In view of the foregoing, important items (e.g., items related to the engine oil, operating oil, air filter, and engine oil filter) should be targeted so that a message will appear in the case of maintenance necessity for any of these items. The meter with North American specifications and that with European specifications share the same software, but the timing of maintenance varies with the specifications and the size of the system. Therefore, the displayed frequency of each item is changed according to the specifications. Fig. 2 shows an example of the display of the KX41-3, KX71-3 and super series models with North American specifications.
Usually, the service hour meter advances in synchronization with the hour meter, thus causing no problems. If the hour meter is replaced, however, the new hour meter will start with zero hour. In that case, the service hour meter will be asynchronous. Due to ethics reasons, the system cannot incorporate functions that allow the alternation of the hour meter. There are, however, no problems in altering the service hour meter. Therefore, items that can be input for the service hour meter have been prepared.

Service Hour Meter with North American Specifications

No.	Check points		Intervals	Hour meter indicator									Consequently
				50	100	250	300	500	550	750	800	1000	
1	Engine oil		change	○			○		○		○		every 250 hrs
2	Hydraulic oil		change									○	every 1000 hrs
3	Air filter element	Outer element	replace									○	every 1000 hrs
		Inner element	replace									○	every 1000 hrs
4	Drive unit oil		change		○			○				○	every 500 hrs
5	Engine oil filter		replace	○			○		○		○		every 250 hrs
6	Hydraulic return filter element		replace			○				○			every 500 hrs
7	Hydraulic suction filter element		replace									○	every 1000 hrs

The message appears. The message shows up as follows.

32 1500 HR service

Fig. 2

EU - version machine
A message appears initial at 50-hour intervals and 250-hour intervals (i.e., every 250, 500, 750, and 1000 hours).

3-13 Servive hour meter check

The service hour meter can be checked and altered by selecting Other menu, Other menu, and Service hour meter.
Only the display selector switch is used to make value changes. The service hour meter will be changed when the meter is replaced, because the service hour meter will not be synchronized with the hour meter, and warnings will not be displayed in a timely manner.

Service hour meter 1.5 h	→	Service hour meter 1234.5 h	→	Service hour meter □ □ □ □ ■ □ h
↓ 67		67		

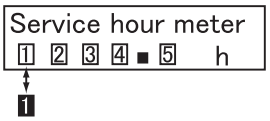

As you reach to this menu, first box is blinking to ready to change the digit. Push the SW in short, the number will be incremented. Push the SW longer, the number will be fixed and shifted to next box. After fixing all boxes, the beep sounds three times and automatically returns to service hour meter with new service hours.

3-14 Servive hour meter delete

A deletion method of the service hour meter can be set by selecting Other menu, Other menu, and Service warning selection.

Auto: North America & Oceania - version
The service hour meter will be turned off when the key is turned OFF and ON 10 times in total.

Manual: EU - version
The service hour meter will be turned off with the working lamp switch pressed continuously for 3 seconds.

Note:
Change in Service Hour Meter

North American specifications: By default set to auto.
European specifications: By default set to manual.
Turn off the service hour meter with the working lamp switch pressed.

Service warning selection	→	Service warning auto manual	→	Finish Key off
↓ 110		112		75

3-15 Set-up time

The hour meter used for model settings can be checked by selecting Other menu, Other menu, and Set up hour meter.

Set up hour meter 1234.5h
↓ 68

3-16 Software version

The software version can be checked by selecting Other menu, Other menu, and Soft version.

Soft version EA9F
↓ 69

3-17 Auto glow control

The glow will be turned ON for an optimum time according to the temperature of engine cooling water.

3-17-1 Key-ON Processing

Water temperature: The glow-ON time is obtained from the glow time map (see Fig. 1, 2). The glow will not, however, turn ON while the engine is working or the temperature is 81 C or over. The glow icon will appear with the glow turned ON.

When the user confirms that the glow icon turns OFF and tries starting the engine, a delay in response (usually 0.5 to 1.5 seconds) will result, during which the temperature of the glow plug will drop. Therefore, the actual glow will be kept turned ON for 2 seconds after the glow icon disappears. This will make a response time lag between the display and glow time, thus making it possible to start the engine smoothly. (See Fig. 3.)

Water temperature (°C)	Glow time (s)	**Glow icon display time (s)**
140	0.0	0.0
100	0.0	0.0
81	0.0	0.0
80	3.0	1.0
60	3.3	1.3
40	3.8	1.8
20	5.3	3.3
10	6.5	4.5
0	9.0	7.0
-10	11.0	9.0
-15	12.0	10.0
-40	12.0	10.0

Fig.1.Cooling Water Temperature vs. Glow Time

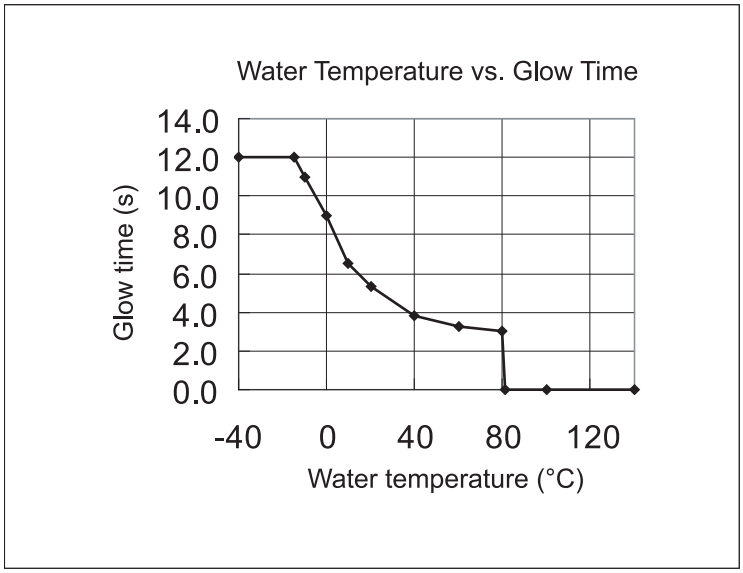

Fig.2.Graph of Water Temperature vs. Glow Time

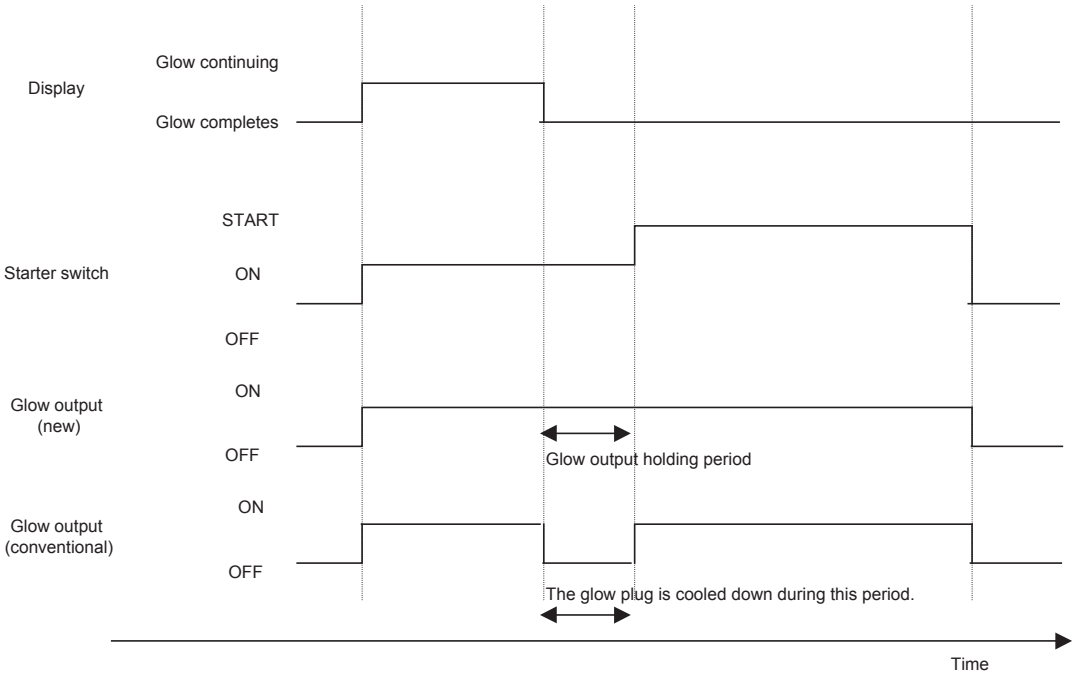

Fig.3.Transition Diagram of Glow and Starter Key

Glow ON/OFF Conditions

The glow will turn ON under any of the following conditions: The engine revolution is 1000 rpm or below; the engine oil pressure switch is OFF (the input terminal of the engine oil pressure switch is H); the charge is OFF (the L input terminal is H). If these conditions are not satisfied, the glow will be turned OFF because controller unit judges that the engine has started.

Relationship between Water Temperature and Dots

The gauge of the water temperature uses four dots vertically and 34 dots horizontally.
The relationship between the water temperature and dots is shown below.

Refreshment Cycle of Number of Dots

The average temperature of 721 samples obtained at 6.9344-ms intervals (6.9344 ms x 721 = 5 s) is converted into the number of dots to refresh the display.

Enlarged view of water temperature gauge

Water temperature	Dots
40	0
70	14
100	17
110	20
125	34
140	34

Relationship of Water Temperature and Number of Dots

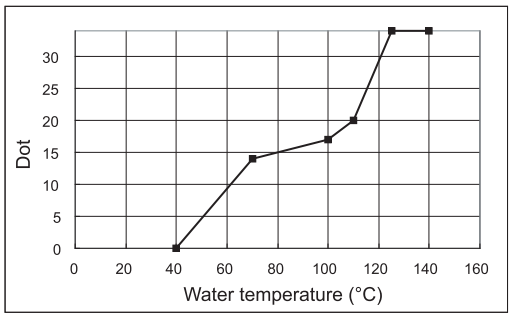

Relationship of Water Temperature and Number of Dots (Graph)

Glow Control (Others)

1. If the grounding of the motor to the engine is improper, the voltage may sneak to the glow relay, thus always turning the glow relay ON. Therefore, when the key is not at the start position, the glow relay will be turned OFF.
2. If the battery is discharged while the key turned ON (In case operator left the key ON) and when the battery voltage is close to the level of triggering the CPU, the following operation may be repeated.

   The microcontroller starts and turns the glow relay ON to perform auto glowing.
   ↓
   The glow current flows and the battery voltage drops because the glow relay is turned ON.
   ↓
   The microcontroller is reset.
   ↓
   The battery voltage rises because the microcontroller is reset and the glow relay is turned OFF, when no current flows.
   ↓
   The microcontroller is triggered and the glow relay is turned ON because the battery voltage rises.
   ↓
   The above sequence is repeated. Then glow relay contact may have chattering and be damaged.

The glow relay will be always turned OFF in order to prevent the chattering of the above glow relay when the voltage is 7.5 V or below. The similar process will be performed for the relay for the working lamp.
This know - how is to protect the relay itself.

3. FYI (For your information)

water [V]	temp [°C]
0.33	140
0.409	130
0.504	120
0.634	110
0.795	100
1	90
1.26	80
1.58	70
1.96	60
2.4	50
2.86	40
3.36	30
3.77	20
4.15	10
4.44	0
4.66	-10
4.8	-20
4.89	-30
4.94	-40

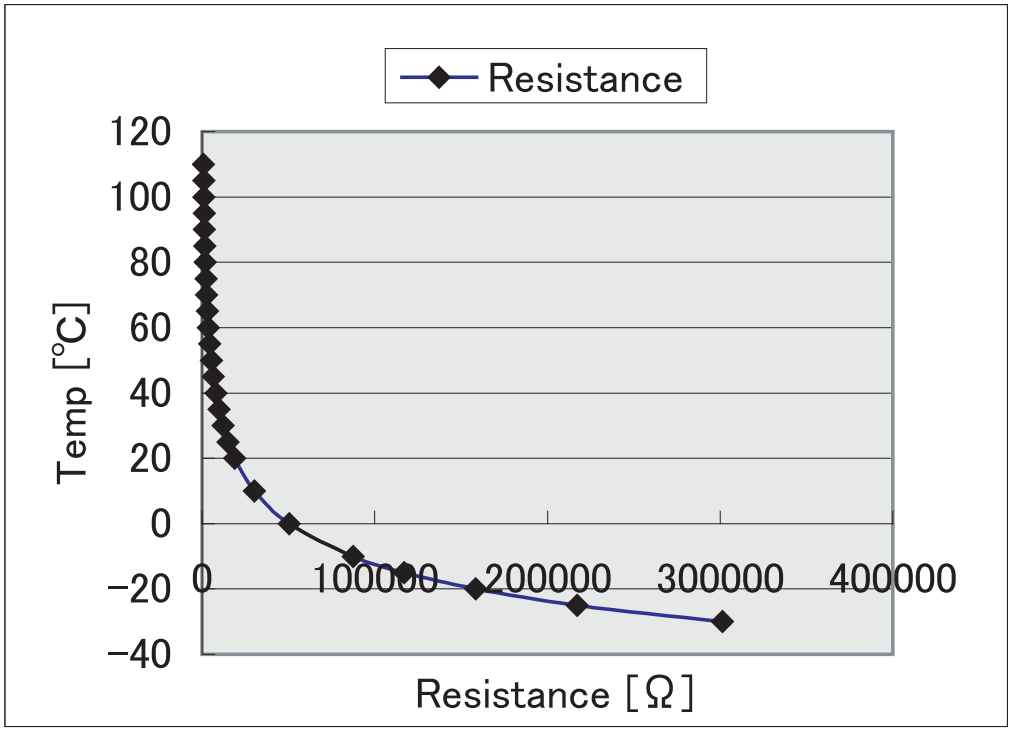

3-18 Travel high - low switch control

1. Change travel speed by pressing the high - low switch on the dozer control lever. Refer to the control flow.
2. The travel mechanism will start in low gear to ensure safety when the key is turned ON.
3. With consideration of the change of the operator with the key kept turned ON, the frame mechanism will be set into low gear to ensure safety when the lever lock is lifted up.
4. Control flow chart.

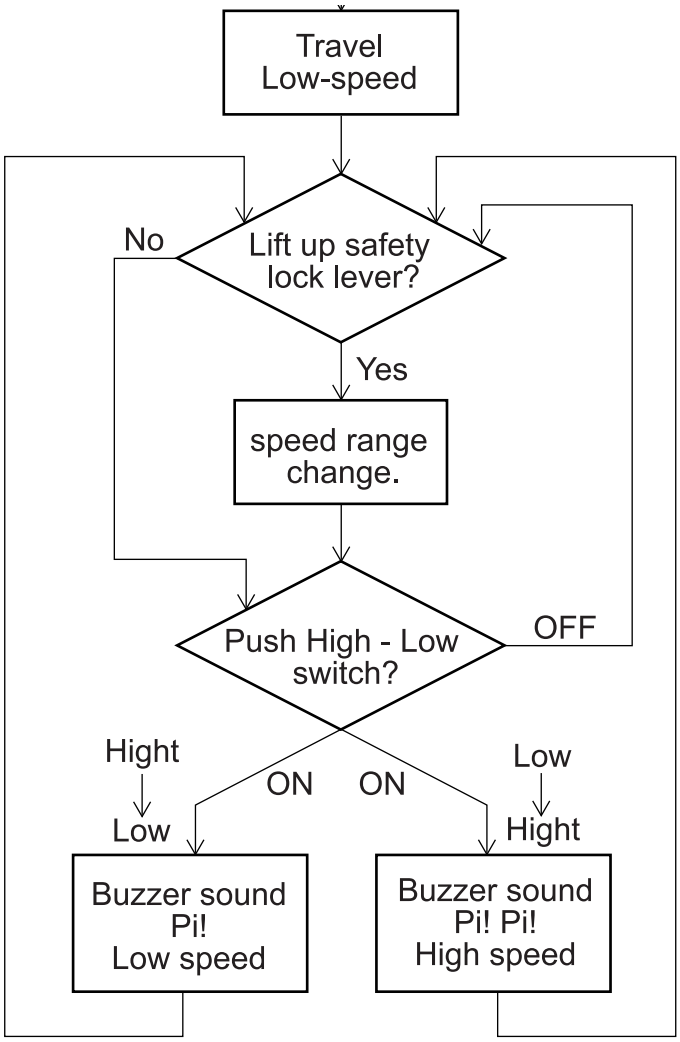

Note:
System will always “Reset” to low speed when key is switched “OFF” or safety lock lever is lifted.

3-19 Fuel amount control

1. Outline

A map indicating the voltage and fuel relationship has been prepared by plotting each determined input voltage based on the float position of the fuel sensor and the remaining fuel.
The power supply voltage (5V) is input into the microcomputer according to the partial voltage varied with the float position. Therefore, when calculating the actual quantity of remaining fuel, make a map conversion with consideration of the power supply voltage.
The fuel shortage alarm will be displayed when the quantity of remaining fuel is between approximately 5 and 10 liters, the range of which, however, varies with the model. As a rule of thumb, the fuel will last for approximately one hour after the alarm turns ON.

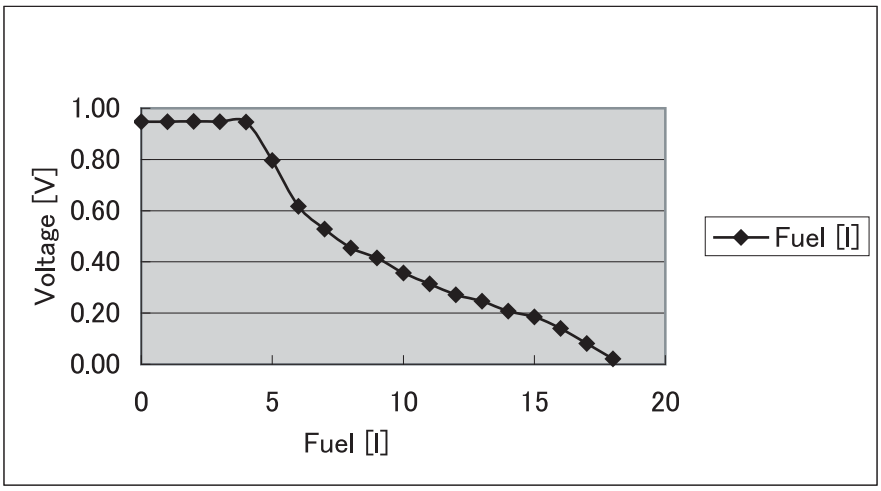

Voltage and fuel map

Fuel shortage alarm

Model	Fuel residual amount [l]
KX41-3	5 ± 3
KX61-3	7 ± 3
KX71-3	7 ± 3
KX91-3SS	5 ± 2
KX101-3SS	5 ± 2
KX121-3SS	12 ± 2
KX161-3SS	12 ± 2
U35, U35-3	5 ± 2
U45-3	12 ± 2

Circuit diagram & function(Fuel sensor)

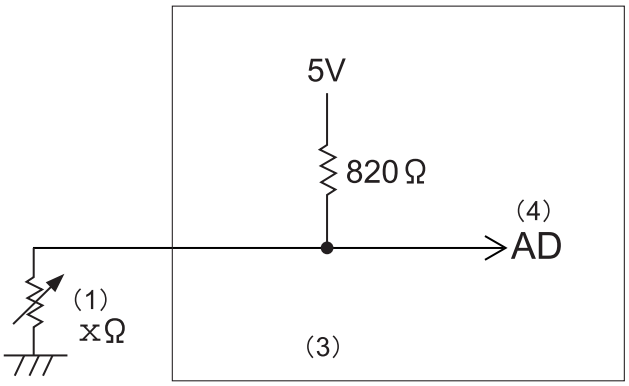

(Water temp sensor)

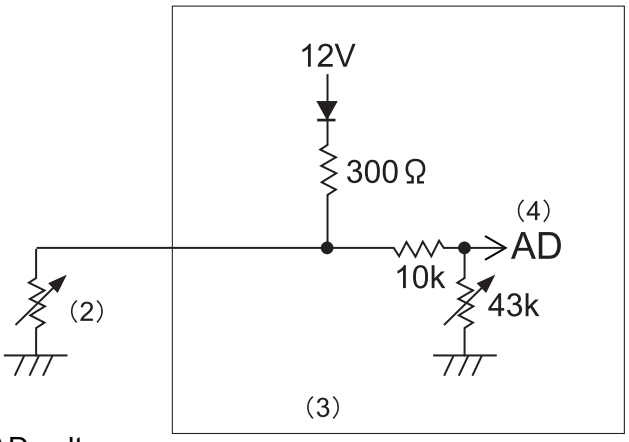

(1)Fuel sensor (2)Water temp sensor (3)Meter (4)AD voltage

(Calculation example) Voltage value is 0.899 for example.

$$\frac{5}{x + 820} \times x = 0.899$$

$$5x = 0.899x + 0.899 \times 820$$

$$(5 - 0.899)x = 0.899 \times 820$$

$$x = \frac{0.899 \times 820}{5 - 0.899} = \frac{737.18}{4.101} = 179.76\ \Omega$$

Theoretically, water sensor's resistance is 179.76 Ω

2. Meter display
   1) The LCD with four vertical dots and 37 horizontal dots is used to display the fuel gauge.

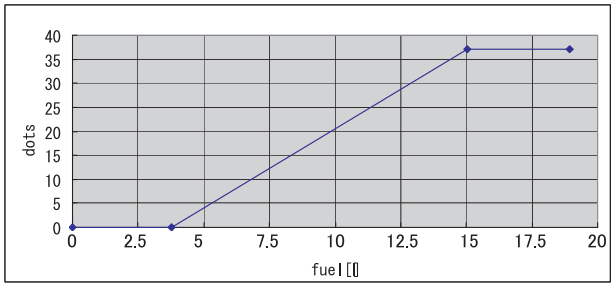

(Sample data : KX41-3)

Fuel level (Litter)	KX41-3	KX61-3, 71-3
Full in tank	19 ± 3	42 ± 3
Sensor upper limit	17 ± 3	41 ± 3
Sensor lower limit	5 ± 3	7 ± 3

Fuel level (Litter)	KX91-3S·α, 101-3S·α	U35, U35-3S·α	KX121-3S·α, 161-3S·α, U45-3S·α
Full in tank	48 ± 5	42 ± 5	65 ± 5
Sensor upper limit	40 ± 3	40 ± 3	58 ± 5
Sensor lower limit	5 ± 2	5 ± 2	12 ± 2

   2) A fuel shortage (0.899 V or over) is judged with 8,653 sampling times for 60 seconds. If a fuel shortage is detected 7,780 times or more (i.e., a minimum of 90% of the total), the fuel shortage alarm will be displayed.
   3) If the fuel shortage alarm is displayed when the key is turned OFF, data on the alarm will be saved in the microcomputer. If the voltage on average for 0.2 second indicates a fuel shortage (0.899 V or over) when the key is turned ON again, the alarm will be displayed at once.
   4) The alarm displayed will be canceled if the alarm cancel voltage (0.719 V or below) is detected 649 times or more (i.e., a minimum of 90% of the total) after the sensor signal is sampled 721 times for 5 seconds.
   5) When the engine starts, the sensor float sways greatly, thus resulting in input voltage dispersion. Therefore, the sampling cycle of the sensor signal is set to 25 seconds.
   6) If fuel sensor disconnection occurs, the existence of fuel is not detectable, and the fuel shortage alarm will not turn ON.

3. Fuel Replenishment Assist Function
While replenishing fuel by pressing any switch after the key is turned OFF, the buzzer interval will change according to the quantity of fuel replenished. When the fuel in the tank is not much, the buzzer will be heard at long intervals. When the quantity approaches the full tank level, the intermittent buzzer continues at shorter intervals. When the tank is full, the buzzer will be heard continuously with no intervals to prevent the fuel from overflowing from the tank.

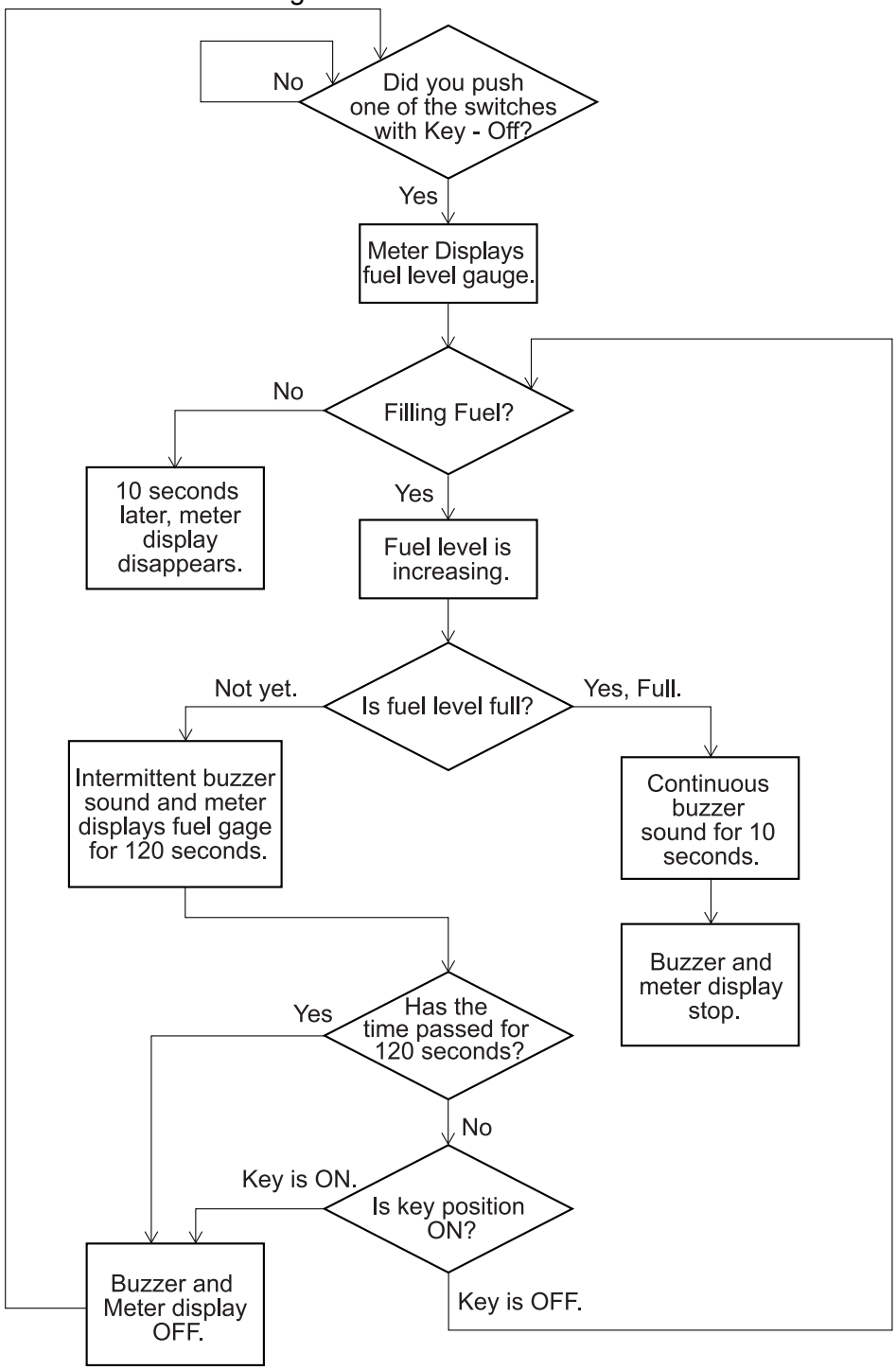

- Beep sound disappears approx 10 seconds after reaching to full of fuel.
- If fuel fank isn’t full, keep sound continues to sound for two minutes in order to alarm.

3-20 Starter auto release control

1. Outline
   1) If the key freezed in the start position, the auto release relay is turned OFF to prevent damage to the starter motor. At the same time, the glow relay will be turned OFF forcibly to prevent damage to the glow plug. (Prevention of startor motor from key freezing)
   2) The start of the engine is judged from the engine revolution sensor signal to turn OFF the auto release relay. (Starter auto release)
   3) If the key is turned OFF once and reset to the start position immediately while the engine is starting, the pinion gear will engage while the ring gear rotates, which deteriorates the durability of the gears. Therefore, the mechanism is designed to prevent of the engine from starting in two seconds after the key is turned OFF. (Reentry prevention control)
   4) The engine on the KX41-3 does not start at low temperature unless the revolution rises approximately 800 rpm. Therefore, the start of the engine is judged at 1,000 rpm.
      (The judgment of the release of the starter has been raised by 200 rpm.)
      As for the other models except KX41-3, the start of the engine is judged at 800 rpm.
   5) If the key freezes while there is a failure in the engine revolution sensor, the auto release relay will be automatically turned OFF in 30 seconds and power supply to the starter will be stopped. (Prevention of starter burnout damage)
      The reason the above period is set to 30 seconds is that it will be possible to start the engine by energizing the starter three times for 10 seconds after auto glowing even in winter at a temperature as low as -17 °C.
   6) As shown in the diagram, if the meter panel is damaged or the or the couplers of the meter panel are disconnected, then engine won't start.
      Just because the auto release relay is Normally Open type and so battery current won't be supplied to the strater moter. This is also for the safety.

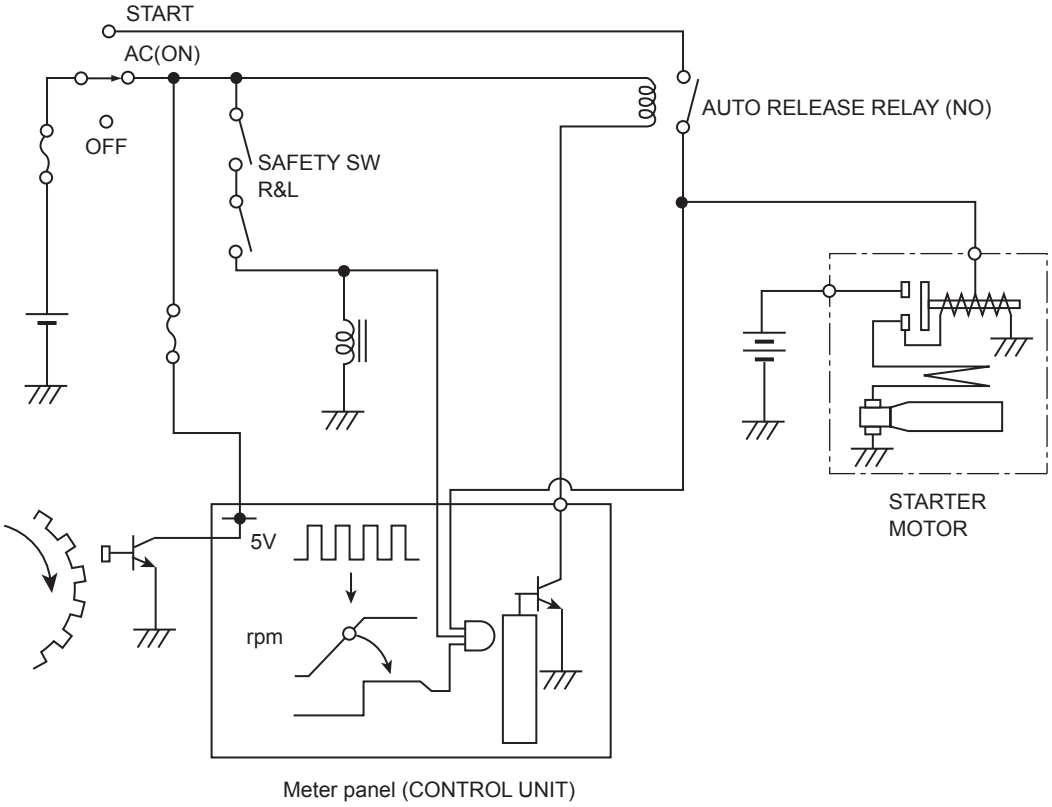

3-21 Service mode menu list

name	English	meaning and explanation
data023	KX36-3	Indicates the model name.
data024	KX41-3	Indicates the model name.
data025	KX61-3	Indicates the model name.
data026	KX71-3	Indicates the model name.
data027	KX91-3	Indicates the model name.
data028	KX101-3	Indicates the model name.
data029	KX121-3	Indicates the model name.
data030	KX161-3	Indicates the model name.
data031	KX251-3	Indicates the model name.
data032	U35-3	Indicates the model name.
data033	U35	Indicates the model name.
data034	U45-3	Indicates the model name.
data035	English French	Owner is expected to select the language he prefers.
data036	German Spainish	
data037	Italian Portugese	
data038	Dutch Danish	
data039	Swedish Finnish	
data040	Diagnosis	
data041	Tester	This means tester mode which test the following circuit conditions electrically on real time.
data042	Engine Battery 1234 r/min 12.4 V	The letters and symbols indicate the real time conditions of the following items. engine speed , battery voltage
data043	E.oil Charge	Engine oil pressure switch condition; on or off, Alternator charging circuit condition; normal or abnormal
data044	Water Fuel 2.32V 51.6℃ 0.33V 13L	Water V indicates water temp. sensor voltage Fuel V indicates fuel sensor voltage
data045	AI SW Press Motor 12.3A	AI SW indicates on or off condition of AI switch. Press indicates AI pressure switch condition. Motor A means current amount flowing to AI motor.
data046	Accel 1.33 Gover 1.33 2.33V 2.33 2.33V 2.33	Accel V indicates voltage amount at accel sensor. Gover V indicates voltage amount at governer sensor.
data047	Compressor	Compressor indicates the condition of air conditioner's compressure switch.
data048	S/P Breaker	Aux. Is abbriviation of auxiliary port and indicates the switch condition, on or off. Breaker indicates the breaker switch condition ,on or off.
data049	S/P L R 2.33 V 0.3 A 0.3 A	Aux. means in this case auxiliary port solenoid valve. L;left side, R; right side, A; current amount to each solenoid valve.
data050	Fail record Delete record	Fail record means machines' failure record are stored in the memory and can be shown up on the display. Delete record means you can delete if you want.
data051	First Last Count 234h 2345h 23	First h indicates the operating hours when first failure occurred, last means last fail occurred. Count indicates the number of fail occurred.
data052	No fail record	This means no failure occurred in the past.
data053	Back tier	Back tier indicates that you can return back to one upper tier or same tier by pressing the buttom, for either a long or a short time.
data054		

<Service mode menu list>

name	English	meaning and explanation
data055	Other menu	Literary it means other menus.
data056	Circuit check Engine stop	This means micro computor is ready to check electrical harness conditions, break or breaking. In this case, for your sefety engine should be off.
data057	Checking touch harness	This means micro computor is checking the harness conditions. Service personnel is required to put hands on the suspected harness, then controller detects the break of harness.
data058	AI motor drive	This display letter means that AI motor can be controlled by just pressing switches on the panel board. Aim of this function is to adjust AI motor link to fit the cable not by the accel knob but by switch.
data059	Max Idle (C.W.) (C.C.W)	Max(CW) means AI motor link moves toward engine speed Max. direction. Idle(CCW) means AI motor link moves toward engine speed idle direction.
data060	All fail record	With this display on, all fail records will be shown up on LCD.
data061	EEPROM read	This display means that data in the EEPROM will be shown up on LCD.
data062	1234 FEDC FEDC FEDC FEDC FEBA FEDC FEDC FEDC FEDC 23	These figures and letters indicate the data of EEPROM. Data can be scrolled up by pressing the switch.
data063	LCD check	This indication shows that micro computor is checking the LCD function.
data064		This shows LCD condition.
data065		This shows LCD condition.
data066		This shows LCD condition.
data067	Service hour meter 1234.3 h	This indicates the service hours of the machine.
data068	Set up hour meter 1234.3 h	This indicates the hours of machine set up.
data069	Soft version 12345	This indicates the software version of main controller.
data070	Set up	This means initialization of the machine main controller.
data071	Enigne start	This indicates that operator is required to start engine.
data072	Set up AI	This means initialization of the AI system.
data073	Accel max	This indicates that operator is suggested to turn the accel knob to Max engine speed.
data074	Accel idle	This indicates that operator is suggested to turn the accel knob to idle engine speed.
data075	Finish key off	This means all initialization process has completed and operator is suggested to turn off key.
data076	Set up machine	This means initialization of the machine.
data077	Set up solenoid	This means initialization of the solenoid valve.
data078	Set up idle 1200 r/min	This means initialization of the engine idle speed.
data079	Set up overheat warning	This means initialization of engine overheat warning system.
data080	Overheat temp. 114 ℃ -10 ℃	This indicates the overheat temp. setting value.
data081	32 1500 HR service	This indicates service hour to conduct maintenance job.
data082	Made in Japan Made in Germany	These indicates where machine was manufactured.
data083	Lever Travel Start	These letters and signs indicate the switch conditions; safety lock lever, travel high speed and main key position at start or not.
data084	31 Lift up unload lever	This indicates that operator is suggested to lift up unload lever(safety lock lever).
data085	Simple mode	Simple mode means that min. fail indications are shown up on LCD.

e. New auto idling (AI) control system

(1)Purpose

When you interrupt a job and set the control lever to neutral, the engine will come to the automatic idling rpm in 4 seconds. This helps save energy and keep quiet.

(2)Auto idle function mechanism

1. The auto idle type machines are equipped with the electrical devices that are shown in the accompanying AI function layout.
   (1) Meter panel (AI system lamp)
   (2) AI motor
   (3) Pull cable
   (4) Acceleration sensor
   (5) AI pressure switch
   (6) Governor sensor
   (7) Engine speed sensor
2. To enable the auto idle function, first turn on the AI switch.
3. When you operate the machine, the AI pressure switch detects the primary pressure of the hydraulic pilot system and opens the contact. The signal is then sent to the CPU of the controller.
   The AI pressure switch is attached on the control valve. This switch is of normally closed type (the contact is usually kept closed).
4. The acceleration sensor is attached on the support of the accelerator knob. The knob position is detected in terms of turning angle by a potentiometer, and the signal is sent to the controller CPU.
5. The governor sensor and the engine speed sensor are installed on the engine governor. The governor position signal is sent to the controller CPU.
6. The controller CPU processes the above information and feeds a current command to the AI motor so that the engine governor should run at maximum speed.
7. Receiving the command, the AI motor starts and controls for the engine governor, through the pull cable, to reach maximum rpm. This leads to the maximum engine speed.
8. When all the hydraulic actuators are at neutral, the AI pressure switch gets normally closed and sends the signal to the controller CPU.
9. The CPU of the controller then feeds a current command to the AI motor so that the engine governor should run idle. In this way, the engine will also set itself to the idling speed.
   The CPU will get idling, too, 4 seconds after receiving the pressure switch signal.

☆Trouble cases

Electrical system:
If the AI switch or its coupler is out of position or if the harness is broken, the circuit gets open (contact off). In other words, the microcomputer judges that the hydraulic actuator is running, and the auto idle function fails.
Hydraulic system:
If a trouble occurs in the hydraulic system, there is no pressure rise often. In other words, the AI pressure switch gets normally closed, and the microcomputer judges that the hydraulic system is not running, namely, the control lever is at neutral. (Even by moving the control lever, the initial; engine speed cannot be resumed.)

(3) New auto idling modification

1. Interlocked with lever lock.
   If the lock lever is raised.
   Engine changes to idling rotation immediately(does not wait for 4 seconds.)
   (Convenient at the time of gets off a machine.)

2. Interlocked with Anti Theft
   If Anti Theft is functioning, then engine rotation is fixed to idling.
   (It cannot be canceled by short-circuit of simple wiring.)

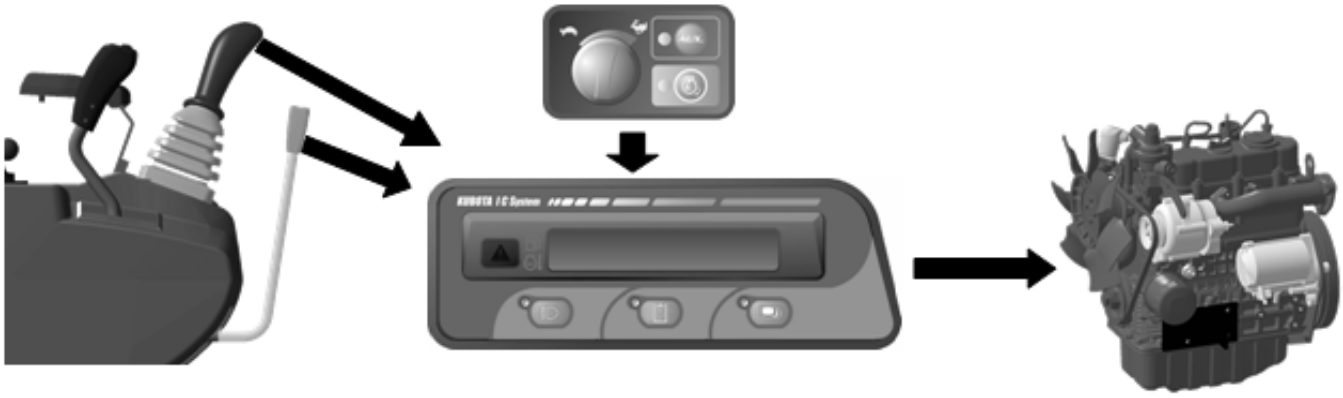

3. AI function layout

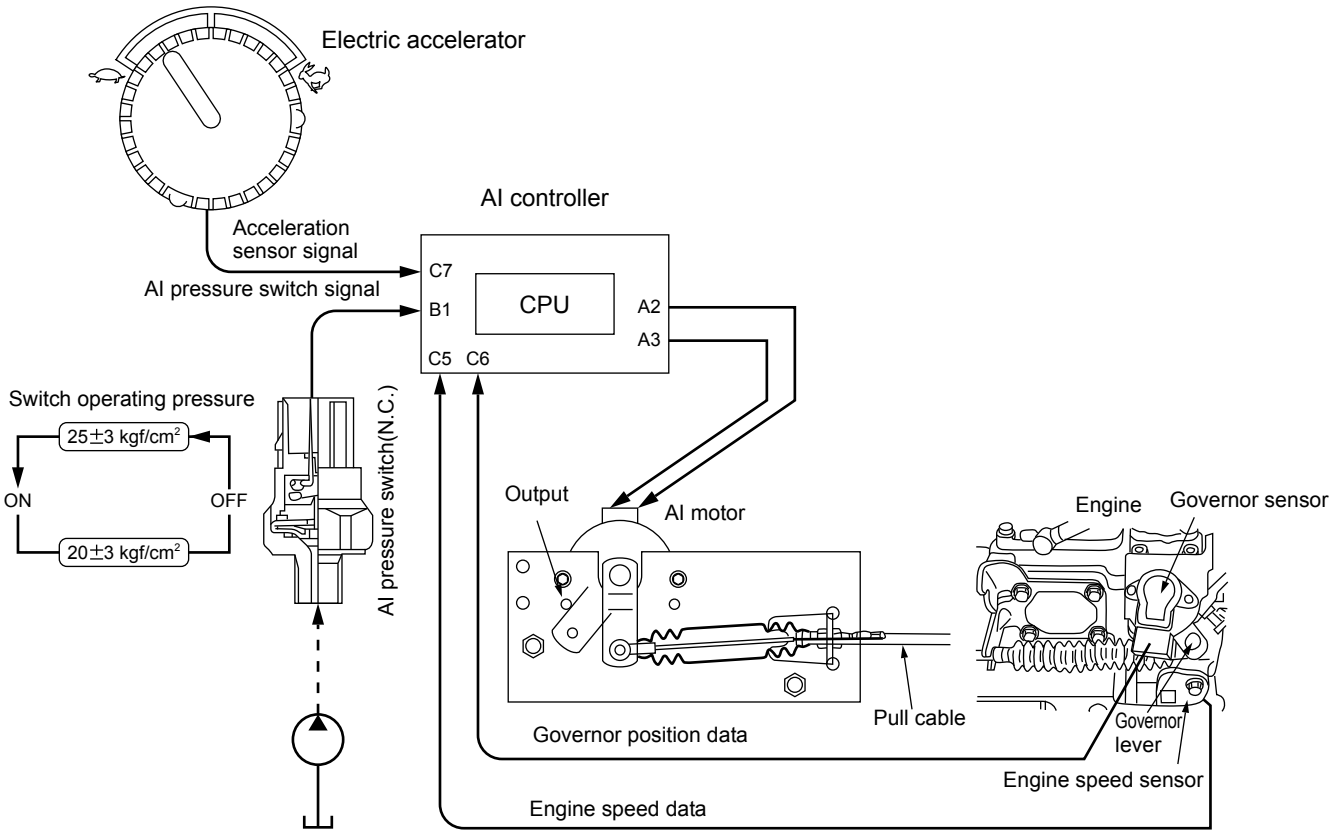

<Operating chart>

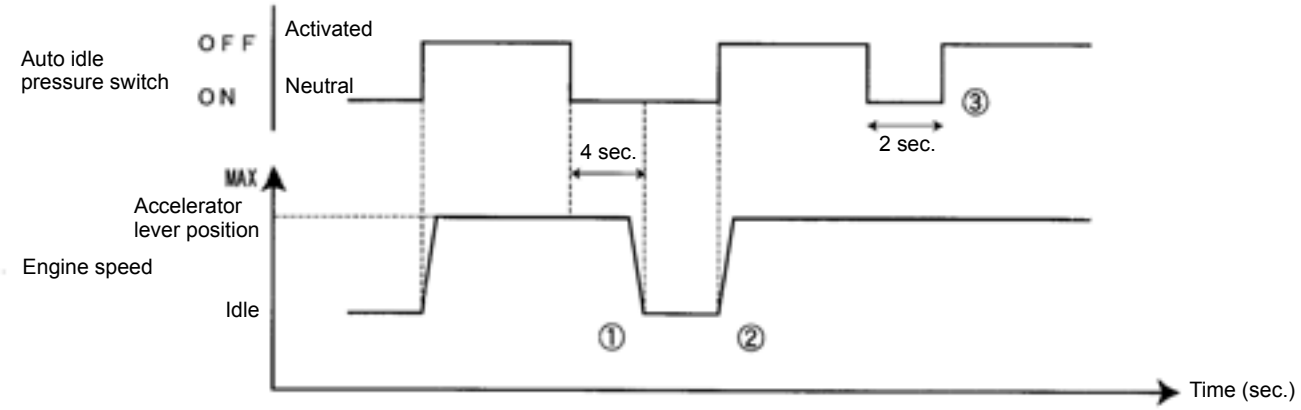

(1) The idling speed can be achieved 4 seconds after the control lever is set to neutral.
(2) The initial speed is resumed just after the control lever is moved.
(3) The speed remains the same if the control lever is kept at neutral for 2 seconds.
(4) When the safety lock laver is liffted up, engine speed gose down to idle rpm.

4. Behavior when the control lever is returned to neutral

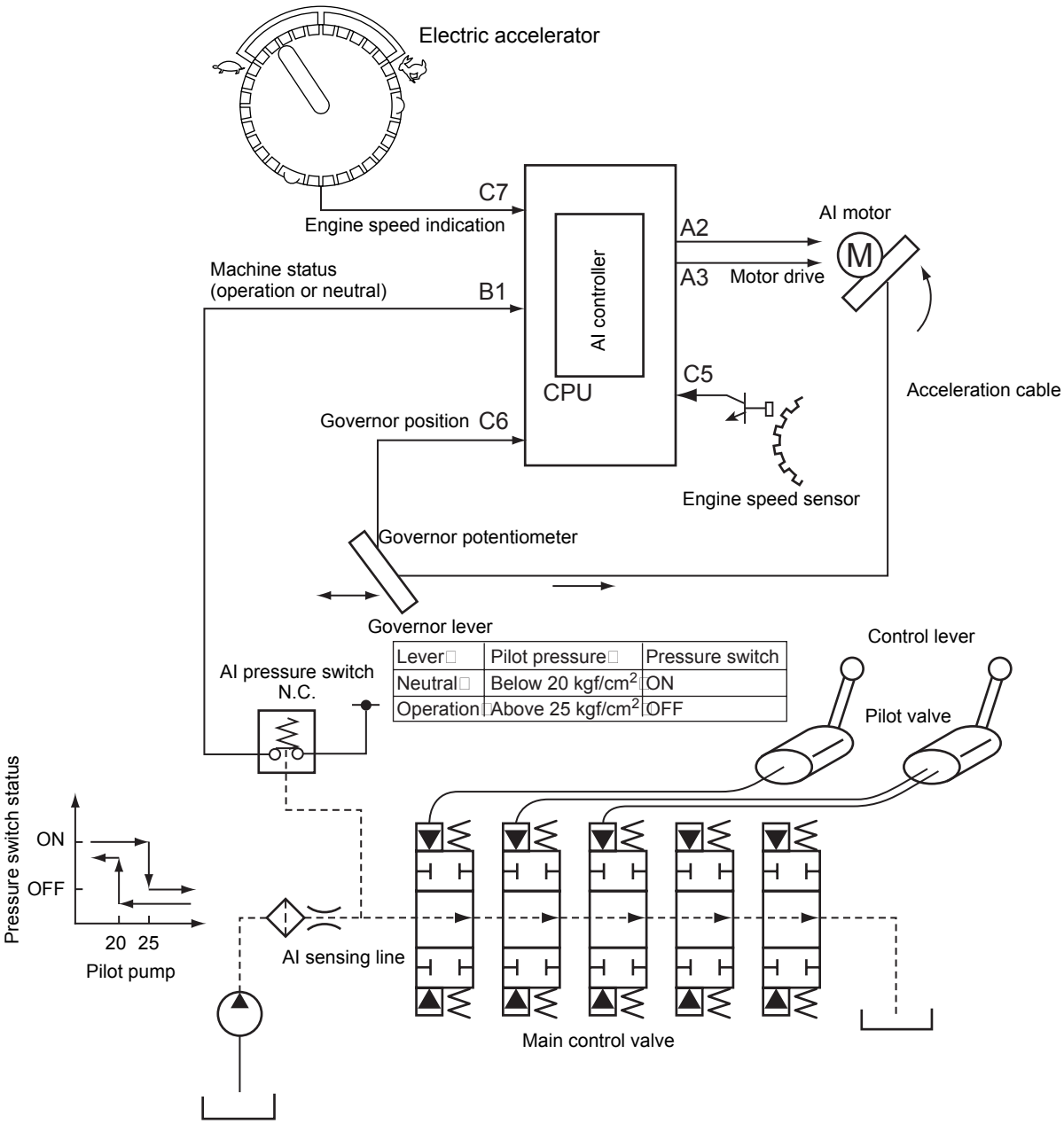

Lever	Pilot pressure	Pressure switch
Neutral	Below 20 kgf/cm^2	ON
Operation	Above 25 kgf/cm^2	OFF

1. When returning the control lever back to neutral:
   - AI pressure switch at ON and accelerator knob at MAX:
     When the control lever has been placed back to neutral, the oil flows from the pilot pump through the neutral passage of the control valve to the tank. The pressure drops, which turns on the pressure switch. In about 4 seconds, the AI motor gets started to reduce the engine speed to the idling level.

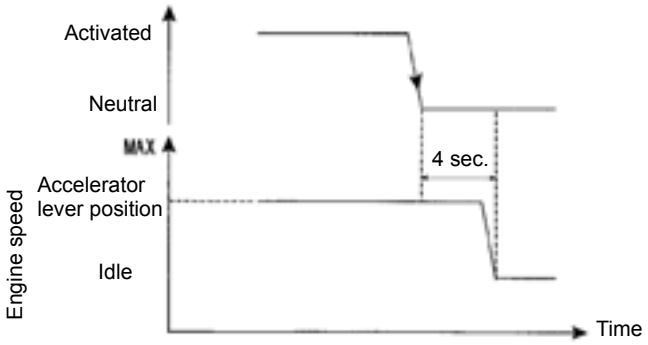

5. Behavior when the control lever is operated:

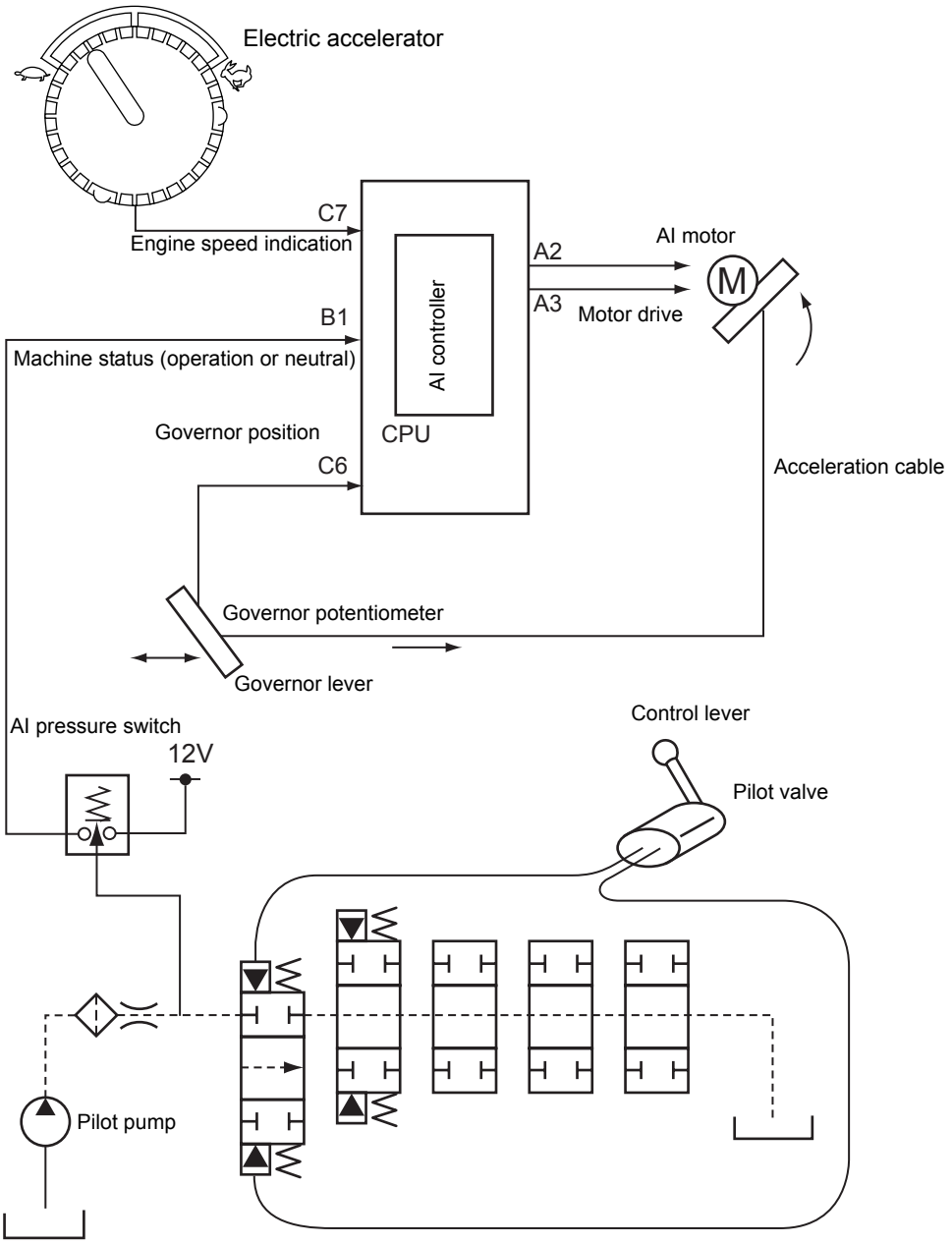

- AI pressure switch at ON and accelerator knob at MAX:
  When the control lever is operated (left swivel, for example), the control valve is activated to cut off the oil flowing from the pilot pump. The primary pilot pressure is applied to turn off the pressure switch.
  The AI controller functions to run the AI motor so that the engine governor should reach maximum position. The engine speed rises quickly to maximum rpm.

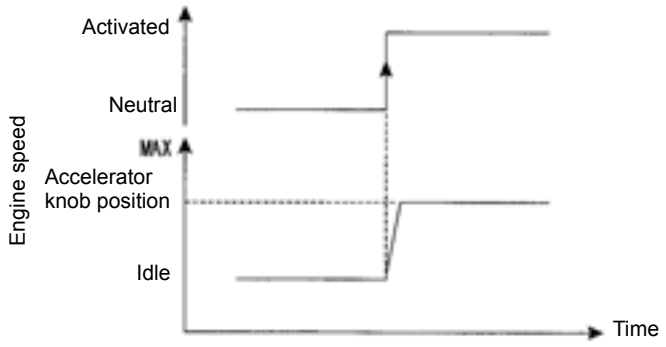

6. AI motor normal-turn circuit

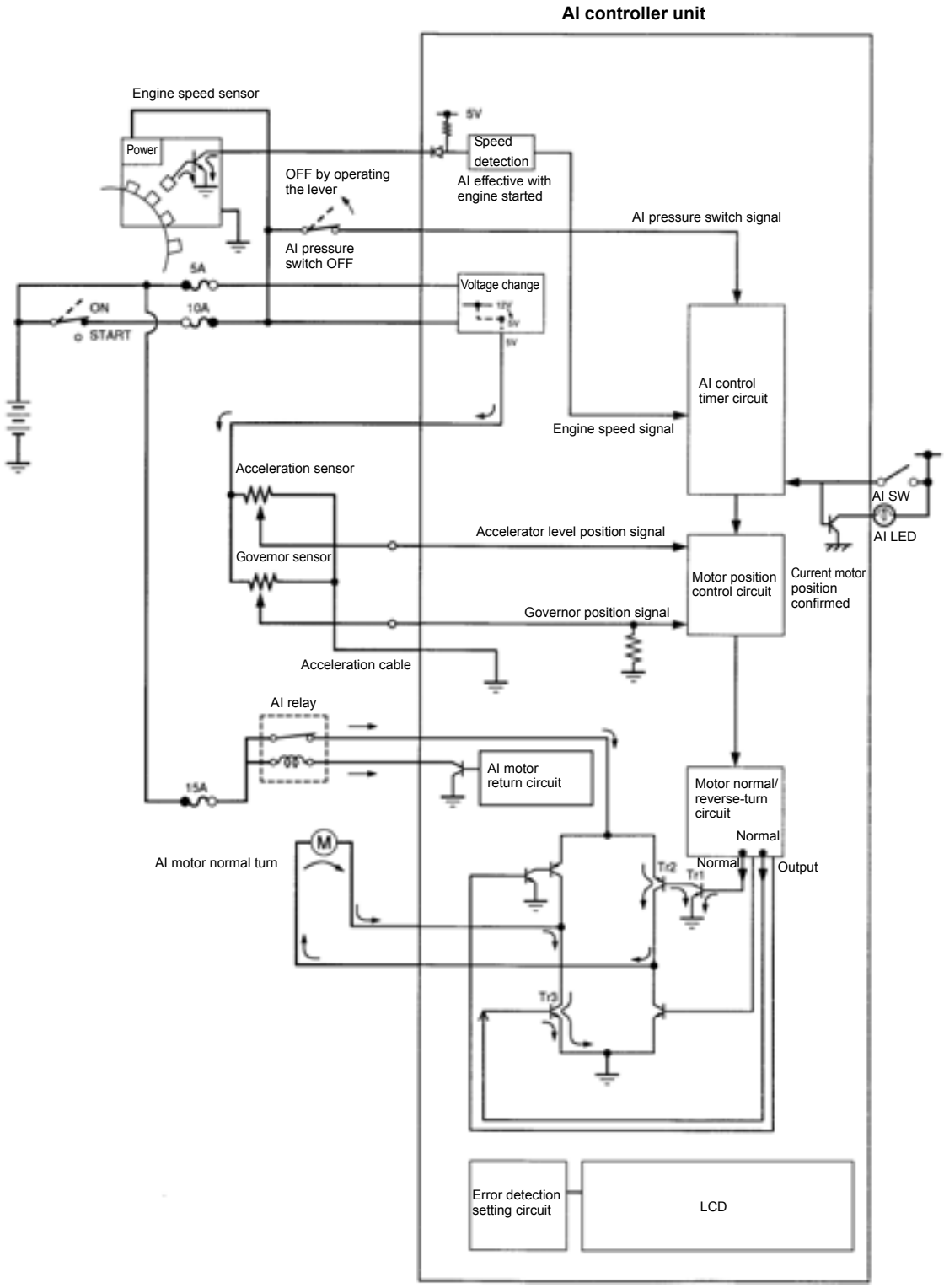

Behavior:

1. The acceleration sensor signal and governor sensor signal are fed to the motor position control circuit.
2. The motor normal/reverse-turn circuit serves to select the AI motor turning direction based on the lever position by the operator.
3. When the normal turn is selected as shown in the figure, the base current flows to the transistor Tr1. Now the battery current flows for running the AI motor in the normal direction.

7. AI motor reverse-turn circuit

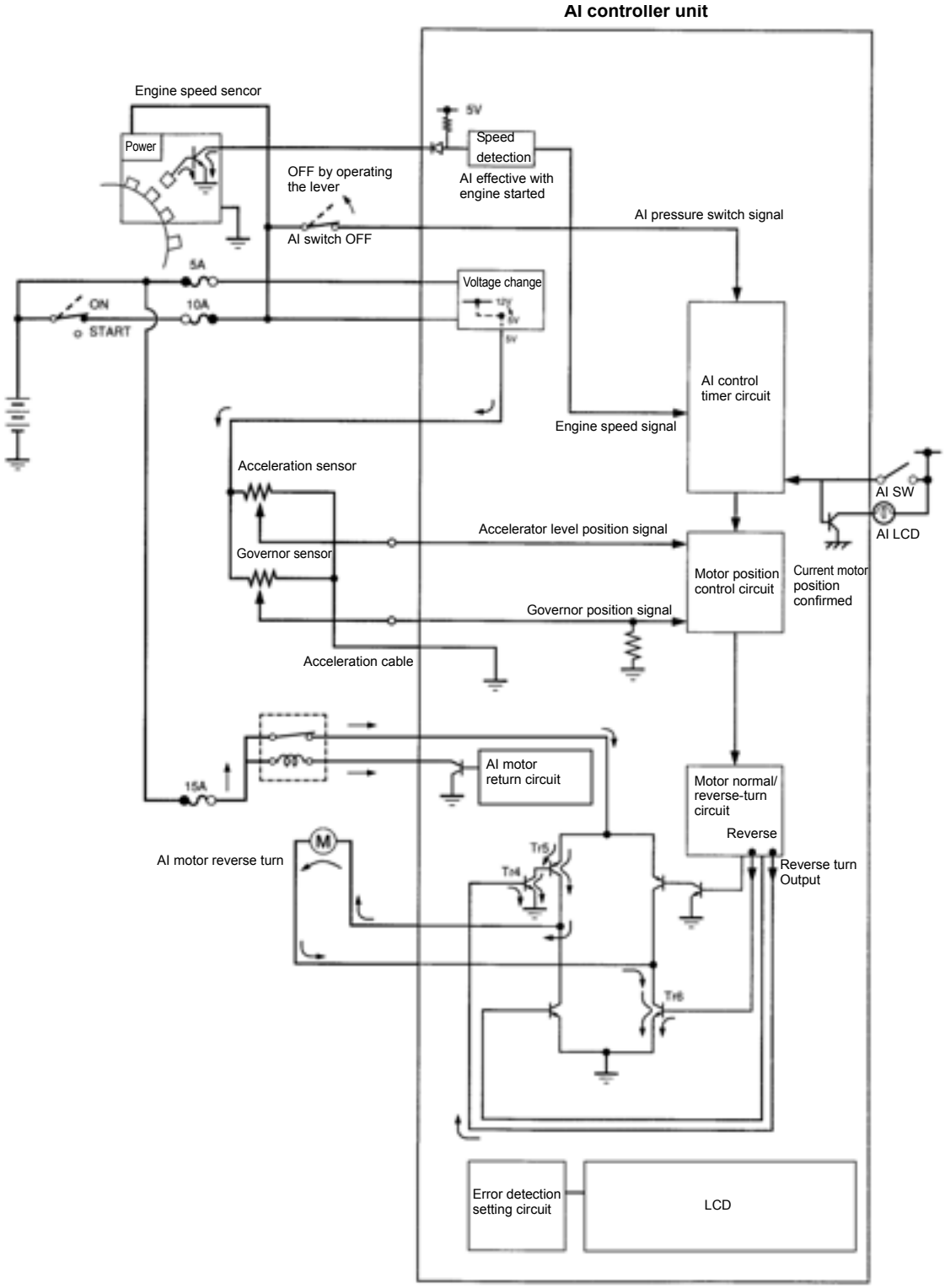

Behavior:

1. When the reverse turn is selected by the motor normal/reverse-turn circuit as shown in the figure, the battery current flows for running the AI motor in the reverse direction.
2. The reverse-turn electrical signal activates the transistors Tr4, Tr5 and Tr6 in this order. Now the battery current flows for running the AI motor in the reverse direction.

8. AI motor returning function

This function is newly incorporated in this new series.
In the previous models, KX121-3, 161-3.
AI motor's position is only controlled by the accel. sensor dial.
Therefore, suppose that operator turns off the starter key at the accel. sensor dial max. position.
Then next time when he turns the main key, engine starts at max. speed.
This is a kind of frightenning to the operator.
New function is to relieve this annoyance.

<Function chart>

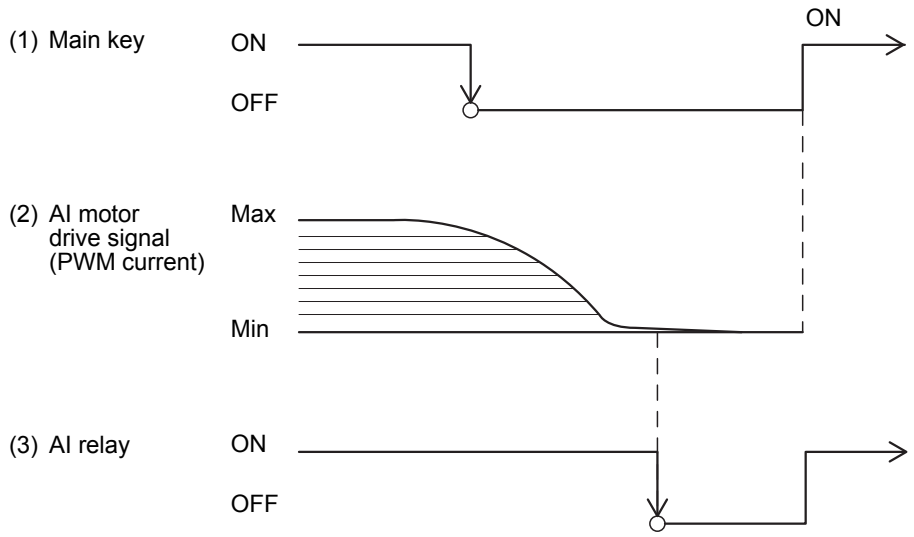

After the main key is off, the controller detects the AI motor drive signal which is set by the accel sensor and reduces to min. level to return the AI motor position to the idling speed.
In this way, even when the operator turns off the key at max. speed, engine starts at idle speed for the next key turning.

(4) Idle-up control

The idling speed increases by 150 rpm when the water temperature drops below 30 centi-degrees. (Reason:Even at the same governor position, the engine speed drops about 150 rpm at the temperature of - 18 centi-degrees.)

<Function chart>

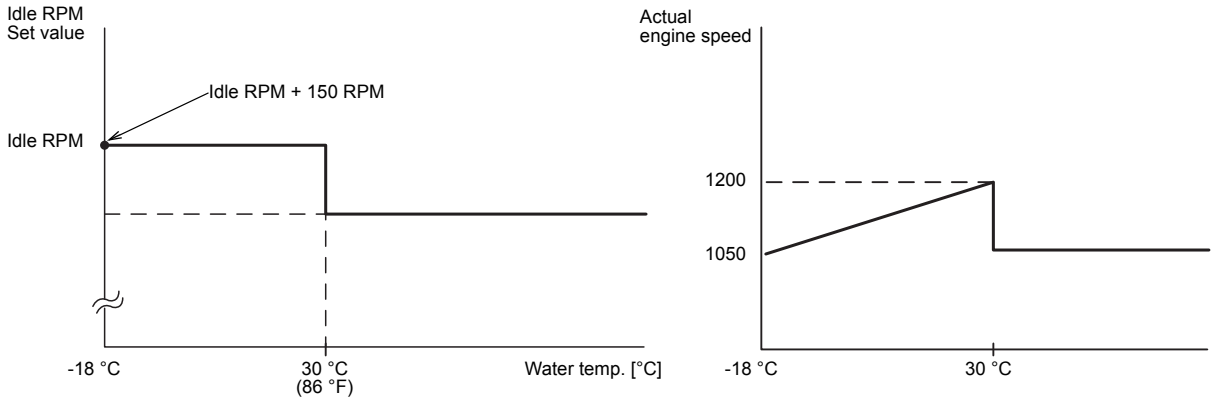

<Function diagram>

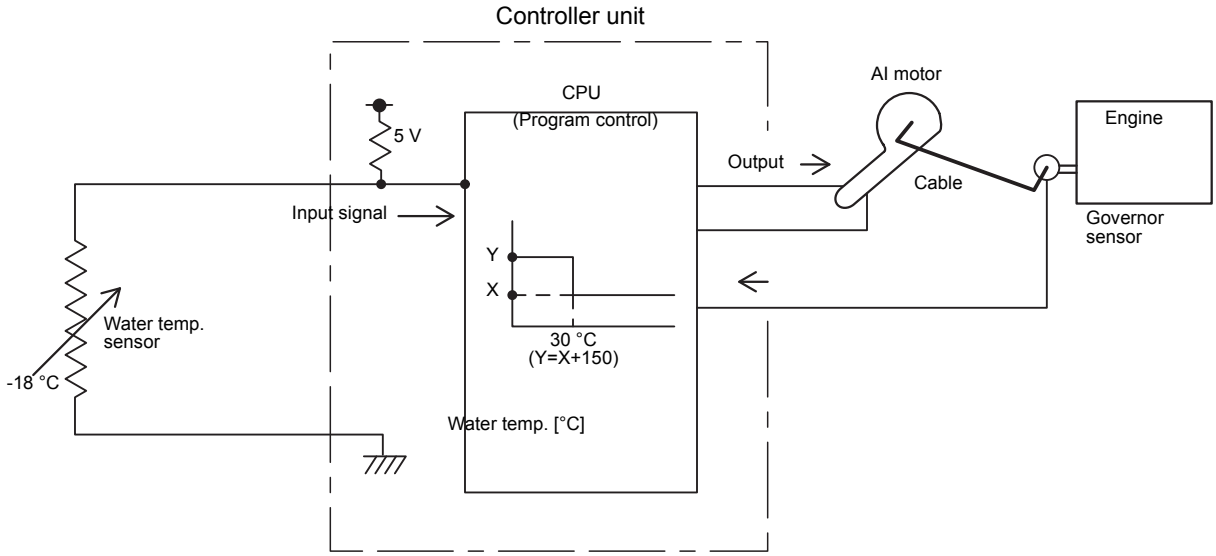

CPU in the controller unit detects the water temp sensor signal.
Stored program calculates the optimum idle speed according to the water temp. sensor value.
If the temp. value is over 30 °C (86°F), then CPU commands to output the preset idle PRM.
If the temp. value is below 30 °C (86°F), then CPU commands to output 150 rpm higher then the preset idle speed.
Actual output from the controller is PWM current to the AI motor. Then AI motor rotates to regulate the engine governor value which is always feed back to the controller.

(5) Compressor control

When the compressor is on, the idling speed is raised by 150 rpm.
The idea is as follows.
If the compressor is repeatedly turned on and off kept off for 3 seconds, the idling speed gets back to its original rpm. In this way, the AI motor can be kept from getting activated many times.
(Reason: If the compressor is on and the alternator barely generates power, the battery, if connected to an external load, may fall to work.)

<Function chart>

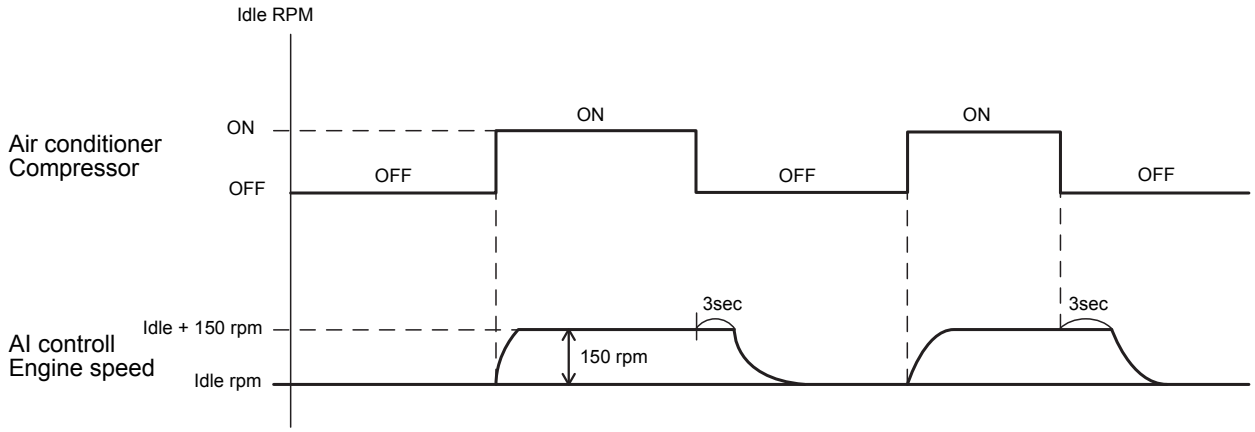

<Function diagram>

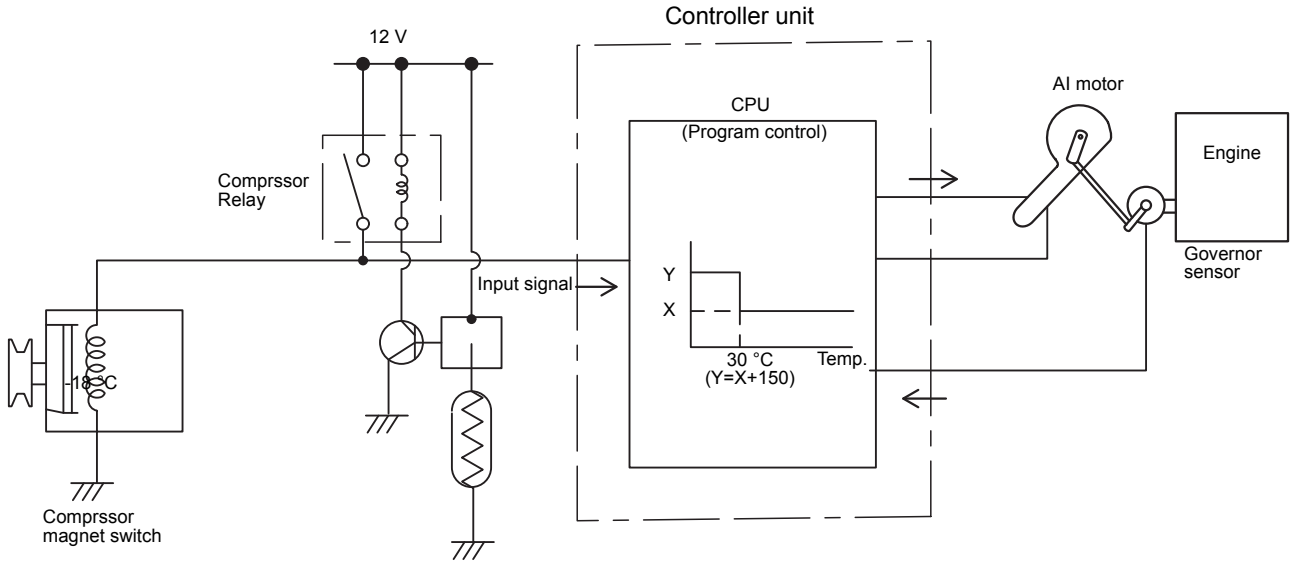

Watching the voltage condition of compressor magnet switch, CPU in the controller commands the AI motor to regulate the engine idle speed.
If the magnet switch is ON, then CPU commands to output 150 rpm higher than the preset idle speed.
If the magnet switch is OFF, then CPU commands to output the preset idle RPM.
Actual output from the controller is PWM current to the AI motor.

Idling RPM of AI - version incorporated in the controller program.

	KTC, KCL, KTA		EU - version	
	canopy	cab	canopy	cab
KX41-3	-	-	-	-
KX61-3	-	-	-	-
KX71-3	-	-	-	-
KX91-3	1050	1150	1050	
KX101-3	1050	1150		
KX121-3	1100	1200	1100	1200
KX161-3	1100	1200	1100	1200
U35-3	-	-	1050	
U45-3	1100	1200	1100	1200

As for the service part of the meter panel, default value of the idling speed is set at 1050 rpm.
Therefore, whenever the meter panel is replaced, you’re required to reset the idling RPM for AI version according to the above table.
In case of non - AI - version machine, mechanical link system is ready to readjust.

(7) Engine speed sensor

The engine speed sensor is a quick-response proximity switch. When the teeth of a gear pass close, the magnetic field inside the switch changes and the variation is converted to pulses.
The number of pulses for "t" seconds is counted by the microcomputer. The engine speed is then computed in the following equation.

$$\frac{2 \times 60}{68 \times t} \text{ [rpm]}$$

Such speed data is used for the starter's automatic release system.

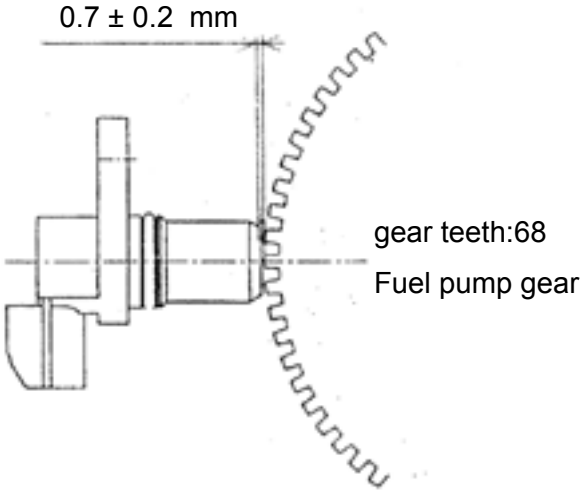

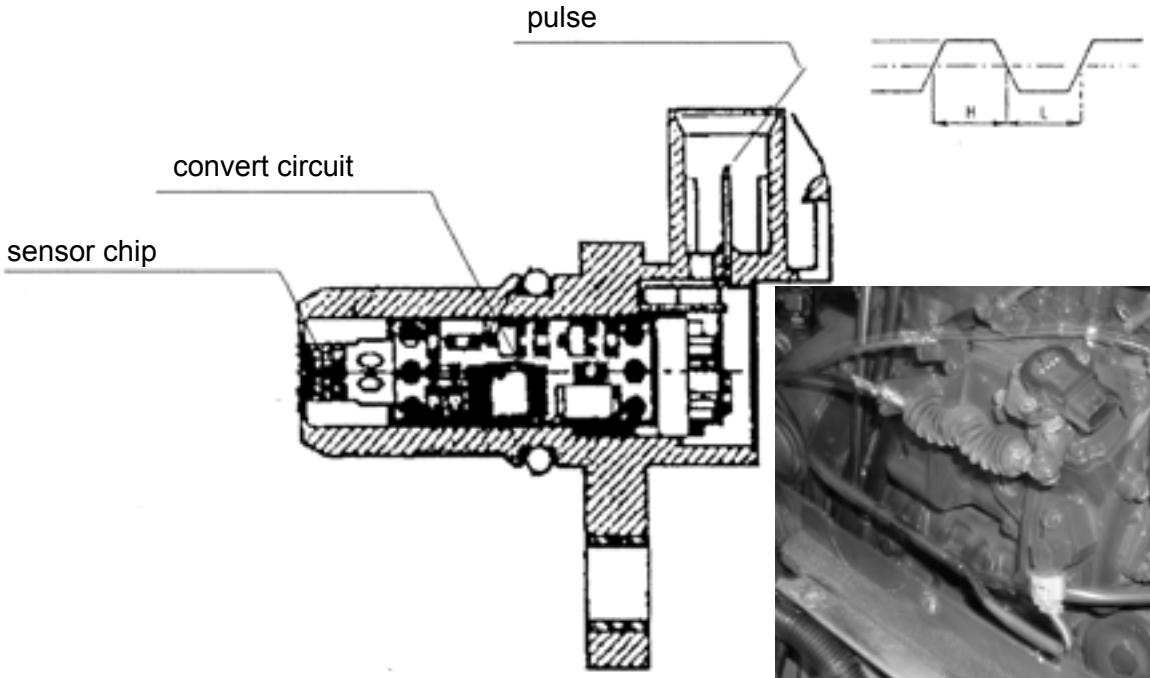

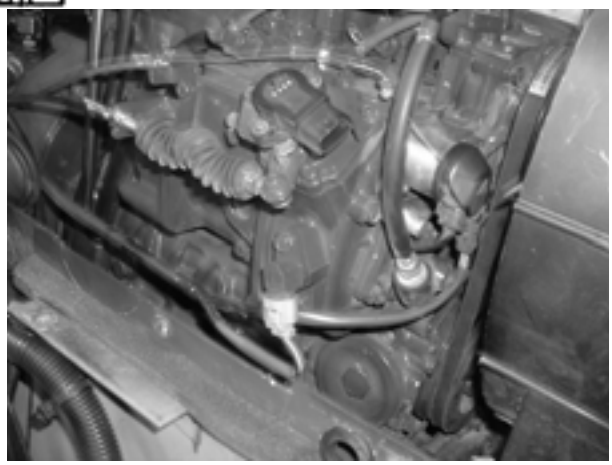

This sensor is composed of a sensor and a rotor. The sensor has a coil wound up around a magnet, and the rotor is of iron with teeth. As the rotor turns, the magnetic flux varies at its peaks and troughs according to the turning speed. Such frequency-dependent change of the magnetic force line generates an induced electromotive force in the coil. The resulting signal is fed to the controller to detect the turning speed.

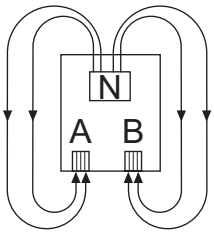

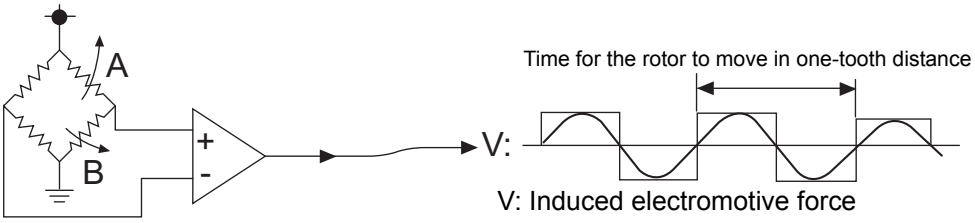

(8) Governor sensor

Code No.:RP421-5371-1

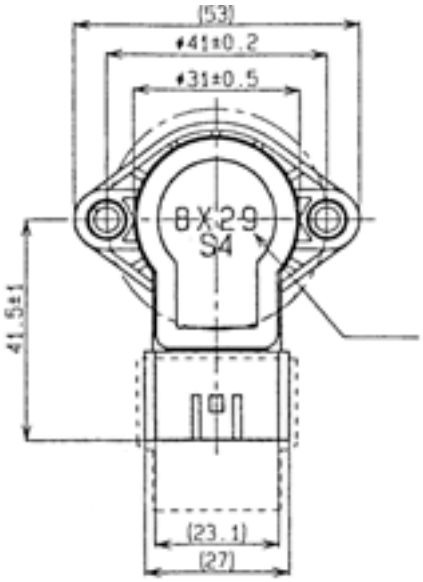

Specifications

1. Rated voltage :DC5V
2. Total resistance :2KΩ ± 20%
3. Insulasion resistance :100MΩ or more
4. Output performance :

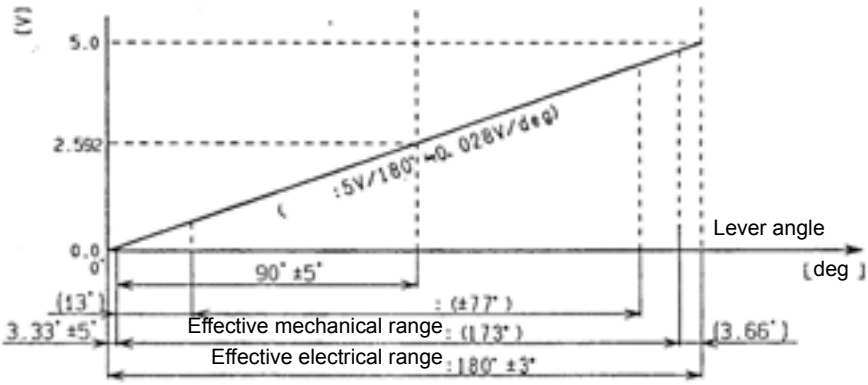

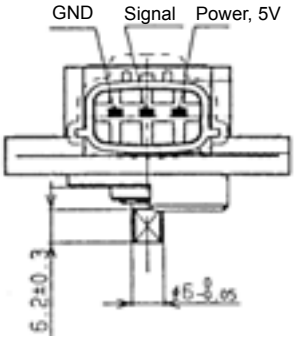

Circuit diagram

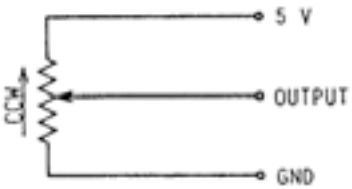

(1) Case
(2) Cover
(3) Roter
(4) Shaft
(5) Resistance
(6) Element terminal
(7) Connector terminal
(8) Slider
(9) Wave washer
(10) Return spring
(11) Rubber seal
(12) E-ring
(13) Washer
(14) Sleeve
C1, C2:Adhesive

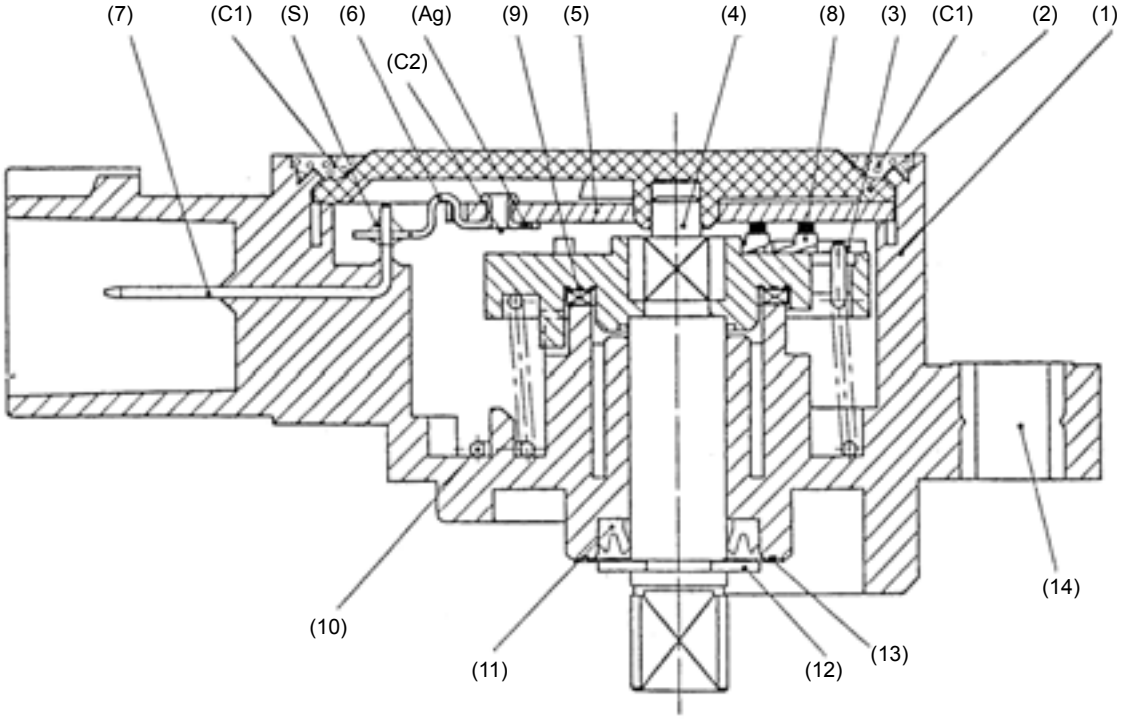

(9) Accel sensor (Electric accelerator)

Code No.

(Accel sensor is in Min. position)

(Accel sensor is in Max. position)

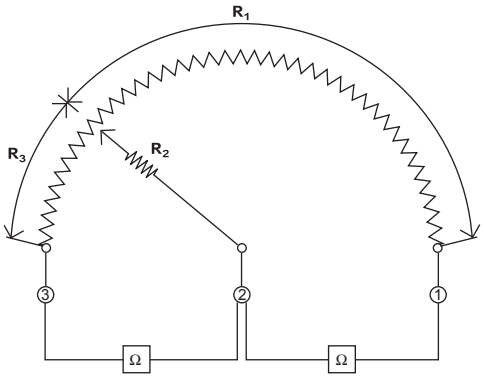

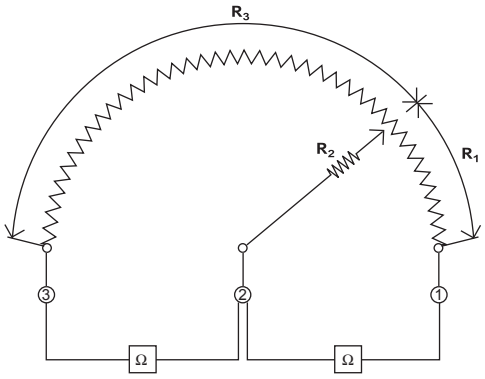

(Sample data)[Ω]

Accel sensor position	Min.	Max.
1-3 R_1-R_2	941	
1-2 R_1+R_2	680	364
2-3 R_2+R_3	285	606

R_2 is contact resistance.
How to get R_2?

$$R_2 = \frac{680 \times 285 \times 941}{2} = 12\ \Omega$$

$$R_2 = \frac{364 \times 606 \times 941}{2} = 14.5\ \Omega$$

R_2=12~14.5 Ω

(10)AI pressure switch

C/N RC411-53681, 25kgf/cm^2, Normal close type

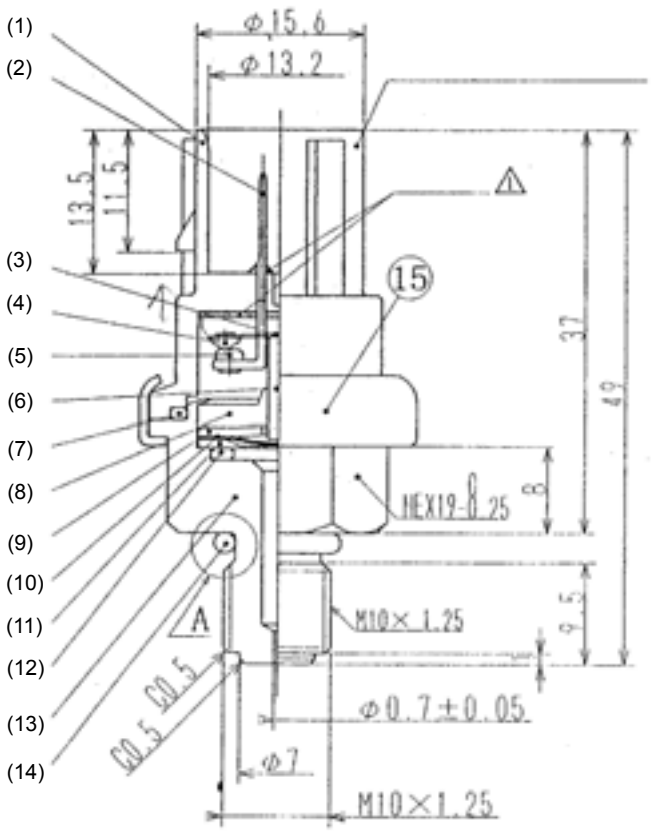

1. Function

When the pressure sensed by the oil pressure detection circuit for auto idle control has dropped below 20 kgf/cm^2, the contact of the AI switch, shown at left, gets closed. The microcomputer picks up the resulting ON signal and sends a command to the AI motor to reach the engine idling speed. The idling speed approach is preset to be 4 seconds after the switch has been turned on by the micro-computer.

When the control lever is moved, on the other hand, the pressure in the hydraulic pilot circuit rises. At 25 kgf/cm^2, the hydraulic pressure pushes the diaphragm as shown at left, which opens the contact. The microcomputer picks up the resulting OFF signal and raises the engine speed up to the accelerator lever rpm setting.

2. Switch specifications

(1) Detection method: Metallic diaphragm
(2) Switching logic: Normally closed (NC)
Continuity resistance =0.2Ω
(3) Operating pressure:
2.45 ± 0.3 MPa (25 ± 3 kgf/cm^2) --> Switch OFF
1.96 ± 0.3 MPa (20 ± 3 kgf/cm^2) --> Switch ON
(4) Insulation resistance: Over 100 MΩ (with DC500V megger)
(5) Code No.: RC411-53681

1	Terminal block
2	Terminal
3	Movable contact plate
4	Movable contact
5	Fixed contact
6	Shaft
7	O-ring A
8	Guide plate
9	Stopper
10	Flex plate
11	Cap
12	O-ring B
13	Coupling
14	O-ring C
15	Clamp plate

f. Main component's function

(1) Auto release function

1. Auto release Circuit diagram & function

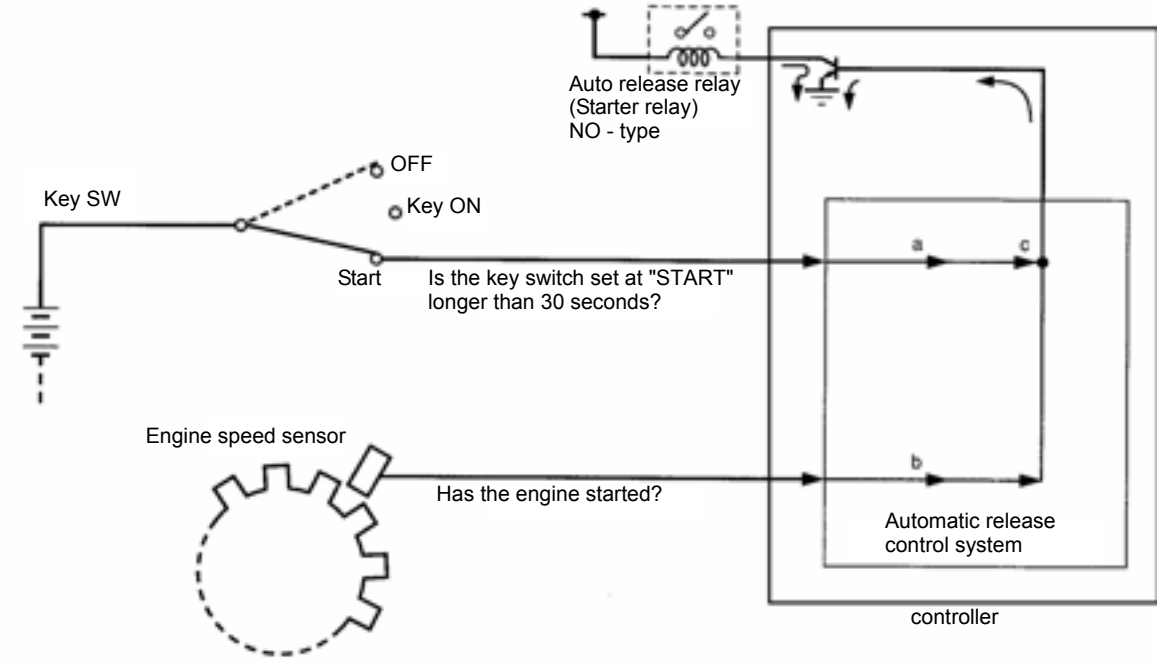

1) Function chart
When in normal operation

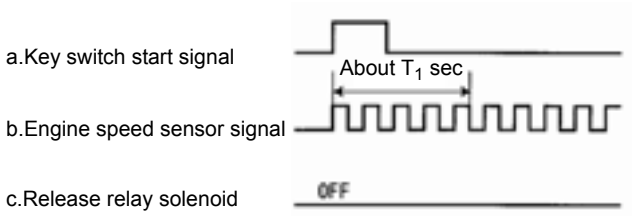

When the key switch is returned after the engine got started, the release relay functions as shown below upon engine speed.

Engine speed		Auto release relay (T_1, T_2)
KX41-3	KX61-3SS ~ 161-3SS	
1000 ≧ N_x	800 ≧ N_x	ON
1001 ~ 1150	801 ~ 950	ON (Within 6 seconds) OFF (After 6 seconds)
1151 ≦ N_x	951 ≦ N_x	ON (Within 0.5 seconds) OFF (After 0.5 seconds)

2) If the engine has started but the key switch fails to return (key switch failure)

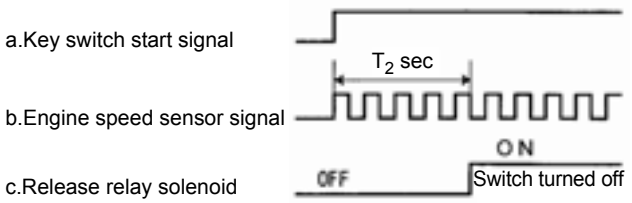

Suppose that the key switch fails to return and the key switch start signal stays on. But if the engine speed sensor signal is fed, the automatic release control system regulates the transistor's base current flow, which turns on the release relay solenoid ON or OFF.

3) If the key switch fails to return and the engine speed sensor is also in trouble

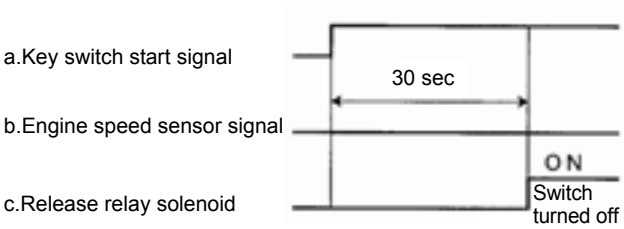

If the key switch start signal is detected to have been on for 30 seconds, the automatic release control system (3) lets the transistor's base current flow, which turns on the release relay solenoid (1) and turns off the relay switch.

	a:Key switch status	b:Engine speed sensor status	c:Release relay solenoid action
(1)	Normal: No particular action	Normal	Normal: No particular action
(2)	Start position → Failure to return	Normal	Relay deactivated 0.5 or 6 seconds according the engine speed.
(3)	Start position → Failure to return	Engine failure to start, or no engine speed sensor signal	Relay deactivated 30 seconds after the key switch turn to "START"

2. Trouble shooting

If Engine Does Not Start

1) Check if the safety lock lever is lifted.
   Make sure that the safety switch is turned OFF.
   Take the following steps, set the unit to tester mode, and check the condition of the safety switch.

   (Service mode)

   KX91-3 → English → Diagnosis → Tester → Lever travel start

   A manual check with a circuit tester is possible.

2) Check if the prevention of start mode reentry is working. (Wait two seconds or more.)
3) Check if the auto release relay is turned OFF.
   Make a manual check with a circuit tester.
4) Check if the wrong model settings are made.
   Depending on the model, the start of the engine is judged at 1,000 rpm or below for KX41-3. Therefore, the release of the starter motor is judged before the startup revolution of the engine is reached.
5) The reason why detecting engine speed is set at 1000 rpm ;
   If 800 rpm is set to detect the engine start - up speed, the controller stops supplying the current to the startor motor.
   Under the low ambient temperature, engine may not start up at around 800 rpm.
   Therefor, in order to make sure the actual engine start, sensing engine speed is set higher by 200 rpm.
   This varies according to the models. Other than KX41-3, the stant of the engine is detected at 800 rpm.

3. Operational flow chart

3-1

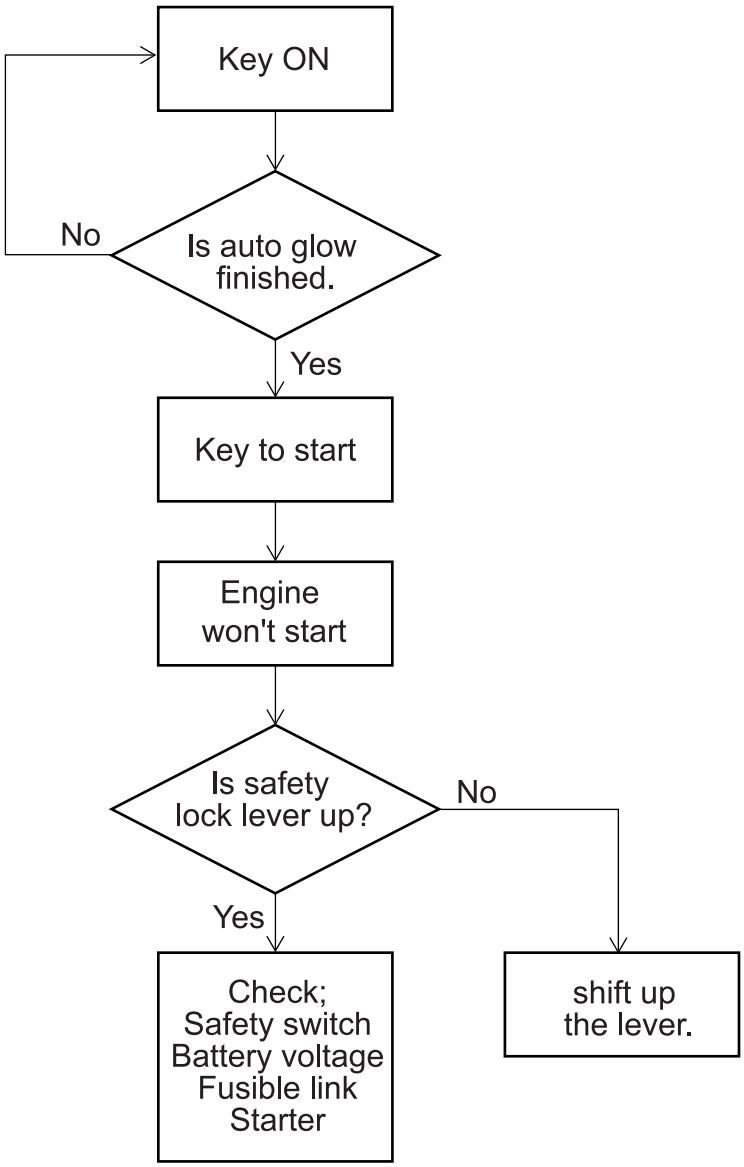

3-2

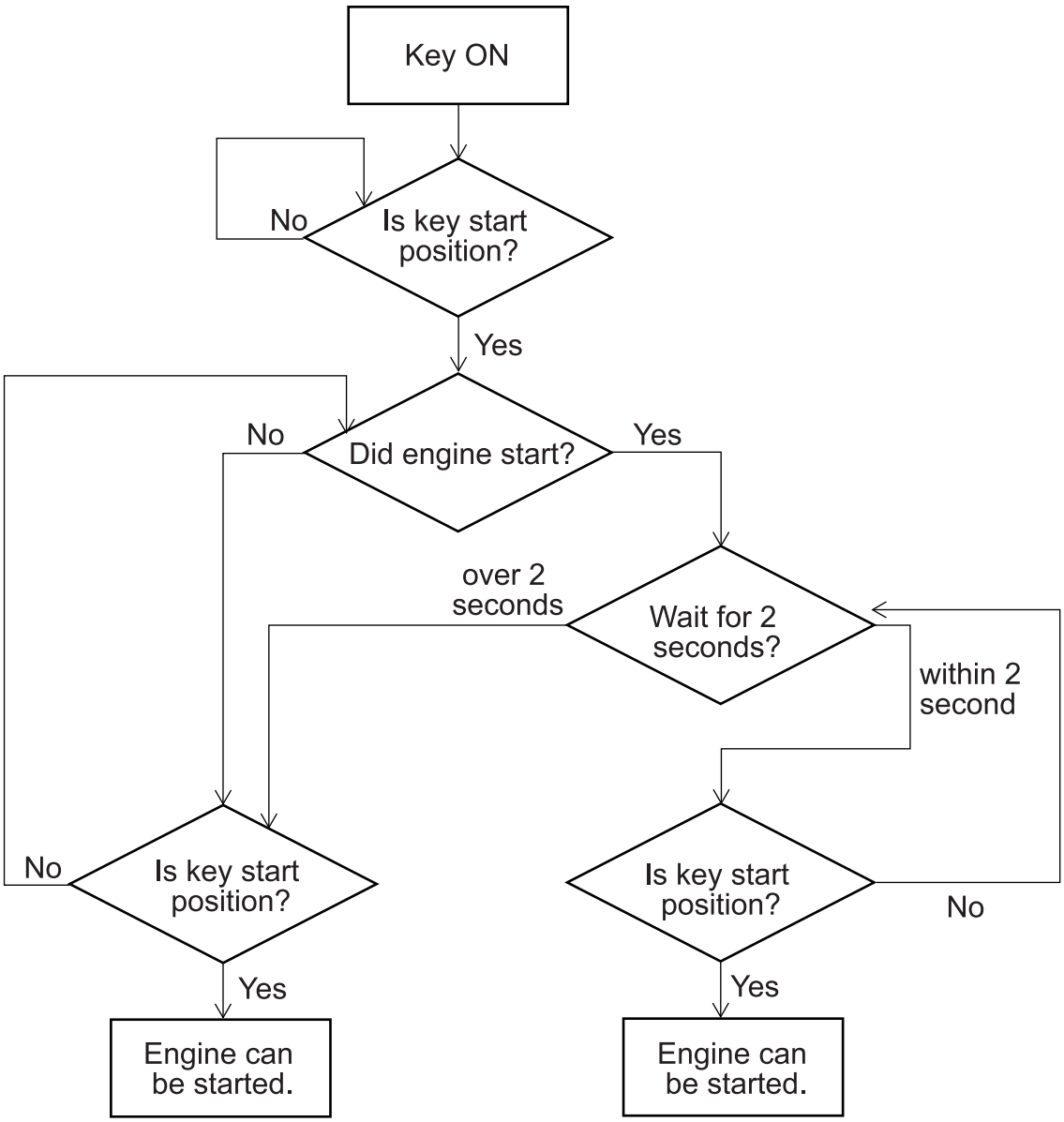
Key ON
Is key start position?
No
Yes
Did engine start?
No
Yes
Wait for 2 seconds?
over 2 seconds
within 2 second
Is key start position?
No
Yes
Engine can be started.
Is key start position?
No
Yes
Engine can be started.

3-3

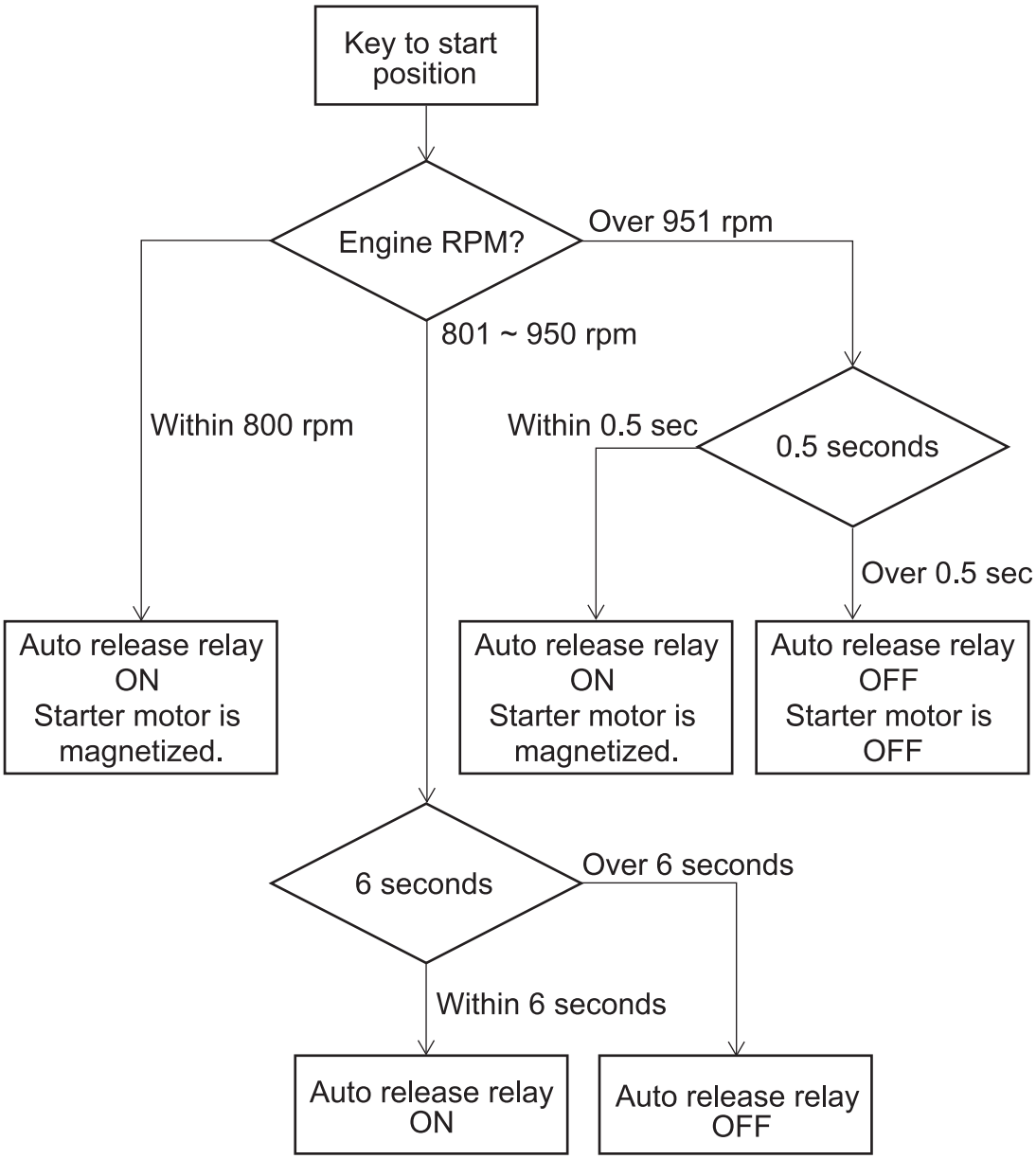

< Engine speed and condition of auto release relay >

Engine speed : N_x		Time : T_1, T_2	Auto release relay
KX61-3 ~ KX161-3S·α	KX41-3		
800 ≧ N_x	1000 ≧ N_x		ON
801 ~ 950	1001 ~ 1150	Within 6 seconds	ON
		After 6 seconds	OFF
951 ≦ N_x	1151 ≦ N_x	Within 0.5 seconds	ON
		After 0.5 seconds	OFF

starter relay = Auto release relay

(2) Travel hi-speed control circuit

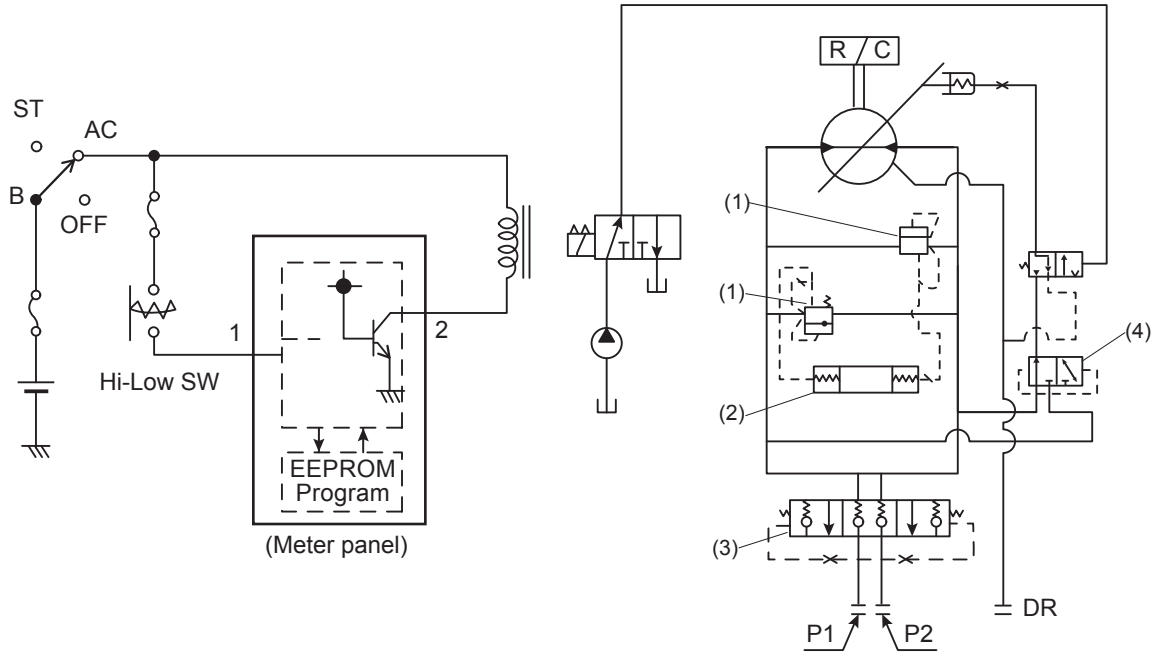

Troubleshooting: Travel hi-speed malfunction

1. Turn the key switch to the ON position to see if 12 V is applied to terminal 2 of the travel hi-speed switch.
2. Press the travel hi-speed switch to see if the 12 V signal comes to terminal 1.
3. Turn on and off the travel hi-speed switch and check the continuity and discontinuity.
4. Check the continuity of the travel hi-speed solenoid coil and measure its resistance.
5. If there is no problem with the above steps, it means the electrical system functions. Now go to the hydraulic system.
6. Possible troubles with the hydraulic system include stuck solenoid spool, poorly performing pilot pump, malfunctioning primary relief valve, stuck Hi-Lo selector spool, etc.

(3) Meter panel (Controller unit)

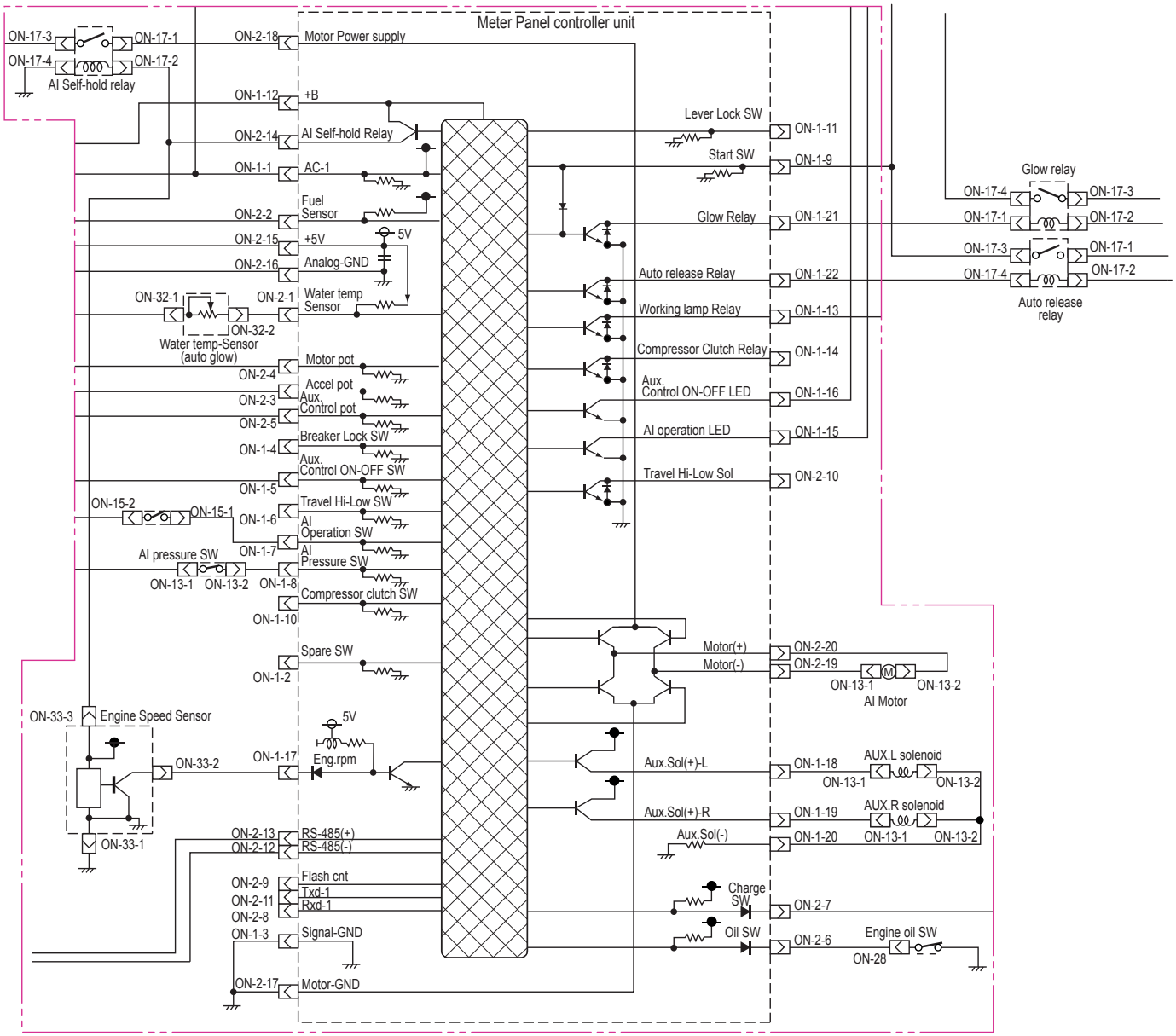

g. Failure Diagnosis

1. Failure display and diagnosis criteria

The following table 1 shows data on failure diagnosis, for operating mode and service mode.

Note:
- Display items of the system in service mode can be checked with the fail record.
- In the case of a warning for fuel scarcity, the buzzer will be turned ON for a moment at five-minute intervals.
- No.11 ~ 61 except 31, 32, 51, 52, 53, 54, 55 will be incorporatrd in future version machine, such as auto idle (AI) model, anxilliary port (AUX) model and anti - theft system model.

Table 1. Failure diagnosis

Display		Buzzer	Lamp	Reset method	Function stop point	EEPROM address	Method of diagnosis
Operating mode	service mode						
1 Fuel	-	5-minute intervals	Yellow	Replenish fuel	---	---	Fuel scarcity rate is 90% min. after 60-s sampling
2 Engine oil	2 Engine oil	Continu-ally	Red	Returns to nor-mal	---	66, 86	At 5 V (normal). The following conditions continue 10 s: oil = L and 800 rpm min.
3 Charge	3 Charge	Momen-tarily	Red	Returns to nor-mal	---	65, 85	At 5 V (normal). The following conditions continue 10 s: charge = L and 800 rpm min.
4 High voltage	4 High voltage	Continu-ally	Red	Turn key OFF	AI AUX	67, 87	At 5 V (normal). A power supply voltage of 18 V min. continues 3 s.
5 Overheat	5 Overheat	Continu-ally	Red	112°C±α max.	AI AUX	77, 97	At 5 V (normal). The following conditions continue: Engine revolution of 800 rpm min. with overheat warning When the water temperature sen-sor is normal, a water temperature of (124 ± α) C min. continues 5 s. (α : Adjustable between -10 C and +10 C.)
11 Accel sensor	11 Accel sensor	Momen-tarily	Red	Turn key OFF	AI	68, 88	At 5 V (normal). The accelerator sensor for AI spec-ifications at 0.25 V max. or 4.75 V min. continues for 0.2 s.
12 Governor sen-sor	12 Governor sensor	Momen-tarily	Red	Turn key OFF	AI	71, 91	At 5 V (normal). The governor sensor for AI specifi-cations at 0.25 V max. or 4.75 V min. continues for 0.2 s.
13 AI motor short	13 AImotor short	Momen-tarily	Red	Turn key OFF	AUX	69, 89	At 5 V (normal). AI specifications. The specifications are presently under consideration.
14 AI motor short	14 AI motor short	Momen-tarily	Red	Turn key OFF	AUX	70, 90	At 5 V (normal). AI specifications. The specifications are presently under consideration.

Display		Buzzer	Lamp	Reset method	Function stop point	EEPROM address	Method of diagnosis
Operating mode	service mode						
21 AUX.volum	21 AUX volum	Momentarily	Red	Cancel AUX	AUX	72, 92	At 5 V (normal). AUX specifications. AUX mode turns ON. The AUX sensor at 0.25 V max. or 4.75 min. continues for 0.2 s.
22 AUX.Solenoid L short	22 AUX. Solenoid L short	Momentarily	Red	Cancel AUX	AUX	73, 93	At 5 V (normal). AUX specifications. AUX mode turns ON. The specifications are presently under consideration.
23 AUX.Solenoid L break	23 AUX.Solenoid L break	Momentarily	Red	Cancel AUX	AUX	74, 94	At 5 V (normal). AUX specifications. AUX mode turns ON. The specifications are presently under consideration.
24 AUX.Solenoid R short	24 AUX.Solenoid R short	Momentarily	Red	Cancel AUX	AUX	75, 95	At 5 V (normal). AUX specifications. AUX mode turns ON. The specifications are presently under consideration.
25 AUX.Solenoid R short	24 AUX.Solenoid R short	Momentarily	Red	Cancel AUX	AUX	76, 96	At 5 V (normal). AUX specifications. AUX mode turns ON. The specifications are presently under consideration.
31 Lift up unload lever	-	Momentarily	Yellow	Wait for 5 s, then disappear	Engine does not start	---	The key is shifted to the start position with the lever lock moved down.
32 Service hour	-	Momentarily	Yellow	Wait for 10 s	---	---	The specified hour meter is set.
33 Key is wrong	-	Momentarily	Yellow	Wait for 3 s	Engine does not start	---	Theft prevention specifications The wrong key is used to start the engine. The specifications are presently under consideration.
34 Owner tag	-	Momentarily	Yellow	Wait for 3 s	Engine does not start	---	Theft prevention specifications The owner tag is used to start the engine. The specifications are presently under consideration.
-	51 Coolant sensor	Momentarily	Red	Turn key OFF	---	82, 102	At 5 V (normal). A water temperature of -30 C max. or 140 C min. continues for 1 s.
-	52 Fuel sensor	Momentarily	Red	Turn key OFF	---	81, 101	At 5 V (normal). The fuel sensor at 2 V min. continues for 10 s.
53 Sensor supply short 5V	53 Sensor supply short 5V	Momentarily	Red	Turn key OFF	LCD turns OFF AI AUX 5-V output turns OFF	79, 99	5-V short-circuiting detection terminal at H level continues for 0.1 s.
54 Sensor supply short 12V	54 Sensor supply short 12V	Momentarily	Red	Turn key OFF	AI AUX always 0 rpm	80, 100	At 5 V (normal). The 12-V short-circuiting detection terminal at H level continues for 0.1 s.
55 Meter controller error	-	Momentarily	Red	Turn key OFF	AI AUX	78, 98	The rightmost 16 bits of the added value of addresses 36 through 50 do not coincide with the value of address 64.
-	61 AI motor retricrd	Momentarily	Red	Press accelerator	---	83, 103	At 5 V (normal). AI specifications A motor current of 6 A min. continues for 3 s.

2. Fail record in EEPROM

If the sensor or actuator line has an error, the output of the actuator will stop and the LCD will display the contents of the error while the error point is written to the EEPROM. Fig. 2 and fig. 3 show the address allocation of the EEPROM.

2-1 Error Storage Method

If an error result, data in a corresponding EEPROM address will be overwritten. The data in the corresponding address has a capacity of 2 x 16 bits. The first address (1 x 16 bits) has an hour meter record for the latest error. The other address (1 x 16 bits) has an hour meter record of the first error along with the total number of errors in the past. The data will be written to the EEPROM after rounding off all hour meter values for less than one hour (see fig.1).

Hour meter data and the number of errors (1) will be written to both addresses if an error occurs for the first time. The last hour meter data will be converted into present hour meter data for errors on and after the second time. The count will remain 15 regardless of whether the actual number of errors exceeds 15, and only data on the last hour meter data will be overwritten.

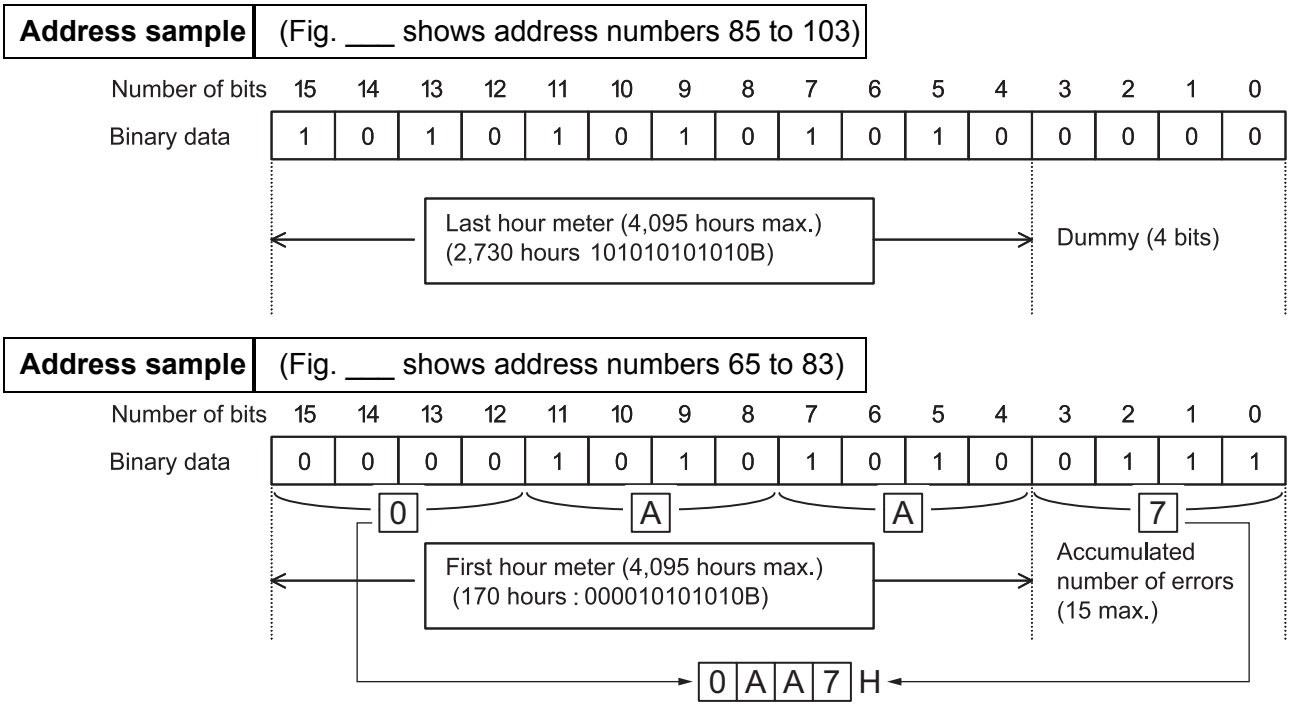

Fig. 1 Error Data Storage Method

2-2 Number of Errors

Data is stored in four bits. Therefore, the maximum number of errors is limited to 15. The count increases by one if an error occurs after the key is turned ON. Once the key is turned ON, however, the count increases only by one until the key is turned OFF.

(Example) Binary to decimal

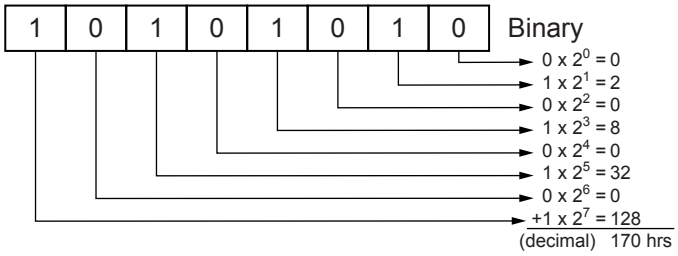

2-3 Erasing Method of Error Log

The error log will be deleted by selecting Error Log Delete in Diagnosis Mode. In the software, only the 0th to third bits (the accumulated number of errors) in EEPROM addresses 85 through 103 will be zero cleared, but hour meter data will not be zero cleared. Error Log Delete in Diagnosis Mode judges that there is no error log if the number of errors is zero.
Hour meter data will not be deleted after executing Error Log Delete in Diagnosis Mode. Therefore, by dumping the EEPROM, hour meter data for errors will be known. This will make troubleshooting possible if the LCD meter is returned to the factory due to a failure after shipping.
The contents of addresses 65 through 103 are zero cleared with the PC before shipping.

Address No.	Contents & purpose to use
0 ~ 35	Hour meter
36	Machine model (Ref.1)
37	Optional item (Ref.2)
38 ~ 44	AI control data
45 ~ 50	Thumb control data
51 52	Overheat control data
53	Language (Ref.3)
54 ~ 63	Machine hours & times
64 ~ 104	Machine failure warning
105 ~ 127	Original manufacturer use Address No. 118 : Machine serial No.

Fig.2.Address and contents of EEPROM

Ref.1 : 0:KX41-3, 1:KX61-3, 2:KX71-3, KX91-3, 4:KX101-3, 5:KX-121-3, 6:KX161-3, ···
Ref.2 :

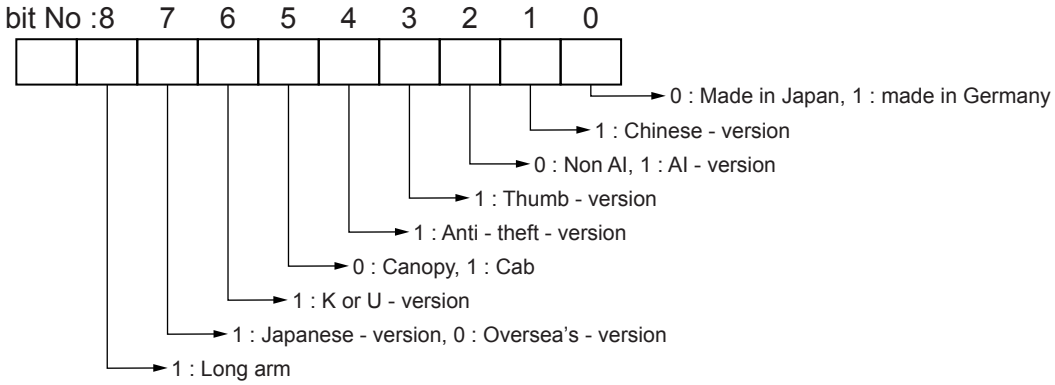

Address No.	Contents of failure	Data bit
64	Check sum, 36 ~ 50	The leftmost 12 bits display the hour meter value of the last error. The rightmost four bits display the accumulated number of errors.
65	3 Charge	
66	2 Engine oil	
67	4 High voltage	
68	11 Accel sensor	
69	13 AI motor short	
70	14 AI motor break	
71	12 Governor sensor	
72	21 Aux.volume	
73	22 Aux.solenoid L short	
74	23 Aux.solenoid L break	
75	24 Aux.solenoid R short	
76	25 Aux.solenoid R break	
77	5 Overheat	
78	55 Meter controller error	
79	54 Sensor supply short 5V	
80	53 Sensor supply short 12V	
81	52 Fuel sensor	
82	51 Coolant sensor	
83	61 AI motor retricted	
84		reserve
85	3 Charge	The leftmost 12 bits display the hour meter value of the last error. The rightmost four bits are dummy bits.
86	2 Engine oil	
87	4 High voltage	
88	11 Accel sensor	
89	13 AI motor short	
90	14 AI motor break	
91	12 Governor sensor	
92	21 Aux.volume	
93	22 Aux.solenoid L short	
94	23 Aux.solenoid L break	
95	24 Aux.solenoid R short	
96	25 Aux.solenoid R break	
97	5 Overheat	
98	55 Meter controller error	
99	54 Sensor supply short 5V	
100	53 Sensor supply short 12V	
101	52 Fuel sensor	
102	51 Coolant sensor	
103	61 AI motor retricted	

Fig.3 EEPROM Addresses for Error Log

3. self-diagnosis of controller unit

3-1 Purpose

The error diagnosis of the meter is possible by using the self-diagnostic harness. The self-diagnostic function of a conventional model provided with a microcontroller can detect failures in the microcontroller only after all the failure diagnosis of the electrical devices other than the microcontroller is made. This kind of method requires time. Furthermore, there is a fear in the accuracy of the diagnosis.
By connecting the self-diagnostic harness to the meter and applying voltage from the battery, the self-diagnostic program built into the meter will run, thus making the self-diagnosis of the incorporated hardware of the meter possible with the inputs and outputs of the meter automatically activated and checked.

Note:
It is not 100% possible to make the perfect self-diagnosis of the hardware of the meter, however, because not all hardware components built into the meter are checked.

3-2 Operation Procedure

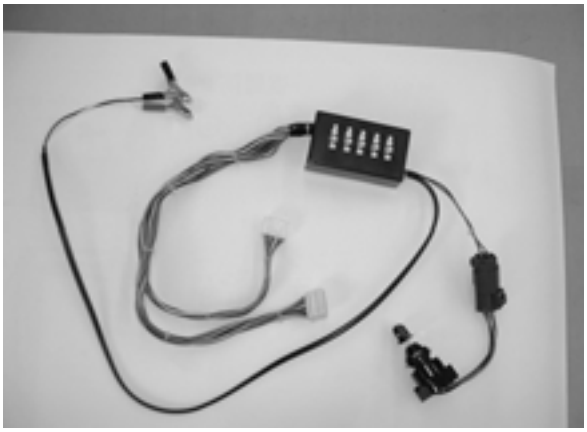

(1) Grips for battery terminals
(2) Couplers for the meter
(3) Key switch to ON or OFF
(4) Switch box for testing

1. Dismount the meter from the main harness of the equipment and connect the meter to the self-diagnostic harness.

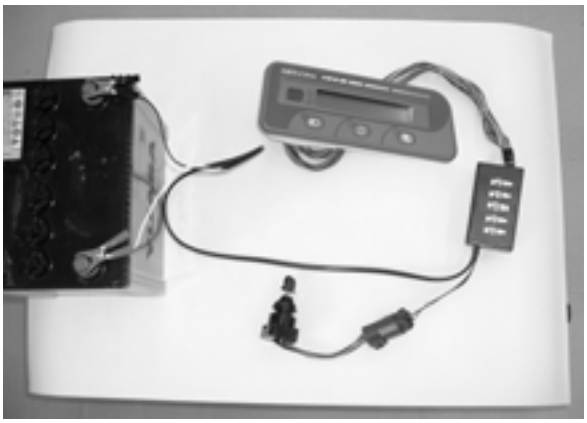

2. Connect the 12-V terminal and negative terminal of the self-diagnostic harness to the battery.

3. Self-diagnosis starts automatically.

The red and yellow lamps flash alternately.

The LCD of the meter flashes black and white alternately.

The lamp as shown in the illustration on the right-hand side turns ON and OFF repeatedly.

The buzzer beeps.
The backlight of the meter turns ON and OFF repeatedly.

4. If the following message appears in approximately one minute, the hardware in the meter is considered normal.

Finish Key off

5. If any one out of numbers 0 through number 12 specified in table 2 is displayed, the meter has a failure.

6. If the lamp is kept turned ON, and three LED light up, then the switches, lamp and LED are in normal condition.

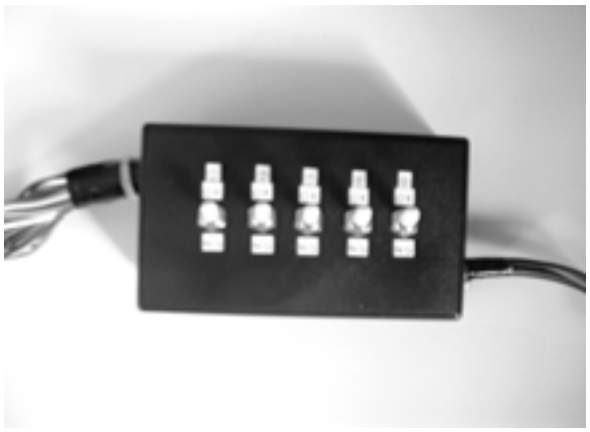

7. As for the training purpose, we developed to install the switch box as shown in the photo.
   As a test, push on of the switch to NG position and let it run the self-diagnosis test.
   Then the pre-set failure number will be displayed on the LCD screen.

Example : No.1 switch is being pushed to NG position.

Note : The self-diagnosic harness will be provided to Kubota Distributors, KTC, KCL, KTA, KE, KUK and KBU only.
When in need of the failure diagnosis of the meter panel, please contact them.

3-3 Failure Display Number of Self-diagnostic Function

Table 2. Self - diagnosis of controller, items and methods

	Check item	Check parts	Check methods	Fail indication No.
2	Check sum	CPU ROM	Implement self-checksum.	0
3	Input & output	Glow relay output RS-485 (negative) (positive) flash TXD, RXD input	Turn OFF the glow relay and make sure that pin 29 (RXD2 power 7.1) is set to low level. Turn OFF the glow relay and make sure that flash RXD TXD input is set to high level.	1
	Input & output	Glow relay output RS-485 (negative) (positive) flash TXD, RXD input	Turn ON the glow relay and make sure that pin 29 (RXD2 port 7.1) is set to low level. Turn ON the glow relay and make sure that the flash RXD TXD input is set to low level.	
4	Input & output	Auto release relay output, lever lock switch input	Turn OFF the auto release relay and make sure that the lever lock switch is set to high level.	2
	Input & output	Auto release relay output, lever lock switch input	Turn ON the auto release relay and make sure that the lever lock switch is set to low level.	
5	Input & output	Working lamp relay output, start switch input	Turn OFF the working lamp relay and make sure that the start switch is set to high level.	3
	Input & output	Working lamp relay output, start switch input	Turn ON the working lamp relay and make sure that the start switch is set to low level.	
6	Input & output	Compressor clutch relay output, engine rpm input	Turn OFF the compressor clutch relay and make sure that the engine rpm is set to low level.	4
	Input & output	Compressor clutch relay output, engine rpm input	Set the compressor clutch relay to high level and make sure that the engine rpm is set to high level.	
7	Input & output	AUX LED output, charge input	Turn OFF the AUX LED and make sure that the aircon switch is set to high level.	5
	Input & output	AUX LED output, charge input	Turn ON the AUX LED and make sure that the air-con switch is set to low level.	
8	Input & output	AI LED output, oil input	Turn OFF the AI LED and make sure that the oil is set to low level.	6
	Input & output	AI LED output, oil input	Turn ON the AI LED and make sure that the oil is set to low high level.	
9	Input & output	Travel sol output, aircon switch input	Turn OFF the travel sol and make sure that the charge is set to low level.	7
	Input & output	Travel sol output, aircon switch input	Turn ON the travel sol and make sure that the charge is set to high level.	

	Check item	Check parts	Check methods	Fail indication No.
10	Input & output	Motor Tr1, Tr2, Tr3, and Tr4 output AI operation switch input, travel switch input	Motor Tr1, Tr2, Tr3, and Tr4 are set to low output level. The AI operation switch is set to low level. The travel switch is set to low level.	8
	Input & output	Motor Tr1, Tr2, Tr3, and Tr4 output AI operation switch input, travel switch input	Motor Tr1 is set to high output level and Tr2, Tr3, and Tr4 are set to low output level. The AI operation switch is set to high level. The travel switch is set to high level.	
	Input & output	Motor Tr1, Tr2, Tr3, and Tr4 output AI operation switch input, travel switch input	Motor Tr1 and Tr4 are set to high output level and Tr2 and Tr3 are set to low output level. The AI operation switch is set to high level. The travel switch is set to low level.	
	Input & output	Motor Tr1, Tr2, Tr3, and Tr4 output AI operation switch input, travel switch input	Motor Tr2 is set to high output level and Tr1, Tr3, and Tr4 are set to low output level. The AI operation switch is set to high level. The travel switch is set to high level.	
	Input & output	Motor Tr1, Tr2, Tr3, and Tr4 output AI operation switch input, travel switch input	Motor Tr2 and Tr3 are set to high output level and Tr1 and Tr4 are set to low output level. The AI operation switch is set to low level. The travel switch is set to high level.	
11	Input & output	AUX sol (positive) (R) output, compressor clutch switch input	Turn OFF the AUX sol (positive) (R) and make sure that the compressor clutch switch is set to low level.	9
	Input & output	AUX sol (positive) (R) output, compressor clutch switch input AN2_7 input	Turn ON the AUX sol (positive) (R) and make sure that the compressor clutch switch is set to high level. The AN2_7 AD value varies more by 25 mV or more from the value with the input turned OFF. From theoretical values, 12 V and 240 Ω: 50 mA Voltage fluctuation corresponding to 50 mA: 50 mV	
12	Input & output	AUX sol (negative) (L) output, AI pressure switch input	Turn OFF the AUX sol (negative) (L) and make sure that the AI pressure switch is set to low level.	10
	Input & output	AUX sol (negative) (L) output, AI pressure switch input	Turn ON the AUX sol (negative) (L) and make sure that the AI pressure switch is set to high level.	
13	Input & output	AI self-hold relay output, breaker switch and AUX switch input	Turn OFF the AI self-hold relay and make sure that the breaker switch and AUX switch are set to low level.	11
	Input & output	AI self-hold relay output, breaker switch and AUX switch input	Turn ON the AI self-hold relay and make sure that the breaker switch and AUX switch are set to high level.	
14	AD (Analog and digital conversion)	fuel sensor	Check with the microcomputer that the AD value is 1.8 V ± 0.15.	12
15	AD (Analog and digital conversion)	water temp sensor	Check with the microcomputer that the AD value is 2.5 V ± 0.15.	
16	AD (Analog and digital conversion)	motor potention sensor	Check with the microcomputer that the AD value is 3.75 V ± 0.15.	
17	AD (Analog and digital conversion)	accel potention sensor	Check with the microcomputer that the AD value is 2.5 V ± 0.15.	
18	AD (Analog and digital conversion)	AUX potention sensor	Check with the microcomputer that the AD value is 1.25 V ± 0.15.	

FYI (For your information)

Check Sum Error

1. A check sum error is checked to see if the contents of the program for microcomputer control are corrupted.
2. The control program is saved in the ROM of the CPU. Once data is written to the ROM and shipped to the market, the data cannot be written in the market.
3. The total sum of the data in each address of the control program is obtained in advance and stored as check sum data prepared while in normal operation.
4. When the key is ON, the microcomputer calculates the total sum of the data in each address of the control program in self-control of the microcomputer. The microcomputer checks if the results coincide with the check sum data prepared while in normal operation (i.e., at the time of writing the program). The microcomputer will go to the next step after the microcomputer checks if the results are found normal.
5. If the data does not coincide, the microcontroller judges that the program is illegal. In that case, a check sum data error will result and an error alarm will be output. Error No. = 55
6. The program data can be reversed if the LSI in the controller partly fails to operate due to external environmental factors, such as abnormal temperatures or excessive shock. That is the reason the microcomputer makes this check when the key is turned ON, thus preventing the microcomputer resulting in out-of-control conditions due to program failures.

3-4 Functions of Self-diagnostic Harness

The harness short-circuits the input and output terminals of the meter in advance, switches the respective inputs of the meter ON and OFF in sequence, and checks if the data on the output side is normal.

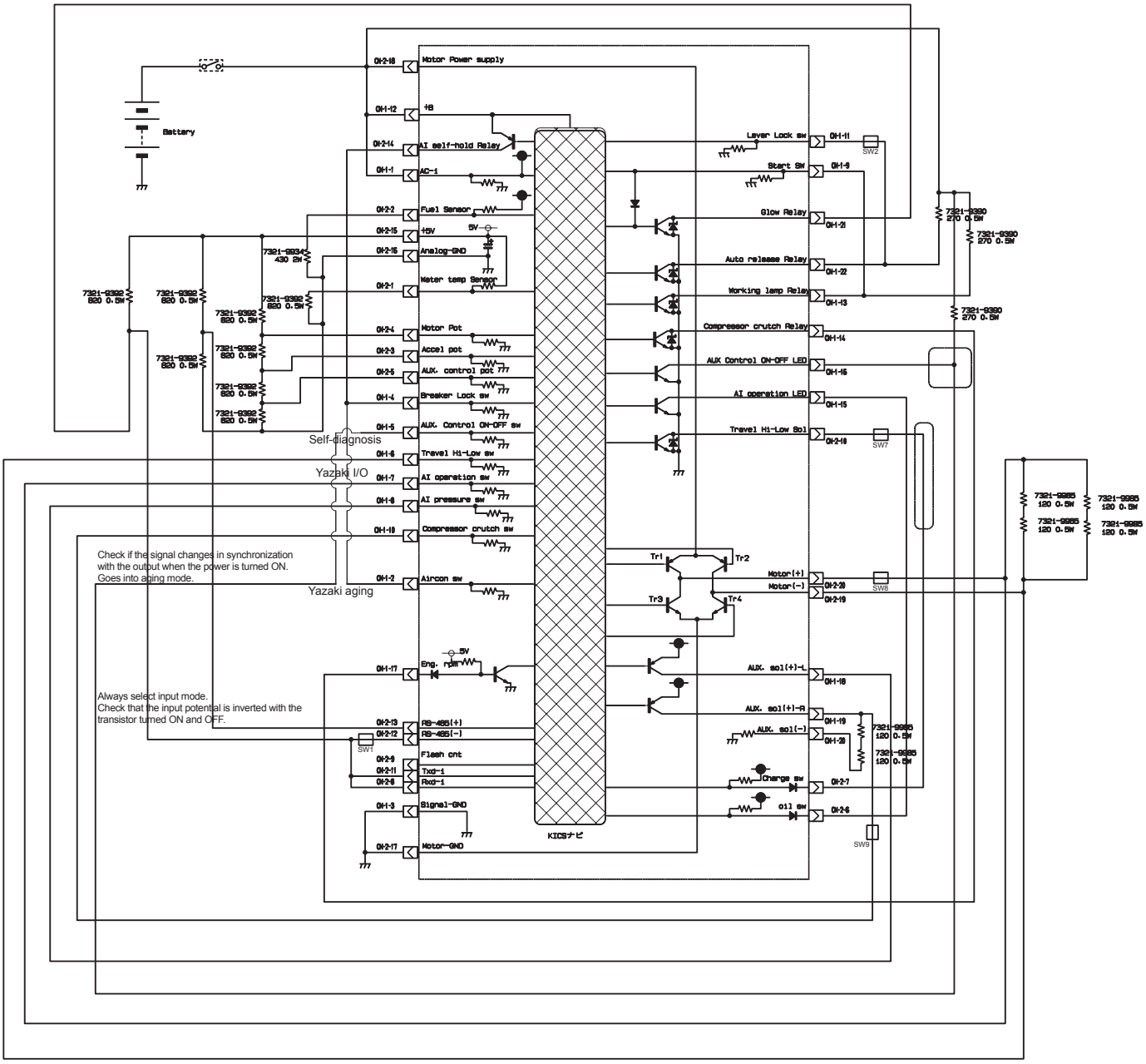

Note : Yazaki I/O and aging and only original manufacturer's use only.
SW1, 7, 8, 9 are for your test and training purpose.

h. Service mode flow chart

1. General

1-1 There are sevral flow charts, depending on the models or machine - versions as below.

1) KX41-3, KX61-3, and KX71-3 have one identical service mode flow chart.
   Refer to the correspondent WSM.
2) KX91-3S, U35S and U35-3S for KTC, KCL and KTA have the flow chart which dosen't include AI - version but includes S/P (Service port) - version.
3) KX121-3S, 161-3S and U45-3S for KTC, KCL and KTA have the flow chart which includes AI - version and S/P (Service port) - version.
4) EU - version models of KX91-3α, 101-3α, 121-3α, 161-3α, U35-3α and U45-3α have AI (Auto idle) and S/P (Service port) - version.
5) The service mode flow chart of anti-theft version will be added to the EU - version machine in the appropriate future.
   This will be announced later in the manual for the anti-theft-version.

1-2 How to enter the service mode?

While pushing the display-select-switch, turn the main key to ON position. Then you'll be in the service mode.
The model name which was pre-set will come to appear on the LCD screen.

1-3 What do the arrows indicate?

↓ vertial to down ; You're required to push the selector switch for a short time. Just one touch push. Then you'll proceed to the down menu.
↑ vertial to up ; Similar to above. Just one touch push. Then you'll return to the top menu of the same column.
→ horizonal to right ; Push the selector switch for a long time until you hear a pi-sound. Then You'll proceed to the next right.
← horizonal to left ; Similar to above. Push for a long time. This is only attached to the Back tier. This arrow indicates to go back to the top menu of the previous tier.

1-4 This service mode flow chart is diivded into two zones.

One is for ordinary service personnel to carry out the troubleshooting of the machine if needed.
The other is for only the authorized personnel to proceed several important machine set-up, adjustment and troubleshoothing in detail.

Those are ;
1) Machine model set-up
2) AI - or Non - AI version selection
3) Engine idle speed set-up
4) Service port system set-up
5) Service warning set-up
6) Circuit check for wire harness disconnection
7) etc.

1-5.What should you do in the following case?

Cases	action to be taken
(1) Renewal of a meter panel. Customer purchased a new meter panel from the spare part center. Or change the meter panel to another machine model.	1) Machine model set-up 2) AI or Non - AI selection 3) AI set-up (Idle & max.speed) 4) Service warning set-up 5) S/P knob set-up 6) S/P valve set-up 7) Overheat warning set-up
(2) Replace from a canopy to a cab or vice versa.	1) Idle speed set-up
(3) Renew a S/P knob	1) S/P knob initial set-up
(4) Renew a S/P valve	1) S/P valve initial set-up
(5) Change a service port attachment	1) S/P feeling adjustment
(6) Different native language speaking operator or service presonnel	1) Selection of language This is only EU - version and KCL - version.

2. Service mode flow

2-1 KTC KCL KTA Service mode flow U35S U35-3S KX91-3S (S/P) ver 1.20

How to enter the service mode.
While pushing the display-select-switch , turn the main key to ON position.
Then you are in this mode.

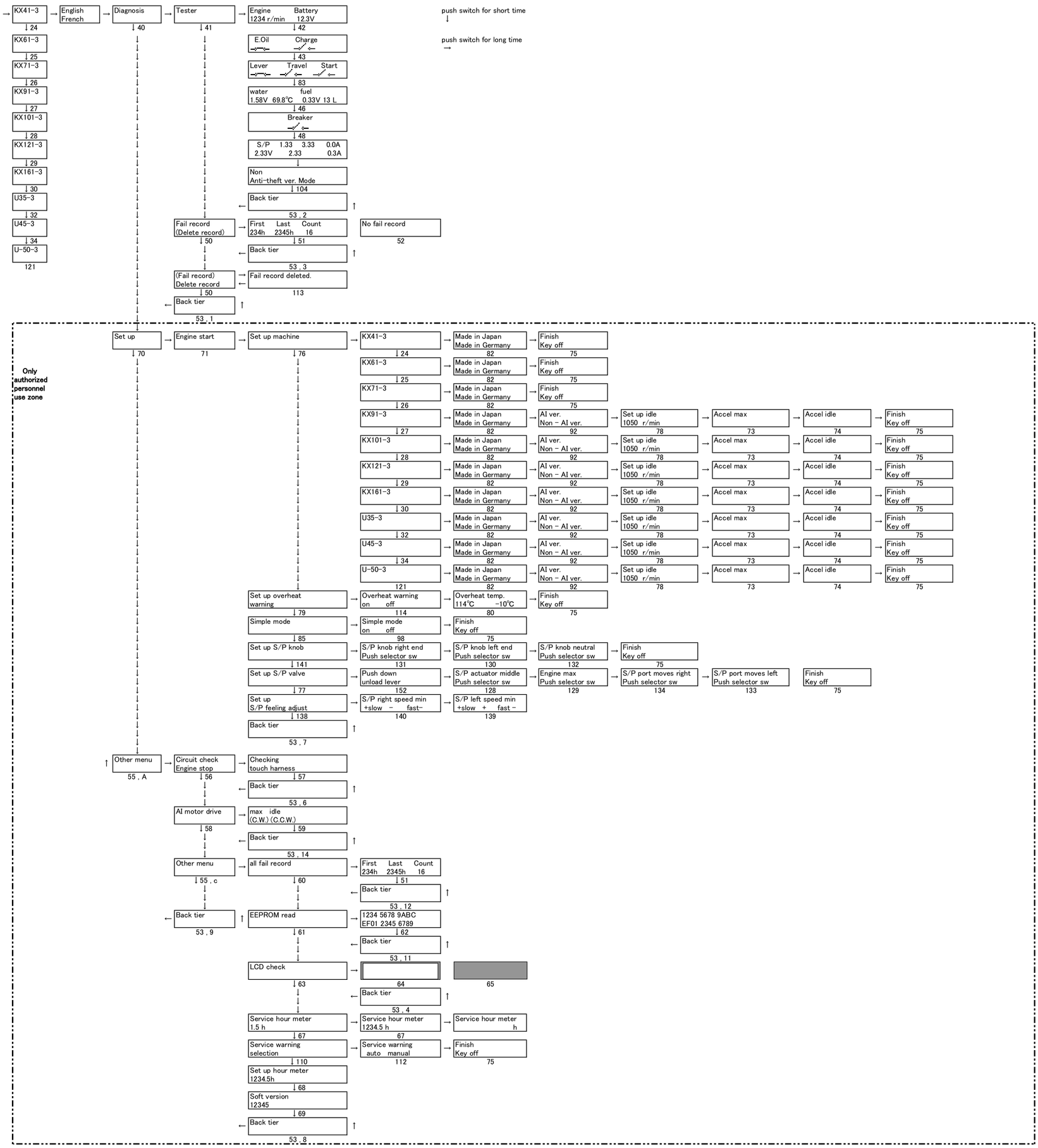

https://truckmanualshub.com/

2-2 KTC KCL KTA Service mode flow KX121-3S KX161-3S U45-3S (AI, S/P) ver 1.20

How to enter the service mode.
While pushing the display-select-switch , turn the main key to ON position.
Then you are in this mode.

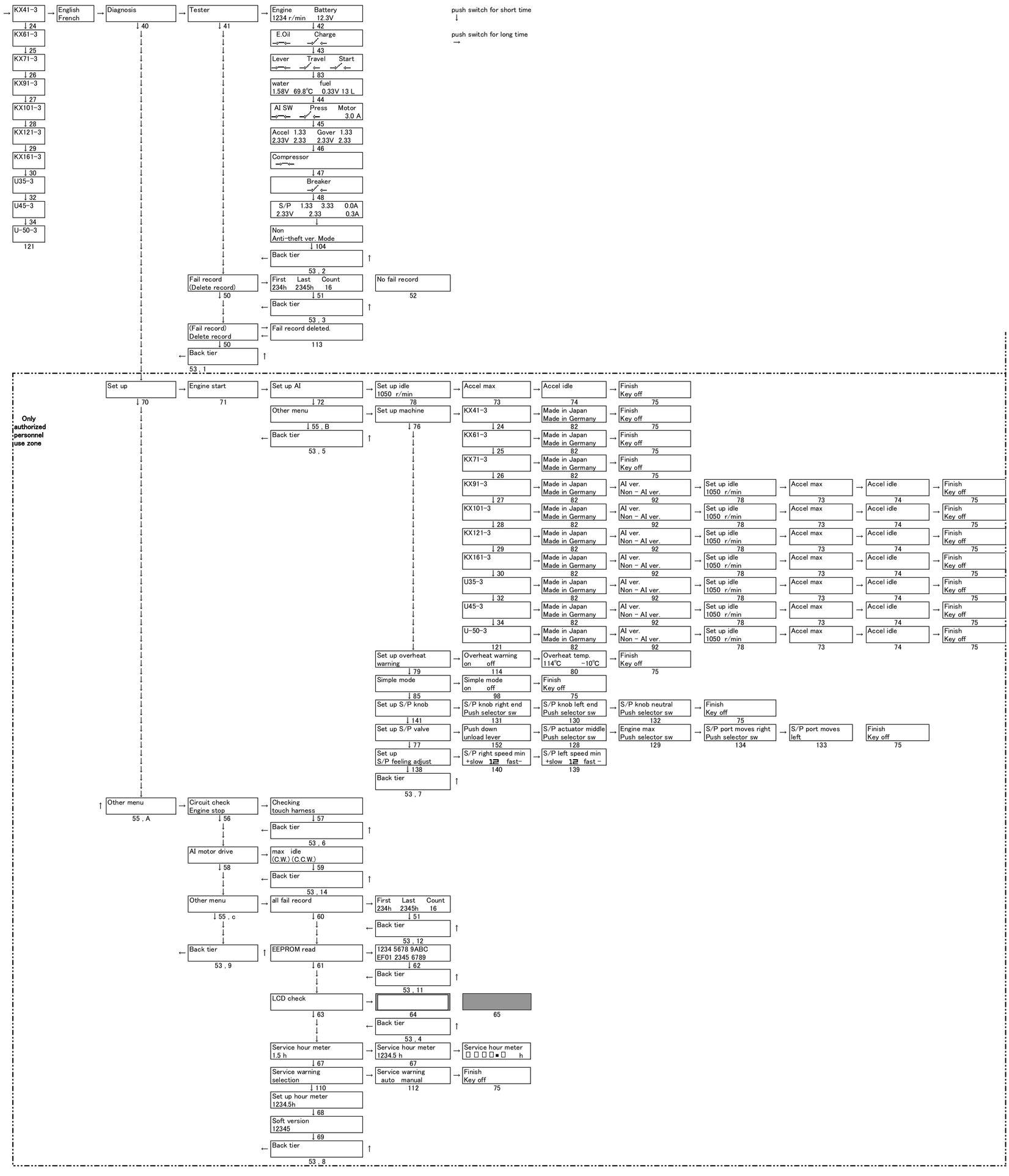

https://truckmanualshub.com/

2-3 EU service mode KX91-3α KX101-3α KX121-3α KX161-3α U35-3α U45-3α (AI, S/P) ver 1.20

How to enter the service mode.
While pushing the display-select-switch , turn the main key to ON position.
Then you are in this mode.

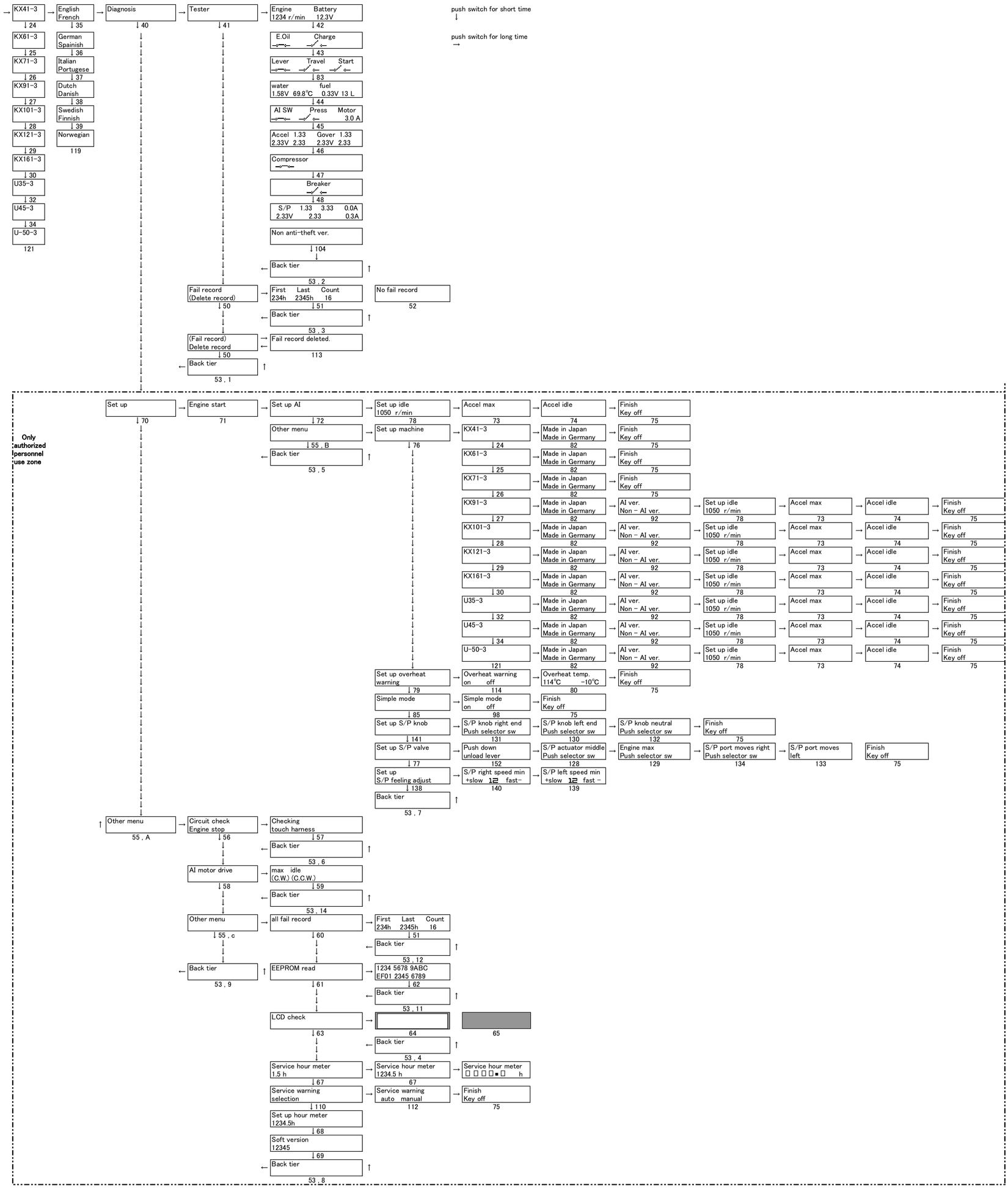

https://truckmanualshub.com/

https://truckmanualshub.com/

i. Component layout

1. KX91-3S·α, 101-3·α, U35S, U35-3S·α electrical wirling

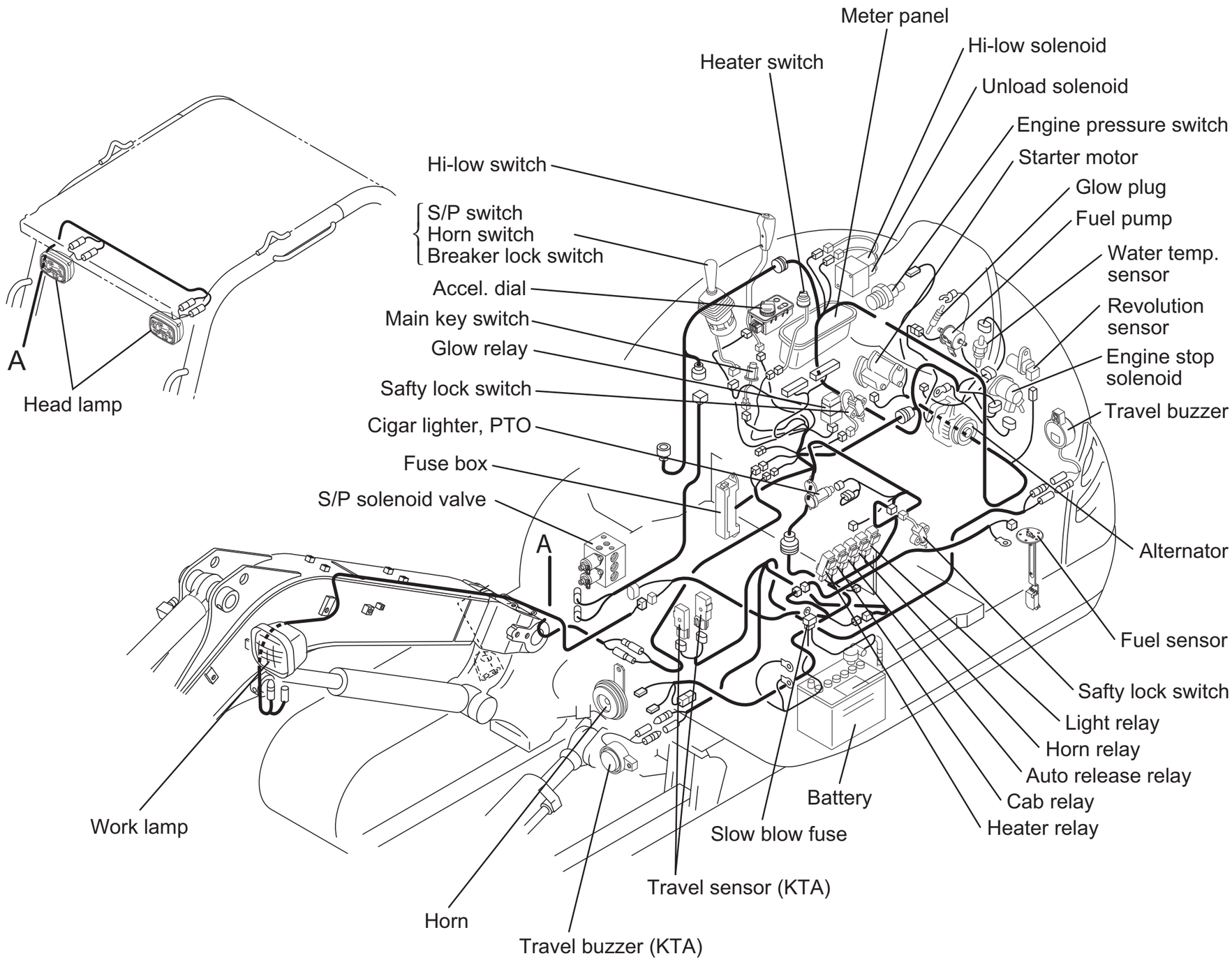

2. KX121-3S·α, KX161-3S·α electrical wiring, A/C

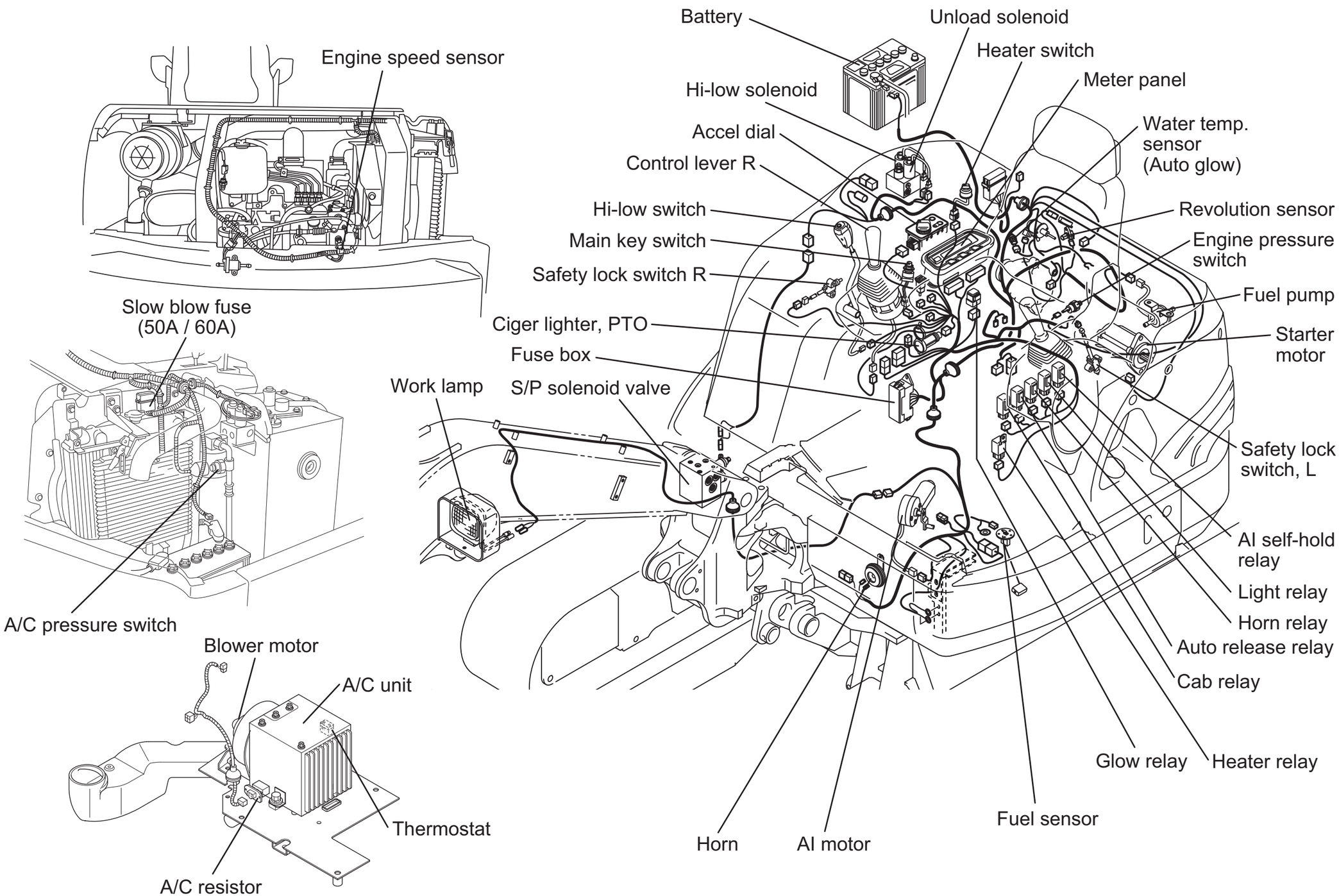

3. KX121-3S·α, KX161-3S·α electrical wiring, except A/C

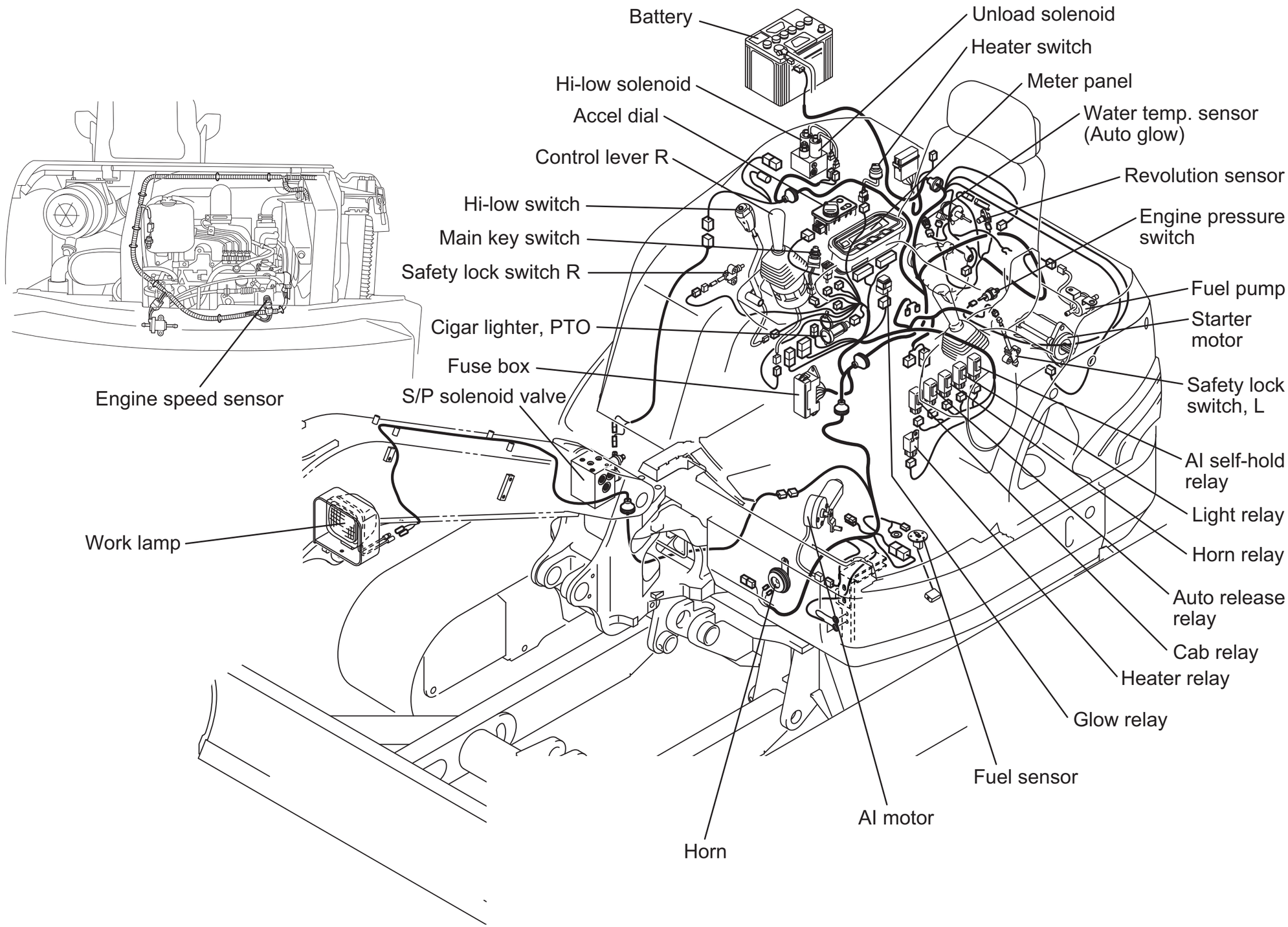

j. Circuit wiring diagram

1. KX91-3S·α,101-3α, 121-3S·α, 161-3S·α, U35S, U35-3S·α, U45-3S·α, (S/P, AI)

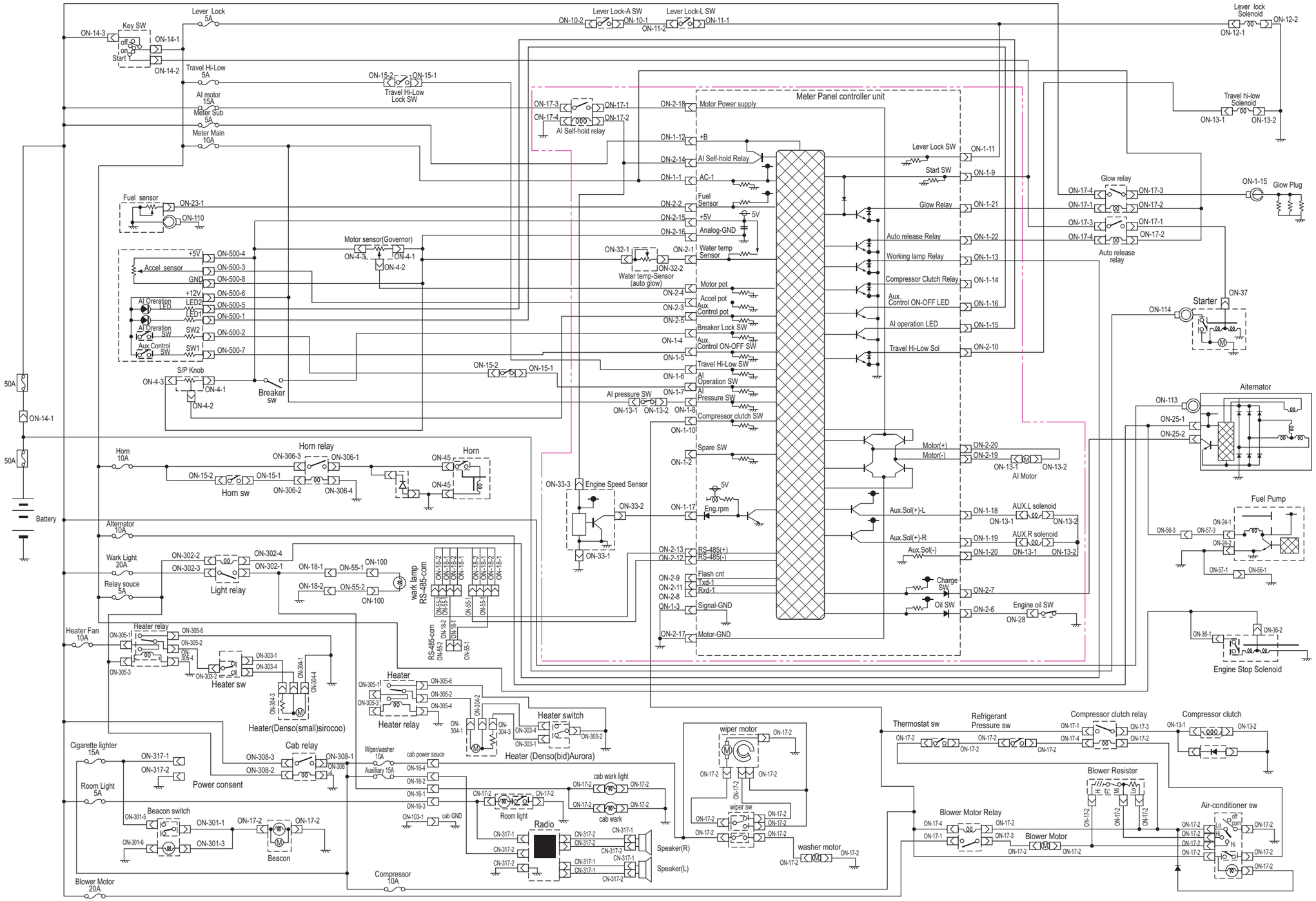

2. KX91-3S, U35S, U35-3S : PP - version

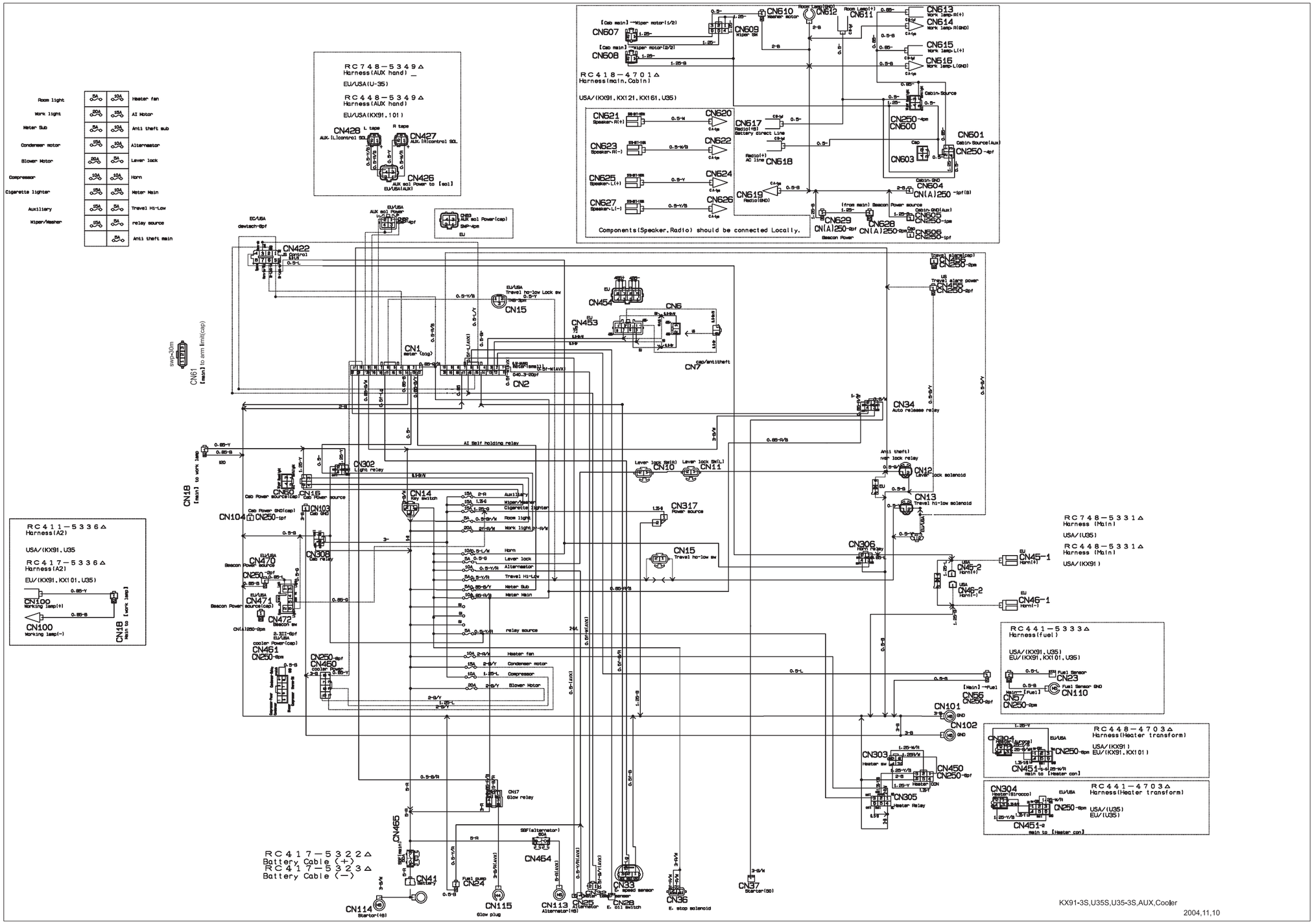

3. KX91-3α, 101-3α, U35-3α : EU - version

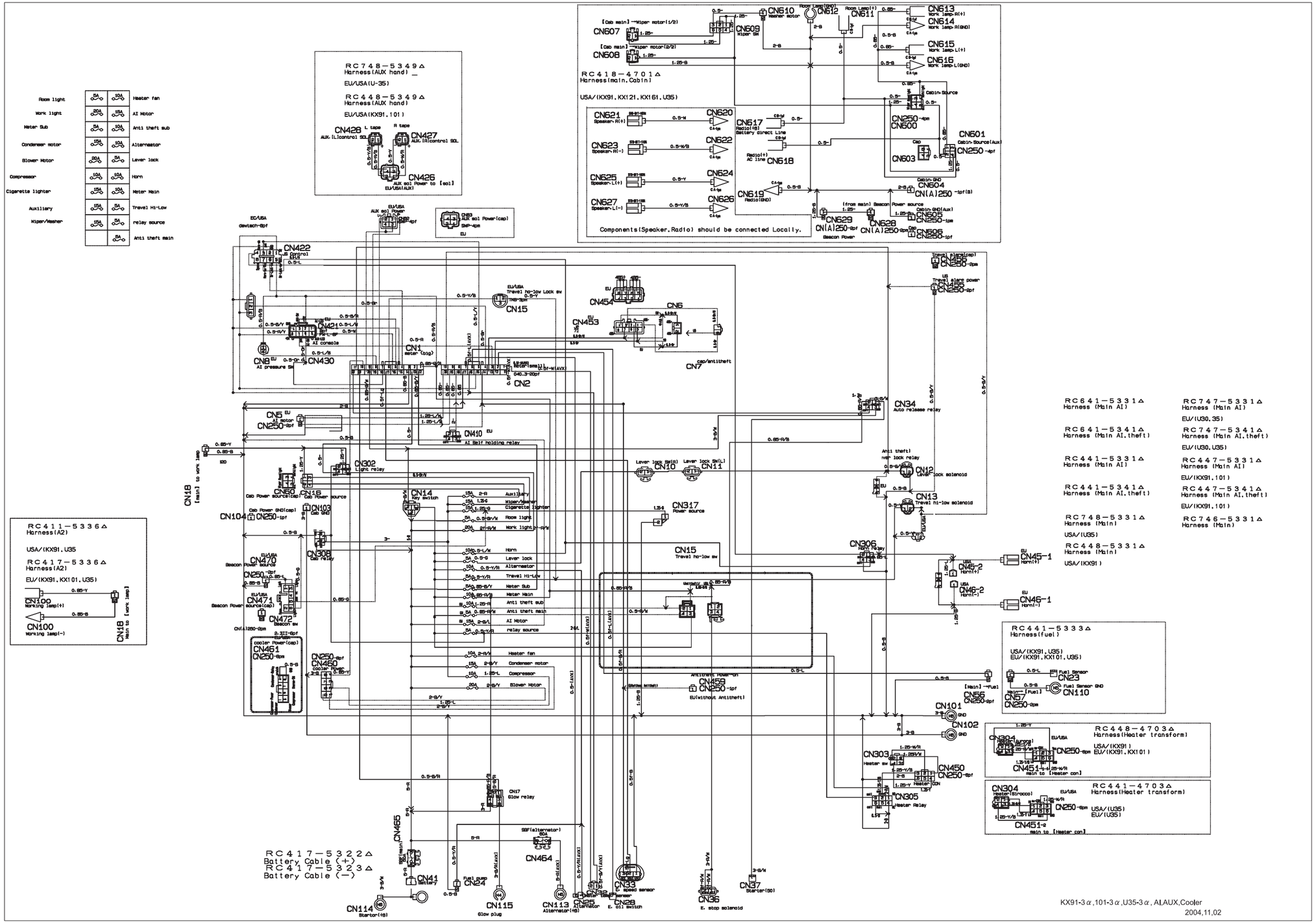

4. KX121-3S·α, 161-3S·α, U45-3S·α : EU and PP - version

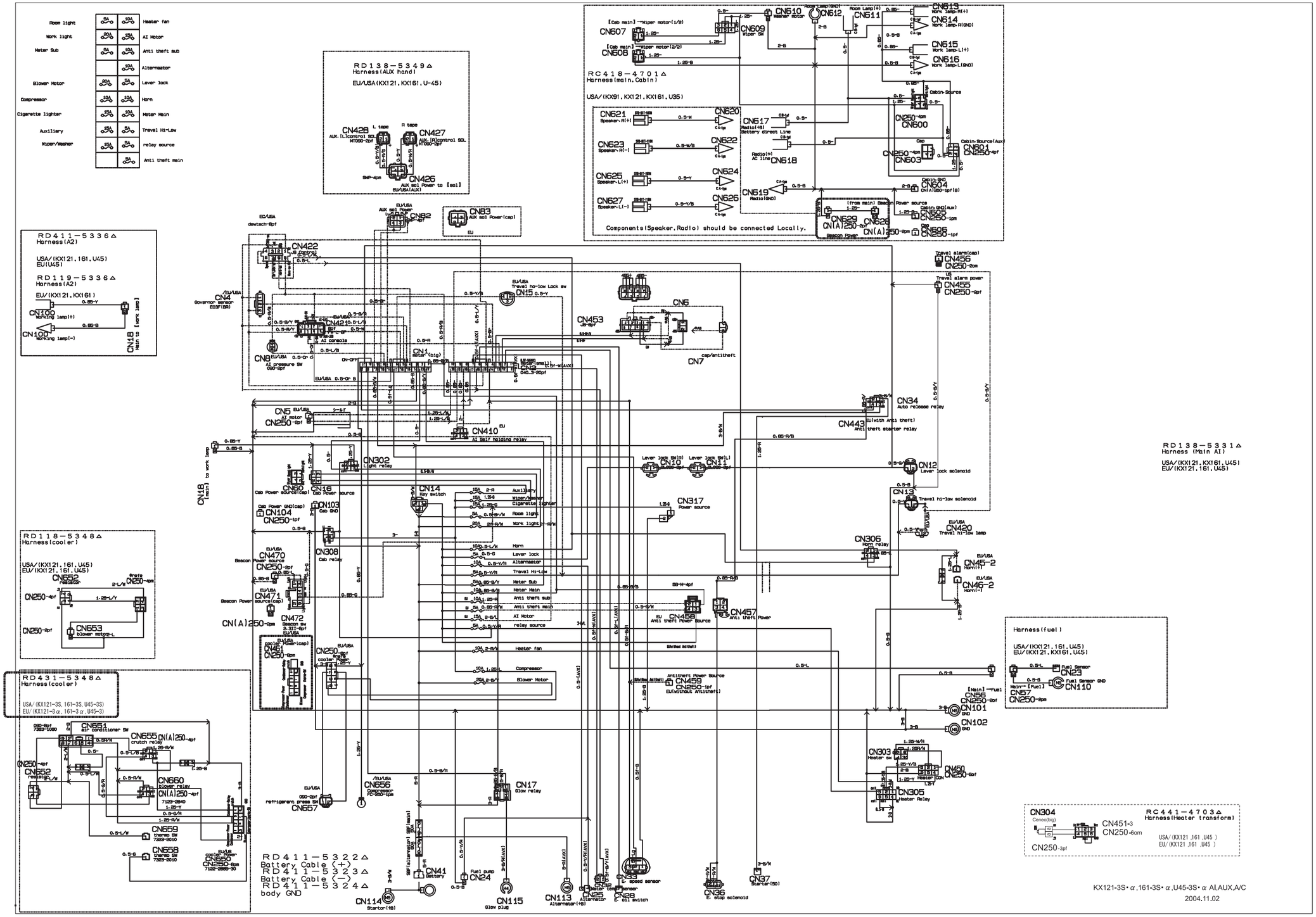

https://truckmanualshub.com/

https://truckmanualshub.com/

https://truckmanualshub.com/

KUBOTA Corporation
CONSTRUCTION MACHINERY DIVISION
1-1-1 NAKAMIYA-OHIKE, HIRAKATA-CITY, OSAKA, JAPAN
EDITOR:
CONSTRUCTION MACHINERY MANUFACTURING DEPT.
SERVICE ENGINEERING SECTION
HIRAKATA PLANT
1-1-1 NAKAMIYA-OHIKE, HIRAKATA-CITY, OSAKA, JAPAN
PHONE :+81-72-840-1195
FAX :+81-72-840-2886

KUBOTA Corporation Printed in Japan 0410.CMC.e.12 Code No.97899-61260