https://truckmanualshub.com/

Doosan Infracore

65.99897-8076C

Operation & Maintenance Manual

GENERATOR DIESEL ENGINE

P158LE / -1 / - 2 / -S / -III
P180LE / -1 / -S / -II
P222LE / -1 / -S / -II

POWER UNIT DIESEL ENGINE

PU158TI
PU180TI
PU222TI

https://truckmanualshub.com/

FOREWORD

This manual is designed to serve as an instruction for Diesel generator engine and Power Unit engine of DOOSAN series (P158LE /P180LE /P222LE, PU158TI/ PU180TI/ PU222TI).

The engines are 4 strokes, 2 valves per cylinder, V-type, and direct injection mode and thus, are also satisfying with various features required as generator and power unit engine such as quiet operation, economical fuel consumption, durability in high speed operation and so forth.

We are very confident that these engine series are quite superior to any high speed engines in economy and efficiency. However, high performance and long life cycle will be accomplished when a proper handling and administration of periodic inspections and maintenance should be observed. Readers are desired to know for your reference that those kinds of maintenance matters are explained here in detail by means of figures and diagrams.

In this manual, the following symbols are used to indicate the type of service operations to be performed.

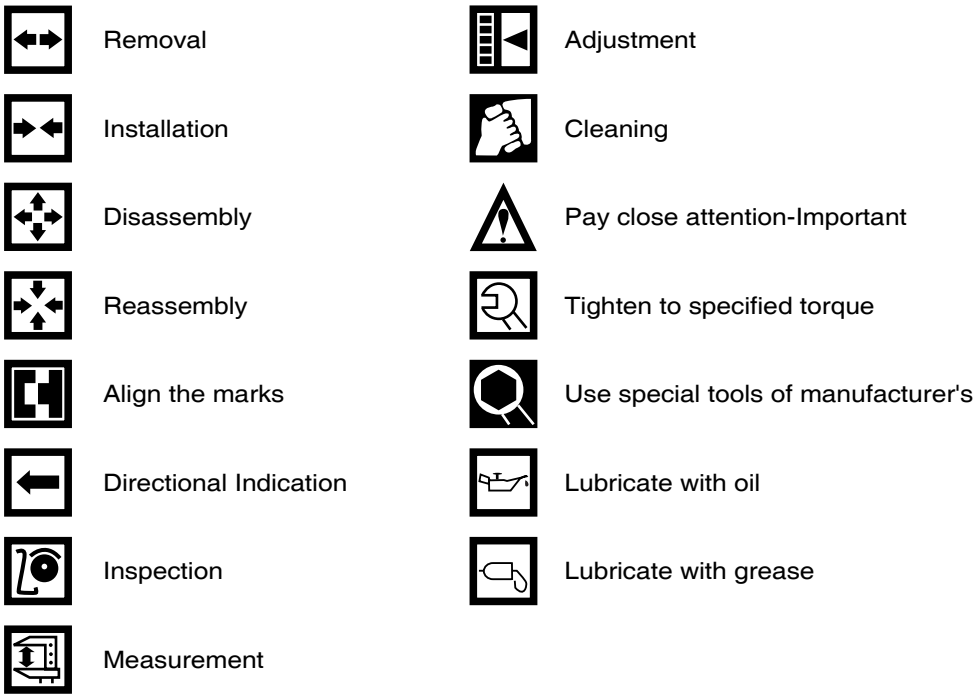

If you have any question or recommendation in connection with this manual, please do not hesitate to contact our head office, dealers or authorized service shops near by your location for any services.

For the last, the contents of this instruction manual may be changed without prior notice for some quality improvement. Thank you.

Doosan Infracore Co., Ltd.

Jan. 2008

https://truckmanualshub.com/

CONTENTS

1. Safety Regulations & Engine Specifications

1.1. Safety regulations 1
1.2. Engine Specification 5
1.3. Engine Assembly 11

2. Technical Information

2.1. Engine Model and Serial Number 19
2.2. Engines Characteristic 20
2.3. Troubleshooting 41
2.4. Operation tip 51

3. Disassembly and Reassembly of Major Components

3.1. Engine Disassembly 52
3.2. Inspection 62
3.3. Engine Reassembly 81
3.4. Breaking-In 98

4. Commissioning and Operation

4.1. Preparations 99
4.2. Starting 99
4.3. Running in 100
4.4. During operation 100
4.5. Shutting down 100
4.6. Maintenance and Care 101

5. Maintenance of Major Components

5.1. Fuel Injection System 105
5.2. Cooling System 126
5.3. Lubricating System 129
5.4. Turbo Charger 131
5.5. Installation 140
5.6. Air Cleaner 143
5.7. Tightening Cylinder Head Bolts 145
5.8. V-belts 146

6. Special Tool List 149

- **Appendix**
- **Parts & After Service Center**
- **Worldwide Network**

https://truckmanualshub.com/

1. Safety Regulations & Engine Specifications

1.1. Safety Regulations

1.1.1. General notes

Handling diesel engines and the necessary resources is no problem when the personnel commissioned with operation and maintenance are trained accordingly and use their common sense.

This summary is a compilation of the most important regulations, These are broken down into main sections which contain the information necessary for preventing injury to persons, damage to property and pollution. In addition to these regulations those dictated by the type of engine and its site are to be observed also.

IMPORTANT :

If despite all precautions, an accident occurs, in particular through contact with caustic acids, fuel penetrating the skin, scalding from oil, antifreeze being splashed in the eyes etc, consult a doctor immediately.

1.1.2. Regulations designed to prevent accidents

1) During commissioning, starting and operation

- Before putting the engine into operation for the first time, read the operating instructions carefully and familiarize yourself with the “critical” points, If you are unsure, ask your DHI representative.
- For reasons of safety we recommend you attach a notice to the door of the engine room prohibiting the access of unauthorized persons and that you draw the attention of the operating personal to the fact that they are responsible for the safety of persons who enter the engine room.
- The engine must be started and operated only by authorized personnel. Ensure that the engine cannot be started by unauthorized persons.
- When the engine is running, do not get too close to the rotating parts. Wear close-fitting clothing.
- Do not touch the engine with bare hands when it is warm from operation risk of bums.
- Exhaust gases are toxic. Comply with the instructions for the installation of DHI Diesel engines which are to be operated in enclosed spaces. Ensure that there is adequate ventilation and air extraction.
- Keep vicinity of engine, ladders and stairways free of oil and grease. Accidents caused by slipping can have serious consequences.

https://truckmanualshub.com/

2) During maintenance and care

- Always carry out maintenance work when the engine is switched off. If the engine has to be maintained while it Is running, e.g. changing the elements of change-over filters, remember that there is a risk of scalding. Do not get too close to rotating parts.
- Change the oil when the engine is warm from operation.

CAUTION :
There is a rise of burns and scalding. Do not touch oil drain plug or oil filters with bare hands.

- Take into account the amount of oil in the sump. Use a vessel of sufficient size to ensure that the oil will not overflow.
- Open the coolant circuit only when the engine has cooled down. If opening while the engine is still warm is unavoidable, comply with the instructions in the chapter “Maintenance and Care”.
- Neither tighten up nor open pipes and hoses (lube oil circuit, coolant circuit and any additional hydraulic oil circuit) during the operation. The fluids which flow out can cause injury.
- Fuel is inflammable. Do not smoke or use naked lights in its vicinity. The tank must be filled only when the engine is switched off.
- When using compressed air, e.g. for cleaning the radiator, wear goggles.
- Keep service products (anti-freeze) only in containers which can not be confused with drinks containers.
- Comply with the manufacturer’s instructions when handling batteries.

CAUTION :
Accumulator acid is toxic and caustic. Battery gases are explosive.

3) When carrying out checking, setting and repair work

- Checking, setting and repair work must be carried out by authorized personnel only.
- Use only tools which are in satisfactory condition. Worn open-end wrench slip. which could lead to Injury.
- When the engine is hanging on a crane, no-one must be allowed to stand or pass under it. Keep lifting gear in good condition.
- When working on parts which contain asbestos, comply with the notes at the end of this chapter.
- When checking injectors do not put your hands under the jet of fuel. Do not inhale atomized fuel.
- When working on the electrical system disconnect the battery earth cable first. Connect it up again last in prevent short circuits.

1.1.3. Regulations designed to prevent damage to engine and premature wear

1) Never demand more of the engine than it was designed to yield for its intended purpose.
   - Detailed information on this can be found in the sales literature. The injection pump must not be adjusted without prior written permission of DHI.
2) If faults occur, find the cause immediately and have it eliminated in order to prevent more serious of damage.
3) Use only genuine DHI spare parts. DHI will accept no responsibility for damage resulting from the installation of other parts which are supposedly “just as good”.
4) In addition to the above, note the following points.
   - Never let the engine run when dry, i.e. without lube oil or coolant.
   - Use only DHI-approved service products (engine oil , anti-freeze and anticorrosion agent).
   - Pay attention to cleanliness. The Diesel fuel must be free of water. See “Maintenance and care”.
   - Have the engine maintained at the specified intervals.
   - Do not switch off the engine immediately when it is warm, but let it run without load for about 5 minutes so that temperature equalization can take place.
   - Never put cold coolant into an overheated engine. See “Maintenance and care”.
   - Do not add so much engine oil that the oil level rises above the max. marking on the dipstick. Do not exceed the maximum permissible tilt of the engine. Serious damage to the engine may result if these instructions are not adhered to.
   - Always ensure that the testing and monitoring equipment (for battery charge, oil pressure, coolant temperature) function satisfactorily.
   - Comply with instructions for operation of the alternator. See “Commissioning and operation”.
   - Do not let the raw water pump run dry, If there is a risk of frost, drain the pump when the engine is switched off.

1.1.4. Regulations designed to prevent pollution

1) Engine oil, filter elements, fuel filters

- Take old oil only to an oil collection point.
- Take strict precautions to ensure that oil does not get into the drains or into the ground. The drinking water supply could be contaminated.
- Filter elements are classed as dangerous waste and must be treated as such.

2) Coolant

- Treat undiluted anti-corrosion agent and / or antifreeze as dangerous waste.
- When disposing of spent coolant comply with the regulations of the relevant local authorities.

1.1.5. Notes on safety in handling used engine oil

Prolonged or repeated contact between the skin and any kind of engine oil decreases the skin.

Drying, irritation or inflammation of the skin may therefore occur. Used engine oil also contains dangerous substances which have caused skin cancer in animal experiments. If the basic rules of hygiene and health and safety at work are observed, health risks are not to the expected as a result of handling used engine oil.

https://truckmanualshub.com/

Health precautions :

- Avoid prolonged or repeated skin contact with used engine oil.
- Protect your skin by means of suitable agents (creams etc.) or wear protective gloves.
- Clean skin which has been in contact with engine oil.
  - Wash thoroughly with soap and water, A nailbrush is an effective aid.
  - Certain products make it easier to clean your hands.
  - Do not use petrol, Diesel fuel, gas oil, thinners or solvents as washing agents.
- After washing apply a fatty skin cream to the skin.
- Change oil-soaked clothing and shoes.
- Do not put oily rags into your pockets.

Ensure that used engine oil is disposed of properly.
- Engine oil can endanger the water supply -

For this reason do not let engine oil get into the ground, waterways, the drains or the sewers. Violations are punishable.
Collect and dispose of used engine oil carefully. For information on collection points please contact the seller, the supplier or the local authorities.

1.1.6. General repair instructions

1. Before performing service operation, disconnect the grounding cable from the battery for reducing the chance of cable damage and burning due to short-circuiting.
2. Use covers for preventing the components from damage or pollution.
3. Engine oil and anti-freeze solution must be handled with reasonable care as they cause paint damage.
4. The use of proper tools and special tools where specified is important to efficient and reliable service operation.
5. Use genuine DOOSAN parts necessarily.
6. Used cotter pins, gaskets, O-rings, oil seals, lock washer and self-lock nuts should be discarded and new ones should be prepared for installation as normal function of the parts can not be maintained if these parts are reused.
7. To facilitate proper and smooth reassemble operation, keep disassembled parts neatly in groups. Keeping fixing bolts and nut separate is very important as they vary in hardness and design depending on position of installation.
8. Clean the parts before inspection or reassembly. Also clean oil ports, etc. using compressed air to make certain they are free from restrictions.
9. Lubricate rotating and sliding faces of parts with oil or grease before installation.
10. When necessary, use a sealer on gaskets to prevent leakage.
11. Carefully observe all specifications for bolts and nuts torques.
12. When service operation is completed, make a final check to be sure service has been done property.

1.2. Engine Specification

1.2.1. Specification for generator engine

Items \ Engine Model		P158LE series	P180LE series	P222LE series
Engine type		Water-cooled, 4 cycle Vee type Turbo charged & intercooled		
Combustion chamber type		Direct injection type		
Cylinder liner type		Wet type, chromated or casting liner		
Timing gear system		Gear driven type		
No. of piston ring		Compression ring 2, oil ring 1		
No. of cylinder-bore × stroke	(mm)	8 – 128 × 142	10 – 128 × 142	12 – 128 × 142
Total piston displacement	(cc)	14,618	18,273	21,927
Compression ratio		P158LE/-1/-2, P180LE/-1, P222LE/-1 => 15.0 : 1 P158LE-S/-III, P180LE-S/-II, P222LE-S/-II => 14.6 : 1 P222LE-II(EAYQD) => 14.0 : 1		
Engine dimension (length × width × height)	(mm)	1,484×1,389×1,161.5	1,557×1,389×1,248	1,717×1,389×1,288
Engine dry weight	(kg)	P158LE/-1/-2 : 950 P158LE-S/-III : 961	P180LE/-1 : 1,175 P180LE-S/-II : 1,188	P222LE/-1 : 1,575 P222LE-S/-II : 1,591
Fuel injection order		1-5-7-2-6-3-4-8	1-6-5-10-2-7-3-8-4-9	1-12-5-8-3-10-6-7-2-11-4-9
Injection pump type		Bosch in-line P type		
Governor type		Electrical type		
Injection nozzle type		Multi-hole type		
Fuel injection pressure	(kg/cm^2)	285		
Compression pressure	(kg/cm^2)	28 (at 200 rpm)		
Intake and exhaust valve clearance (at cold)	(mm)	0.3 / 0.4		
Intake valve	Open at	24° (B.T.D.C)		
	Close at	36° (A.B.D.C)		
Exhaust valve	Open at	63° (B.B.D.C)		
	Close at	27° (A.T.D.C)		
Lubrication method		Fully forced pressure feed type		
Oil pump type		Gear type		
Oil filter type		Full-flow, cartridge type		
Lubricating oil capacity (max./min.)	(lit)	21 / 17	35 / 28	40 / 33
Oil cooler type		Water cooled		
Water pump		Centrifugal type driven by belt		
Cooling Method		Pressurized circulation		
Cooling water capacity (engine only)	(lit)	20	21	23
Thermostat type		Wax pallet type (71 ~ 85 °C)		
Alternator voltage – capacity	(V – A)	24 – 45		
Starting Motor voltage – output	(V – kW)	24 – 7.0		
Battery capacity	(V – AH)	24 – 200		

1.2.2. Specification for power unit engine

Items \ Engine Model		PU158TI	PU180TI	PU222TI
Engine type		Water-cooled, 4 cycle Vee type Turbo charged & intercooled		
Combustion chamber type		Direct injection type		
Cylinder liner type		Wet type, chromated or casting liner		
Timing gear system		Gear driven type		
No. of piston ring		Compression ring 2, oil ring 1		
No. of cylinder-bore × stroke	(mm)	8 – 128 × 142	10 – 128 × 142	12 – 128 × 142
Total piston displacement	(cc)	14,618	18,273	21,927
Compression ratio		15 : 1		
Engine dimension (length × width × height)	(mm)	1,484×1,389×1,161.5	1,557×1,389×1,248	1,717×1,389×1,288
Engine dry weight	(kg)	950	1,175	1,575
Fuel injection order		1-5-7-2-6-3-4-8	1-6-5-10-2-7-3-8-4-9	1-12-5-8-3-10-6-7-2-11-4-9
Injection pump type		Bosch in-line P type		
Governor type		Mechanical type		
Injection nozzle type		Multi-hole type		
Fuel injection pressure	(kg/cm^2)	285		
Compression pressure	(kg/cm^2)	28 (at 200 rpm)		
Intake and exhaust valve clearance (at cold)	(mm)	0.3 / 0.4		
Intake valve	Open at	24° (B.T.D.C)		
	Close at	36° (A.B.D.C)		
Exhaust valve	Open at	63° (B.B.D.C)		
	Close at	27° (A.T.D.C)		
Lubrication method		Pressurized circulation		
Oil pump type		Gear type		
Oil filter type		Full-flow, cartridge type		
Lubricating oil capacity (max./min.)	(lit)	21 / 17	35 / 28	40 / 33
Oil cooler type		Water cooled		
Water pump		Centrifugal type driven by belt		
Cooling Method		Pressurized circulation		
Cooling water capacity (engine only)	(lit)	20	21	23
Thermostat type		Wax pallet type (71 ~ 85 °C)		
Alternator voltage – capacity	(V – A)	24 – 45		
Starting Motor voltage – output	(V – kW)	24 – 7.0		
Battery capacity	(V – AH)	24 – 200		

https://truckmanualshub.com/

1.2.3. Engine power for generator

Production tolerance : ±5%

Engine model		Condition			
		HZ	Timing (BTDC)	Prime	Stand by
P158LE	P158LE-2 (EAZOC/QC)	50 HZ(1,500 rpm)	16	399 PS(293 kW)	437 PS(321 kW)
		60 HZ(1,800 rpm)	16	470 PS(346 kW)	510 PS(375 kW)
	P158LE-1 (EAZOB/QB)	50 HZ(1,500 rpm)	16	444 PS(327 kW)	492 PS(362 kW)
		60 HZ(1,800 rpm)	16	498 PS(366 kW)	546 PS(402 kW)
	P158LE (EAZOA/QA)	50 HZ(1,500 rpm)	16	494 PS(363 kW)	563 PS(414 kW)
		60 HZ(1,800 rpm)	16	547 PS(402 kW)	623 PS(458 kW)
	P158LE-S (EAZOG/H/QG)	50 HZ(1,500 rpm)	12	546 PS(402 kW)	600 PS(441 kW)
		60 HZ(1,800 rpm)	16	600 PS(441 kW)	654 PS(481 kW)
	P158LE-III (EAZOF)	60 HZ(1,800 rpm)	16	–	690 PS(508 kW)
P180LE	P180LE-1 (EASOB/QB)	50 HZ(1,500 rpm)	16	548 PS(403 kW)	601 PS(442 kW)
		60 HZ(1,800 rpm)	16	617 PS(454 kW)	677 PS(498 kW)
	P180LE (EASOA/QA)	50 HZ(1,500 rpm)	16	602 PS(443 kW)	674 PS(496 kW)
		60 HZ(1,800 rpm)	16	676 PS(497 kW)	734 PS(540 kW)
	P180LE (EASOC)	60 HZ(1,800 rpm)	18	695 PS(511 kW)	764 PS(562 kW)
	P180LE-S (EASOE/F/QE)	50 HZ(1,500 rpm)	16	615 PS(452 kW)	674 PS(496 kW)
		60 HZ(1,800 rpm)	16	705 PS(519 kW)	771 PS(567 kW)
	P180LE-II (EASOD)	60 HZ(1,800 rpm)	16	–	827 PS(608 kW)
P222LE	P222LE-1 (EAYOB/QB)	50 HZ(1,500 rpm)	16	696 PS(512 kW)	752 PS(553 kW)
		60 HZ(1,800 rpm)	16	765 PS(563 kW)	850 PS(625 kW)
	P222LE (EAYOA/QA)	50 HZ(1,500 rpm)	16	723 PS(532 kW)	781 PS(574 kW)
		60 HZ(1,800 rpm)	16	803 PS(591 kW)	883 PS(649 kW)
	P222LE (EAYOC)	60 HZ(1,800 rpm)	18	803 PS(591 kW)	898 PS(660 kW)
	P222LE-S (EAYOE/F/QE)	50 HZ(1,500 rpm)	20	750 PS(552 kW)	820 PS(603 kW)
		60 HZ(1,800 rpm)	19	850 PS(625 kW)	927 PS(682 kW)
	P222LE-II (EAYOD/QD)	50 HZ(1,500 rpm)	13	–	886 PS(652 kW)
		60 HZ(1,800 rpm)	19	–	1000 PS(736 kW)

* Note : All data are based on operation without cooling fan at ISO 3046

https://truckmanualshub.com/

1.2.4. Engine performance curve

1) PU158TI engine

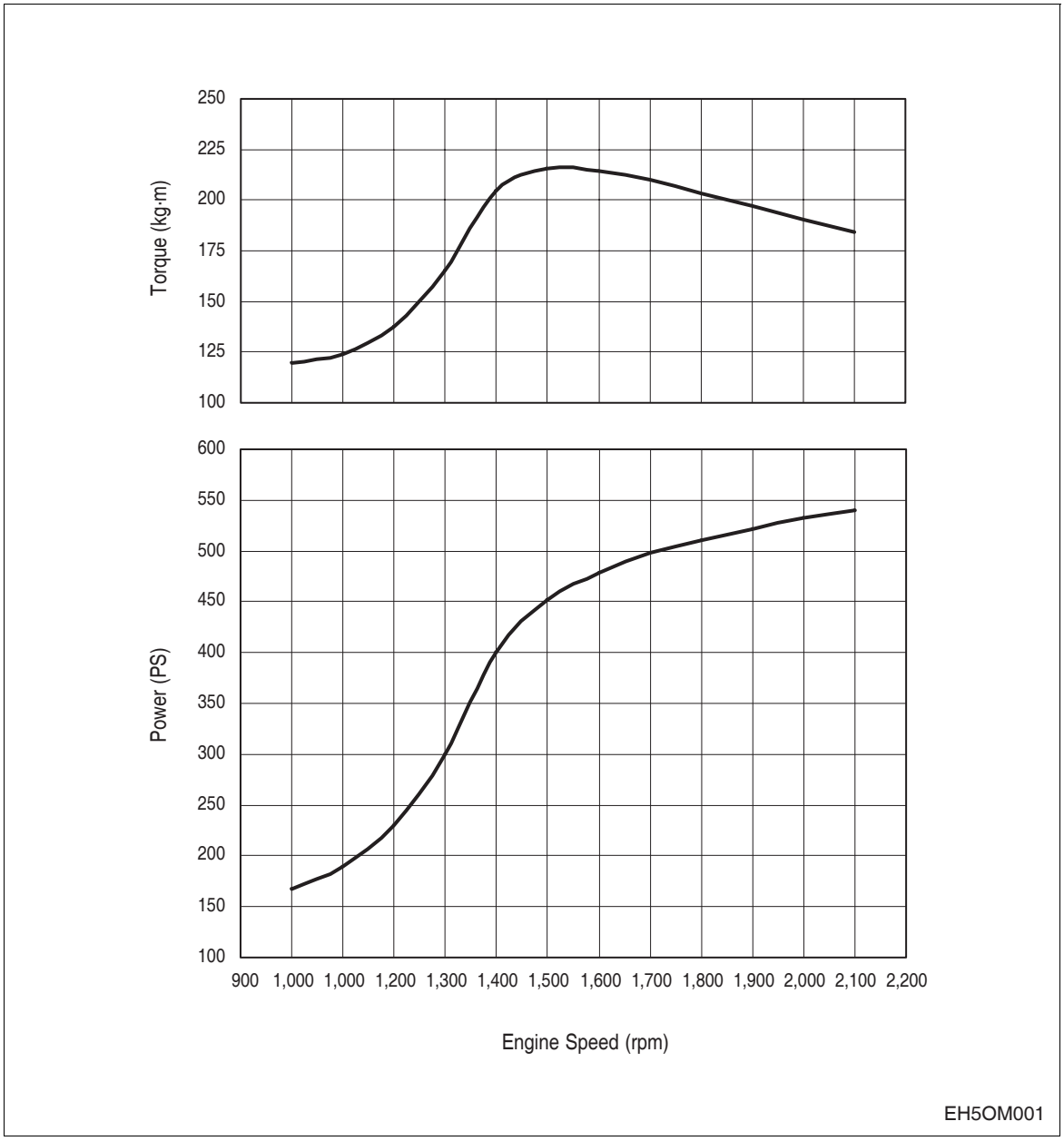

Performance		ISO 3046, DIN 6270B
Output	(max.)	397 kW (540 PS) / 2,100 rpm
Torque	(max)	2,117 N·m (216 kg·m) / 1,500 rpm

https://truckmanualshub.com/

2) PU180TI engine

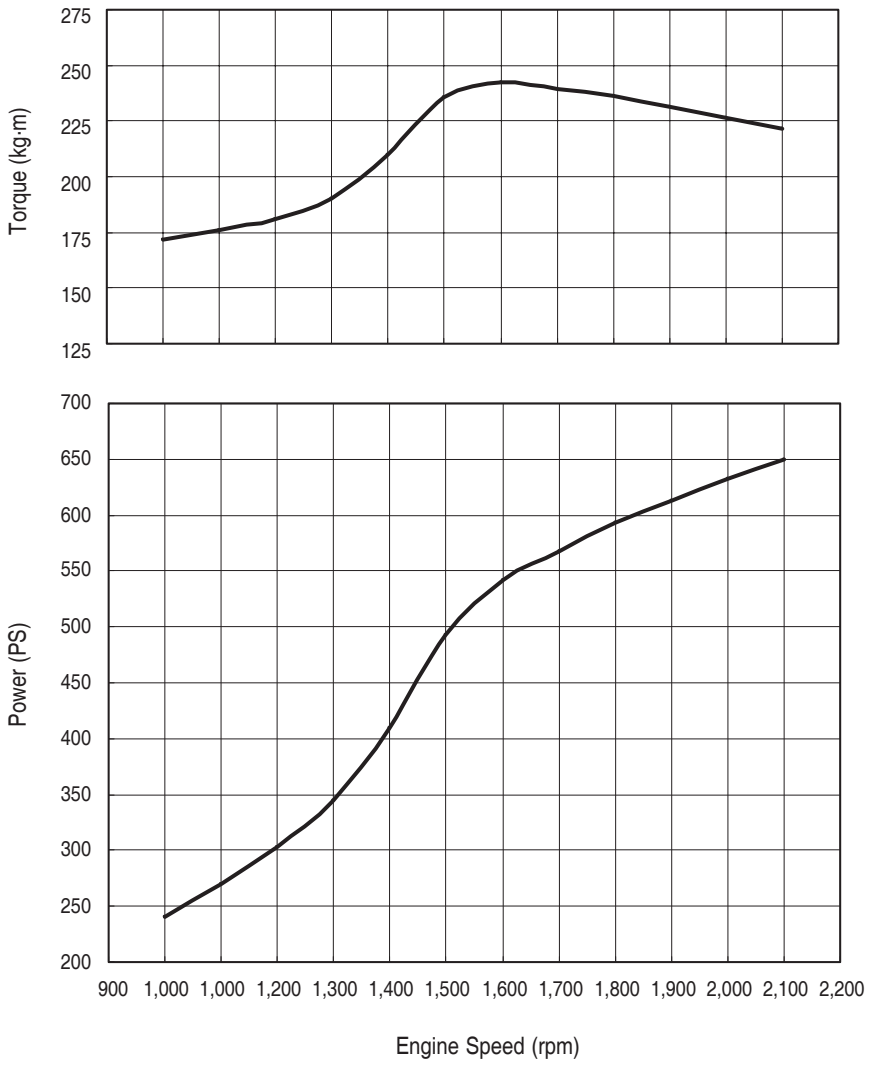

Performance		ISO 3046, DIN 6270B
Output	(max.)	478 kW (650 PS) / 2,100 rpm
Torque	(max)	2,303 N·m (235 kg·m) / 1,500 rpm

https://truckmanualshub.com/

3) PU222TI engine

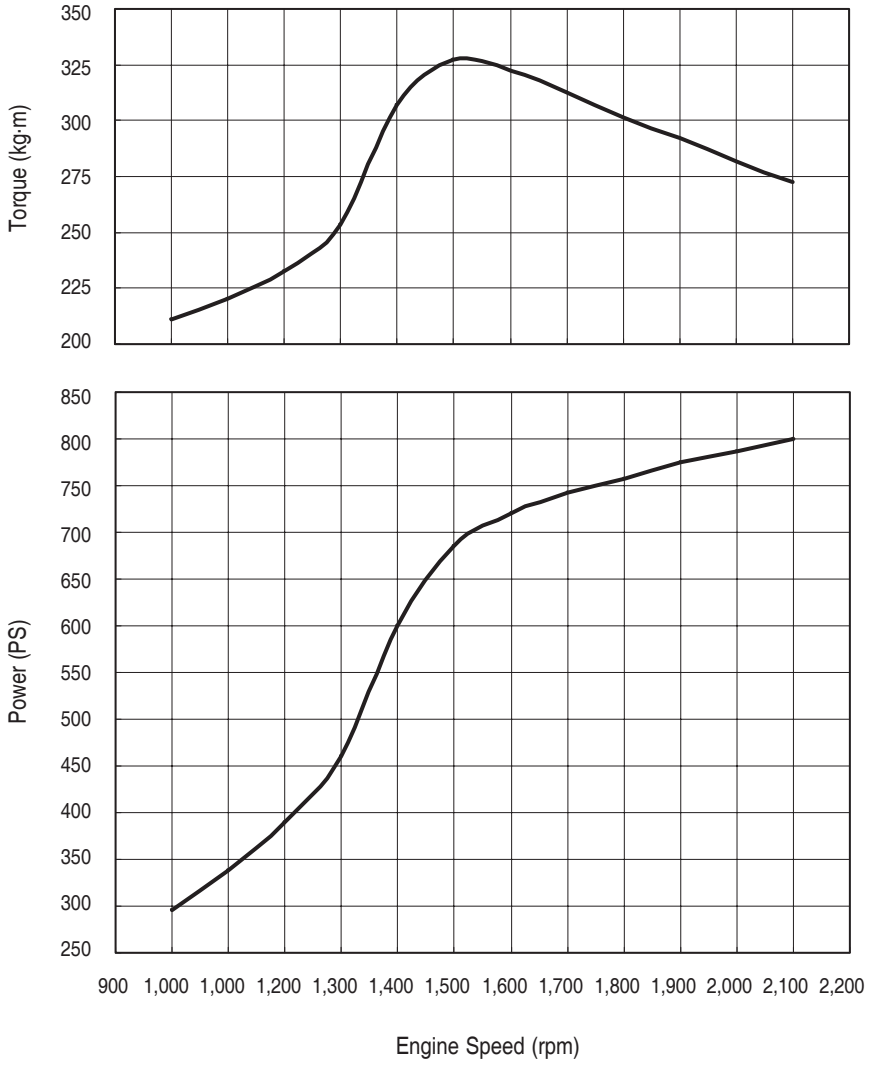

EH5OM003

Performance		ISO 3046, DIN 6270B
Output	(max.)	588 kW (800 PS) / 2,100 rpm
Torque	(max)	3,205 N·m (327 kg·m) / 1,500 rpm

https://truckmanualshub.com/

1.3. Engine Assembly

1.3.1. Engine sectional view (Longitudinal)

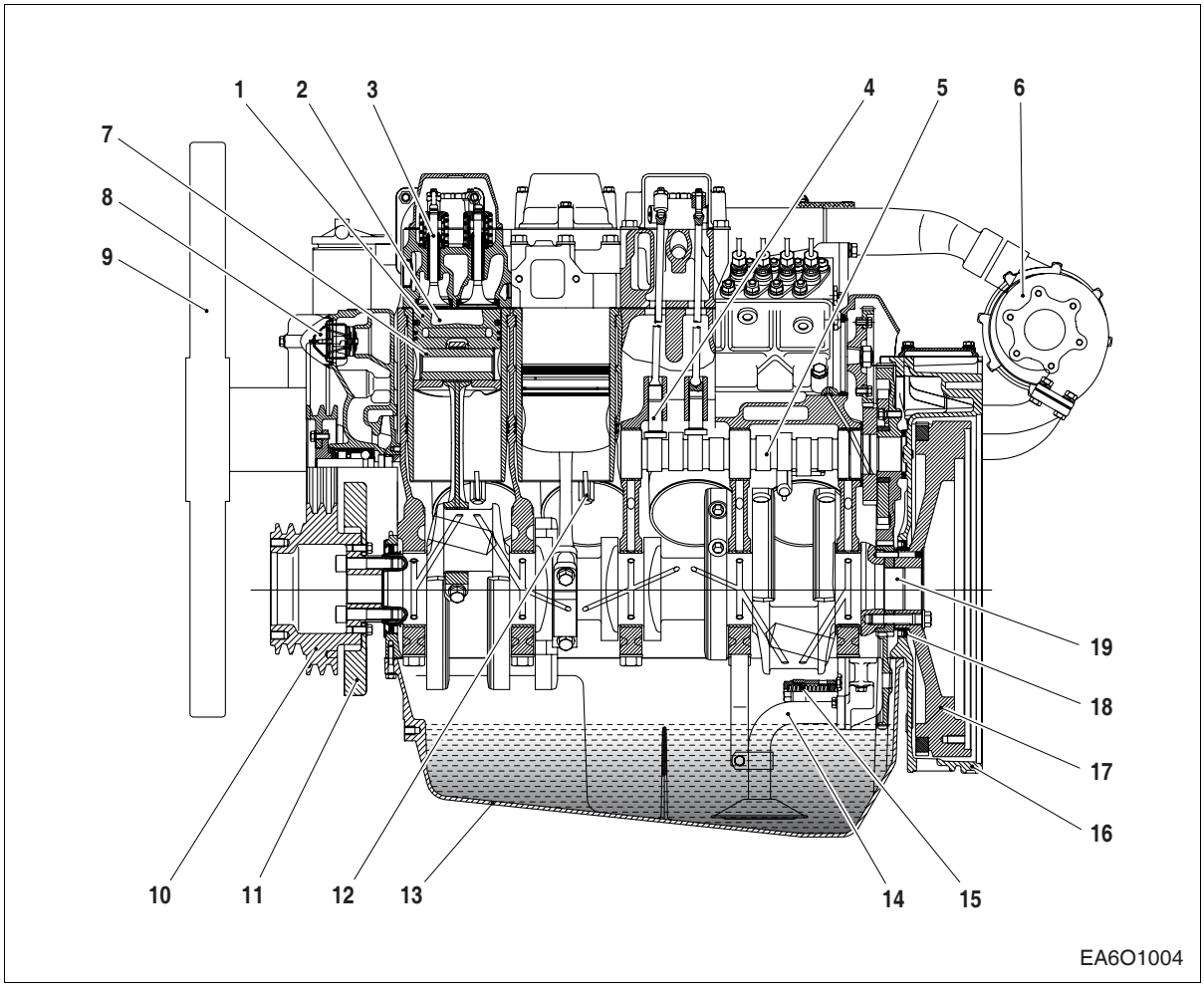

1. Piston
2. Combustion camper
3. Valve
4. Tappet
5. Cam shaft
6. Turbocharger
7. Piston pin
8. Thermostat
9. Cooling fan
10. Crank shaft pulley
11. Vibration damper
12. Oil spray nozzle
13. Oil pan
14. Oil suction pipe
15. Oil pump relief valve
16. Flywheel housing
17. Flywheel
18. Oil seal
19. Crank shaft

https://truckmanualshub.com/

1.3.2. Engine sectional view (Cross)

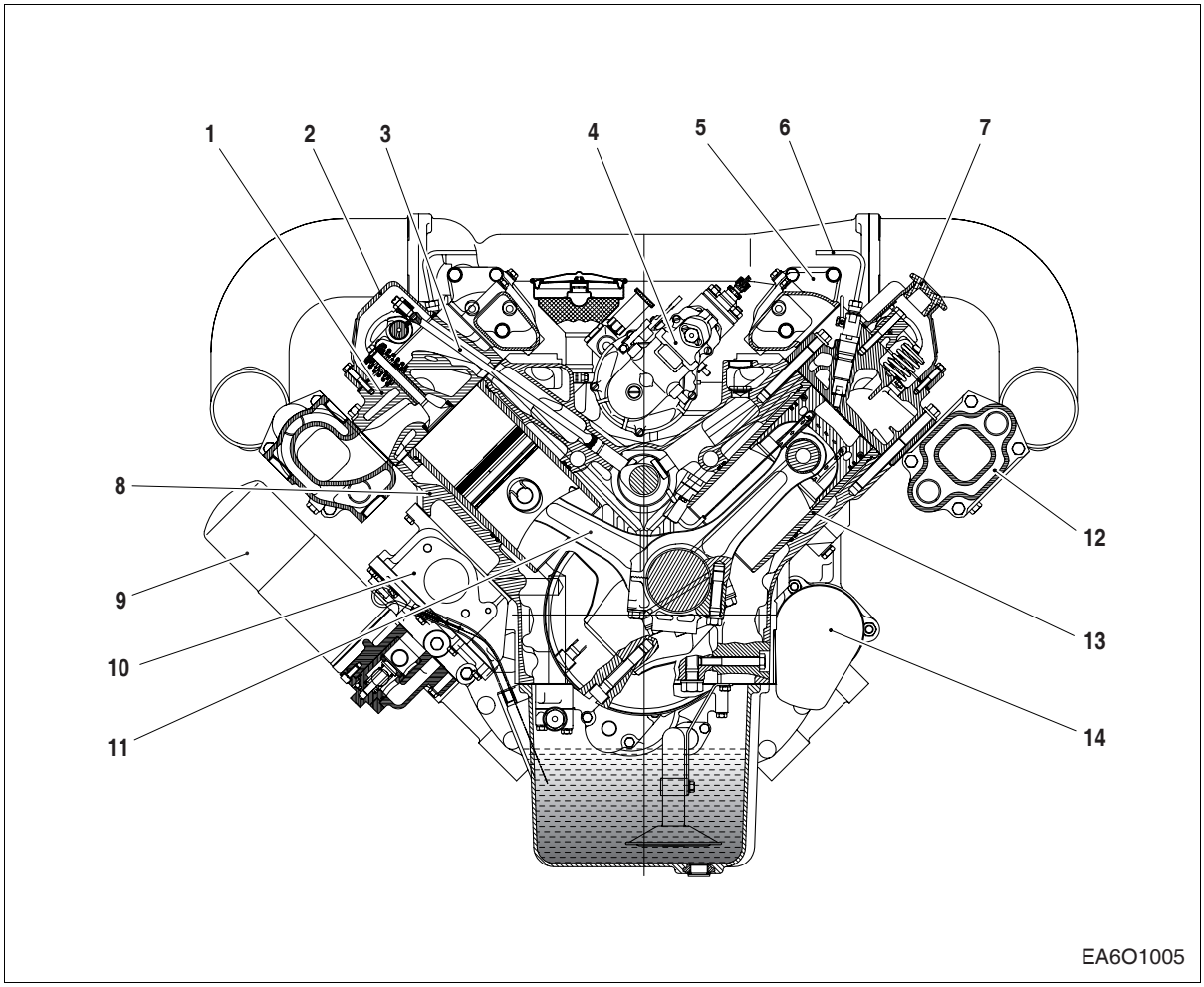

1. Cylinder head
2. Cylinder head cover
3. Push rod
4. Injection pump
5. Intake manifold
6. Injection pipe
7. Oil filler cap
8. Cylinder block
9. Oil filter
10. Oil cooler
11. Connecting rod
12. Exhaust manifold
13. Cylinder liner
14. Starter

https://truckmanualshub.com/

1.3.3. Engine assembly views

1) PU158TI : Power unit engine

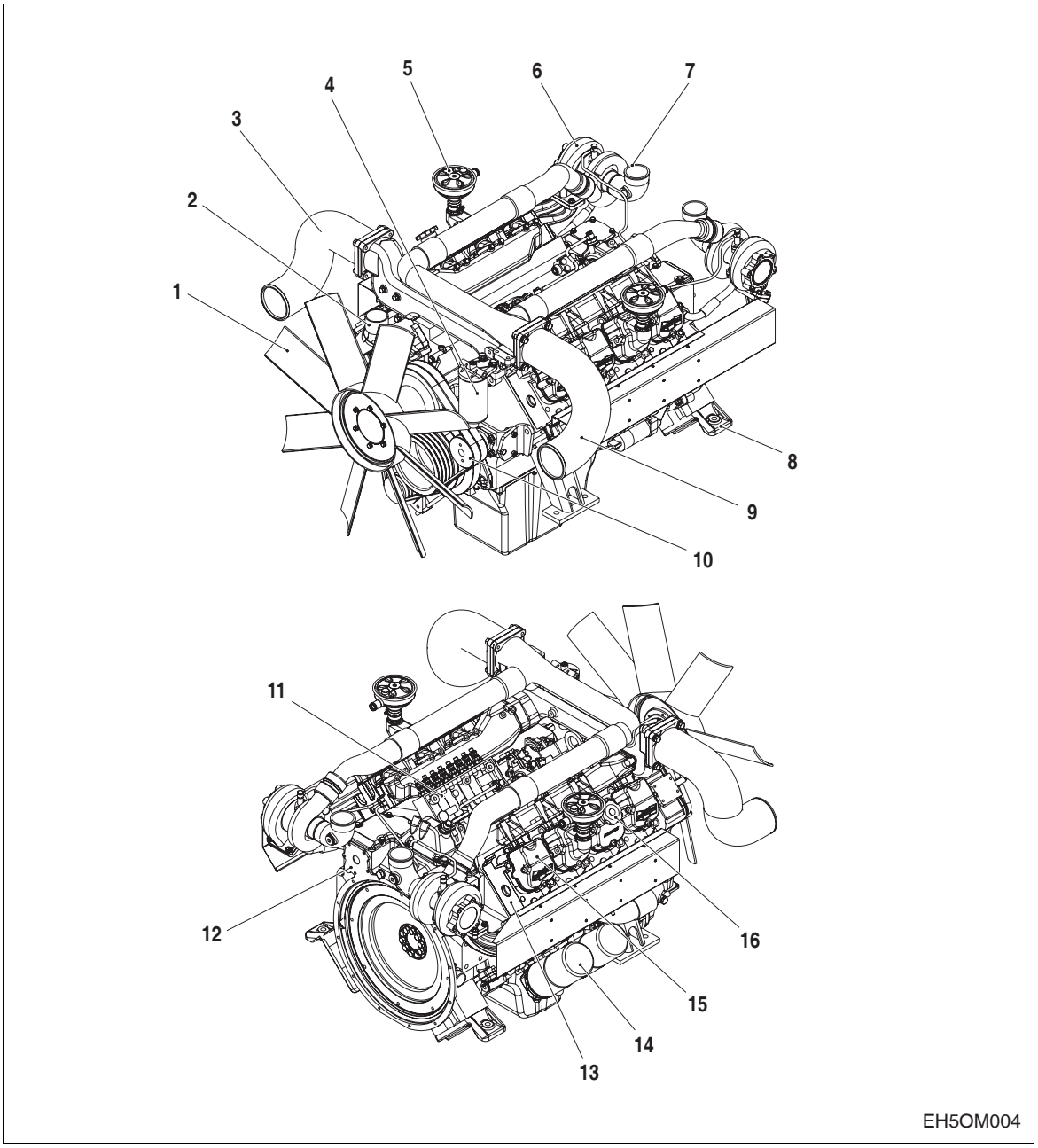

1. Cooling fan
2. Water outlet
3. Air pipe
   (Intercooler to intake manifold)
4. Fuel filter
5. Breather
6. Turbo charger
7. Air pipe
   (Air cleaner to turbocharger)
8. Mounting bracket
9. Air pipe
   (Turbocharger to inter cooler)
10. Idle pulley
11. Injection pump
12. Fly wheel housing
13. Cylinder head
14. Oil filter
15. Cylinder head cover
16. Oil filler cap

https://truckmanualshub.com/

2) PU180TI : Power unit engine

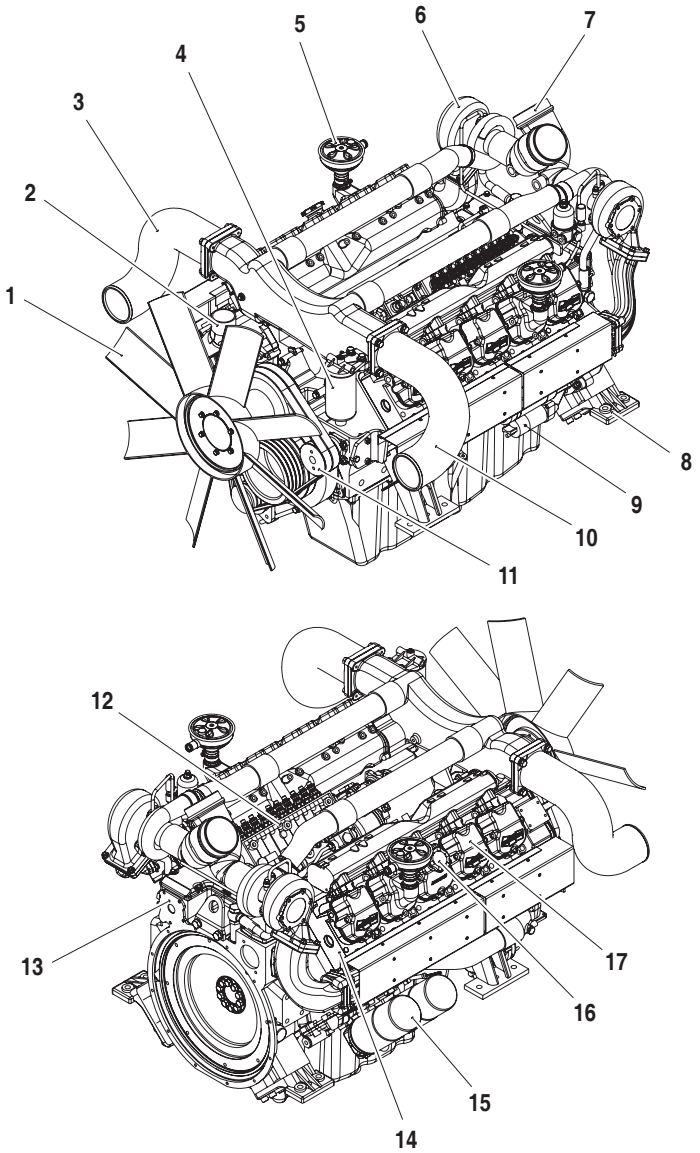

EH5OM005

1. Cooling fan
2. Water outlet
3. Air pipe
   (Intercooler to intake manifold)
4. Fuel filter
5. Breather
6. Turbo charger
7. Air pipe
   (Air cleaner to turbocharger)
8. Mounting bracket
9. Air pipe
   (Turbocharger to inter cooler)
10. Starter
11. Idle pulley
12. Injection pump
13. Fly wheel housing
14. Cylinder head
15. Oil filter
16. Oil filler cap
17. Cylinder head cover

https://truckmanualshub.com/

3) PU222TI : Power unit engine

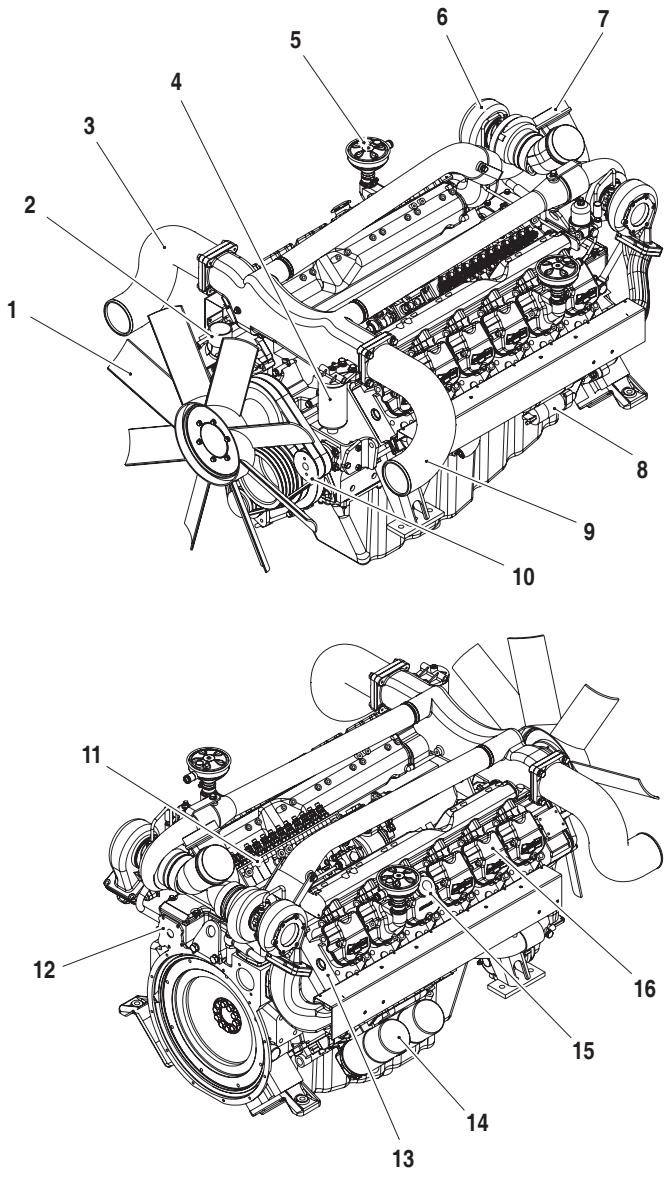

EH5OM006

1. Cooling fan
2. Water outlet
3. Air pipe
   (Intercooler to intake manifold)
4. Fuel filter
5. Breather
6. Turbo charger
7. Air pipe
   (Air cleaner to turbocharger)
8. Starter
9. Air pipe
   (Turbocharger to inter cooler)
10. Idle pulley
11. Injection pump
12. Fly wheel housing
13. Cylinder head
14. Oil filter
15. Oil filler cap
16. Cylinder head cover

https://truckmanualshub.com/

4) P158LE : Generator engine

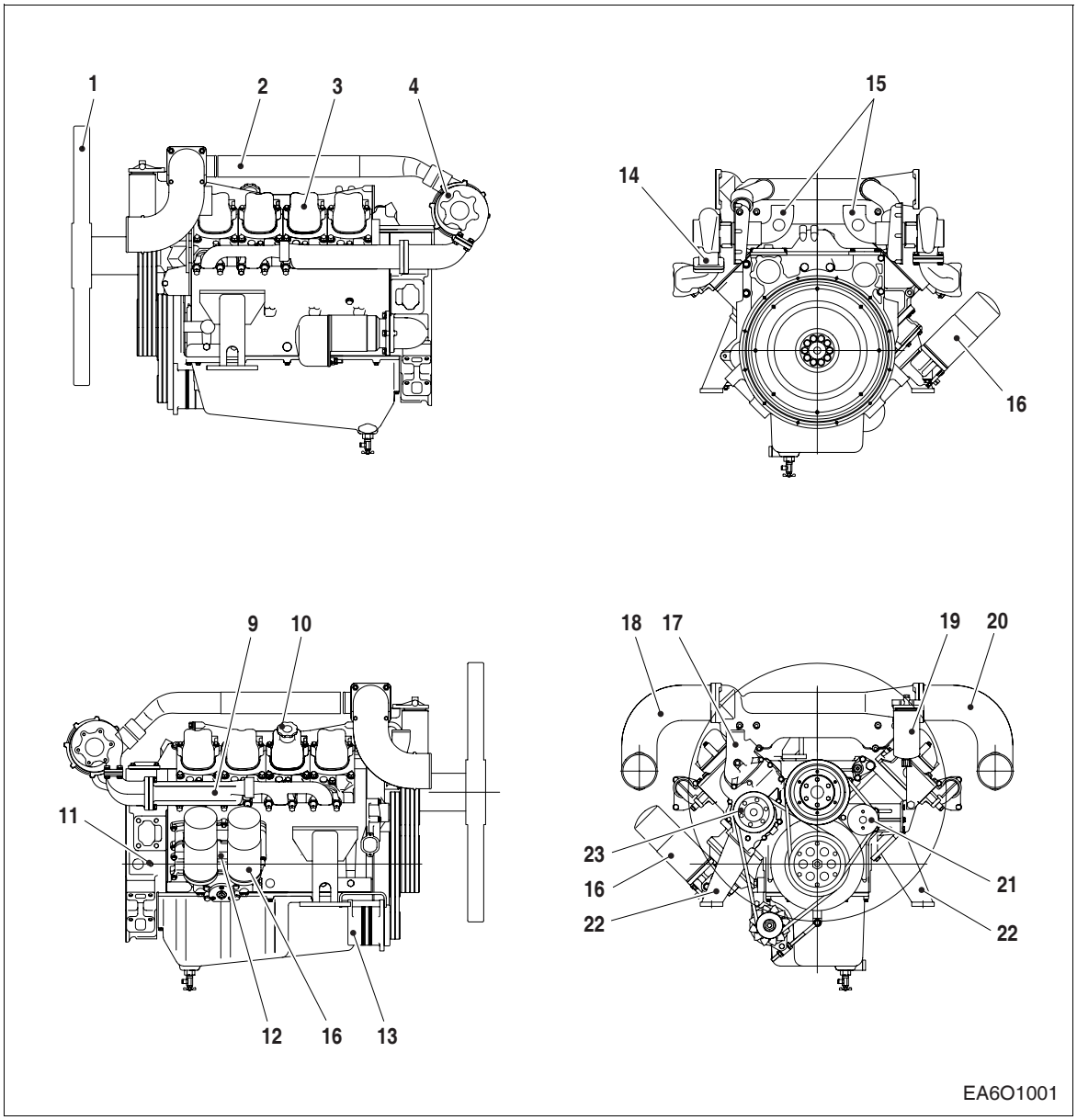

1. Cooling fan
2. Air pipe
3. Cylinder head cover
4. Turbocharger
5. Oil drain valve
6. Oil pan
7. Starter
8. Flywheel housing
9. Exhaust manifold
10. Oil filler cap
11. Pick up sensor
12. Oil cooler
13. Alternator
14. Exhaust elbow
15. Air pipe (Air cleaner to turbocharger)
16. Oil filter
17. Cooling water outlet
18. Air pipe (Air cleaner to turbocharger)
19. Fuel filter
20. Air pipe (Turbocharger to inter cooler)
21. Idle pulley
22. Engine mounting bracket
23. Water pump

https://truckmanualshub.com/

5) P180LE : Generator engine

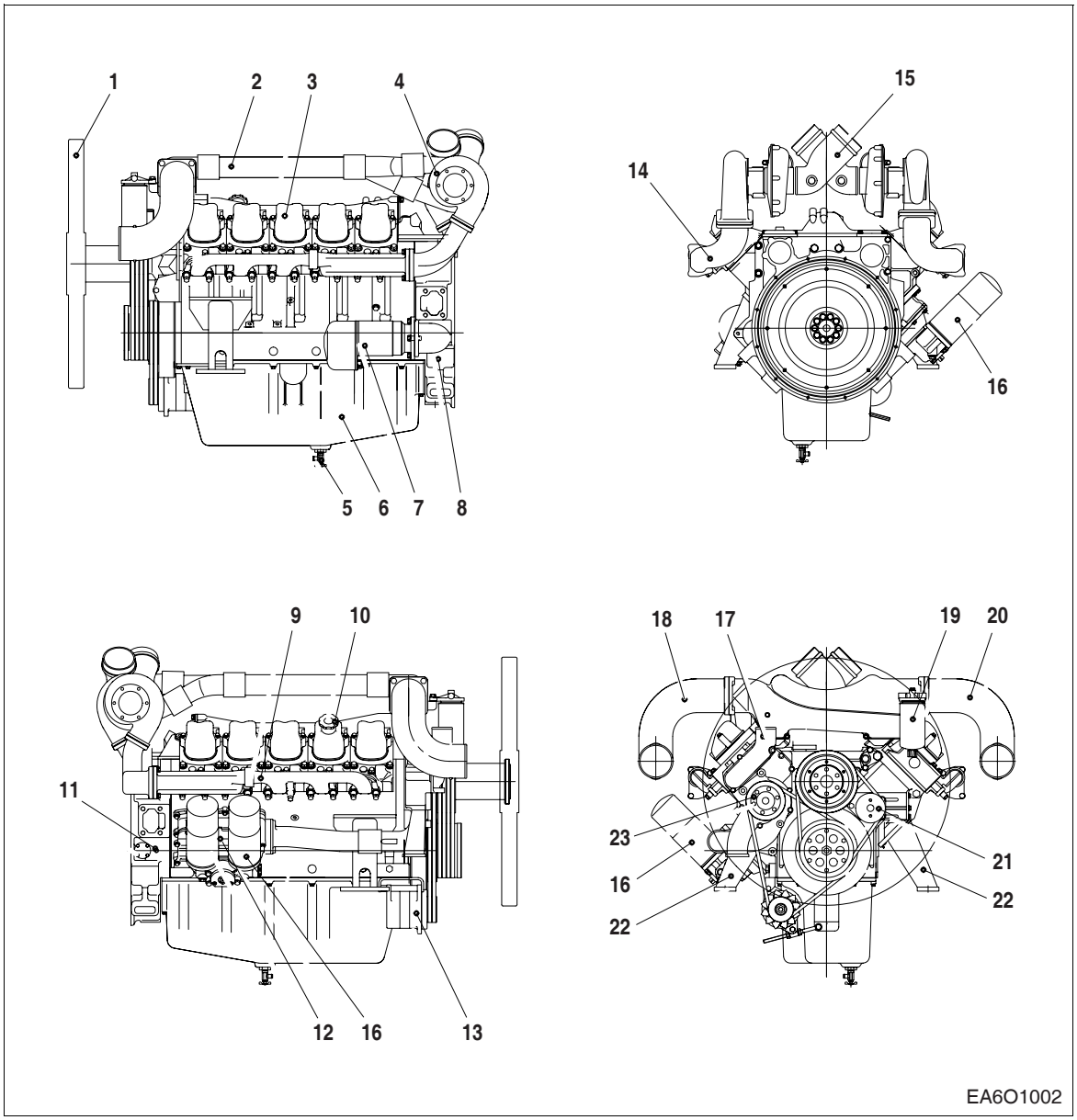

1. Cooling fan
2. Air pipe
3. Cylinder head cover
4. Turbocharger
5. Oil drain valve
6. Oil pan
7. Starter
8. Flywheel housing
9. Exhaust manifold
10. Oil filler cap
11. Pick up sensor
12. Oil cooler
13. Alternator
14. Exhaust elbow
15. Air pipe (Air cleaner to turbocharger)
16. Oil filter
17. Cooling water outlet
18. Air pipe (Air cleaner to turbocharger)
19. Fuel filter
20. Air pipe (Turbocharger to inter cooler)
21. Idle pulley
22. Engine mounting bracket
23. Water pump

https://truckmanualshub.com/

6) P222LE : Generator engine

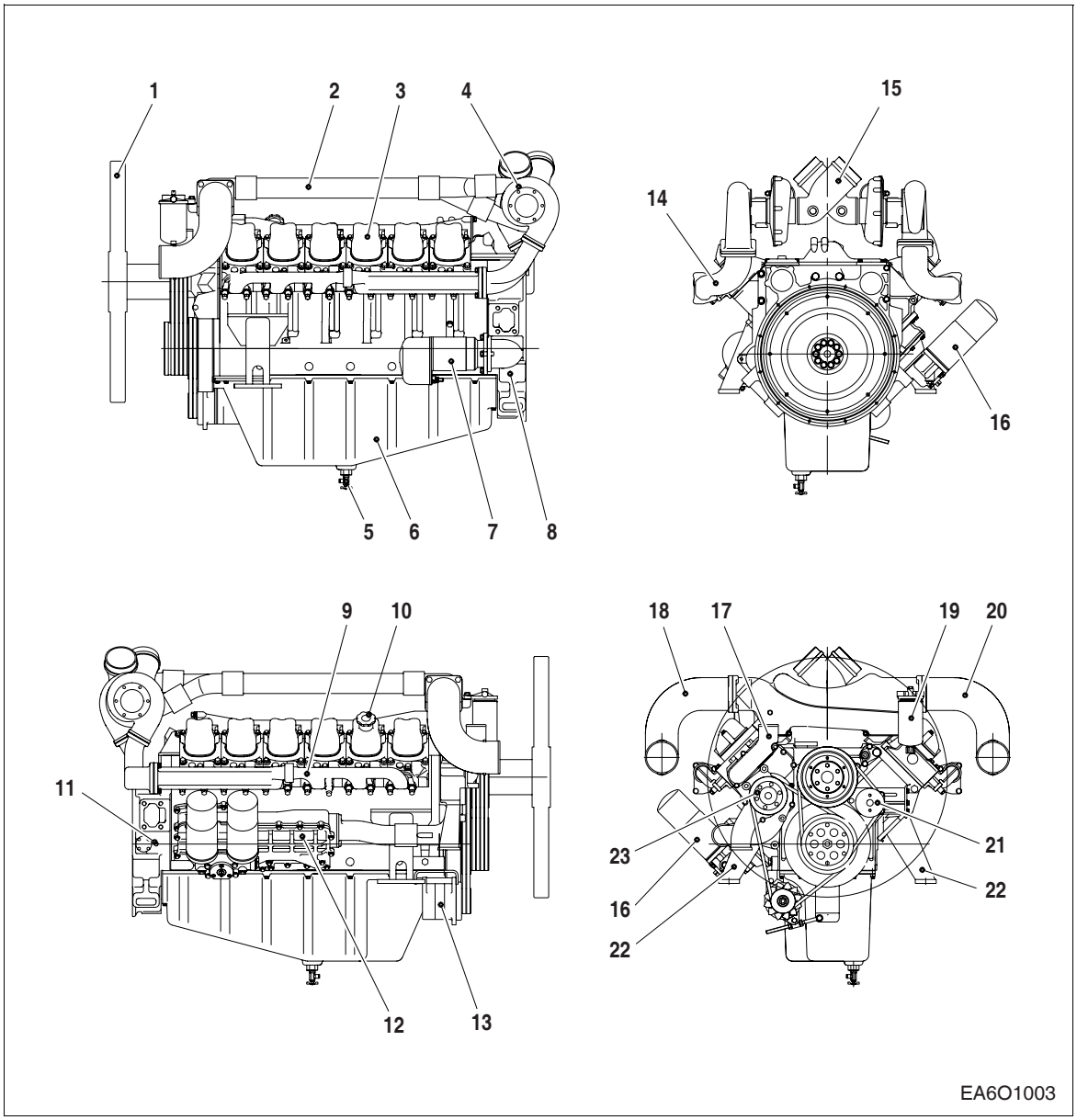

1. Cooling fan
2. Air pipe
3. Cylinder head cover
4. Turbocharger
5. Oil drain valve
6. Oil pan
7. Starter
8. Flywheel housing
9. Exhaust manifold
10. Oil filler cap
11. Pick up sensor
12. Oil cooler
13. Alternator
14. Exhaust elbow
15. Air pipe (Air cleaner to turbocharger)
16. Oil filter
17. Cooling water outlet
18. Air pipe (Air cleaner to turbocharger)
19. Fuel filter
20. Air pipe (Turbocharger to inter cooler)
21. Idle pulley
22. Engine mounting bracket
23. Water pump

https://truckmanualshub.com/

2. Technical Information

2.1. Engine Model and Serial Number

- The engine model and serial number is located on the engine as illustrated. These numbers are required when requesting warranty and ordering parts. They are also referred to as engine model and serial number because of their location.

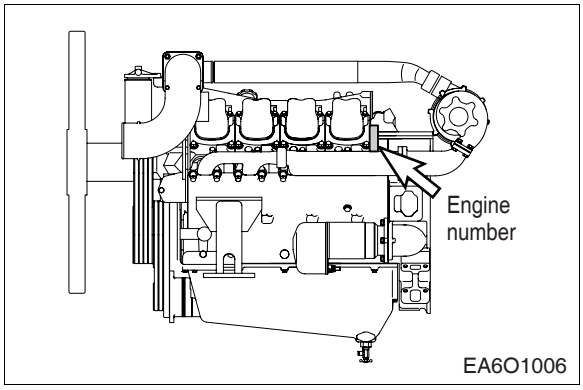

- **Engine serial No. (example 1 : P158LE)**

EAZOA 8 00001

Serial No.
Production Year(2008)
Engine Model Suffix

- **Engine serial No. (example 2 : P180LE)**

EASOA 8 00001

Serial No.
Production Year(2008)
Engine Model Suffix

- **Engine serial No. (example 3 : P222LE)**

EAYOA 8 00001

Serial No.
Production Year(2008)
Engine Model Suffix

https://truckmanualshub.com/

- **Engine serial No. (example 4 : PU158TI)**

EAZPA 8 00001

Serial No.
Production Year(2008)
Engine Model Suffix

- **Engine serial No. (example 5 : PU180TI)**

EASPA 8 00001

Serial No.
Production Year(2008)
Engine Model Suffix

- **Engine serial No. (example 6 : PU222TI)**

EAYPA 8 00001

Serial No.
Production Year(2008)
Engine Model Suffix

2.2. Engines Characteristic

- The generator engine(P158LE/P180LE/P222LE) and power unit engine(PU158TI/PU180TI/PU222TI) series are V-type liquid-cooled 8/10/12-cylinder four-stroke Diesel engines with direct injection.

2.2.1. Oil gallery cooling type piston

- Oil gallery cooling is used for the piston of the engine.
- When thermal loading is high, piston cooling by means of an oil gallery in the crown is normally necessary to prevent crown cracking and ring sticking. The design of the gallery, the design and location of the oil spray nozzle and the quantity of oil flowing in the gallery are critical in order to achieve the desired temperature reduction.

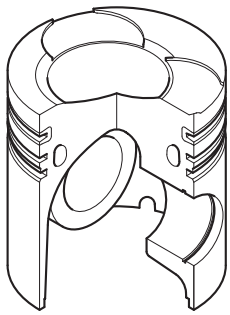

ED7OM007

- The cross section shape of the gallery should be designed to achieve sufficient oil movement to maximize cooling efficiency.

https://truckmanualshub.com/

2.2.2. Engine block

- The cylinder block is a single piece of alloy cast iron. To increase its stiffness, it is extended to a level below the crankshaft center line. The engine has replaceable wet cylinder liners and individual cylinder heads with strung-in valve seat rings and replaceable valve guides.

2.2.3. Piston / Connecting rod / Crank assembly

- The forged crankshaft has screwed-on counterweights. Radial seals with replaceable wearing rings on crankshaft and flywheel are provided to seal the crankcase penetrations.
- The connecting rods are die-forged, diagonally split and can be removed through the top of the cylinders together with the pistons. Crankshaft and connecting rods run in steel-backed lead bronze ready-to fit type bearings.

2.2.4. Engine timing

- Camshaft, oil pump and injection pump are driven by a gear train arranged at the flywheel end.

1. Crankshaft gear
2. Oil pump drive gear
3. Oil pump impeller gears
4. Camshaft drive gear
5. Injection pump drive gear

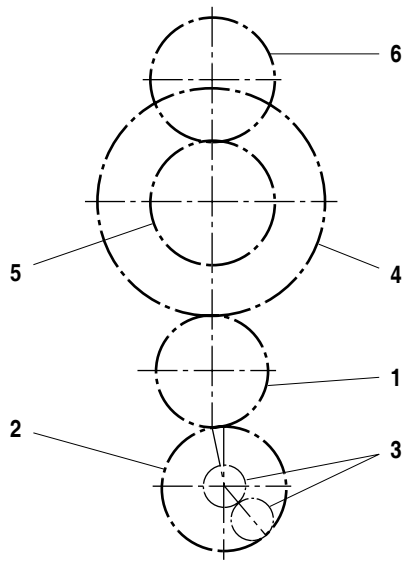

EA6O3001

2.2.5. Valves

- The overhead valves are actuated via chilled cast iron tappets, push rods and rocker arms from the camshaft.

https://truckmanualshub.com/

2.2.6. Engine lubrication

- The engine is equipped with force-feed lubrication.
  The pressure is produced by a gear pump whose drive gear is in direct mesh with the crankshaft gear at the flywheel end.
- The oil pump draws the oil from the oil sump and delivers it through the oil cooler and oil filter to the main distributor gallery and from there to the main bearings, big-end bearings and camshaft bearings as well as to the small-end bearings and the rocker arms.

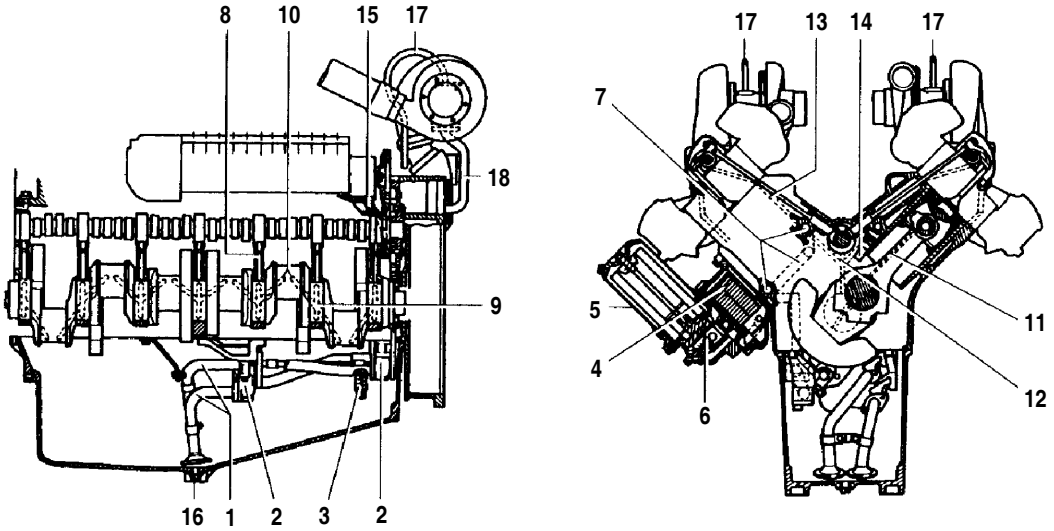

EA6O3002

1. Oil suction pipes
2. Oil pumps
3. Oil relief valves
4. Oil cooler
5. Oil filter
6. Bypass valve
7. Main oil galleries
8. Oil gallery to crankshaft
9. Ports for main bearing lubrication
10. Ports for big end bearing lubrication
11. Small end bearing lubrication
12. Camshaft bearing lubrication
13. Rocker arm lubrication
14. Spray nozzle
15. Injection pump lubrication
16. Oil drain plug
17. Lube oil pipes to turbochargers
18. Oil return from turbochargers

https://truckmanualshub.com/

- The injection pump and the turbocharger are also connected to the engine lubricating system. The cylinder walls and timing gears are splash-lubricated.
  Each cylinder has an oil jet provided for cooling the underside of the pistons.
  The lube oil is cleaned in a full-flow oil filter. Depending on the agreed extent of delivery and the design of the engine, the lube oil circuit can be equipped with oil pressure monitors (advance warning and cut-off function) which shut the engine down in the event of a sudden loss of pressure.

(1) Oil cooler

An oil cooler is provided between the oil filter and the crankcase. This cooler is of the flat tube type with turbulence inserts and operated by the coolant.

2.2.7. Engine cooling system

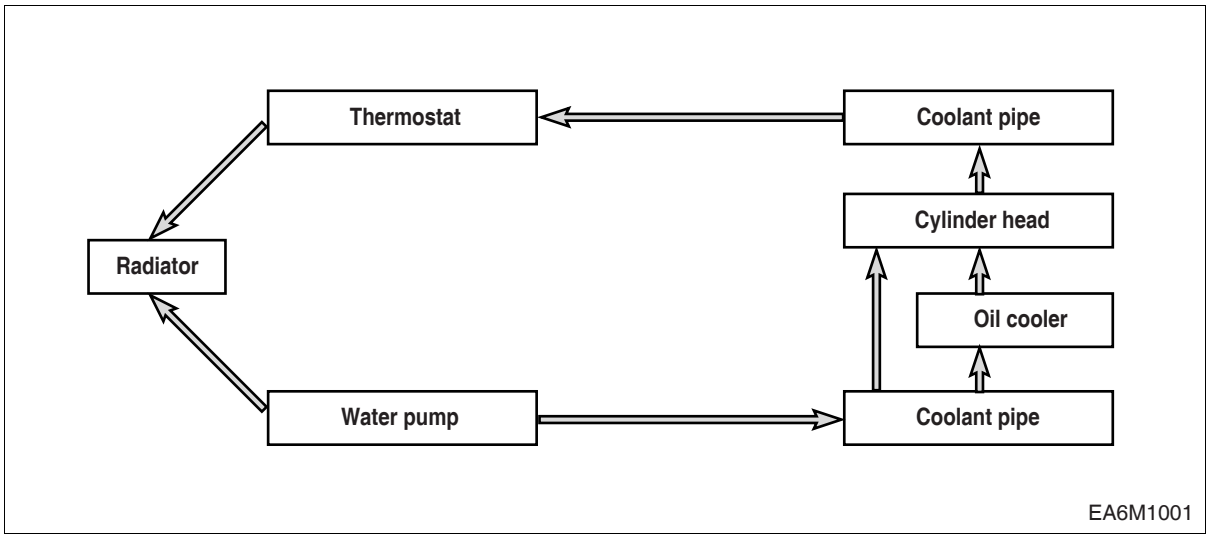

https://truckmanualshub.com/

2.2.8. Fuel system

The fuel is delivered by the fuel lift pump via the fuel filter to the injection pump and from there to the injectors.

The fuel is sprayed into the cylinder through nozzles fitted in screw-fit injections in the cylinder heads.

Excessive fuel delivered and leak fuel from the injectors flow through the return pipe back to the tank.

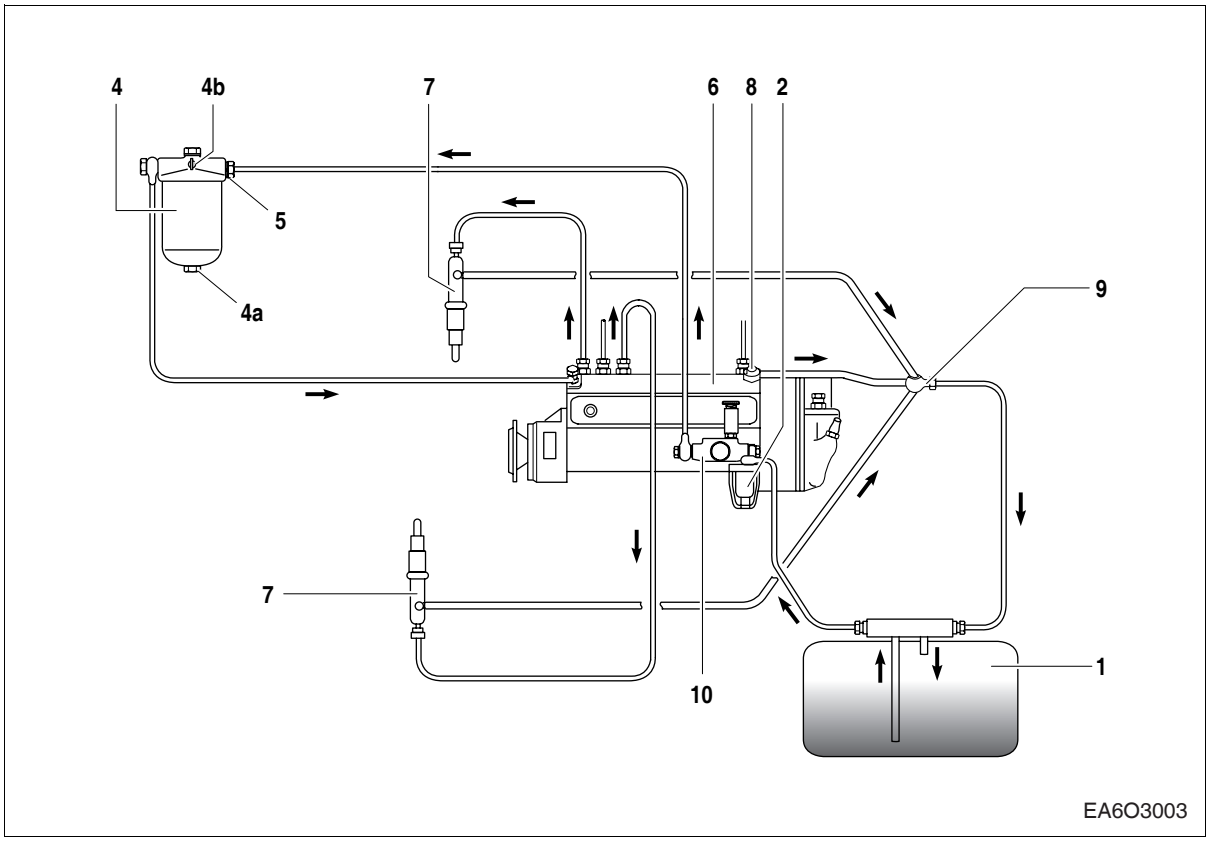

1. Fuel tank
2. Strainer
3. Fuel Filter
4. Fuel filter assembly

4a. Fuel water drain plug

4b. Air bleeding plug (for fuel filter)

5. Fuel pipe connector
6. Injection pump
7. Injector
8. Fuel pressure relief valve
9. Fuel return pipe
10. Fuel feed pump

https://truckmanualshub.com/

If Diesel fuel which contains moisture is used the injection system and the cylinder liners / pistons will be damaged. This can be prevented to same extent by filling the tank as soon as the engine is switched off while the fuel tank is still warm (formation of condensation is prevented). Drain moisture from storage tanks regularly. Installation of a water trap upstream of the fuel filter is also advisable.

- **Fuel oil selection chart**

General Fuel Classification	ASTM Test	No. 1 ASTM 1-D	No. 2 ASTM 2-D	DIN 51601
Gravity, °API #)	D 287	40 ~ 44	33 ~ 37	0.815 ~ 0.855
Flash Point Min. °F (°C)	D 93	100 (38)	125 (52)	131 (55)
Viscosity, Kinematic cST 100 °F (40 °C)	D 445	1.3 ~ 2.4	1.9 ~ 4.1	1.8 ~ 10
Cloud Point °F #)	D 2500	See NOTE 1)	See NOTE 1)	See NOTE 1)
Sulfur Content wt%, Max.	D 129	0.5	0.5	0.15
Carbon Residue on 10 %, wt%, Max.	D 524	0.15	0.35	0.1
Accelerated Stability Total Insolubles mg/100 ml, Max. #)	D 2274	1.5	1.5	
Ash, wt%, Max.	D 482	0.01	0.01	
Cetane Number, Min. +)	D 613	45	45	> 45
Distillation Temperature, °F (°C) IMP, Typican #) 10 % Typical #) 50 % Typical #) 90 % +) End Point #)	D 86	 350(177) 385(196) 45(218) 500(260) Max. 550(288) Max.	 375(191) 430(221) 510(256) 625(329) Max. 675(357) Max.	 680(360)
Water & Sediment %, Max.	D 1796	0.05	0.05	0.05

#) Not specified In ASTM D 975

+) Differs from ASTM D 975

NOTE :

The cloud point should be -12 °C (10 °F) below the lowest expected fuel temperature to prevent clogging of fuel fitters by crystals.

https://truckmanualshub.com/

2.2.9. Injection pump

No alterations must be made to the injection pump. If the lead seal is damaged the warranty on the engine will become null and avoid.

- **Faults**

  We strongly recommend that any faults developing in the injection pump should be taken care of by authorized specialist personnel.

- **Bleeding the fuel system**

  Bleeding the fuel filter is by releasing the bleed screws and operating the manual primer.
  The suction chamber of the injection pump is continuously bled via the relief valve during operation If the suction chamber is completely empty, e.g., when fitting a new pump, filling and bleeding it is by actuating the manual primer.

- **Fuel lift pump**

  The fuel lift pump is operated by the injection pump camshaft via the roller tappet.

- **Strainer**

  After every 200 hours of operation the fuel strainer connected upstream of the fuel lift pump should be cleaned.

2.2.10. Fuel filter

- After every 1,200 hour of operation, drain the water and sediment from the fuel-water separator.
- Shut off the engine. Use your hand to open the drain valve(6).
  Turn the valve counter clockwise approximately 2 ~ 3 turns until draining occurs. Drain the filter sump of water until close fuel is visible.
- Turn the valve clockwise to close the drain valve. Do not over tighten the valve, overtightening can damage the threads.

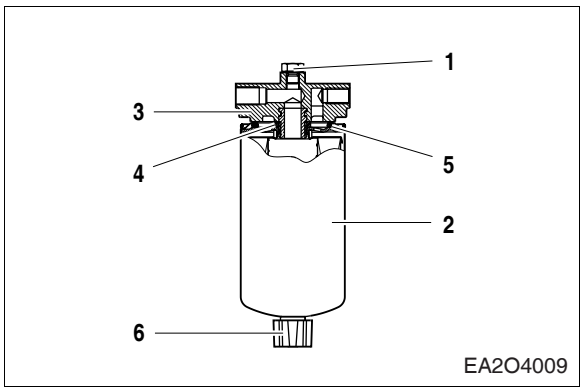

https://truckmanualshub.com/

2.2.11. Replacement of fuel filter

- Clean the area around the fuel filter head(3).
- Remove the fuel filter(2).
- Remove the fuel filter thread adapter seal ring(4).
  Use a clean lint free cloth to clean the gasket surface of the fuel filter head(3).
- Install the new thread adapter seal ring(4)supplied with the new filter.
  Use clean oil to lubricate the filter seal(5), and fill the new filter with clean fuel.
- Install the filter on the filter head(5).
  Tighten the filter until the gasket contacts the filter head surface.
  Tighten the filter on additional one-half to three-fourths of a turn, on as specified by the filter manufacturer.

NOTE :

Mechanical over tightening of the filter can distort the thread or damage the filter element seal.

2.2.12. Injector maintenance

The injectors are designed to spray the fuel delivered by the injection pump directly into the spherical combustion chamber in the piston crown.

The injector consists of the nozzle and the nozzle holder.

A copper gasket fitted to the injector ensures gas-tight seating and good heat dissipation.

The opening pressure of the nozzle is adjusted by means of shims at the compression spring.

1. Rod type filter
2. Cap nut
3. Compression spring
4. Compression pin
5. Cap nut for fixed nozzle
6. Nozzle needles
7. Connect hole for fuel delivery
8. Nozzle holder
9. Connect tube for overflow
10. Shim
11. Pin
12. Nozzle bush

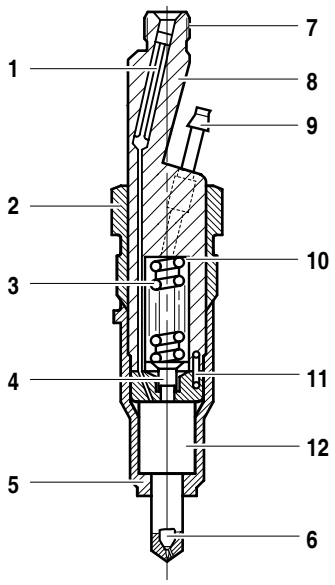

EA6O5006

https://truckmanualshub.com/

2.2.13. Removal, dismantling and cleaning

- Unscrew delivery pipe at nozzle holder and at the injection pump.
- Remove leak-off pipe.
- Release union screw of nozzle holder with special wrench. (EI.03004-0225)
- Remove nozzle holder with gasket from the cylinder head.

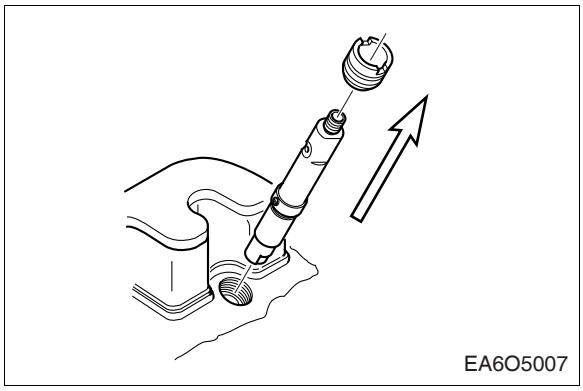

Note for cleaning nozzles

- Clean nozzle body externally from soot and carbon, When cleaning several nozzles at the same time, make sure nozzle bodies and needles are not mixed up. Visually inspect needle and body.
- Cleaning is useless if the seat of the needle is indented or the pintle is damaged and the nozzle should be replaced.
- Clean annular groove with scraper over full circumference. Wash out dislodged carbon deposits and dirt.
- Scrape needle seat with cleaning cutter, Dip cutter in test oil before use. The cutter can also be clamped in a lathe.
- Polish needle seat with wooden cleaning tool, preferably by chucking the needle in a lathe at the pintle end.
- Clean the spray holes of nozzles by chucking a cleaning needle of suitable diameter in the collect. If the carbon deposits in the spray holes cannot be removed by rotating and pressing, have the needle project only slightly from the collect and drive out the carbon by lightly tapping on the tool.
- Before reassembly thoroughly wash nozzle body and needle in clean test oil.
- Hold the needle at the pintle end only ; to avoid corrosion, do not touch the lapped surfaces of the needle with you fingers.
- Thoroughly clean all other parts of the nozzle holder with clean fuel.
- Check nozzle discharge pressure in nozzle tester.
  The edge-type filter should not be pressed into the nozzle holder by more than about 5mrn. If this depth is exceeded the injector must be replaced.

<Operating pressure>

New nozzle holder	300 + 8 kg/cm^2
Used nozzle holder	285 + 8 kg/cm^2

CAUTION :
Do not hold your hands under the fuel jet, as there is a rise of injury.
Do not inhale the atomized oil fuel.
If possible, work under an extraction system.

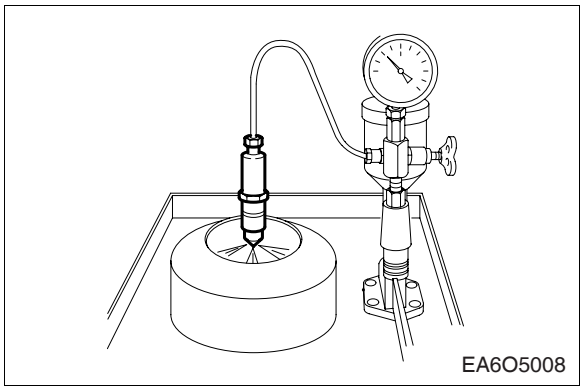

https://truckmanualshub.com/

2.2.14. Installation

- Clean seat in cylinder head.
- Insert nozzle holder with new gasket.
  Tighten union nut with 120 N·m.
- Install injection lines free of constraint.
  Install leak fuel lines. screw delivery pipe at nozzle holder and at the injection pump.

Torque	12 kg·m

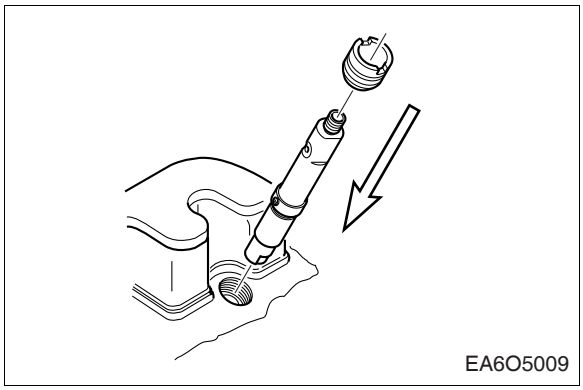

CAUTION :
The injection lines are designed for high operating pressures and should thus be handled with particular core.

- When mounting the pipes to the engine take care of good fitness.
- Do not bend pipes to permanent deformation. (not for replacing the nozzles either)
- Do not mount any heavily bent pipes.
- Avoid bending the pipes at the ends by more than 2 to 3 degrees.
- In case of faults in the injection system which might have resulted in excessive operating pressures, not only the failed part but also the injection line has to be replaced.

2.2.15. Fan belt

- Use a fan belt of specified dimensions, and replace if damaged, frayed, or deteriorated.
- Check the fan belt for belt tension.
  If belt tension is lower than the specified limit, adjust the tension by relocating the alternator and idle pulley. (specified deflection: 10 ~ 15 mm when pressed down with thumb)

2.2.16. Engine oil

- Check oil level with the oil level gauge and replenish if necessary.
- Check the oil level with the engine cooled. If the engine is warm, allow time for 5 ~ 10 minutes for oil drain into the crankcase before checking oil level. The oil level must be between Max and Min. lines on the gauge.
- Engine oil should be changed at the specified intervals. (200 hr)
  Oil in the oil filter should be changed simultaneously.
  – First oil change : 50 hr operating
- The oil viscosity grades should be selected SAE NO.15W40 and API CD or CE.

https://truckmanualshub.com/

2.2.17. Turbo charger

The exhaust gases of the engine are passed through the turbine rotor of the turbo charger Air impeller mounted on the same shaft draws in fresh air and delivers it at a higher pressure to the cylinders. The turbo charger is air-cooled. Lubrication of the main bearing is by oil under Pressure from the engine lubricating system.

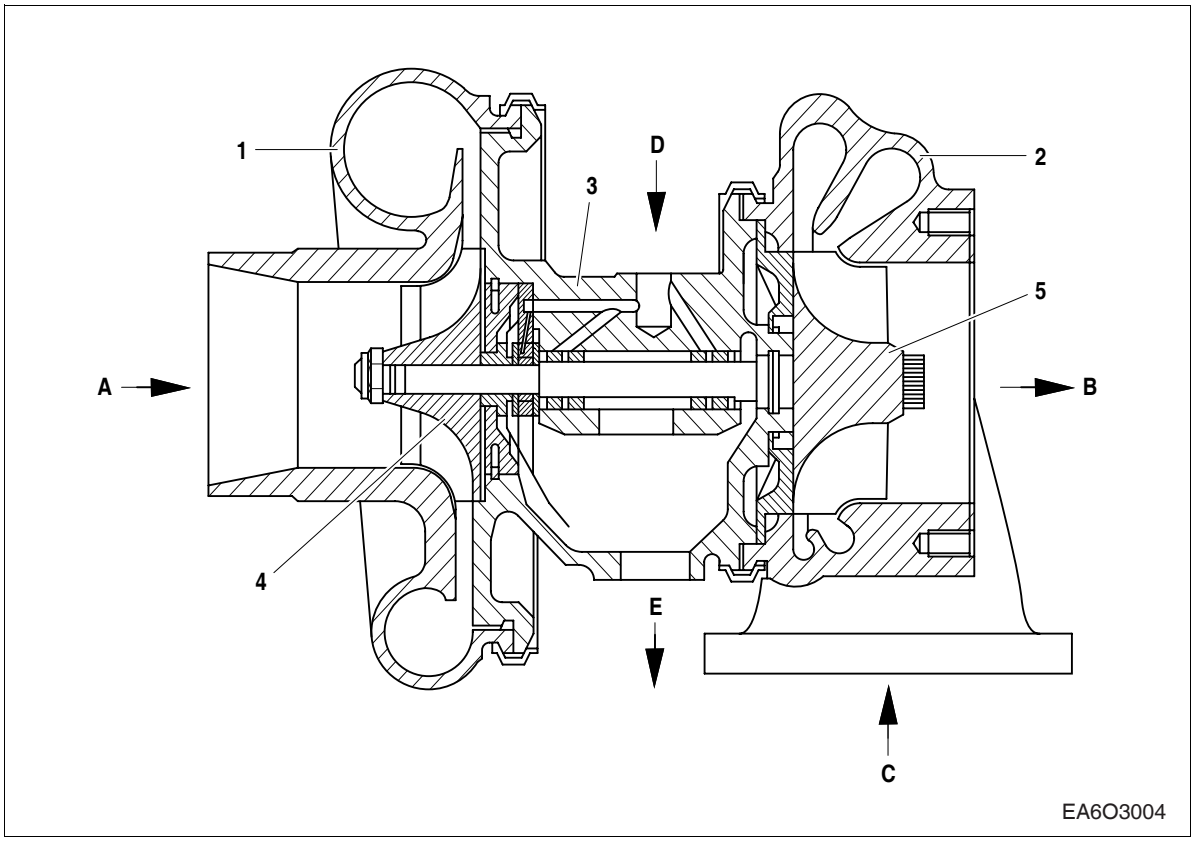

1.	Compressor casing	A.	Air inlet
2.	Turbine casing	B.	Gas outlet
3.	Compressor wheel	C.	Gas inlet
4.	Impeller	D.	Oil supply
5.	Turbine	E.	Oil return

https://truckmanualshub.com/

2.2.18. Intercooler

The intercooler is air to air type and has a large cooling fan capacity. The intercooler life and performance depends on the intake air condition greatly. Fouled air pollutes and clogs the air fins of intercooler. As a result of this, the engine output is decreased and engine malfunction is occurred. So you always check whether the intake air systems like air filter element are worn or polluted.

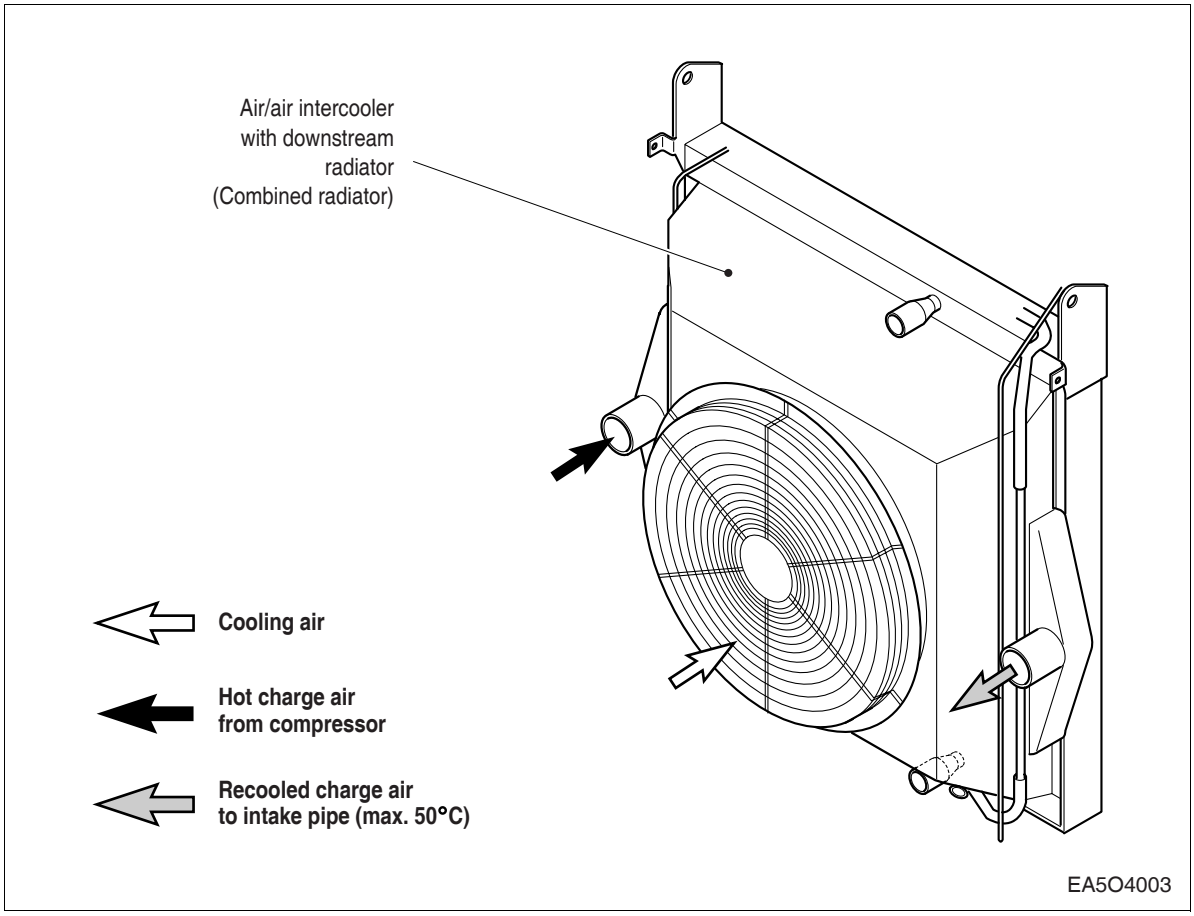

– Cleaning of intercooler fins : Every 600 hours.

2.2.19. Cooling system

The engine has a liquid-cooling system.

The water pump is a maintenance-free impeller pump driven by V-belts from the crankshaft pulley.

Depending on the agreed extent of delivery and the design of the engine, the coolant circuit can be equipped with temperature monitors which, in the event of loss of coolant, shut the engine down.

https://truckmanualshub.com/

2.2.20. Filling-in of coolant
(only when engine has cooled down)

- Fill in the coolant slowly.
- Make sure that all air can escape from the cooling system.
- Run the engine briefly and then check coolant level once more.

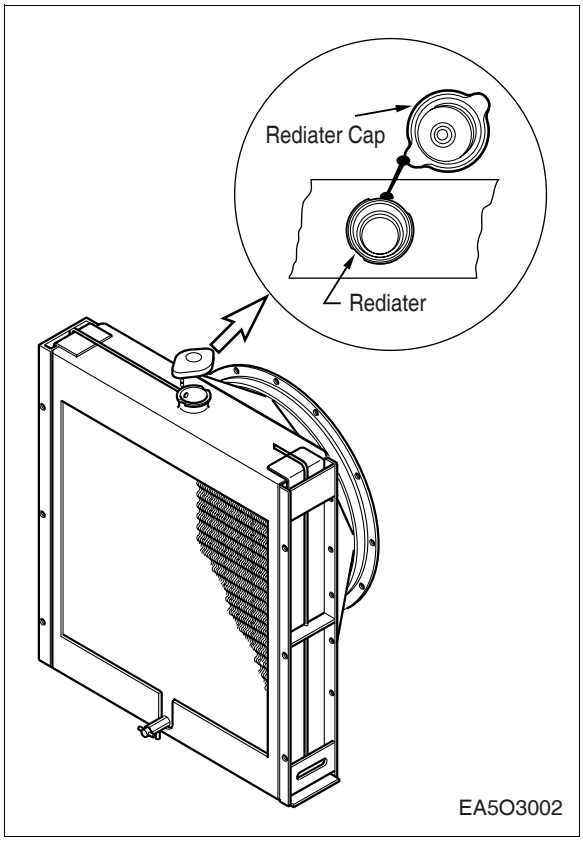

If, in an exceptional case, the coolant level has to be checked when the engine is warm from operation, first turn the somewhat smaller cap with working valves to the first notch. Let off pressure and then close this cap again. After this the cap on filler neck can be removed without risk of scalding.
Coolant must be added at the filler neck only. Do not put cold coolant into an engine which is warm from operation. If no hot water (80 °C) is available, add normal warm water very slowly as the engine runs until the coolant level is correct.
Ensure that the ratio of water to antifreeze is correct. Find the cause of the loss of coolant and have it eliminated.

WARNING :
If the cap with the working valves is opened, there is the rise that it will not close tightly again afterwards. The excess pressure required in the system will then no longer build up. Premature boiling occurs and coolant is lost. To prevent damage to the engine, open this cap only in exceptional circumstances and fit a new one as soon as possible afterwards.

https://truckmanualshub.com/

2.2.21. Draining of coolant

Drain coolant as follows when cooling system has cooled down;

- Remove cover from filler neck of radiator.
- Remove drain plug in the cylinder block.

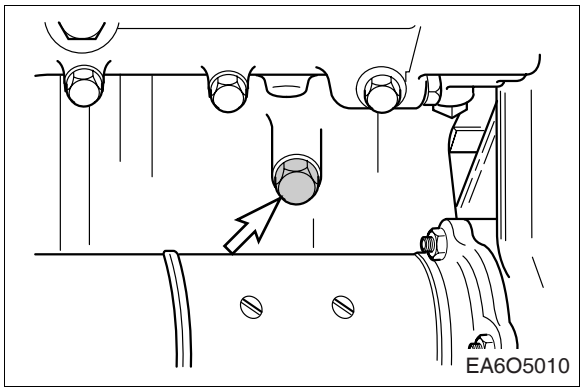

Improper mixing of anti-freeze and corrosion inhibitors may lead to lime and corrosion deposits in the engine cooling system which can jeopardize cooling efficiency.
In such cases it is necessary to clean the cooling system at suitable intervals.

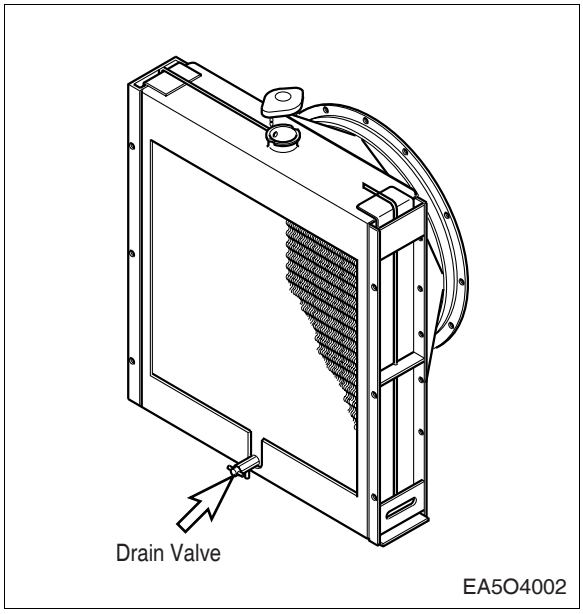

2.2.22. Cooling water

- Regarding the cooling water that is to be used for engine, the soft water not the hard water must be used.
- The engine cooling water can be used diluting it with antifreezing solution 40 % and the additive for rust prevention (DCA4) 3 ~ 5 %.
- The density of above solution and additive must be inspected every 500 hours to maintain it properly.

NOTE :
The proper density control of antifreezing solution and rust preventing additive will be able to prevent the rusting effectively and maintain the stable quality of engine.
For the improper control might give the fatal damage to the cooling water pump and cylinder liners, detail care is needed.

- Since P158LE/P180LE/P222LE/PU158TI/PU180TI/PU222TI cylinder liner is wet type, particularly the cooling water control should be applied thoroughly.
- The density of antifreezing solution and additive for rust prevention is able to be confirmed by the cooling water test kit (Fleetguard CC2602M)
- **How to use the cooling water test kit**

(1) When the cooling water temp. of engine is in the range of 10 ~ 55 °C, loosen the plug for cooling water discharge and fill the plastic cup about a half.

NOTE :

In taking the cooling water sample, if the water in auxiliary tank were taken, it is hard to measure the accurate density. Take the cooling water sample necessarily loosening the cooling water discharge plug.

(2) At the state of a test paper soaked in the sampled water, after taking the paper out through water agitation, shake off the water.

(3) Wait for about 45 sec. till the color change of test paper.

NOTE :

However, it should not elapse longer than 75 sec, and if it did, the hue would change.

(4) Make the numerical value by comparing the test paper which hue has changed with the color list of label on storage bottle.

(5) By comparing the hue changed into yellowish green or so with the green color indication of test paper storage bottle, confirm the density. (Then, the density indication must be in the hue range of 33 % to 50 %).

(6) The brown at the middle of test paper and the lower pink color indication represent the additive state for rust prevention, and the proper range is that the meeting numerical value of brown (vertical) and pink color (horizontal) locates in the range of 0.3 to 0.8 at the color list of label on the test paper storage bottle.

(7) In case of less than 0.3, replenish the additive for rust prevention (DCA4), and in case of more than 0.8, pour out the cooling water about 50 % and then readjust the density after refilling with clean fresh water.

- **Amount of Anti-freeze in winter**

Ambient Temperature (°C)	Cooling water (%)	Anti-freeze (%)
Over -10	85	15
-10	80	20
-15	73	27
-20	67	33
-25	60	40
-30	56	44
-40	50	50

https://truckmanualshub.com/

2.2.23. Fuel filter

- Drain water in cartridge with loosening the cock under filter manually (6) from time to time.
- The fuel filter should be replaced at every 400 hours.

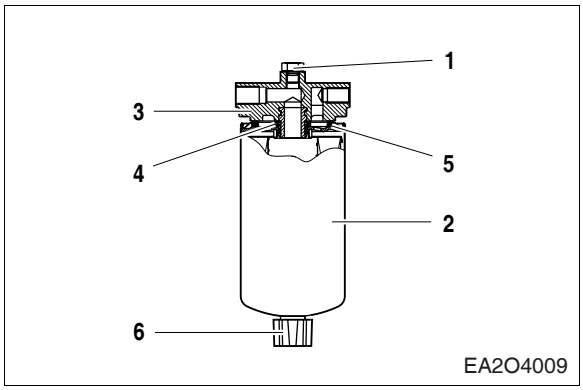

- Check for oil pressure and oil leaks, and repair or replace the oil filter if necessary.
- Change the oil filter cartridge simultaneously at every replacement of engine oil (200 hours).

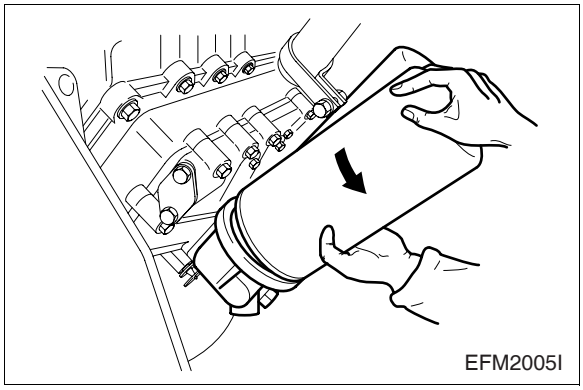

2.2.24. Air cleaner

- In case that elements are deformed, damaged or if the air cleaner has a crack, replace it.
- By the definite interval, the elements must be cleaned and replaced.

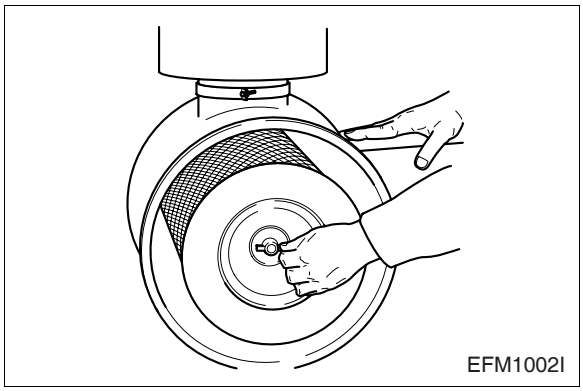

2.2.25. Valve clearance adjust procedure

- After letting the #1 cylinder's piston come at the compression top dead center by turning the crankshaft, adjust the valve clearances.
- Loosen the lock nuts of rocker arm adjusting screws and push the feeler gauge of specified value between a rocker arm and a valve stem and adjust the clearance with adjusting screw respectively and then tighten with the lock nut.
- As for the valve clearance, adjust it when in cold, as follows.

Model	Intake Valve	Exhaust Valve
P158LE/P180LE/P222LE PU158TI/PU180TI/PU222TI	0.3 mm	0.4 mm

https://truckmanualshub.com/

- **Adjusting Sequence of Valve Clearance**

  This is a precision method, but it takes more time.

*** 8 Cylinder Engine (P158LE/PU158TI)**

Valve overlapping on cylinder (Intake & Exhaust valve)	1	5	7	2	6	3	4	8
Adjusting valves on cylinder (Intake & Exhaust valve)	6	3	4	8	1	5	7	2

*** 10 Cylinder Engine (P180LE/PU180TI)**

Valve overlapping on cylinder (Intake & Exhaust valve)	1	6	5	10	2	7	3	8	4	9
Adjusting valves on cylinder (Intake & Exhaust valve)	7	3	8	4	9	1	6	5	10	2

*** 12 Cylinder Engine (P222LE/PU222TI)**

Valve overlapping on cylinder (Intake & Exhaust valve)	1	12	5	8	3	10	6	7	2	11	4	9
Adjusting valves on cylinder (Intake & Exhaust valve)	6	7	2	11	4	9	1	12	5	8	3	10

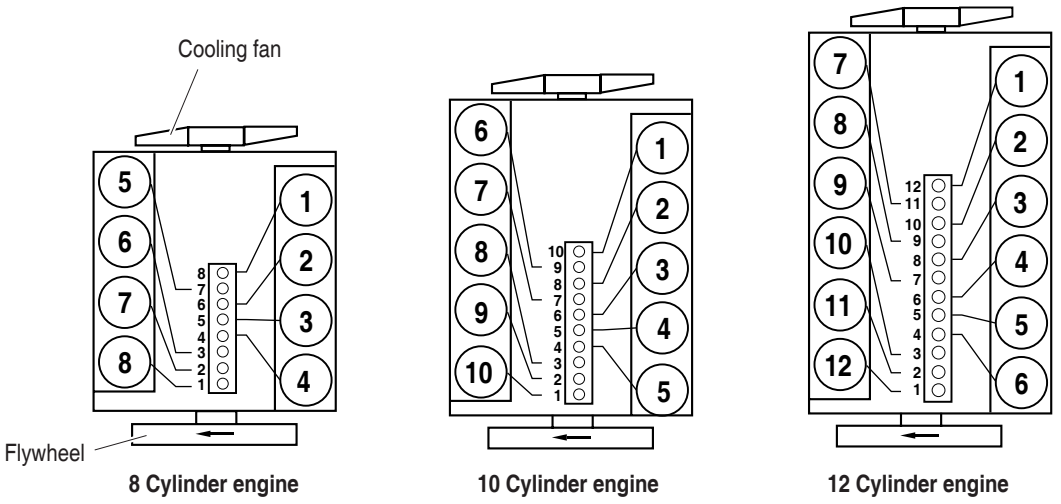

EA6O6008

– No. 1 Cylinder is located at the side where cooling water pump was installed.

https://truckmanualshub.com/

2.2.26. Cylinder compression pressure

- Stop the engine after warming up, and take out nozzle holder assembly.

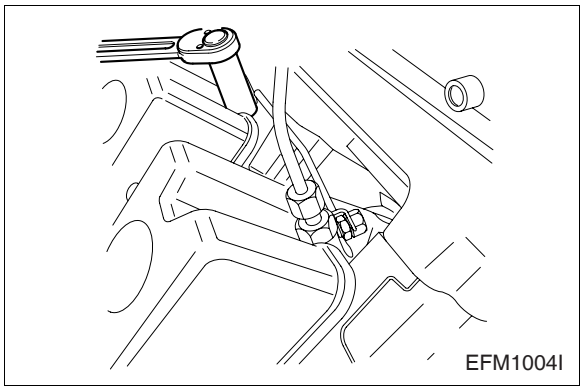

- Install the special tool (compression gauge adapter) at the nozzle holder hole, and connect the compression pressure gauge there.

Standard value	28 kg/cm^2 over
Limit value	24 kg/cm^2
Difference between each cylinder	Within ± 10 %

– Condition : Water temperature 20 °C,
Engine rotation 200 rpm

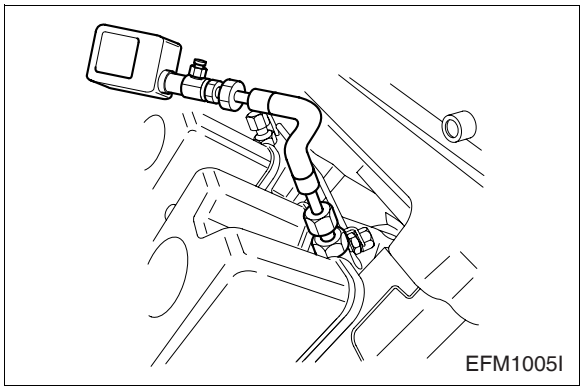

2.2.27. Injection nozzle

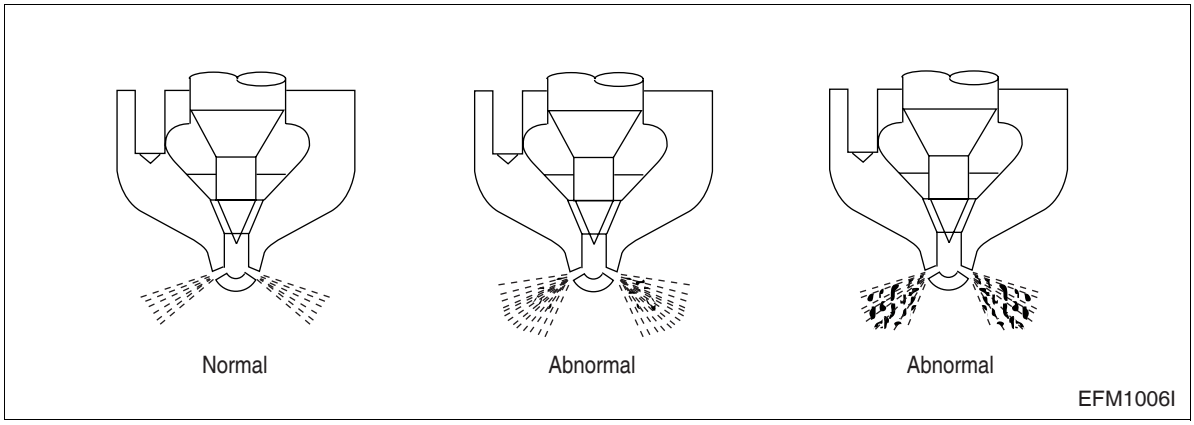

- Install a nozzle on the nozzle tester.
- If the inspected injection pressure is less than the specified value(285 kg/cm^2), adjust using the adjusting shims.
- Check the atomizing state and replace it if abnormal.

https://truckmanualshub.com/

2.2.28. Fuel injection pump

- Check the housing crack, damage etc. and replace it if abnormal.
- Check if the idle operation and speed regulating lever's sealing is removed.
- The adjustment and testing of fuel injection pump should necessarily be done at the test bench.

2.2.29. Battery

- Inspect for any leakage of electrolytic solution owing to battery crack, and replace the battery in case of poor condition.
- Inspect for amount of electrolytic solution, and replenish if insufficient.
- Measure the gravity of electrolytic solution, if less than specified value (1.12 ~ 1.28), replenish.

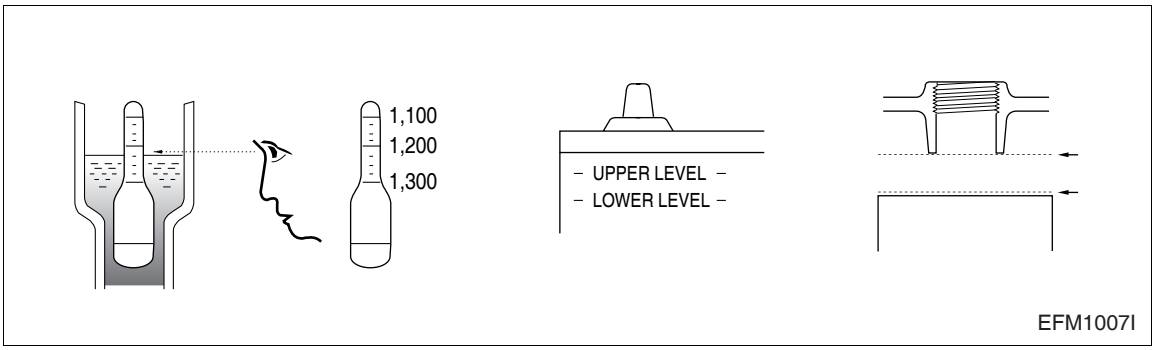

2.2.30. Air removal of fuel system

The suction room of fuel injection pump has the function of air removal continuously during the operation through a relief valve.

Iin case that the suction room lacks fuel at all, for instance, in case of new installation of injection pump, after loosening the air removing screws of cartridge filter respectively, remove the air by operating the manual pump of fuel supply pump until bubble will disappear.

2.2.31. Fuel supply pump

Every time of engine oil replacement, the fuel strainer installed at the fuel supply pump should be removed and cleaned.

2.2.32. Supercharger

The supercharger needs not arty special equipment

Every time of engine replacement, a leakage or clogging of oil pipes should be inspected. Air cleaner should be maintained carefully for nut or foreign material not to get in. Periodic inspection should be applied on the compressed air and exhaust gas pipes, For leaking air will bring the overheat engine, an immediate repair must be done.

During the operation that is surrounded by the dust and oil mixed air, frequent cleaning must be done on the impellers. Tear down the impeller casing (attention: be careful not to bend) and must clean with non-acid solvent solution. If necessary, use plastic scraper If impeller is severely polluted, dip the impeller into solution and may be better to clean it with stiff brush.

Then one thing to beware is to dip only impeller part and so do not support by impeller but bearing housing.

https://truckmanualshub.com/

2.2.33. Air cleaner

Air cleaner is mounted on the engine to purify the air for combustion.

The intervals at which the air cleaner requires servicing depend on the specific operating conditions encountered. Clogged air filters may cause black smoke and reduce power.

A check should be made from time to time to see that the fastening elements securing the air cleaner to the intake manifold seal the connection tightly. Any ingress of unfiltered air is liable to cause a high rate of cylinder and piston wear.

2.2.34. Electrical equipment

1) Alternator

The alternator is fitted with integral silicon rectifiers. A transistorized regulator mounted on the alternator body interior limits the alternator voltage. The alternator should not be operated except with the regulator and battery connected in circuit to avoid damage to the rectifier and regulator.

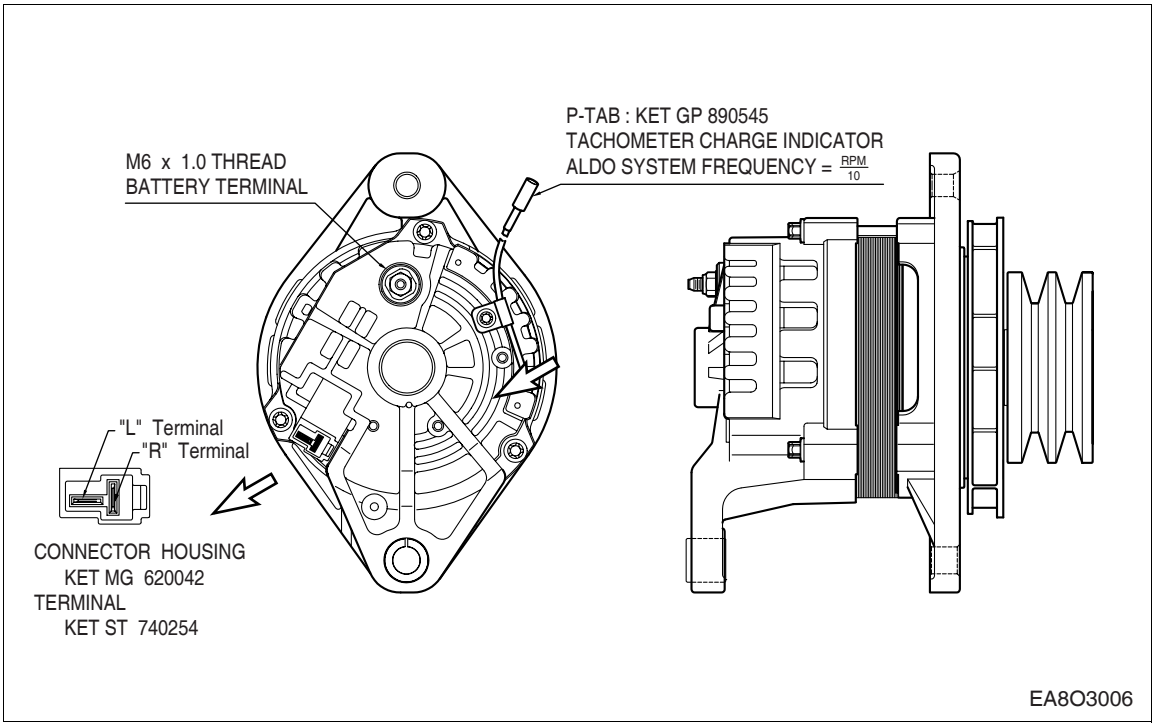

The alternator is maintenance-free, nevertheless, it must be protected against dust and, above all, against moisture and water.

Operate the alternator according to the instructions given in the chapter "Commissioning and operation".

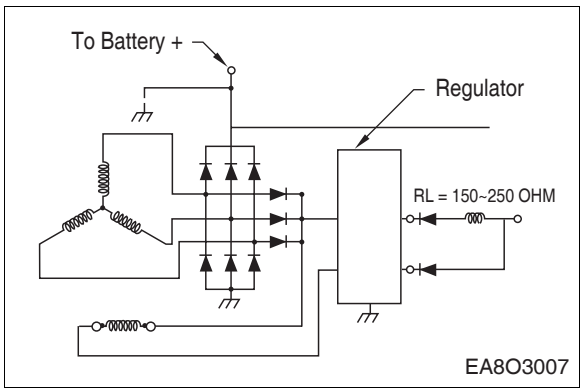

https://truckmanualshub.com/

2) Starter motor

The sliding-gear starter motor is flanged to the rear of the flywheel housing on the left-hand side.

As part of every engine overhaul, the starter pinion and ring gear should be cleaned with a brush dipped in fuel and then a coat of grease should be applied again.

Always protect starter motor against moisture.

WARNING :

Always disconnect the battery earth cable before starting work on theelectrical system.

Connect up the earth cable last, as there is of otherwise a rise of short-circuits.

2.2.35. Starting motor

- In case of engine maintenance, clean pinion and ring gear thoroughly putting in the fuel, and coat them with grease.

  Also, In case of washing car and so forth, inspect the wiring state being careful for not to get.

https://truckmanualshub.com/

2.3. Troubleshooting

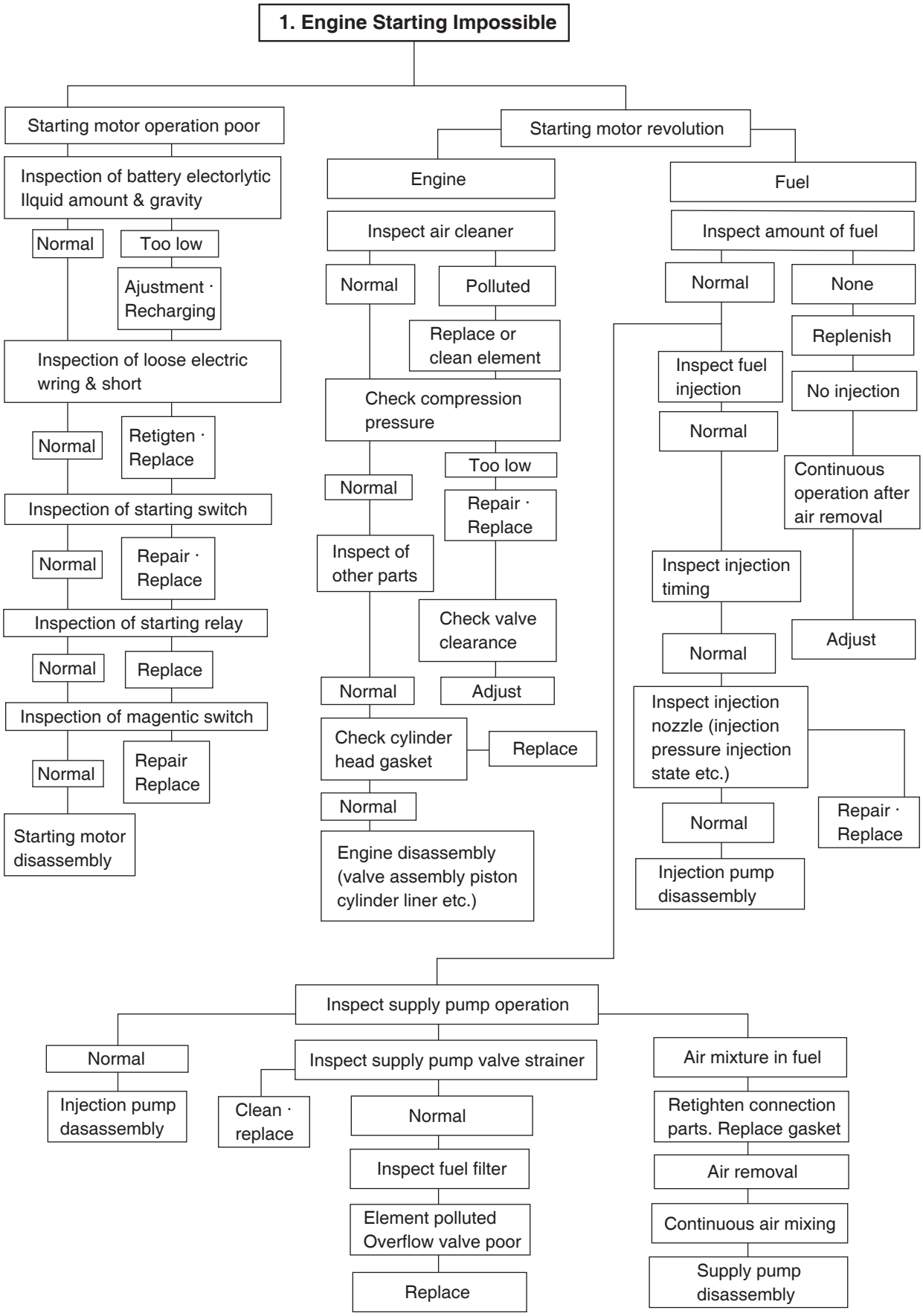

https://truckmanualshub.com/

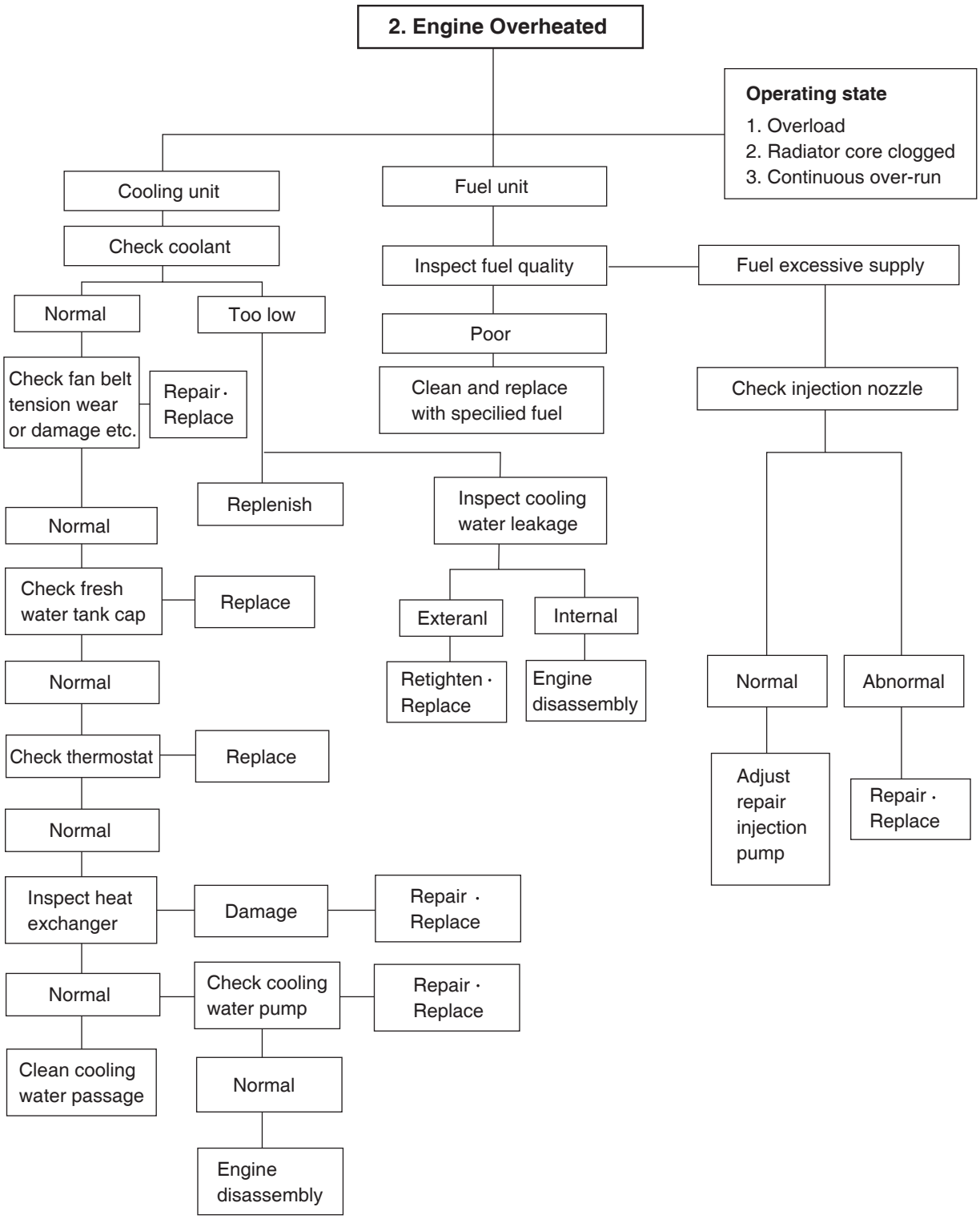

https://truckmanualshub.com/

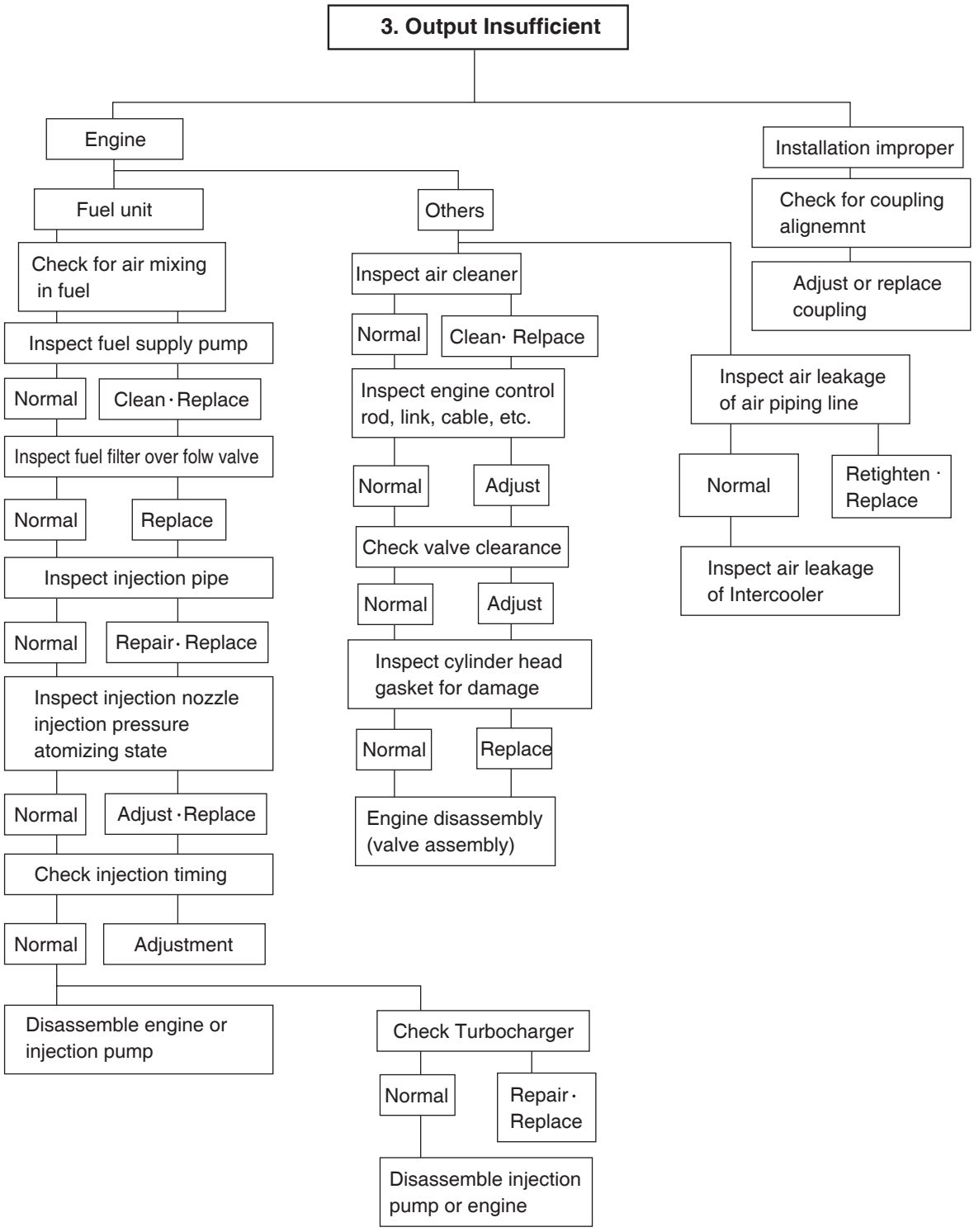

https://truckmanualshub.com/

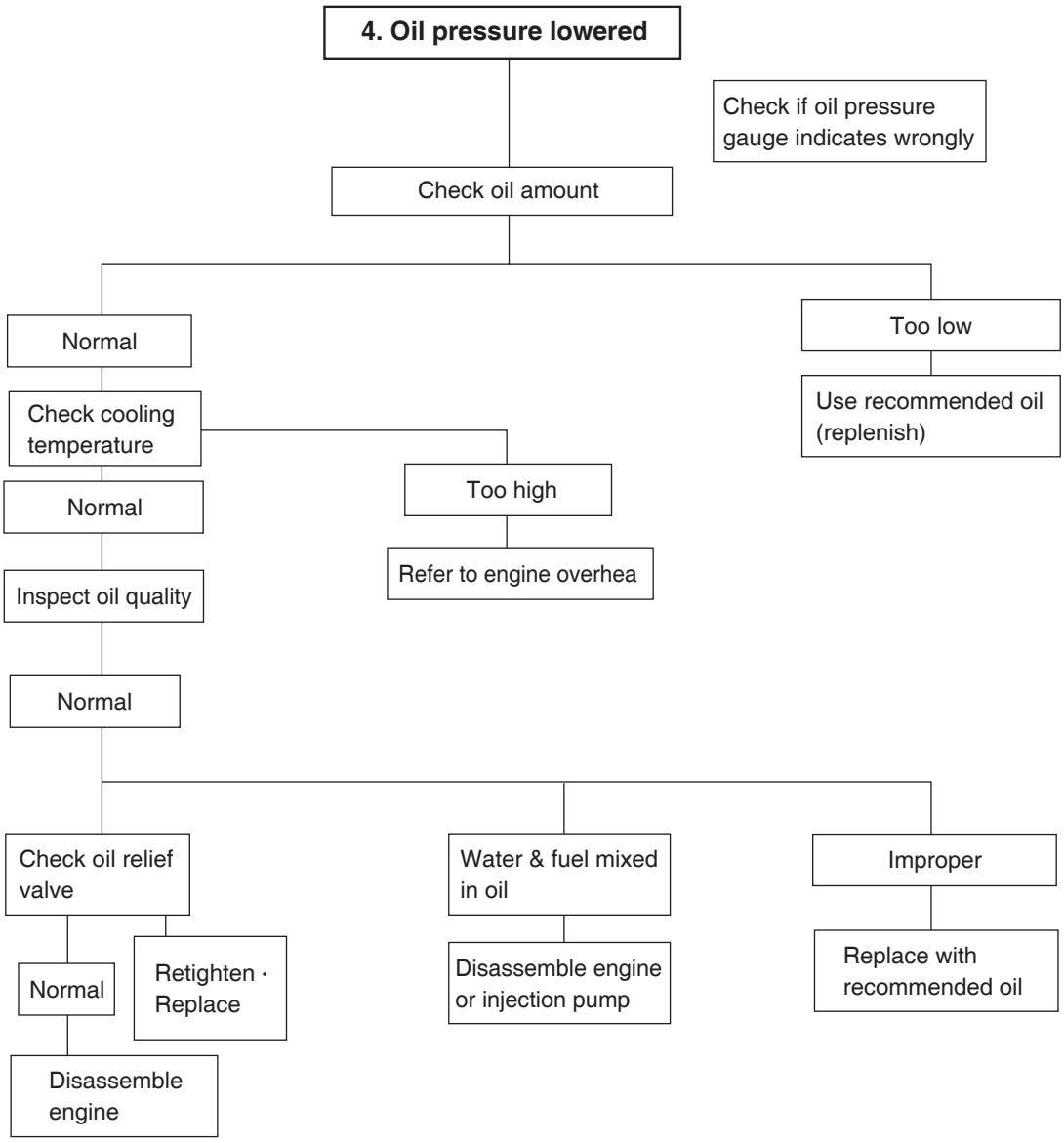

https://truckmanualshub.com/

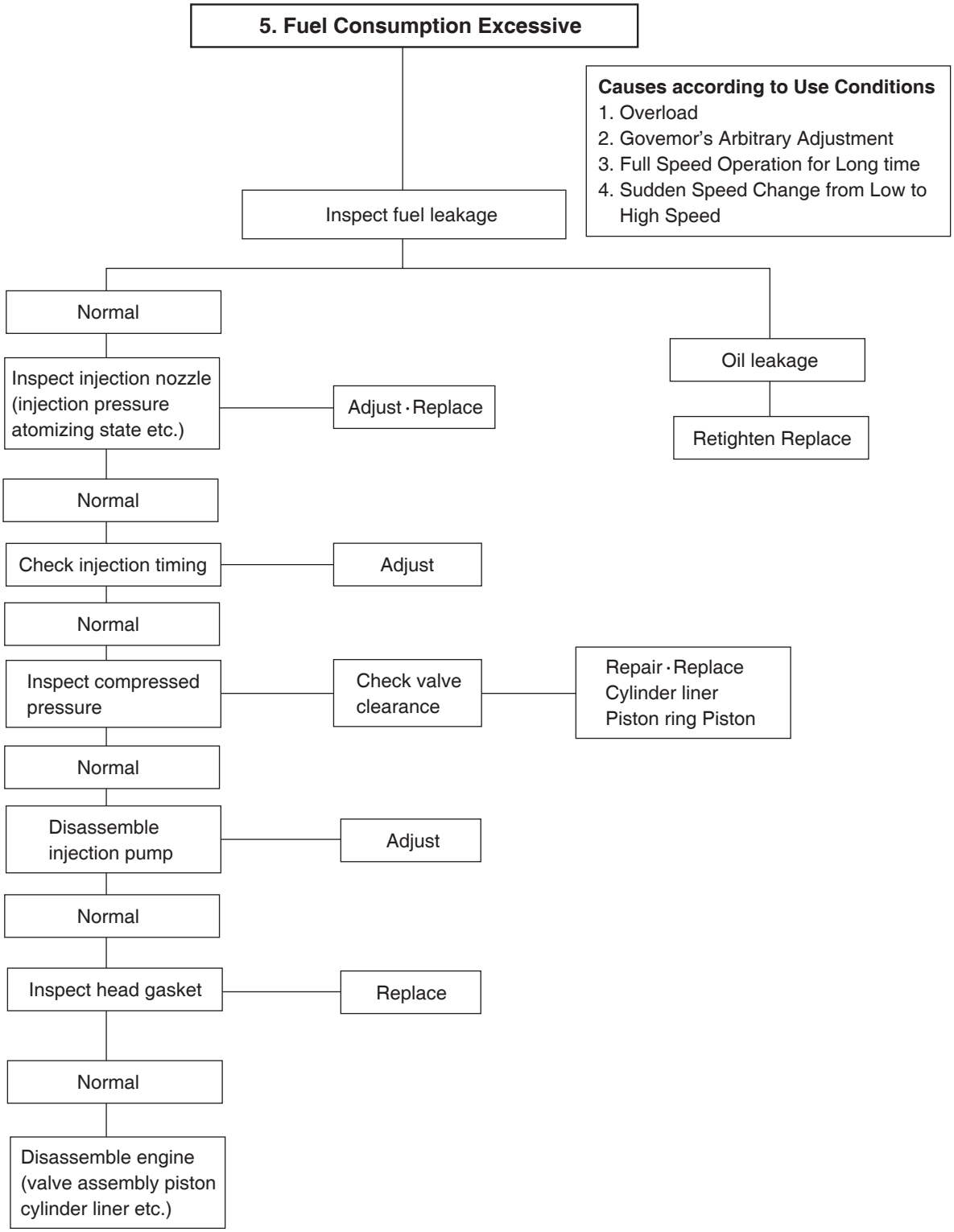

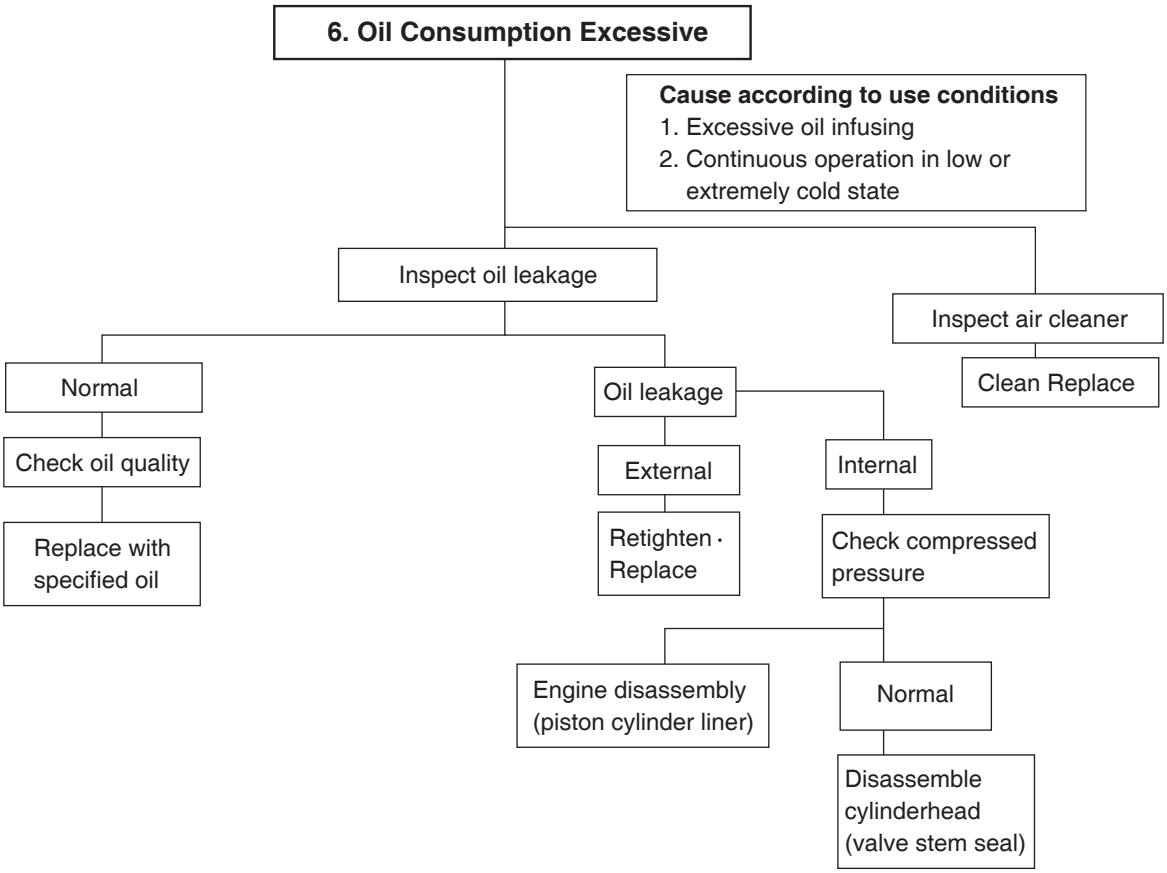
6. Oil Consumption Excessive
Cause according to use conditions
1. Excessive oil infusing
2. Continuous operation in low or extremely cold state
Inspect oil leakage
Inspect air cleaner
Clean Replace
Normal
Check oil quality
Replace with specified oil
Oil leakage
External
Retighten · Replace
Internal
Check compressed pressure
Engine disassembly (piston cylinder liner)
Normal
Disassemble cylinderhead (valve stem seal)

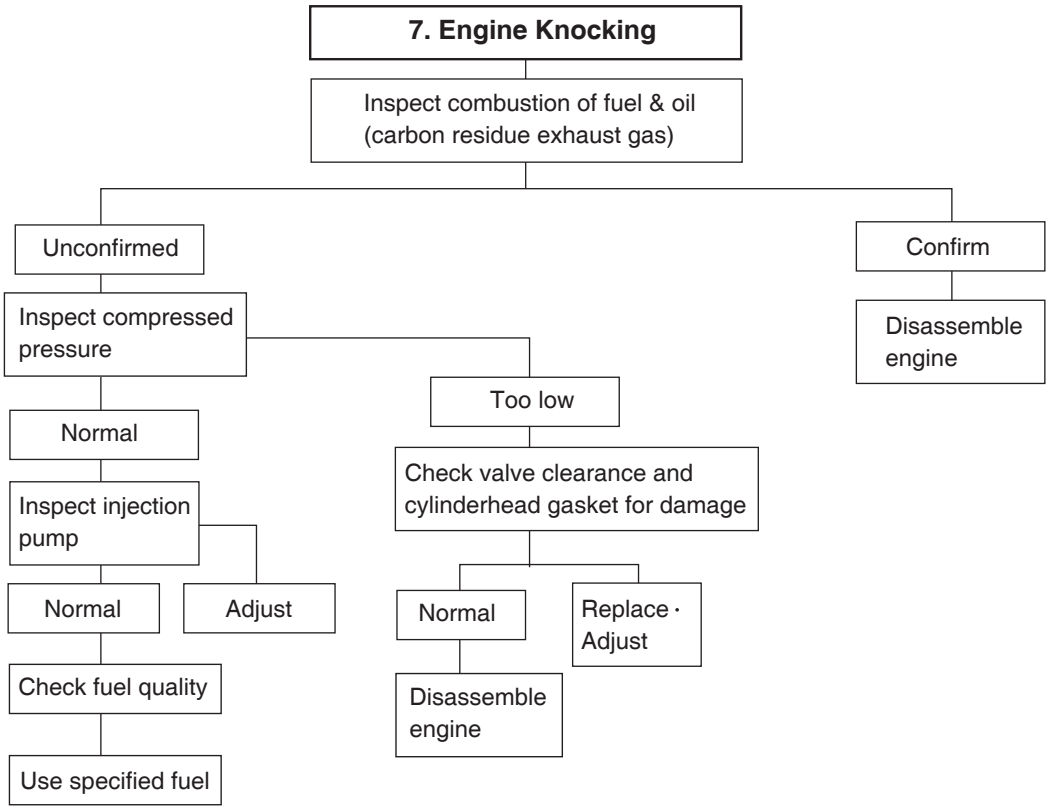
7. Engine Knocking
Inspect combustion of fuel & oil (carbon residue exhaust gas)
Unconfirmed
Confirm
Disassemble engine
Inspect compressed pressure
Too low
Normal
Inspect injection pump
Normal
Adjust
Check fuel quality
Use specified fuel
Check valve clearance and cylinderhead gasket for damage
Normal
Replace · Adjust
Disassemble engine

https://truckmanualshub.com/

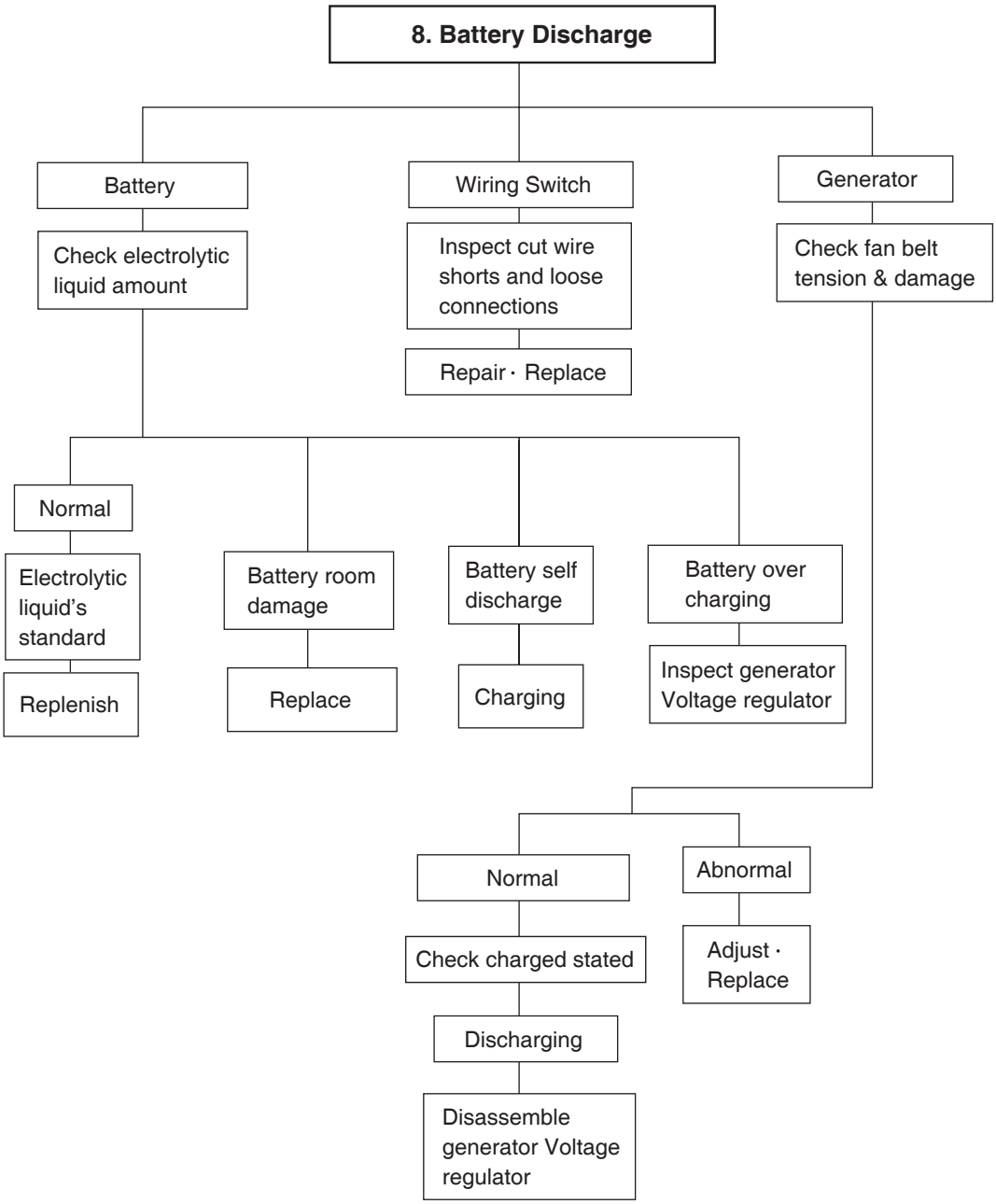

Condition	Causes	Remedies
1) Starting difficult		
(1) Compression pressure	● Valve's poor shut, stem distortion	Repair or replace
	● Valve spring damage	Replace valve spring
	● Cylinder head gasket's leak	Replace gasket
	● Wear of piston, piston ring or liner	Adjust
2) Idle operation abnormal	● Injection timing incorrect	Adjust
	● Air mixing at injection pump	Remove air
3) Engine output insufficient		
(1) Continuous output insufficient	● Valve clearance incorrect	Adjust
	● Valve tightness poor	Repair
	● Cylinder head gasket's leak	Replace gasket
	● Wear, stick, damage of piston ring	Replace piston ring
	● Injection timing incorrect	Adjust
	● Fuel injection amount insufficient	Adjust injection pump
	● Nozzle injection pressure improper or stuck	Adjust or replace
	● Supply pump's function lowered	Repair or replace
	● Fuel pipe system clogged	Repair
	● Air suction amount insufficient	Clean or replace air cleaner
	● Supercharger poor	Repair or replace
(2) Output insufficient when in acceleration	● Compression pressure insufficient	Disassemble engine
	● Injection timing incorrect	Adjust
	● Fuel injection amount insufficient	Adjust injection pump
	● Injection pump timer's function insufficient	Repair or replace
	● Nozzle infection pressure, infection angle improper	Repair, replace
	● Supply pump's function lowered	Repair or replace
	● Air intake amount insufficient	Clean or replace air cleaner
4) Overheating		
	● Engine oil insufficient or poor	Replenish or replace
	● Cooling water insufficient	Replenish or replace
	● Fan belt loosened, worn, damaged	Adjust or replace
	● Cooling water pump's function lowered	Repair or replace
	● Water temp. regulator's operation poor	Replace
	● Valve clearance incorrect	Adjust
	● Exhaust system's resistance increased	Clean or replace

https://truckmanualshub.com/

Condition	Causes	Remedies
5) Engine noisy	For noises arise compositely such as rotating parts, lapping parts etc., there is necessity to search the cause of noises accurately.	
(1) Crankshaft	● As the wear of bearing or crankshaft progress, the oil clearances increase.	Replace bearing & grind crankshaft
	● Lopsided wear of crankshaft	Grind or replace
	● Oil supply insufficient due to oil passage clogging	Clean oil passage
	● Stuck bearing	Replace bearing & Grind
(2) Con rod and Con rod bearing	● Lopsided wear of con rod bearing	Replace bearing
	● Lopsided wear of crank pin	Grind crankshaft
	● Connecting rod distortion	Repair or replace
	● Stuck bearing	Replace & grind crankshaft
	● Oil supply insufficiency as clogging at oil passage progresses	Clean oil passage
(3) Piston, piston pin & piston ring	● Piston clearance increase as the wear of piston and piston ring progresses	Replace piston & piston ring
	● Wear of piston or piston pin	Replace
	● Piston stuck	Replace piston
	● Piston insertion poor	Replace piston
	● Piston ring damaged	Replace piston
(4) Others	● Wear of crankshaft, thrust bearing	Replace thrust bearing
	● Camshaft end play increased	Replace thrust plate
	● Idle gear end play increased	Replace thrust washer
	● Timing gear backlash excessive	Repair or replace
	● Valve clearance excessive	Adjust valve clearance
	● Abnormal wear of tappet, cam	Replace tappet, cam
	● Supercharger inner part damaged	Repair or replace
6) Fuel Consumption Excessive	● Injection timing incorrect	Adjust
	● Fuel injection amount excessive	Adjust injection pump

https://truckmanualshub.com/

Condition	Causes	Remedies
7) Oil Consumption Excessive		
(1) Oil level elevated	● Clearance between cylinder liner & piston	Replace
	● Wear of piston ring, ring groove	Replace piston, piston ring
	● Piston ring's damage, stick, wear	Replace piston ring
	● Piston ring opening's disposition improper	Correct position
	● Piston skirt part damaged or abnormal wear	Replace piston
	● Oil ring's oil return hole clogged	Replace piston ring
	● Oil ring's contact poor	Replace piston ring
(2) Oil level lowered	● Looseness of valve stem & guide	Replace in set
	● Wear of valve stem seal	Replace seal
	● Cylinder head gasket's leak	Replace gasket
(3) Oil leak	● Looseness of connection parts	Replace gasket, repair
	● Various part's packing poor	Replace packing
	● Oil seal poor	Replace oil seal

https://truckmanualshub.com/

2.4. Operation Tip

2.4.1. Periodic Inspection cycle

○ : Check & adjust ● : Replace

Inspection		Daily	Inspection time (hours)					Remark
			50	200	600	800	1,200	
Cooling System	Check for leakage (hoses, clamp)	○						
	Check the water level	○						
	Change the coolant water						●	
	Adjust the V-belt tension	○						Every 2,000 hrs
	Clean the radiator						○	
Lubrication System	Check for leakage	○						
	Check the oil level gauge	○						
	Change the lubricating oil		● 1st			○		
	Replace the oil filter cartridge		● 1st			○		
Intake & Exhaust System	Check the leakage for intercooler (hoses, clamp)	○						
	Clean and change the air cleaner element			○ clean	●			
	Clean the inter-cooler air fins				○			
	Clean the turbo-charger							Every 2,000 hrs
Fuel System	Check the leakage fuel line	○						
	Clean the fuel strainer of fuel feed pump						○	
	Remove sediment from fuel tank						○	
	Drain the water in separator			○				
	Replace the fuel filter element						●	
	Check fuel Injection timing			○				When necessary
	Check the injection nozzles			○				When necessary
Engine Adjust	Check the state of exhaust gas	○						
	Check the battery charging	○						
	Check the compression pressure						○	When necessary
	Adjust Intake / Exhaust valve clearance		○ 1st					When necessary

https://truckmanualshub.com/

3. Disassembly and Reassembly of Major Components

3.1. Engine Disassembly

- Engine part's disassembly procedures are as follows;
- For the various tool storage before disassembly and parts storage after disassembly, the shelf for parts is prepared.
- At the time of disassembly and reassembly, do the work with the naked and clean hand, and also the working place must be maintained clean.
- The torn parts after disassembly must be kept not to collide each other.
- In disassembling, torn parts should be laid in disassembled order.

3.1.1. Oil level gauge

- Take out the oil level gauge

3.1.2. Engine oil

- Remove an oil drain cock from the oil pan, and let engine oil discharge into the prepared vessel.

3.1.3. Cooling water

- Remove the cooling water drain plug from the cylinder block and oil cooler, various pipes, etc. and let the cooling water discharge into the prepared vessel.

3.1.4. Cooling fan

- Remove fan fixing bolts, then take off the cooling fan.

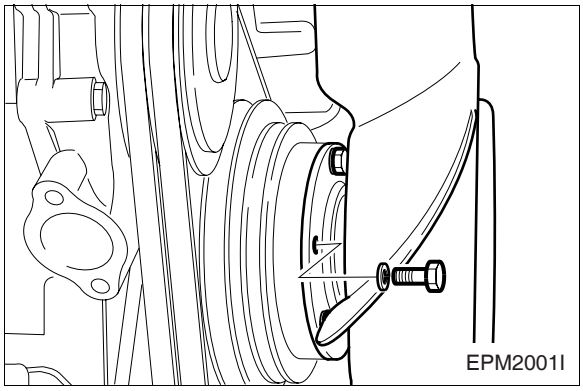

3.1.5. V-belt

- Loosen the V-belt tension adjusting bolts, and remove the V-belt.

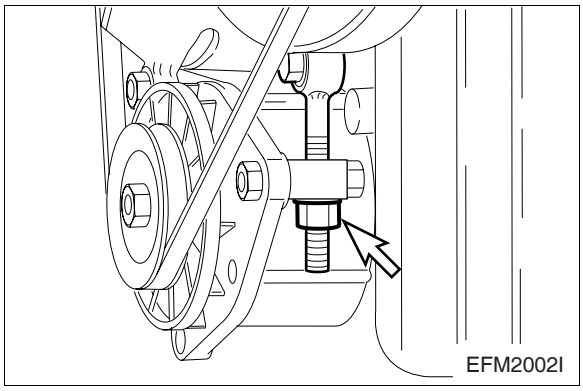

https://truckmanualshub.com/

3.1.6. Alternator

- Remove the supporting guide piece for installing the alternator and the bracket bolts.
- Disassemble the alternator.

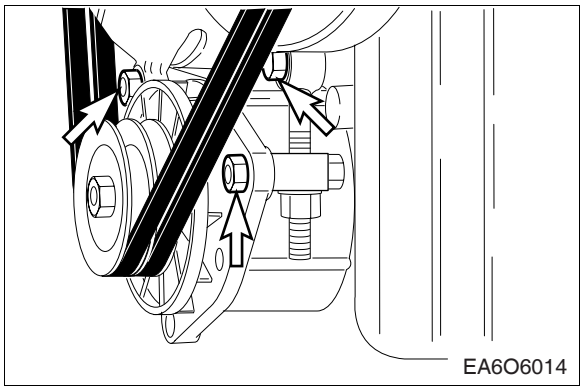

3.1.7. Vibration damper

- Remove the fixing bolts for crankshaft pulley in reverse order of assembling and disassemble the crankshaft pulley and vibration damper.

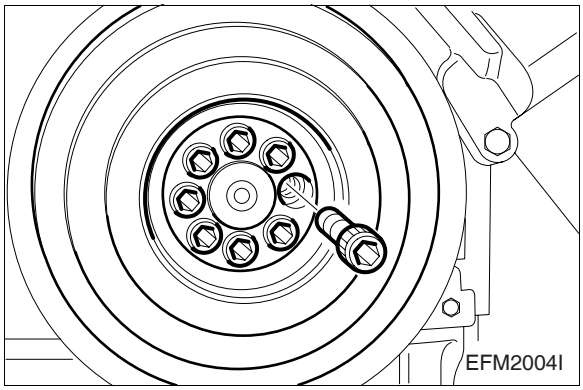

3.1.8. Oil filter assembly

- Disassemble the oil filter cartridge with filter wrench by means of a filter wrench.
- Do not use again the cartridge removed after use.

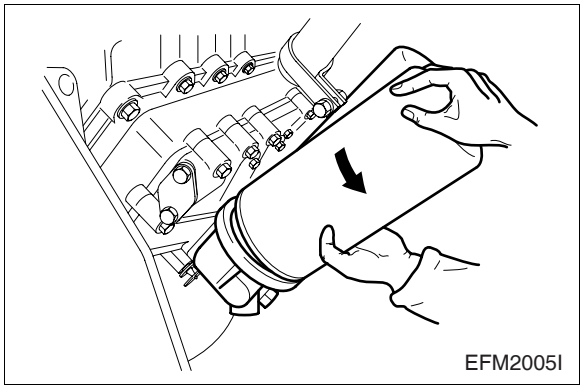

- Remove the oil filter head fixing bolts and disassemble the filter head.

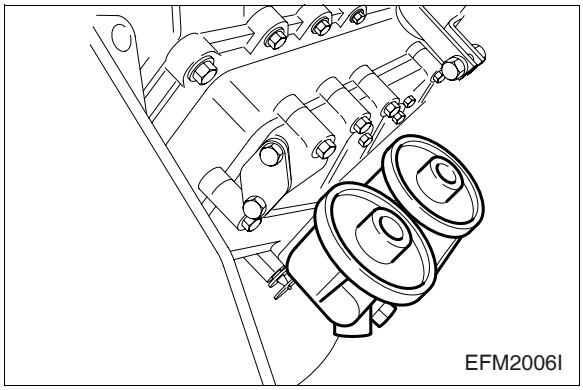

https://truckmanualshub.com/

3.1.9. Cooling water pump

- Loosen the various hose clamps for the connections.
- Remove the cooling water discharging pipe and disassemble the thermostat.
- Remove the cooling water pump fixing bolts and disassemble the cooling water pump.

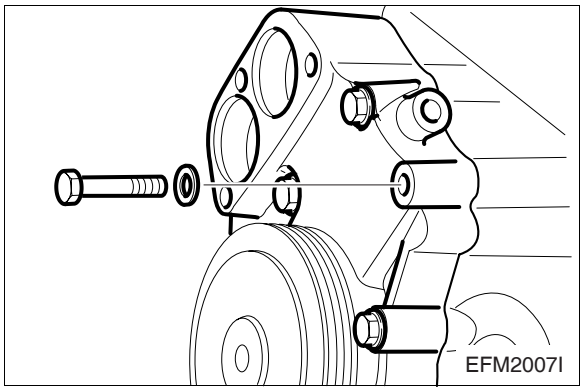

3.1.10. Starting motor

- Remove the starting motor fixing nuts and disassemble the starting motor.

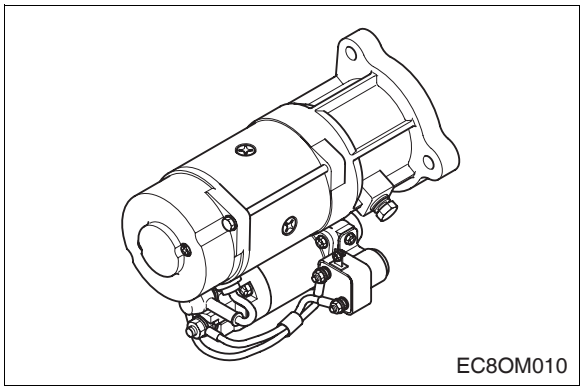

3.1.11. Fuel filter

- Disassemble the fuel hose for the fuel supply and suction.
- Remove the fuel filter fixing bolts and disassemble the filter.

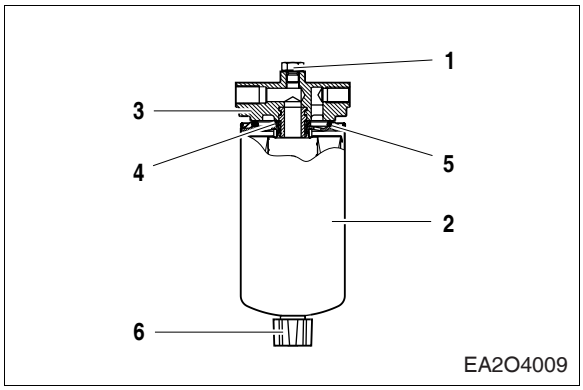

3.1.12. Injection pipe

- Disassemble various fuel pipe and hose.
- Disassemble the injection pipe from the nozzle holder and fuel injection pump.

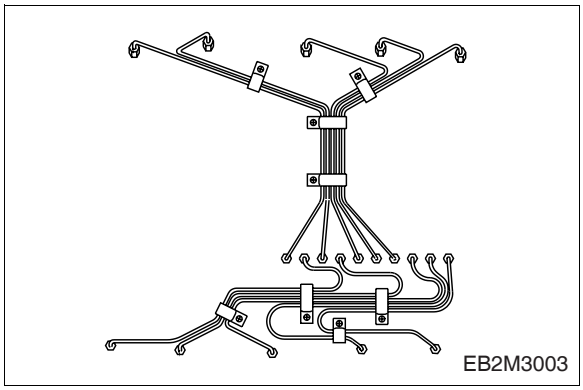

https://truckmanualshub.com/

3.1.13. Oil cooler assembly

- By removing the plug screw of cooling water discharge port, the cooling water is discharged.

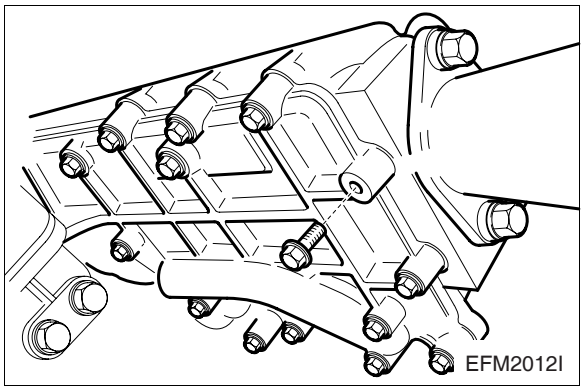

- Remove the oil cooler cover fixing bolts and disassemble the oil cooler.
- By removing the cooler housing fixing bolts and disassemble the oil cooler housing from the cylinder block.

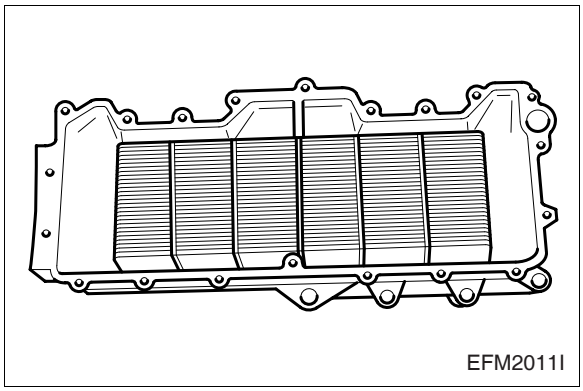

3.1.14. Turbo charger

- Loosen the hose clamp for connecting the intake stake and tear down the air intake stake.
- Loosen the clamp for connecting the air intake manifold.
- Remove the hollow screws of pipes for turbocharger lubrication and its discharge, and tear the pipes down.
- Remove the turbocharger fixing nuts and separate the turbocharger from the exhaust manifold.

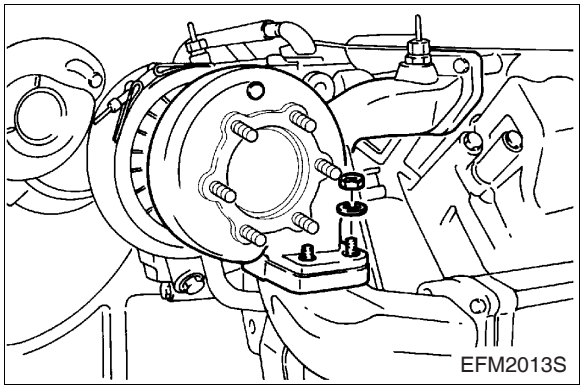

https://truckmanualshub.com/

3.1.15. Intercooler

- Tear down the various hoses and air pipes from the inter cooler.
- Remove the intercooler fixing bolts and tear it down.

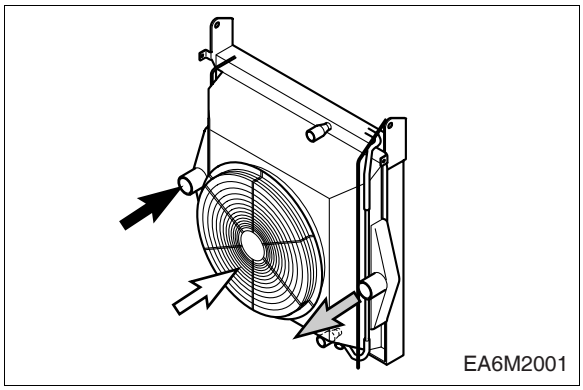

3.1.16. Exhaust manifold

- Remove the exhaust manifold fixing bolts and tear the manifold from the cylinder head.

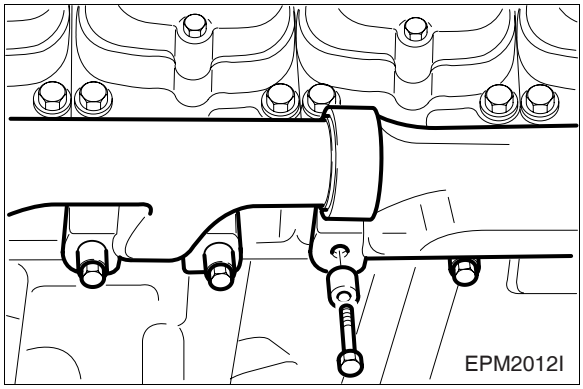

3.1.17. Intake manifold

- Remove the manifold fixing bolts and tear the manifold down from the cylinder head.

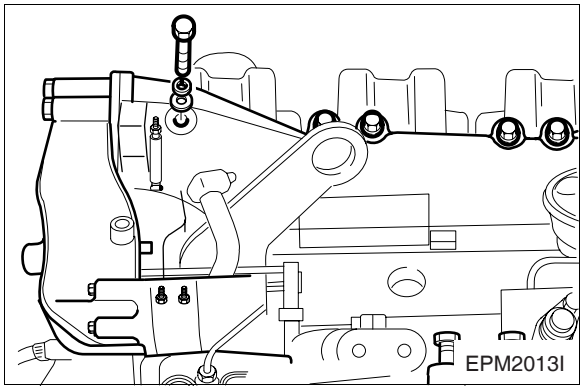

3.1.18. Flywheel housing cover

- Separate the side cover.
- Disassemble the flywheel housing cover.

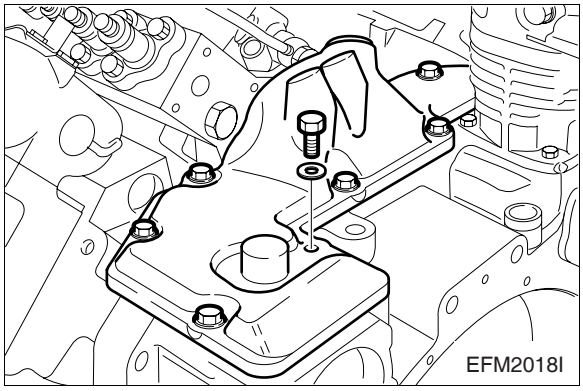

https://truckmanualshub.com/

3.1.19. Fuel injection pump

- Remove the oil hoses for lubrication and the fuel hoses.
- Remove the fixing bolts of fuel injection pump and take out the fuel Injection pump.

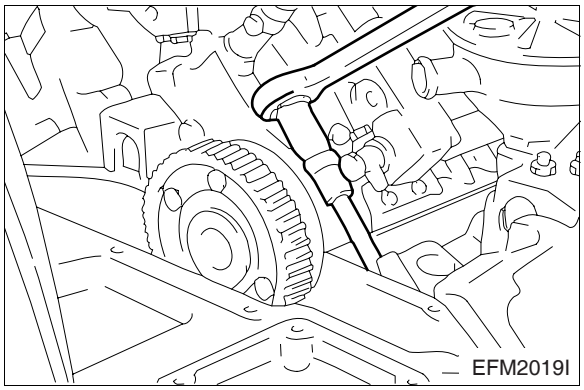

3.1.20. Cylinder head cover

- Remove the fixing bolts and tear the cylinder head cover down.

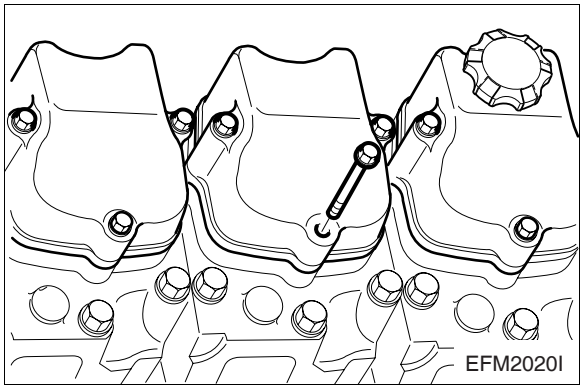

3.1.21. Nozzle holder

- By means of a special tool, loosen the nozzle holder assembly and take it out.

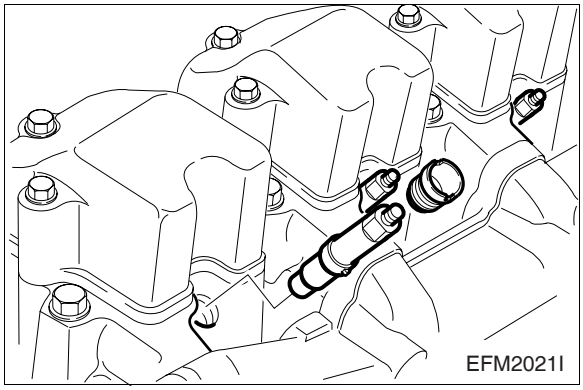

3.1.22. Rocker arm

- Remove the rocker arm bracket fixing bolts and take the rocker arm assembly out.
- Pull out the push rod.

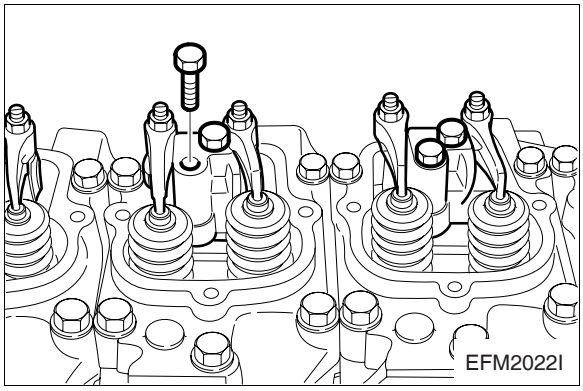

https://truckmanualshub.com/

3.1.23. Cylinder head

- Loosen the cylinder head fixing bolts in the reverse order of assembling, and remove them all and then take the cylinder head out.
- Remove the cylinder head gasket and scrap it.
- Eliminate the residue from the cylinder head face and cylinder block face.

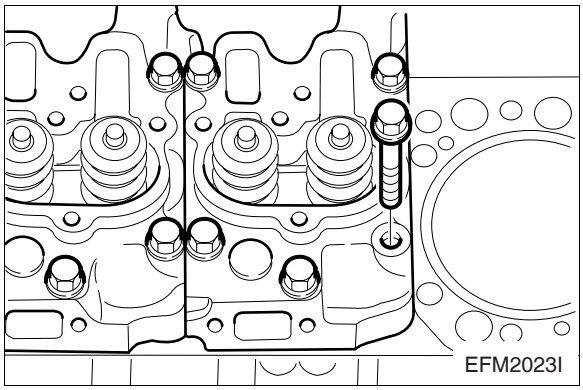

NOTE :
Be careful not to damage the cylinder head face where its gasket contacts.

3.1.24. Oil pan

- Remove the oil pan fixing bolts and separate the pan.
- Remove the oil pan gasket and scrap it.

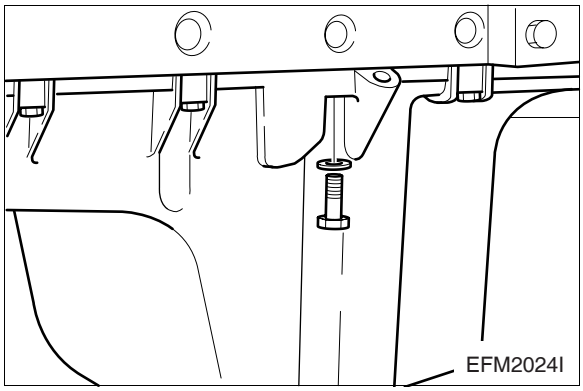

3.1.25. Oil pump

- Remove the oil suction pipe fixing bolts and tear them down.
- Remove the oil relief valve fixing bolts and take them out.
- Remove the oil pump fixing bolts and separate it.

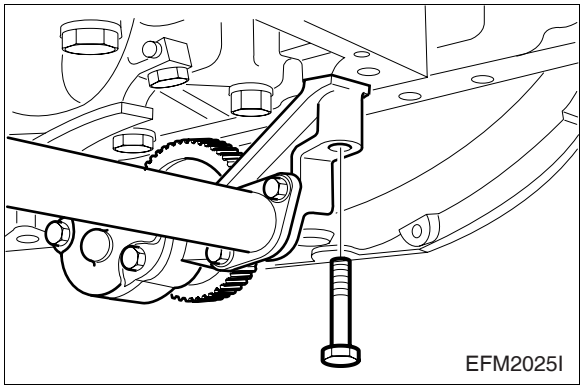

https://truckmanualshub.com/

3.1.26. Piston

- Remove the connecting rod cap bolts in the reverse order of assembling and follow the similar method as in the cylinder head bolt removal.
- Tapping the upper and lower connecting rod caps lightly with an urethane hammer, separate them and take the bearings out.
- By pushing the piston assembly with a wooden bar toward the cylinder head's direction remove the piston.

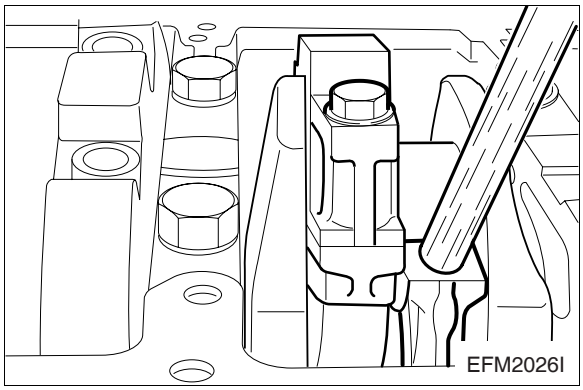
EFM2026I

NOTE :
Be careful for the removed pistons not to collide each other or with the other parts. At the storage of pistons, maintain them in the order of cylinders.(In order for connecting rod caps not to mix one another, temporarily assemble them to the corresponding connecting rods.)

3.1.27. Front oil seal holder

- Remove the oil seal holder fixing bolts and tear down.
- Remove the oil seal and gasket from the oil seal holder and scrap them.

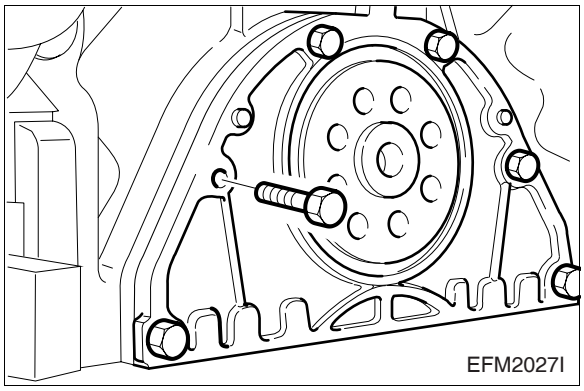
EFM2027I

3.1.28. Flywheel

- Remove the flywheel fixing bolts in the order of disassembling and remove the flywheel.

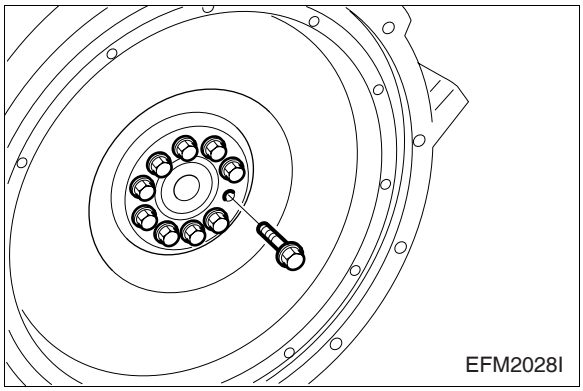
EFM2028I

https://truckmanualshub.com/

- Remove the flywheel ring gear.
  - Heat the ring gear evenly with a gas burner (up to 200 °C) to invite volumetric expansion.
  - Tapping around the edges of the ring gear with a hammer and brass bar to remove it.

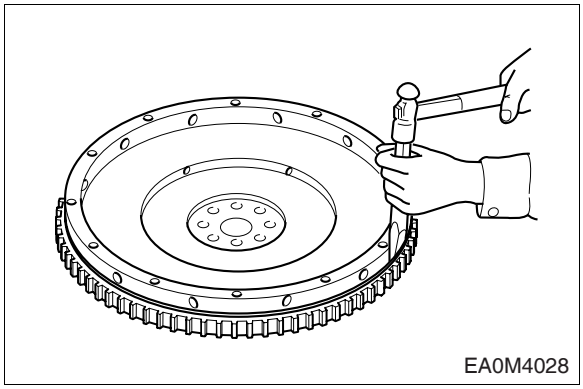

CAUTION :
Do not damage the flywheel.

3.1.29. Flywheel housing

- Remove the flywheel housing fixing bolts and take them out.
- Remove the oil seal from the flywheel housing.

3.1.30. Crankshaft

- Remove the bolts from bearing caps.
- Remove the main bearing cap fixing bolts in the order of assembling. (Remove them in /the same way of the cylinder head bolts.)
- Maintain the removed bearing caps in the order of cylinders.
- Temporarily install the bolts at the both side of crankshaft, and lift the shaft with a rope.

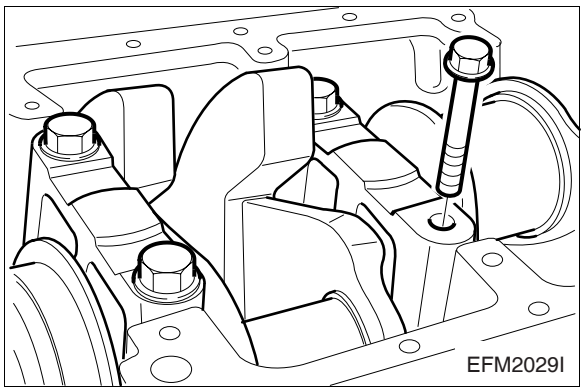

NOTE :
Do not mingle with the metal bearings and bearing caps randomly. To prevent mixing, temporarily assemble the metal bearings to the corresponding bearing caps in turn.

https://truckmanualshub.com/

3.1.31. Camshaft and tappet

- Pull out the tappets from the cylinder block.
- Remove the camshaft being careful not to damage the camshaft and its bearings.

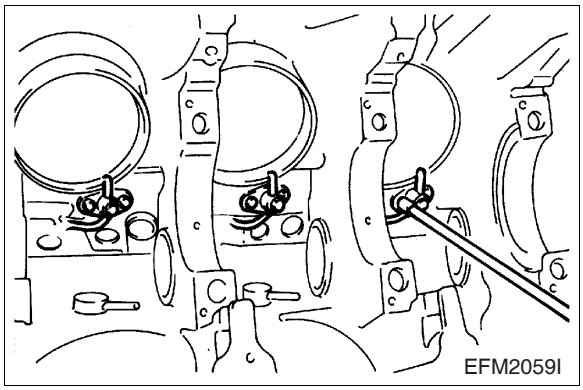

3.1.32. Oil spray nozzle

- Remove the oil injection nozzle fixing bolts and tear down the oil injection nozzles.

3.1.33. Cylinder liner

- By means of a special tool (Extractor), pull out the liner from the cylinder block.

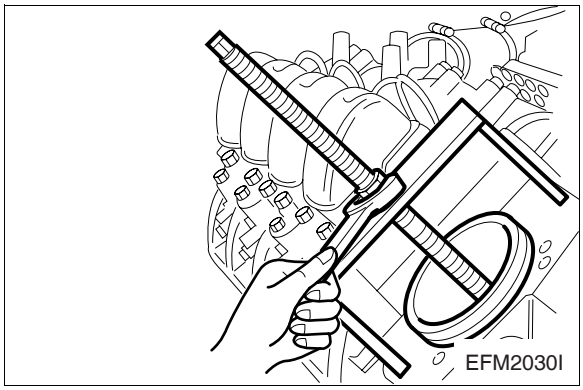

https://truckmanualshub.com/

3.2. Inspection

3.2.1. Cylinder block

1) Clean the cylinder block thoroughly and check a visual inspection for cracks or damage.
2) Replace if cracked or severely damaged, and correct if slightly damaged.
3) Check the oil and water passing lines for restriction or corrosion.
4) Inspect the cylinder block's camshaft bush to any damage and the alignment of oil supply holes and if abnormal or severe wears, replace it.
5) Make a hydraulic test to check for any cracks or air leaks.

Hydraulic test :

Stop up each outlet port of water and oil passages in the cylinder block, apply air pressure of about 5 kg/cm² against the inlet ports, then immerse the cylinder block in water for about 1 minute to check any leaks. (Water temperature : 70 °C)

3.2.2. Cylinder liner measurement

- Assemble the cylinder liner at the cylinder block and measure inner diameter at upper, middle, lower that is, 3 steps by 45° interval and calculate the average values after eliminating the maximum and minimum values.
- If the measured values are very close to the limit value or beyond, replace it

	Standard	Limit
Liner inner diameter	∅127.990 ~ ∅128.010 mm	∅128.16 mm

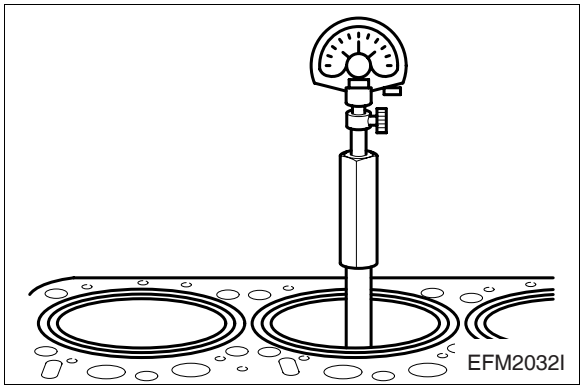

https://truckmanualshub.com/

3.2.3. Cylinder head

- Carefully remove carbon from the lower face of the cylinder head using nonmetallic material to prevent scratching of the valve seat faces.
- Check the entire cylinder head for very fine cracks or damage invisible to ordinary sight using a hydraulic tester or a magnetic flaw detector.

1) Cylinder head disassembly

NOTE :
Be careful for the cylinder head gasket contacting surface of cylinder head not to be damaged.

- Remove the cotter pin pressing the valve spring by means of a special tool.

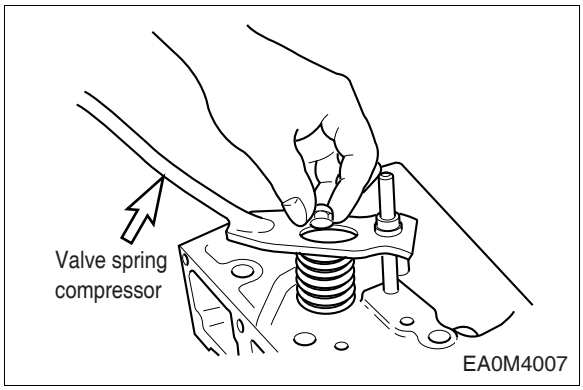

- Take out the valve stem seal.
- Pull out the intake and exhaust valves.
- Remove the valve guides from the combustion room side of cylinder head by means of a special tool.

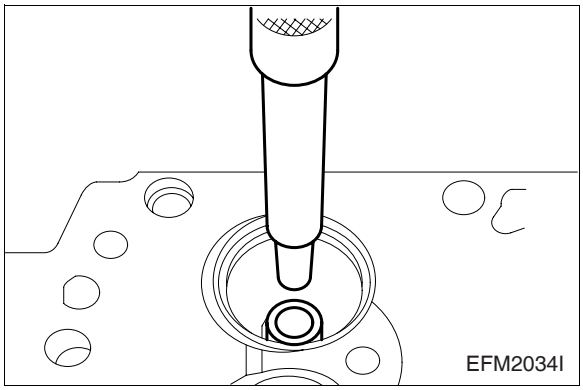

2) Inspection and measurement of cylinder head

a) Inspection of cracks and damage

- Eliminate the carbon residue and gasket piece from the cylinder head lower face thoroughly. Then be careful for the valve seat not to be damaged.
- For cracks or damages to search difficult may be inspected by a hydraulic test or a magnetic powder test. (Hydraulic test is same as for cylinder block.)

https://truckmanualshub.com/

b) Distortion at the lower face

- Measure the amount of distortion using a straight edge and a feeler gauge at six positions as shown in the right figure.

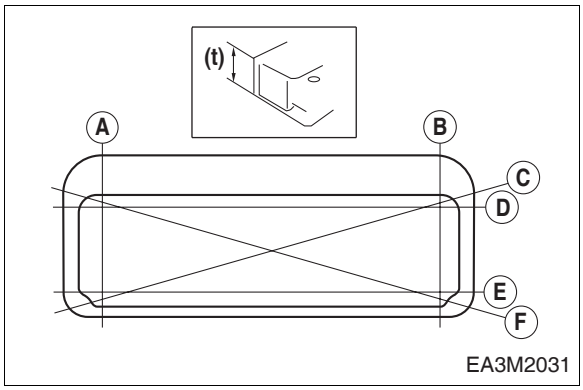

- If the measured value exceeds the standard value, retrace the head with grinding paper of fine grain size to correct such defects.
- If the measured value exceeds the maximum allowable limit, replace the cylinder head.

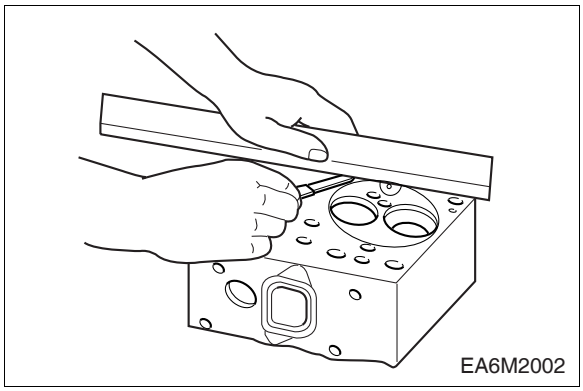

<Lower face warp and height>

	Standard	Limit
Warpage	0.05 mm or less	0.2 mm
Thickness : t (reference)	113.9 ~ 114.0 mm	112.9 mm

3) Inspection and measurement of valve and valve guide

a) Valve

- After cleaning the valves with clean diesel oil, measure the valve stem's outside diameter at upper, middle, and lower to determine the wears and when the wear limit is more than 0.15mm, replace the valves.

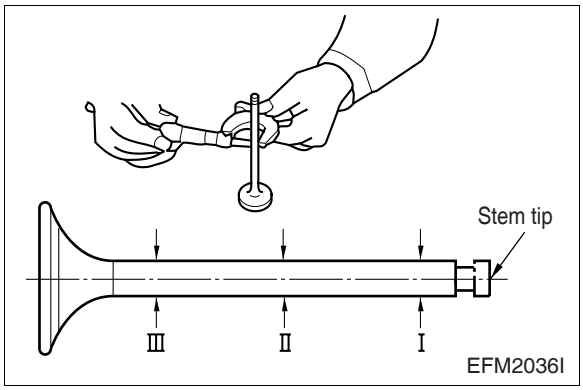

Valve	Standard	Limit
Intake	∅11.969 ~ ∅11.980 mm	∅12.130 mm
Exhaust	∅11.944~ ∅11.955 mm	∅12.105 mm

- Inspect the scratch and wear of valve stem seal contacting face, and if necessary correct with the grinding paper but if severe replace it.
- If valve head thickness (H) becomes less than 1.6 mm for intake and 1.3 mm for exhaust, replace the valve.

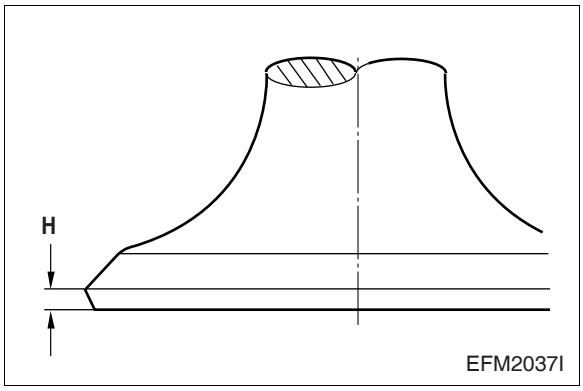

Valve	Standard	Limit
Intake	2.6 ~ 3.0 mm	1.6 mm
Exhaust	1.9 ~ 2.3 mm	1.3 mm

b) Valve guide

- Insert the valve into valve guide and measure the clearance between valve and valve guide by the shaking degree of valve. If the clearance is bigger, measure the valve and then replace the more worn valve guide.
- If the valve guide has already been replaced, measure the center with valve seat if it deviates or not and if abnormal it must be corrected. (Simultaneously be processed when in guide reamer process.)

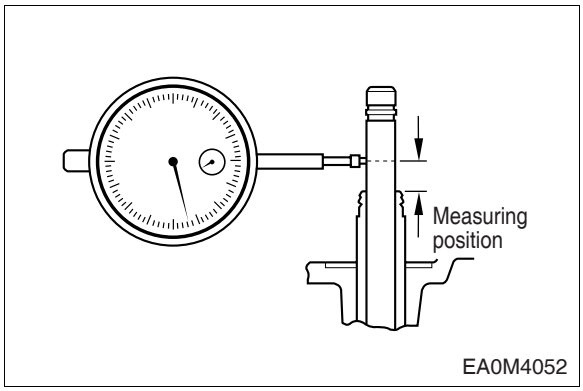

Valve	Standard	Limit
Intake	0.020 ~ 0.049 mm	0.20 mm
Exhaust	0.045 ~ 0.074 mm	0.25 mm

c) Valve seat

- Inspect the damage and wear of valve seat and if necessary replace.
- Valve seat thickness and angle.
  Assemble the valves at the cylinder head and using the measuring instrument from the lower face, measure the projection amount of valve. If the measured value is more than the use limit, replace the valve seat.

https://truckmanualshub.com/

<Valve seat thickness>

Standard	Limit
0.65 ~ 0.95 mm	2.5 mm

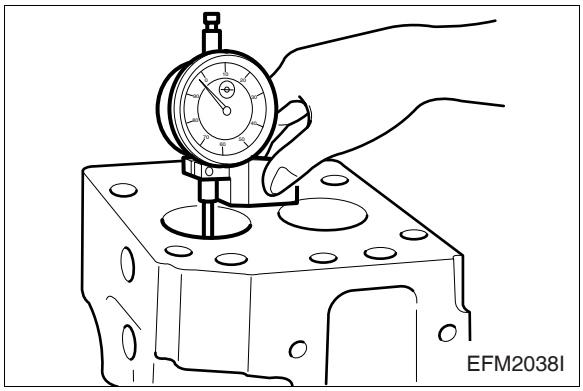

<Valve seat angle>

Intake Valve	30°
Exhaust Valve	45°

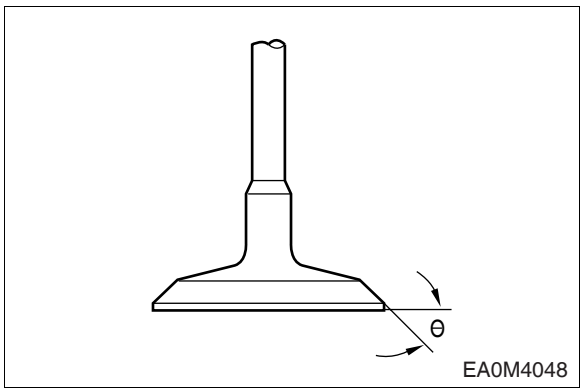

- The disassembly of valve seat can be pulled out by means of a special tool with the arc welding done at two points of valve seat rotating tool or valve seat.
- Regarding the valve seat assembling, shrink the valve seat by putting it in the dry ices for about 1 hour or so, and then press it into the cylinder head by means of a special tool.
- After coating the grinding powder paste on valve head contacting face of valve seat, and after executing a sufficient lapping operation with the rotating and grinding motion of valve, wipe off the grinding agent thoroughly.

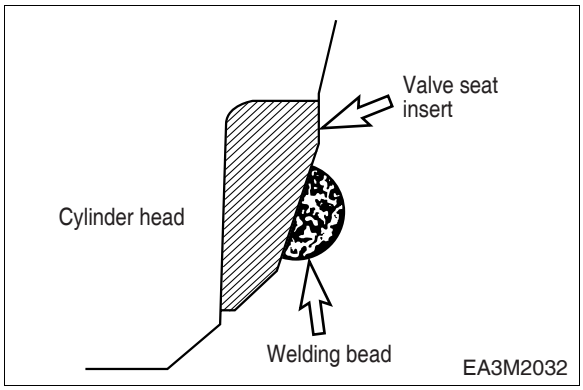

https://truckmanualshub.com/

d) Valve spring

- Inspect the outlook of valve spring and if necessary replace it.
- By means of spring tester, measure the tension and free length.
- Measure the perpendicularity of valve spring.
- In case that the measured value exceeds the limit value, replace it.

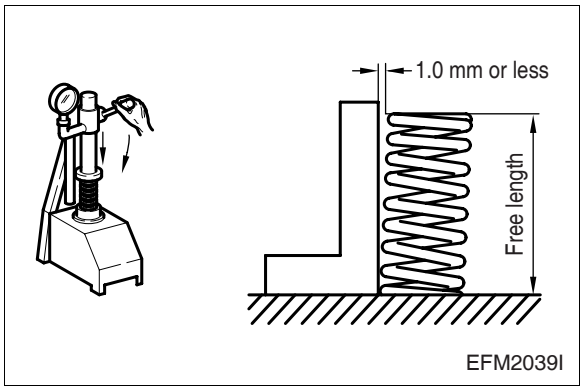

<Perpendicularity regular>

Inside Spring	Free length	65.5 mm
	When given a regular load (15 ~ 17 kg)	46.3 mm
Outside Spring	Free length	64 mm
	When given a regular load (37 ~ 41 kg)	46.3 mm

e) Assembling cylinder head

- Clean the cylinder head thoroughly.
- Coat the valve stems and valve guides with engine oil and assemble the valves.
- Replace the valve stem seals with new ones and insert the stem seals to the valve guides of cylinder head with a special tool. (Be careful for the valve stem seals not to be damaged)
- Install the valve spring washer to valve guide.
- After putting on the inside, outside spring, install the valve spring seat on them.

NOTE :

Install the valve spring seat with “TOP” (painted in yellow) side up.

- Pressing the spring down with a special tool, assemble by inserting the valve cotter.
- After the valve is assembled, inspect the valve tapping it lightly with an urethane hammer if accurate assembling was done.

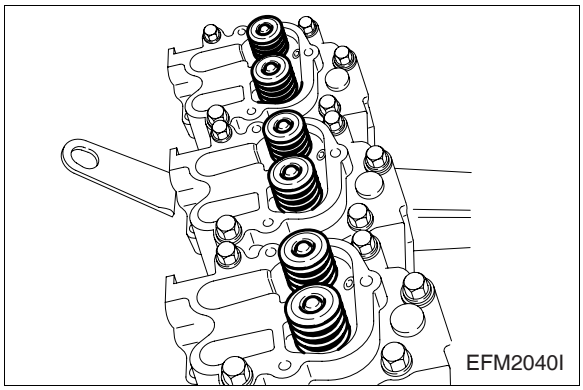

https://truckmanualshub.com/

3.2.4. Rocker arm

1) Cylinder head disassembly

- Remove the snap rings in both ends of rocker arm with a pair of pliers.
- Tear down washer, rocker arm.
- Disassemble the rocker arm bush by means of a press.

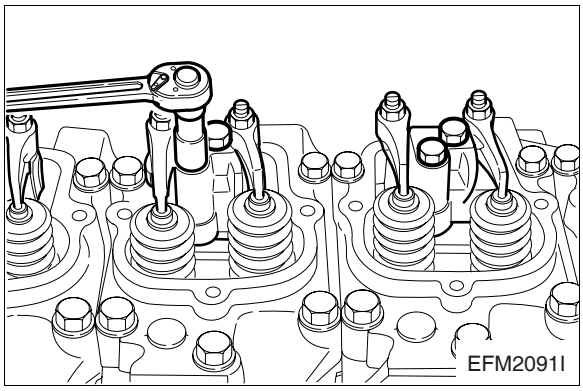

2) Inspection and measurement

a) Rocker arm bracket

(Single unit type with a shaft)

- Measure the outer diameter of rocker arm bracket with outside micrometer at the position that the rocker arm is installed, and in case that it exceeds the limit value, replace.

	Standard	Limit
Bush Inner Dia.	∅25.005 ~ ∅25.035 mm	∅25.055 mm
Shaft outer Dia.	∅24.967 ~ ∅24.990 mm	∅24.837 mm
Clearance	0.015 ~ 0.068 mm	0.25 mm

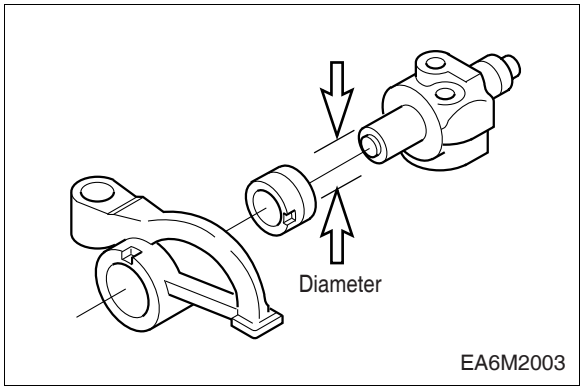

b) Rocker arm

- Inspect the rocker arm surface that contacts with the valve stem for any scratch, step wear and correct the minor degree of wear with an oil stone or the fine grinding paper and replace if they are severe.

https://truckmanualshub.com/

c) Tappet and push rod

- By means of outside micrometer, measure the outer diameter of tappet and replace the severe ones.

	Standard	Limit
Tappet clearance	0.035 ~ 0.077 mm	0.25 mm

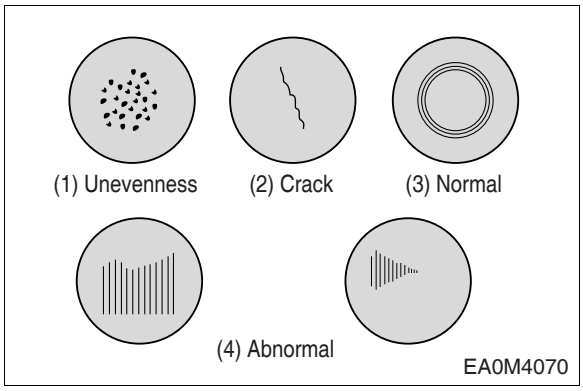

- By inspecting the tappet surface that contacts with the camshaft's cam for any crack and scratch etc., and if the degree is small, correct them with an oil stone or the grinding paper but if severe replace them.
- Place the push rod on the surface plate and rolling it, Inspect the curving degree with a clearance gauge and if abnormal, replace it.

<Run-out>

Limit	0.3 mm or less

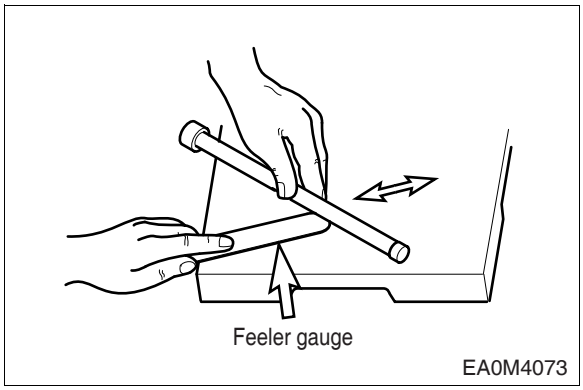

d) Rocker arm reassembling

- Inspect the oil passages of rocker arm and rocker arm bracket for any clogs and reassemble them in the reverse order of disassembling after thorough cleaning.

https://truckmanualshub.com/

3.2.5. Camshaft

1) Axial end play

- Push the camshaft toward the pulley side.
- Place a dial gauge onto the camshaft gear.

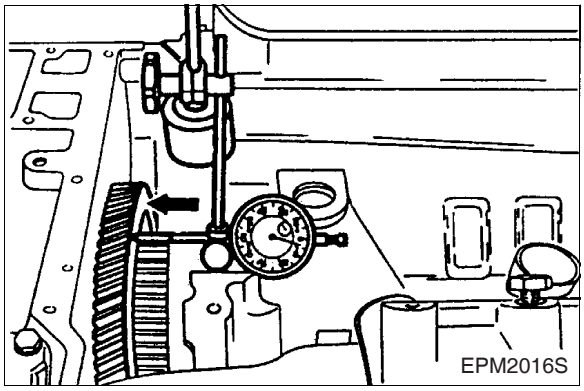

- Measure the camshaft's axial end play, moving the camshaft gear by means of a driver.

Limit	0.2 ~ 0.9 mm

- If excessive end play, assemble it by means of other thrust washer.

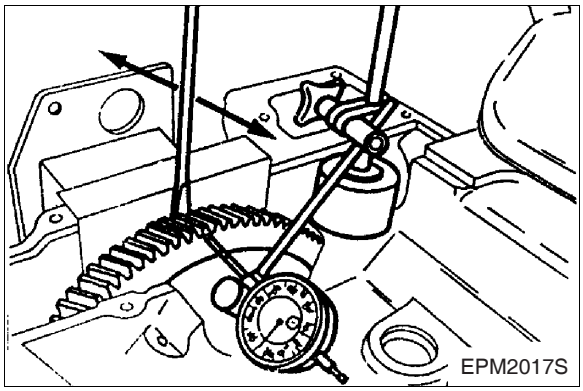

2) Inspection and measurement

- **Visual check**

With inspecting the cam surface for any damage with naked eyes and correct any minor scratches by means of an oil stone grinding and if severe, replace it.

- **Cam lobe height**

Use a micrometer to measure the cam lobe height and journal diameter.
If the measured number is less than the specified limit, the camshaft must replaced.

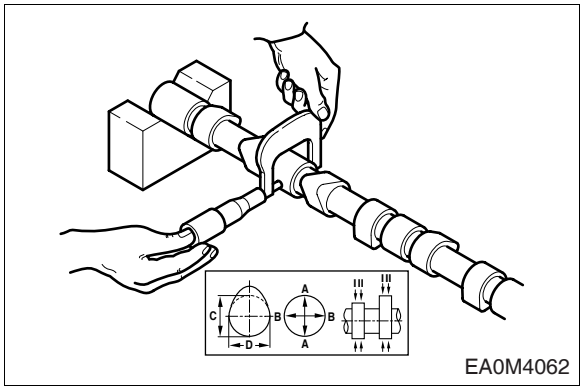

Items		Standard	Limit
Cam lobe height (C)	Intake	56.37 mm	55.17 mm
	Exhaust	56.43 mm	55.11 mm
Cam journal diameter (A,B)		∅69.91 ~ ∅69.94 mm	-

https://truckmanualshub.com/

- **Cam bearing diameter**

Measure the camshaft bush inside diameter with a cylinder gauge and by comparing the inside and outside diameters, replace if abnormal.

Standard	Limit
∅70.077 ~ ∅70.061 mm	∅69.897 mm

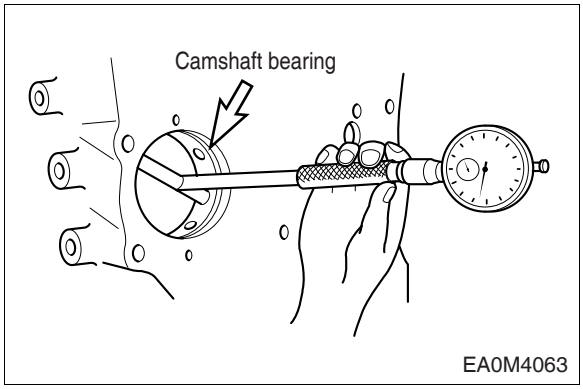

- **Clearance**

between camshaft journal and body

Standard	Limit
0.060 ~ 0.120 mm	0.18 mm

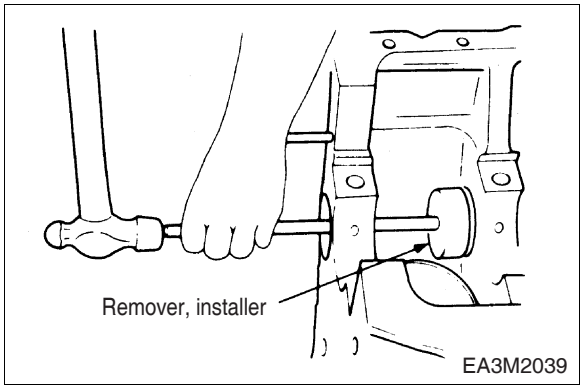

- **Camshaft bearing replacement**

Remover, installer.

- **Camshaft run-out**

With placing the camshaft on the 2ea of V-blocks, and inspect the run-out of the camshaft, adjust or replace the severe one.

Standard	0.1 mm

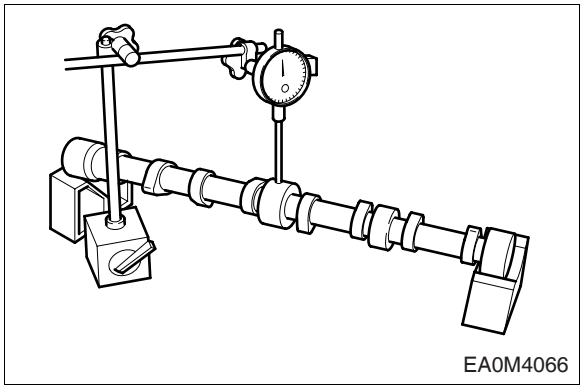

https://truckmanualshub.com/

3.2.6. Crankshaft

1) Inspection and measurement

- Inspect for any scratch or damage with naked eyes, and grind to the undersize according to the damaged degree and use the undersized bearing.
- Inspect for any crack by means of magnetic powder and color check, and replace the cracked ones.

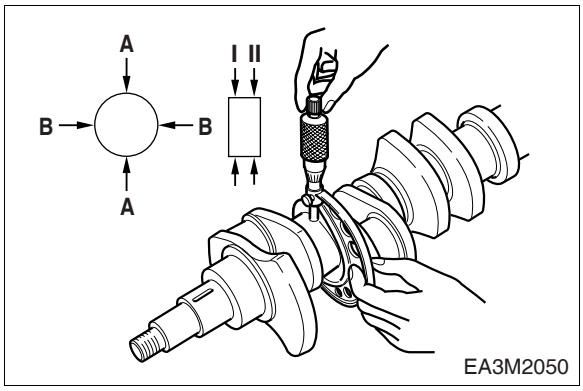

a) Journal and pin diameter

- With outside micrometer, measure the outside diameter of crank journal and crank pin at the direction and position of the figure shown and take the wear.

<Crankshaft journal outside diameter>

Standard	∅103.98 ~ ∅104.00 mm

<Crankshaft pin outside diameter>

Standard	∅89.98 ~ ∅90.00 mm

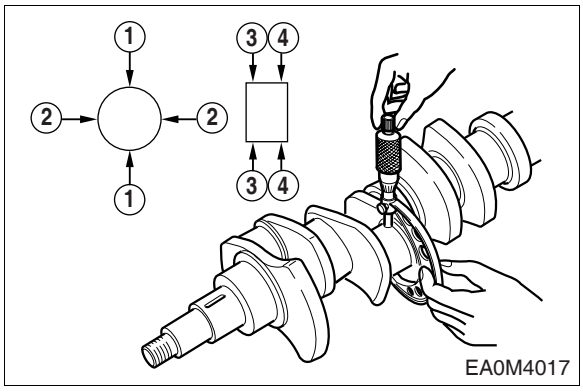

- In case that the lopsided wear is more than the limit value, grind to the undersize, and use the undersized bearing.

<Kinds of bearings for undersize>

(a) Standard

(b) 0.25 (Inside diameter 0.25 mm less than standard)

(c) 0.50 (Inside diameter 0.50 mm less than standard)

(d) 0.75 (Inside diameter 0.75 mm less than standard)

(e) 1.00 (Inside diameter 1.00 mm less than standard)

https://truckmanualshub.com/

- There are 4 kinds as above, and the crankshaft also can be used by regrinding as above.

<"R part" standard value>

① Crank pin 'R' : $4.0^{0}_{-0.5}$

② Crank journal 'R' : $4.0^{0}_{-0.5}$

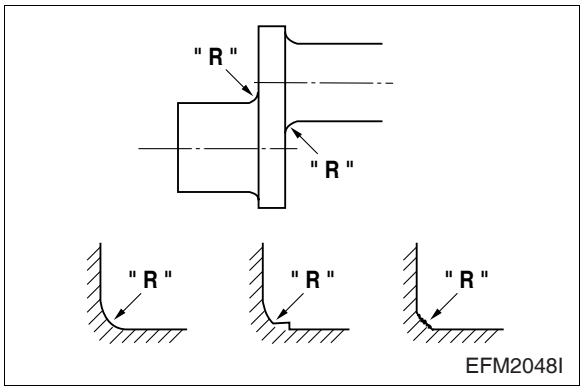

EFM2048I

NOTE :

In case of crankshaft regrinding, the "R part" at the end of bearing must accurately be ground without fail and should avoid any processed jaw or coarse surface

b) Run out of crankshaft

- Place the crankshaft on the V-block.
- Place the dial gauge on the surface plate and measure the run out of crankshaft rotating the crankshaft

Standard	Limit
0.06 mm	0.4 mm

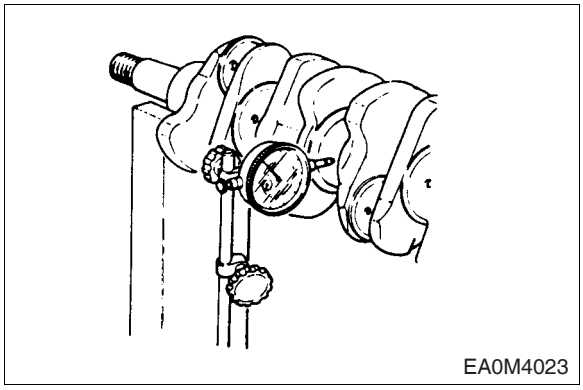
EA0M4023

2) Inspection on crankshaft bearing and connecting rod bearing Inspection

- Inspect the crankshaft bearing and connecting rod bearing for any damages such as lopsided wear, scratch etc. and if abnormal, replace it.
- Inspect the oil clearance between the crankshaft and bearing.

a) How to utilize the cylinder gauge

- Assemble the main bearing at the cylinder block and after tightening the bearing cap at the specified torque, measure the inside diameter.

Journal bearing nominal diameter	∅103.98 ~ ∅104.00 mm

Bearing cap Bolt torque	Initial 30 kg·m + angle 90°

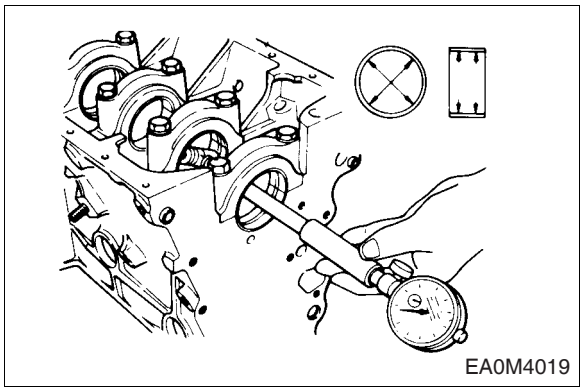
EA0M4019

- Assemble the bearing at the bigger end of connecting rod, and after tightening the bearing cap at the specified torque, measure the diameter.

Connecting rod bearing journal diameter	∅89.98 ~ ∅90.00 mm

Connecting rod Bolt torque	Initial 10 kg·m + angle 90°

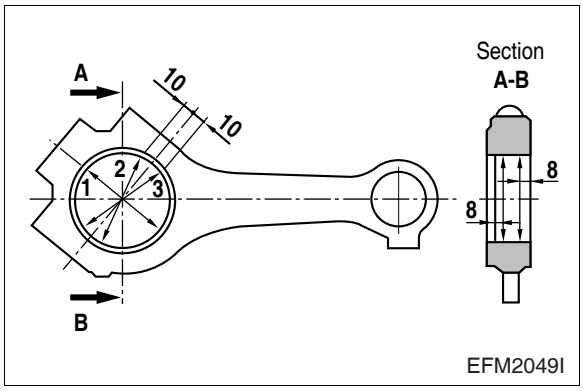

- Crankshaft pin and bearing clearance In case that this clearance value exceeds the limit value, grind the crankshaft journal and pin and then use the undersized bearing.

Standard	Limit
0.066 ~ 0.132 mm	0.166 mm

b) How to utilize plastic gauge

- Install the crankshaft in the cylinder block and place the plastic gauge on the crankshaft journal and pin at axial direction and then after tightening the bearing cap at the specified torque and again after tearing apart the bearing cap, measure the flatten plastic gauge thickness by pick it up. This is the oil clearance.
- With the same points, the oil clearance of connecting rod also can be measured.

c) End play

- Assemble the crankshaft in the cylinder block.
- Install the dial gauge, and measure the end play of crankshaft by pushing the crankshaft to axial direction.

Standard	Limit
0.190 ~ 0.322 mm	0.452 mm

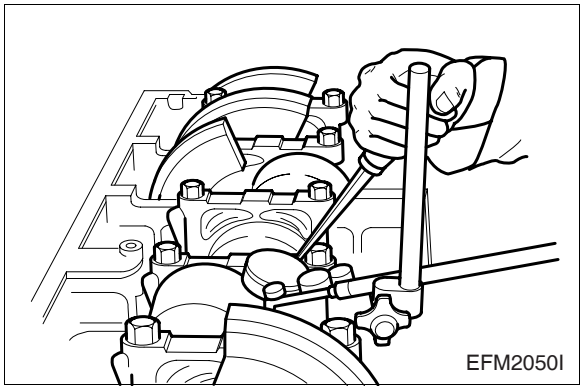

https://truckmanualshub.com/

3.2.7. Piston

1) Piston disassembling

- Pull out the snap ring for piston pin and with a pair of snap ring pliers.
- With a round bar, remove the piston pin.

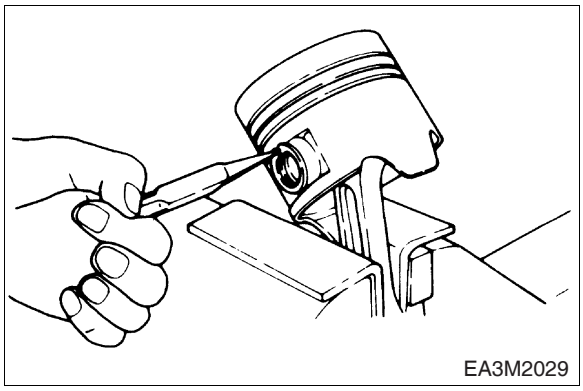
EA3M2029

- With a pair of pliers, remove the piston rings.
- Clean the piston thoroughly.

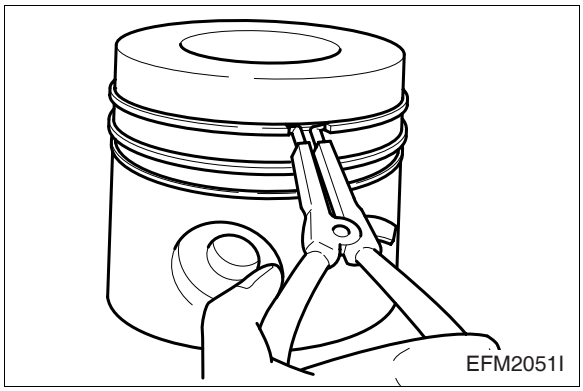
EFM2051I

2) Inspection & measurement of the piston

- With naked eyes, inspect the piston for any wear, crack and scratch and particularly inspect carefully at the ring grooves for any wear.
- With the outside micrometer, measure the piston's outside diameter the measuring position is 71.5 mm from the piston lower end, and the direction of measurement must be perpendicular to the piston pin direction.

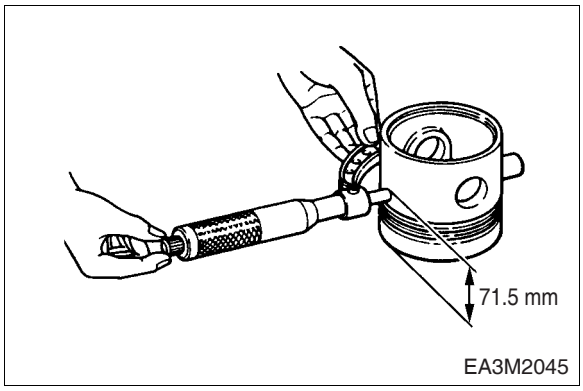

EA3M2045

Standard	∅127.739 ~ ∅127.757 mm

- By comparing the measured value of the piston outside diameter with the cylinder liner inside diameter, the bigger clearance is replaced.

- **Measurement of cylinder bore**

  Assemble the cylinder liner at the cylinder block and measure inner diameter at upper, middle, lower that is, 3 steps by 45° interval and calculate the average values after eliminating the maximum and minimum values.

Standard	∅127.739 ~ ∅127.757 mm

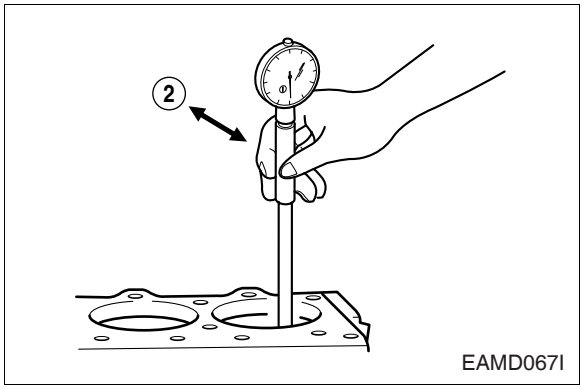

- Measure the clearance between the cylinder liner bore and the piston outer diameter, if it is more than the use limit value, replace either one that is more severe.

Standard	0.233 ~ 0.271 mm

3) Piston ring and ring groove

a) Inspection

- In case of piston ring's wear, damage or engine overhaul, replace piston rings.

b) Gap clearance

- Measure the piston ring cut part.
- Insert the piston ring at the cylinder liner's upper part perpendicularly.
- With a feeler gauge, measure the gap clearance of piston ring.
- If the measured value exceeds the limit value, replace it.

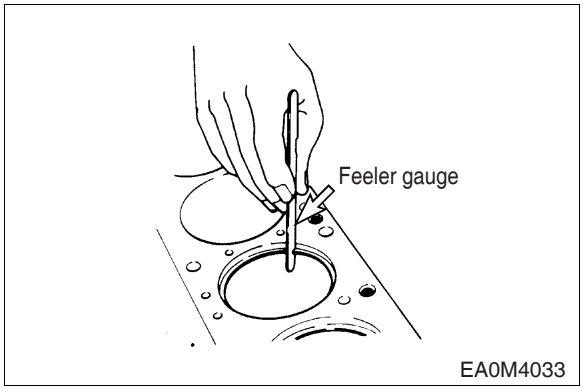

<Piston ring gap>

Division	Standard	Limit
Top ring	0.35 ~ 0.55 mm	1.5 mm
2nd ring	0.40 ~ 0.60 mm	1.5 mm
Oil ring	0.40 ~ 0.70 mm	1.5 mm

c) Piston side clearance

- Assemble the piston ring at the piston.
- Measure the each ring's side clearance and if the measured value exceeds the limit value, replace rings or piston.

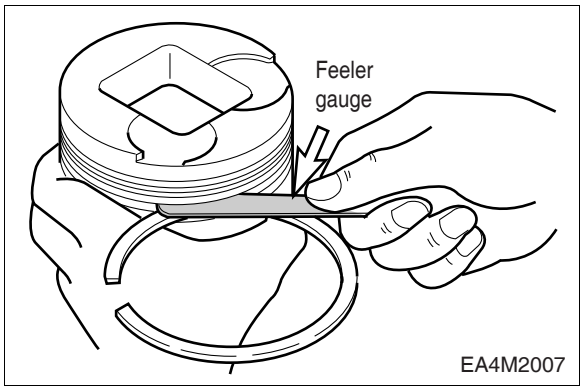

<Piston side clearance>

Division	Specified value	Limit value
2nd ring	0.050 ~ 0.082 mm	1.5 mm
Oil ring	0.030 ~ 0.062 mm	1.5 mm

4) Piston pin

a) Outside diameter

- With the outside micrometer, measure the piston pin's outside diameter and if the value is same as the use limit value or less, replace it.

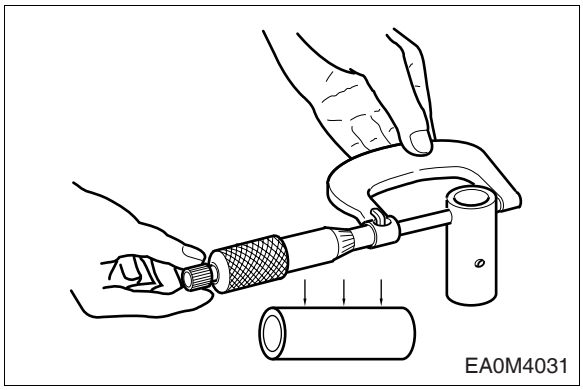

Standard	Limit
∅45.994 ~ ∅46.000 mm	∅69.897 mm or less

b) Piston pin and connecting rod bush clearance

- Inspect the clearance between the piston pin and the connecting rod bush, if it is more than the use limit value, replace either one that is more severe.

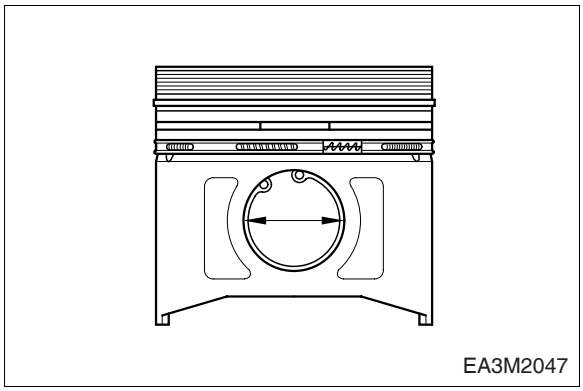

Limit	0.009 ~ 0.015 mm

https://truckmanualshub.com/

5) Connecting rod

a) Distortion and parallel

- Install the measurement tester as figure.
- Measure the distortion of the bigger and smaller end bearing holes after that do as regard parallel of both holes and if abnormal, replace the connecting rod.

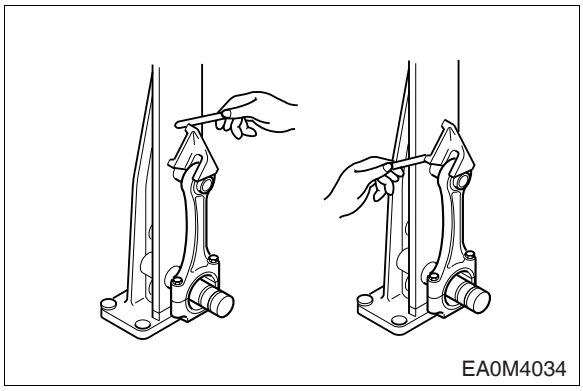

Standard	Limit
0.02 mm	0.2 mm

b) Amounts of wear

- After assembling the connecting rod in the crankshaft measure the clearance between connecting rod bigger hole and crank pin diameter using filler gauge.
- Assemble the connecting rod in the piston and then measure the clearance of these parts.
- If it is more than the use limit value, replace the connecting rod.

Standard	Limit
0.02 mm	0.2 mm

6) Piston reassembling

- After heating the piston at the piston heater for about 5 min (120 ~ 150 °C), by aligning the piston pin hole with the pin hole of connecting rod's smaller end, insert the oil coated piston pin.

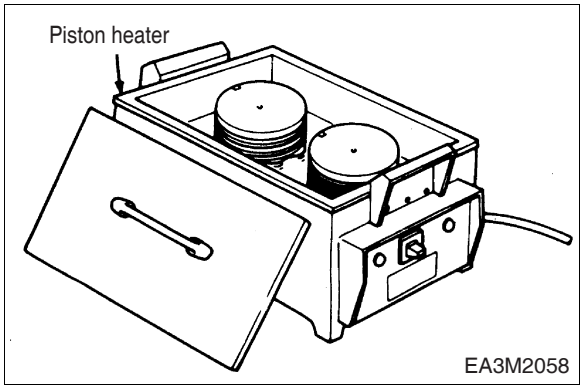

NOTE :
Confirm the direction of connecting rod and assemble.

https://truckmanualshub.com/

- With the snap ring plier, insert the snap rings of the piston pin.
- With confirming the upper side indication of piston ring, after assembling the ring in the piston ring groove, inspect if the movement of ring is smooth.
- Arrange the assembled piston in order as the cylinder number.

7) Water temperature inspection

- Inspect the wax case and spring for any damage.
- With putting the water temperature gauge into water and heating the water at the indirect method, when the water temp reaches to 71 °C, the valve begin to open and fully open when it reaches to 85 °C.
- Measure the valve opening temperature and the valve full opening temperature and inspect if the valve lift is more than 8 mm and if abnormal, replace it

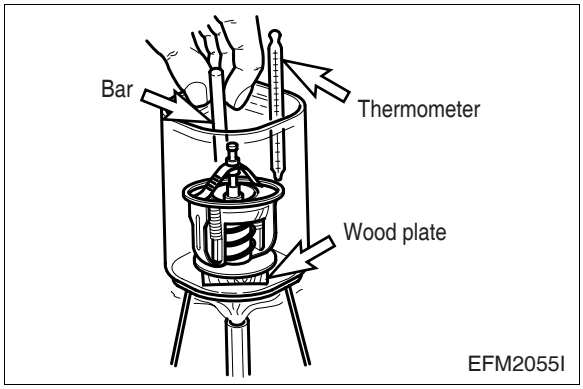

8) Injection nozzle

- Set the nozzle assembly between the vise holder and disassemble it.
- Remove the nozzle nuts and disassemble the inner parts.

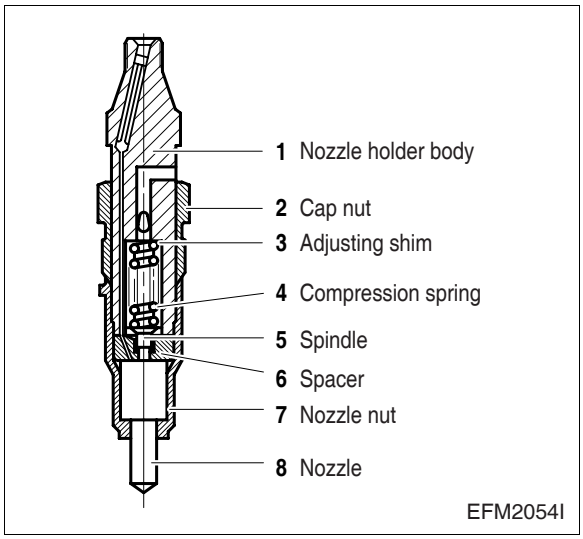

https://truckmanualshub.com/

- Inspect the disassembled parts if there is any damage, replace it.
- Assembling can be done in the reverse order of disassembling.
- After assembling the nozzle, set it in the injection pressure measuring tester.
- By manipulating the tester handle, inspect the injection pressure and atomizing state.

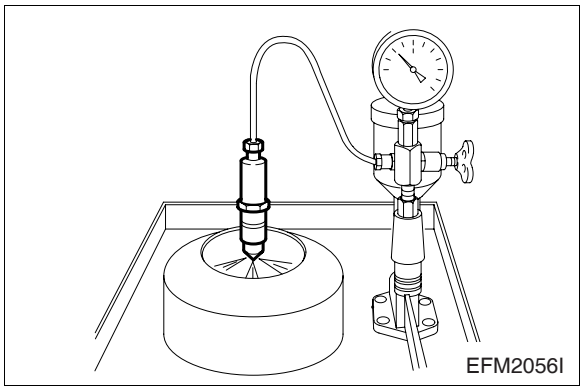

<Operating pressure>

New nozzle holder	300 + 8 kg/cm^2
Used nozzle holder	285 + 8 kg/cm^2

- In case of low or high injection pressure, adjust by adding or reducing the spring tension adjusting shims.
- In case that atomizing state is not good, it should be replaced.

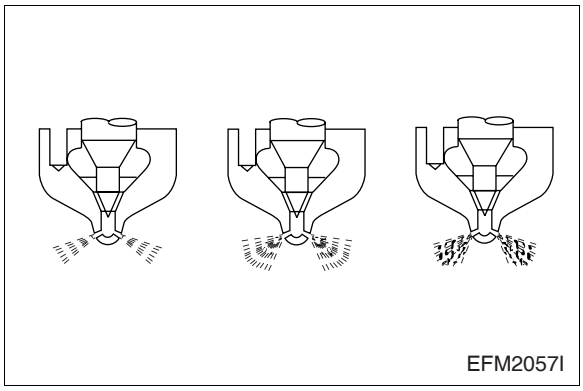

https://truckmanualshub.com/

3.3. Engine Reassembly

3.3.1. General preparation

- Clean all the disassembled parts, particularly oil and water ports, using compressed air, then check that they are free from restrictions.
- Arrange the general and special tools in order for engine assembly operation.
- To wet each sliding part, prepare the clean engine oil.
- Prepare service materials such as sealant, gaskets, etc.
- Discard used gaskets, seal rings, and consumable parts, and replace with new ones.
- Apply only the specified torque for bolts in the specified tightening order and avoid over-tightening.
- Be sure to check that all the engine parts operate smoothly after being reassembled.
- Check the bolts for looseness after preliminary re-assembly.
- After completing the engine re-assembly operation, check if there is missing parts or shortage of parts.
- Keep your hands clean during the working.

3.3.2. Cylinder block

- Cover the floor of the workshop with wood plate or thick paper to prevent damage to the cylinder head and place the head face of the cylinder block towards downward.

3.3.3. Cylinder liner

- Replace the used O-rings with new ones and insert the O-ring in the cylinder liner upper side, but the other one in the cylinder block lower side separately.
- Coat the joint parts where O-ring contacts with oil.
- After slipping the cylinder liner smoothly into the cylinder block, press it in being careful for O-ring not to damage.
- After completion of assembling the cylinder liner, confirm no leaks with 4 kg/cm^2 hydraulic test.

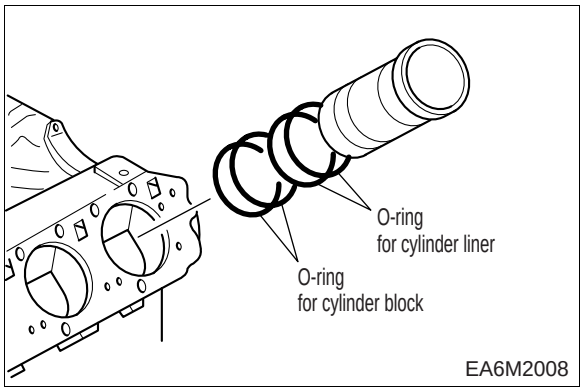

https://truckmanualshub.com/

3.3.4. Oil spray nozzle

- Assemble the oil spray nozzle.
- Tighten the fixing bolts.

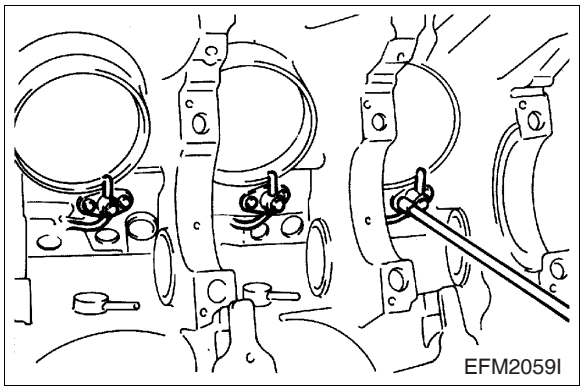

3.3.5. Tappet

- Coat the tappet wholly with clean oil and push in the tappet hole of the cylinder block.

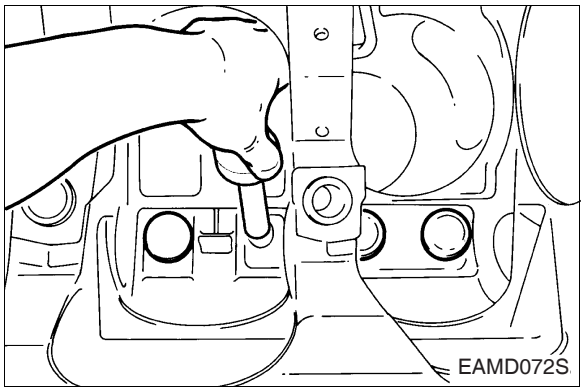

3.3.6. Crankshaft

- Put the wear ring into the heater to heat it up to 150 ~ 200 °C level, push it over the crankshaft by means of a jig.

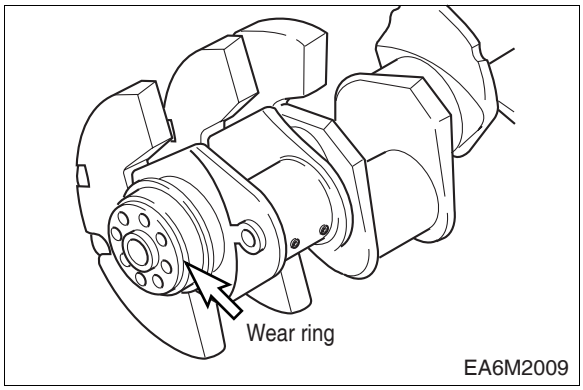

- Assemble the main bearing to the cylinder block and coat it with engine oil. Then assemble the bearing that has a hole to the cylinder block side and one that has no hole to the bearing cap and be careful not to change.

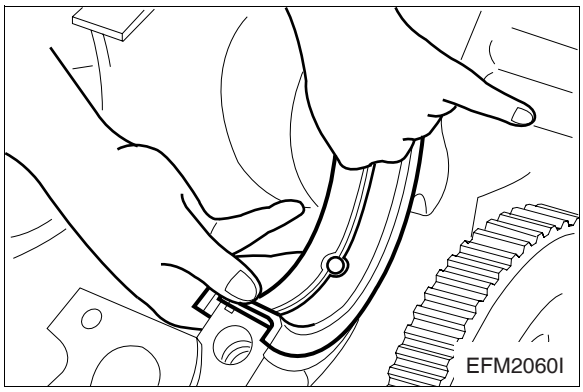

https://truckmanualshub.com/

- Assemble temporarily one bolt each at both bolt' holes and by connecting the wire to the bolts, lift it with crane or chain block and put down on the cylinder block carefully.
- Coat the crankshaft journal and pin parts with clean engine oil, and after fitting the main bearing into the bearing cap and assemble it to the cylinder block making sure of the number in order not to change the bearing cap.

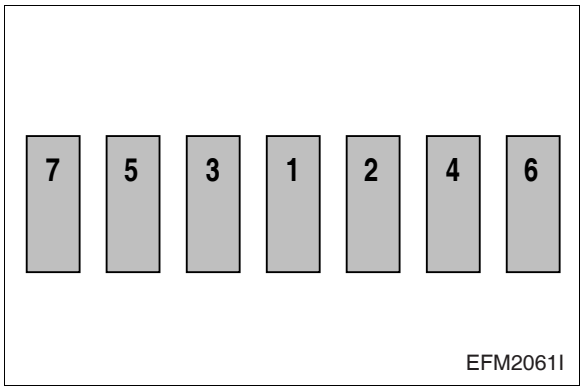

- Coat the bearing cap bolt and its bolt seat part with engine oil necessarily and according to the tightening order, tighten them with 30 kg·m and with rotating angle method (90° $^{+10°}$) and tightening order is as follows.

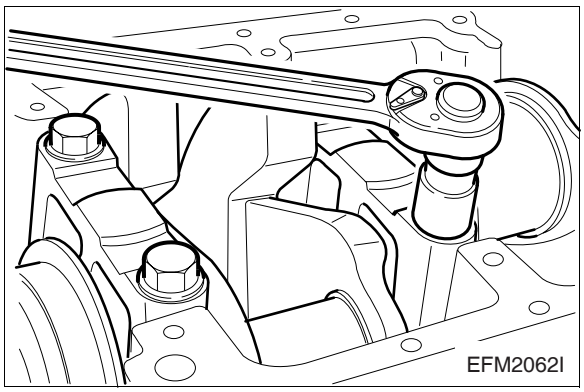

<Bearing cap bolt's Tightening Order>

(1) First step : Coat the bolts with engine oil.

(2) Second step : Screw down 1 ~ 2 threads.

(3) Third step : Tighten with about 15 kg·m by wrench.

(4) Fourth step : Tighten with about 25 kg·m by torque wrench.

(5) Fifth step : Tighten with 30 kg·m by torque wrench.

(6) Sixth step : Tighten with final rotating angle method 90° $^{+10°}$.

However, according to above tightening order, tighten step by step.

- Inspect if the crankshaft's rotation is smooth.
- Assemble the crankshaft gear on the crankshaft and coat a white paint mark on "1" part in order to find easily.

https://truckmanualshub.com/

3.3.7. Camshaft

- Coat the cam bush of cylinder block and camshaft with engine oil.
- Assemble the cam bush and camshaft for them not to be damaged.
- Assemble the crankshaft gear and the camshaft gear making sure that the gear marks on both gears are aligned together as right figure.

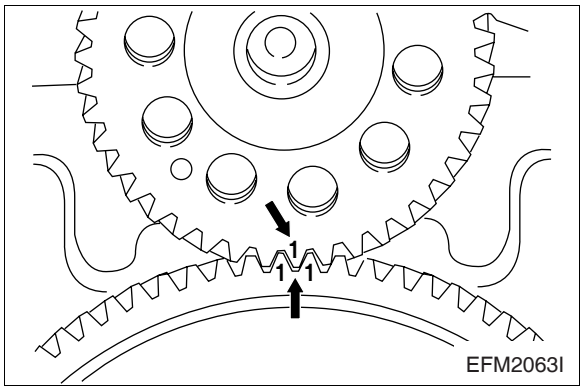

3.3.8. Flywheel housing

- Coat the thrust washer fixing bolt with an adhesive and tighten it with specified torque.

Torque	4 kg·m

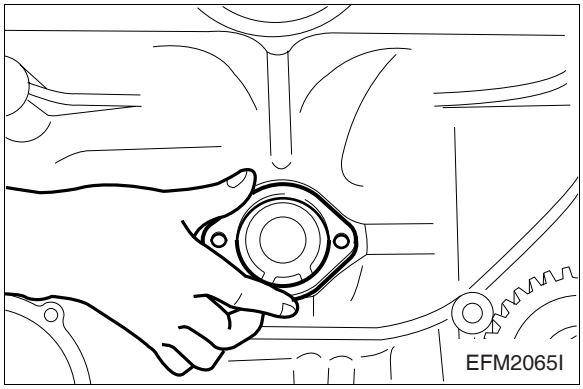

- Coat the oil seal with lubricating oil and assemble it carefully not to be deviated or damaged by means of special tool. (Mandrel for assembling).
- Attach the gasket on the surface of cylinder block where the flywheel housing is to be installed. (In order to prevent the gasket slip down, coat a grease on the cylinder block surface.)
- Temporarily assemble 2ea of guide bolts for installing the flywheel housing to the cylinder block.
- After fitting the flywheel housing holes to the guide pins and engage temporarily 2 ~ 3 threads of fixing bolts, and according to the tightening order (zigzag method) tighten them in the specified torque.

Torque	4 kg·m

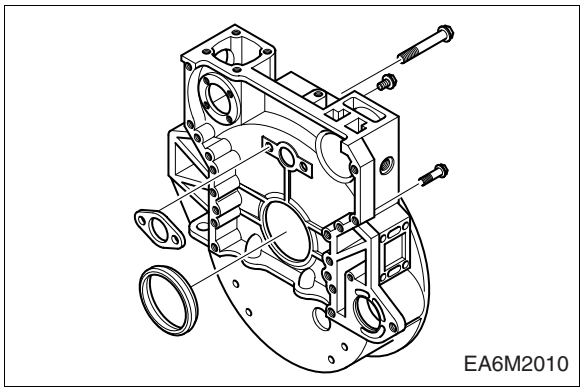

https://truckmanualshub.com/

3.3.9. Tacho sensor

- Loosen the lock nut to hexagonal side of sensor.
- Rotate (CW) the tacho-sensor on fly wheel housing, until the end of it reach on fly wheel ring gear as figure.
- Rotate (CCW) the tacho-sensor for 270° (gap : about 1.0 mm) and fix the lock nut.
- Tolerance limit is 27°. (gap ± 0.1 mm)

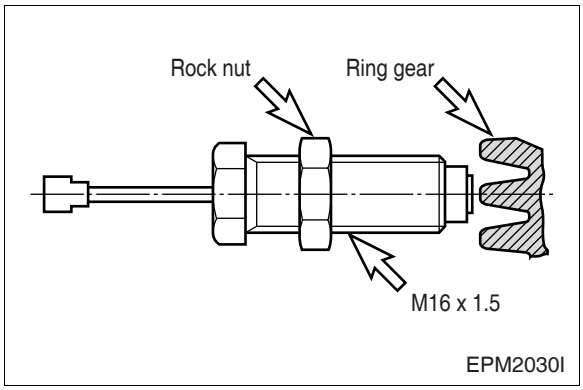

3.3.10. Flywheel

- Installation of flywheel ring gear With a gas burner, heat the ring gear evenly until heat expansion takes place, then install it using a hammer.
- Do not allow the temperature of the ring gear to exceed 200 °C (390 °F)

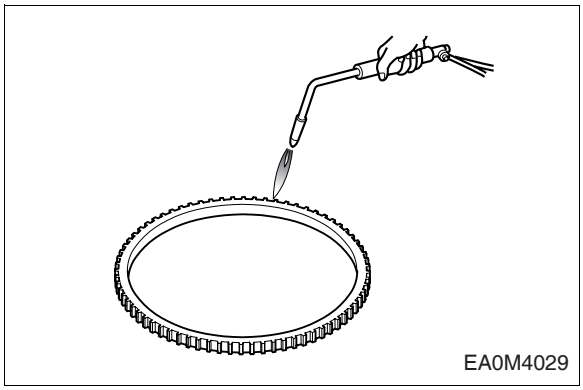

- By means of mandrel, press in the wear ring at the backward face.

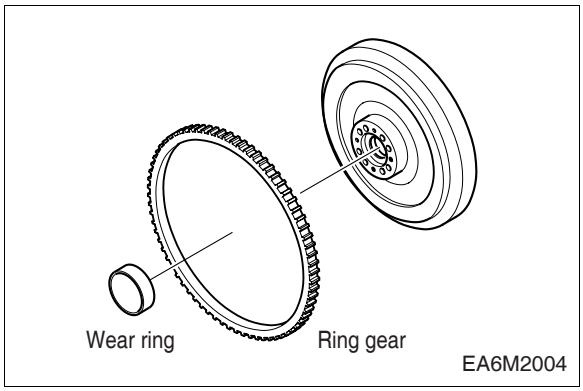

- Install two guide bolts for installing the flywheel to the crankshaft.
- After letting the guide pin insert through the flywheel holes and engaging the fixing bolts by 2 ~ 3 threads temporarily, tighten them to the specified torque according to lightening order. (Zigzag order)

Torque	26 kg·m

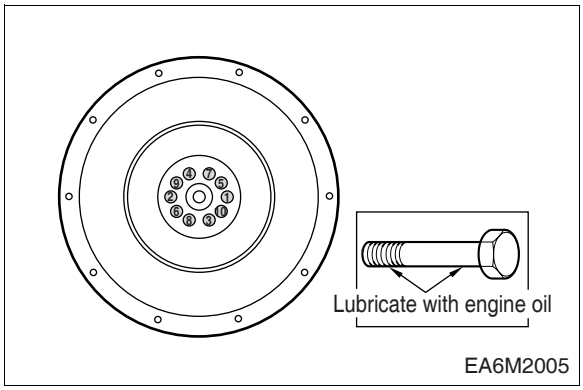

https://truckmanualshub.com/

3.3.11. Oil cooler

- Attach a gasket on the surface in the oil cooler housing where the oil cooler is installed.
- Tighten the oil cooler with fixing bolts.
- Install the oil cooler assembly by tightening the fixing bolts in the zigzag order.

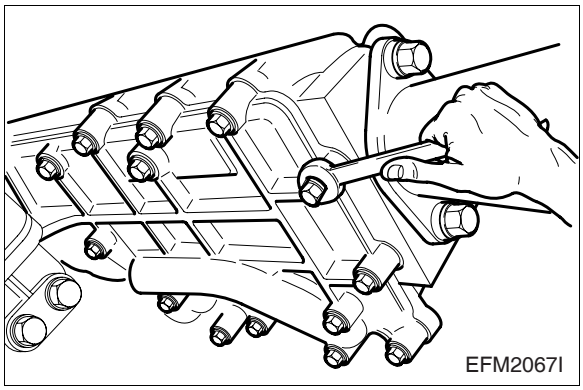

3.3.12. Starting motor

- Install stud bolts at the bolt holes on the flywheel housing for installing the starter.
- Insert the starter into the flywheel housing and tighten the fixing bolts.

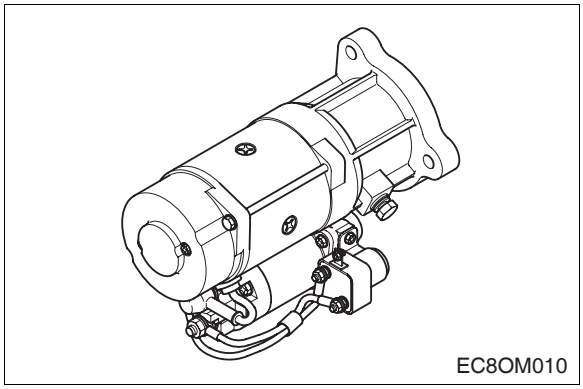

3.3.13. Piston

- Line up the piston assembly in the order of cylinder number and fit the bearings to the connecting rods and bearing caps. However, take care not to swap between the connecting rods and bearing caps.
- Coat the pistons and connecting rod bearings sufficiently with clean engine oil.
- By means of a special tool, insert the piston rings and adjust the angles between the ring gaps at 120° as right figure.
- Push in the piston with hands or wooden bar into cylinder. (Be careful for piston and rings not to be damaged.)

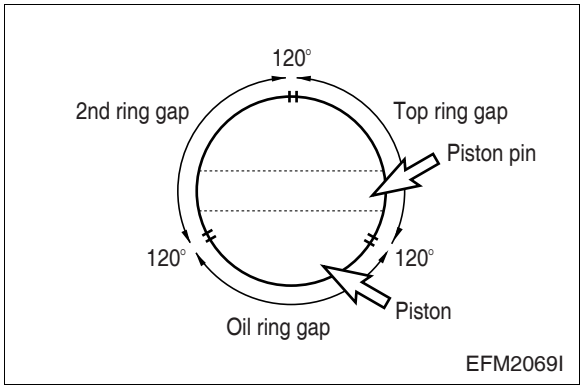

https://truckmanualshub.com/

- Pushing the piston down, rotate the crankshaft about 180° and fit the bearing cap to the connecting rod.
- Coat the tap parts of connecting rod bolts and their seats with engine oil, and after engaging 2 ~ 3 threads of bolts primarily rind then tighten them to the specified torque. (10 kg·m + 90° $^{+10°}$)

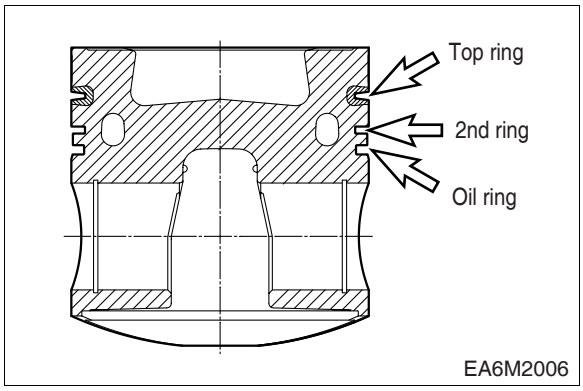

<Connecting rod bolt Tightening Order>

(1) First step : Coat the bolts with engine oil.

(2) Second step : Engage 2 ~ 3 threads by hands.

(3) Third step : Tighten to about 7 kg·m with wrench.

(4) Fourth step : By means of torque wrench tighten to 10 kg·m.

(5) Fifth step : Finally assemble by means of rotation angle method 90°$^{+10°}$.
However, according to above tightening order, tighten them step by step.

*** Standard length of bolt and use limit :**
(from head seat to bolt tip)

Standard length	Use limit
67.5$^{-0.3}$ mm	69 mm

- By moving the connecting rod bearing cap by hands, make sure if there is any play in left and right.
- With same ways as above, assemble in each cylinder rotating the crankshaft.

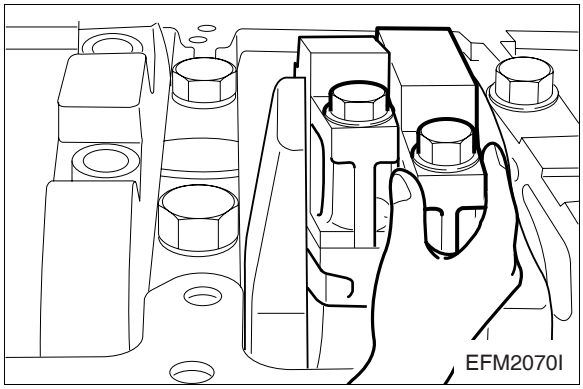

https://truckmanualshub.com/

3.3.14. Front oil seal holder

- After placing the oil seal in the oil holder hole properly, press it in with a mandrel. (Be careful for oil seal not be damaged.)
- Attach the gasket at oil seal holder.
- Align the dowel pin with the oil seal holder dowel hole and assemble them by tapping lightly the dowel pin part with an urethane hammer. When in assembling, take care not to hurt the oil seal by the crankshaft.

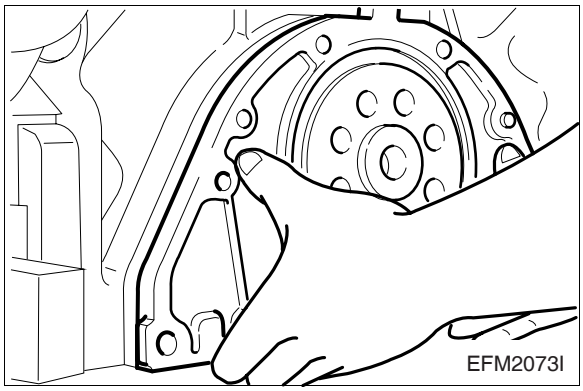

NOTE :
Without coating the oil seal with oil or lubricant, assemble it in the dry state.

- Tighten the fixing bolts in the zigzag method.

3.3.15. Vibration damper

- Assemble the vibration damper tightening firstly by the crankshaft pulley and the fixing bolts.
- Insert the crankshaft pulley assembly to the crankshaft and tighten the fixing bolts in the method of zigzag to the specified torque.

Torque	20 kg·m

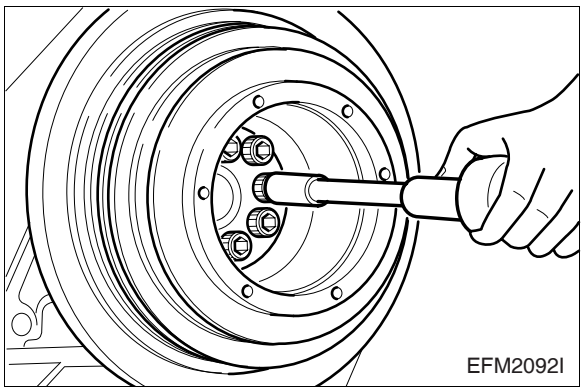

https://truckmanualshub.com/

3.3.16. Oil pump

- Put the oil pump at the place to be installed on the cylinder block.
- Attach the gasket at the surface of oil pump where the pressure regulating valve is to be installed and place the regulating valve on the gasket.
- Assemble the oil pump by tightening the fixing bolts.
- Attach the gasket at the surface of the oil pump where the oil suction pipe is to be installed, and install the oil suction pipe by tightening the fixing bolts.
- Assemble the pipe bracket on the cylinder block side with bolts.

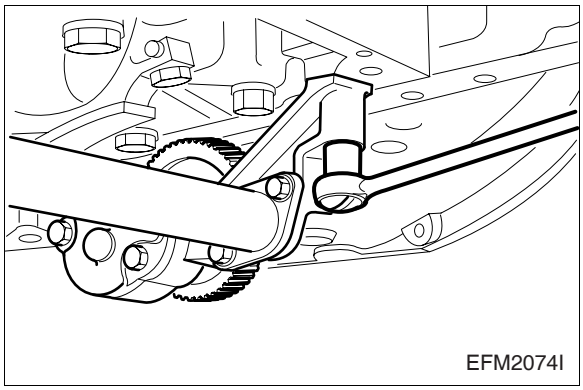

3.3.17. Oil pan

- Clean thoroughly the gasket that is projecting at the junction parts of front oil seal holder and flywheel housing of cylinder block's lower face with a scraper. In the process of gasket removal, be careful for the gasket pieces not to get into the engine inside.
- Attach the gasket to the cylinder block.
- Install the oil pan and tighten the fixing bolts. Then take care not to squeeze out the gasket.
- Install the guide tube and insert the oil level gauge.

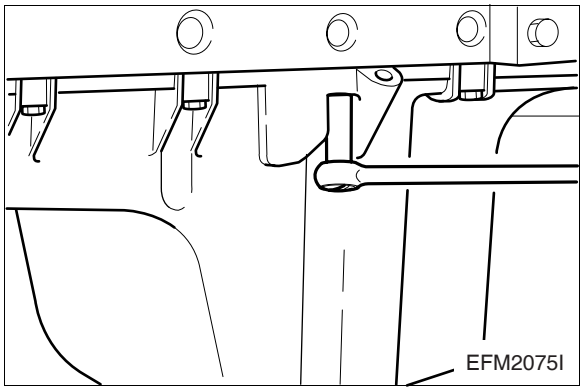

3.3.18. Cylinder head

- Blow the cylinder head bolt holes with compressed air to remove the foreign material cleanly.
- Wipe off cleanly the junction part of cylinder block's head gasket.
- After confirming whether there is foreign material or not necessarily, if there is, remove it.
- Assemble the gasket fitting with the fixing pin of the cylinder block.

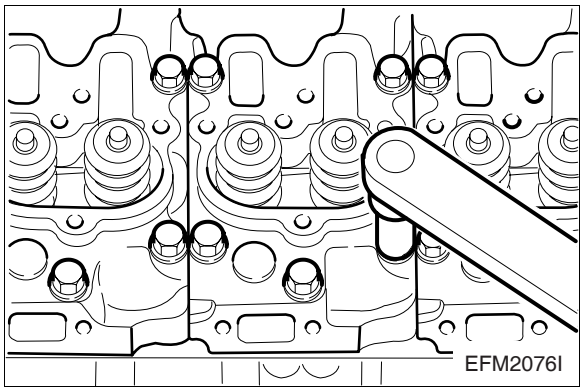

https://truckmanualshub.com/

- Fit the cylinder head assembly on the cylinder block aligning with its dowel pin. (Take care not to damage the head gasket.)
- Coat the cylinder head bolts with engine oil and tighten them to the specified torque according to step by step. However, prior to tightening the bolts, with a long steel rule, the parallel between the cylinder heads must be adjusted.

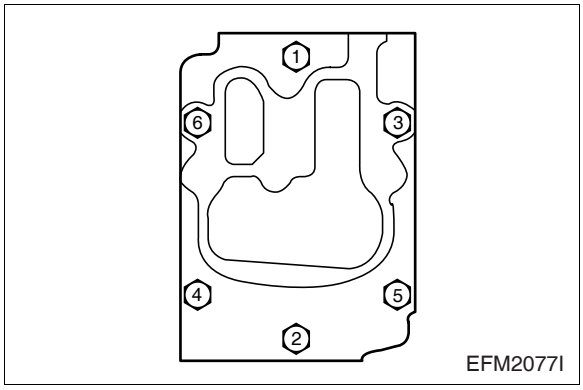

<Cylinder head bolts tightening order>

(1) First step : Coat the bolts with engine oil.

(2) Second step : Tighten temporarily 1 ~ 2 threads by hands.

(3) Third step : Tighten to about 8 kg·m with a wrench.

(4) Fourth step : Tighten to 15 kg·m with a torque wrench.

(5) Fifth step : Rotate 90° by rotation angle method.

*** Standard length of bolt and use limit :**
(from the head seat face to tip)

Bolt No.	Standard length	Use limit
3, 6	168 mm	171 mm
2, 4, 5	144 mm	147 mm
1	109 mm	112 mm

Take care for the foreign material not to get into the cylinder head suction passages.

3.3.19. Nozzle

- Put the new seal ring in nozzle hole of the cylinder head and after inserting the nozzle assembly, tighten it to assemble However, coat the nozzle outer part with the stuck preventing agents and assemble it.

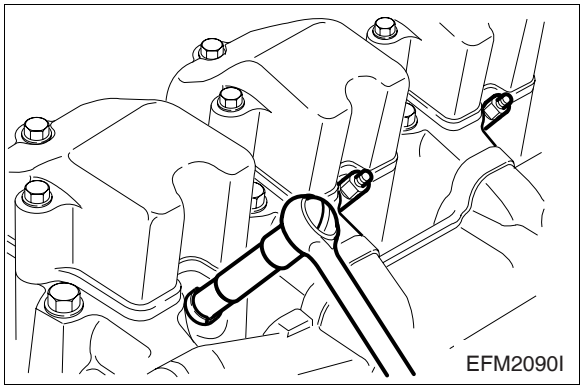

https://truckmanualshub.com/

3.3.20. Rocker arm

- Coat the push rod with engine oil and put it into the push rod hole.
- Make a position the rocker arm assembly on the cylinder head and tighten the fixing bolts to the specified tightening torque.

Torque	6.5 kg·m

- Adjust the valve clearance. Regarding the adjustment, refer to the regular maintenance part.

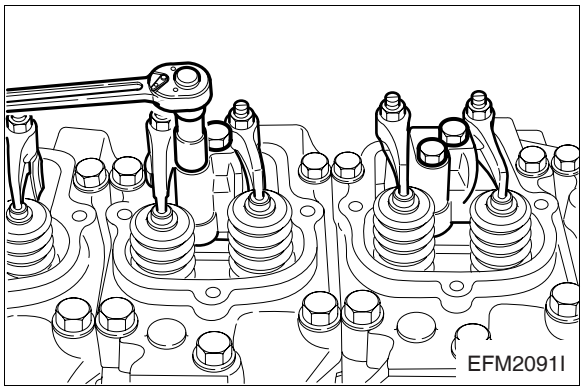

3.3.21. Checking and adjusting valve clearance

- After removing the head cover loosen the lock nuts of rocker arm adjusting screws using a spanner and push the filler gauge of specified value between rocker arm and valve stem.
- Tighten the adjusting screw using a driver until the inserted feeler gauge can be taken a slight resistance between the valve stem and the rocker arm. Then tighten the lock nut simultaneously on not moving the adjusting screw.
- After checking the clearance once more if necessary re-adjust it.

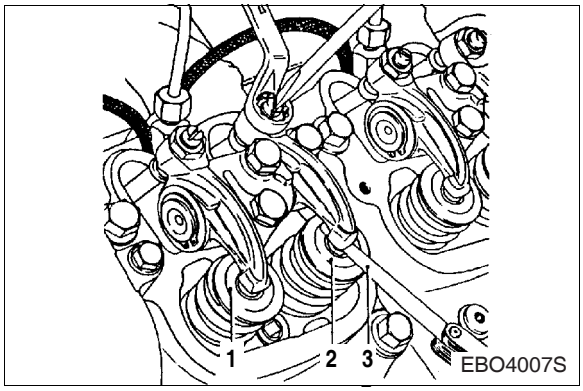

3.3.22. Cylinder head cover

- Attach the new gasket on the surface of cylinder head where the cover is to be installed.
- Assemble the cylinder head cover by tightening the fixing bolts.
- Insert the oil filler cap.

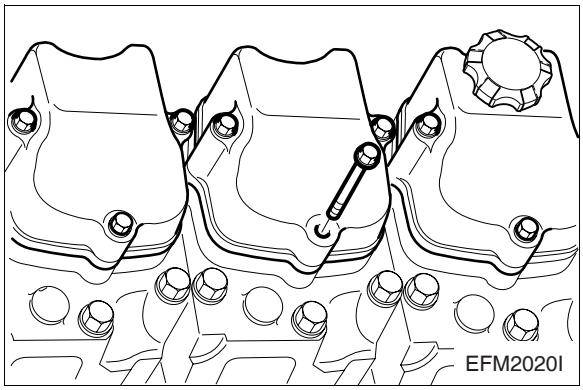

https://truckmanualshub.com/

3.3.23. Fuel injection pump

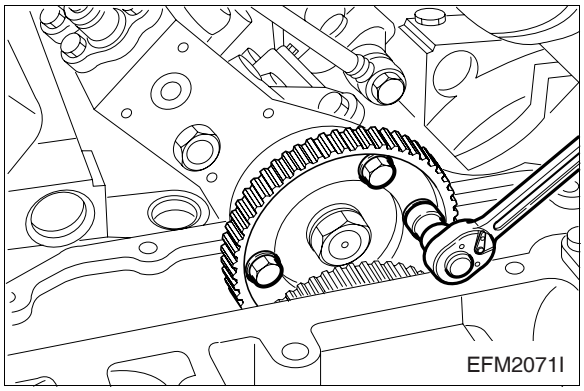

- Turn the crank shaft so as to let the cylinder No.6 for P158LE, PU158TI, P222LE, PU222TI engines and the cylinder No.7 for P180LE, PU180TI come to the overlap TDC (Top Dead Center).
- Rotate the crankshaft to reverse about 30° (in order to remove a backlash), and then rotate it to engine rotating direction to set the fuel injection timing angle.
- Coat the O-ring with grease and insert it at the lower part of fuel injection pump. (Be careful O-ring not to be removed).
- Prior to install the fuel pump drive gear, fit the rubber gasket first.
- Tighten temporarily the fuel injection pump drive gear with aligning the pointer on drive gear with injection pump pointer.
- Fit the injection pump in the appropriate position using a special tool.
  (Special tool no. : EF120-189).

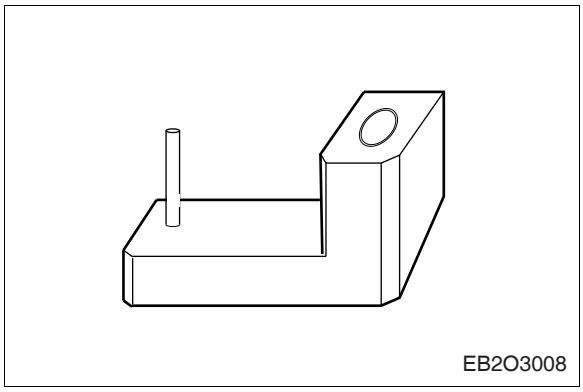

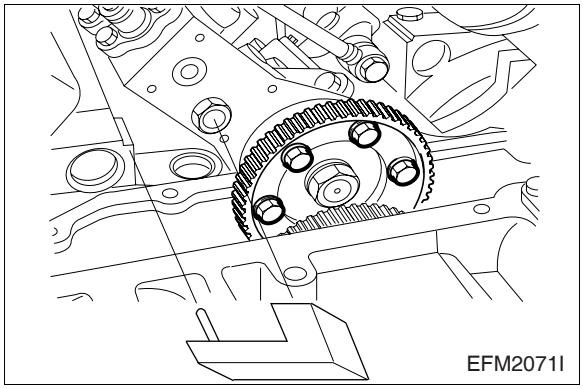

- After fixing the jig hole on the limit cap of the injection pump rotate the jig counterclockwise and align the jig pin to the machined corner of the cylinder block, then assemble the injection pump.
- After completing the preparation for injection pump assembling, install the injection pump and tighten the bolts in the zigzag method.
- After assembling the injection pump, find out whether the injection pump pointer and drive gear's pointer is aligned, and if aligned, tighten the fixing bolts that were temporarily tightened. However, if not aligned, loosen the fixing bolts and turn the fuel pump so as to align the pointers then tighten the fixing bolts.

https://truckmanualshub.com/

In case of exchange the injection pump, should fill the engine oil in the governor of the injection pump before the engine running.

<Oil quantity of the injection pump>

P158LE / PU158TI	P180LE / PU180TI	P222LE / PU222TI
0.95 liter	1.1 liter	1.3 liter

3.3.24. Injection timing

- **How to check the injection timing**

  Check the current injection timing of the engine as follows before adjusting it but if the injection timing is wrong should do it.

  (1) Remove the plug screw assembled in case cover on the injection pump drive gear.(Some cases are needed to remove cover assembly)
  And turn the crank pulley so that the mark on pointer provided on injection pump coincides with matching mark (FB) on the flange surface of the drive gear.

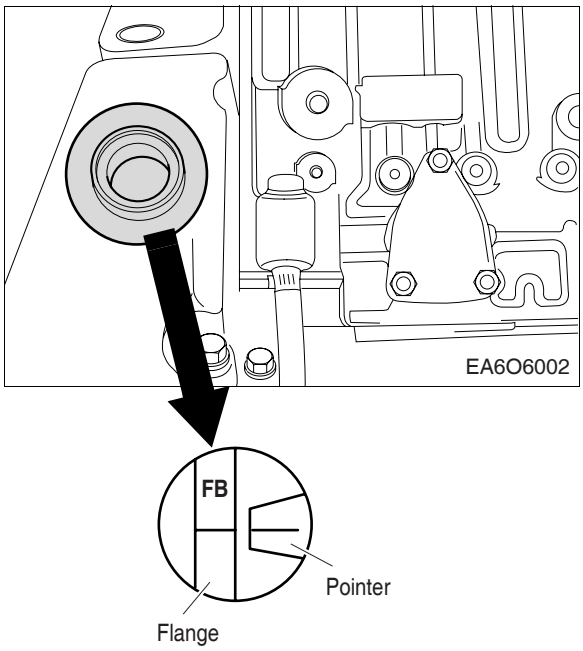

  (2) Check the injection timing degree whether the V-type edge of the flywheel housing sight hole coincides with the engine injection timing degree marked on the flywheel corresponding to fuel delivery position.

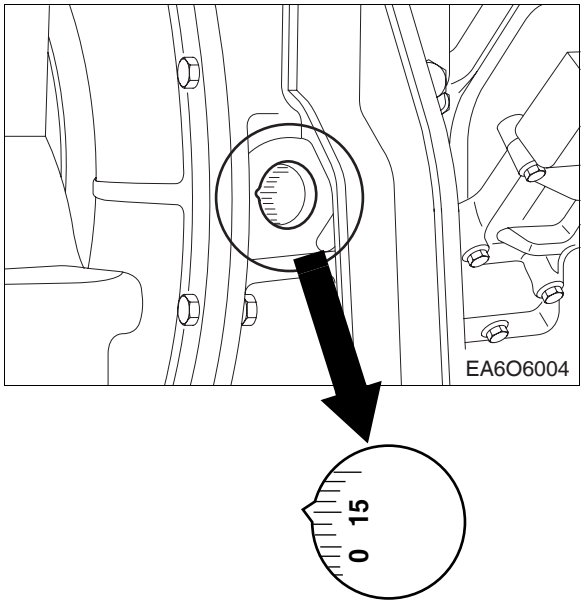

https://truckmanualshub.com/

- **How to adjust injection timing**

  If upper pre-checked injection timing degree is wrong, follow as below.

  (1) Loosen the fixing bolts(M8) of the injection pump driving gear in order to adjust the injection timing slightly.

  (2) Turn the crank pulley clockwise until V-groove of the flywheel housing sight hole is aligned with the injection timing degree of the engine.

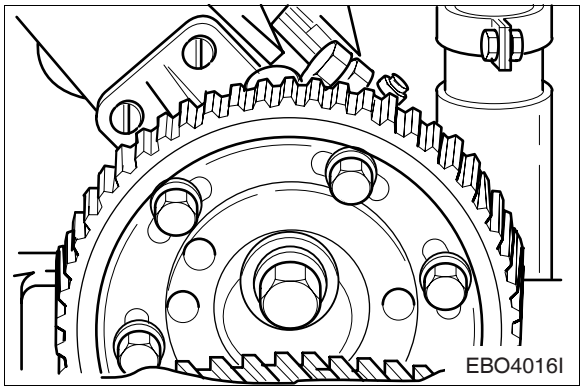

  (3) Coincide the mark on pointer provided in injection pump with the matching mark (FB) on the flange surface of the drive gear by turning the flange in the oblong holes of the drive gear.

  (4) Tighten the bolt (M8) to specified torque. (2.2 kg·m) not to move the drive gear.

  (5) After confirmation that fastening bolts are completely tightened check the start point (injection timing degree) of fuel delivery setting once more if not right repeat it again as same as upper way.

3.3.25. Flywheel housing cover

- Attach the gasket to the flywheel housing cover.
- Install the flywheel housing cover and tighten the fixing bolts by zigzag method.

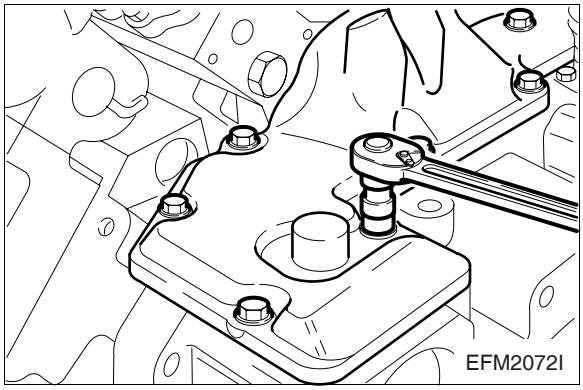

3.3.26. Oil filter

- Install the oil filter cartridge.

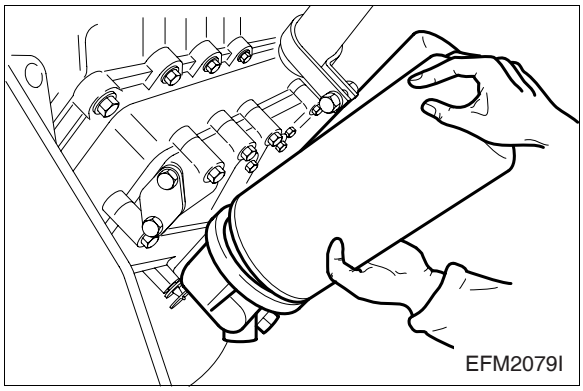

https://truckmanualshub.com/

3.3.27. Cooling water pump

- Attach the gasket of the fresh water pump. (at cylinder block side)
- Assemble the fresh water pump by tightening the fixing bolts. (zigzag method)
- Insert the thermostat of fresh water pump.
- Insert the O-ring to the thermostat and assemble the cooling water pipes by tightening the fixing bolts.

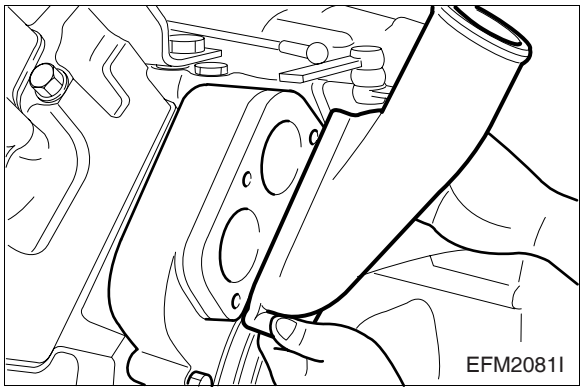

3.3.28. Intake manifold

- Attach the new gasket to the cylinder head side.
- Assemble the intake manifold by tightening the fixing bolts.
- Attach the gasket to the inlet flange and assemble by tightening the fixing bolts.
- Assemble both sides by the above method.
- Attach the gasket to the equalizing pipe that connects the intake manifolds of both sides and assemble both manifolds by tightening the fixing bolts.

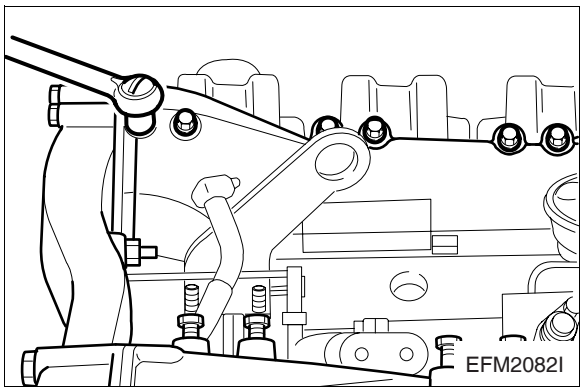

3.3.29. Exhaust manifold

- Connect the exhaust manifold that is consists of two sets after inserting the exhaust gas ring between them.
- Attach a new gasket to the exhaust manifold.
- Attach a gasket to the exhaust elbow that Is connected to the exhaust manifold, and assemble the elbow by tighten the nuts for connection.
- Assemble both sides in the same method as above.

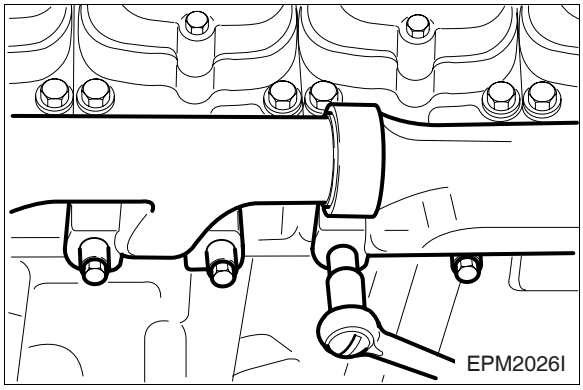

https://truckmanualshub.com/

3.3.30. Turbo charger

- Attach a gasket to the exhaust elbow and assemble the turbocharger with fixing bolts.
- Install the connecting pipes and an O-ring between the inlet flange and turbocharger Then, it is assembled with the O-ring that was coated with engine oil.
- Attach a gasket on the oil supply pipe and assemble the pipe with the fixing bolts.
- Attack a gasket on the oil discharge pipe and assemble the pipe by tightening the bolts.
- At the same method as above, both sides are assembled.

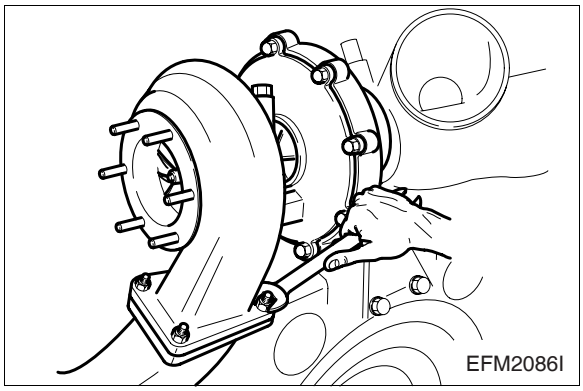

3.3.31. Intake stake

- Connect rubber hoses between the intake stake and turbocharger and assemble by tightening clamps.

3.3.32. Fuel injection pipe

- Connect the fuel injection pipes to the fuel injection pump and the nozzle respectively and then assemble them by tightening nuts.
- Assemble the fuel return pipes by tightening fixing nuts.

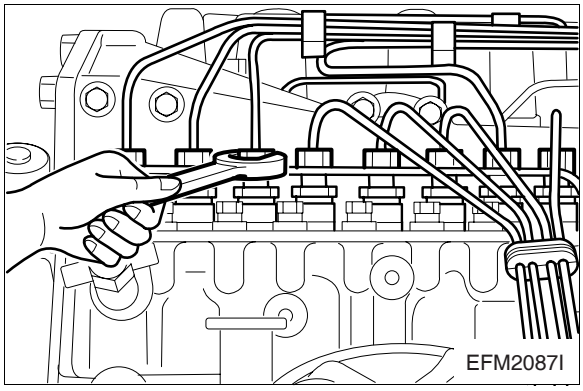

https://truckmanualshub.com/

3.3.33. Fuel filter

- Assemble the fuel filter to the intake stake by tightening bolts.
- As for the replacement method of fuel filter element, loosen the fixing bolts of upper parts, and assemble the element with O-ring that must necessarily be a new one.

3.3.34. Alternator

- Assemble the alternator bracket to the lower part of cylinder block by tightening the fixing bolts.
- Install the alternator supporting plate.
- Connect the crankshaft and the alternator and water pump pulleys with V-belts by inserting them into the respective pulleys.
- Adjust the alternator support nut until the belt tension can be 10 mm ~ 15 mm by pushing with thumb.

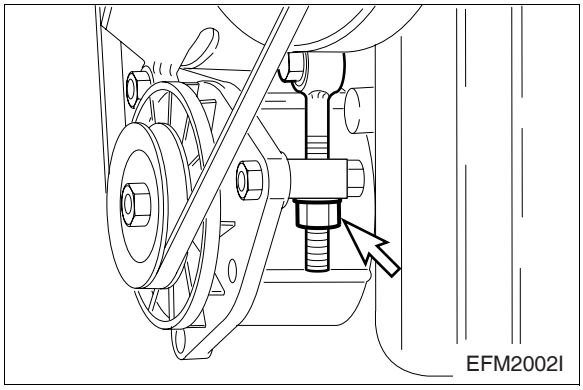

3.3.35. Idle pulley

- Install the idle pulley.
- Connect the water pump, the crank and the idle pulleys with driving V-belts.
- Tighten eye bolt and nut. (10 mm ~ 15 mm or so pushing with a thumb)

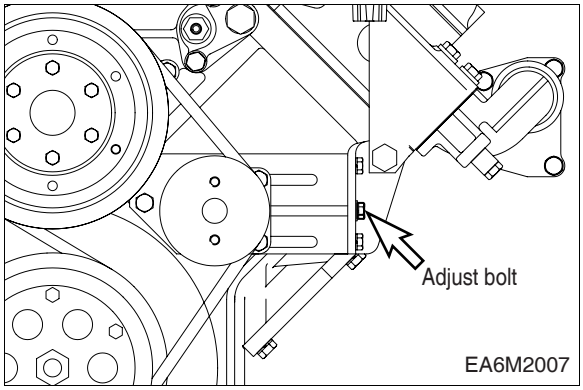

https://truckmanualshub.com/

3.4. Breaking-In

3.4.1. Operation of a new engine (Break-In)

Because the sliding surfaces of a new engine are not lapped enough, the oil film can be destroyed easily by overload or overspeed and the engine life-time may be shortened.

Therefore the following things must be obeyed by all means.

Up to the first 50 hours

- Engine should be run at fast idling until the temperature of the engine becomes normal operating condition.
- Overload or continuous high speed operation should be avoided.
- High speed operation with no load should be prevented.
- Abrupt start and stop of the engine should be avoided.
- Engine speed must be under 70 % of its maximum speed.
- Maintenance and inspection must be accomplished thoroughly.

3.4.2. Check points for break-in

During the break-in (the initial running of the engine) period, be particularly observant as follows :

1) Check engine oil level frequently. Maintain oil level in the safe range, between the “min.” and “max.” marks on dipstick.

NOTE :
If you have a problem getting a good oil level reading on dipstick, rotate dipstick 180° and re-insert for check.

2) Watch the oil pressure warning lamp. If the lamp blinks, it may be the oil pick-up screen is not covered with oil. Check oil dipstick. Add oil to the oil pan, if required. Do not overfill. If level is correct and the status still exists, see your DEALER for possible switch or oil pump and line malfunction.

NOTE :
Oil pressure will rise as RPM increases, and fall as RPM decreases. In addition, cold oil will generally show higher oil pressure for any specific RPM than hot oil. Both of these conditions reflect normal engine operation.

3) Watch the engine water temperature gauge and be sure there is proper water circulation. The water temperature gauge needle will fluctuate if water level in expansion tank is too low.
At the end of the break-in period, remove break-in oil and replace the oil filter. Fill oil pan with recommended engine oil. Refer to following table.

<Engine Oil capacity>

	Oil pan (only)
P158LE / PU158TI	21 liter
P180LE / PU180TI	35 liter
P222LE / PU222TI	40 liter

https://truckmanualshub.com/

4. Commissioning and Operation

4.1. Preparations

- Before daily starting the engine, check fuel level, coolant level and engine oil level and replenish, if necessary.
- The notches in the dipstick indicate the highest and lowest permissible oil levels.

CAUTION :
Do not add so much engine oil that the oil level rises above the max. marking on the dipstick. Overfilling will result in damage to the engine.

- The oil required in the sump is specified in the “Engine Specification” at the head of these instructions.

NOTE :
The oil required to fill the oil filters and pipes depends upon the engine equipment and use and must be determined individually at the time of initial commissioning. (Make a note of the determined quantity).

- Ensure outpost cleanliness when handling fuels, lubricants and coolants.
- Use approved fuels, lubricants and coolants only, as otherwise the manufacturer’s guarantee will be null and void.

4.2. Starting

- Insert key in starting lock.
- Moving control lever to “Idle speed”.
- Key switch rotate clockwise.
- Do not operate for longer than 10 seconds at a time.
- After ignition of the engine, take-off the hands in key switch.
- And adjust control lever for desired speed.
- If engine fails to start, release the key, wait about 1 minute, then operate starter again.
- Avoid running the cold engine for any length of time since in any internal combustion engine this is liable to cause increased wear due to corrosion. Prolonged idling is harmful to the environment.

NOTE :
On initial start of an overhauled engine or after long periods without use, press shut-down lever in “stop” position and operate starter motor for a few seconds (max. 10) until oil pressure is indicated.
Only then the engine should be started in the normal way

https://truckmanualshub.com/

4.3. Running In

- It is recommended that new or overhauled engines should not be operated at a load higher than about 75 % maximum load during the first few hours of operation. Initial run-in should be at varying speeds. After this initial run-in, the engine should be brought up to fuel output gradually.

4.4. During Operation

Do not overload the engine. Do not exceed the maximum permissible engine tilt. If faults occur, find their cause immediately and have them eliminated in order to prevent more serious damage!

During operation the oil pressure in the engine lubrication system must be monitored. If the monitoring devices register a drop in the lube oil pressure, switch off the engine immediately.

The coolant temperature should be approx. 80 to 95 °C.

The charge warning light of the alternator should go out when the engine is running.

1) Alternator

In order to avoid damage to the alternator, observe the following instructions ;

While the engine is running

- Do not de-energize the main battery switch!
- Do not disconnect the battery or pole terminals or the cables!
- If during operation, the battery charge lamp suddenly lights up, stop the engine immediately and remedy the fault in the electrical system!
- Do not short-circuit the connections of the alternator with those of the regulator or said connection with ground, not even by briefly bringing the connections into contact!
- Do not operate the alternator without battery connection! of the alternator with those of the regulator or said connections with ground, not even by briefly bringing the connections into contact!
- Do not operate the alternator without battery connection!

4.5. Shutting Down

- Cut off the main circuit breaker of the generator control panel to “stop” After the engine has been running at a high load level, do not shut it down immediately but allow it to idle about 5 minutes so that temperatures may equalize.

  Remove key from starting lock

CAUTION :

Ensure that the engine can not be started by unauthorized persons.

https://truckmanualshub.com/

4.6. Maintenance and Care

4.6.1. Oil level

- Check the oil level in the engine sump daily with a dipstick. The level should be between the two notches cut into the dipstick and should never be allowed to drop below the lower notch.

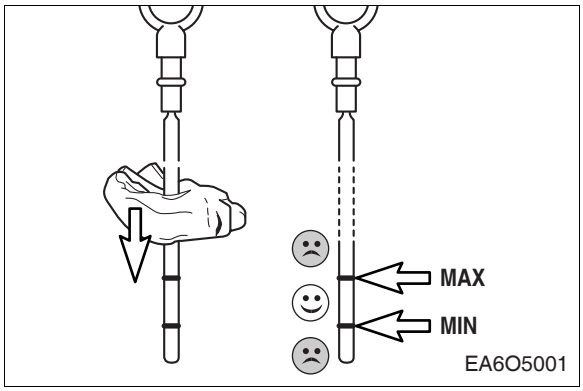

CAUTION :
Do not add so much engine oil that the oil level rises above the max. marking on the dipstick. Over filling will result in damage to the engine.

- The oil level should be checked with the engine horizontal and only after it has been shut down for about 5 minutes.

4.6.2. Oil drainage

- With the engine at operating temperature, remove the oil drain valve on the oil sump and the oil cartridge bowl and allow the old oil to drain off completely. Use a vessel of sufficient size to ensure that the oil does not overflow. Refit the oil drain valve.

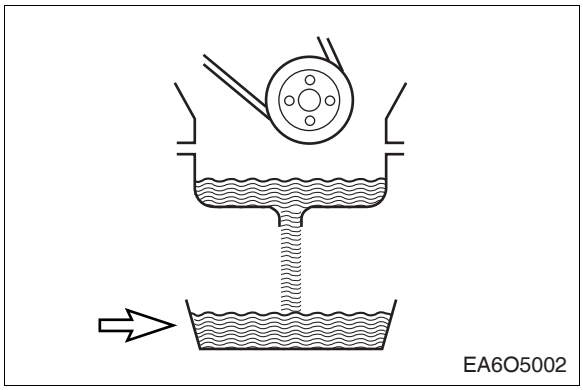

CAUTION :
The oil is hot-risk of scalding.
Do not touch the oil drain plug with bare fingers. Oil is an environmental hazard. Handle ii with care!

https://truckmanualshub.com/

- **Recommend of lubricating oil**

Initial factory fill is high quality break-in oil for API Service CH-4 grade. During the break-in period, frequently check the oil level. Somewhat higher oil consumption is normal until piston rings are seated. The oil level should be maintained in the safe range between the Min. and Max. mark on the dipstick. To obtain the best engine performance and engine life, Engine oil is specified by API service, lettered designations and SAE viscosity numbers. If the specified engine oil is not available, use a reputable brand of engine oil labeled for API Service CH-4 and SAE viscosity 15W40. Refer to oil identification symbol on the container

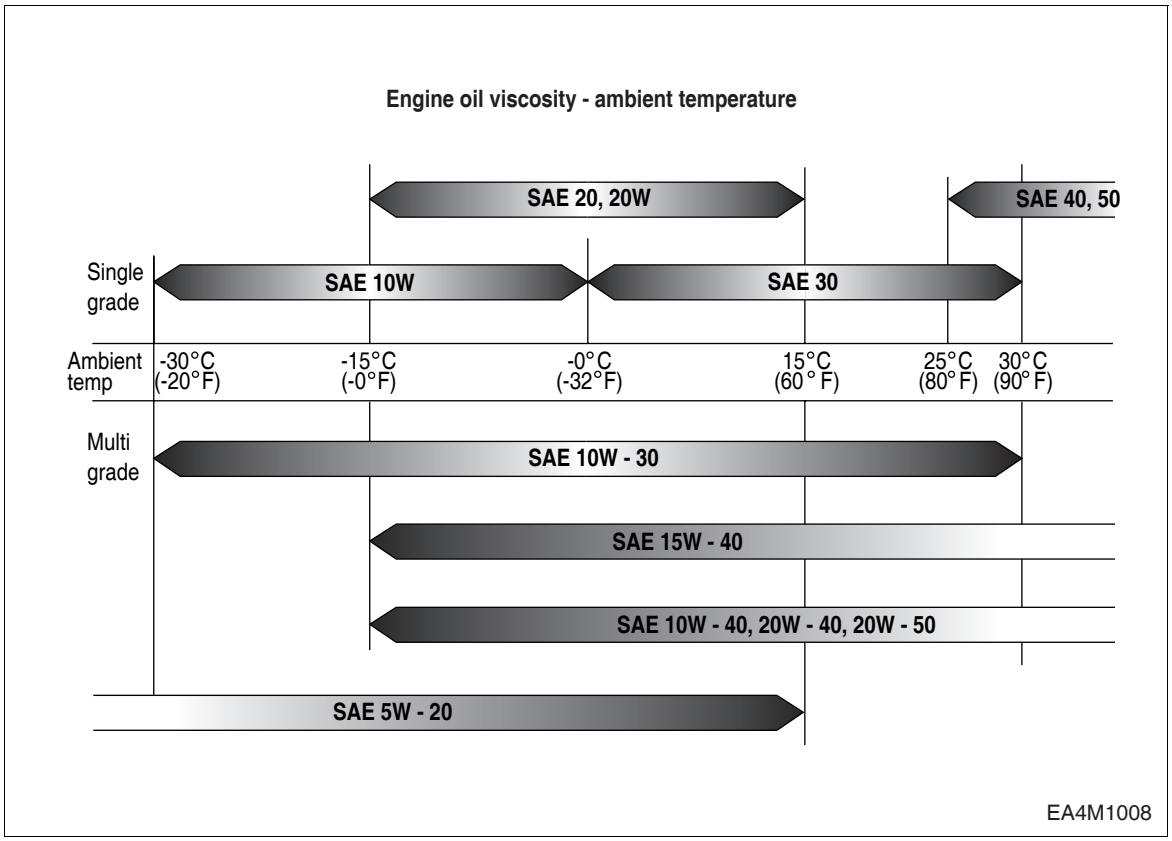

4.6.3. Refilling with oil

- Refill with fresh engine oil at the oil filler neck.
- After refilling with oil, rotate the engine with the starter and move the shut-down lever to “stop” at the same time until the oil pressure warning light goes out and the oil pressure gauge shows a pressure.
- Then start the engine and allow it to run at medium speed for a few minutes. Check oil pressure and tightness of system.
- Then shut down the engine. After about 5 minutes, check the oil level. The oil level should now be at the upper notch of the dipstick, but not higher.
- Add any necessary oil to the upper dipstick mark.

https://truckmanualshub.com/

4.6.4. Lubricating oil filter

- Cleaning of the lubricating oil is effected in a full-flow oil filter with paper cartridges. A bypass valve ensures continuity of oil supply if the filter elements should be clogged.
- After draining off the oil release tie screw. Remove filter bowl. Renew filter cartridge. Thoroughly clean all other parts in cleaning fluid. Use new gaskets for re-assembly.

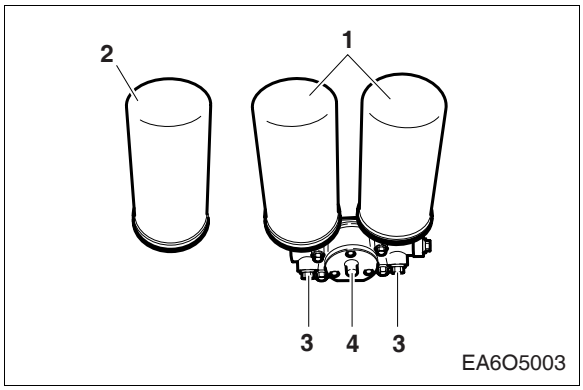

1. Oil filter(Change over-type)
2. Element
3. Oil drain plug
4. Selector cock

- During continuous operation the selector lever that both filter halves are in operation.
- Observe positions of selector level.

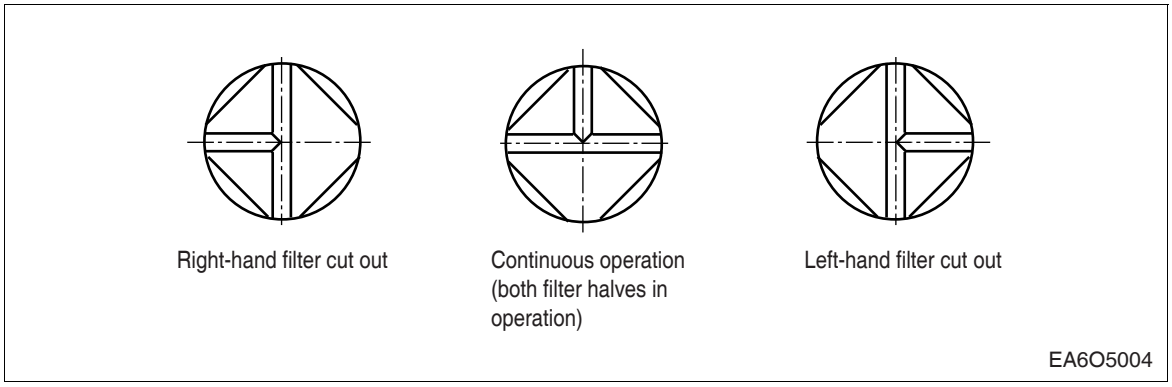

CAUTION :

Do not leave selector lever in any intermediate position because this would be liable to interfere with oil supply.

https://truckmanualshub.com/

4.6.5. Renewal of filter cartridges

- Allow the filter content to run off along drain plugs. Hold a suitable vessel under hole.

CAUTION :
Oil is hot and under pressure!

- After releasing the clamping bolts remove filter bowls.
- Renew filter cartridges. Thoroughly clean all other parts in cleaning fluid. (do not allow cleaning fluid to enter the oil circuit)

NOTE :
To prevent the seal from twisting hold the filter bowl firmly when tightening the tensioning screw.

- Every time an oil change is made, the two oil filter cartridges should be renewed!

CAUTION :
Use oil filters are classed as dangerous waste and must be disposed of accordingly.

https://truckmanualshub.com/

5. Maintenance of Major Components

5.1. Fuel Injection System

5.1.1. Governor system for generator engine

Governor system for fuel injection pump consists of “Integral Actuator” and “Speed Control Unit”.

- **Integral actuator**

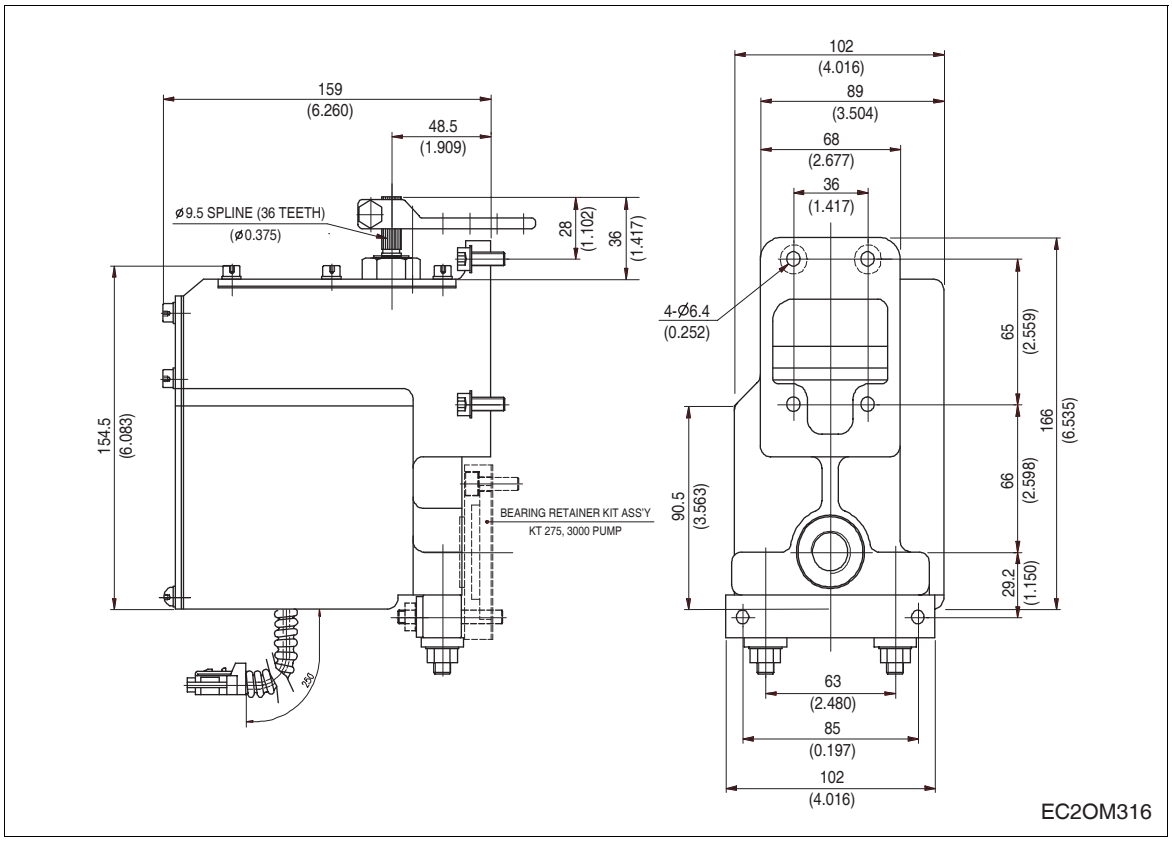

Fig. No.	Description	Q’ty	Remark
1	Frame	1	
2	Bearing retainer kit Ass’y	1	
3	Mounting bar	1	
8	SWP connector	1	Mg610320
11	Front cover	1	T3.2
13	Shaft	1	
15	Return spring guide Ass’y	1	
16	Oil seal	1	SC 0283 E0
17	Allen screw	8	M5 × 0.8 × L12
23	Manual stop device Ass’y	1	
30	Stop plate	1	T3.2
52	Return shaft Ass’y	1	
54	Stop level	1	
62	Lead wire		LG 16AWG
63	Corrugate tube		Dia.10, L250 + -10

https://truckmanualshub.com/

5.1.2. Speed control unit for governor system

(DWC-2000 series speed control unit)

<Introduction>

- This speed control unit performs the electronic function of the engine governing system. The speed control unit senses the pulses from the magnetic speed sensor, compares them with the speed control unit's set point and supplies the appropriate current output to the actuator to control the engine's fuel system.
- An integral, independent single element speed switch is provided internally which can be used to initiate engine shutdown in the event that an overspeed condition is reached. The performance of the speed control unit is fast and responsive in either isochronous or droop operation.
- Adjustments are provided for: operating speed, idle speed, overspeed shutdown setting, droop, run ramp, crank ramp, starting fuel, speed ramping and two performance adjustments(gain and stability). All adjustments are accessible from the front cover. The primary features of the DWC-2000 Series speed control unit are the engine STARTING FUEL and SPEED RAMPING adjustments. The use of these features will minimize engine exhaust smoke experienced prior to attain engine operating speed. The speed control unit also includes other features such as adjustable droop and idle operation, inputs for accessories used in multi-engine or special applications and protection against reverse voltage polarity, transient voltages and accidental short circuit of the actuator. Loss of battery supply, loss of speed sensor and overspeed signaling are built-in to provide engine shutdown.

<Description>

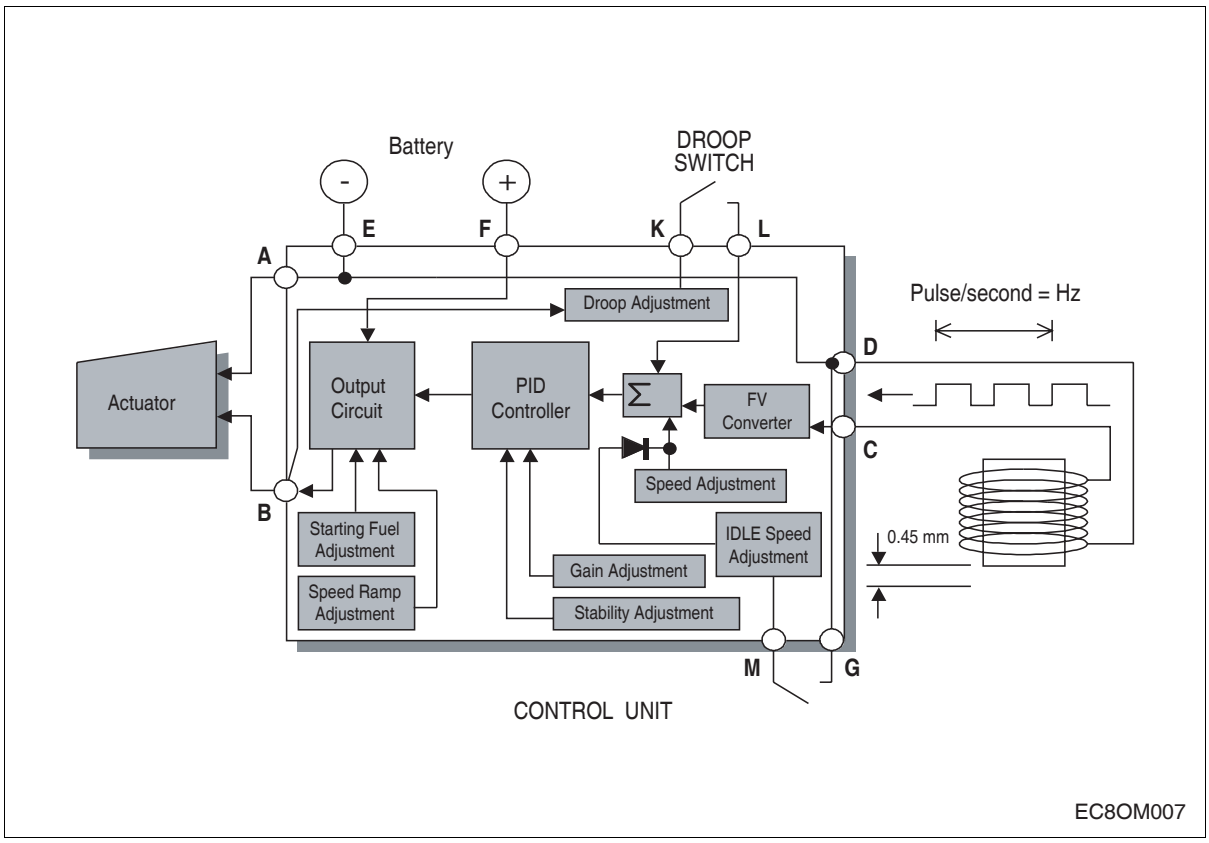

- The engine speed signal is usually obtained from a magnetic speed sensor mounted in close proximity to the teeth of a ferrous ring gear that is driven by the engine. The frequency of the speed sensor signal is proportional to the engine speed. The speed control unit will accept any signal if the frequency is proportional to engine signal, and in the frequency range of the speed control unit (1 K to 7.5 K Hz.). The speed sensor is typically mounted in close proximity to an engine driven ferrous gear, usually the engine ring gear. As the teeth of the gear pass the magnetic sensor, a signal is generated which is proportional to engine speed. The signal strength must also be within the range of the input amplifier. An amplitude of 1 to 120 volts RMS is required to allow the unit to function within its design specifications. The speed control unit has an input impedance of 20 K-ohms between the speed sensor input terminals. (“C” & “D”). Terminal “D” is connected internally to the battery negative. Only one end of the shielded cable should be connected.
- When a speed sensor signal is received by the controller, the signal is amplified and shaped by an internal circuit to form constant area pulses. If the speed sensor monitor does not detect a speed sensor signal, the output circuit of the speed control unit will turn off all current to the actuator.
- The summing point of the speed sensor and the speed adjust control is the input to the dynamic control section of the governor. The dynamic control circuit, of which the gain and stability adjustments are part, has a control function that will provide isochronous and stable performance for most engine types and fuel systems.
- The speed control unit circuit is influenced by the gain and stability performance adjustments. The governor system sensitivity is increased with clockwise rotation of the gain adjustment. The gain adjustment has a non-linear range of 33:1. The stability adjustment, when advanced clockwise, increases the time rate of response of the governor system to match the various time constants of a wide variety of engines. The speed control unit is a PID device, the “D”, derivative portion can be varied when required.(See Instability section.)
- During the engine cranking cycle, STARTING FUEL can be adjusted from an almost closed, to a nearly full fuel position. Once the engine has started, the speed control point is determined, first by the IDLE speed set point and the SPEED RAMPING circuit, After engine speed ramp- ing has been completed, the engine will be at its governed operating speed. At the desired governed engine speed, the actuator will be energized with sufficient current to maintain the desired engine speed, independent of load (isochronous operation).
- The output actuator current switching circuit provides current to drive the actuator. The output transistor is alternately switched off and on at a frequency of 300 Hz. which is well beyond the natural frequency of the actuator, hence no visible motion from the switching results. Switching the output transistors reduces its internal power dissipation for efficient power control. The output circuit can provide current of up to 10 amps continuous at 25 C for 24 VDC battery systems. The actuator responds to the average current to position the engine fuel control lever.
- In standard operation, the speed control unit performance is isochronous. Droop governing can be selected by connecting terminals K & L and the percent of droop governing can be varied with the droop adjustment control. The droop range can be decreased by connecting Terminals G and H.
- The speed control unit has several performance and protection features which enhance the governor system. A speed anticipation circuit minimizes speed overshoot on engine startup or when large increments of load are applied to the engine.

https://truckmanualshub.com/

5.1.3. Specification

- **Performance**

Isochronous operation / steady state stability ..... ± 0.25 % or better
Speed range / governor ..... 1 K ~ 7.5 K Hz continuous
Speed drift with temperature ..... ± 0.5 % maximum
Idle adjust CW ..... 60 % of set speed
Idle adjust CCW ..... less than 1,200 Hz
Droop range .....1-5 % regulation *
Droop adjust max. (K-L jumpered) ..... 450 Hz, ± 90 Hz per 1.0 A change
Droop adjust min. (K-L Jumpered) ..... 20 Hz, ± 8 Hz per 1.0 A change
Speed trim range..... ± 210 Hz
Remote variable speed range ..... 500 ~ 7.5 Hz or any part thereof
Terminal sensitivity

J.....100 Hz ± 15 Hz / Volt @ 6.0 K impendence
L ..... 680 Hz ± 50 Hz/Volt @ 165 K impendence
N.....135 Hz ± 10 Hz/Volt @ 1 MΩ impendence
P .....10 VCD supply @ 20 [mA] max.

- **Environmental**

Ambient operating temperature range ..... -40 ~ 85 °C
Relative humidity..... up to 95%
All surface finishes ..... fungus proof and corrosion resistant

- **Power input**

Supply ..... 24 VDC battery system (transient and reverse voltage protected)**
Polarity ..... negative ground (case isolated)
Power consumption ..... 50 [mA] continuous plus actuator current
Maximum controllable actuator current at 25 °C- (Inductive Load) .....10{A} continuous***
Magnetic speed sensor signal .....1 ~ 120[V] RMS

- **Reliability**

Vibration ..... 1G @ 20 ~ 100 Hz
Testing ..... 100 % functionally tested

- **Physical**

Dimensions ..... see outline (dia. 1)
Weight ..... 705 grams
Mounting ..... any position, vertical preferred

* Droop is based on a speed sensor frequency of 4,000 Hz. and an actuator current change of 1 amp from no load to full load. Applications with higher speed sensor signals will experience less percentage of droop. See droop description for specific details on operation of droop ranges.

** Protected against reverse voltage by a series diode. A 15 amp fuse must be installed in the positive battery lead.

*** Protected against short circuit to actuator (shuts off current to actuator), unit automatically turns back on when short is removed.

https://truckmanualshub.com/

5.1.4. DWG-2000 wiring and outline

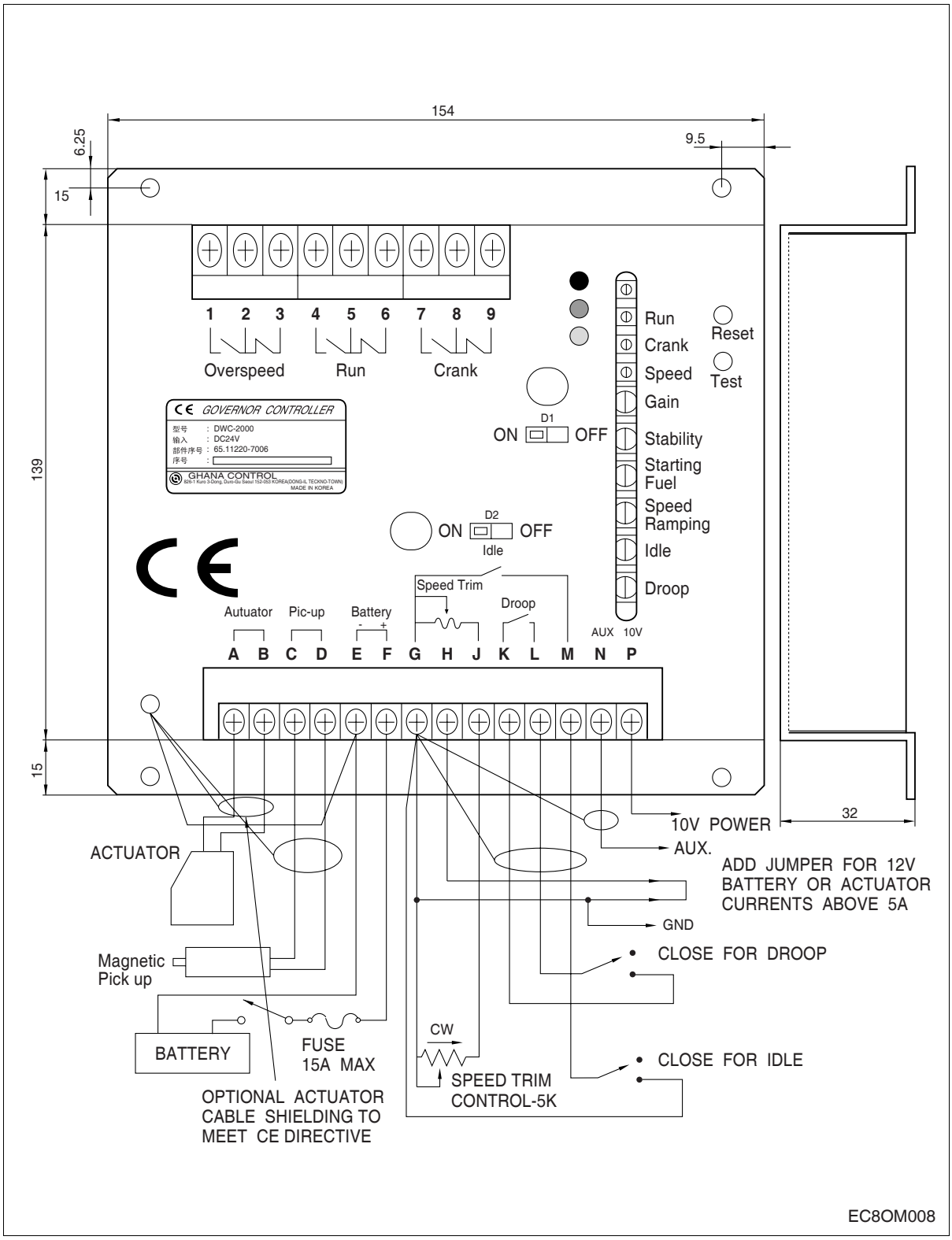

5.1.5. Application and installation information

- The speed control unit is rugged enough for mounting in a control cabinet or engine mounted enclosure or in a remote console up to 20 meters(65 ft.) from the engine. Care should be taken to insure that the speed control unit, mount it vertically so that condensation will not accumulate in the speed control unit.

WARNING :
An overspeed shutdown device, independent of the governor system, should be provided to prevent loss of engine control which may cause personal injury or equipment damage. Do not rely exclusively on the governor system electric actuator to prevent over speed. A Secondary shutoff device, such as a fuel solenoid must be used.

5.1.6. Wiring

- Wiring to the speed control unit should be as shown in Diagram 1. Wire leads to the battery and actuator from the speed control unit terminals A, B, E and F should be #16 AWG(1.3 mm sq.) or larger. Long cables require an increased wire size to minimize voltage drops. An external 15 amp fuse is recommended in series with terminal F, the positive (+) battery input terminal.
- The magnetic speed sensor leads must be twisted and/or shielded for their entire length. If shielded cables are used, connect all the shields to terminal D only. The shield should be insulated to insure no other part of the shield comes in contact with engine ground, otherwise stray speed signals may be introduced to the speed control unit. With the engine stopped, adjust the gap between the magnetic speed sensor and the ring gear teeth. The gap should not be any smaller than 0.020 in (0.45 mm). Usually, gear tooth will achieve a satisfactory air gap. The magnetic speed sensor voltage should be at least 1 VAC RMS during cranking.

5.1.7. Adjustments

- **Before starting engine**
  Confirm the following adjustment positions. The adjustments are factory pre-set as follows :
  Check to insure the GAIN and STABILITY adjustments, and if applied, the external SPEED TRIM CONTROL are set to mid position.

- **Preset the DWC-2000 as follows :**

Gain	Minimum CCW
Stability	Mid-range
Speed adjust	3,650 Hz
Idle	1,950 Hz
Droop	Maximum CCW (Minimum setting)
Over speed	Maximum CW
Run ramp	Maximum CW
Crank ramp	Maximum CW
Starting fuel	Full CW (Maximum fuel)
Speed ramping	Full CCW (Fastest)

https://truckmanualshub.com/

- **Start engine**

  The speed control unit governed speed setting is factory set at approximately engine idle speed. Crank the engine with DC power applied to the governor system. The actuator will energize to the maximum fuel position until the engine starts. The governor system should control the engine at a low idle speed. If the engine is unstable after starting, turn the GAIN and STABILITY adjustments counterclockwise until the engine is stable.

- **Governor speed setting**

  The governed speed set point is increased by clockwise rotation of the SPEED adjustment control. Remote speed adjustment can be obtained with an optional 5 K Speed Trim Control.
  (See Diagram 1.)

- **Governor performance**

  Once the engine is at operating speed and at no load, the following governor performance adjustment can be made.

  (1) At no load, turn the gain control CW until instability results. Then back-off slightly CCW (1/8 turn) beyond the point where stability returns.
  (2) Turn the stability control CW until instability results. Then back-off slightly CCW (1/8 turn) beyond the point where stability returns. Excellent performance should result from these adjustments.

  If instability cannot be corrected or further performance improvements are required, refer to the section on SYSTEM TROUBLESHOOTING.

- **Starting fuel adjustment**

  The engine's exhaust smoke at start-up can be minimized by completing the following adjustments.

  (1) Place the engine in idle by connecting Terminals M & G.
  (2) Adjust the IDLE speed for as low a speed setting as the application allows.
  (3) Adjust the STARTING FUEL CCW until the engine speed begins to fall. Increase the STARTING FUEL slightly so that the idle speed is returned to the desired level.
  (4) Stop the engine

https://truckmanualshub.com/

- **One of two methods of operation for the DWC-2000 may now be selected**

Method 1 : Start the engine and accelerate directly to the operating speed(Gen Sets, etc.). Remove the connection between Terminals M & G. Start the engine and adjust the SPEED RAMPING for the least smoke on acceleration from idle to rated speed. If the starting smoke is excessive, the STARTING FUEL may need to be adjusted slightly CCW. If the starting time is too long, the STARTING FUEL may need to be adjusted slightly CW

Method 2 : Start the engine and control at an idle speed for a period of time prior to accelerating to the operating speed. This method separates the starting process so that each may be optimized for the lowest smoke emissions.
Replace the connection between Terminals M & G with a switch, usually an oil pressure switch. Start the engine. If the starting smoke is excessive, the STARTING FUEL may need to be adjusted slightly CCW. If the starting time is too long, the STARTING FUEL may need to be adjusted slightly CW.
When the switch opens, adjust the SPEED RAMPING for the least amount of smoke when accelerating from idle speed to rated speed.

- **Idle speed setting**

If the IDLE speed setting was not adjusted as detailed in “Starting Fuel Adjustment” section, then place the optional external selector switch in the IDLE position. The idle speed set point is increased by clockwise rotation of the IDLE adjustment control. When the engine is at idle speed, the speed control unit applies droop to the governor system to insure stable operation.

- **Speed droop operation**

Droop is typically used for the paralleling of engine driven generators.
Place the optional external selector switch in the DROOP position, DROOP is increased by clockwise rotation of the DROOP adjustment control. When in droop operation, the engine speed will decrease as engine load increases.
The percentage of droop is based on the actuator current change from engine no load to full load. A wide range of droop is available with the internal control. Droop level requirements above 10 % are unusual.

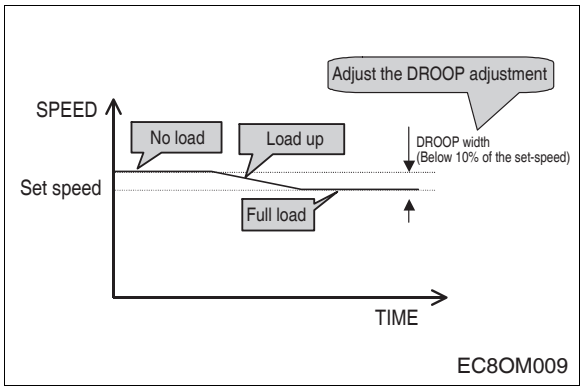

If droop levels experienced are higher or lower than those required, contact the factory for assistance.
After the droop level has been adjusted, the rated engine speed setting may need to be reset. Check the engine speed and adjust the speed setting accordingly.

https://truckmanualshub.com/

- **Accessory input**

  The Auxiliary Terminal N accepts input signals from load sharing units, auto synchronizers, and other governor system accessories, DWC accessories are directly connected to this terminal. It is recommended that this connection from accessories be shielded as it is a sensitive input terminal.
  If the auto synchronizer is used alone, not in conjunction with a load sharing module, a 3M ohm resistor should be connected between Terminals N and P. This is required to match the voltage levels between the speed control unit and the synchronizer.
  When an accessory is connected to Terminal N, the speed will decrease and the speed adjustment must be reset.
  When operating in the upper end of the control unit frequency range, a jumperwire or frequency trim control may be required between Terminals G and J. This increases the frequency range of the speed control to over 7,000 Hz.

- **Accessory supply**

  The +10 volt regulated supply, Terminal P, can be utilized to provide power to DWC- 2000 governor system accessories. Up to 20ma of current can be drawn from this supply. Ground reference is Terminal G. Caution : a short circuit on this terminal can damage the speed control unit.

- **Wide range remote variable speed operation**

  Simple and effective remote variable speed can be obtained with the DWC-2000 Series control unit. A single remote speed adjustment potentiometer can be used to adjust the engine speed continuously over specific speed range. Select the desired speed range and the corresponding potentiometer value.(Refer to table) If the exact range cannot be found, select the next higher range potentiometer. An additional fixed resistor may be placed across the potentiometer to obtain the exact desired range. Connect the speed range potentiometer as shown.
  To maintain engine stability at the minimum speed setting, a small amount of droop can be added using the DROOP adjustment. At the maximum speed setting the governor performance will be near isochronous, regardless of the droop adjustment setting.

<Variable speed range potentiometer value>

Speed range	Potentiometer value
900 Hz	1 k
2,400 Hz	5 k
3,000 Hz	10 k
3,500 Hz	25 k
3,700 Hz	50 k

- **OVERSPEED shutdown setting**

  DWC-2000 has a Test switch to determine the OVERSPEED set point and test the engine shutdown function. If you want to adjust the OVERSPEED set point at the speed about 10 % higher than the RUN set speed, use the Test switch. When the engine is operating at the Run set speed in pushing the Test switch, rotate the Overspeed Adjust. by CCW until the Overspeed shutdown function is operated. When the Test switch is pushed, the Overspeed set point is reduced to 10/11 of the real set point.

- **RUN ramp turn-On speed setting**

  When the engine is operating at the Run set speed, adjust the Run lamp adjustment CCW until the lamp is on. Then, more rotate 1/2 turn by CCW.

- **CRANK ramp turn-on speed setting**

  When the engine is operating at the Idle set speed(800 rpm), adjust the Crank lamp adjustment CCW until the lamp is on. Then, more rotate 1.5 turns by CCW.

5.1.8. System troubleshooting

- **System Inoperative**

  If the engine governing system does not function, the fault may be determined by performing the voltage tests described in steps 1,2,3 and 4. (+) and (–) refer to meter polarity. Should normal values be indicated as a result of following the trouble shooting steps, the fault may be with the actuator or the wiring to the actuator. See the actuator publication for testing details.

Step	Terminals	Normal value	Probable cause of abnormal reading
1	F(+) & E(-)	Battery supply voltage(24V)	1. DC battery power not connected. Check for blown fuse. 2. Low battery voltage. 3. Wiring error.
2	C & D	1.0 VAC RMS min., while cranking	1. Gap between speed sensor and gear teeth too great. Check gap. 2. Improper or defective wiring to the speed sensor. Resistance between terminals C and D should be 30 to 1,200 ohms 3. Defective speed sensor.
3	P(+) & G(-)	10 VDC internal supply	1. Short on terminal P. (This will cause a defective unit.) 2. Defective speed control.
4	F(+) & A(-)	1.0 – 2.0 VDC while cranking	1. SPEED adjustment set too low. 2. Short / open in actuator wiring. 3. Defective speed control. 4. Defective actuator. See actuator troubleshooting.

https://truckmanualshub.com/

- **Unsatisfactory performance**

If the governing system functions poorly, perform the following tests.

Symptom	Test	Probable fault
Engine overspeeds.	Do not crank. Apply DC power to the governor system.	Actuator goes to full fuel. then, disconnect speed sensor at terminals C & D. – If actuator still at full fuel → speed control unit defective. – If actuator at minimum fuel position → errorneous speed signal. Check speed sensor data.
	Manually hold the engine at the desired running speed. Measure the DC voltage between terminals A(-) & F(+) on the speed control unit.	1. If the voltage reading is 4.0 to 6.0 VDC. a) SPEED adjustment set above desired speed. b) Defective speed control unit. 2. If the voltage reading is above 6.0 VDC. a) Actuator or linkage binding. 3. If the voltage reading is below 4.0 VDC. 4. Gain set too low.
Actuator does not energize fully.	Measure the voltage at the battery while cranking.	If the voltage is less than 15 V for a 24 V system, replace the battery if it is weak or undersized.
	Momentarily connect terminals A and F. The actuator should move to the full fuel position.	1. Actuator or battery wiring in error. 2. Actuator or linkage binding. 3. Defective actuator. See actuator troubleshooting. 4. Fuse opens. Check for short in actuator or actuator wiring harness.
Engine remains below desired governed speed.	Measure the actuator output. Terminals A & B, while running under governor control.	1. If voltage measurement is within approximately 3 volts of the battery supply voltage, then fuel control restricted from reaching full fuel position. Possibly due to interference from the mechanical governor, carburetor spring or linkage alignment. 2. Speed setting too low.

- **Insufficient magnetic speed sensor signal**

A strong magnetic speed sensor signal will eliminate the possibility of missed or extra pulses. The speed control unit will govern well with 0.5 volts RMS speed sensor signal. A speed sensor signal of 3 volts RMS or greater at governed speed is recommended. Measurement of the signal is made at Terminals C and D.

The amplitude of the speed sensor signal can be raised by reducing the gap between the speed sensor tip and the engine rind gear. The gap should not be any smaller than 0.020 in (0.45 mm). When the engine is stopped, back the speed sensor out by 3/4 turn after touching the ring gear tooth to achieve a satisfactory air gap.

- **Electromagnetic compatibility (EMC)**

  EMI SUSCEPTIBILITY - The governor system can be adversely affected by large inter – fering signals that are conducted through the cabling or through direct radiation into the control circuits.
  All DWC-2000 speed control units contain filters and shielding designed to protect the units sensitive circuits from moderate external interfering sources.
  Although it is difficult to predict levels of interference, applications that include magnetos, solid state ignition systems, radio transmitters, voltage regulators or battery chargers should be considered suspect as possible interfering sources.
  If it is suspected that external fields, either those that are radiated or conducted, are or will affect the governor systems operation, it is recommended to use shielded cable for all including the speed sensor shield, is connected to a single point on the case of the speed control unit. Mount the speed control unit to a grounded metal back plate or place it in a sealed metal box.
  Conduction is when the interfering signal is conducted through the interconnecting wiring to the governor system electronics. Shielded cables and installing filters are common remedies.
  As an aid to help reduce the levels of EMI of a conductive nature, a battery line filter and shielded cables are conveniently supplied by DWC.

- **Instability**

  Instability in a closed loop speed control system can be categorized into two general types. PERIODIC appears to be sinusoidal and at a regular rate. NON-PERIODIC is a random wandering or an occasional deviation from a steady state band for no apparent reason.
  Switch D1 controls the Differential function. When the position of switch D1 is “ON”, the function is operated. Move the switch to the “OFF” position if there is fast instability in the system.
  The PERIODIC type can be further classified as fast or slow instability. Fast instability is a 3 Hz. or faster irregularity of the speed and is usually a jitter. Slow periodic instability is below 3 Hz., can be very slow, and is sometimes violent.
  If fast instability occurs, this is typically the governor responding to engine firings. Raising the engine speed increases the frequency of instability and vice versa. In this case, placing switch D1 in the “OFF” position will reduce the speed control unit’s sensitivity to high frequency signals. Should instability still be present, placing switch D2 to the “OFF” position may help stabilize the engine. Again, readjust the GAIN and STABILITY for optimum control.
  Interference from powerful electrical signals can also be the cause. Turn off the battery chargers or other electrical equipment to see if the system disappears.
  Slow instability can have many causes. Adjustment of the GAIN and STABILITY usually cures most situations by matching the speed control unit dynamics. If slow instability is unaffected by this procedure, evaluate the fuel system and engine performance. Check the fuel system linkage for binding, high friction, or poor linkage. Be sure to check linkage during engine operation. Also look at the engine fuel system. Irregularities with carburetion or fuel injection systems can change engine power with a constant throttle setting. This can result in speed deviations beyond the control of the governor system. Adding a small amount of droop can help stabilize the system for troubleshooting.
  NON-PERIODIC instability should respond to the GAIN control. If increasing the gain reduces the instability, then the problem is probably with the engine.
  Higher gain allows the governor to respond faster and correct for disturbance. Look for engine mis-firings, an erratic fuel system, or load changes on the engine generator set voltage regulator. If the throttle is slightly erratic, but performance is fast, move switch D1 to the “OFF” position. This will tend to steady the system.

https://truckmanualshub.com/

5.1.9. Injection pump calibration

1) P158LE series engine

(1) Injection pump : 65.11101-7301 (0 402 618 813 BOSCH)
- – Model : PE8P120A500/4LS7935 (0 412 628 937)
- – Governor : Ghana control(DWA-2000)
- – Plunger & barrel : 2 418 455 545
- – Delivery valve : 2 418 559 045
- – Feed pump : FP/KD22P78-2 (0 440 008 152)
- – Prestroke : 4.5 ± 0.05 mm at 13 ± 1.5 mm

(2) Nozzle holder assembly : 65.10101-7051 (0 432 131 667)/65.10101-7053(0 432 131 669)

(3) Nozzle : 65.10102-6047 (0 433 171 174)/65.10102-6070(0 433 171 169)

(4) Injection pipe : 65.10301-6053A, 65.10301-6054A

(5) Injection order : 1 – 5 – 7 – 2 – 6 – 3 – 4 – 8

(A) Test condition for injection pump	Nozzle & holder ass'y	1 688 901 105	Opening pressure : 208.5 ± 1.5 bar
	Injection pipe (ID ,OD ,L)	–	∅3.0 × ∅8.0 – 600 mm
	Test oil	ISO4113	Temperature : 40 ± 5 °C
(B) Engine standard parts	Nozzle & holder ass'y	65.10101-7051	Nozzle (4 × ∅0.40)
			285 kg/cm^2
	Injection pipe(ID, OD ,L)	65.10301-6053 65.10301-6054	∅2 × ∅6 – 650 mm

Rack diagram and setting valve at each point

	Check point	Rack position (mm)	Pump speed (rpm)	Injection Q'ty on RIG (mm^3 / 1,000 st)		Press. (mmHg)
				(A) Test condition for inj. pump	(B) Engine standard parts	
Standby power	A	12.6	700	304 ± 3	–	–
	–	–	–	–	–	–
	–	–	–	–	–	–
	–	–	–	–	–	–
	–	–	–	–	–	–
	Boost pressure : zero boost					

https://truckmanualshub.com/

2) P180LE series engine

(1) Injection pump : 65.11101-7302 (0 402 619 802 BOSCH)
- Model : PE10P120A500LS7936 (0 412 629 815)
- Governor : Ghana Control (DWA-2000)
- Plunger & barrel : 2 418 455 545
- Delivery valve : 2 418 559 045
- Feed pump : FP/KD22P80-1 (0 440 008 090)
  FP/KD22P78-2 (0 440 008 152)
- Prestroke : 4.5 ± 0.05 mm at 13 ± 1.5 mm

(2) Nozzle holder assembly : 65.10101-7051 (0 432 131 667)/65.10101-7053(0 432 131 669)

(3) Nozzle : 65.10102-6047 (0 433 171 174)/65.10102-6070(0 433 171 169)

(4) Injection pipe : 65.10301-6055B, 65.10301-6056B

(5) Injection order : 1 – 6 – 5 – 10 – 2 – 7 – 3 – 8 – 4 – 9

(A) Test condition for injection pump	Nozzle & holder ass'y	1 688 901 105	Opening pressure : 208.5 ± 1.5 bar
	Injection pipe (ID ,OD ,L)	–	∅3.0 × ∅8.0 – 600 mm
	Test oil	ISO4113	Temperature : 40 ± 5 °C
(B) Engine standard parts	Nozzle & holder ass'y	65.10101-7051	Nozzle (4 × ∅0.40)
			285 kg/cm^2
	Injection pipe(ID, OD ,L)	65.10301-6055 65.10301-6056	∅2 × ∅6 – 750 mm

Rack diagram and setting valve at each point

	Check point	Rack position (mm)	Pump speed (rpm)	Injection Q'ty on RIG (mm^3 / 1,000 st)		Press. (mmHg)
				(A) Test condition for inj. pump	(B) Engine standard parts	
Standby power	A	12.6	700	304 ± 3	–	–
	–	–	–	–	–	–
	–	–	–	–	–	–
	–	–	–	–	–	–
	–	–	–	–	–	–
	Boost pressure : zero boost					

https://truckmanualshub.com/

3) P222LE series engine

(1) Injection pump : 65.11101-7303 (0 402 610 807 BOSCH)
- Model : PE12P120A500LS7937 (0 412 620 854)
- Governor : Ghana control(DWA-2000)
- Plunger & barrel : 2 418 455 545
- Delivery valve : 2 418 559 045
- Feed pump : FP/KD22P80-1 (0 440 008 090)
  FP/KD22P78-2 (0 440 008 152)
- Prestroke : 4.5 ± 0.05 mm at 13 ± 1.5 mm

(2) Nozzle holder assembly : 65.10101-7051 (0 432 131 667)/65.10101-7053(0 432 131 669)

(3) Nozzle : 65.10102-6047 (0 433 171 174)/65.10102-6070(0 433 171 169)

(4) Injection pipe : 65.10301-6113, 65.10301-6114A

(5) Injection order : 1 – 12 – 5 – 8 – 3 – 10 – 6 – 7 – 2 – 11 – 4 – 9

(A) Test condition for injection pump	Nozzle & holder ass'y	1 688 901 105	Opening pressure : 208.5 ± 1.5 bar
	Injection pipe (ID ,OD ,L)	–	∅3.0 × ∅8.0 – 600 mm
	Test oil	ISO4113	Temperature : 40 ± 5 °C
(B) Engine standard parts	Nozzle & holder ass'y	65.10101-7051	Nozzle (5 × ∅0.26)
			285 kg/cm^2
	Injection pipe(ID, OD ,L)	65.10301-6057 65.10301-6058	∅2 × ∅6 – 750 mm

Rack diagram and setting valve at each point

	Check point	Rack position (mm)	Pump speed (rpm)	Injection Q'ty on RIG (mm^3 / 1,000 st)		Press. (mmHg)
				(A) Test condition for inj. pump	(B) Engine standard parts	
Standby power	A	12.6	700	304 ± 3	–	–
	–	–	–	–	–	–
	–	–	–	–	–	–
	–	–	–	–	–	–
	–	–	–	–	–	–
	Boost pressure : zero boost					

4) PU158TI engine

(1) Injection pump : 65.11101-7680 (A 401 881 102 BOSCH)
- – Model : PE8P120A520/4LS7947 (0 412 628 942)
- – Governor : RQV250…900PA1434(0 440 008 152)
- – Plunger & barrel : 2 418 455 188
- – Delivery valve : 2 418 552 039
- – Feed pump : FP/KD22P78-2 (0 440 008 152)
- – Prestroke : 4.5 ± 0.05 mm

(2) Nozzle holder assembly : 65.10101-7053 (0 432 131 669)

(3) Nozzle : 65.10102-6070 (0 433 171 169)

(4) Injection pipe : 65.10301-6053A, 65.10301-6054A

(5) Injection order : 1 – 5 – 7 – 2 – 6 – 3 – 4 – 8

(A) Test condition for injection pump	Nozzle & Holder Ass'y	1 688 901 019	Opening pressure : 212.6 bar
	Injection pipe(OD ,ID ,L)	1 680 750 075	∅8.0 x ∅3.0 – 1,000 mm
	Test oil	ISO4113	Temperature :40 ± 2 °C
(B) Engine standard parts	Nozzle & holder Ass'y	65.10101-7053	Nozzle (5 x ∅0.418)
		0 432 131 669	Spec. : 285.5 bar
	Injection pipe (OD, ID, L)		∅6 x ∅2 – 750 mm

Rack diagram and setting valve at each point

	Check Point	Rack position (mm)	Pump Speed (rpm)	Injection Q'ty on RIG (mm^3 / 1,000st)		Press. (mmHg)
				(A) Test condition for inj. Pump	(B) Engine standard parts	
Refer to (3) Rack Diagram	V1	12.00 ± 0.05	1,050	266.0 ± 3.0	Max. power	1,500
	V2	12.00 ± 0.10	800	266.0 ± 3.0	–	1,500
	VS	8.96 ± 0.20	500	159.8 ± 1.0	–	0
	LQ	6.15 ± 0.20	350	53.7 ± 15.0	Only 2/3/4/8	0
	A3	7.10 ± 0.50	1,150	109.4 ± 15.0	Only 2/3/4/8	0
	ST	with Cap	100	127.5 ± 10.0	Only 2/3/4/8	0

Boost pressure dependent full –load stop (boost compensator spring operation point)

	Check point	Rack Position (mm)	Pump speed (rpm)	Injection Q'ty on RIG (mm^3 / 1,000st)		Press. (mmHg)
				(A) Test condition for inj. Pump	(B) Engine standard parts	
Refer to (4) Boost pressure	P1	12.00 ± 0.05	500	–	–	1,500
	P2	8.96 ± 0.05	500	–	–	0
	P3	9.25 ± 0.10	500	–	–	275
	P4	11.20 ± 0.05	500	–	–	600

Weight	Weight =630 g	Lever ratio(min/max)	Not fixed
Idle spring	k=14.03 N/mm	Plunger	∅12
Middle spring	k=57.14 N/mm	Delivery valve retraction volume	90 mm^3/st
Inner spring	k=21.98 N/mm	Delivery valve opening pressure	–
LDA spring	k=30.5 N/mm	Delivery valve spring	k = 7.2 N/mm
Feed Pump	Double action	Timer	None

https://truckmanualshub.com/

(6) Rack diagram

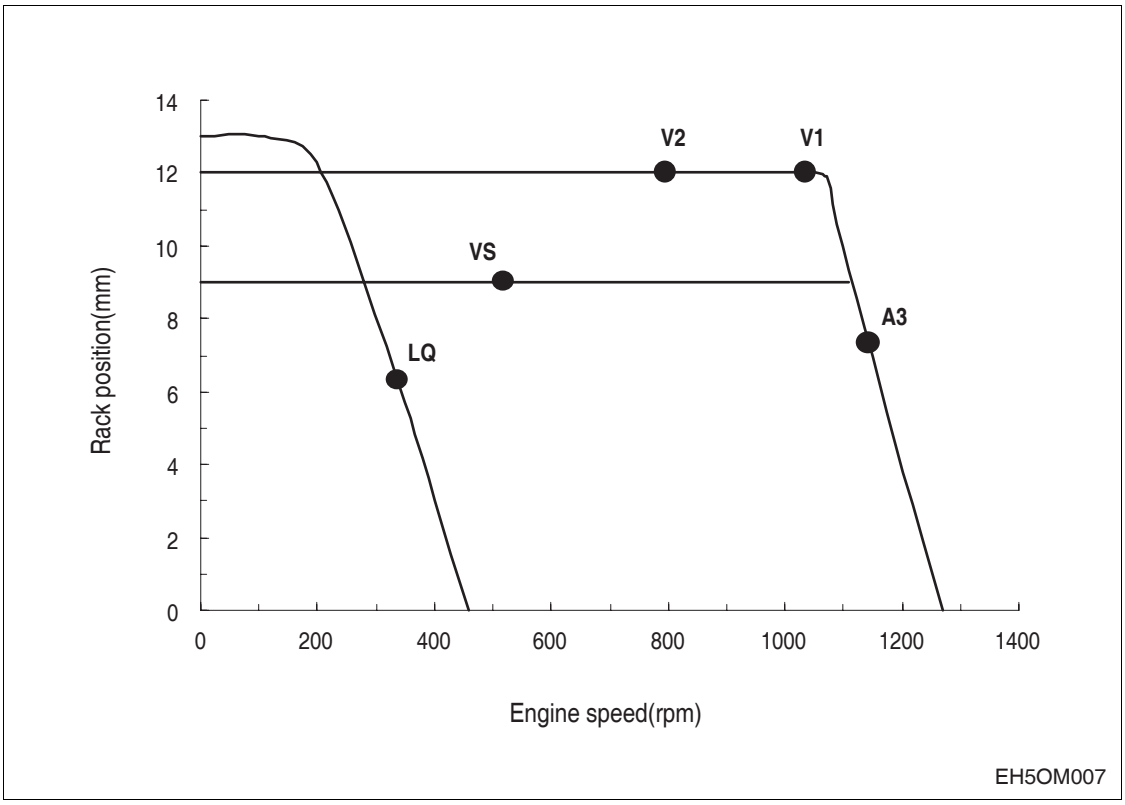

(7) Boost compensator pressure

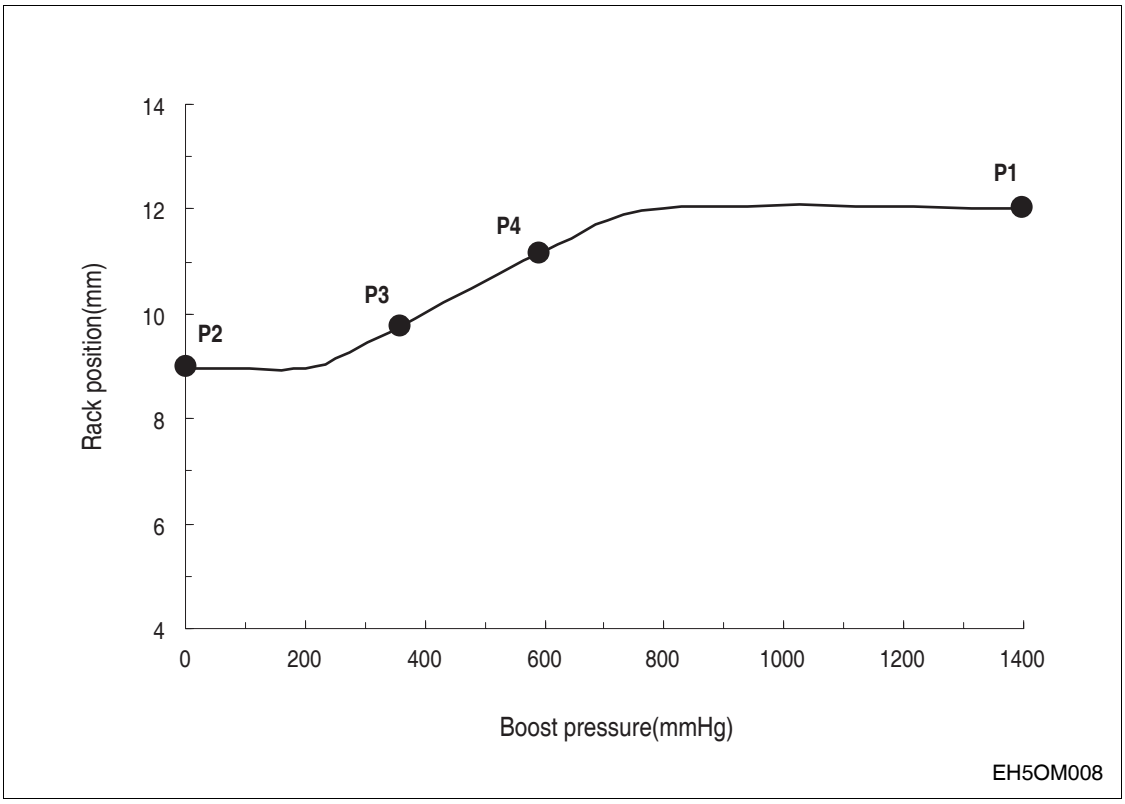

5) PU180TI engine

(1) Injection pump : 65.11101-7681 (A 401 890 895 BOSCH)
- Model : PE10P120A520LS7948 (0 412 629 816)
- Governor : RQV250…900PA1434
- Plunger & barrel : 2 418 455 188
- Delivery valve : 2 418 552 039
- Feed pump : FP/KD22P80-1 (0 440 008 090)
  FP/KD22P78-2 (0 440 008 152)
- Prestroke : 4.5 ± 0.05 mm

(2) Nozzle holder assembly : 65.10101-7053 (0 432 131 669)

(3) Nozzle : 65.10102-6070 (0 433 171 169)

(4) Injection pipe : 65.10301-6055B, 65.10301-6056B

(5) Injection order : 1 – 6 – 5 – 10 – 2 – 7 – 3 – 8 – 4 - 9

(A) Test condition for injection pump	Nozzle & Holder Ass'y	1 688 901 019	Opening pressure : 212.6 bar
	Injection pipe(OD ,ID ,L)	1 680 750 075	∅8.0 x ∅3.0 – 1,000 mm
	Test oil	ISO4113	Temperature :40 ± 2 °C
(B) Engine standard parts	Nozzle & holder Ass'y	65.10101-7053	Nozzle (5 x ∅0.418)
		0 432 131 669	Spec. : 285.5 bar
	Injection pipe (OD, ID, L)		∅6 x ∅2 – 750 mm

Rack diagram and setting valve at each point

	Check Point	Rack position (mm)	Pump Speed (rpm)	Injection Q'ty on RIG (mm^3 / 1,000st)		Press. (mmHg)
				(A) Test condition for inj. Pump	(B) Engine standard parts	
Refer to (3) Rack Diagram	V1	11.55 ± 0.05	1,050	243.0 ± 3.0	Max. power	1,500
	V2	11.55 ± 0.10	800	240.4 ± 3.0	–	1,500
	VS	8.96 ± 0.20	500	159.8 ± 1.0	–	0
	LQ	6.15 ± 0.20	350	53.7 ± 15.0	Only 2/3/4/8	0
	A3	7.10 ± 0.50	1,150	109.4 ± 15.0	Only 2/3/4/8	0
	ST	with Cap	100	127.5 ± 10.0	Only 2/3/4/8	0

Boost pressure dependent full –load stop (boost compensator spring operation point)

	Check point	Rack Position (mm)	Pump speed (rpm)	Injection Q'ty on RIG (mm^3 / 1,000st)		Press. (mmHg)
				(A) Test condition for inj. Pump	(B) Engine standard parts	
Refer to (4) Boost pressure	P1	11.55 ± 0.05	500	–	–	1,500
	P2	8.96 ± 0.05	500	–	–	0
	P3	9.9 ± 0.10	500	–	–	275
	P4	10.90 ± 0.05	500	–	–	450

Weight	Weight =630 g	Lever ratio(min/max)	Not fixed
Idle spring	k=14.03 N/mm	Plunger	∅12
Middle spring	k=57.14 N/mm	Delivery valve retraction volume	90 mm^3/st
Inner spring	k=21.98 N/mm	Delivery valve opening pressure	–
LDA spring	k=30.5 N/mm	Delivery valve spring	k = 7.2 N/mm
Feed Pump	Double action	Timer	None

https://truckmanualshub.com/

(6) Rack diagram

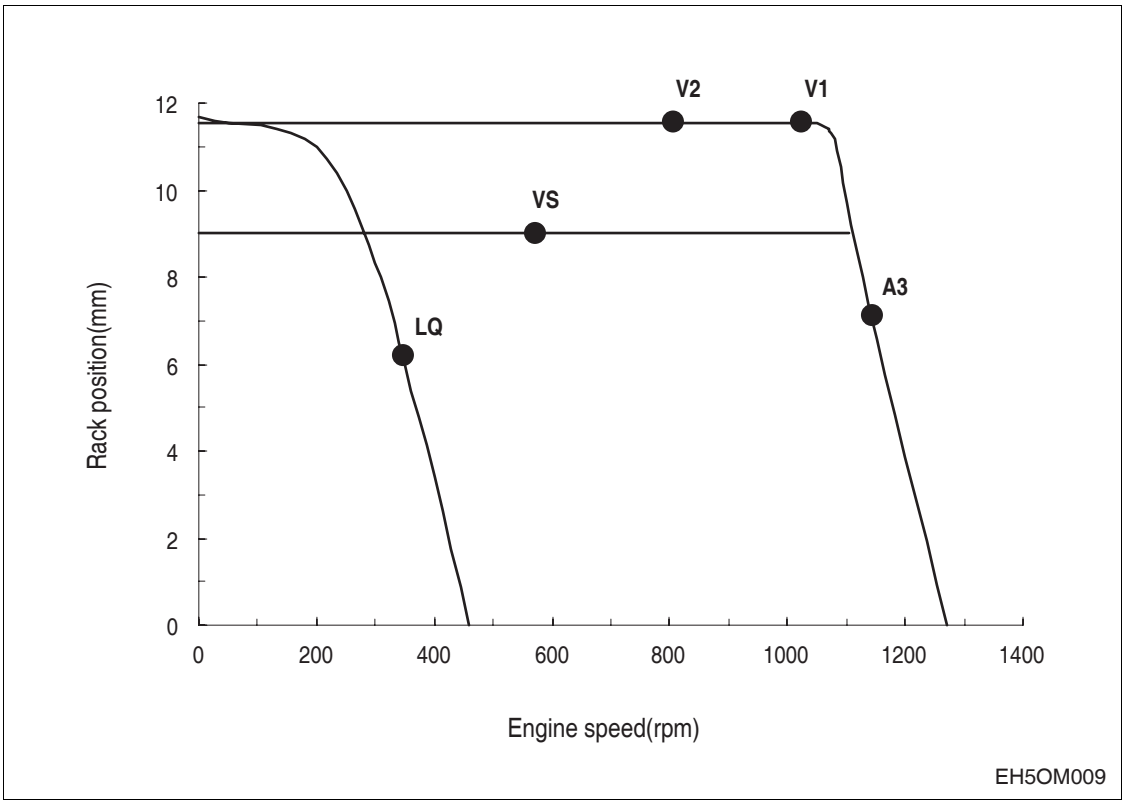

(7) Boost compensator pressure

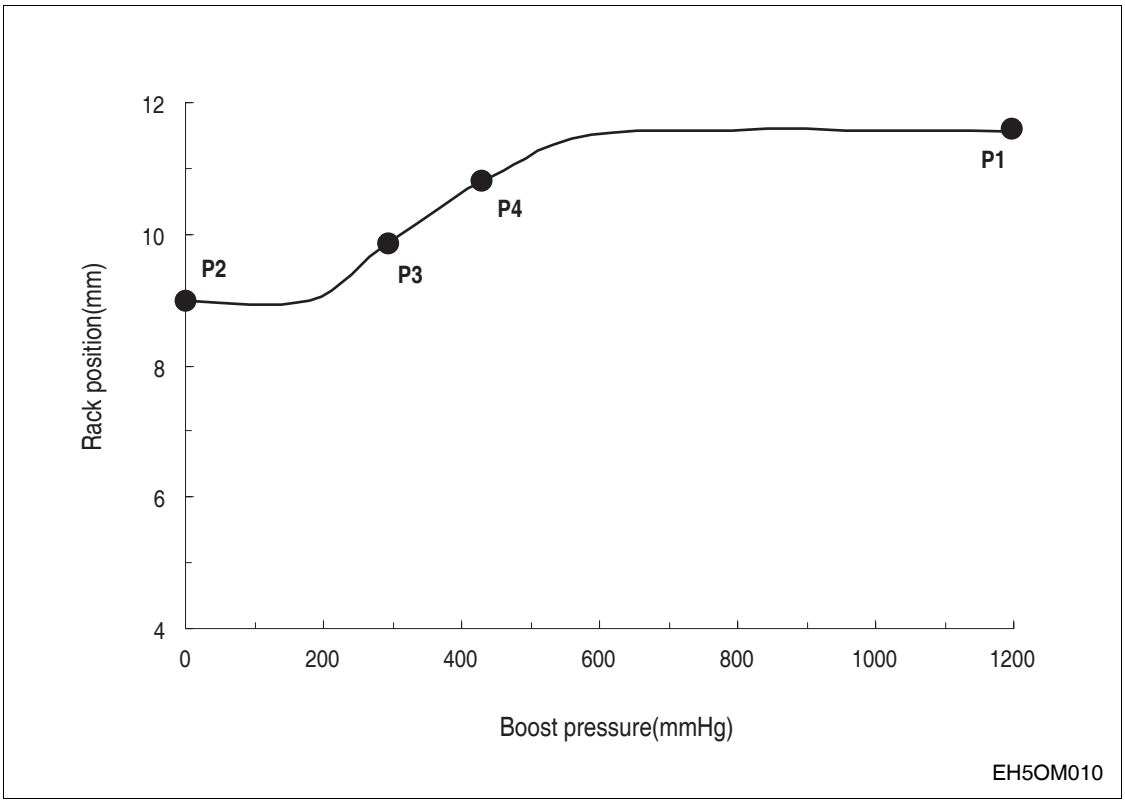

6) PU222TI engine

(1) Injection pump : 65.11101-7319 (0 401 890 979E BOSCH)
- – Model : PE12P120A520LS7972 (0 412 620 869)
- – Governor : RQV250…900PA1434
- – Plunger & barrel : 2 418 455 545
- – Delivery valve : 2 418 559 045
- – Feed pump : FP/KD22P78-1 (0 440 008 090)
  FP/KD22P78-2 (0 440 008 152)
- – Prestroke : 4.08 ± 0.05 mm

(2) Nozzle holder assembly : 65.10101-7053 (0 432 131 669)

(3) Nozzle : 65.10102-6070 (0 433 171 169)

(4) Injection pipe : 65.10301-6113, 65.10301-6114A

(5) Injection order : 1 – 12 – 5 – 8 – 3 – 10 – 6 – 7 – 2 – 11 – 4 – 9

(A) Test condition for injection pump	Nozzle & Holder Ass'y	1 688 901 019	Opening pressure : 212.6 bar
	Injection pipe(OD ,ID ,L)	1 680 750 075	∅8.0 x ∅3.0 – 1,000 mm
	Test oil	ISO4113	Temperature :40 ± 2 °C
(B) Engine standard parts	Nozzle & holder Ass'y	65.10101-7053	Nozzle (5 x ∅0.418)
		0 432 131 669	Spec. : 285.5 bar
	Injection pipe (OD, ID, L)		∅6 x ∅2 – 750 mm

Rack diagram and setting valve at each point

	Check Point	Rack position (mm)	Pump Speed (rpm)	Injection Q'ty on RIG (mm^3 / 1,000st)		Press. (mmHg)
				(A) Test condition for inj. Pump	(B) Engine standard parts	
Refer to (3) Rack Diagram	V1	12.00 ± 0.05	1,050	266.0 ± 3.0	Max. power	1,500
	V2	12.00 ± 0.10	800	266.0 ± 3.0	–	1,500
	VS	8.96 ± 0.20	500	159.8 ± 1.0	–	0
	LQ	6.15 ± 0.20	350	53.7 ± 15.0	Only 2/3/4/8	0
	A3	7.10 ± 0.50	1,150	109.4 ± 15.0	Only 2/3/4/8	0
	ST	with Cap	100	127.5 ± 10.0	Only 2/3/4/8	0

Boost pressure dependent full –load stop (boost compensator spring operation point)

	Check point	Rack Position (mm)	Pump speed (rpm)	Injection Q'ty on RIG (mm^3 / 1,000st)		Press. (mmHg)
				(A) Test condition for inj. Pump	(B) Engine standard parts	
Refer to (4) Boost pressure	P1	12.00 ± 0.05	500	–	–	1,500
	P2	8.96 ± 0.05	500	–	–	0
	P3	9.25 ± 0.10	500	–	–	275
	P4	11.20 ± 0.05	500	–	–	600

Weight	Weight =630 g	Lever ratio(min/max)	Not fixed
Idle spring	k=14.03 N/mm	Plunger	∅12
Middle spring	k=57.14 N/mm	Delivery valve retraction volume	90 mm^3/st
Inner spring	k=21.98 N/mm	Delivery valve opening pressure	–
LDA spring	k=30.5 N/mm	Delivery valve spring	k = 7.2 N/mm
Feed Pump	Double action	Timer	None

https://truckmanualshub.com/

(6) Rack diagram

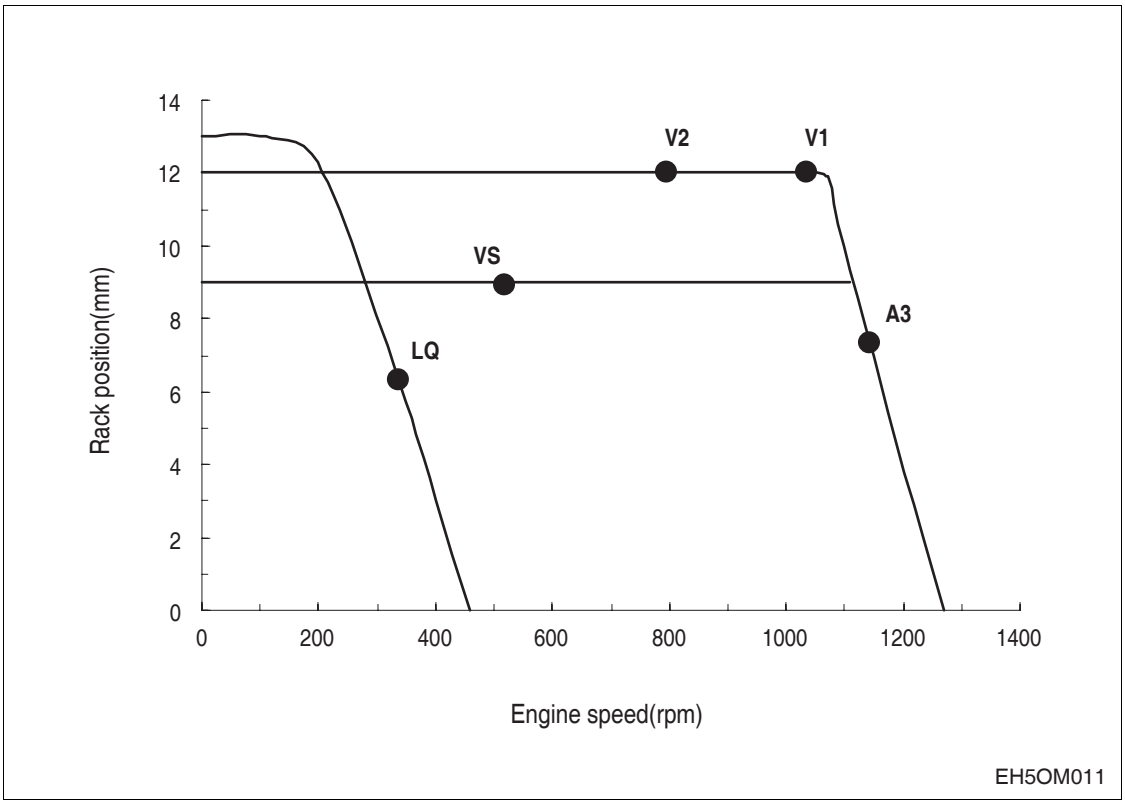

(7) Boost compensator pressure

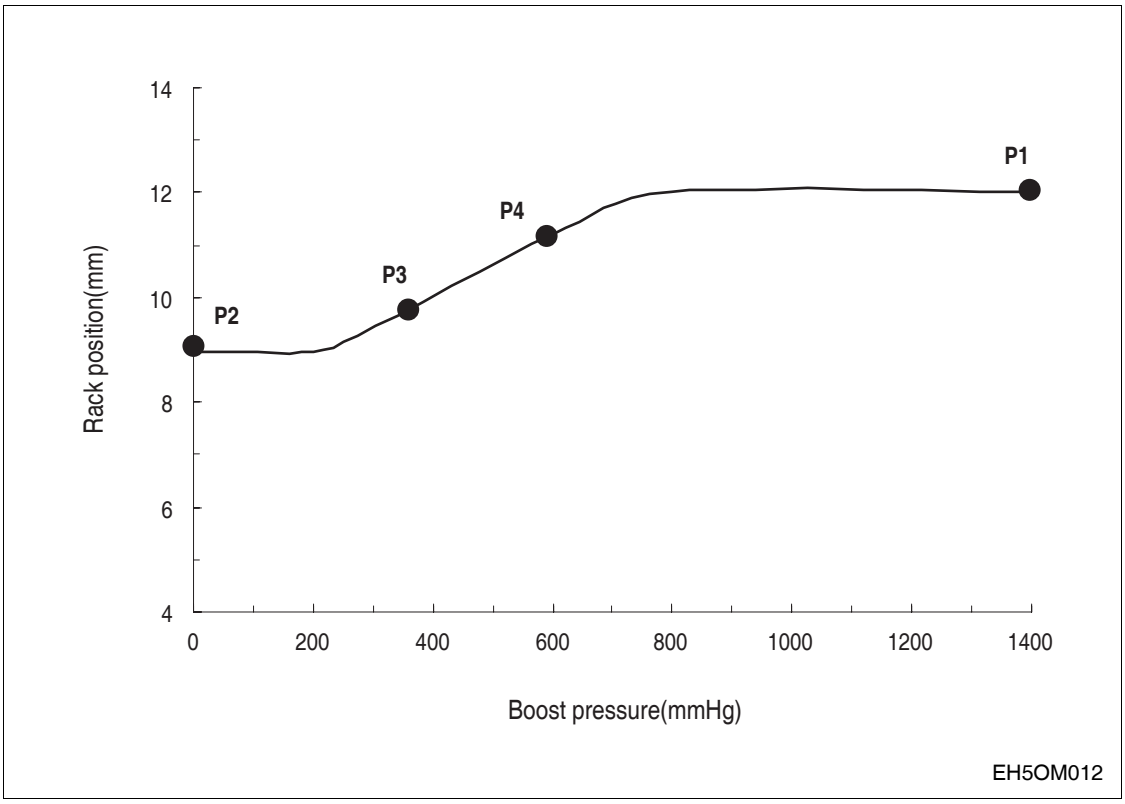

https://truckmanualshub.com/

5.2. Cooling System

5.2.1. General information

This engine is water-cooling type. Heat from the combustion chamber and engine oil heat are cooled down by coolant and radiated to the outside, resulting in the normal operation of the engine.

Looking into the cooling system, the water pumped up by the water pump circulates around the oil cooler through the water pipe to absorb the oil heat, and then flows through the water jacket of the cylinder block and water passage of the cylinder head to absorb the heat of the combustion chamber.

The water absorbing the oil heat and combustion chamber heat goes on to the thermostat through the water pipe, and circulates to the water pump if water temperature is lower than the valve opening temperature on the thermostat, while circulating to the radiator at water temperature higher than the valve opening temperature. At the radiator, the heat absorbed in the coolant is radiated to cool down and the coolant recirculates to the water pump.

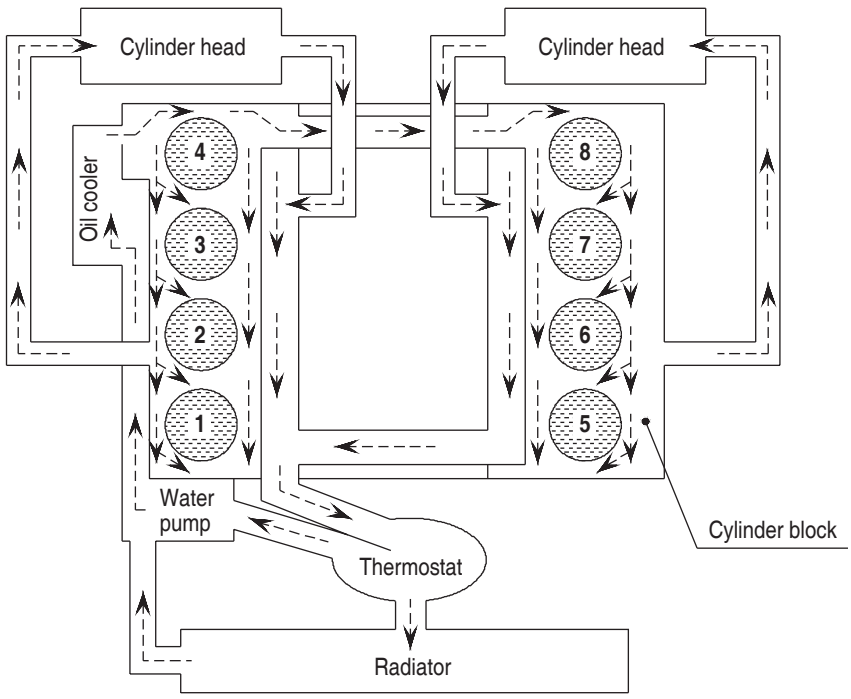

- **Specification**

Item	Specification
1. Water pump	
Type	Centrifugal type
Delivery	About 650 liter/min
Pumping speed	3,060 rpm
Pumping back pressure	760 mmHg
2. Thermostat	
Operating temperature	71 ~ 85°C
3. Cooling fan and belt	
Fan diameter – Number of blades	∅915 mm – 7
Fan belt tension	15 mm / deflection by thumb

https://truckmanualshub.com/

5.2.2. Thermostat

- **General descriptions and main data**

The thermostat maintains a constant temperature of coolant (71 ~ 85 °C) and improves thermal efficiency of the engine by preventing heat loss.
Namely, when the temperature of coolant is low, the thermostat valve is closed to make the coolant bypass to directly enter the water pump; when the coolant temperature rises to open wide the thermostat valve, the bypass circuit is closed and the water passage to the radiator is opened so that the coolant is forced to flow into the radiator.

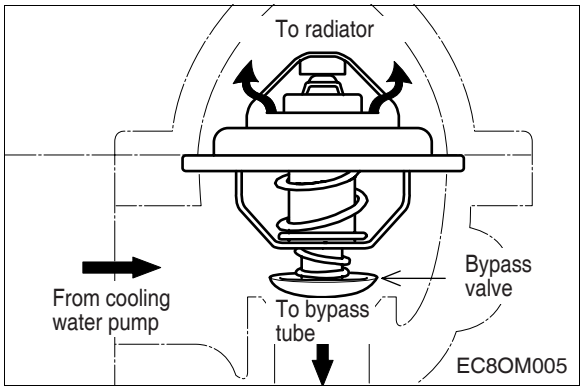

Item	Specifications	
	In moderate climates	In tropical climates
	Generator	
Type	Wax-pallet type	Wax-pallet type
Open at	71 °C	79 °C
Open wide at	85 °C	93 °C
Valve lift	8 mm or more	8 mm or more

NOTE :
There are 2 kinds of thermostats according to surrounding and operating conditions. One is named by 71 °C type and the other is 79 °C.

- **Inspecting**

(1) Check the wax pallet and spring for damage.
(2) Put the thermostat in a container of water, then heat the water slowly and check temperature with a thermometer. If the valve lift is 0.1 mm (starting to open) at temperature of 71 °C and 8 mm or more (opening wide) at temperature of 85 °C, the thermostat is normal.

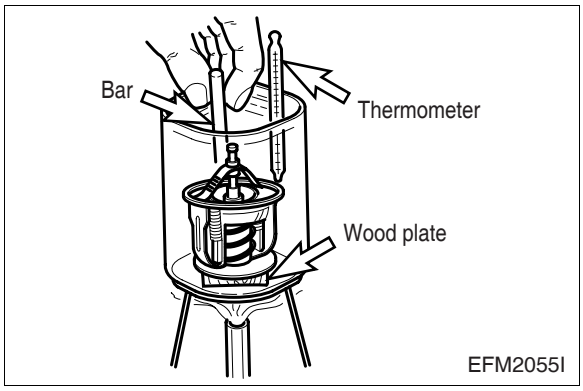

https://truckmanualshub.com/

- **Replacing thermostat and precautions for handling**

(1) Precautions for handling

The wax pallet type thermostat does not react as quickly as bellows type one to a variation of temperature of coolant. Such relatively slow reaction is mainly due to the large heat capacity of the wax pellet type thermostat. Therefore, to avoid a sharp rise of coolant temperature, it is essential to idle the engine sufficiently before running it. In cold weather, do not run the engine at overload or over-speed it immediately after engine starting

(2) When draining out or replenishing coolant, do it slowly so that air is bled sufficiently from the entire cooling system.

(3) Replacing thermostat

If the thermostat is detected defective, retrace with a new one.

5.2.3. Diagnostics and troubleshooting

Complaints	Possible causes	Corrections
1. Engine overheating	● Lack of coolant	● Replenish coolant
	● Radiator cap pressure valve spring weakened	● Replace cap
	● Fan belt loosened or broken	● Adjust or replace fan belt
	● Fan belt fouled with oil	● Replace fan belt
	● Thermostat inoperative	● Replace thermostat
	● Water pump defective	● Repair or replace
	● Restrictions in water passages due to deposit of scales	● Clean radiator and water passages
	● Injection timing incorrect	● Adjust injection timing correctly
	● Restriction in radiator core	● Clean exterior of radiator
	● Gases leaking into water jacket due to broken cylinder head gasket	● Replace cylinder head gasket
2. Engine overcooling	● Thermostat inoperative	● Replace thermostat
	● Ambient temperature too low	● Install radiator curtain
3. Lack of coolant	● Radiator leaky	● Correct or replace
	● Radiator hoses loosely connected or damaged	● Retighten clamps or replace hoses
	● Radiator cap valve spring weakened	● Replace cap
	● Water pump leaky	● Repair or replace
	● Heater hoses loosely connected or broken	● Tighten or replace hoses
	● Cylinder head gasket leaky	● Replace cylinder head gasket
	● Cylinder head or cylinder block cracked	● Replace cylinder head block
4. Cooling system noisy	● Water pump bearing defective	● Replace bearing
	● Fan loosely fitted or bent	● Retighten or replace fan
	● Fan out of balance	● Replace fan
	● Fan belt defective	● Replace fan belt

https://truckmanualshub.com/

5.3. Lubricating System

5.3.1. General descriptions and main data

- **General descriptions**

All the engine oil pumped up from the oil pan by the gear type oil pump is filtrated through the oil cooler and oil filter, and this filtrated oil is forced through the main oil gallery in the cylinder block from where it is distributed to lubricate the various sliding parts, and fuel injection pump in order to ensure normal engine performance.

- **Specifications**

Item	Specifications	Item	Specifications
Lubricating system	Forced pressure circulation	Oil filter type	Full flow
Oil pump type	Gear type	Bypass for filter element	
Relief valve opening pressure	8.5 ~ 10 kg/cm²	Valve opening pressure	2.1 ± 0.3 kg/cm²
Adjusting valve for spray nozzle		Bypass for entire oil filter	
Opening pressure	1.6 ~ 1.9 kg/cm²	Valve opening pressure	4.5 ± 0.2 kg/cm²

- **Diagram of lubricating system**

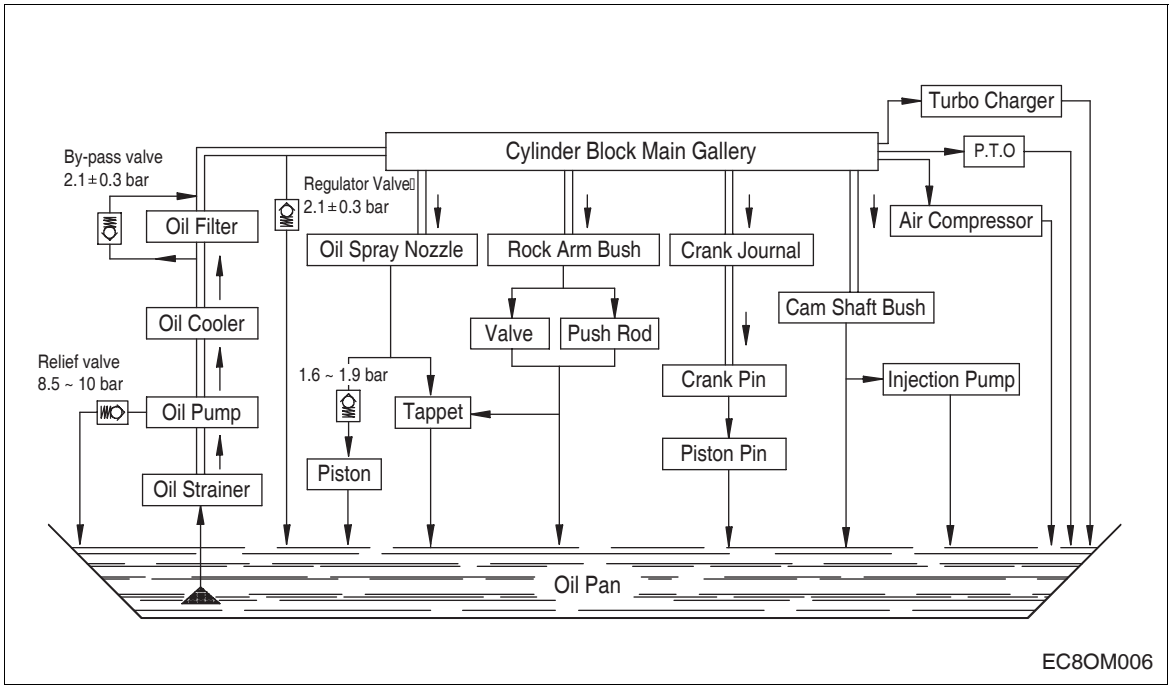

https://truckmanualshub.com/

5.3.2. Oil filter

- This oil filter mounted in this engine is a full flow type, so it is necessary to replace it with a new one at the specified intervals.

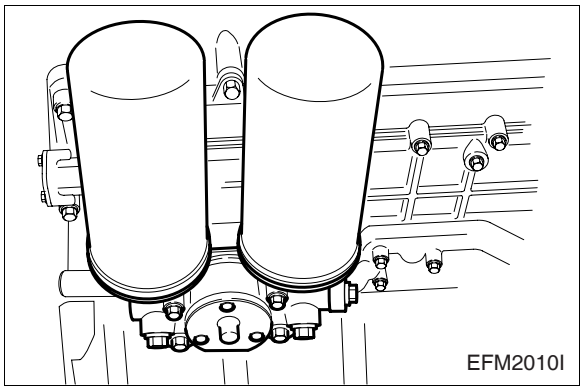

5.3.3. Diagnostics and troubleshooting

Complaints	Possible causes	Corrections
1. Oil consumption excessive	● Poor oil ● Oil seal or packing leaky ● Pistons or piston rings worn ● Cylinder liner worn ● Piston rings sticking ● Valve guide oil seals or valve guides, or valve stem worn	● Use suggested oil ● Replace ● Replace pistons and/or piston rings ● Replace cylinder liner ● Replace pistons and/or piston rings ● Replace
2. Oil pressure too low	● Poor oil ● Relief valve sticking ● Restrictions in oil pump strainer ● Oil pump gear worn ● Oil pump feed pipe cracked ● Oil pump defective ● Oil pressure gauge defective ● Various bearings worn	● Use suggested oil ● Replace ● Clean strainer ● Replace ● Replace ● Correct or replace ● Correct or replace ● Replace
3. Oil deteriorates quickly	● Restriction in oil filter ● Gases leaking	● Replace filter element ● Replace piston rings and cylinder liner

https://truckmanualshub.com/

5.4. Turbo Charger

5.4.1. Data and structure

1) Technical data of generator engine

Generator Engine	P158LE	P180LE	P222LE
Turbocharger Model	Allied Signal T04E	Allied Signal T45	Allied Signal TV51
Rated Revolution (rpm)	111,800	92,200	82,000
Intake Air Quantity (m^3/sec)	0.26	0.32	0.40
Compression Efficiency (%)	75.5	75.0	77.5
Compression Ratio	3.00	2.80	2.90

2) Technical data of power unit engine

Generator Engine	PU158TI	PU180TI	PU222TI
Turbocharger Model	Allied Signal T04E	Allied Signal T45	Allied Signal TV51
Rated Revolution (rpm)	111,800	92,200	82,000
Intake Air Quantity (m^3/sec)	0.26	0.32	0.40
Compression Efficiency (%)	75.5	75.0	77.5
Compression Ratio	3.00	2.80	2.90

3) Structure

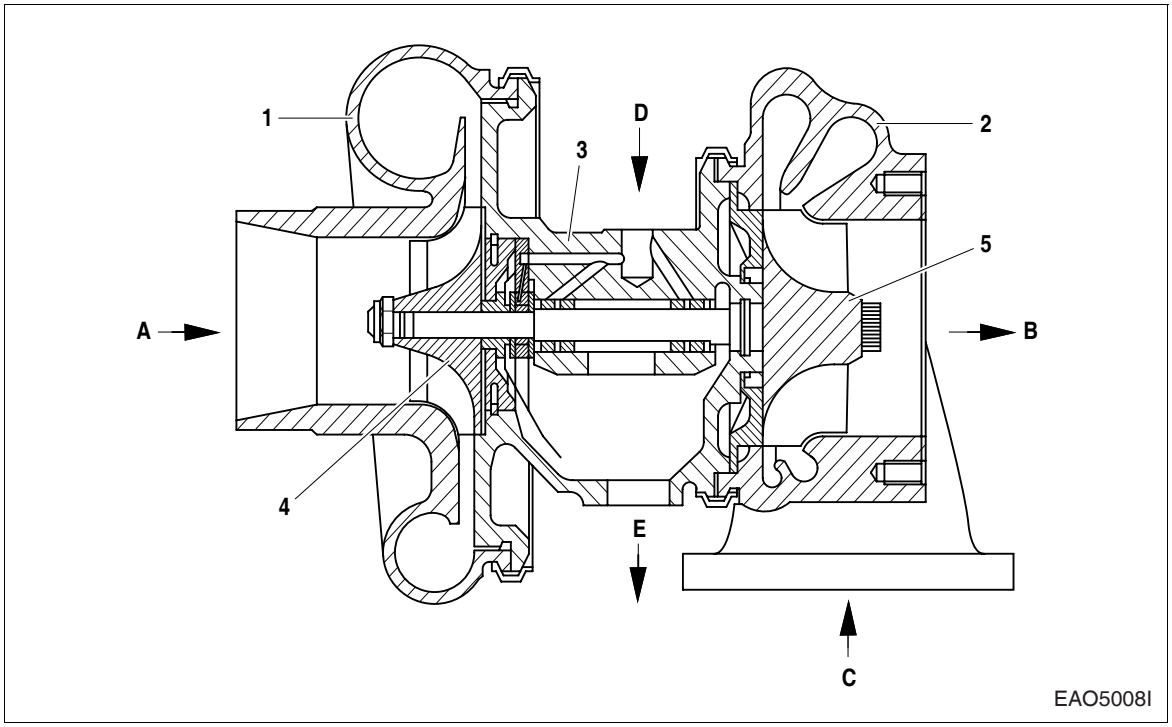

1. Impeller casing
2. Turbine casing
3. Bearing casing
4. Impeller
5. Turbine

A. Air inlet
B. Gas outlet
C. Gas inlet
D. Oil supply
E. Oil return

https://truckmanualshub.com/

5.4.2. Construction

- Make sure that serving should be performed at the professional maintenance shop as authorized by allied signal Company.

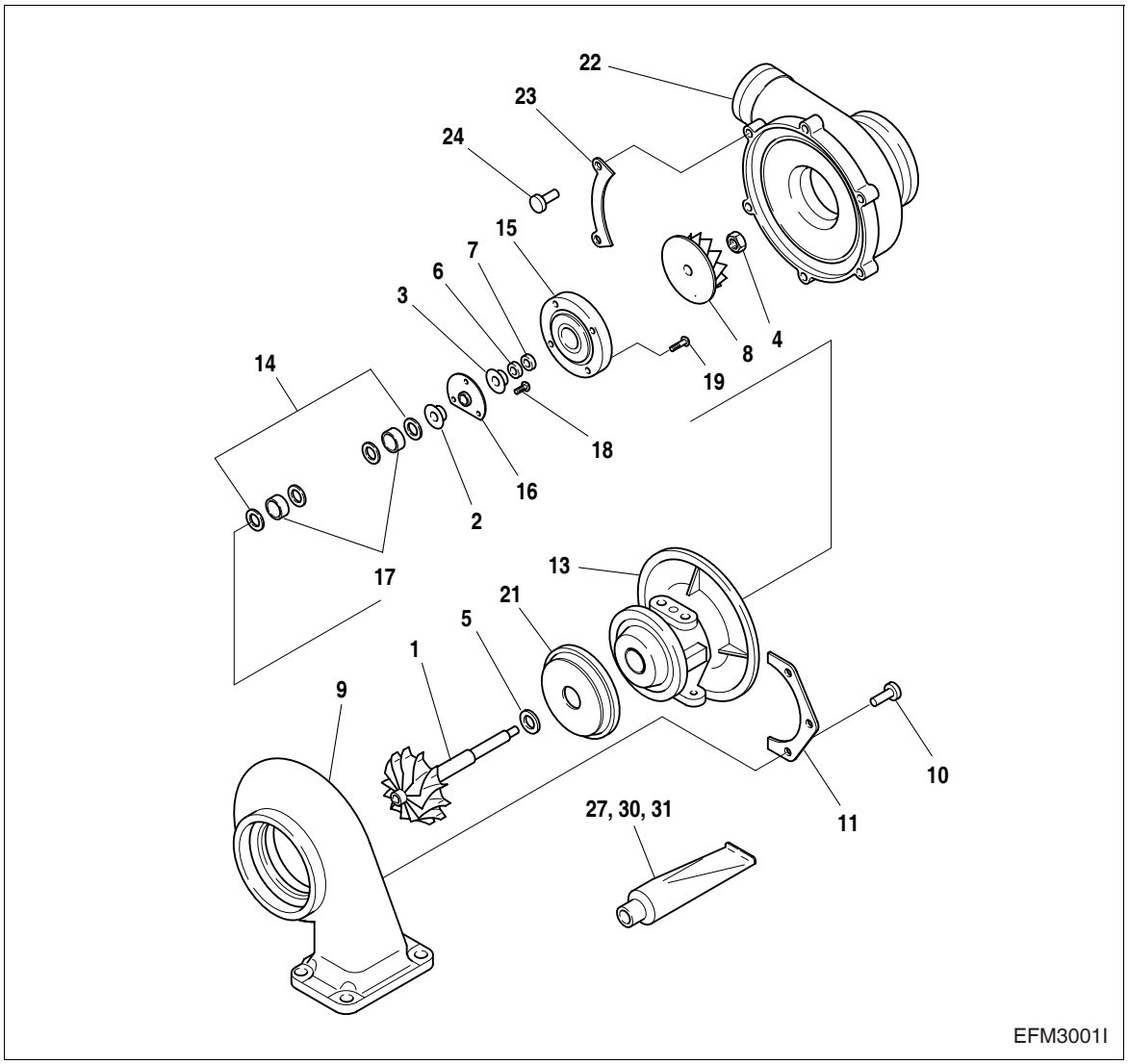

1. Turbine shaft
2. Thrust bush
3. Oil shut off
4. Fixing nut
5. Seal ring
6. Seal ring
7. Seal ring
8. Compressor wing wheel
9. Turbine housing
10. Bolt
11. Clamp
13. Bearing housing
14. Retainer ring
15. Seal plate
16. Thrust bearing
17. Journal bearing
18. Screw
19. Screw
21. Heat dissipator
22. Compressor housing
23. Clamp
24. Bolt
27. Liquid gasket
30. Loctite
31. Liquid anti-burn agents

https://truckmanualshub.com/

5.4.3. Summary

- The engine output depends upon the supplied fuel quantity and the engine efficiency. In order to transform into the effective work of engine by burning the supplied fuel fully, the sufficient air to burn the fuel should be supplied to the cylinder. Therefore, the engine output is essentially determined by the size of the cylinder, and for if the air is supplied to the given volume of cylinder with the air being compressed, the air quantity in the cylinder will Increase as much to result in that it may burn more fuel. the output will also be able to increase, Supplying the air by compressing like this into the engine cylinder is called as super charging, and super charging by means of exhaust gas energy that discharges to the atmosphere is called as the turbo charging.

5.4.4. Function

1) Turbine

The exhaust gas that is discharged from combustion chamber passes through turbine housing conveying an energy to turbine wings to give the rotating power, This is called as the turbine and in order not to influence a bad effect at bearing part, there are the seal ring and heat dissipator.

2) Compressor

It is connected to the same shaft with the turbine to make a revolving assembly, and receive the revolving force of turbine, and sends air to the suction manifold by suctioning and compressing it. This is called as the compressor.

3) Bearing

- Thrust bearing force is applied to the turbine wheel and an arrangement is made for the shaft not to shift.
- Journal bearing (floating bearing) is adopted and it forms the double oil films at the in out surfaces in comparison to the general stationary type so that the bearing may be able to rotate independently and consequently the double layers of films act as the damper to make the slipping speed on the bearing surface less than the rotating speed of shaft so that the dynamic stability may be obtained.

4) Sealing at compressor shaft

In order for the compressed intake air and lubricating oil not to leak, a seal plate and a seal ring are made to the double structures.

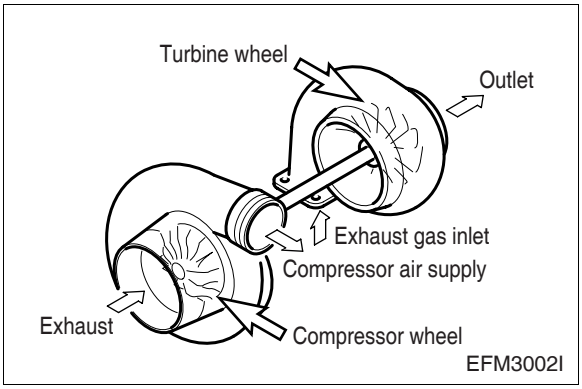

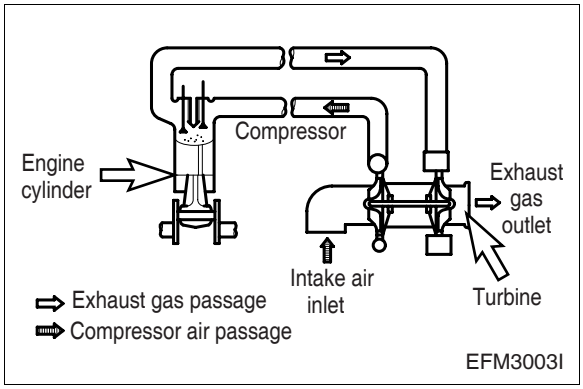

https://truckmanualshub.com/

5.4.5. Maintenance

The turbochargers do not call for any specific maintenance.

The only points to be observed are the oil pipes which should be checked at every oil change for leakage and restrictions.

The air cleaners should be carefully serviced.

Furthermore, a regular check should be kept on charge air and exhaust gas pipes. Any leakage should be attended to at once because they are liable to cause overheating of the engine.

When operating in highly dust or oil laden atmospheres, cleaning of the air impeller may be necessary from time to time. To do this, remove compressor casing (Caution : Do not skew it!) and clean in non-acid solvent, if necessary using a plastic scraper.

If the air compressor should be badly fouled, it is recommended that the wheel be allowed to soak in a vessel with solvent and to clean it then with a stiff brush. In doing so, take care to see that only the compressor wheel is immersed and that the turbocharger is supported on the bearing casing and not on the wheel.

https://truckmanualshub.com/

5.4.6. Handling

1) Precautions at engine

Operation following items must be observed at the starting, operation and stop of engine.

Item	Care	Items
At starting	1) Inspect oil quantity 2) After confirming that oil pressure rises by starting engine with starter (until the pointer of oil pressure gauge moves or pressure indicating lamp operates), the starting must be done. 3) In case that oil, oil filter and lubricating system's part are replaced or engine was stalled for long time (more than a week), and in case of operation under cold weather, loosen the oil pipe connecting parts of turbocharger inlet, and operate the starting motor until oil comes out the connecting parts. Care must be paid that after the confirming above, retighten the pipe connecting parts without fail, and proceed with the normal starting.	2) If engine is started quickly, of course beginning with every parts of engine, for it revolves without oil that is to reach to the turbocharger, the bearing's abnormal wear or stuck may be caused. 3) In case that engine stalled for long time and of cold weather, the fluidity of oil may be get worse.
Immediately after starting	1) Perform idling operation for about 5 min. immediately after engine starting. 2) Various inspections must insure that there are no leakage of oil, gas and air.	1) Sudden load at time soon after engine starting and at the state when turbocharger did not yet reach to smooth revolution, if abrupt load is applied to engine, some parts where oil did still not reach may cause a burn to be stuck. 2) If there are the leakage of oil, gas, air, particularly oil, for the oil pressure lowers, it causes a burn of bearing to be stuck.
During operation	Following items must be confirmed. 1) Oil pressure at Idling : 90 ~ 300 kPa (0.9 ~ 3.0 bar) at full load : 300 ~ 650 kPa (3.0 ~ 6.5 bar) 2) When abnormal noises and vibration are generated, slow down the revolution and must stop it to investigate the causes.	1) If the pressure is too low, abnormal wear or stuck may be caused. Or if too high, the oil leak may be generated. 2) If the engine operation were continued with abnormal noises and vibration, it causes the engine trouble that can not be repaired or some other troubles.
At stop	1) At stopping the engine, perform the idling operation for 5 min. and then stop it.	1) After heavy load operation, if the engine were stopped suddenly, the heat would be conducted to bearing parts from red hot turbine wings that would result in burning the oil to cause the stuck bearing metal and revolving shaft.

https://truckmanualshub.com/

5.4.7. Routine inspection and maintenance

Since the state of turbocharger depends largely on the state of engine maintenance, to perform the specified up keep thoroughly is needed.

1) Intake air

System in the intake air system, care must be taken to the air cleaner. In case of oil passing type air cleaner, if the oil level is lower than the specified value, the cleaning efficiency get worse, if higher, the sucked oil pollutes a case. Particularly, for if the rotor were polluted, the balance adjusted precisely would be deviated to cause a vibration that may cause the stuck or abnormal wear by loading large force to the bearing, the perfect air cleaner must always be used. In case of dry type filter, according to the indication of a dust indicator, cleaning must be done to make the intake air resistance as small as possible.

2) Exhaust system

In exhaust system, a care must be taken to the gas leak and the stuck prevention If exhaust gas leaks from the exhaust pipe and turbocharger etc., for the super charging effect will be lowered, the installed states of various parts must be paid with careful attention. Since the parts that reach to high temperature during operation such as the turbine room use the anti- heat nuts, a care must be paid not to mix with the general nuts and at the same time, bolt stuck preventing paint should be coated on the nut for the designated places.

3) Fuel system

If the full load stopper that restricts the maximum fuel injection quantity of fuel injection pump and the maximum speed stopper that restricts the maximum speed are adjusted without the pump tester, the turbocharger may overrun to be damaged. Also, if the atomizing state of fuel injection nozzle becomes worse or the injection timing gets wrong, for the raised temperature of exhaust gas will influence badly to the turbocharger, the nozzle testing must be done.

4) Lubricating system

In the lubricating system, a care must be paid to the oil quality and oil element replacement cycle. For the oil deterioration of turbocharger equipped engine, needless to speak of engine assembly itself, influences badly to the turbocharger too, the specified engine oil (15W40, CE class) should used.

https://truckmanualshub.com/

5.4.8. Periodic inspection and maintenance

The turbocharger assembly must be inspected periodically.

1) Revolving state and inspection points of rotor

Inspection on the revolving state of rotor is performed according to abnormal noises. In case of using an acoustic bar, touch the turbocharger housing with a tip of bar and raise the engine revolution slowly, Then, in case that high sound is heard by every 2 ~ 3 sec. continuously, for there should be the possibility to be abnormal metal and rotor, replace or repair the turbocharger.

2) End play inspecting points of rotor

Disassemble the turbocharger from the engine and should inspect the end plays in axial and circumference direction. In case of disassembling the turbocharger, the oil inlet and outlet should necessarily be sealed with a tape.

a) Axial direction end play

- Wear limit : 0.20 mm

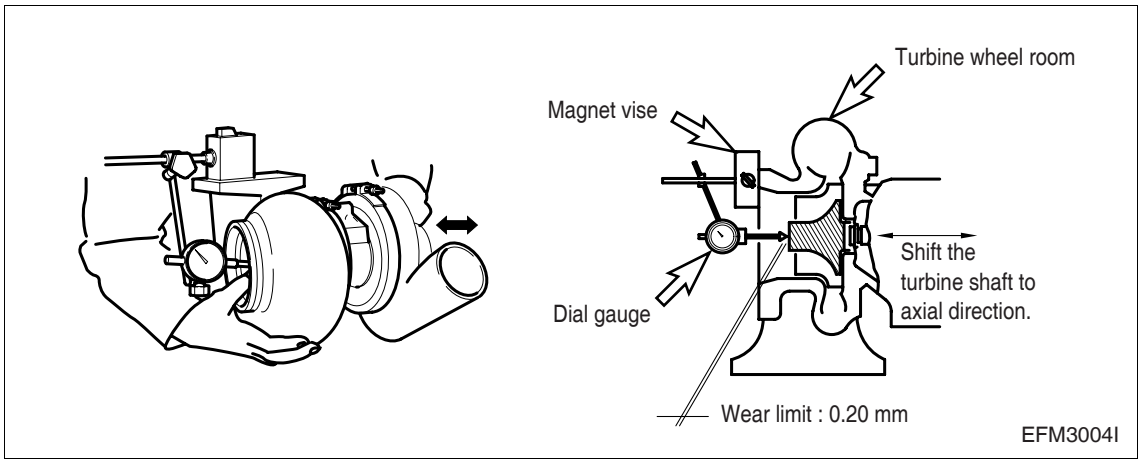

b) Rotor's circumference direction end play

- Wear limit : 0.65 mm

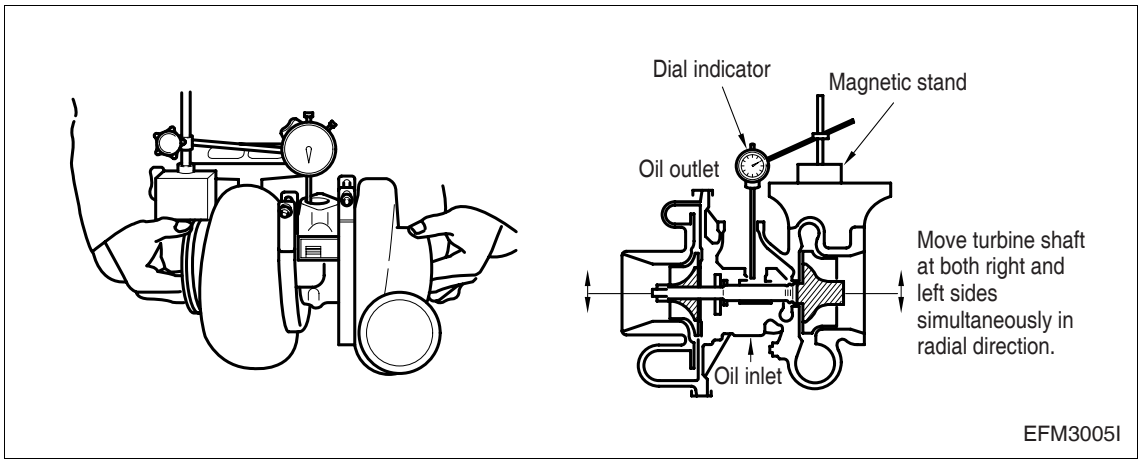

c) In case that the end plays to axial and circumference directions, replace or repair the turbocharger.

https://truckmanualshub.com/

3) Overhaul and cleaning points

Disassemble the turbocharger from engine and perform a cleaning and inspection, and in this case, the oil inlet and outlet should necessarily be sealed with tape etc.

4) Precautions in assembling engine

When in assembling the turbocharger or the handling after assembling should work observing the following precautions necessarily. Particularly, precise care should be taken for foreign material not to get into the turbocharger.

a) Lubricating system

- Prior to assembling it into the engine, fill new oil into oil Inlet and turning turbine shaft with hand, lubricate journal and thrust bearing.
- Clean the pipe and oil outlet pipe between engine and oil inlet, and confirm if there is any pipe damage or foreign material.
- In order for oil not to leak from various connections, assemble securely.

b) Air intake system

- Confirm if there is any foreign material inside the air intake system.
- Assemble securely the air intake duct and air cleaner so that the connections from them may not leak an air.

c) Exhaust system

- Confirm if there is any foreign material in the exhaust system.
- Bolts and nuts must be made of anti-heat steel and in assembling, care should be taken not use the general nuts and coat the bolts and nuts with the anti-stuck agents at the same time.
- Assemble securely for gas not to leak from various connecting parts of exhaust pipes.

https://truckmanualshub.com/

5.4.9. Trouble cause diagnosis and remedy

Condition	Causes	Remedies
1. Exhaust gas excessive	1) Air cleaner elements clogged	Replace or clean
	2) Air Inlet port clogged	Inspect or repair
	3) Air leaks from air intake system	Inspect or repair
	4) Turbocharger impossible to rotate due to stuck	Overhaul and repair or replace
	5) Turbine wing's contact	Overhaul and repair or replace
	6) Piping deformation or clogging of exhaust system	Inspect and repair
2. White smoke excessive	1) Oil leaks into turbine and compressor.	Overhaul and repair or replace
	2) Seal ring's abnormal wear or damage	Overhaul and repair or replace
3. Output lowered	1) Gas leak from various parts of exhaust system	Inspect and repair
	2) Air cleaner's elements clogged	Replace or clean
	3) Turbocharger's pollution or damage	Overhaul and repair or replace
	4) Air leaks from discharge part of compressor side	Inspect and repair
4. Abnormal noises or vibrations	1) Revolving part's contact	Overhaul and repair or replace
	2) Revolving imbalance of rotor	Overhaul and repair or replace
	3) Stuck	Overhaul and repair or replace
	4) Various connections loose	Inspect and repair

https://truckmanualshub.com/

5.5. Installation

5.5.1. Inspection prior to installation

Measure the correctness of flywheel and flywheel housing. Prior to inspection, clean the flywheel and flywheel housing.

1) Measuring flywheel housing

Measure the flywheel housing surface and install the dial gauge (1/1,000) at the flywheel so as to be vertical to the flywheel housing, and let the gauge stem to contact to the flange. Rotate the flywheel, and measure the surface error of flywheel housing flange. The surface error should not exceed 0.2 mm.

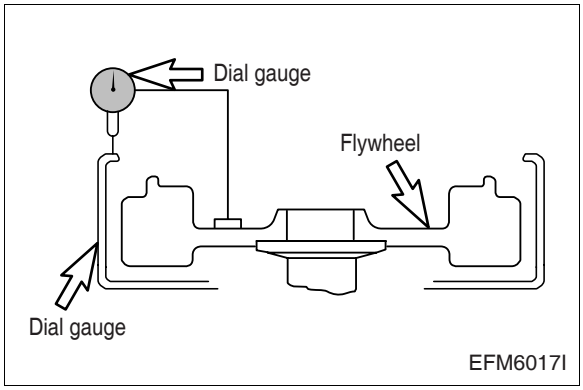

2) Measuring bore of flywheel

Housing Attach the gauge as above so that the gauge stem may contact the flywheel housing bore as the right figure. Measure the eccentrics of flywheel housing bore by rotating the flywheel. The eccentrics should not exceed 0.2 mm.

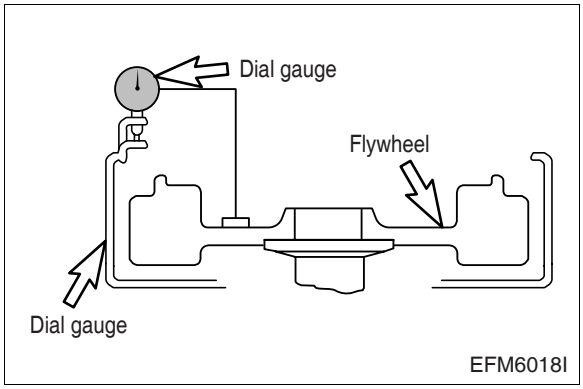

3) Measuring deformation of flywheel installing surface

Fix the dial gauge to the flywheel housing so as for the gauge stem to be vertical to the surface to be installed. The deviation quantity should not exceed 0.127 mm/inch.

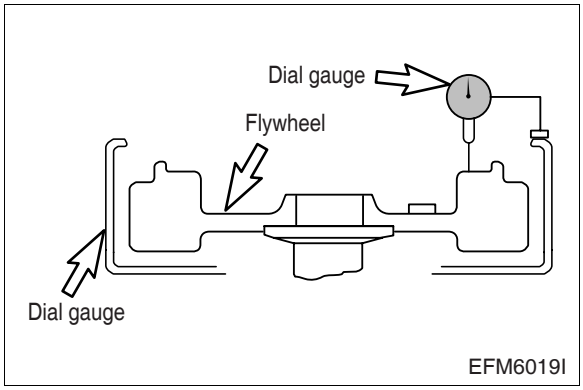

https://truckmanualshub.com/

4) Measuring pilot bore of flywheel

Install the gauge as below so as for the gauge stem to contact to the pilot bore of the surface to be installed. The eccentrics of the pilot bore of flywheel should not exceed 0.127 mm at maximum.

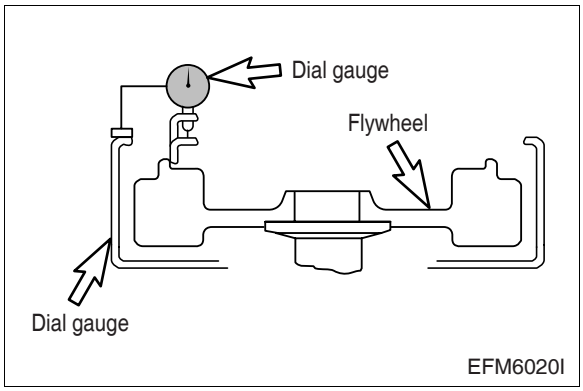

5.5.2. Installing

The center alignment of engine and Generator set is the most important factor for the extension of performance and life. Although aligning the center perfectly and accurately requires only few minutes, it is able to prevent unnecessary mechanical trouble at the future.

1) Bed rail

At the installation of Generator set's bed rail, use steel, If the bed rail is strong enough, the center alignment of engine with Generator gets worse so that the excessive vibration may occur.

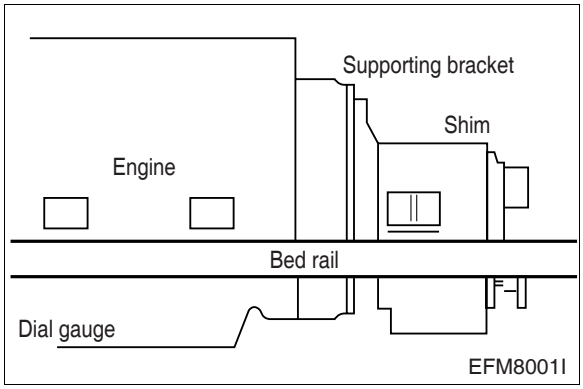

2) Supporting

As in the engine installation, the supporting brackets are used even at the installation of Generator. The bracket must be solidly fixed at the Generator installing platform and the bed rail.

https://truckmanualshub.com/

3) Aligning center

The center alignment of engine and Generator is the most important factor for the extension of life cycle.

- Output shaft flange and opponent side flange of Generator should be aligned in their centers horizontal and parallel direction.
- The adjustment between flange surfaces at the lower part should maintain less than 0.15 mm when the upper part's surfaces just meet and the deviation around the circumference should be maintained within 0.1 mm as following figure.

Surface (TIR)	Less than 0.15 mm
Center (TIR)	Less than 0.1 mm

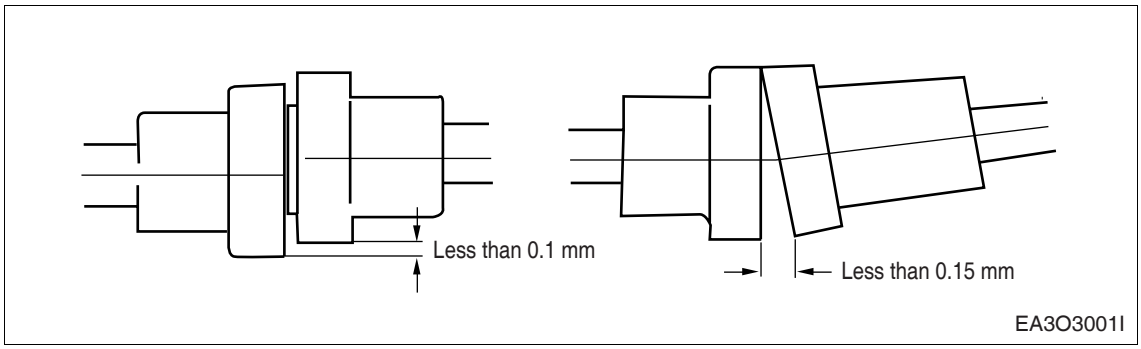

For bed rail is apt to deform for 6 months after initial performance, adjusting the center should be checked after 1 ~ 2 months.

5.5.3. Installing fuel system

Oil purifier should be installed between fuel tank and engine. For tank is always surrounded with humidity, water part often Infiltrates into fuel and then engine to result in the nozzle stuck and engine efficiency drop etc.

- **Example of fuel system installation**

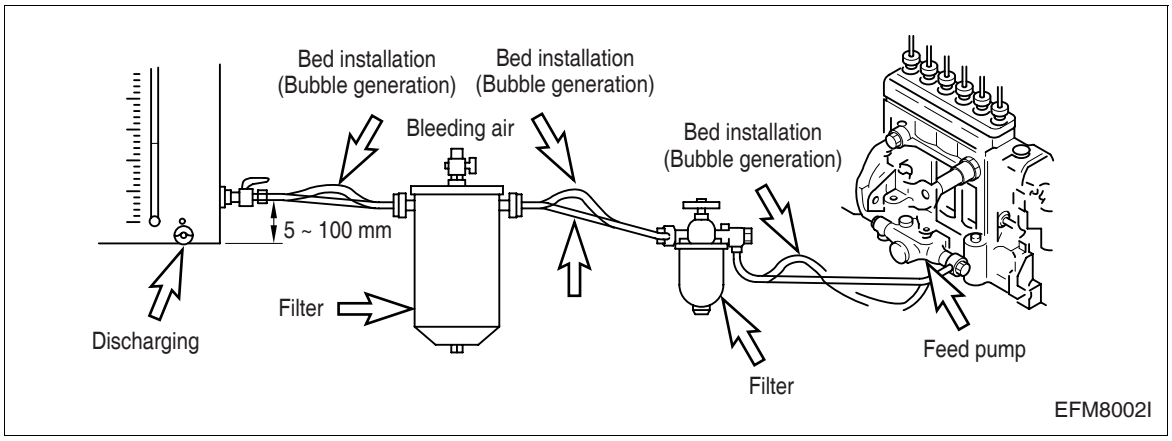

The position of fuel tank should be high than the engine fuel pump but when it is compelled to install at lower position, its lift should be within 1 m, and the fuel pipe be straight in order to prevent air bubble generation.

https://truckmanualshub.com/

5.6. Air Cleaner

1. Connection port, fouling indicator
2. Cleaner housing
3. Clamp
4. Element
5. Hexagon nut
6. Cover
7. Dust bowl

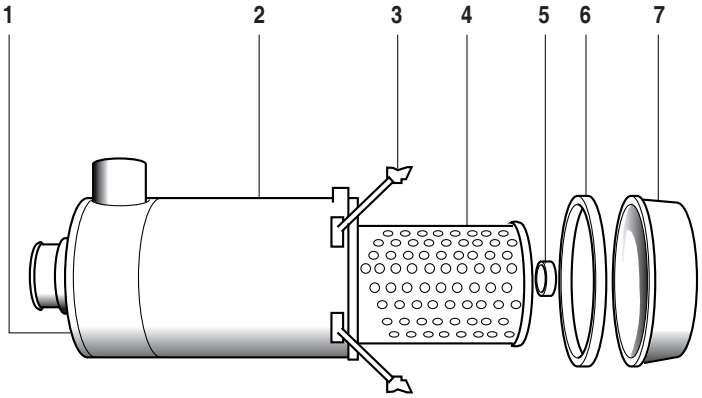

EA6O5012

5.6.1. Maintenance

(only when engine is switched off)

Empty the dust bowl (7) regularly. The bowl should never be filled more than halfway with dust.

On slipping off the two clamps (3), the dust bowl can be removed. Take off the cover (6) of the dust bowl and empty.

Be careful to assemble cover and bowl correctly.

There is a recess in the cover rim and a lug on the collector which should register. Where the filter is installed horizontally, watch for “top” mark on cleaner bowl.

5.6.2. Changing filter element

CAUTION :
Do not allow dirt to get into the clean air end.

- On removing the hexagon nut, take out the dirty cartridge and renew or clean.
- Wipe the cleaner housing with a damp cloth, in particular the sealing surface for the element.

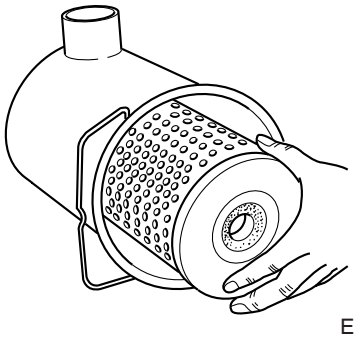

EA6O5013

NOTE :
Unless the maximum number of cleanings (up to 5 x) have been done, the filter cartridge should be renewed every two years or 4,000 hours operation.

https://truckmanualshub.com/

5.6.3. Cleaning filter elements

- **By compressed air**
  (wear goggles)
  For the purpose, the air gun should be fitted with a nozzle extension which is bent 90° at the discharge end and which is long enough to reach down inside to the bottom of the element.
  Moving the air gun up and down, blow out the element from the inside (maximum 500 kPa - 5 bar) until no more dust comes out of the filter pleats.

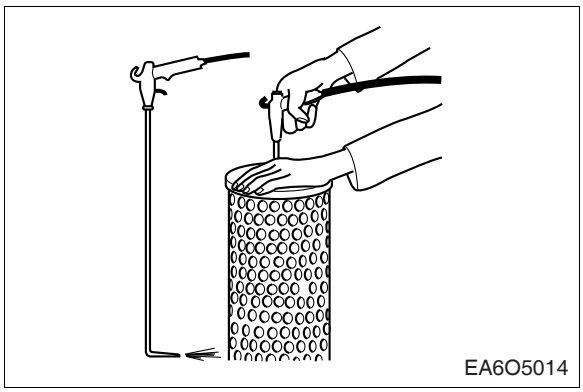

- **By washing**
  Before washing, the element should be precleaned by means of compressed air, as described above.
  Then allow the element to soak in lukewarm washing solvent for 10 minutes, and then move it to and for in the solvent for about 5 minutes.
  Rinse thoroughly in clean water, shake out and allow drying at room temperature. The cartridge must be dry before it is reinstalled. Never use steam sprayers, petrol (gasoline), alkalis or hot liquids etc. to clean the filter elements.

- **Knocking out dirt by hand**
  In emergencies, when no compressed air or cleaning agent is available, it is possible to clean the filter cartridge provisionally by hitting the end disk of the cartridge with the ball of one's thumb. Under no circumstances should the element be hit with a hard object or knocked against a hard surface to loosen dirt deposits.

- **Checking the filter cartridge**
  Before reinstalling the cartridge, it must be checked for damage e.g. to the paper pleats and rubber gaskets, or for bulges and dents etc. in the metal jacket.
  Cracks and holes in the paper pleating can be established by inspecting the cartridge with a flashlight.
  Damaged cartridges should not be reused under any circumstances. In cases of doubt, discard the cartridge and install a new one.

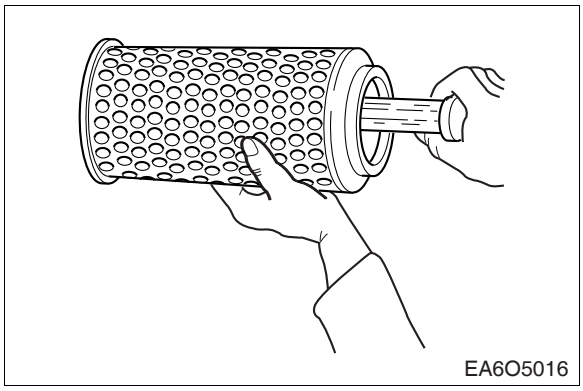

https://truckmanualshub.com/

5.7. Tightening Cylinder Head Bolts

1) Retightening cylinder head bolts on new engines by authorized specialist personnel (engine cold or warm)

The cylinder heads are mounted with cylinder head bolts which are tightened by the angle-of-rotation method. On new engines the cylinder head bolts are tightened up for the first time at the factory after the engine has been broken in.
After the first 400 hours of operation retighten cylinder head bolts 1 to 4 in the order shown in right figure by a further 90° (1/4 revolution).
The two outer screws (intake and exhaust sides) must not be retightened.

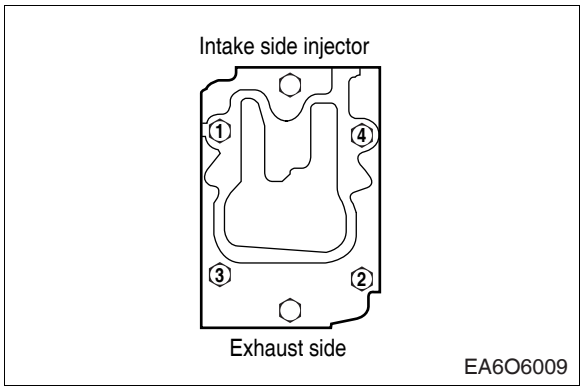

NOTE :
The cylinder head bolts to be retightened must not be loosened first, but simply tightened by a further 90° (1/4 revolution) from their actual position.

2) Tightening cylinder head bolts after a repair by authorized specialist personnel (engine cold)

Before inserting the cylinder head bolts oil them with engine oil on the thread (not to the bore) and coat the contact face of the bolt head with “Optimoly White T” assembly paste. Do not use any oils or oil additives that contain MoS_2.
The bolts must be tightened by the angle-of-rotation method as shown in right figure.

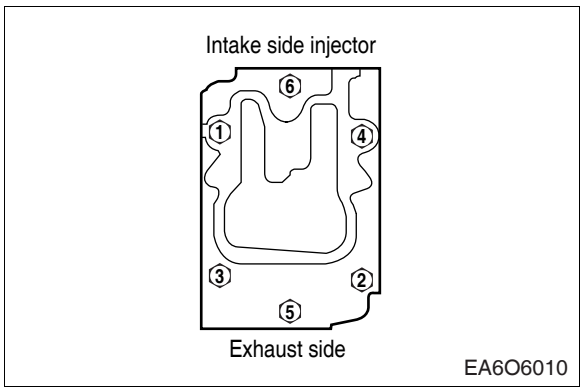

- 1st pretightening step = to 10 N·m
- 2nd pretightening step = to 80 N·m
- 3rd pretightening step = to 150 N·m
- 4th pretightening step = turn by 90°
- Final tightening = turn by 90°

https://truckmanualshub.com/

3) Retightening cylinder head bolts after repairs by authorized specialist personnel (engine cold or warm)

After the first 10 to 20 hours of operation after a repair turn the cylinder head bolts by a further 90° (1/4 revolution) in the order shown in above figure. ((2) Tightening cylinder head bolts after repair)

The cylinder head bolts to be retightened must not be loosened first, but simply tightened by a further 90° (1/4 revolution) from their actual position.

Attach the sticker “First retightening of cylinder head bolts ...”(Remove any other stickers which may already be attached).

After the first 400 hours of operation after a repair tighten cylinder head bolts 1 to 4 in the order shown in above figure ((1) Retightening cylinder head bolts on new engines) again by a further 90° (1/4 revolution).

The two outside screws (intake and exhaust side) must not be retightened.

NOTE :

When a cylinder head has been removed the cylinder head gasket must always be changed.

https://truckmanualshub.com/

5.8. V-belts

The tension of the V-belts should be checked after every 2,000 hours of operation.

1) Change the V-belts if necessary

If in the case of a multiple belt drive, wear or differing tensions are found, always replace the complete set of belts.

2) Checking condition

Check V-belts for cracks, oil, overheating and wear.

3) Testing by hand

The tension is correct if the V-belts can be pressed in by about the thickness of the V-belt. (no more midway between the belt pulleys)

A more precise check of the V-belt tension is possible only by using a V-belt tension tester.

4) Measuring tension

① Lower indicator arm (1) into the scale.

- Apply tester to belt at a point midway between two pulleys so that edge of contact surface (2) is flush with the V- belt.
- Slowly depress pad (3) until the spring can be heard to disengage. This will cause the indicator to move upwards.

If pressure is maintained after the spring has disengaged a false reading will be obtained!

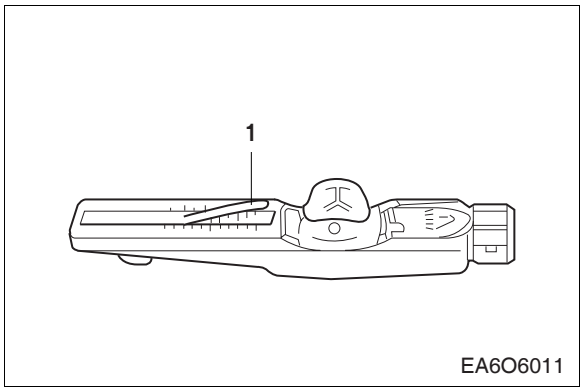

EA6O6011

② Reading of tension

- Read of the tensioning force of the belt at the point where the top surface of the indicator arm (1) intersects with the scale.
- Before taking readings make ensure that the indicator arm remains in its position.

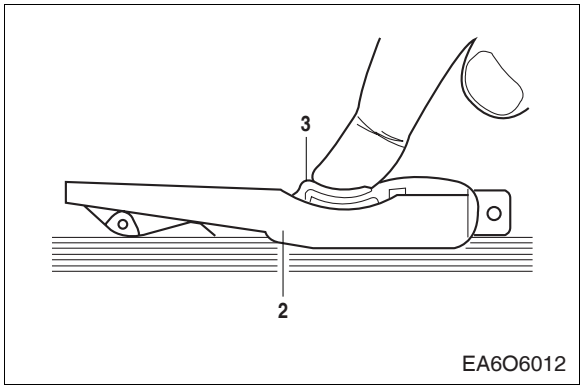

EA6O6012

https://truckmanualshub.com/

Type	Drive belt width	Tensioning forces on the tester		
		new installation		When servicing after long running time
		Installation	After 10 min. running time	
M	9.5 mm	50 kg	45 kg	40 kg
A *	**11.8 mm**	**55 kg**	**50 kg**	**45 kg**
B	15.5 mm	75 kg	70 kg	60 kg
C	20.2 mm	75 kg	70 kg	60 kg

***** : Adopted in P158LE, PU158TI, P180LE, PU180TI, P222LE, PU222TI

5) Tensioning and changing V-belt

- Remove fixing bolts. (1)
- Remove lock nut. (2)
- Adjust bolt (3) until V-belts have correct tensions.
- Retighten lock nut and fixing bolts.

To change the V-belts loosen mounting bolts (1) and lock nut (2) and push tension pulley inwards by turning adjusting bolt (3).

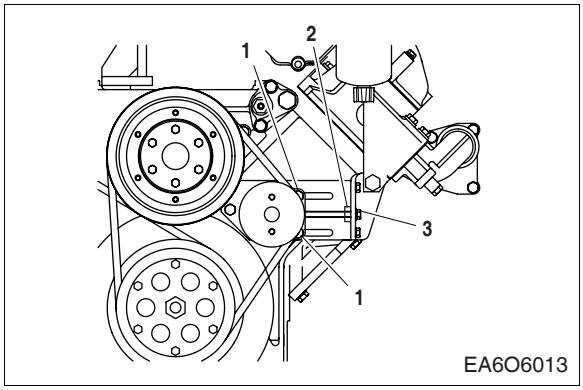

- Remove fixing bolts.
- Remove lock nut.
- Adjust nut until V-belts have correct tensions.
- Retighten lock nut and fixing bolts.

To replace the V-belts loosen lock nut and swing alternator inwards.

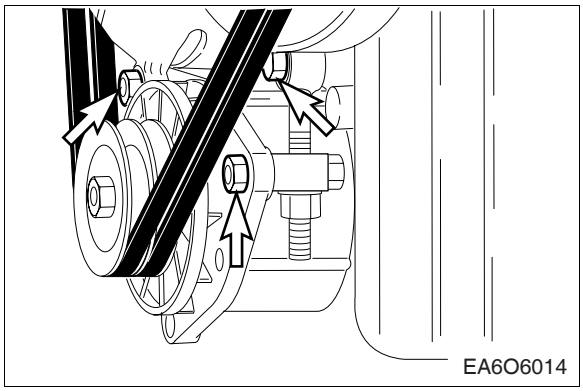

https://truckmanualshub.com/

6. Special Tool List

No	Part no.	Figure	Tool name
1	EF.120-029	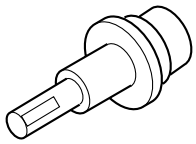	Oil seal insert Assembly (RR)
2	EF.120-183	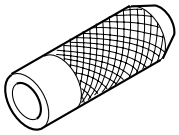	Valve stern oil seal installer
3	EI.00308-0084	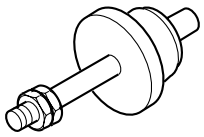	Nozzle holder extractor
4	EU.2-0532	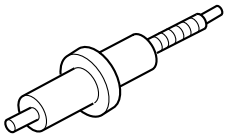	Compression gauge adapter
5	EI.03004-0225	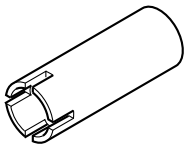	Nozzle plug socket
6	EF.120-189	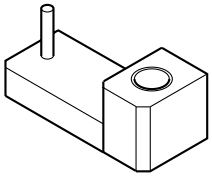	Injection pump alignment
7	EF.120-031	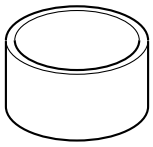	Piston sleeve
8	EF.120-028	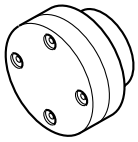	Liner assembly

https://truckmanualshub.com/

No	Part no.	Figure	Tool name
9	T7621010E	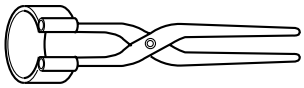	Piston ring plier
10	60.99901-0027	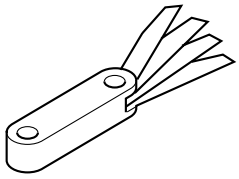	Feeler gauge
11	T7610001E	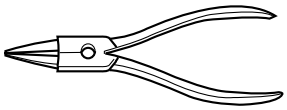	Snap ring plier
12	EF.123-065	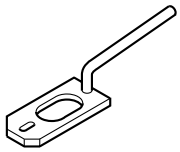	Valve cotter extractor
13	EF.120-069	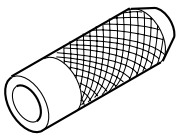	F.W.H. Pin installer
14	E1.05508-0815	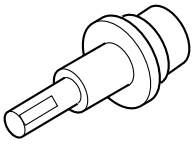	CRS Wear ring installer
15	EF.120-032	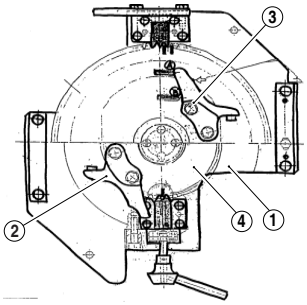	Can gear sub jig
16	EF.120-030	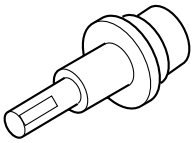	Oil seal insert assembly (FR)

https://truckmanualshub.com/

Appendix

● Standard table of tightening torque

Specification	Screw	Strength	Tightening Torque kg·m
Cylinder block bearing cap			
– main bolt	M18 × 2	12.9	Initial 30 kg·m + rotating angle 90°
– side bolt	M12 × 1.5	10.9	8
Flywheel housing			
– tightening bolt	M12 × 1.5	10.9	10
	M10	12.9	7.5
– cover bolt	M8	8.8	2.2
Counter weight	M16 × 1.5	10.9	Initial 10 kg·m + rotating angle 90°
Crank pulley	M16 × 1.5	10.9	21
Vibration damper	M10	10.9	6
Flywheel	M16 × 1.5	12.9	26
Cooling fan	M8	8.8	2.2
Connecting rod cap	M16 × 1.5	10.9	Initial 10 kg·m + rotating angle 90°
Cylinder head	M15 × 2	12.9	8 kg·m + 15 kg·m +angle 90°+ angle 90°
Cylinder head cover	M8	8.8	2.2
Fuel injection nozzle holder	M28	CK60	7 ± 0.5
Fuel injection pipe	M14 × 1.5		2.5
Cam shaft timer	M10	10.9	9
Rocker arm bracket	M10	10.9	6.5
Lock nut (adjusting screw)	M12 × 1	8.8	5
Oil pump cover	M8	8.8	2.2
Oil pump	M8	8.8	2.2
Oil cooler	M12	10.9	5
Oil pan	M8	8.8	2.2
Oil pan plug	M26 × 1.5		8
Exhaust manifold	M10	10.9	5.0
Intake manifold	M8	8.8	2.2
Fuel injection pump(cylinder block)	M10	10.9	6.5
Fuel filter	M12 × 1.5	8.8	8
Starting motor	M12 × 1.5	8	8
Alternator bracket	M14	8.8	12
Oil pressure switch	PT1/8		2
Water temperature switch	M14	8.8	2
Plug screw	M12 × 1.5		5
	M14 × 1.5		8
	M16 × 1.5		8
	M18 × 1.5		10
	M22 × 1.5		10
	M24 × 1.5		12
	M26 × 1.5		12
	M30 × 1.5		15
	AM10 × 1.0		5
	AM14 × 1.5		8

https://truckmanualshub.com/

● Standard bolt tightening torque table

Refer to the following table for bolts other then described above.

Diameter × pitch (mm)	Degree of strength										
	3.6	4.6	4.8	5.6	5.8	6.6	6.8	6.9	8.8	10.9	12.9
	(4A)	(4D)	(4S)	(5D)	(5S)	(6D)	(6S)	(6G)	(8G)	(10K)	(12K)
	Limit value for elasticity (kg/mm^2)										
	20	24	32	30	40	36	48	54	64	90	108
	Tightening torque (kg·m)										
M5	0.15	0.16	0.25	0.22	0.31	0.28	0.43	0.48	0.5	0.75	0.9
M6	0.28	0.30	0.45	0.4	0.55	0.47	0.77	0.85	0.9	1.25	0.5
M7	0.43	0.46	0.7	0.63	0.83	0.78	1.2	1.3	1.4	1.95	2.35
M8	0.7	0.75	1.1	1	1.4	1.25	1.9	2.1	2.2	3.1	3.8
M8 × 1	0.73	0.8	1.2	1.1	1.5	1.34	2.1	2.3	2.4	3.35	4.1
M10	1.35	1.4	2.2	1.9	2.7	2.35	3.7	4.2	4.4	6.2	7.4
M10 × 1	1.5	1.6	2.5	2.1	3.1	2.8	4.3	4.9	5	7	8.4
M12	2.4	2.5	3.7	3.3	4.7	4.2	6.3	7.2	7.5	10.5	12.5
M12 × 1.5	2.55	2.7	4	3.5	5	4.6	6.8	7.7	8	11.2	13.4
M14	3.7	3.9	6	5.2	7.5	7	10	11.5	12	17	20
M14 × 1.5	4.1	4.3	6.6	5.7	8.3	7.5	11.1	12.5	13	18.5	22
M16	5.6	6	9	8	11.5	10.5	17.9	18.5	18	26	31
M16 × 1.5	6.2	6.5	9.7	8.6	12.5	11.3	17	19.5	20	28	33
M18	7.8	8.3	12.5	11	16	14.5	21	24.2	25	36	43
M18 × 1.5	9.1	9.5	14.5	12.5	18.5	16.7	24.5	27.5	28	41	49
M20	11.5	12	18	16	22	19	31.5	35	36	51	60
M20 × 1.5	12.8	13.5	20.5	18	25	22.5	35	39.5	41	58	68
M22	15.5	16	24.5	21	30	26	42	46	49	67	75
M22 × 1.5	17	18.5	28	24	34	29	47	52	56	75	85
M24	20.5	21.5	33	27	40	34	55	58	63	82	92
M24 × 1.5	23	25	37	31	45	38	61	67	74	93	103

Others :

1. The above torque rating have been determined to 70 % or so of the limit value for bolt elasticity.
2. Tension is calculated by multiplying tensile strength by cross section of thread.
3. Special screws should be tightened to 85 % or so of the standard value.
   For example, a screw coated with MoS_2 should be tightened to 60 % or so of the standard value.

https://truckmanualshub.com/

● Tightening torque for plug screw

Items		Specifications	Remarks
Cylinder block	Inside dia. of liner forced in joint part (upper part)	∅145.800 ~ ∅145.840	∅145.8 H7
	Inside dia. of liner forced in joint part (lower part)	∅144.500 ~ ∅144.540	∅144.5 H7
	Inside dia. of liner color forced in part	∅153.900 ~ ∅154.150	∅153.9 H11
	Liner colored surface depth	9.97 ~ 9.99	
Cylinder liner	Outside dia.of liner forced in joint part(upper)	∅145.741 ~ ∅145.786	∅145.8 g6
	Outside dia. of liner forced in joint part(lower)	∅144.432 ~ ∅144.457	∅144.5 f6
	Outside dia. of liner color part	∅153.65 ~ ∅153.75	∅153.8
	Liner collar height	10.03 ~ 10.05	
	Liner forced in joint part (upper)	0.014 ~ 0.099	
	Liner forced in joint part (lower)	0.043 ~ 0.108	
	Liner collar part clearance	0.150 ~ 0.500	
	Inside dia. of liner	∅127.990 ~ ∅128.010	∅128 ± 0.01
	Liner's roundness & columness (upper)	0.01	from top up to 168 mm
	Liner's roundness & columness (lower)	0.015	from bottom up to 85 mm
	Liner's projection	0.04 ~ 0.08	measure at 4 place
Piston	Outside diameter of piston	∅127.739 ~ ∅127.757	measure 71.5 mm part from bottom (long length)
	Inside diameter of piston pin	∅46.003 ~ ∅46.009	
	Max. allowable weight per engine	50 g	
	1st ring groove width	3.5	
	2nd ring groove width	3.040 ~ 3.060	
	Oil ring home width	4.020 ~ 4.040	
Piston ring	1st ring height (thickness)	3.5	
	2nd ring height (thickness)	2.978 ~ 2.990	
	Oil ring height (thickness)	3.97 ~ 3.99	
	1st ring axial direction clearance	–	
	2nd ring axial direction clearance	0.050 ~ 0.082	
	Oil ring axial direction clearance	0.030 ~ 0.070	
	1st ring end part clearance	0.35 ~ 0.55	
	2nd ring end part clearance	0.40 ~ 0.60	
	Oil ring end part clearance	0.40 ~ 0.70	
Piston pin	Piston pin's outside diameter	∅45.994 ~ ∅46.000	
	Clearance between piston pin & pin hole	0.003 ~ 0.015	

Items		Specifications	Remarks
Connecting rod	Con rod small end part width	38.070 ~ 39.000	
	Con rod large end part width	35.341 ~ 35.380	35.5 C8
	Con rod cap	32.800 ~ 33.100	32.8 + 0.3
	Con rod axial direction clearance	0.240 ~ 0.392	
	Con rod small end part axial direction clearance	0.064 ~ 0.126	
	Con rod bush oil clearance	0.055 ~ 0.071	
	Con rod small end inside diameter (w/h bush)	∅46.055 ~ ∅46.065	
	Con rod small end inside diameter (w/o bush)	∅50.600 ~ ∅50.630	∅50.6 H7
	Con rod bush's diameter	∅50.670 ~ ∅50.700	
	Tighteness	0.04 ~ 0.10	
	Con rod large end part's inside diameter	∅95.000 ~ ∅95.022	∅95H6
	Con rod bearing spread (MIBA)	0.5 ~ 1.4	
	Con rod max. weight tolerance per engine	50 g	
	Perpendicularity of large end inside diameter	0.035	reference to
	Large end part's inside roundness & columness	0.01	con rod side face
	Large end part's inside straightness	0.005	
	Parallelness of small end inside with large end	0.02	
Crank shaft	Bearing housing diameter	∅111.000 ~ ∅111.022	∅111 H7
	Maximum shaking	0.05	
	Main bearing journal diameter		
	Standard	∅103.98 ~ ∅104.00	
	Undersize 0.10	∅103.88 ~ ∅103.90	
	Undersize 0.25	∅103.73 ~ ∅103.75	
	Undersize 0.50	∅103.48 ~ ∅103.50	
	Undersize 0.75	∅103.23 ~ ∅103.25	
	Undersize 1.00	∅102.98 ~ ∅103.00	
	Thrust bearing journal width		
	Standard	38.000 ~ 38.062	38 H9
	Undersize 1 , 2	38.500 ~ 38.562	
	Undersize 3 , 4	39.000 ~ 39.062	
	Con rod bearing journal diameter		
	Standard	∅89.98 ~ ∅90.00	
	Undersize 0.10	∅89.88 ~ ∅89.00	
	Undersize 0.25	∅89.73 ~ ∅89.75	
	Undersize 0.50	∅89.48 ~ ∅89.50	
	Undersize 0.75	∅89.23 ~ ∅89.25	
	Undersize 1.00	∅89.98 ~ ∅89.00	
	Main bearing journal's roundness	0.01	
	Main bearing journal's parallelness	0.005	
	Medium main bearing journal's shake	0.06	no 1, no 5 support
	Wear ring press in part's journal diameter	∅99.985 ~ ∅100.020	∅100 j7
	Wear ring's inside diameter	∅99.907 ~ ∅99.942	∅100 S7
	Overlap	0.043 ~ 0.113	
	Thrust bearing width		
	Standard	37.74 ~ 37.81	
	Oversize	38.24 ~ 38.31	
	Oversize	38.74 ~ 38.81	

https://truckmanualshub.com/

Items		Specifications	Remarks
Crank shaft	Crankshaft's axial direction's clearance	0.190 ~ 0.322	
	Main bearing thickness		
	Standard	3.460 ~ 3.472	
	Oversize 0.10	3.510 ~ 3.522	
	Oversize 0.25	3.585 ~ 3.597	
	Oversize 0.50	3.710 ~ 3.722	
	Oversize 0.75	3.835 ~ 3.847	
	Oversize 1.00	3.960 ~ 3.972	
	Main bearing oil gap	0.066 ~ 0.132	
	Main bearing spread	0.3 ~ 1.2	
	Thrust bearing's spread	0.3 ~ 1.2	
Flywheel	Ring Gear assembly part's Outside diameter	∅432.490 ~ ∅432.645	
	Ring gear inside diameter	∅432.000 ~ ∅432.155	
	Overlap	0.335 ~ 0.645	
	Heat fitting temp. (°C)	200 ~ 230	
	Allowable shaking amount after assembly	0.5	
	Outside diameter after reassembly used ring	∅114.980 ~ ∅115.015	
Cylinder head & valve	Head gasket thickness (after tightening bolts)	1.205 ~ 1.295	
	Cylinder head height	113.9 ~ 114.0	
	Cylinder head seal surface roughness	max. 16 μ	
	Valve projecting amount	- 0.65 ~ - 0.95	
	Exhaust valve		
	Stem diameter	∅11.945 ~ ∅11.955	
	Radius direction clearance	0.045 ~ 0.073	
	Seat angle	45°	
	Head diameter	∅50.9 ~ ∅51.1	
	"H" thickness of valve head	1.9 ~ 2.3	
	Valve seat part diameter of head	∅53.00 ~ ∅53.03	
	Outside diameter of valve seat	∅53.10 ~ ∅53.11	
	Intake valve		
	Stem diameter	∅11.969 ~ ∅11.980	
	Radius direction clearance	0.020 ~ 0.049	
	Seat angle	30°	
	Head diameter	∅57.85 ~ ∅58.15	
	"H" thickness of valve head	2.6 ~ 3.0	
	Valve seat part diameter of head	∅61.00 ~ ∅61.03	∅61 H7
	Outside dia. of valve seat	∅61.10 ~ ∅61.11	
	Depth of head's valve seat assembly part	12.5 ~ 12.6	
	Valve guide inside diameter	∅12.000 ~ ∅12.018	∅12 H7
	Valve guide's inside diameter of head	∅18.000 ~ ∅18.018	∅18 H7
	Valve guide's outside diameter	∅18.028 ~ ∅18.046	∅18.25 S7
	Valve guide assembly locking piece	0.010 ~ 0.046	
	Valve seat's shaking	0.04	reference to valve guide

Items		Specifications	Remarks
Valve spring	Valve lift	14.1	
	Projecting amount of valve guide	17.1 ~ 17.5	Above valve spring
	Free length of inside spring	72.43	
	Spring load of inside spring	15 ~ 17kg	at 46.3 mm
	Spring load of inside spring	27 ~ 32kg	at 32.3 mm
	Free length of outside spring	68.17	
	Spring load of outside spring	37 ~ 41kg	at 46.3 mm
	Spring load of outside spring	66.5 ~ 76.5kg	at 32.8 mm
Timing	Rocker arm bush's inside diameter	∅25.005 ~ ∅25.035	when assembled
	Rocker arm bearing journal's diameter	∅24.967 ~ ∅24.990	
	Bearing's clearance	0.015 ~ 0.068	
	Push rod's shaking	0.3	
	Valve tappet ass'y part's inside dia. of block	∅20.000 ~ ∅20.021	∅20 H7
	Push rod's outside diameter	∅19.944 ~ ∅19.965	
	Tappet clearance	0.035 ~ 0.077	
	Bush assembly's inside diameter of block	∅70.077 ~ ∅70.061	
	Camshaft diameter	∅69.910 ~ ∅69.940	∅70 e7
	Camshaft bearing oil gap	0.060 ~ 0.120	
	Camshaft axial direction play	0.20 ~ 0.90	
	Backlash (crank gear-camshaft gear)	0.118 ~ 0.242	
	Backlash (driving gear – injection pump gear)	0.102 ~ 0.338	
	Intake valve clearance	0.3	
	Exhaust valve clearance	0.4	
Engine lubricating system	Oil pressure at idling	0.9 ~ 3.0 bar	
	Oil pressure at rated speed operation	3.0 ~ 6.5 bar	
	Oil temperature	less than 110 °C	
	Instantaneous allowable temperature	max. 100 °C	
	Bypass valve opening pressure	1.8 ~ 2.4 bar	
	Pressure regulating valve of oil pump	8.5 ~ 10 bar	
	Spray nozzle		
	Operating pressure	1.6 ~ 1.9 bar	
	Crossing pressure	1.3 ~ 1.6 bar	
	Tip diameter	∅2	
	Backlash (crankshaft gear-oil pump drive gear)	0.10 ~ 0.45	
	Oil pump housing's depth/gear width	43.000 ~ 43.039	43 H8
		42.910 ~ 42.950	43 e8
	Oil pump housing axial play	0.050 ~ 0.128	
Engine cooling system	Cooling water pump shaft diameter	∅21.930 ~ ∅21.950	
	Bearing gap	0.050 ~ 0.091	
	Impeller clearance (impeller – body)	1.0 ~ 1.5	
	Thermostat Operating temperature (°C)	79 °C	
Inspection on compressed pressure	Good	above 28 bar	
	Possible to use	25 ~ 28 bar	
	Need up keep	bellow 24 bar	
	Allowable max pressure difference between cylinders	4 bar	
Fuel system	Overflow valve's operating pressure of injection pump	1.3 ~ 1.8 bar	
	Model of fuel injection pump	Bosch	
	Governor model	GAC electronic	
	Injection nozzle's manufacture	Bosch	
	Injection nozzle hole's diameter	4 – ∅0.40	

1) P158LE : Generator engine assembly

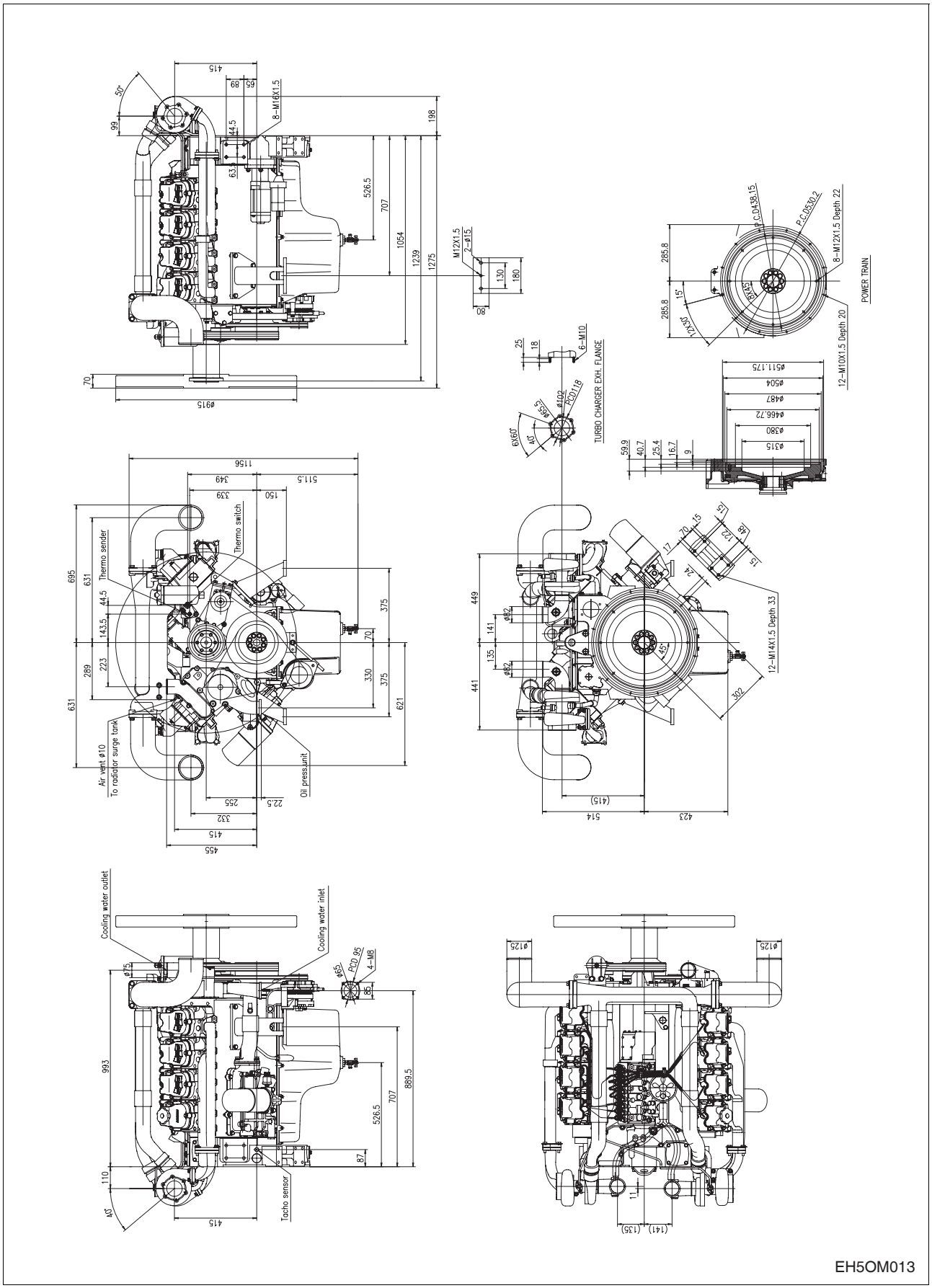

https://truckmanualshub.com/

2) P180LE : Generator engine assembly

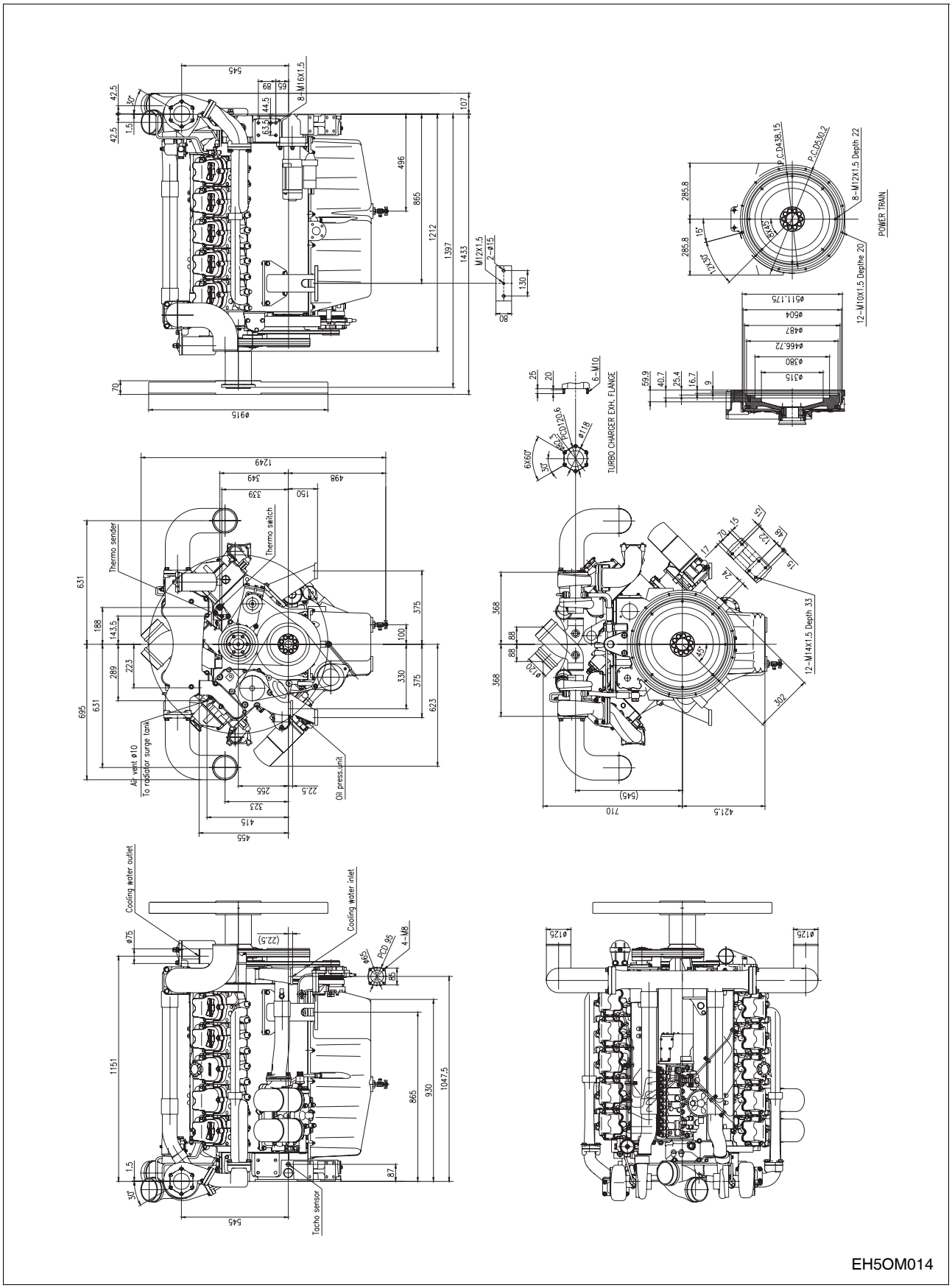

3) P222LE : Generator engine assembly

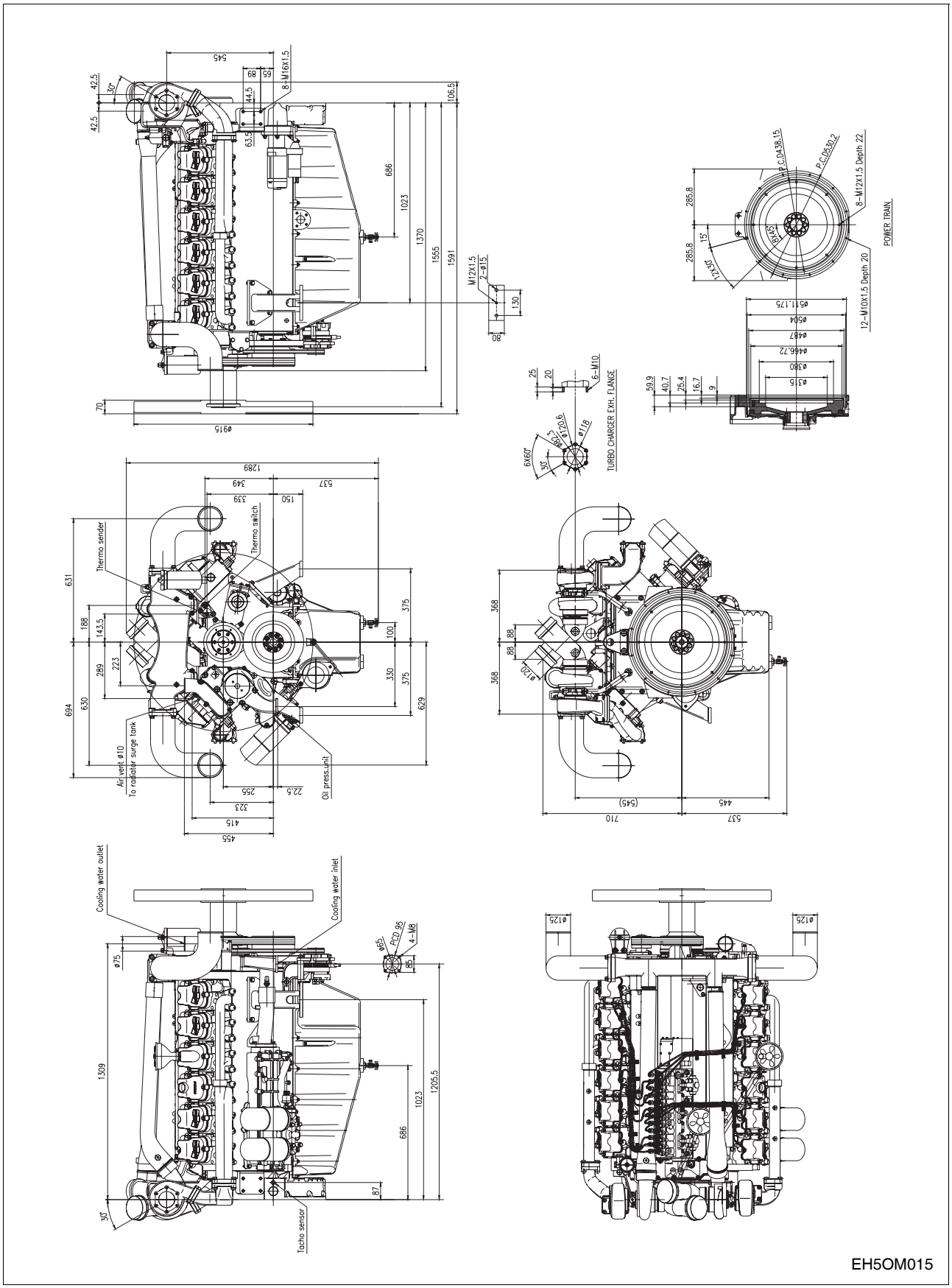

4) PU158TI : Power unit engine assembly

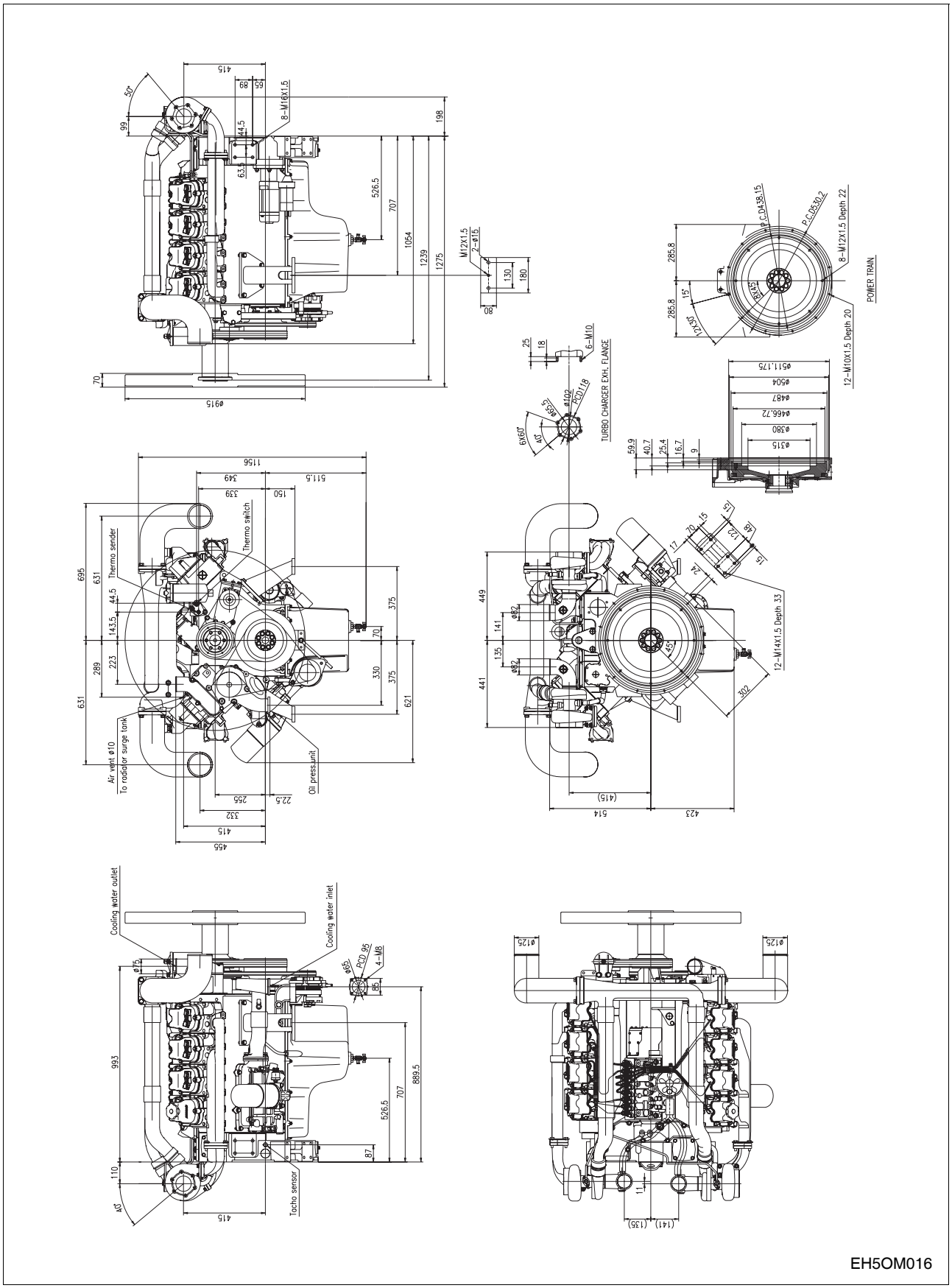

https://truckmanualshub.com/

5) PU180TI : Power unit engine assembly

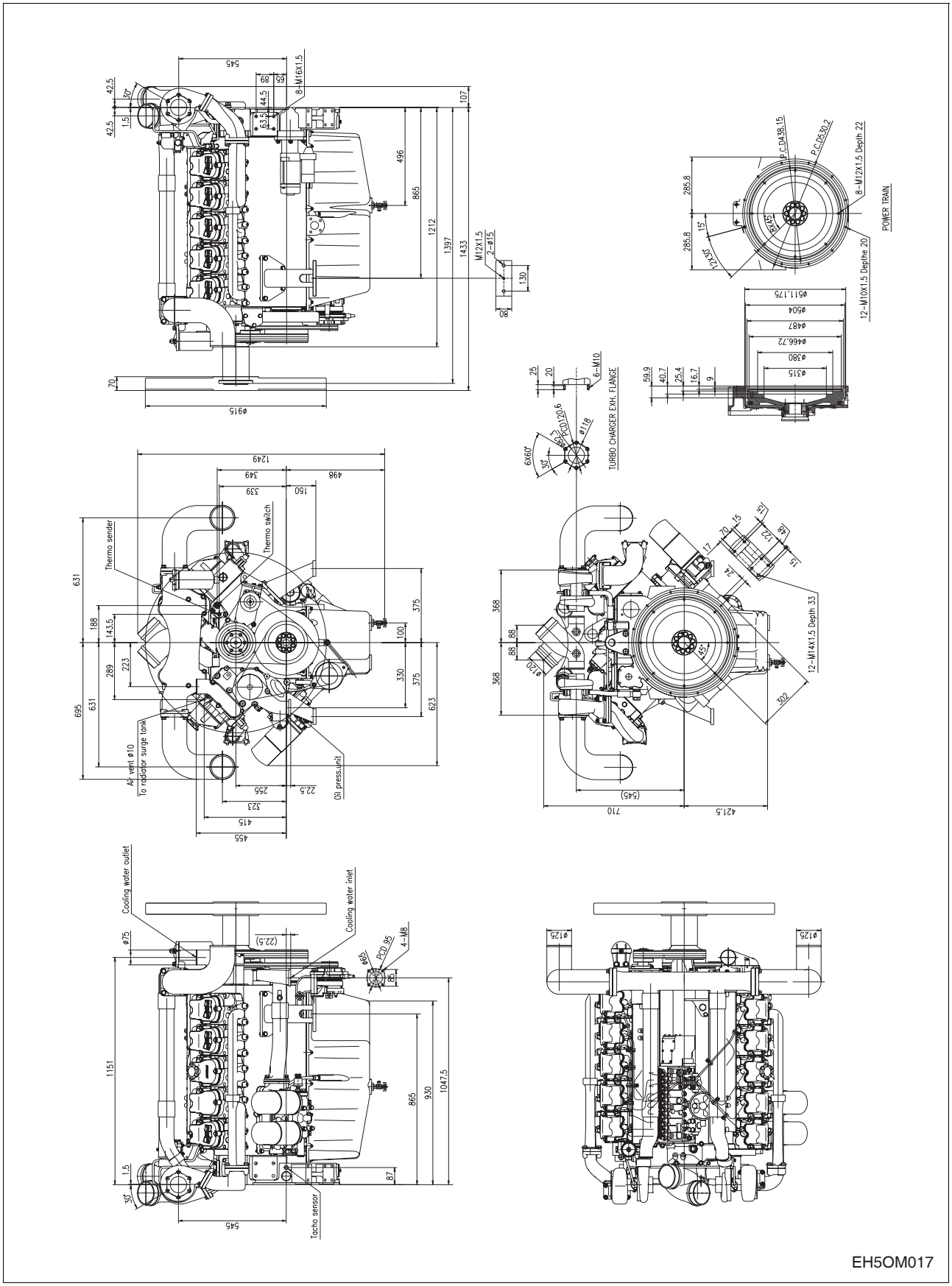
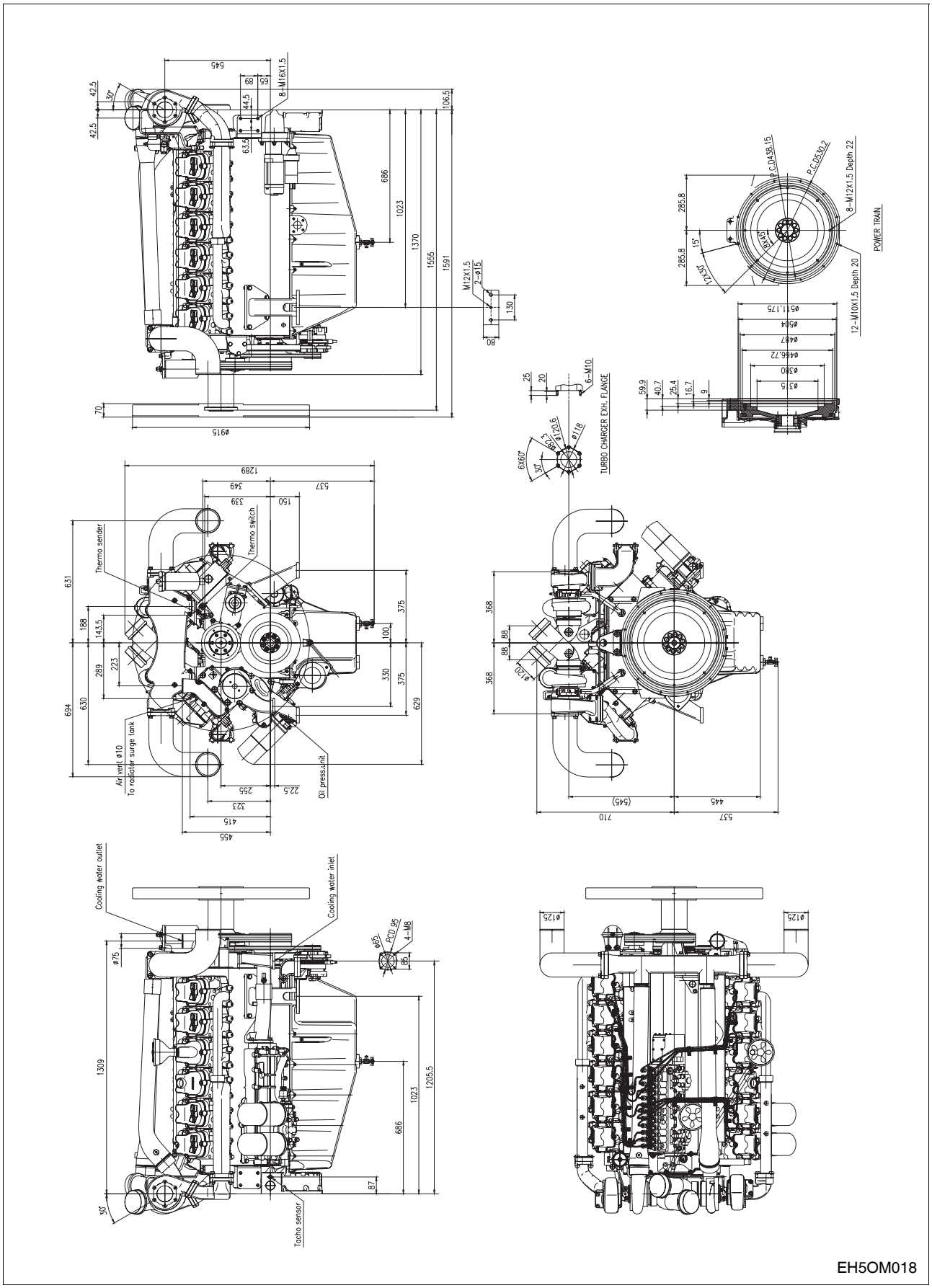
6) PU222TI : Power unit engine assembly