https://truckmanualshub.com/

INSTRUCTION HANDBOOK

Electric Pallet Truck

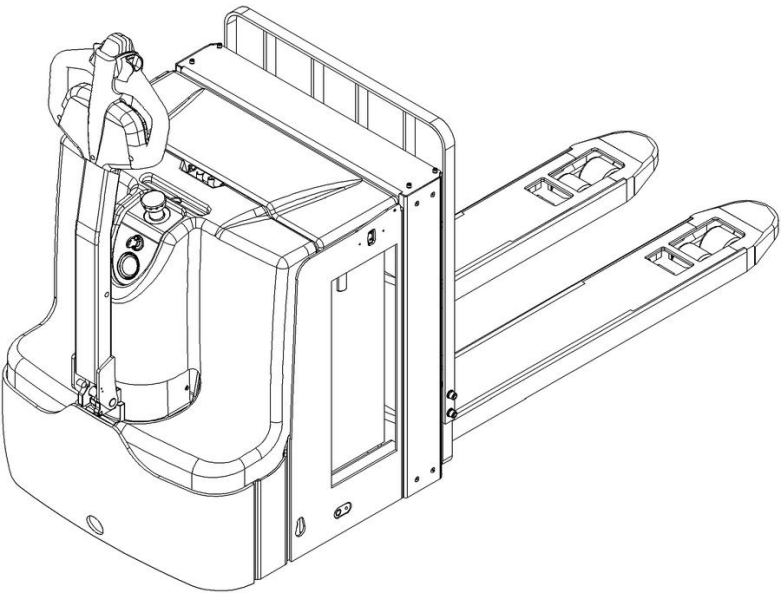

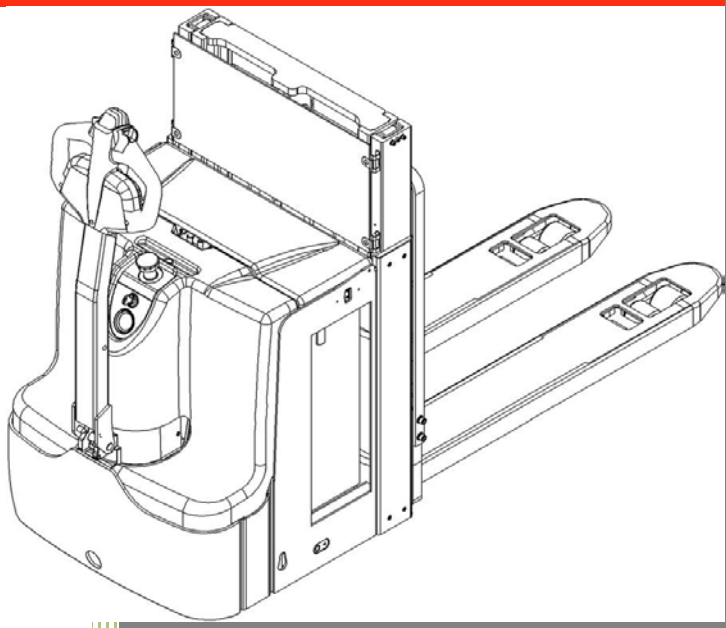

WARNING

Do not use the pallet truck before reading and understanding these operating instructions.

NOTE:

- **Please check the designation of your present type at the last page of this document as well as on the ID-plate.**
- **Keep for future reference.**

Version 10/2017

PT 20I/D(210A)-SMS-004-EN

https://truckmanualshub.com/

https://truckmanualshub.com/

FOREWORD

Before operating the truck, read this ORIGINAL INSTRUCTION HANDBOOK carefully and understand the usage of the truck completely. Improper operation could create danger.
This handbook describes the usage of different electric pallet trucks. When operating and servicing the truck, make sure, that it applies to your type.

Chapter 11 describes specialized stipulations and regulations for the American market. Follow these instructions and stipulations if you operate the truck within the American market!

Keep this handbook for future reference. If it or the warning/caution labels are damaged or got lost, please contact your local dealer for replacement.

This truck complies with the requirements according to EN 3691-1(Industrial trucks- safety requirements and verification, part1), EN 12895 (Industrial trucks- electromagnetic compatibility), EN 12053 (Safety of industrial trucks- test methods for measuring noise emissions), EN 1175-1 (Industrial truck safety – electrical requirements), assumed the truck is used according to the described purpose.
The noise level for this machine is <70 dB(A) according to EN 12053.

ATTENTION:

- Environmentally hazardous waste, such as batteries, oil and electronics, will have a negative effect on the environment, or health, if handled incorrectly.

- The waste packages should be sorted and put into solid dustbins according to the materials and be collected disposal by local special environment protection bureau. To avoid pollution, it’s forbidden to throw away the wastes randomly.

- To avoid leaking during the use of the products, the user should prepare some absorbable materials (scraps of wooden or dry duster cloth) to absorb the leaking oil in time. To avoid second pollution to the environment, the used absorbable materials should be handed in to special departments in terms of local authorities.

- Our products are subject to ongoing developments. Because this handbook is only for the purpose of operating /servicing the pallet truck, therefore please have understanding, that there is no guarantee out of particular features out of this handbook.

NOTE: On this manual, the left sign means warning and danger, which can lead to death or serious injury if not followed.

Copyright

The copyright remains with the company, mentioned on the CE- certificate at the end of this document.

https://truckmanualshub.com/

https://truckmanualshub.com/

TABLE OF CONTENTS

1. CORRECT APPLICATION 5
2. DESCRIPTION OF THE PALLET TRUCK 6
a. Overview of the main components 6
b. Main technical data 7
c. Description of the safety devices and warning labels (Europe and other, excepting USA) 8
d. Identification plate 9
3. WARNINGS, RESIDUAL RISK AND SAFETY INSTRUCTIONS 9
4. COMMISSIONING, TRANSPORTING, DECOMMISSIONING 10
a. Commissioning 10
b. Lifting/transportation 11
c. Decommissioning 11
5. DAILY INSPECTION 11
6. OPERATION INSTRUCTION 12
a. Parking 12
b. Residual lift diagram 13
c. Lifting 13
d. Lowering 13
e. Travelling 14
f. Steering 14
g. Braking 15
h. Malfunctions 15
i. Emergency 15
7. CHARGING AND REPLACEMENT OF BATTERY 15
a. Replacement 16
b. Battery indicator 16
c. Charging 17
8. REGULAR MAINTENANCE 17
a. Maintenance checklist 18
b. Lubricating points 19
c. Check and refill hydraulic oil 19
d. Checking electrical fuses 20
9. TROUBLE SHOOTING 21
10. WIRING/ CIRCUIT DIAGRAM 22
a. Electrical circuit diagram 22
b. Hydraulic circuit 23
11. SPECIALIZED STIPULATIONS FOR US-AMERICAN MARKET 24
a. Foreword/ Compliance 24
b. Description warning labels (only US-market) 25
C. Technical data for US market 28
12. DECLARATION OF CONFORMITY(valid, if sold within the EU) 30

https://truckmanualshub.com/

1. CORRECT APPLICATION

It is only allowed to use this electric pallet truck according to this instruction handbook.

The trucks described in this handbook are self propelled electric power pallet trucks, with electrically powered low height lifting function. The trucks are designed to lift, lower and transport palletized loads.

A wrong usage can cause human injuries or damage equipment.
The operator/ the operating company has to ensure the correct usage and has to ensure, that this pallet truck is used only by staff, which is trained and authorized to use this truck.

The pallet truck has to be used on substantially firm, smooth, prepared, level and adequate surfaces. The truck is intended to be used for indoor applications with ambient temperatures between +5°C and + 40°C and for medium load without crossing permanent obstacles or potholes. Operating on ramps is not allowed. While operating, the load must be placed approximately on the longitudinal centre plane of the truck.
Lifting or transporting people is forbidden.

If used on tail lifts or loading ramps, please ensure that these are used correctly according to the operating instructions.

The capacity is marked on capacity sticker as well on the Identification plate. The operator has to consider the warnings and safety instructions.
Operating lighting must be minimum 50 Lux.

<u>Modification</u>
No modifications or alterations to this pallet truck which may affect, for example, capacity, stability or safety requirements of the truck, shall be made without the prior written approval of the original truck manufacturer, its authorized representative, or a successor thereof. This includes changes affecting, for example braking, steering, visibility and the addition of removable attachments. When the manufacturer or its successor approves a modification or alteration, they shall also make and approve appropriate changes to capacity plate, decals, tags and operation and maintenance handbooks.

By not observing these instructions, the warranty becomes void.

https://truckmanualshub.com/

2. DESCRIPTION OF THE PALLET TRUCK

a. Overview of the main components

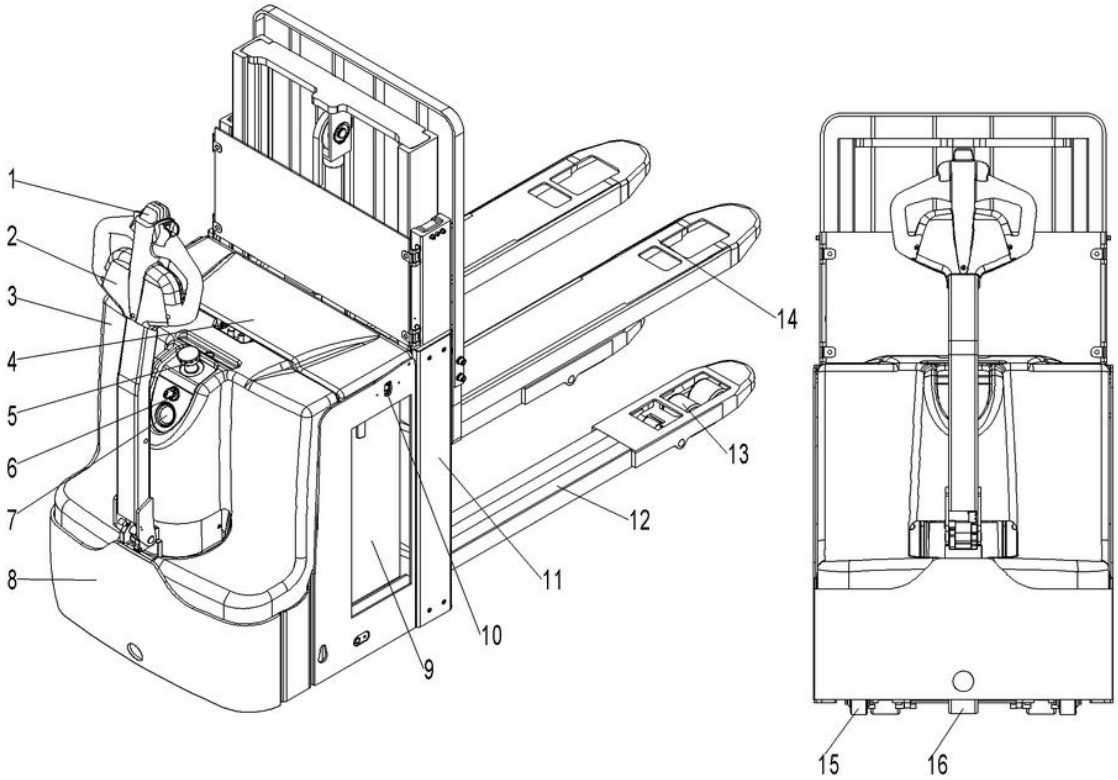

Fig. 1: Overview main components

1. Safety (belly) button
2. Tiller
3. Main cover
4. Battery cover
5. Emergency button
6. Key switch
7. Indicator
8. Truck body
9. Battery
10. Switch
11. Mast
12. Support arms
13. Load roller
14. Mast
15. Steering wheel
16. Drive wheel

https://truckmanualshub.com/

b. Main technical data

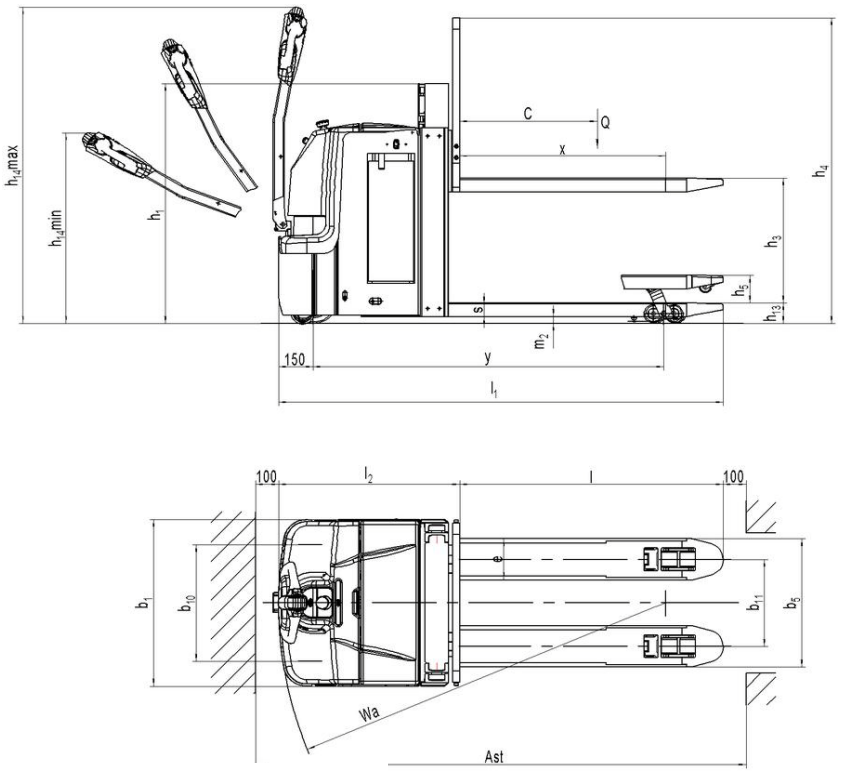

Fig. 2: Technical data

Table 1: Main technical data for standard version

Type sheet for industrial truck acc. to VDI 2198							
Distinguishing mark	1.2	Manufacturer`s type designation		PT 20I	PT20D		
	1.3	Power(battery,diesel,petrol gas,manual)		Battery			
	1.4	Operator type		Pedestrian			
	1.5	Load Capacity / rated load	Q (t)	2.0			
		Load capacity at mast lift	Q (t)	1.0 1)			
		Load capacity at support arm lift	Q (t)	2.0 1)			
	1.6	Load centre distance	C (mm)	600			
	1.8	Load distance, centre of drive axle to fork	X(mm)	916			
	1.9	Wheelbase	Y (mm)	1532			
Weight	2.1	Service weight (incl. battery)	kg	855	990	1010	1060
	2.2	Axle loading, laden front/rear	kg	845/2010	880/2110	890/2120	925/2135
	2.3	Axle loading, unladen front/ rear	kg	612/243	648/342	658/352	695/365
Tires, chassis	3.1	Tires		PU			
	3.2	Tire size, front	∅ x w (mm)	∅ 230 x70			
	3.3	Tire size, rear	∅ x w (mm)	∅ 80x70			
	3.4	Additional wheels (dimensions)	∅ x w (mm)	∅ 100x40			
	3.5	Wheels, number front/ rear(x=driven wheels)		1x+2/4			
	3.6	Tread, front	b10 (mm)	510			
	3.7	Tread, rear	b11 (mm)	380			
Dimensions	4.2	Lowered mast height	h_1 (mm)	855	1178	1378	1233
	4.4	Lift height	h_3 (mm)	550	1400	1800	2300
	4.5	Extended maximal height	h_4 (mm)	1558	2528	2928	3475
	4.6	Initial lift height	h_5(mm)	120			

https://truckmanualshub.com/

	4.9	Height of tiller in drive position min./ max.	h_{14} (mm)	820/1335	
	4.15	Lowered height	h_{13} (mm)	88	
	4.19	Overall length	l_1 (mm)	1940	1955
	4.20	Length to face of forks	l_2 (mm)	790	
	4.21	Overall width	b_1 (mm)	729	
	4.22	Fork dimensions	s/e/l (mm)	60 / 180 / 1150	
	4.25	Distance between fork-arms	b_5 (mm)	560/530	
	4.32	Ground clearance, centre of wheelbase	m_2 (mm)	28	
	4.33	Aisle width for pallets 1000x1200 crossways	Ast (mm)	2040	2155
	4.34	Aisle width for pallets 800x1200 lengthwise	Ast (mm)	2190	2205
	4.35	Turning radius	Wa(mm)	1682	
Performance	5.1	Travel speed, laden/ unladen	km/h	6.0/6.0	
	5.2	Lift speed, laden/ unladen	mm/s	85/140	
	5.3	Lowering speed, laden/ unladen	mm/s	80/65	
	5.8	Max. gradeability, laden/ unladen	%	8/20	
	5.10	Service brake		Electromagnetic brake	
Motors	6.1	Drive motor rating S2 60min	kW	1.3	
	6.2	Lift motor rating at S3 7.5%	kW	2.2	
	6.3	Battery acc. to DIN 43531/ 35/ 36 A, B, C		3VBS	
	6.4	Battery voltage, nominal capacity K5	V/ Ah	24/210	
	6.5	Battery weight	kg	185	
	6.6	Energy consumption acc: to VDI cycle	kWh/h	1.0	
Additional data	8.1	Type of drive control		AC-speed control	
	8.4	Sound level at driver`s ear acc. to EN 12053	dB(A)	<70	
1) in double-deck operation: mast lift 1.0t, support arms lift 1.0t					

c. Description of the safety devices and warning labels (Europe and other, excepting USA)

For the USA–market, the description of the safety and warning labels is mentioned in chapter 11.

A Sticker to read and follow this instruction
B "No passengers" decal
C Capacity sticker
D Crane hook label
E Identification plate (ID-plate)
F Sign oil filling point
M Warning decal: Do not step under or on the forks
Q Warning decal: When truck is used only as stacker, driving is prohibited when lifting height with load is higher than 500mm.
R Warn sticker

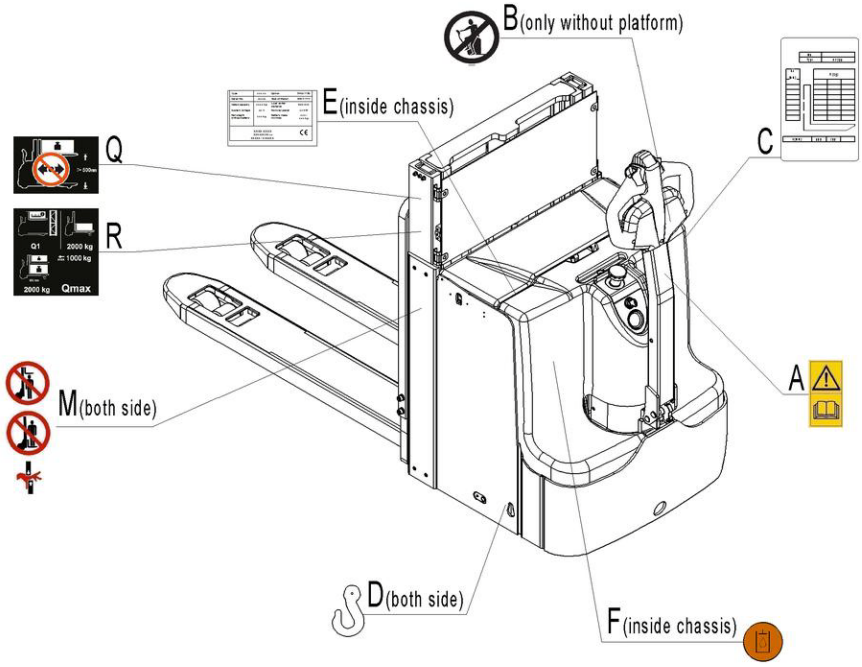

Fig.3: Safety and warning labels

https://truckmanualshub.com/

The truck has a key switch (6) which stops all lifting-, lowering-, driving- functions and engages the failsafe electromagnetic brake when it is pushed. The truck is equipped with a safety (belly) button (1) which switches the driving direction away from the operator, if the truck travels towards the operator and the tiller is activated in the tillers operating zone. Follow also the instructions given on the decals. Replace the decals if they are damaged or missing.

d. Identification plate

1 Designation, type
2 Serial number
3 Rated capacity in kg
4 Supply voltage in V
5 Own mass (self weight) in kg without battery
6 Name and address of manufacturer)
7 Battery weight minimum/ maximum
8 Nominal power in kW
9 Load center distance
10 Manufacturing data
11 Option

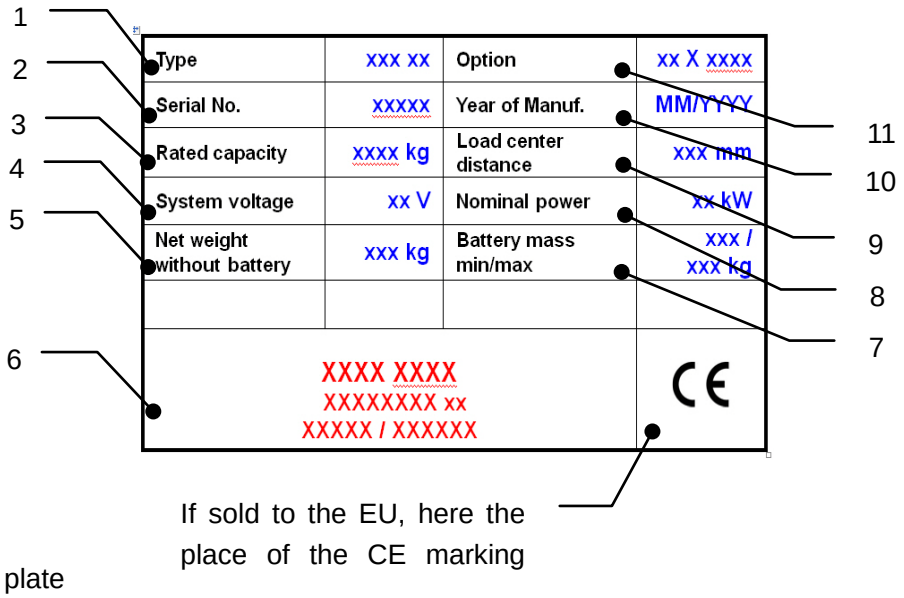

If sold to the EU, here the place of the CE marking

Fig. 4: Identification plate

3. WARNINGS, RESIDUAL RISK AND SAFETY INSTRUCTIONS

DO NOT

- Put foot or hand under or into the lifting mechanism.
- Allow other person than the operator to stand in front of or behind the truck when it is moving or lifting/lowering.
- Overload the truck.
- Put foot in front of the wheels, could result in injury.
- Lift people. People could fall down and suffer severe injury.
- Push or pull loads.
- Use this truck on ramps.
- Side or end load. Load must be distributed evenly on the forks.

https://truckmanualshub.com/

- Use the truck to load unstable, unbalanced goods.
- Use truck without manufacturer's written consent.
- Lifted loads could become unstable at wind forces. In the case of wind forces, please do not lift the load.
- When truck is used only as stacker, driving is prohibited when lifting height with load is higher than 500mm.
- When truck is used as pallet truck and stacker at the same time, load on the bottom fork must be heavier than the top fork.

Watch difference in floor levels when driving. Load could fall down or the truck could get uncontrollable.

Keep watching the condition of load. Stop operating the truck if load becomes unstable.

Stop the truck by brake and activate the emergency button (5) by pushing when load sliding on or off the truck. If the truck has any malfunctions, follow chapter 6.

Practice maintenance work according to regular inspection. This truck is non watertight, please use the truck in dry condition. Prolonged continuous operation might cause damage of the power pack. Stop operation if temperature of hydraulic oil is too high.

- When operating the electric pallet truck, the operator has to wear safety shoes.
- The truck is intended to be used for indoor applications with ambient temperatures between +5°C and +40°C.
- The operating lighting must be minimum 50 Lux.
- It is not allowed to use the truck on ramps.
- To prevent unintended sudden movements without operating the tuck (i.e. from another person, etc.) switch off the truck when not operating it.

4. COMMISSIONING, TRANSPORTING, DECOMMISSIONING

a. Commissioning

Table 2: Commissioning data

Type	PT 20I	PT20D		PT20H
Commissioning weight [kg]	855 kg	990 kg	1010 kg	1060 kg
Dimensions [mm]	1934X729X895	1940X729X1178	1940X729X1378	1955X729X1233

After receiving our new pallet truck or for re-commissioning you have to do following before (firstly) operating the truck:

- Check if are all parts included and not damaged
- Eventually installation of the multifunction tiller
- Eventually installation and charging the batteries (follow chapter 7)
- Do the work according to the daily inspections as well as functional checks.

https://truckmanualshub.com/

b. Lifting/transportation

For transporting, remove the load, lower the forks to the lowest position and fix the truck safely with dedicated lifting gear according to the following figures.

Lifting

USE DEDICATED CRANE AND LIFTING EQUIPMENT
DO NOT STAND UNDER THE SWAYING LOAD
DO NOT WALK INTO THE HAZARDOUS AREA DURING LIFTING

Park the truck securely and lash the truck according to the points identified in fig. 5. Lift the truck to its destination and place the truck securely before removing the lifting gear. Use the lashing points according to the fig. 5.

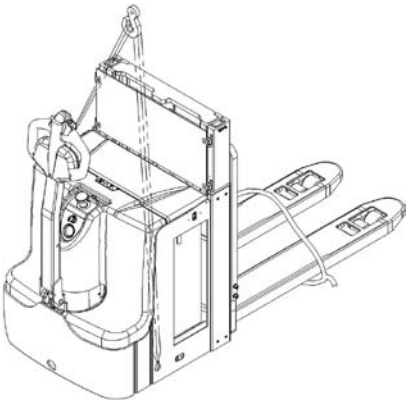

Fig.5 Lifting with a crane

Transportation

DURING TRANSPORTATION ON A LORRY OR TRUCK ALWAYS FASTEN THE TRUCK SECURELY

Lower the forks and park the truck securely.
Fasten the truck according to fig. 5 by fixing dedicated lashing belts to each side of the trucks crane hook holes and fasten the other side to the transporting truck.

c. Decommissioning

For storage, remove the load, lower the truck to the lowest position, grease all in this handbook mentioned greasing points (regular inspection), eventually protect the truck against corrosion and dust. Remove the batteries and jack the truck safely, so that there will be no flattening after storage.
For final decommissioning hand the truck to a designated recycling company. Oil, batteries and electric components must be recycled due to legal regulations.

5. DAILY INSPECTION

This chapter describes pre-shift checks before putting the truck into operation.
Daily inspection is effective to find the malfunction or fault on this truck. Check the truck on the following points before operation.
Remove load from truck and lower the forks.

DO NOT USE THE TRUCK IF ANY MALFUNCTION IS FOUND.

- Check for scratches, deformation or cracks.
- Check if there is any oil leaking from the cylinder.
- Check the vertical creep of the truck.

https://truckmanualshub.com/

- Check the smooth movement of the wheels.
- Check the function of the emergency brake by activating the emergency button.
- Check, the tiller proximity switch braking function
- Check the lifting and lowering functions by operating the buttons.
- Check if all bolts and nuts are tightened firmly.
- Visual check if there are any broken hoses or broken electric wires.

6. OPERATION INSTRUCTION

BEFORE OPERATING THIS TRUCK, PLEASE FOLLOW THE WARNINGS AND SAFETY INSTRUCTIONS (CHAPTER 3). BE SURE THE GOODS ARE STABILITY PLACED ON THE PALLET AND MAKE DAILY CHECKS.

Make sure, that the load is palletized and stable and that the daily inspection is carried out.
Insert the key switch (6) and turn on it.
Press the horn button (18) to activate the audible warning signal.

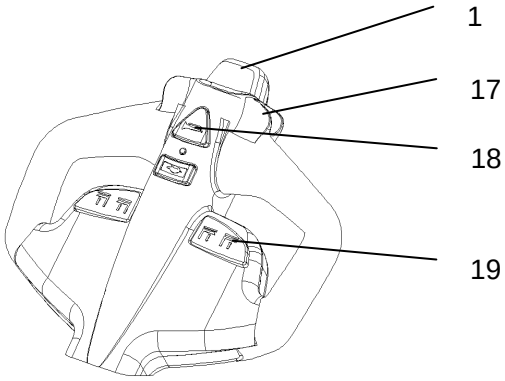

Fig.6: Tiller operating controls

a. Parking

DO NOT PARK THE TRUCK ON INCLINED SURFACES

The truck is equipped with an electromagnetic fail safe stopping and parking brake.
Be sure to lower the forks fully. Press the emergency switch (5), rotate the key counterclockwise for 90 ° then remove the key.

https://truckmanualshub.com/

b. Residual lift diagram

The residual lift diagram indicates the maximum capacity Q [kg] for a given load centre c [mm] and the corresponding lift height H [mm] for the truck with horizontal load.
The white markings on the mast indicate if the specific lifting limits reached.
For instance with a load centre of gravity distance c of 600 mm and a maximum lift height H of 1600 mm, the max. Capacity Q is 1000 kg.
Figure 8 shows when the truck is used as pallet truck and stacker at the same time, the load capacity of fork and pallet is both 1000kg, so the total load capacity is 2000kg. When the fork lift height is within 120mm, the maximum stack height is 1800mm.

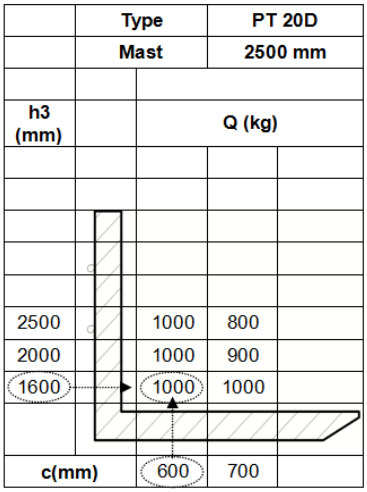

Fig. 7: Residual lift diagram (stacking)

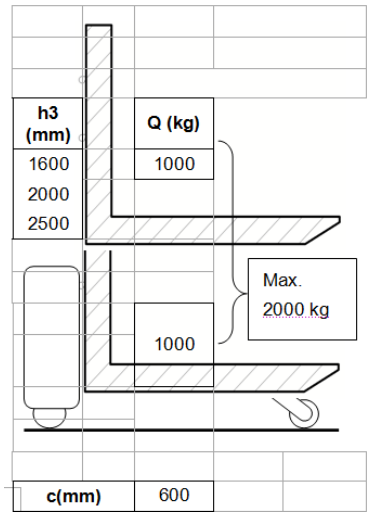

Fig. 8: Residual lift diagram (double lifting)

c. Lifting

DO NOT OVERLOAD! THE MAX. CAPACITY OF THIS TRUCK IS 2000KG

Travel with the forks lowered fully underneath the pallet until lift the load. Press the lifting button (19) until you reach the desired lifting height.

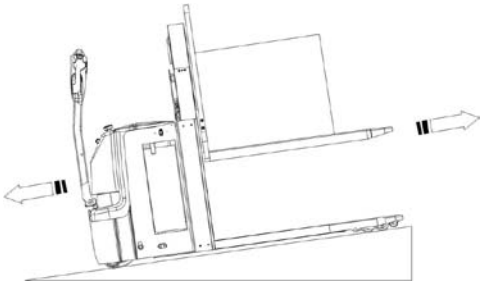

Fig. 9: Load facing uphill

d. Lowering

Press the lowering button (19) carefully.
Lower the load until the forks are near the chassis, and then drive the truck carefully out of the load area.

https://truckmanualshub.com/

e. Travelling

TRAVEL ON SLOPE ONLY WITH THE LOAD FACING UPHILL.
DO NOT TRAVEL ON SLOPE WHEN EXCEEDING THE SPECIFIED TECHNICAL DATA.
WHEN TRUCK IS USED ANLY AS STACKER, TRAVELLING IS ONLY ALLOWED IF THE FORKS ARE LOWERED DOWN TO THE LIFTING POINT (<500MM). WHEN LIFTING HEIGHT IS HEIGHER THAN 500MM, TRAVELLING SPEED IS 2.5km/h, ACCELERATION WILL DECREASE.
WHEN TRUCK IS USED AS PALLET TRUCK AND STACKER AN THE SAME TIME, LOWER THE TOP FORK AS LOWER AS POSSIBLE, BUT DO NOT TOUCH THE LOAD ON THE BOTTOM FORK.

After starting the truck by turning on the key switch (6), move the tiller to the operating zone (‘F’, fig.10). Turn the accelerator button to the desired direction forward ‘Fw.’ or backwards Bw.’(fig. 10).

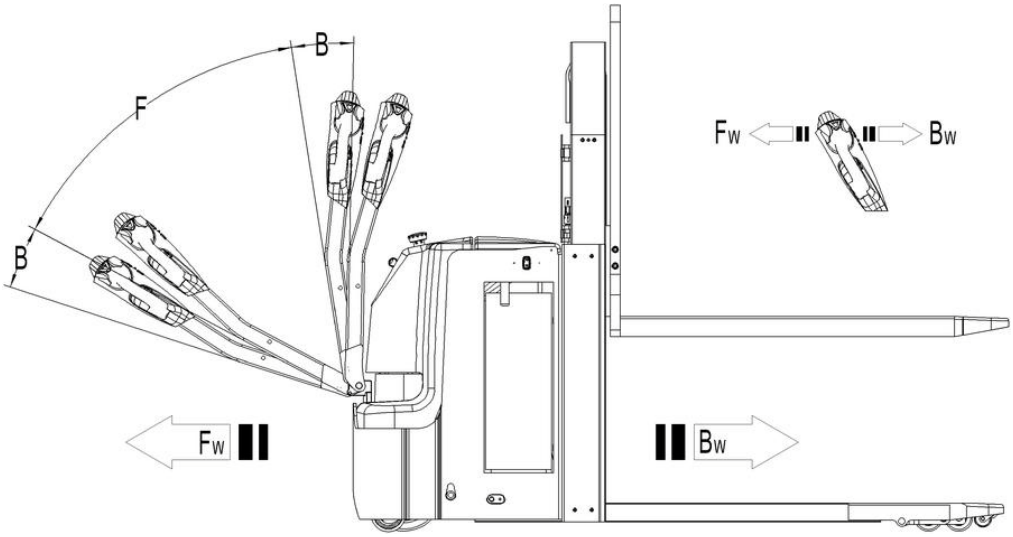

Fig. 10: Operating direction

Control the travelling speed by moving the accelerator button (17) carefully until reaching the desired speed.
If you move the accelerator button back to the neutral position, the controller decelerates the truck until it stops. If the truck stopped, the parking brake will be engaged.
Drive the truck carefully to the destination. Watch the route conditions and adjust the travelling speed with the accelerator-button.

f. Steering

Make the truck turn by moving the tiller to the left or right side.

https://truckmanualshub.com/

g. Braking

THE BRAKING PERFORMANCE DEPENDS ON THE TRACK CONDITONS AND TRHE LOAD CONDITONS OF THE TRUCK

The braking function can be activated in several ways:

- By moving the accelerator button (17) back to the initial ‘0’ position or by releasing the button, the regenerative braking is activated. The truck brakes until it stops.
- By directly moving the accelerator button (17) from one driving direction to the opposite direction, the truck brakes regenerative will be activated until it starts travelling into the opposite direction.
- The truck brakes, if the tiller is moved up or down to the braking zones (‘B’). If the tiller is released, the tiller moves automatically up to the upper baking zone (‘B’). The truck brakes until it stops.
- The safety (belly) button (1) prevents the operator from being crushed. If this button is activated, the truck decelerates and/or starts travelling into the backwards direction (‘Bw.’) for a short distance and stops. Please consider, that this button also operates, if the truck is not travelling and the tiller is in the operating zone.

h. Malfunctions

If there are any malfunctions or the truck is inoperative, please stop using the truck and push the emergency button (5). If possible, park the truck on a safe area and rotate the key (6) counterclockwise as well as remove it.
Immediately inform the manager or aftersales service employees. If necessary, tow the truck out of the operating area by dedicated towing/lifting equipment.

i. Emergency

Keep a safe distance in emergencies or in the event of tip over. If possible, push the emergency button (8) and all electrical functions will be stopped.

7. CHARGING AND REPLACEMENT OF BATTERY

- Only qualified personnel are allowed to service or charge the batteries. You must observe the instructions of this handbook and from the battery- manufacturer.
- Recycling of batteries undergoes national regulations. Please follow these regulations.
- While handling batteries, open fire is prohibited, for gases could cause explosion!
- In the area of battery charging neither burning materials nor burning liquids is allowed. No smoking and ensure good ventilation.
- Park the truck securely before starting charging or installing/changing the batteries
- Before finishing the maintenance work, make sure that all cables are connected correctly and will not disturb other components of the truck.

https://truckmanualshub.com/

Regarding as standard batteries, this truck is equipped with following lead batteries:

1 pc 3VBS 24V/210Ah

ONLY LEAD BATTERIES ARE ALLOWED TO USE.
THE WEIGHT OF BATTERIES HAS SOME INFLUENCE ON OPERATING BEHAVIOR OF THE TRUCKS.
PLEASE CONSIDER THE MAXIMUM OPERATING TEMPERATURE OF THE BATTERIES.

a. Replacement

Park the truck securely, turn off the key switch (6) and push the emergency button (5) to off the truck. Open the battery cover (20), disconnect the battery plug (22) and battery lock (21), then move the battery (23) out according to fig. 11.

Installation is in the reverse order of removal.

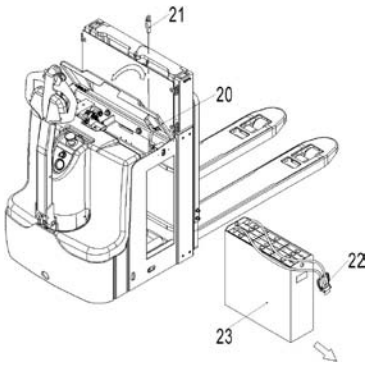

Fig. 11: Battery replacement

b. Battery indicator

Discharge status is indicated by ten red LED segments.

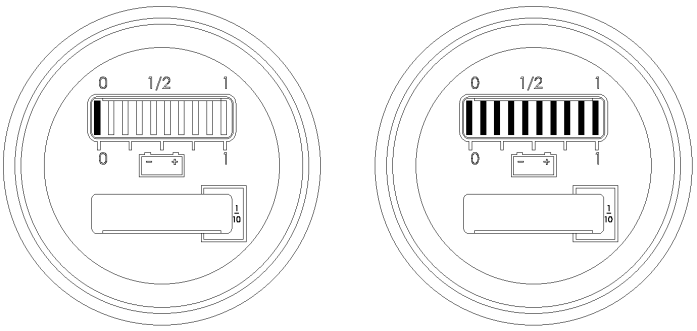

Battery discharged Battery charged

Fig.12: Battery discharge indicator

Only when the battery is properly charged, the most right LED lit. As the battery's state-of-charge decreases, LEDs light up successively, only one on at a time.

- The 2nd from left LED flashes, indicating "energy reserve" (70% depth of discharge).
- The 2 most left LEDs alternately flash, indicating "empty" (80% depth of discharge).

https://truckmanualshub.com/

c. Charging

- Only well-matched charger can be use to charge the battery.
- Before using the charger, please fully understand the instructions of the charger instructions.
- Always follow these instructions!
- The room, where you are charging must be well ventilated.
- The exactly charge status can be only checked from the discharge indicator. To control the status, you must interrupt charging process and the start truck.

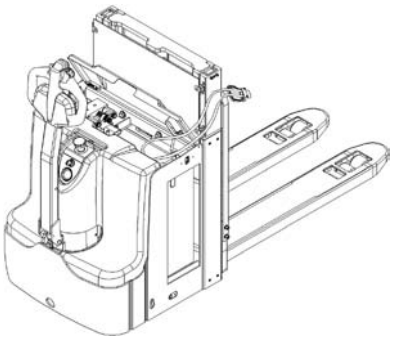

Fig.13: Battery charging

Park the truck at a dedicated secure area with a dedicated power supply.
Lower the forks and remove the load.
Remove the battery cover.
Off the truck and connect the battery plug to the port of external charger. Then connect the charger to the main power supply.
The charger starts charging.
Disconnect the battery plug after charge is completed, disconnect the connector from the socket and place it in the designated pocket.
Connect the battery plug with the plug on the truck, and install the battery cover back.

8. REGULAR MAINTENANCE

- Only qualified and trained personnel are allowed to do maintenance on this truck.
- Before maintaining, remove the load from the forks and lower the forks to the lowest position.
- If you need to lift the truck, follow chapter 4 by using designated lashing or jacking equipment. Before working, put safety devices (for instance designated lift jacks, wedges or wooden blocks) under the truck to protect against accidental lowering, movement or slipping.
- Please pay attention to maintain the tiller lever. The gas pressure spring is pre-loaded by compression, carelessness can cause injury.
- Use spare parts which are approved and released by your dealer.
- Please consider that oil leakage of hydraulic fluid can cause failures and accidents.
- Only trained service technicians are allowed to adjust the pressure valve.

If you need to change the wheels, please follow the instructions above. The castors must be round and have no abnormal abrasion.
Check the emphasized items on the maintenance checklist.

https://truckmanualshub.com/

a. Maintenance checklist

Table 3: Maintenance checklist

		Interval(Month)			
		1	3	6	12
Hydraulic system					
1	Check the hydraulic cylinder(s), piston for damage, noise and leakage		●		
2	Check the hydraulic joints and pipes for damage and leakage		●		
3	Inspect the hydraulic oil level, refill if necessary		●		
4	Refill the hydraulic oil (12 month or 1500 working hours)				●
5	Check and adjust the function of pressure valve (2000kg +0/+10%)				●
Mechanical system					
6	Inspect the forks for deformation and cracks		●		
7	Check the chassis for deformation and cracks		●		
8	Check if all screws are fixed		●		
9	Check the push rods for deformation and damages		●		
10	Check the gearbox for noise and leakage		●		
11	Inspect the wheels for deformation and damages		●		
12	Inspect and lubricate the steering bearing				●
13	Inspect and lubricate the pivot points		●		
14	Lubricate the grease nipples	●			
Electrical system					
15	Inspect the electric wiring for damage		●		
16	Check the electric connections and terminals		●		
17	Test the emergency switch function		●		
18	Check the electric drive motor for noise and damages		●		
19	Test the display		●		
20	Check, if correct fuses are used		●		
21	Test the warning signal		●		
22	Check the contactor(s)		●		
23	Check the frame leakage (insulation test)		●		
24	Check function and mechanical wear of the driving controller		●		
25	Check the electrical system of the drive motor		●		
Braking system					
26	Check brake performance, if necessary replace the brake disc or adjust the gap		●		
Battery					
27	Check the battery voltage		●		
28	Clean and grease the terminals and check for corrosion and damages		●		
29	Check the battery housing for damage		●		
30	Check the battery and if necessary refill with distillated water	●			
Charger					
31	Check the main power cable for damages			●	
32	Check the start-up protection device during charging			●	
Function					

https://truckmanualshub.com/

33	Check the horn function	●			
34	Check the air gap of the electromagnetic brake	●			
35	Test the emergency braking	●			
36	Test the reverse and regenerative braking	●			
37	Test the safety (belly) button function	●			
38	Check the steering function	●			
39	Check the lifting and lowering function	●			
40	Check the tiller proximity switch function	●			
General					
41	Check if all labels are legible and complete	●			
42	Inspect the castors, adjust the height or replace them if worn out.		●		
43	Carry out a test run	●			

b. Lubricating points

Lubricate the marked points according to the maintenance checklist. The required grease specification is: DIN 51825, standard grease.

1. Load roller bearing
2. Roller
3. Support castor bearing
4. Steering bearing
5. Gearbox
6. Pump

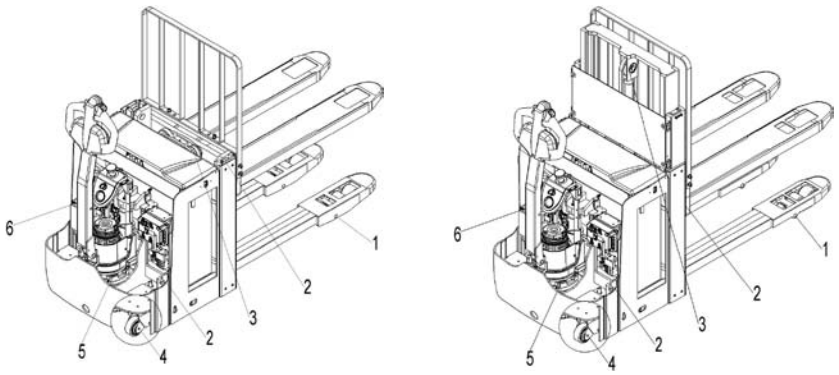

Fig. 14: Lubricating points

c. Check and refill hydraulic oil

The required hydraulic fluid- type is:

- H-LP 46, DIN 51524
- Viscosity is 41.4 - 47
- Amount depending on the type 1 L

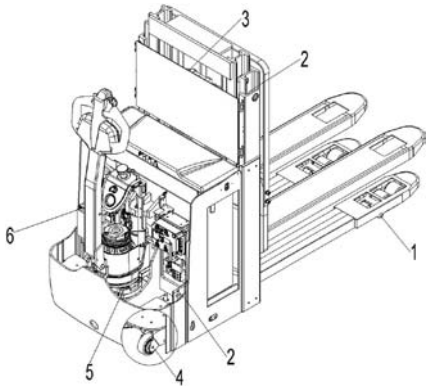

Waste material like oil, used batteries or other must be probably disposed and recycled according to the national regulations and if necessary brought to a recycling company.
The oil level height shall be in the not lifted position min.0.6L to 0.8L.
If necessary add oil at the filling point.

https://truckmanualshub.com/

d. Checking electrical fuses

Remove the main cover. The fuses are located in the position as fig. 15 shows.

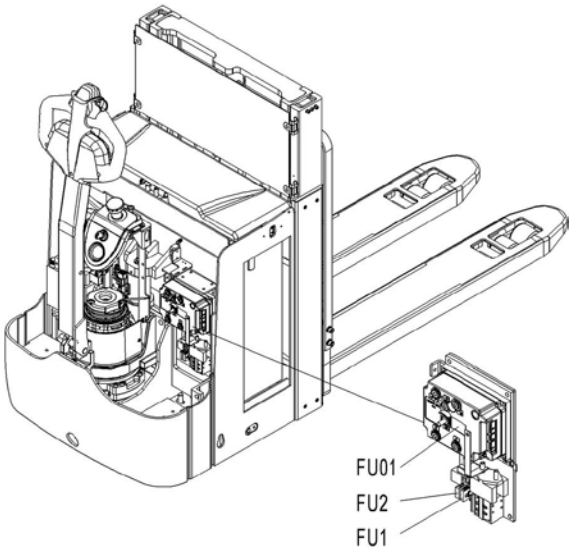

Fig. 15: Location fuses

Table 4: Size of fuses

	Size
FU1	10 A
FU2	10 A
FU01	350A

https://truckmanualshub.com/

9. TROUBLE SHOOTING

- If the truck has malfunctions follow the instructions, mentioned in chapter 6.

Table 5: Trouble shooting

TROUBLE	CAUSE	REPAIR
Load can’t be lifted	Load is too heavy	Lift only the max. capacity mentioned on the ID-plate
	Battery discharged	Charge the battery
	Lifting fuse faulty	Check and replace the lifting fuse
	Hydraulic oil level is too low	Check and refill hydraulic oil
	Oil leakage	Check and repair the hoses and/or the sealing of the cylinder
Oil leakage from air breathing	Excessive quantity of oil.	Reduce oil quantity.
Truck not starts operating	Battery in charging	Charge the battery completely and remove the main power plug form the electrical socket
	Battery is not connected	Connect the battery correctly
	Fuse faulty	Check and replace fuses
	Low power of battery	Charge the battery
	Combined emergency button is activated	De-activate the combined emergency button by insert the key and pull out the knob.
	Tiller in the operating zone	Move the tiller firstly to the braking zone.

If the truck has malfunctions and can’t be operated out of the working zone, jack the truck up and go with a load handler under the truck to ensure the truck securely. Then move truck out of the aisle.

https://truckmanualshub.com/

10. WIRING/ CIRCUIT DIAGRAM

a. Electrical circuit diagram

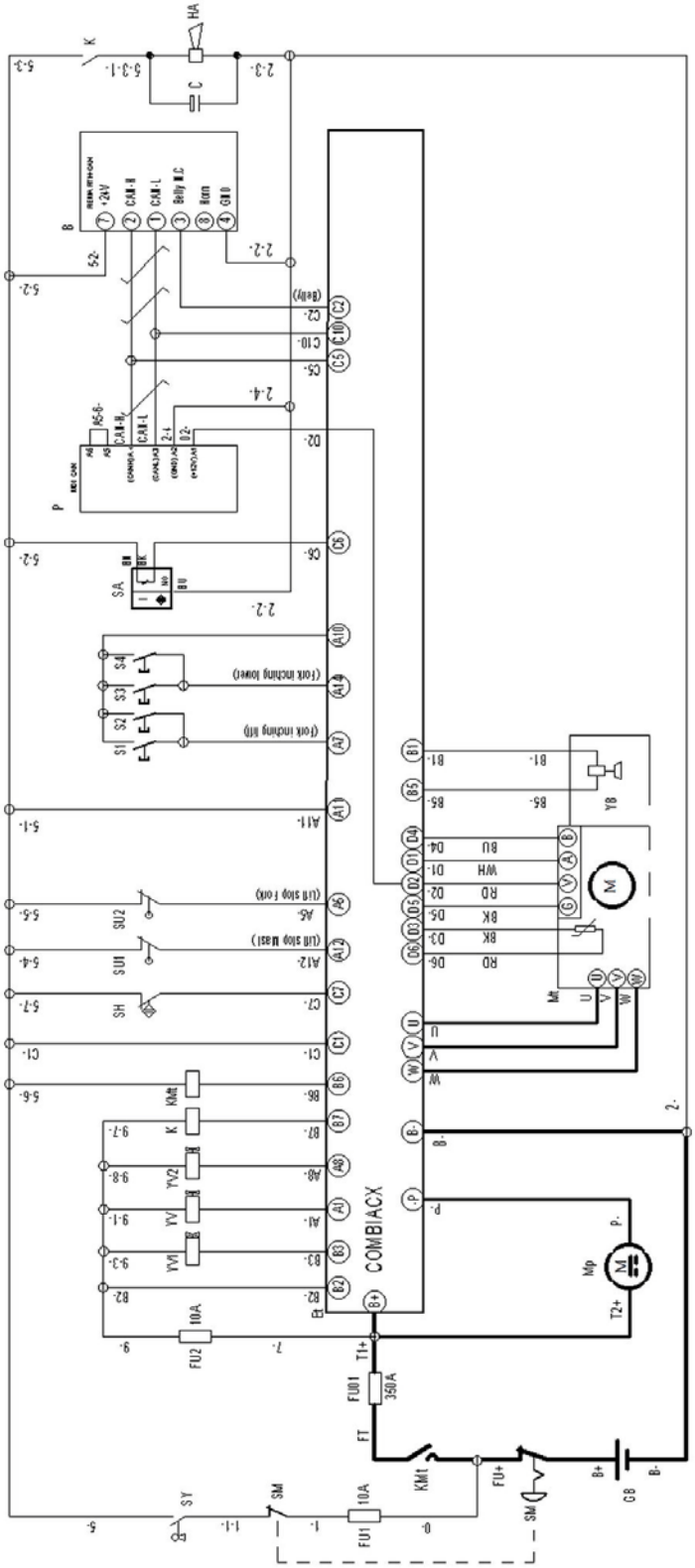

FU 1:	10A
FU 2:	10A
FU 01:	350A

Fig. 16: Electric diagram

https://truckmanualshub.com/

b. Hydraulic circuit

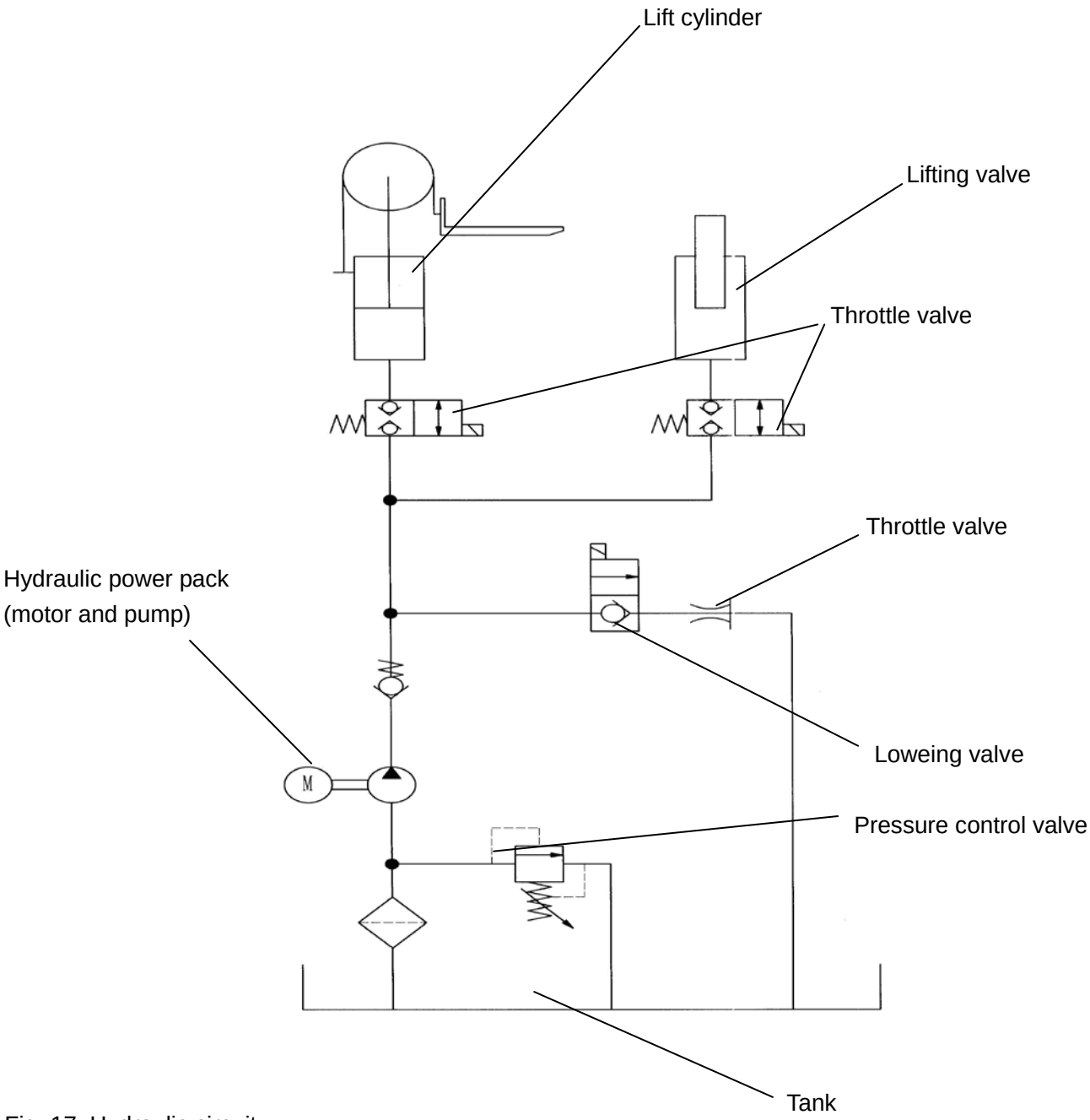

Fig. 17: Hydraulic circuit

https://truckmanualshub.com/

11. SPECIALIZED STIPULATIONS FOR US-AMERICAN MARKET

The content in this chapter is specialized for US-American market.

a. Foreword/ Compliance

Operating this truck requires knowledge which can be acquired from this instruction handbook. This handbook must be kept available throughout the entire period of use of the industrial truck.

IT IS LAW: YOU MUST BE TRAINED AND CERTIFIED TO OPERATE THIS TRUCK! READ AND OBEY ALL WARNINGS AND INSTRUCTIONS IN THIS MANUAL AND ON THE TRUCK!

Only properly trained operators are allowed to operate a powered industrial truck. Your employer must train you and certify, that you are qualified to operate this truck (required by OSHA § 1910.178). The training must satisfy OSHA requirements and as minimum the topics mentioned in this handbook. Depending on the context in this operating manual, the user can refer to several people, including the owner of the truck, anyone who leases or borrows this truck, and the operator as defined in ASME B56.1. Please pay attention to the section in ASME B56.1 concerning the operator. In this standard, it is defined that the safe operation is the responsibility of the operator (ASME B56.1-2003, Part II, section 5.1.1). You and others can be seriously injured or even killed if you don't use this truck correctly. Before operating your truck, inspect your truck and ensure that it is in correct working order. This truck was designed and built to current industry and government standards. For more information see following:

- ASME B56.1 (American Society of Mechanical Engineers)
- OSHA §1910.178 (Occupational Safety and Health Act)
- UL 583 (Underwriters Laboratory)
- ANSI Z535.4 (American National Standards Institute)

⚠ DANGER This sign indicates hazard situations, if not avoided, will result in serious injury or death. The instructions or precautions to this message must be observed to avoid the potential risk of injury or death.

⚠ WARNING If not followed, warning indicates hazard situations which may lead to moderate injury. The instructions or precautions to this message must be observed to avoid the potential risk of injury or death.

⚠ CAUTION If not followed, caution indicated situations which may lead to minor injury. Instructions or precautions must be observed to avoid minor injury.

https://truckmanualshub.com/

b. Description warning labels (only US-market)

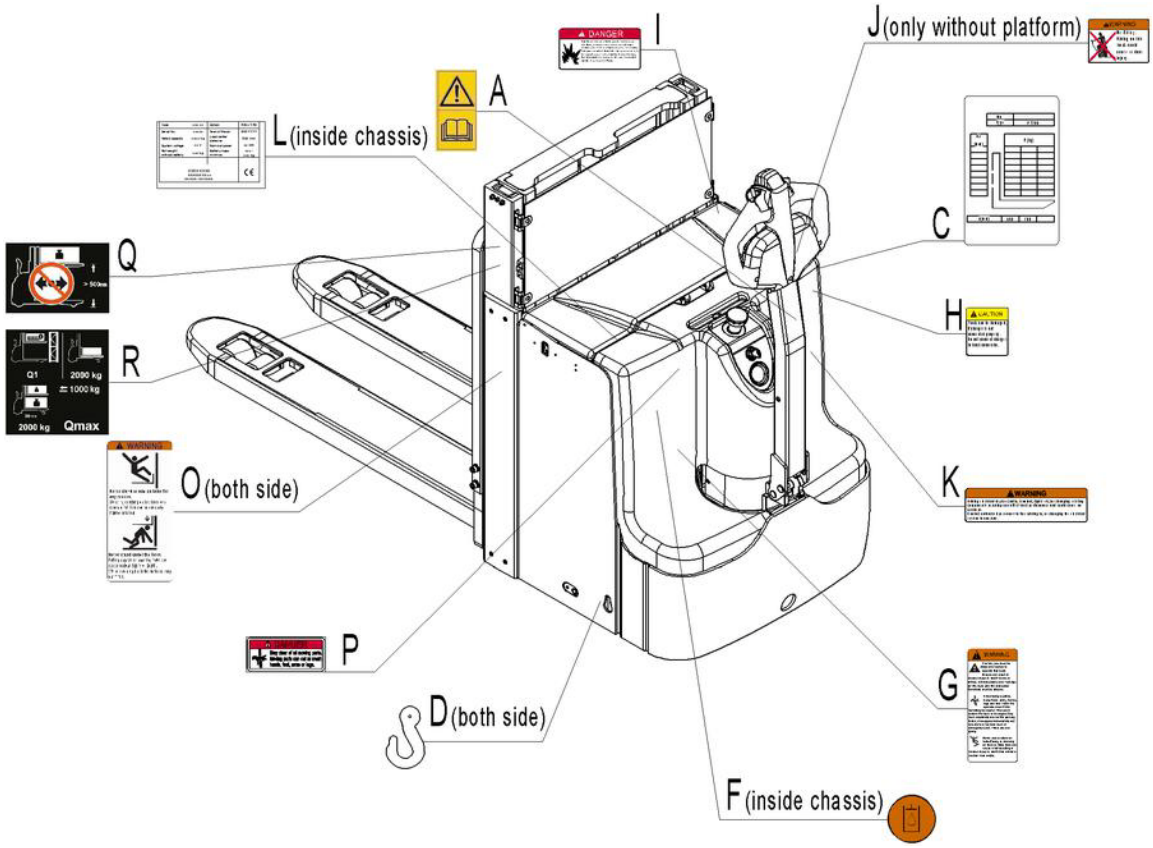

Fig. 18: Warning labels and safety devices (only USA)

A Sticker to read and follow this instruction
C Capacity sticker
D Hook mark
F Sign oil filling point
G Sign warning stay clear stop truck
H Sign caution charge
I Sign danger battery
J Sign danger not riding
K Sign warning electrical devices
L Identification plate (ID-plate)
O Sign not under, on forks
P Sign danger being crushed
Q Warning sticker
R warning sticker

The truck is equipped with an emergency button (5) which stops all lifting-, lowering-, driving- functions and engages the failsafe electromagnetic brake when it is pushed. The function is described in chapter 2. Follow the instructions given on the decals. Replace the decals if they are damaged or missing.

https://truckmanualshub.com/

Sign read and follow this instruction (A)

Sign danger not riding (J)
(only for truck without foldable platform)

Sign oil filling point (F)

Sign danger being crushed (P)

Sign warning stay clear stop truck (G)

Sign danger battery (I)

Sign warning electrical devices (K)

https://truckmanualshub.com/

Sign not under, on forks (O)

Warning sticker (Q)

Sign Caution charger(H)

Warning sticker（R）

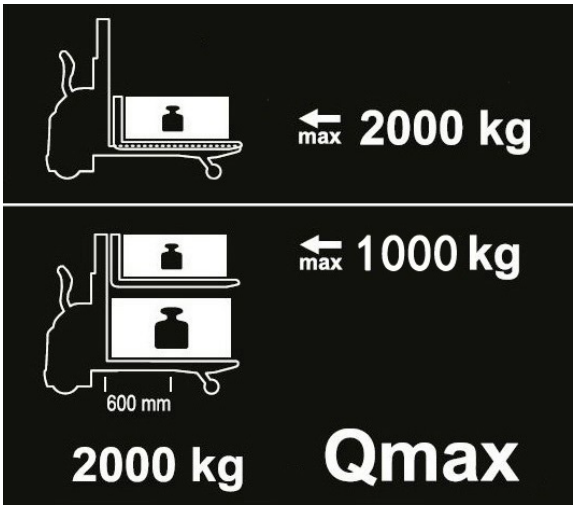

https://truckmanualshub.com/

C. Technical data for US market

Drawing see page 7

Table 6: Main technical data for standard version (US market)

Type sheet for industrial truck acc. to VDI 2198							
Distinguishing mark	1.2	Manufacturer`s type designation		PT 20I	PT20D		PT20H
	1.3	Power(battery,diesel,petrol gas,manual)		Battery			
	1.4	Operator type		Pedestrian			
	1.5	Load Capacity / rated load	Q (lbs)	4400			
		Load capacity at mast lift	Q (lbs)	2200			
		Load capacity at support arm lift	Q (lbs)	2200			
	1.6	Load centre distance	c (in)	23.6			
	1.8	Load distance, centre of drive axle to fork	x (in)	36.1			
	1.9	Wheelbase	y (in)	60.3			
Weight	2.1	Service weight (incl. battery)	lbs	1881	2178	2222	2332
	2.2	Axle loading, laden front/rear	lbs	1859/4422	1936/4642	1958/4664	2035/4697
	2.3	Axle loading, unladen front/ rear	lbs	1346/535	1426/752	1448/774	1529/803
Tires, chassis	3.1	Tires		PU			
	3.2	Tire size, front	∅xw(in)	∅9.1×2.8			
	3.3	Tire size, rear	∅xw(in)	∅3.1×2.8			
	3.4	Additional wheels (dimensions)	∅xw(in)	∅3.9×1.6			
	3.5	Wheels, number front/ rear(x=driven wheels)		1x+2/4			
	3.6	Tread, front	b_{10} (in)	20.1			
	3.7	Tread, rear	b_{11} (in)	15.0			
Dimensions	4.2	Lowered mast height	h_1 (in)	33.7	46.4	54.3	48.5
	4.4	Lift height	h_3 (in)	21.7	55.1	70.9	90.6
	4.5	Extended Max. height	h_4 (in)	61.3	99.5	115.3	136.8
	4.6	Initial lift height	h_5 (in)	4.7			
	4.9	Height of tiller in drive position min./ max.	h_{14} (in)	32.3/52.5			
	4.15	Lowered fork height	h_{13} (in)	3.5			
	4.19	Overall length	l_1 (in)	76.4			1955
	4.20	Length to face of forks	l_2 (in)	31.1			
	4.21	Overall width	b_1 (in)	28.7			
	4.22	Fork dimensions	s/e/l (in)	2.4/7.1/48			
	4.25	Distance between fork-arms	b_5 (in)	22.0/20.9			
	4.32	Ground clearance, centre of wheelbase	m_2 (in)	1.1			
	4.33	Aisle width for pallets 1000x1200 crossways	Ast (in)	80.3			84.8
	4.34	Aisle width for pallets 800x1200 lengthwise	Ast (in)	86.2			86.8
	4.35	Turning radius	Wa (in)	66.2			
Performance	5.1	Travel speed, laden/ unladen	mph	3.7/3.7			
	5.2	Lift speed, laden/ unladen	fpm	16.7/27.6			
	5.3	Lowering speed, laden/ unladen	fpm	15.7/12.8			
	5.8	Max. gradeability, laden/ unladen	%	8/20			
	5.10	Service brake		Electromagnetic			
Motors	6.1	Drive motor rating S2 60min	HP	2.3			
	6.2	Lift motor rating at S3 5%	HP	3.0			
	6.3	Battery，Britain BS standard，no		3VBS			
	6.4	Battery voltage, nominal capacity K5	V/ Ah	24/210			
	6.5	Battery weight (+/-5%)	lbs	407			

https://truckmanualshub.com/

	6.6	Energy consumption acc: to VDI cycle	kWh/h	1.0
Additional data	8.1	Type of drive control		AC-speed control
	8.4	Sound level at driver`s ear acc. to EN 12053	dB(A)	69
1) in double-deck operation: mast lift 1.0t, support arms lift 1.0t				

https://truckmanualshub.com/

12. DECLARATION OF CONFORMITY(valid, if sold within the EU)

CE-DD-002

[GB] CE Declaration of Conformity

The signatory hereby declares that the specified machine conforms to the EU Directive 2006/42/EC (Machine Directive) and 2014/30/EU (Electro-Magnetic Compatibility, EMC) including their amendments as translated into national legislation of the member countries. The signatory is individually authorized to compile the technical documents.

[D] EG-KONFORMITÄTSERKLÄRUNG

Der Unterzeichner bescheinigt hiermit, dass die im Einzelnen bezeichnete Maschine den Europäischen Richtlinien 2006/42/EG (Maschinenrichtlinie) und 2014/30/EU (Elektromagnetische Verträglichkeit - EMV) einschließlich deren Änderungen sowie dem entsprechenden Rechtserlaß zur Umsetzung der Richtlinien in nationales Recht entspricht. Der Unterzeichner ist bevollmächtigt, die technischen Unterlagen zusammenzustellen.

[E] DECLARACIóN DE CONFORMIDAD CE

El signatario certifico por medio de la presente que la máquina especificada cumple con las Normas Europeas 2006/42/CE (Normativa para maquinarias) y 2014/30/EU (Compatibilidad electromagnética), incluyendo sus respectivas odificaciones, así como con el decreto-ley para la adaptación de las normas al derecho nacional. El signatario dispone de una autorización individual que le permite compilar la documentación técnica.

[F] DECLARATION DE CONFORMITE CE

Par la présente déclaration, les soussignés certifient que le machines spécifié ci-dessus est conforme à la loi et aux directives européennes 2006/42/CE (directive sur les machines) et 2014/30/EU (compatibilité électromagnétique - CEM), y compris aux modifications qui y sont apportées et à l'arrêté autorisant sa transposition en droit national. Chaque signataire est habilité à établir individuellement la documentation technique.

[NL] EG-CONFORMITEITSVERKLARING

Ondergetekenden verklaren hierbij dat - volgens de nationale wetgeving van de Lidstaten - de hierboven vermelde opgegeven machina beantwoordt aan de bepalingen qua veiligheid bij machines (EG richtlijn 2006/42/EC) en electro-magnetische compatibilteit (EG richtlijn 2014/30/EU). Ondergetekenden zijn ieder individueel gemachtigd het technisch dossier samen te stellen.

[P] DECLARAÇÃO DE CONFORMIDADE CE

Pela presente, os signatários certificam que o máquina especificado está conforme às Directivas Europeias 2006/42/CE („Máquinas") e 2014/30/EU („Inocuidade Electromagnética - IEM"), incluindo as alterações das mesmas e o respectivo decreto-lei para a transposição em lei nacional. Cada um dos signatários está autorizado a proceder à elaboração da documentação técnica.

[I] DICHIARAZIONE DI CONFORMITÀ CE

I sottoscritti dichiarano che il veicolo per trasporti interni a macchina specificato soddisfa le Direttive Europee 2006/42/EC (Direttiva Macchine) e 2014/30/EU (Compatibilità elettromagnetica - EMV) comprese le relative modifiche, come pure il rispettivo decreto legislativo per la conversione delle direttive in diritto nazionale. I sottoscritti sono singolarmente autorizzati alla creazione della documentazione tecnica.

[BG] ЕВРОПЕЙСКА ОБЩНОСТ - ДЕКЛАРАЦИЯ ЗА СЪОТВЕТСТВИЕ

Подписаните удостоверяват с настоящето, че подробно описаното машина средство отговаря на европейския норматив 2006/42/EG (норматив за машини) и на2014/30/EU (електро-магнетична съвместимост), включително с техните промени, както и на съответния указ за прилагане на нормативите в националното право. Подписаните при това са упълномощении поотделно да съставят техническата документация.

[CZ] EG - PROHLÁŠENÍ O SHODĚ

Níže podepsaný tímto potvrzuje, že podrobný popis uvedené stroje odpovídá Evropským směrnicím 2006/42/EC (směrnice pro stroje) a 2014/30/EU (elektromagnetická interference - EMV) včetně jejich pozdějších úprav, jakož i příslušným právním výnosům pro uplatnění příslušné směrnice v rámci národního práva. Každý z podepsaných jsou jednotlivě zplnomocněni k vytvoření technických podkladů.

[DK] EF-OVERENSSTEMMELSESERKLÆRING

Undertegnede attesterer hermed, at det specificerede maskine stemmer overens med de Europæiske Direktiver 2006/42/EU (maskindirektiv) og 2014/30/EU (elektromagnetisk kompatibilitet - EMC) samt med den modsvarende lovvedtagelse til implementering af direktiver i den nationale lovgivning. De undertegnede er hver for sig beføjet til at sammenstille de tekniske dokumenter.

[EST] EL vastavusavaldus

Allakirjutanud tõendavad käesolevaga, et üksikasjaliselt kirjeldatud täpsustatud masin vastab Euroopa direktiividele 2006/42/EÜ (Direktiiv masinate kohta) ja 2014/30/EU (Elektromagnetiline sobivus - EMS) kaasa arvatud nende muudatused ja nendele vastavatele õigusmäärustele direktiivide muutmiseks siseriiklikuks õiguseks. Iga allakirjutanu üksikult on volitatud koostama tehnilist dokumentatsiooni.

[FIN] EU-YHDENMUKAISUUSSELOSTUS

Allekirjoittaneet todistavat täten, että kukin erikseen mainittu omalla voimanlähteellä varustettu tehdaskone vastaa EU-direktiivien 2006/42/EC (koneenrakennusdirektiivi) ja 2014/30/EU (sähkömagneettinen yhteensopivuus – EMC) määräyksiä sekä niiden muutoksia ja niiden kansalliseen lainsäädäntöön soveltamista koskevaa oikeussääntöä. Jokaisella allekirjoittaneista on oikeus itsenäisesti laatia asiaankuuluvia teknisiä asiakirjoja.

[GR] ΔΗΛΩΣΗ ΣΥΜΜΟΡΦΩΣΗΣ ΕΟΚ

Οι υπογράφοντες βεβαιώνουν διά της παρούσης ότι το συγκεκριμένο μηχάνημα συμμορφώνεται προς την Κοινοτική Οδηγία 2006/42/ΕΚ («Μηχανήματα») και 2014/30/ΕU (Ηλεκτρομαγνητικής Συμβατότητας, ΗΜΣ), καθώς και οι τροποποιήσεις τους, όπως μεταφράστηκε στην εθνική νομοθεσία των χωρών μελών. Οι υπογράφοντες είναι σε κάθε περίπτωση εξουσιοδοτημένοι ατομικά να καταρτίσουν τα τεχνικά έγγραφα.

[H] EU KONFORMITÁSI NYILATKOZAT

Alulírottak ezennel igazolják, hogy a részletesen leírt a megadott gép megfelel a 2006/42/EC (Gép-Irányelv) és a 2014/30/EU (Elektromágneses összeférhetőség - EMV) Európai Irányelveknek, beleértve azok módosításait, valamint az irányelvek nemzeti jogba történő átültetésére irányuló megfelelő jogi rendelkezést. Továbbá az alulírottak mindegyike rendelkezik meghatalmazással arra nézve, hogy összeállíthatja a műszaki dokumentációt.

[LT] ES atitikimo deklaracija

Žemiau pasirašę asmenys patvirtina, kad atskirai aprašytas nurodyta mašina atitinka Europos Sajungos direktyvas 2006/42/EB (Mašinų direktyva) ir 2014/30/EU (Elektromagnetinis suderinamumas – EMS) įskaitant jų pakeitimus, o taip pat ir atitinkamą teisės aktą dėl direktyvų įgyvendinimo nacionalinėje teisėje. Kiekvienas iš pasirašiusių asmenų turi teisę ruošti techninę dokumentaciją.

[LV] ES atbilstības deklarācija

Ar zemāk redzamajiem parakstiem tiek apliecināts, ka norādīts mašīna atbilst Eiropas Savienības normatīvām 2006/42/EG (Mašīnu normatīvas) un 2014/30/EU (Elektromagnētiskā atbilstība – EMV), ieskaitot to izmaiņas, kā arī atbilstošos tiesiskos rīkojumus normatīvu pielāgošanai nacionālajai likumdošanai. Parakstu īpašnieki ir atsevišķi pilnvaroti sastādīt tehniskās dokumentācijas.

[N] EU-KONFORMITETSERKLÆRING

Undertegnede bekrefter hermed at de enkelte betegnede maskin med kraftdrift tilsvarer de europeiske retningslinjene 2006/42/EC (maskinretningslinje)

https://truckmanualshub.com/

og 2014/30/EU (elektromagnetisk fordraglighet - EMV) inklusiv disses endringer og den tilsvarende rettsforordning til omsetning av nasjonal rett. Hver undertegnede er fullmektig til å sette sammen de tekniske dokumentene.

[PL] DEKLARACJA ZGODNOŚCI WE

Niżej podpisani deklarują, że poniżej opisana maszyna spełnia wymagania określone w dyrektywach Europejskich 2006/42/EC (Dyrektywa Maszynowa) i 2014/30/EU (Kompatybilności elektromagnetycznej - EMC) wraz z ich późniejszymi zmianami oraz odpowiednimi rozporządzeniami mającymi na celu przeniesienie tych dyrektyw do prawa krajów członkowskich. Sygnatariusz jest indywidualnie upoważniony do zestawiania dokumentacji technicznej.

[RO] DECLARAȚIE DE CONFORMITATE CE

Subsemnații adeveresc prin prezenta că vehiculul de specificat maşină descris individual corespunde directivelor europene 2006/42/CE (Directiva privind maşinile) şi 2014/30/EU (Compatibilitatea electromagnetică - CEM) inclusiv modificărilor lor precum şi actului legislativ corespunzător prentru transpunerea directivelor în drept național. Subsemnații sunt fiecare în parte împuterniciți să întocmească documentația tehnică.

[RUS] Декларация соответствия стандартам ЕС

Настоящим лица, подписавшие документ, удостоверяют, что машина с указанной спецификацией соответствует европейским стандартам 2006/42/EG (Транспортная директива) и 2014/30/EU (Электромагнитная совместимость - EMC), включая изменения в них, а также соответствующим национальным стандартам и нормам. Каждое по отдельности лицо, подписавшее документ, имеет полномочия для составления технической документации.

[S] EG-KONFORMITETSFÖRKLARING

Undertecknarna intygar härmed att det i detalj betecknade maskin uppfyller de Europeiska direktiven 2006/42/EG (Maskindirektiv) och 2014/30/EU (Elektromagnetisk tålighet - EMV), inklusive ändringarna i detta och den motsvarande rättsförordningen för att omsätta direktiven i nationell rätt. Undertecknarna har var för sig fullmakt att sammanställa den tekniska dokumentationen.

[SK] vyhlásenie o zhode

Dolu podpísaní týmto potvrdzujeme, že podrobný popis uvedené stroje Zodpovedá Európskym smerniciam 2006/42/EC (ernica pre stroje) a 2014/30/EU (elektromagnetická tolerancia – EMV) vrátane jeho neskorších úprav, rovnako zodpovedá aj príslušným právnym nariadeniam na uplatnenie smerníc v rámci národného práva. Každý z podpísaných je jednotlivo splnomocnený na vytvorenie technických podkladov.

[SLO] EU IZJAVA O SKLADNOSTI

Podpisani s tem potrjujemo, da posamično označeno določeno stroj vozilo odgovarja Evropski direktivi 2006/42/EC (Direktiva o strojih) in 2014/30/EU (Elektromagnetna skladnost - EMV) vključno z njihovimi spremembami ter ustrezno pravno uredbo o prevzemu smernic v nacionalno pravo. Podpisniki so vsakokrat posamezno pooblaščeni za izdajanje tehnične dokumentacije.

[TR] AB Uygunluk Açıklaması

İmza sahibi şahıslar, ayrıntıları belirtilen makine aracının, 2006/42/EC (Makine Yönergesi) ve 2014/30/EU (Elektromanyetik Uyumluluk – EMC) no'lu Avrupa Yönergelerine ve bunların değişiklik sonucu oluşan metinlerine ve yönergelerin milli hukuk hükümlerine dönüştürülmesine dair ilgili hukuk kararnamesine uygun olduğunu tasdik ederler. İmza sahibi şahıslar teknik dosyaları bir araya getirmek için münferiden vekil tayin edildi.

(1) Type/ Typ/ Tipo/ Modello/ Tyyppi/ Tipo / ΤΥΠΟΣ/ Típus/ Tip/ Тип/ Tips/ Tipas/ Tüüp:
(2) Serial No./ Serien-Nr./ N°. de série/ Serienummer/ Nº de serie/ Numero di serie/ Serienr./ Sarjanro/ αυξάνων αριθμός/ Seriové číslo/ Szériaszám/ Nr.Seryjny/ Serijska številka/ Výrobné číslo/ Серийный номер/ Seri No./ Seerianr./ Sērijas Nr./ Serijos numeris:
(3) Year of constr./ Baujahr/ Année de constr./ Bouwjaar/ Año de constr./ Anno di costruzione/ Produktionsår/ Byggeår/ Tillverkningsår/ Valmistusvuosi / Ano de fabrico / έτος κατασκευής/ Rok výroby/ Gyártási év/ Rokprodukcji / Letnik / Год изготовления / Üretim yılı / Väljalaskeaasta / Izgatavošanas gads / Gamybosmetai
(4) Manufacturer or his authorized representative in Community/ Hersteller oder in der Gemeinschaft ansässiger Vertreter/ Fabricant ou son mandataire établi dans la Communauté/ Fabrikant of zijn in de Gemeenschap gevestigde gemachtigde/ Fabricante o representante establecido en la Comunidad/ Construtor ou Representante estabelecido na Comunidade/ Costruttore oppure il suo rappresentante nella Comunità/ Fabrikant eller dennesi Fællesskabet etablerede befuldmægtigede/ Produsent eller agent innen felleskapet/ Tillverkare eller representant inom EU/ Valmistaja tai yhteisömaassa oleva edustaja / V˘robce nebo jeho zastoupení/ Gyártó / producent albo jego przedstawiciel w EG (Wspólnota Europejska)/ Καηαζθεπαζηήο ή όκηιν ηνππηθώλ αληηπξνζώπσλ/ Üretici ya da Bölgedeki Yetkili Temsilci/ Proizvajalec ali pooblaščeni zastopnik s sedežem v EU/ Výrobca alebo zástupca so stálym bydliskom v EÚ / Изготовитель или его представитель, зарегистрированный в стране Содружества/ Tootja või organisatsioonis paiknev esindaja/ Ražotājs vai vietējais uzņēmuma pārstāvis / Gamintojas arba šalyje reziduojantis atstovas:
(5) Date/ Datum/ Data/ Fecha/ datum/ Dato/ päiväys/ Kuupäev/ Datums/дата / Dátum/ dátum/ tarih/ ημερομηνία

Authorised signatory/ Im Auftrag/ pour ordre/ Incaricato/ Por orden de/ por procuração/ op last van/ på vegne af/ på uppdrag/ Etter oppdrag/ psta./ Ülesandel / pavedus / v.i. / По поручению / megbízásából /длъжностно лице / z pověření / z poverenia / po nalogu / na polecenie/ din sarcina / adına / θαη' ελληνή

(1) Type: **XX XX – Selfpropelled industrial truck**
(2) Serial No: **XXXXXXXX**
(3) Year of constr.: **YYYY**
(4) Manufacturer or his authorized representative in Community:
Company name/ Street / Postal code Town/ Country
(5) Date: **YYYY.MM.DD**
(6) Authorized signatory: **Mr. Sample**

Sample
If you can read this text, your declaration is not complete. In this case please ask for a copy