https://truckmanualshub.com/

Operation and Maintenance Manual

S 825 M

Materials Handling

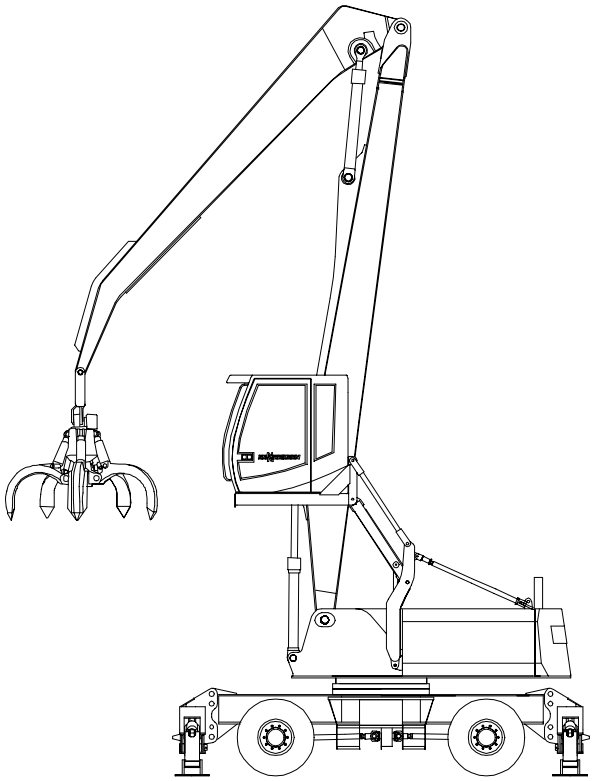

825.0.315 / 09.2002

https://truckmanualshub.com/

Target group

This manual serves to familiarize operators of a Sennebogen materials handling machine with putting into service, operation, maintenance and transport. For detailed information on the necessary previous experience and qualifications of the users/operators refer to Chapter 1 SAFETY in this manual.

Notes on the Operation Manual

Read and understand the Operation Manual, and Chapter 1 SAFETY in particular, before using and operating the machine.

Store the Operation Manual for future use and reference.

Warning!

- Do not use or operate the machine until you have read and completely understood this Operation Manual.
- Be sure to observe the load rating charts in Section 3.2.
- Refrain from any unsafe operating or maintenance practices.
- Setup, operation and maintenance of the machine is not permitted unless effected by duly instructed personnel. Qualification and training of the personnel is the responsibility of the owner/user.
- This Operation Manual must be available in the operator's cab at all times.

In some figures, the guards and protective devices specified have been omitted for sake of clarity in the illustrations. Machine operation with guards or protective devices removed is prohibited!

Danger
Before operating the machine, be sure to fit the guards or protective devices.

Currency at time of printing

State-of-the-art technology and the high quality level of our machines are being ensured by ongoing product development. This might possibly have caused changes to your machine which are not included in this Operation Manual. Also we cannot rule out the possibility of inadvertent errors. We ask for your understanding of the fact that no legal claims can be deduced from the data, illustrations and descriptions contained in this manual.

Copyright

© Straubing 2002 Sennebogen Maschinenfabrik GmbH
No part of this publication may be reproduced without the prior written permission of Sennebogen Maschinenfabrik GmbH, Straubing, Germany.
Printed in Germany.

https://truckmanualshub.com/

1 Safety 1-1
1.1 General 1-1
1.2 Use as Intended 1-3
1.3 Abuse 1-3
1.4 Safety Information 1-4
1.4.1 General 1-4
1.4.2 Transport 1-8
1.4.3 Commissioning 1-9
1.4.4 Operation 1-10
1.4.5 Maintenance 1-11
1.5 Obligations of the Owner 1-12
1.6 Protective Devices 1-15
1.7 Warning Signs and Labels on the Machine 1-16
1.8 Disposal 1-19
1.9 Hand Signals 1-19

2 General View 2-1
2.1 Overall Machine 2-1
2.2 Undercarriage 2-2
2.3 Outriggers (Option) 2-2
2.4 Upper Structure 2-3
2.5 Operator’s Station 2-5

3 Specifications 3-1
3.1 Base Machine 3-1
3.2 Load Rating 3-3
3.3 Appendix 3-5

4 Preparing to Operate 4-1
4.1 Safety Information 4-1
4.2 Initial Commissioning 4-2
4.3 Pre-Start Checks 4-2
4.4 Starting the Machine 4-4
4.4.1 Seat Belt 4-4
4.4.2 Starting the Engine 4-5
4.4.3 Stopping the Engine 4-5
4.4.4 Jump Starting 4-6
4.4.5 Warming Up the Machine to Operating Temperature 4-7

https://truckmanualshub.com/

5 Operation 5-1
5.1 Safety Information 5-1
5.2 Operator's Cab 5-2
5.2.1 Hydraulically Adjusting Operator's Cab 5-3
5.2.2 Emergency Lowering 5-6
5.3 Machine Controls 5-8
5.3.1 General View 5-8
5.3.2 Left-Hand Control Lever 5-9
5.3.3 Right-Hand Control Lever 5-10
5.3.4 Safety Lever 5-11
5.3.5 Pedals 5-12
5.3.6 Steering Column 5-12
5.3.7 Sennebogen Diagnostic System (SDS) . . . 5-13
5.3.8 Right-Hand Control Panel 5-20
5.3.9 Central Lubrication System (Option) 5-23
5.4 Heating System 5-24
5.5 Optional Equipment 5-25
5.5.1 Air Conditioner (Option) 5-25
5.6 Operating Technique 5-26
5.6.1 Safety Information 5-26
5.6.2 Boom Stop (Option) 5-27
5.6.3 Stick Limiting Stops (Option) 5-28
5.6.4 Traveling the Machine 5-31
5.6.5 Stabilizing the Machine 5-32
5.6.6 Swinging the Upper Structure 5-34
5.6.7 Lifting/Lowering Loads 5-36
5.6.8 Grab Operation 5-37
5.6.9 Generator and Magnet System (Option) . . 5-38
5.6.10 Refueling the Machine 5-41

6 Maintenance 6-1
6.1 Safety Information 6-2
6.2 General Information 6-4
6.2.1 Cleaning 6-4
6.2.2 Oils and Lubricants 6-5
6.2.3 Welding 6-6
6.3 Engine 6-7
6.3.1 Engine Oil 6-8
6.3.2 Air Filter 6-9
6.3.3 Radiator 6-11
6.3.4 Belt drives 6-12

https://truckmanualshub.com/

6.4 Hydraulic System 6-13
6.4.1 Hydraulic hose lines 6-14
6.4.2 Hydraulic System Pressure Relief 6-15
6.4.3 Checking Oil Level 6-16
6.4.4 Changing Hydraulic Oil 6-17
6.4.5 Return Flow Filter – Replacing Filter Element 6-19
6.4.6 Pilot Control Filter – Replacing Filter Element 6-20
6.4.7 Leakage Oil Filter – Replacing Filter Element 6-21
6.4.8 Replacing Breather Filter 6-22
6.4.9 Hydro Clean – Superfine-Filter-System (Option) 6-23
6.4.10 Checking Precharge Pressure of the Accumulators 6-24
6.5 Undercarriage 6-25
6.5.1 Cleaning and Lubricating 6-25
6.5.2 Tire Inflation Pressure (Machines with Pneumatic Tires) 6-25
6.5.3 Retightening Wheel Nuts 6-26
6.5.4 Hub Gears 6-26
6.5.5 Travel Gear 6-28
6.5.6 Differential 6-29
6.6 Slewing Ring 6-31
6.7 Electrical System 6-34
6.7.1 Batteries 6-34
6.7.2 Fuses 6-35
6.8 Heating System 6-36
6.9 Appendix 6-37
6.9.1 Maintenance Schedule 6-37
6.9.2 Schedule of Lubrication Points 6-40
6.9.3 Refill Capacities 6-41
6.9.4 Tightening Torques for Bolts 6-42

7 Setting up works 7-1

https://truckmanualshub.com/

8 Transport 8-1
8.1 Safety Information 8-1
8.2 Dimensions and Weights 8-2
8.2.1 Shipping Dimensions 8-2
8.2.2 Weights 8-3
8.3 Locking the Upper Structure 8-4
8.4 Lifting the Machine 8-5
8.5 Lashing and Tying Down the Machine 8-6

9 Troubleshooting 9-1
9.1 Engine 9-1
9.2 Hydraulic System 9-2
9.3 Sennebogen Diagnostic System 9-4
9.3.1 Bank of keys with LEDs 9-4
9.4 Heating System 9-6
9.5 Air Conditioner (Optional) 9-7
9.6 Undercarriage 9-8
9.7 Cab 9-8

10 Appendix 10-1
10.1 Index 10-1
10.2 Lubrication-Table 10-1
10.3 Additional Documentation 10-1
10.3.1 Engine 10-1
10.3.2 Operator’s Seat 10-1
10.3.3 Magnet system 10-1
10.3.4 Central Lubrication System 10-1
10.3.5 Cleaning the Cooler 10-1

https://truckmanualshub.com/

1 Safety

1.1 General

In the design and construction of the machine, allowance has been made for the state of the art and the recognized safety-related standards. Its operation may nevertheless involve potential hazards for persons, the machine and other property if

- the machine fails to be used as intended;
- operation or maintenance of the machine is performed by unqualified personnel;
- the safety notices and messages are ignored.

Over and above the safety information contained in this Operation Manual, national and international rules and regulations are applicable as well.

Regulations applicable in the Federal Republic of Germany include:

- “Winden, Hub- und Zuggeräte” (VBG 8) (Winches, lifting and pulling equipment)
- “Krane” (VBG 9) (Cranes)
- “Lastaufnahmeeinrichtungen im Hebezeugbetrieb” (VBG 9a) (Load take-up devices in hoisting service)
- “Erdbaumaschinen” (VBG 40) (Earthmoving machinery)
- EC Machinery Directive (89/392/EEC)
- Safety of Machinery (DIN EN 292)

Note
When a conflict exists between the national rules and regulations in the country of destination and our recommendations, follow the strictest procedure.

https://truckmanualshub.com/

Identification of Notices

Throughout this Operation Manual, safety notices and messages are used to alert you to hazardous operating practices. These safety notices and messages are identified by a safety alert symbol and a signal word.

This safety alert symbol means: *Attention* - your safety and that of other persons is involved.

The associated signal word identifies the hazard's degree of seriousness:

Danger
Used to identify a major immediate hazard. Failure to avoid this hazard will result in most serious bodily injury or in the death of persons.

Warning
Used to identify potentially hazardous situations. Failure to avoid this hazard could result in most serious bodily injury or in the death of persons.

Caution
Used to identify potentially hazardous situations. Failure to avoid this hazard could result in bodily injury or in major property damage.

Information that will make work easier for you or promote better understanding of handling of the machine is identified as follows:

Note
Used to identify notes that draw your attention to special features.

Note
Used to identify cross references to other documents.

https://truckmanualshub.com/

1.2 Use as Intended

The machine is intended to be used for the exclusive purposes of lifting, moving and loading loads.
The working attachments allowed are:

- Grabs
- Magnet systems

For specifications refer to Chapter 3 SPECIFICATIONS. Due allowance must be made for the machine performance specifications.

Any other use or any use beyond the scope set out above is considered to be improper use.

Work station:
The operator's work station is in the operator's cab of the machine.

Target group

The machine has been designed to perform specific exacting duties. Persons who operate the machine or work on it must have received adequate training or instruction.

Operation and application must be performed only by persons that have been duly instructed. Commissioning, maintenance, transport and assembly/disassembly must be assigned to trained qualified personnel.

1.3 Abuse

Practices considered to be improper use (abuse) include in particular:

- Lifting, moving and handling of persons
- Oblique pulling of loads
- Dragging of loads
- Breaking loose any loads that have got stuck
- Operation in a potentially explosive atmosphere

Warning
Improper use will exempt the manufacturer from any and all liability! The user will bear sole responsibility.

https://truckmanualshub.com/

1.4 Safety Information

The safety information contained in this Operation Manual is intended as a guide to assist qualified operators in safe operation of the machine. Sennebogen cannot foresee every situation however that may involve a potential hazard in the field.
The safety information and warnings on the machine and in this Operation Manual can therefore not be all inclusive. Safety remains the responsibility of the owner and the operators.

1.4.1 General

Danger area

The danger area of the machine is the surrounding area in which persons are within the reach of:

- Work-related movements of the machine
- Working equipment and attachments
- Loads swinging out or dropping down
- Working equipment dropping down

Danger
No persons are allowed in the danger area!

In case of danger to persons, the operator must give warning signals. If the persons fail to leave the danger area in spite of the warning, operations must be stopped.

To avoid crushing hazards, maintain an adequate safety clearance (at least 500 mm / 19.69 inch) to any fixed structures such as building structures, banks of excavations, scaffolds or other machines.
Where maintenance of the safety clearance is precluded, mark off the area between any fixed structure and the working area of the machine.
When the operator’s view of his work and travel area is restricted or impaired, a signal person must be provided.

https://truckmanualshub.com/

Personal protective equipment

While performing work on the machine, the operating personnel is obliged to wear personal protective equipment as required by the national rules and regulations (e.g., hard hat, safety shoes).

Stability

- Position the machine on a firm, level supporting surface only.
- Where necessary, stabilize the supporting surface.
- Beware of edges of excavations, banks, vaults, etc.
- Set outriggers on a firm, level supporting surface as well.
  Do not use outriggers to raise the machine off the ground. The tires must always maintain contact with the ground.
- Pay attention to wind speeds!
- Stability is lowest when the working equipment is positioned at right angles to the direction of travel.
- Stability is highest with the working equipment in a diagonal position (see illustration below).

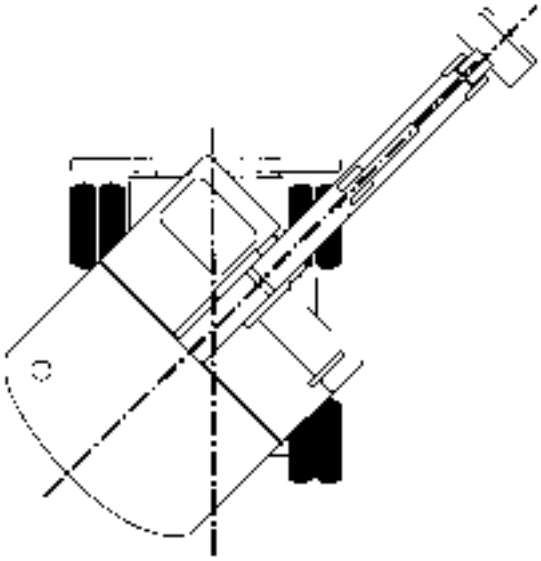

Danger
Refrain from any operating practice impairing stability of the machine!
Note that stability is reduced when the load swings out to the side.

https://truckmanualshub.com/

Working in the vicinity of power lines

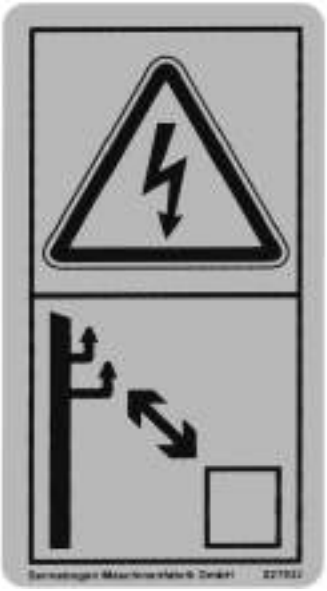

- Clearly mark off the power lines in the job site area with your supervisor. Do so before starting work!
- Consider all overhead lines to be energized electric power lines.
- Operate the machine so that neither parts of the machine nor any loads being handled enter into the danger zone.
- Maintain a safety clearance to the overhead lines. Unless otherwise provided in the national laws and regulations, maintain the following minimum clearances:

Rated voltage	Safety clearance (meter)
to 1000 V	1,00
over 1000 V to 110 kV	3,00
over 110 kV to 220 kV	4,00
over 220 kV to 380 kV	5,00
unknown	5,00

- Use a signal person to observe the safety clearance.
- The use of insulating links, cage-type guards or proximity warning devices on the machine is not a substitute for maintenance of the minimum clearances specified.
- Wind can cause both the overhead lines and any working equipment to weave or swing out and thus reduce the clearance.

High voltage contact

In case of high voltage contact, proceed as follows:

- Do not leave the operator’s station.
- Caution all outside persons against approaching or touching the machine.
- Where possible, move the working equipment or the entire machine out of the danger zone.
- Arrange for the power to be disconnected.
- Do not leave the machine until after de-energization of the line that has been touched or damaged.

Danger
If you must leave the machine in an emergency, e.g., if there is a fire, never contact the machine and the ground at the same time. Jump clear of the machine with your feet together.

Qualifications of personnel

Only those persons must be assigned to operate or maintain earthmoving machines on their own who

https://truckmanualshub.com/

Extract from VBG 40 regulations (Germany)

- have attained the age of 18 (majority);
- are both physically and mentally fit;
- have received training in the operation or maintenance of the earthmoving machine and have proven their relevant qualification to the employer; and who
- can be expected to reliably perform the duties assigned to them.

They must have been appointed by the employer to operate and maintain the earthmoving machine.

https://truckmanualshub.com/

1.4.2 Transport

Warning
Transport of the machine and of the accessories is the responsibility of the respective carrier as a general principle.

- Observe the applicable cargo securing rules and regulations.
- During loading and transport, secure the machine and its working equipment against any accidental movement.
- Remove mud, snow and ice from the undercarriage of the machine sufficiently to allow the use of ramps without the risk of slippage.
- Before loading ramps of flatbed trailers are used by crawler-type machines, provide them with wood blocking.
- Before setting off, investigate the condition of the travel route.
- For transport of the machine, use only the lashing, tie-down and lifting points provided for the purpose.

https://truckmanualshub.com/

1.4.3 Commissioning

Warning

- Make sure that all guards and protective devices of the machine are in place and are properly secured.
- Wear personal protective equipment (hard hat, safety glasses) where this is required by job conditions.
- Avoid wearing jewelry or loose clothing.
- Secure any loose items, e.g., tools or other accessories.
- Agree on hand signals with the signal person.
- Obtain information about first aid and about assistance and rescue services.
- Perform the pre-start checks as specified in Section 4.3.
- Get onto or off the machine only while it is parked. Use the means of access and ladders provided for the purpose:
  - Before using the means of access and the ladders, clean them as necessary.
  - While mounting or dismounting, your hands must be free of any objects. Use a hand line or a hoist to lift any items of equipment onto the machine.
  - Do not use controls in the operator's cab as handholds.
- Make sure that there are no persons in the danger area.
- Check the safety features (brakes, signaling and lighting equipment) of the machine.
- While traveling at slow speed, check the controls and protective devices for proper operation.

https://truckmanualshub.com/

1.4.4 Operation

Warning

- Be sure to observe Chapter 1 SAFETY.
  Before the machine is put into operation, perform the checks as specified in Section 4.3.
- Persons who operate the machine or work on it must have received adequate training or instruction.
  Operation and application must be performed only by persons that have been duly instructed.
- Exercise extreme caution when overriding the stick limiting stops.
- Make sure that there are no persons in the danger area.
- Maintain a safety clearance to overhead lines.
- Operate the machine only while you are in the operator's seat.
- Do not use the machine for handling of personnel.
- Make due allowance for ambient conditions, e.g., poor visibility, wind speeds, etc.
- Use the correct load rating chart belonging to the machine.
- Observe performance specifications.
- Check whether the load capacity of attachment points is adequate.
- Obey the signals given by signal persons, where applicable.
- For any long-distance travel, put the boom in the direction of travel.
- Before leaving the operator's cab:
  - Fully lower the cab, where applicable.
  - Park the machine on a safe surface. Back off from the edge of an excavation, where applicable.
  - Lower any attached loads to the ground.
  - Secure the working attachments.
  - Pull the safety lever backward.
  - Block the tires/undercarriage.
  - Stop the engine.
  - Lock the operator's cab; use warning lamps to mark the machine, where applicable.

https://truckmanualshub.com/

1.4.5 Maintenance

Warning

- The maintenance work described may only be carried out by trained and instructed specialist personnel.
- Wear personal protection equipment (e.g. safety helmet, ear protection, protective gloves, safety boots) where working conditions require.
- Observe the applicable statutory accident prevention and safety regulations.
- Land any attached loads, and lower the boom to ground level.
- Pull the left safety lever backwards.

- Before attempting to perform any maintenance, shut down the machine and secure it against unauthorized restarting.
- Attach a warning tag to the controls.
- Do not smoke and do not allow open flames.
- Use personnel hoists or work platforms that satisfy safety requirements.
- Stay clear of all rotating and moving parts.
- Relieve the pressure before working on the hydraulic system.
- Always wear protective gloves when handling wire ropes.
- Use only genuine Sennebogen spare parts.
- Use only those oils and lubricants that are specified in the lubricants chart.
- Do not lift heavy components by hand. Use hoists or lifting equipment.

- Actuate battery isolator switch to interrupt the power supply.
- When working near battery, cover with insulating material; do not lay tools on the battery.
- On completion of the maintenance operations, reinstall all guards and protective devices.
- Keep the operator’s cab clean and tidy.
- Perform a functional check to ensure proper operation.
- On completion of any maintenance operations, only the crane owner or his agent is permitted to clear the machine for service again.

https://truckmanualshub.com/

1.5 Obligations of the Owner

Warning
The owner/user is obliged to prepare relevant operating instructions when dealing with dangerous machines or hazardous materials.

The necessary information is to be found in

- EG directives on occupational health and safety
- National occupational health and safety laws
- Accident prevention regulations and
- the present operation manuals.

Inspection by competent person

The machine must be subjected to a thorough inspection by a competent person

- Prior to initial use, and prior to recommissioning after any material changes have been made;
- At least once a year;
- In between, depending on the severity of service and on the operational conditions.

For these purposes, a competent person is defined as one who

- by reason of technical training and
- after special instruction provided by Sennebogen

has acquired thorough knowledge of this machine and of the applicable rules and regulations and is capable of assessing the safe operating condition of the machine.

Personnel selection and qualifications

- Employ only personnel that has been duly trained or instructed.
- Define responsibilities for operation and maintenance.
- Observe the minimum age permitted by law.

Danger

- Personnel that is being trained or instructed must not be allowed to work on the machine except under constant supervision of an experienced skilled person.
- Have any work on electrical equipment of the machine performed by a qualified electrician only.
- Only qualified personnel having received relevant training is allowed to perform work on undercarriages, braking and steering systems!
- Work on hydraulic equipment must only be performed by personnel having specific knowledge and experience of hydraulics!

https://truckmanualshub.com/

Noise protection

The permanent sound pressure level of the machine – measured at the operator's seat with the operator's cab closed – is about 80 dB(A). Wearing of hearing protective devices therefore is not a mandatory requirement. Measurements are made as specified in 79/113 EEC, 84/532 EEC, and 86/662 EEC.

It is possible however that environmental influences cause the level to exceed 85 dB(A), e.g., owing to dropping or transport of material, or in combination with other machines on a job site.
In such cases, noise protection arrangements for the operating personnel are a mandatory requirement.

The owner must make sure that adequate hearing protective devices are available and are worn by the operating personnel.

Technical condition of the machine

It is the obligation of the owner to continuously monitor the overall technical condition of the machine (for defects and damage evident on the outside as well as changes in operational performance).
Keep the time limits specified for periodic inspections.

Unauthorized modification and spare parts fabrication

Any modification or alterations of the machine are not allowed.
This is equally applicable to the installation and adjustment of safety devices and valves and also to welding on bearing structures.

Genuine Sennebogen spare parts and accessories serve the safety of the personnel. The use of other components may change the properties of the machine and thus compromise safety.

The use of non-approved components will release Sennebogen from all and any liability for any resulting consequences.

Inadmissible operating practices

- Safety of operation of the machine is ensured only when it is used as intended, consistent with the specifications in Section 1.2 of this operation manual.
- The performance limits specified in Chapter 3 SPECIFICATIONS must not be exceeded.
- When the machine is exposed to risks of falling heavy objects, it must not be used unless the operator's station is protected by a canopy (FOPS structure). The canopy is available from Sennebogen as an option.
- The machine is not suited for drawing of a trailer.
  Due to the higher axle load involved, trailer operation is not permitted unless heavy-duty axles with multiple-disc brakes (option) are used.

https://truckmanualshub.com/

Employment in foreign countries

When the machine is employed abroad, take the following precautions:

- Observe the safety regulations applicable in the respective country of use.
- Make sure that the operating personnel has the necessary qualifications for the scheduled work.
- See to it that the contents of the present operation manual are read and fully understood. Where necessary, obtain a manual in the respective official language from Sennebogen.

Risks incurred by ignoring safety notices

Non-observance of the safety notices and messages is dangerous, and persons as well as the environment and the machine can be endangered as a result.

Failure to observe the safety notices and messages will invalidate any entitlement to damages.

Fire extinguisher and first aid kit (option)

Locations for installation of a fire extinguisher and a first aid kit have been provided on the machine. The owner is obliged to equip the machine accordingly. Obtain the fire extinguisher and the first aid kit from Sennebogen, if required.

https://truckmanualshub.com/

1.6 Protective Devices

Danger

- Do not remove any protective devices and covers.
- Whenever the machine is started, make sure first that all protective devices of the machine are in place and are properly secured.
- On completion of fitting or maintenance operations, properly reinstall all protective devices and covers.
- Replace any damaged protective devices by new items.

Overload warning system

The overload warning system gives an audible and a visual warning signal when the allowable capacity is exceeded. Whenever lifting equipment is used, make sure the overload warning system has been activated (see Section 5.3.8). The tipping hazard is not averted by the overload warning system!

Danger
Machine tipping hazard!
Land the load immediately! Reduce the load and diminish the radius.

https://truckmanualshub.com/

1.7 Warning Signs and Labels on the Machine

There are specific safety signs and warning symbols on the machine.

- Do not remove the safety signs and labels.
- Keep all safety signs and labels in an undamaged and readable condition.
- Use water and soap to clean the safety signs, where necessary. Do not use gasoline or solvents to clean the signs and labels.
- Replace any damaged, scratched or illegible safety sign or label by a new item.

Note
Warning signs and labels are available from Sennebogen (see spare parts catalog).

Identification plate

Tie-down point

Lifting point

https://truckmanualshub.com/

Attaching restraint belt (optional)

Read and follow the operating manual

Battery isolation switch (optional)

Read and follow maintenance instructions

Hydraulic oil

Diesel fuel

https://truckmanualshub.com/

Danger of crushing! Cab mounting

https://truckmanualshub.com/

1.8 Disposal

Caution
Be mindful of the environment!
Substances and materials used must be properly handled and disposed of, in particular

- when working on lubrication systems and equipment, and
- when handling solvents.

1.9 Hand Signals

The operator and the signal person make use of hand signals to communicate with each other when view of the work and travel area is restricted or impaired.
The signal person gives the signals necessary for safe operation.

Caution

- The signal person must have been trained in the use of the hand signals.
- While spotting, he/she must not pursue any additional activity!
- The signal person must stand outside the danger area, facing the operator!
- The signal person must be clearly visible, by wearing warning clothing, for example!

Attention

Raise streched arm with open hand.

https://truckmanualshub.com/

Stop

Stretch out both arms horizontally.

Stop! Danger!

Stretch out and blend both arms horizontally in quick succession.

Set off

Raise stretched arm with open hand and wave.

Drive slowly forward

Bend both arms and beckon with hands turned inward.

https://truckmanualshub.com/

Reverse slowly

Bend both arms and beckon back with hands turned outward.

Drive to the right

Use left thumb to point to the left.

Drive to the left

Use right thumb to point to the right.

Rotate upper structure to the right

Use left thumb to point to the left, rotate right index finger.

https://truckmanualshub.com/

Rotate upper structure to the left

Use right thumb to point to the right, rotate left index finger.

Lift attachment (load)

Point stretched right index finger in the air, move left hand up and down.

Lower attachment (load)

Point streched right index finger at the ground move left hand up and down.

Inrease radius

Point both thumbs outward.

https://truckmanualshub.com/

Reduce radius

Point both thumbs inward.

Open grab

Hold arm horizontally to the side with hand half opened.

Close grab

Hold arm horizontally to the side with hand closed.

https://truckmanualshub.com/

https://truckmanualshub.com/

2 General View

2.1 Overall Machine

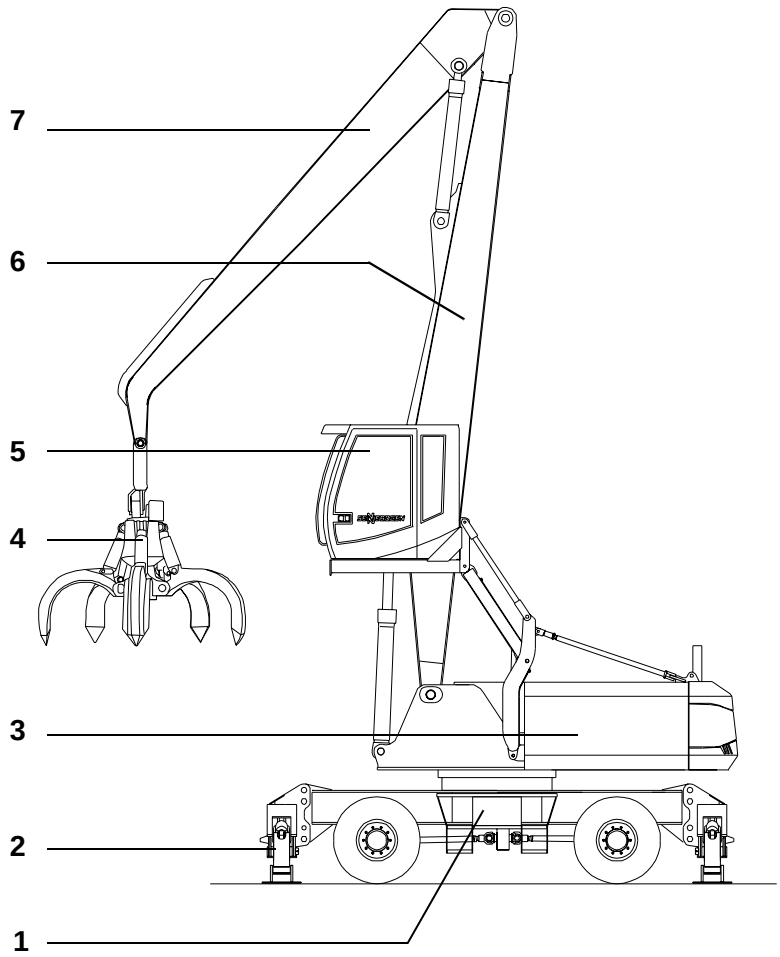

1 Undercarriage

2 Outriggers

3 Upper structure

4 Working attachments

5 Operator´s station, cab elevating

6 Compact boom

7 Grab stick

https://truckmanualshub.com/

2.2 Undercarriage

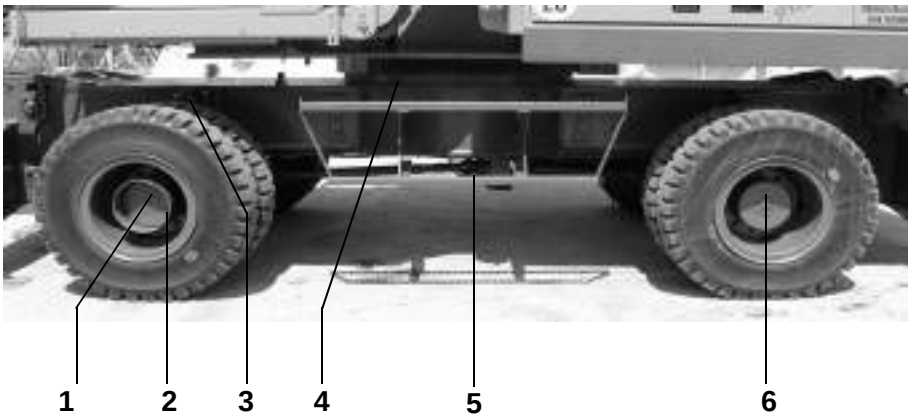

1 Front axle (oscillating axle)
2 Wheel-mounted step
3 Oscillating axle cylinder
4 Slewing ring
5 Access steps
6 Rear axle

2.3 Outriggers (Option)

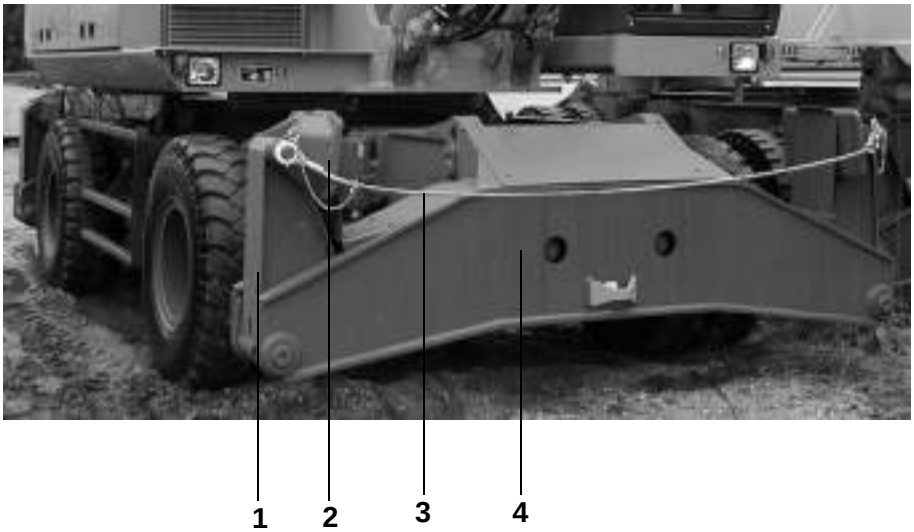

1 Outrigger support
2 Outrigger pad
3 Restraining rope
4 Outrigger box

https://truckmanualshub.com/

2.4 Upper Structure

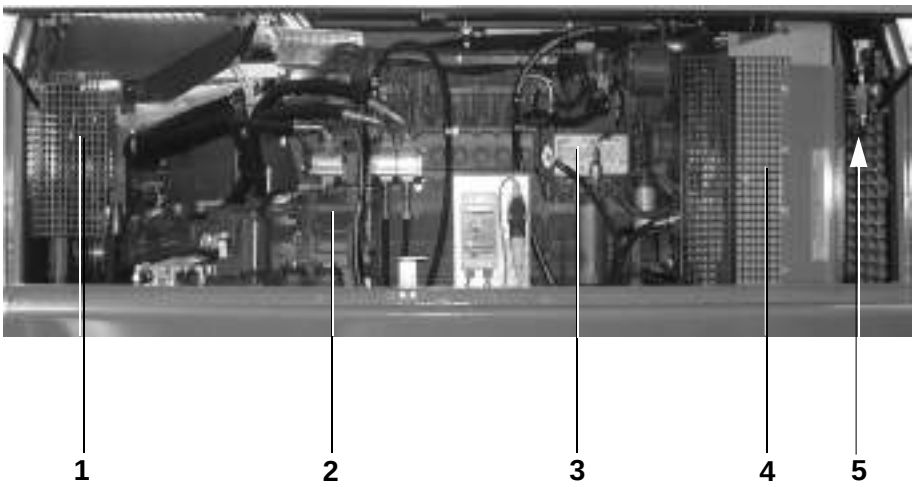

Motorraum:

1 Generator set

2 Gear

3 Engine

4 Cooler (Water/Air)

5 Overload warning system

https://truckmanualshub.com/

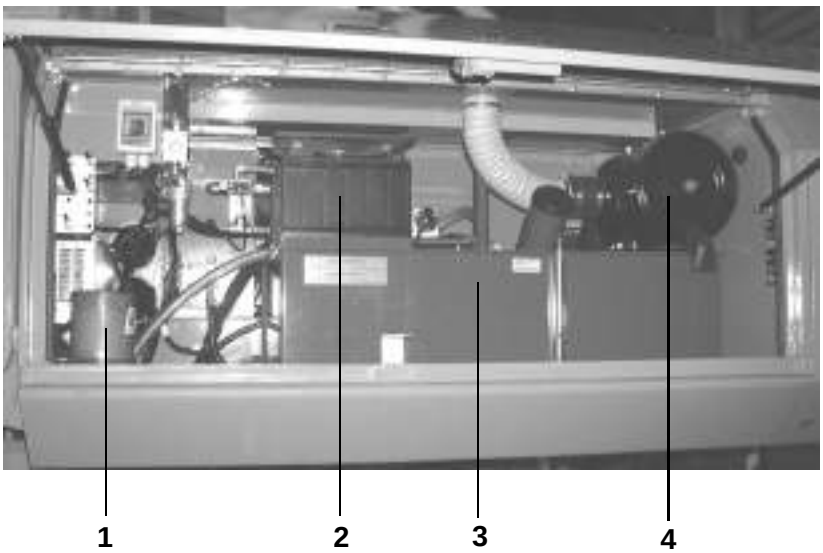

Storage Compartment:

1 Central lubrication system

2 Batteries

3 Hydraulic oil cooler

4 Air filter

https://truckmanualshub.com/

2.5 Operator's Station

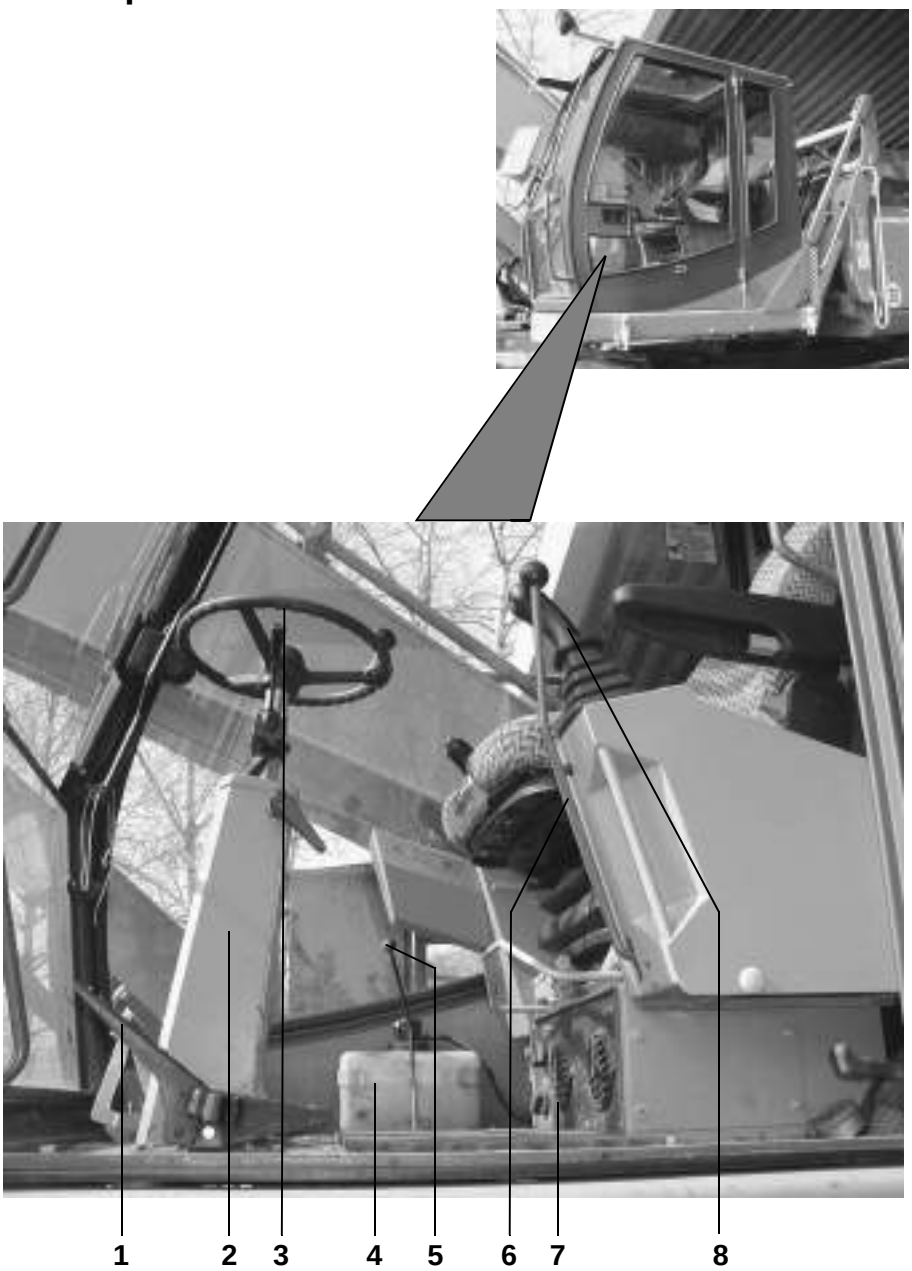

1 Pedals

2 Steering column

3 Steering wheel

4 Water reservoir, window washer

5 Lever - Cab height adjustment

6 Safety lever

7 Heater/Air conditioner (option)

8 Control lever

https://truckmanualshub.com/

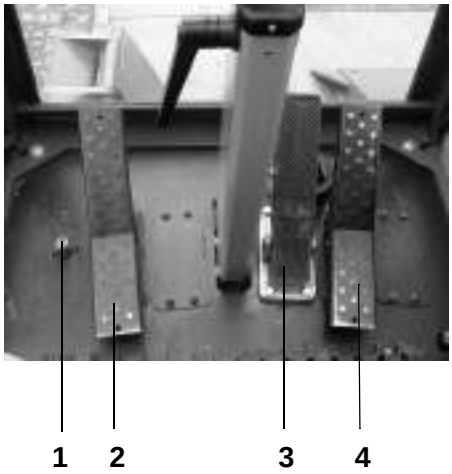

Pedals:

1 Float position (option)

2 Outriggers

3 Braking (with lock)

4 Travel

https://truckmanualshub.com/

3 Specifications

For the specifications of the base machine refer to Section 3.1. The load ratings of the machine are specified in Section 3.2.

Note
For the shipping dimensions and weights of the base machine refer to Section 8.2. Special attachment system data can be found in the operation manual of the assembly concerned.

3.1 Base Machine

Engine

	Deutz BF6M 1013 ECP Diesel Engine
Power output (acc. to ISO 9349)	122 kW (165 hp) at 2000 rpm
Displacement	7146 cm^3
Cylinders	6

Permissible inclinations of engine:

left	**right**	**front**	**rear**
30°	30°	30°	30°
For short periods (about 5 min):			
45°	45°	45°	45°

Note
At any greater inclinations, an adequate engine oil level is no longer ensured. In case higher degrees of inclination are required, consult with Sennebogen beforehand.

For further information on the engine, consult the engine manufacturer's operation manual.

Electrical system 24 volt

Travel speed

Off road	5.4 km/h (3.4 mph)
On road	20 km/h (12.43 mph)

https://truckmanualshub.com/

Hydraulic system

Max. operating pressure 350 bar (5076 psi)

Swing drive

Swing speed	0 to 8 rpm, infinitely variable

Sound pressure level

Operator's seat	72 dB(A)

Weighted vibration severity Kzeq (on the basis of statistical measurements)

Chassis	19
Operator's seat	37

Ambient temperature

-20 °C ... +50 °C (-4 °F ... +122 °F)

Maximum tolerable wind

Wind speed	
14.14 m/s (45.9 fts)	50.9 km/h (31 mph)

Note
When the wind reaches the speed specified above, stop operation of the machine immediately (land the load; lower the boom to ground level). For a schedule of wind forces and wind speeds refer to table in Section 3.3.

https://truckmanualshub.com/

3.2 Load Rating

Notes

Load ratings

- are stated in metric tons (t) and do not exceed 75% of static tipping load or 87% of hydraulic capacity, according to ISO 10567.
- are applicable with the machine on firm, level ground and apply to 360 degree operation.

The weight of the lifting accessories (hooks, slings) must be deducted from the load ratings. The figures in parentheses apply over end of undercarriage.

Load ratings with loading boom 7,4 m and grab stick 5,7 m

Höhe *height* in m	Abstütz-zustand *support position*	Ausladung in m / radius in m						
		3,0	4,5	6,0	7,5	9,0	10,5	12,0
13,5	freistehend/free on Wheels		7,6 (8,3)					
	abgestützt/on outriggers		8,3 (8,3)					
12,0	freistehend/free on Wheels			5,0 (7,0)	3,4 (4,8)			
	abgestützt/on outriggers			8,2 (8,2)	6,7 (6,7)			
10,5	freistehend/free on Wheels			5,1 (7,1)	3,5 (4,9)	2,5 (3,5)		
	abgestützt/on outriggers			8,9 (8,9)	7,0 (7,6)	5,1 (6,5)		
9,0	freistehend/free on Wheels			5,1 (7,1)	3,5 (4,9)	2,5 (3,5)	1,8 (2,7)	
	abgestützt/on outriggers			8,8 (8,8)	7,0 (7,5)	5,1 (6,6)	3,9 (5,0)	
7,5	freistehend/free on Wheels			5,0 (7,0)	3,4 (4,8)	2,4 (3,5)	1,8 (2,6)	
	abgestützt/on outriggers			9,1 (9,1)	6,9 (7,7)	5,1 (6,5)	3,9 (5,0)	
6,0	freistehend/free on Wheels		7,6 (10,9)	4,7 (6,7)	3,2 (4,6)	2,3 (3,4)	1,7 (2,6)	1,3 (2,0)
	abgestützt/on outriggers		11,0 (11,0)	9,6 (9,6)	6,7 (7,9)	4,9 (6,4)	3,8 (4,9)	3,0 (3,9)
4,5	freistehend/free on Wheels	12,1 (12,1)	6,8 (10,0)	4,3 (6,2)	3,0 (4,3)	2,2 (3,2)	1,6 (2,5)	1,2 (1,9)
	abgestützt/on outriggers	12,1 (12,1)	13,9 (13,9)	9,3 (10,4)	6,4 (8,3)	4,8 (6,2)	3,7 (4,8)	3,0 (3,9)
3,0	freistehend/free on Wheels		5,8 (8,8)	3,8 (5,7)	2,7 (4,0)	2,0 (3,0)	1,5 (2,4)	1,2 (1,9)
	abgestützt/on outriggers		14,2 (15,7)	8,7 (11,1)	6,1 (8,1)	4,6 (6,0)	3,6 (4,7)	2,9 (3,8)
1,5	freistehend/free on Wheels		4,9 (7,8)	3,3 (5,2)	2,4 (3,8)	1,9 (2,9)	1,4 (2,3)	1,1 (1,8)
	abgestützt/on outriggers		9,8 (9,8)	8,1 (11,2)	5,8 (7,8)	4,4 (5,8)	3,5 (4,6)	2,8 (3,8)
0,0	freistehend/free on Wheels		4,4 (6,7)	3,0 (4,8)	2,2 (3,5)	1,7 (2,7)	1,4 (2,2)	1,1 (1,8)
	abgestützt/on outriggers		6,7 (6,7)	7,7 (10,6)	5,5 (7,5)	4,3 (5,7)	3,4 (4,5)	2,8 (3,7)
-1,5	freistehend/free on Wheels			2,9 (4,7)	2,1 (3,4)	1,6 (2,6)	1,3 (2,1)	
	abgestützt/on outriggers			7,5 (9,1)	5,4 (7,2)	4,2 (5,6)	3,3 (4,4)	

https://truckmanualshub.com/

Adverse conditions

Load ratings must be limited or derated to make allowance for any adverse conditions. Adverse conditions include

- Soft underfoot conditions or uneven ground;
- Gradients;
- Wind;
- Side loads;
- Swinging loads;
- Jerking or sudden stopping of the load;
- Inexperience of operating personnel;
- Traveling with a load.

https://truckmanualshub.com/

3.3 Appendix

Wind force		**Wind speed**		**Description**
Beaufort number	Name	m/s (ft/s)	km/h (mph)	Onshore
0	Calm	0 - 0.2 (0 - 0.66)	1 (0.62)	Calm; smoke rises vertically
1	Light air	0.3 - 1.5 (0.94 - 4.92)	1 - 5 (0.62 - 3.11)	Direction of wind shown by drifting of smoke but not by wind vanes
2	Light breeze	1.6 - 3.3 (5.25 - 10.83)	6 - 11 (3.73 - 6.84)	Wind felt on the face; leaves rustle; ordinary vane moved by wind
3	Gentle breeze	3.4 - 5.4 (11.16 - 17.72)	12 - 19 (7.46 - 11.81)	Leaves and small twigs in constant motion; wind extends light flag
4	Moderate breeze	5.5 - 7.9 (18.05 - 25.92)	20 - 28 (12.43 - 17.40)	Raises dust and loose paper; twigs and small branches are moved
5	Fresh breeze	8.0 - 10.7 (26.25 - 35.11)	29 - 38 (18.02 - 23.61)	Small trees in leaf begin to sway; crested wavelets form on inland waters
6	Strong breeze	10.8 - 13.8 (35.43 - 45.28)	39 - 49 (24.23 - 30.45)	Large branches in motion; telegraph wires whistle; umbrellas used with difficulty
7	Moderate gale	13.9 - 17.1 (45.61 - 56.11)	50 - 61 (31.07 - 37.91)	Whole trees in motion
8	Fresh gale	17.2 - 20.7 (56.43 - 67.92)	62 - 74 (38.53 - 45.98)	Breaks twigs off trees; generally impedes progress outdoors
9	Strong gale	20.8 - 24.4 (68.24 - 80.06)	75 - 88 (46.61 - 54.68)	Slight structural damage occurs (chimney pots and slates removed)
10	Whole gale	24.5 - 28.4 (80.38 - 93.18)	89 - 102 (55.30 - 63.38)	Trees uprooted; considerable structural damage occurs
11	Storm	28.5 - 32.6 (93.51 - 106.96)	103 - 117 (64.00 - 72.70)	Widespread storm damage (very rarely experienced onshore)
12	Hurricane	32.7 - 36.9 (107.29 - 121.07)	118 - 133 (73.33 - 82.65)	Devastation occurs

https://truckmanualshub.com/

https://truckmanualshub.com/

4 Preparing to Operate

4.1 Safety Information

Warning

- Be sure to observe Chapter 1 SAFETY.
  Before the machine is put into operation, perform the checks as specified in Section 4.3.
- Make sure that all guards and protective devices of the machine are in place and are properly secured.
- Wear protective clothing (hard hat, safety glasses) where this is required by job conditions.
- Avoid wearing jewelry or loose clothing.
- Secure any loose items, e.g., tools or other accessories.
- Agree on hand signals with the signal person.
- Obtain information about first aid and about assistance and rescue services.
- Get onto or off the machine only while it is parked. Use the means of access and ladders provided for the purpose:
  - Before using the means of access and the ladders, clean them as necessary.
  - While mounting or dismounting, your hands must be free of any objects. Use a hand line or a hoist to lift any items of equipment onto the machine.
  - Do not use controls in the operator's cab as handholds.
- Make sure that there are no persons in the danger area.
- Check the safety features (brakes, signaling and lighting equipment) of the machine.
- While traveling at slow speed, check the controls and protective devices for proper operation.

https://truckmanualshub.com/

4.2 Initial Commissioning

Initial commissioning of the machine is performed by Sennebogen or by a trained and duly authorized skilled person.

Where the machine has been idle for any length of time (> 6 months), you should contact the Sennebogen service department before putting it back in service.

Warning
Be sure to observe Chapter 1 SAFETY.
Before the machine is put into operation, perform the checks as specified in Section 4.3.

4.3 Pre-Start Checks

Safety information

Note the safety information before you start work.

Danger

- Familiarize yourself with the machine and with its equipment. To that end, study this Operation Manual, and Chapter 1 SAFETY in particular, before putting the machine into operation.
- Perform only operations for which you have been trained and which are within the scope of your duties.

Checklist

1	Are all guards, protective covers and safety signs and labels in place on the machine and undamaged?
2	Has the machine been cleaned to the point where dirt fails to constitute a potential hazard (risk of slippage or falling off; poor visibility)?
3	Have the windows been cleaned and been cleared of ice and snow?
4	Is stability of the machine ensured?
5	Is the traveling gear undamaged?
6	Has the correct counterweight (ballast) been fitted?
7	Are the boom components undamaged?
8	Have the stick limiting stops been properly adjusted?
9	Has the boom stop been properly adjusted?
10	Has any maintenance required been performed as specified in the maintenance schedule?

https://truckmanualshub.com/

11	Are the oil reservoirs filled to the proper levels (hydraulic system, engine)?
12	Is the fuel tank of the machine filled to the proper level?
13	Are the V-belts undamaged and of proper tension?
14	Are all bolted/screwed connections undamaged and properly tightened?
15	Are all fasteners on the elevating cab undamaged and property tightened?
16	Are the operating and ambient conditions known?
17	Is the weight of the load known?
18	Is an experienced signal person available if and when required?
19	Are the loads to be attached within the ratings of the machine and of the sling devices? Be sure to observe Chapter 3 SPECIFICATIONS!
20	Have any danger points at the job site been identified and marked off (overhead lines, excavations, etc.)?
21	Are the doors for maintenance at the upper structure closed?
22	Is the danger area clear of personnel?
23	Are all safety devices working properly (brakes, signaling and lighting equipment)?
24	Has the overload warning system been activated?
25	Has the machine been properly leveled?

Danger
Report all irregularities to the person responsible before you place the machine in service. Do not put the machine into operation until after all deficiencies have been corrected.

https://truckmanualshub.com/

4.4 Starting the Machine

Safety information

Note the safety information before you start the machine.

Danger

- Keep service access doors closed.
- Before starting the engine, make sure that there are no persons in the danger area.
- The exhaust gases of diesel engines are harmful to health. Operate the engine only in the open or in well ventilated areas.
- Do not start the machine if there is a warning tag attached to the controls.
- Adjust the operator's seat and the mirror(s) to the proper positions.
- Fasten the seat belt correctly and securely.

4.4.1 Seat Belt

The machine has been provided with a lap belt.

Warning

- Before placing the machine in service, check the belt for signs of wear. If the belt is damaged, immediately replace the belt.
- If the belt is dirty, use water to clean the belt.
- The belt must not be twisted.
- The belt must fit low across the operator's hips, not over his stomach.
- Replace the belt after it has been in service for three years.

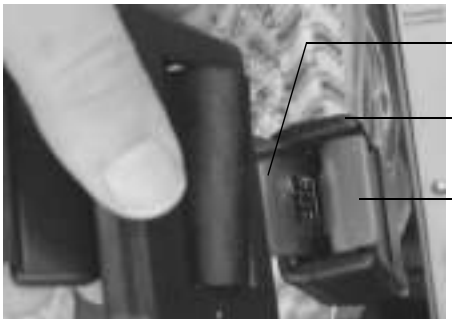

1	Slide the metal catch (1) into the belt buckle (2). An audible clicking noise indicates that the belt is locked.
2	To release the belt, push in the red button (3) on the belt buckle (2).

https://truckmanualshub.com/

4.4.2 Starting the Engine

1	Perform the checks as specified in Section 4.3.
2	Insert the key into the starter lock and turn it to position “1”. – The *Swing brake* indicator light comes on.
3	Turn the ignition key clockwise in order to start the engine. – The *Preheating* indicator light goes off. – The indicator light of the travel speed selected comes on (*Fast travel* / *Slow travel*).
4	Use the rotary knob to adjust engine rpm to the desired speed.

4.4.3 Stopping the Engine

1	Park the machine on a safe surface.
2	Lower any attached loads and the boom, where applicable, to the ground.
3	Reduce engine speed to avoid the turbocharger getting damaged.
4	Turn the ignition key to position “0” and remove the key.
5	Where applicable, pull the safety lever backwards.
6	Mark the machine (lights, flares, warning triangle, etc.).

https://truckmanualshub.com/

4.4.4 Jump Starting

The machine has a 24-volt starting system. Take care to ensure that the external power source has the same voltage.

Caution
Using a power source that has a higher voltage could result in serious damage to the electrical system of the machine.

1	Operate the optional battery disconnect switch, if equipped, to interrupt power supply.
2	Remove the battery cover as required.
3	Use appropriate jump start cables to connect the positive poles (+) of the power sources.
4	Use appropriate jump start cables to connect the negative poles (–) of the power sources.
5	Operate the optional battery disconnect switch, if equipped.
6	Start engine as specified in Section 4.4.2.
7	After the engine starts: – Disconnect the jump start cables of the negative poles (–). – Disconnect the jump start cables of the positive poles (+).
8	Refit the battery cover where applicable.

Warning
When working in the vicinity of batteries, it is prohibited

- to use open flames;
- to cause sparks; and
- to smoke.

When working on the electrical system, take care to observe the applicable standards and the accident prevention regulations.

https://truckmanualshub.com/

4.4.5 Warming Up the Machine to Operating Temperature

You can warm up the machine to operating temperature by operating the engine at low idle.

Recommended warm-up times

Outside temperature	Warm-up period
to 0 °C (32 °F)	approx. 15 min
0 °C ... -20 °C (32 °F ... -4 °F)	approx. 30 min

Note
Before you attempt to operate the machine, the display should show the following temperature values:

- Water: 35°C (95 °F)
- Hydraulic oil: 25°C (77 °F)

If the reactions of the hydraulic system are still sluggish after the warm-up period, warming up should be extended by another 15-minute period.

https://truckmanualshub.com/

https://truckmanualshub.com/

5 Operation

5.1 Safety Information

Danger

- Be sure to observe Chapter 1 SAFETY.
  Before the machine is put into operation, perform the checks as specified in Section 4.3.
- Persons who operate the machine or work on it must have received adequate training or instruction.
  Operation and application must be performed only by persons that have been duly instructed.
- Exercise extreme caution when overriding stick limiting stops.
- Make sure that there are no persons in the danger area.
- Maintain a safety clearance to overhead lines.
- Operate the machine only while you are in the operator's seat.
- Do not use the machine for handling of personnel.
- Make due allowance for ambient conditions, e.g., poor visibility, wind speeds, etc.
- Use the correct load rating chart belonging to the machine.
- Observe performance specifications.
- Check whether the load capacity of attachment points is adequate.
- Obey the signals given by signal persons, where applicable.
- For any long-distance travel, put the boom in the direction of travel.
- Before leaving the operator's cab:
  - Fully lower the cab, where applicable.
  - Park the machine on a safe surface. Back off from the edge of an excavation, where applicable.
  - Lower any attached loads to the ground.
  - Secure the working attachments.
  - Pull the safety lever backward.
  - Block the tires/undercarriage.
  - Stop the engine.
  - Lock the operator's cab; use warning lamps to mark the machine, where applicable.

https://truckmanualshub.com/

5.2 Operator's Cab

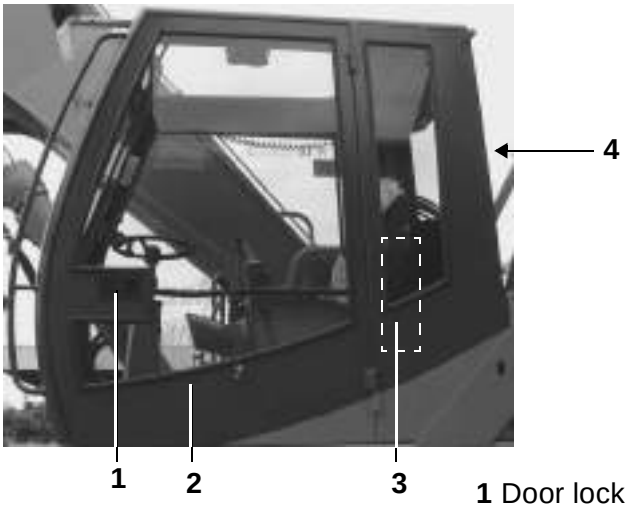

1 Door lock

2 Cab door

3 Release - Door locking device

4 Emergency exit - Rear window

The comfortable operator's cab offers you a convenient and safe work environment. You may adjust some of the features to suit your individual requirements.

Emergency exit

5 Hammer - Emergency exit

In case of emergency, you can exit through the rear window. Damage the window with the hammer (5).

Cab door

While in the fully open position, the cab door can be locked in place at the side wall of the cab. Pressing the release device (3) inside the cab allows the door to be unlocked again.

https://truckmanualshub.com/

Front window

Opening the front window: Tilt it inwards or push it upwards. Make sure that the window wiper is supported on the bracket. Press the two vertical handles inwards and move the window accordingly. Take care to ensure that the window latches home in the desired position. Press the two vertical handles outwards again.

Interior lighting

A courtesy light is fitted in the operator's cab.
You can turn the light on and turn it off again by rotating the lamp glass.

Window washer

For control of the window wipers, use is made of the switches on the right-hand control panel. The reservoir for the window washer fluid is located at the floor of the operator's cab. Have the reservoir filled with antifreeze at all times.

Operator's seat

Information on handling of the operator's seat is provided in a separate instruction. The instruction can be found in Section 10.3.

5.2.1 Hydraulically Adjusting Operator's Cab

You can adjust the height of the operator's cab in an infinitely variable manner.

Danger
An elevated cab involves risk of accidents!
Check the cab support, bolts and screwed connections every day!

- Do not travel the machine unless the cab is in the bottom position and the slewing gear brake is applied.
- Keep the cab door closed.
- Do not leave the cab.
- Do not step on the grate beside the cab.

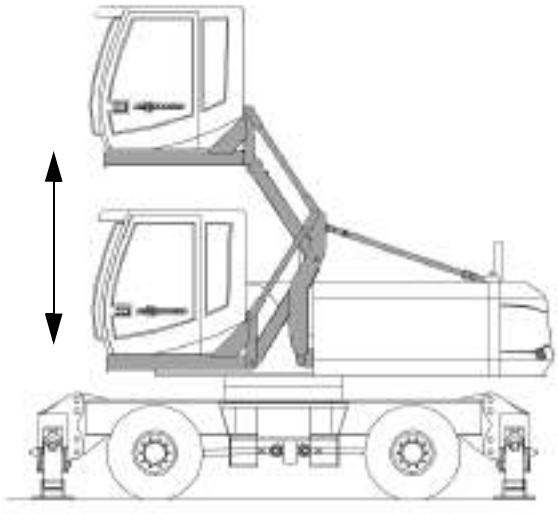

https://truckmanualshub.com/

1 Lever - Cab height adjustment

2 Information label

Elevating the cab

1	Close cab door.
2	Fasten seat belt as specified in Section 4.4.1.
3	Start engine as specified in Section 4.4.2.
4	Use speed adjustment rotary knob on right-hand control panel to increase engine speed.
5	Pull lever for height adjustment of operator's cab (1) backwards (towards operator's seat). The cab will rise slowly.

Danger
An elevated cab involves risk of accidents!

- Do not travel the machine unless the cab is in the bottom position and the slewing gear brake is applied.
- Keep the cab door closed.
- Do not leave the cab.
- Do not step on the grate beside the cab.

Note
Do not raise the cab right up to its upper end position (TDC).
Stop the cab with about 10 cm to go to the upper end position.
This serves to ensure optimum damping conditions and to create favorable working conditions in the cab.

https://truckmanualshub.com/

Lowering the cab

1	Start engine as specified in Section 4.4.2.
2	Use speed adjustment rotary knob on right-hand control panel to increase engine speed.

Danger
Shearing and crushing could result in injury or death!
Take care to ensure that the danger area is clear of personnel while the cab is being lowered.
During lowering, the danger area is defined to be the area

- at/underneath the cab;
- at/underneath the mechanical cab suspension.

3	Push lever for height adjustment of operator's cab (1) forward (towards windshield). The cab will lower slowly.

Warning
Uncontrolled rising of the cab can cause personal injury!
Keep the lever (1) actuated for about another 5 s after the lower end position has been reached. This serves to dissipate pressure in the integrated accumulator.

Otherwise any uncontrolled movements of the cab during pressure relief of the accumulator could cause personal injury.

Dismantling/mounting the cab

Danger
It could be result in injury or death when the cab is falling down!

- Dismantling/mounting the cab must only be performed by qualified personnel that has received adequate training and instruction.
- Renew all bolted/screwed connections at the cab support and cab frame-support.
- Use only genuine Sennebogen spare parts.

https://truckmanualshub.com/

5.2.2 Emergency Lowering

The machine has been fitted with the following emergency lowering systems:

- Cab emergency lowering system (cab-mounted)
  Location: to the right of operator's seat/heater.
  Required in the event of the drive system failing, for example.
- Cab emergency lowering system (storage compartment mounted)
  Location: left storage compartment, at cab rear wall.
  Required in the event of the operator getting into an emergency due to ill health.
- Boom emergency lowering system
  Location: front of engine compartment.
  Required in the event of the drive system failing, for example.

Danger
Shearing and crushing could result in injury or death!
Take care to ensure that the danger area is clear of personnel while the cab is being lowered. During lowering, the danger area is defined to be the area

- at/underneath the cab;
- at/underneath the mechanical cab suspension.

Cab emergency lowering system

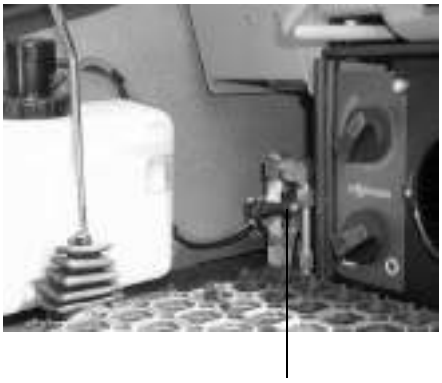

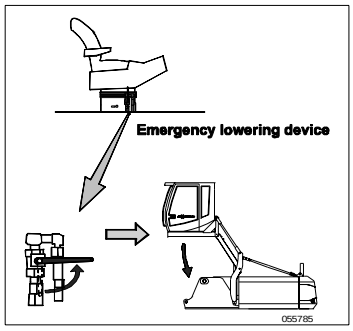

Shown here = Lower cab

1	Turn lever (1) (into horizontal position). The cab will lower slowly.
2	After the lower end position has been reached, restore lever (1) to its initial position.

https://truckmanualshub.com/

Cab emergency lowering system (storage compartment mounted)

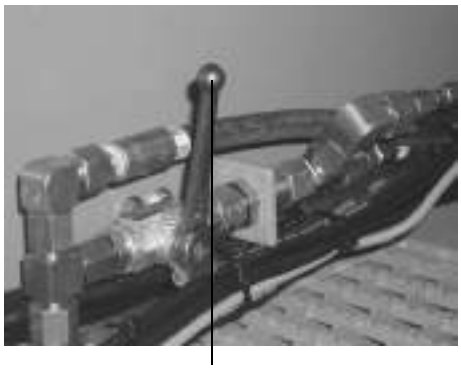

1

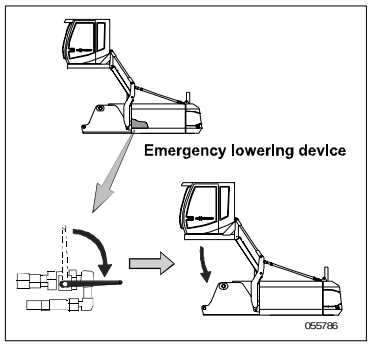

Shown here = Cab raised

1	Turn lever (1) (into horizontal position). The cab will lower slowly.
2	After the lower end position has been reached, restore lever (1) to its initial position.

Boom emergency lowering system

1

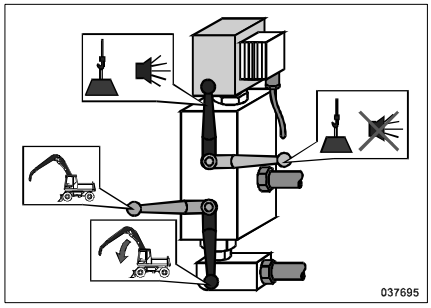

Shown here = Boom raised

Danger
Make sure that there are no persons in the danger area of the compact boom.

1	Move emergency lowering lever (1) down into the vertical position. The compact boom will move downward.
2	Restore emergency lowering lever (1) to its initial position.

https://truckmanualshub.com/

5.3 Machine Controls

5.3.1 General View

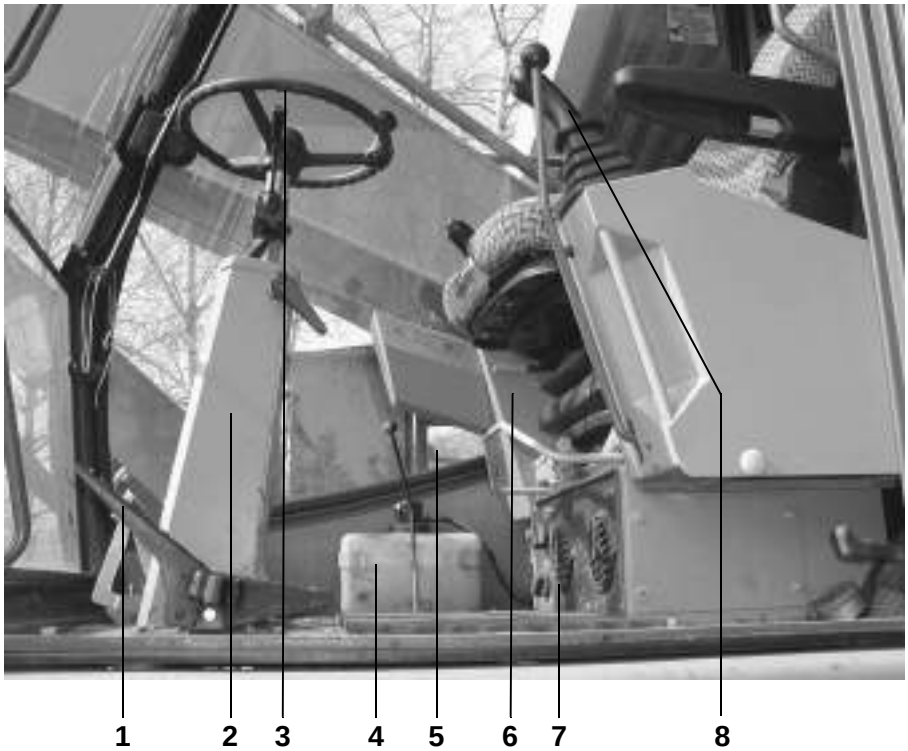

1 Pedals

2 Steering column

3 Steering wheel

4 Water reservoir - window washer

5 Lever - Cab height adjustment

3 Safety lever

4 Heating/Air condition(Option)

5 Control lever

Danger
Incorrect operation involves risk of accidents!
When the boom is over the rear axle, the operational movements of the machine are in the reverse way. Exercise extreme caution when you choose to work or travel with the boom over the rear axle.

https://truckmanualshub.com/

5.3.2 Left-Hand Control Lever

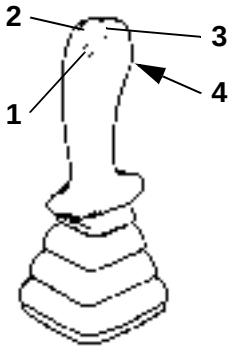

Push buttons:

1 Option

2 Option

3 Option

4 Rotate grab counterclockwise

Directions of movement:

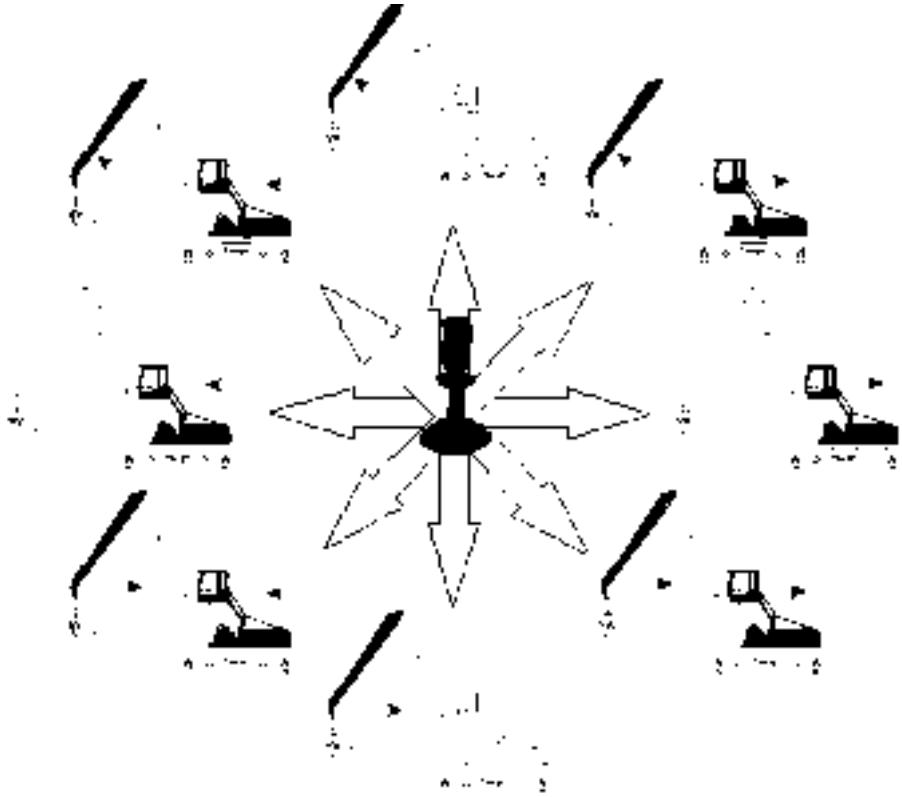

https://truckmanualshub.com/

5.3.3 Right-Hand Control Lever

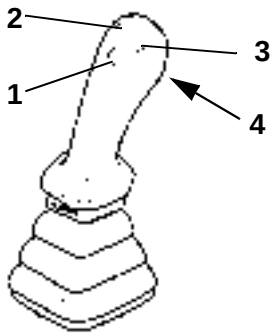

Push buttons:

1 Magnet On/Off

2 Horn

3 Override - stick limiting stops

4 Rotate grab clockwise

Directions of movement:

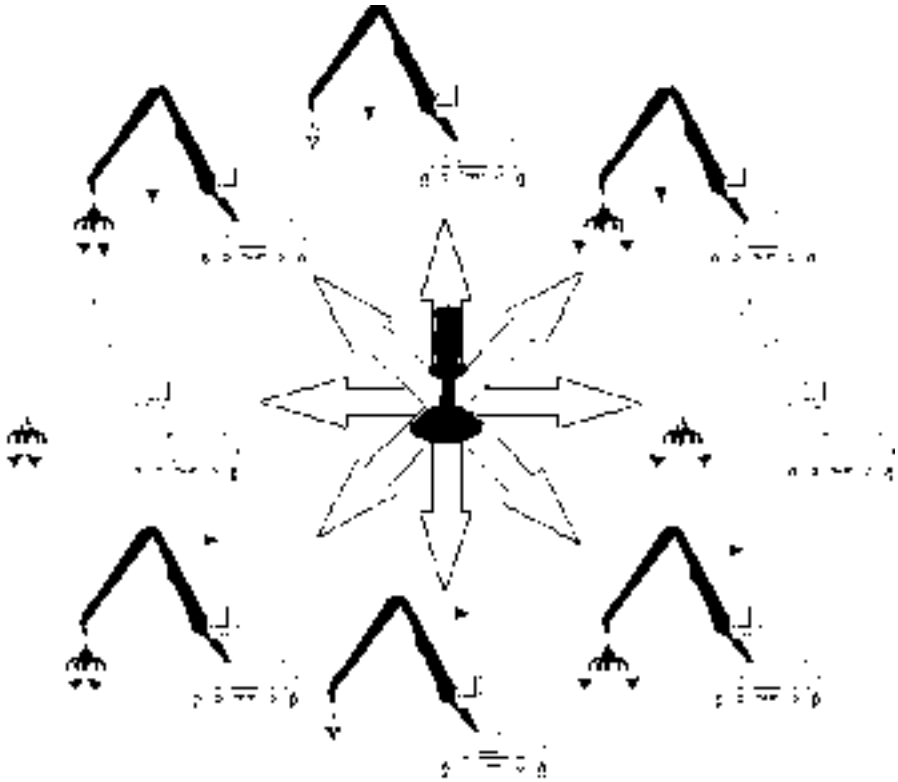

Danger
Overriding stick limiting stops could result in injury or death!
Attachments and parts of the load can hit and penetrate the operator's cab. Exercise extreme caution when operating in this mode.
Keep your eyes on the attachments and the load. Engagement in this practice is solely the personal responsibility of the operator.
Notice also the information provided in Chapter 5.6.3.

https://truckmanualshub.com/

5.3.4 Safety Lever

The safety lever (1) serves as a protective device.

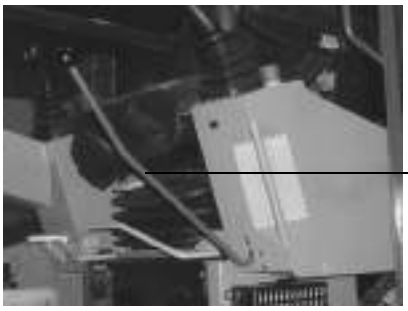

Shown here = Safety lever released (pushed forward)

When the safety lever is released (see illustration above),

- All hydraulic functions are available;
- All work movements can be performed;
- The slewing gear brake must be released separately.

Note
When the safety lever has been released (pushed forward), the slewing gear brake continues to be engaged. Use the left-hand control lever to release the slewing gear brake (see Section 5.3.2).

Shown here = Safety lever applied (pulled backward)

When the safety lever is applied,

- All hydraulic functions are disabled;
- The machine can be traveled.

https://truckmanualshub.com/

5.3.5 Pedals

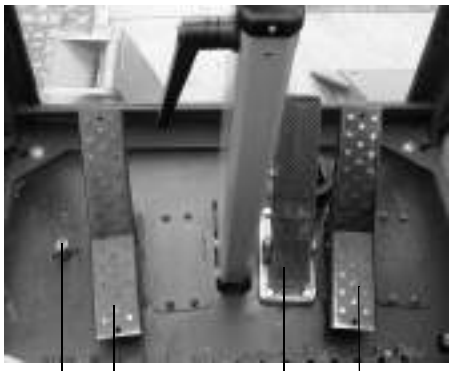

1 Float position (option)

2 Outriggers/Dozer blade

3 Braking (with lock)

4 Travel

5.3.6 Steering Column

1 Steering column lever

2 Clamping lever - Steering column

3 Steering column

4 Steering wheel

https://truckmanualshub.com/

5.3.7 Sennebogen Diagnostic System (SDS)

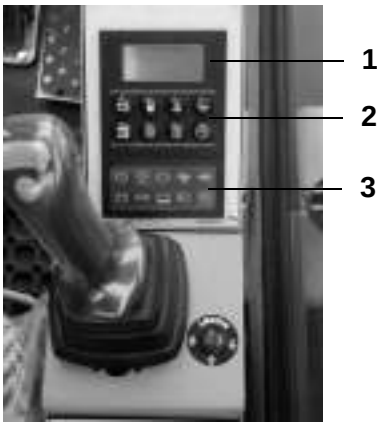

1 Display

2 Bank of keys with LEDs

3 Indicator and warning lights

The SDS offers a means of retrieving additional information, e.g., current hydraulic oil temperature.

Note
Do not clean the Sennebogen diagnostic system with fluids containing alcohol or solvents! These may cause the plastic surface to become brittle.

Note
All temperature readings are in degrees Celsius (°C).

Sensors on the machine serve to continuously monitor the operating condition, and the measurement results are transmitted to the SDS. The measurement results are analyzed in the SDS, and pressing a key causes them to be shown on the display. In the event of irregularities occurring on the machine, the indicator and warning lights will be activated.

Self-test:
Once the ignition is turned on, the SDS system performs a self-test. All segments of the display are activated; all LEDs come on. The sensors are checked. After that the SDS system is ready for operation.

Any fault detected by the SDS will be indicated on the display and by the LED. Have any faults corrected by the Sennebogen customer service.

Display (1)

The two-line display serves to indicate additional information, e.g., the time of day. Press a function key in the bank of keys (2) to retrieve the corresponding information and have it shown on the display.

https://truckmanualshub.com/

Bank of keys with LEDs

The bank of keys is fitted with 8 function keys. You can use these keys to retrieve information and have it shown on the display. Each key has a red light-emitting diode (LED) assigned to it.

The LED will come on when the associated key is pressed. The LED will also be illuminated when an irregularity has been detected by the diagnostic system. This is the case, for example, when the allowable engine temperature is exceeded. A buzzer will sound to alert you to the fault. You can acknowledge the fault alarm by pressing the respective key.

Any faults are logged and stored in the SDS; this allows service personnel to track down the causes and take fast corrective action.

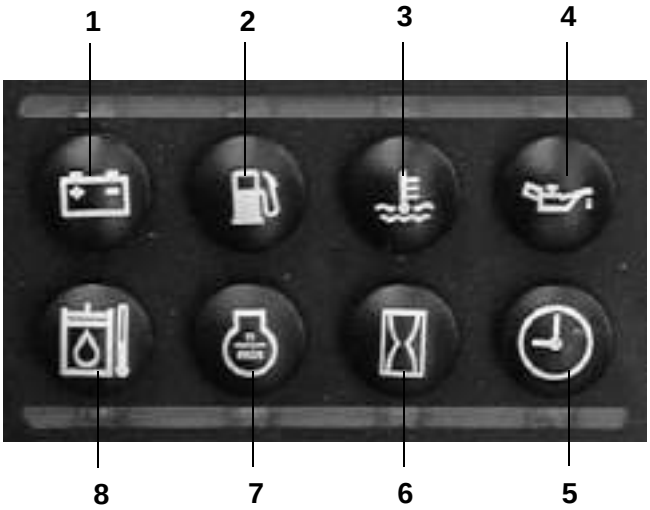

1 Battery charging
2 Fuel level
3 Coolant temperature
4 Oil pressure - Engine
5 Time of day
6 Service hour meter
7 Speed indication - Engine
8 Hydraulic oil temperature

Note
Temperatures below 20°C (hydraulic oil) or below 30°C (coolant) respectively will not be shown.

https://truckmanualshub.com/

Adjusting time of day:

1	Press keys (6) and (7) at the bank of keys simultaneously for 5 seconds. The time of day as set will flash on the display, e.g., 16:52.
2	To adjust the time of day, press the keys as follows: (8) = Hour indication - Tens place (**1**6:52) (7) = Hour indication - Units place (1**6**:52) (6) = Minute indication - Tens place (16:**5**2) (5) = Minute indication - Units place (16:5**2**).
3	To accept the time setting, press keys (6) and (7) simultaneously until the display stops flashing.

Resetting daily service hour meter:

1	Press key (6). The service hour meter function is showing on the display.
2	Press key (6) for about 3s. This serves to reset service hours to zero.

Note
The service hour meter on the right-hand control panel shows the overall service hours of the machine. This meter cannot be reset.

https://truckmanualshub.com/

Fault signaling

LED flashes, buzzer sounds

Cause	Remedy
Hydraulic oil temperature excessive (>84 °C)	– Operate engine at no load until the hydraulic oil has cooled down.
Cooling fins on the hydraulic oil cooler dirty	– Clean cooling fins on the oil cooler.
Hydraulic oil level too low	– Check oil level as specified in Section 6.4.3. – Add hydraulic oil as necessary.

Note
When the hydraulic oil temperature rises to more than +94 °C, the temperature reading on the display flashes in addition.

LED flashes, continuous alarm sounds

Cause	Remedy
Fuel level in the tank too low	– Refuel the machine as specified in Section 5.6.10.

LED flashes, buzzer sounds

Cause	Remedy
Engine overheated	– Idle the engine.
Cooling fins on the engine oil cooler dirty	– Clean cooling fins on the oil cooler.
Fan drive loose or defective	– Tighten fan drive, replace if necessary.
Coolant level too low	– Add coolant as specified in Section 6.3.3.

Note
If the coolant temperature continues to rise, the temperature reading on the display flashes in addition, and a continuous alarm sounds.

https://truckmanualshub.com/

LED flashes, buzzer sounds	Cause	Remedy
	Engine oil pressure too low (<1.3 bar)	– Stop the engine immediately. – Check the engine oil level as specified in Section 6.3.1. – Add engine oil as necessary. – If fault continues to occur, inform the Sennebogen service department accordingly.

Note
When the oil pressure falls below 1.0 bar, the pressure reading on the display flashes in addition, and a continuous alarm sounds.

https://truckmanualshub.com/

Indicator and warning lights

Indicator and warning lights come on whenever immediate action has to be taken on the machine, e.g., *Clean air filter*.

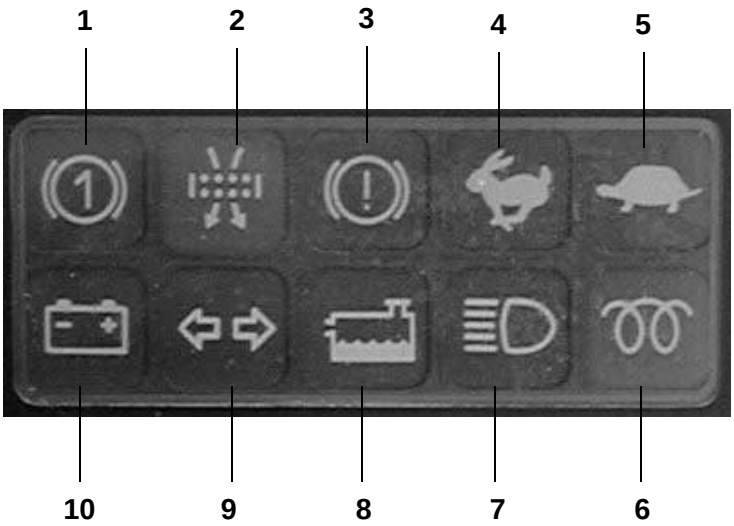

1 Slewing gear brake

2 Air filter service indicator

3 Parking brake accumulator charge pressure

4 Fast travel speed - On road

5 Slow travel speed - Off road

6 Preheating

7 High beam headlights

8 Coolant level

9 Turn signals

10 Battery charging

When the “Coolant level” warning light comes on, the engine will be shut down automatically.

Warning
In case of emergency, you can override this shutdown function.
This will allow you to start the engine and to move the machine out of the danger area.

- Remove the fuses F2 and F28 in the fuse distribution box.
  The functions of the SDS system are disabled.
  No warning will be given in the event of faults occurring!
- Move the machine out of the danger area.
- Re-install the two fuses F2 and F28.
- Eliminate the cause of the fault immediately.

https://truckmanualshub.com/

Fault signaling

comes on, warning signal sounds

Cause	Remedy
Air filter foul/blocked	– Clean filter as specified in Section 6.3.2. – Where necessary, replace filter element.

comes on during engine operation

Cause	Remedy
Accumulator charge pressure too low	– Have hydraulic system checked by a hydraulics specialist.

comes on, warning signal sounds

Cause	Remedy
Coolant level too low	– Add coolant.

comes on during engine operation, warning signal sounds

Cause	Remedy
Battery charge inadequate	– Check state of charge; where necessary, recharge or replace batteries. – Check battery connections; tighten terminals as necessary.

https://truckmanualshub.com/

5.3.8 Right-Hand Control Panel

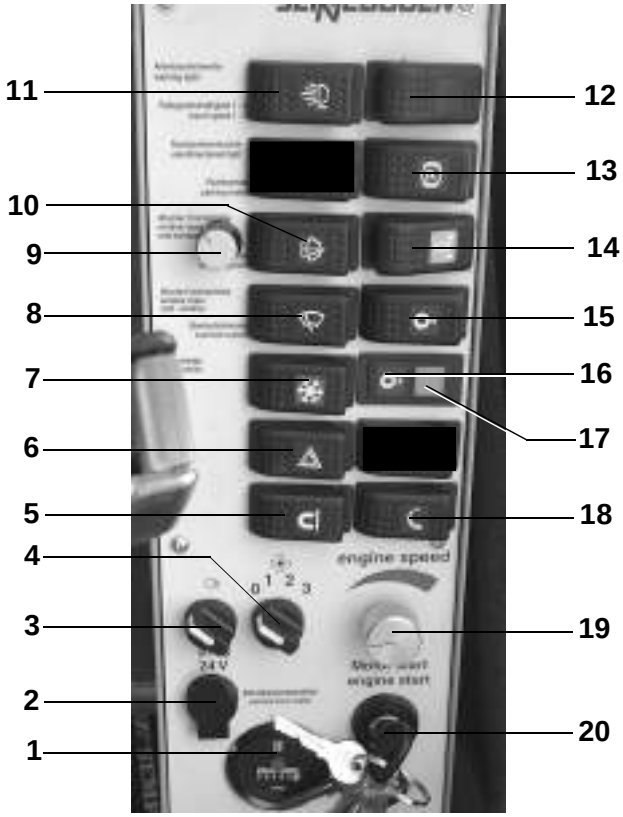

1 Service hour meter

2 24 volt power receptacle

3 Lighting switch

4 Blower fan

5 Magnet system

6 Hazard warning light

7 Air condition

8 Skylight wiper

9 Intermittent operation - Front window wiper

10 Front window wiper

11 Working lights

12 Travel speed slow/fast

13 Parking brake

14 Oscillating axle lock-up

15 Overload warning system

16 Indicator light - Overload warning system

17 Indicator light - EMR

18 Automatic idling

19 Engine speed control

20 Starter lock/Start engine

https://truckmanualshub.com/

Overload warning system

The overload warning system serves as an alert to inadmissible loading levels. It will not avert the tipping hazard however! The tipping hazard increases when the radius is extended. In case of tipping hazard (when warning signal has sounded)

- Land the load immediately, or
- Reduce the radius/the load.

Danger
For all operations involving lifting equipment, activate the overload warning system.

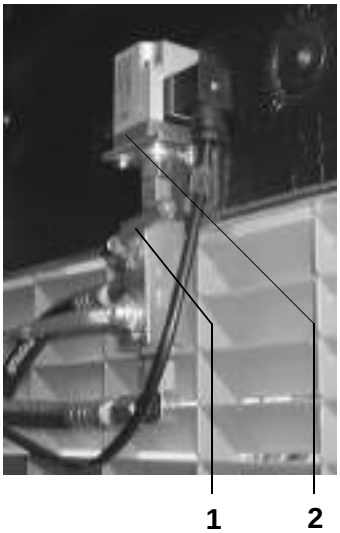

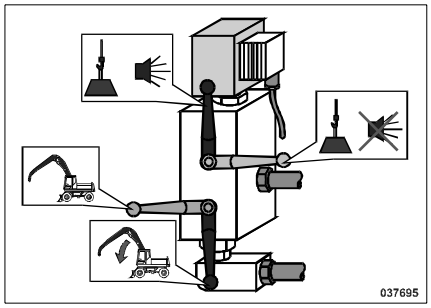

1 Lever - Overload warning system

2 Pressure switch

Shown here: deactivated

1	Move overload warning system lever (2) up into the vertical position.
2	On the right-hand control panel, turn on the *Overload warning system* switch.
3	Check warning system for proper operation: – Fully raise the compact boom so that the boom cylinder extends as far as its stop. – The *Overload warning system* indicator light on the right-hand control panel will come on. – A horn signal will sound.

https://truckmanualshub.com/

Automatic idling

The automatic idling system reduces engine speed automatically when no work movement has been performed for a few seconds. When a control lever is operated, adjustment to the speed level preset at the engine speed control is effected immediately.

Oscillating axle lock-up

The machine is fitted with an oscillating front axle. After disengagement of the lock, the oscillating axle is able to compensate for uneven underfoot conditions.

Warning

- Tipping hazard!
  For traveling with a load, lock the oscillating axle.
- When traveling in uneven terrain, unlock the oscillating axle.

https://truckmanualshub.com/

5.3.9 Central Lubrication System (Option)

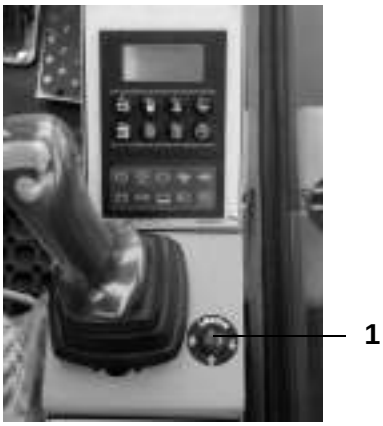

1 Push button - Additional lubrication

Push button (1) can be used to initiate additional lubrication. That means, an additional lubricating operation is performed in between the intervals that have been preset. This is to be recommended

- before and after any extended out-of-service periods;
- at major exposure to dust and dirt;
- in case of important temperature variations;
- in high-humidity environments.

Note
Further information on operation of the central lubrication system is provided in a separate instruction. It can be found in Section 10.3.

https://truckmanualshub.com/

5.4 Heating System

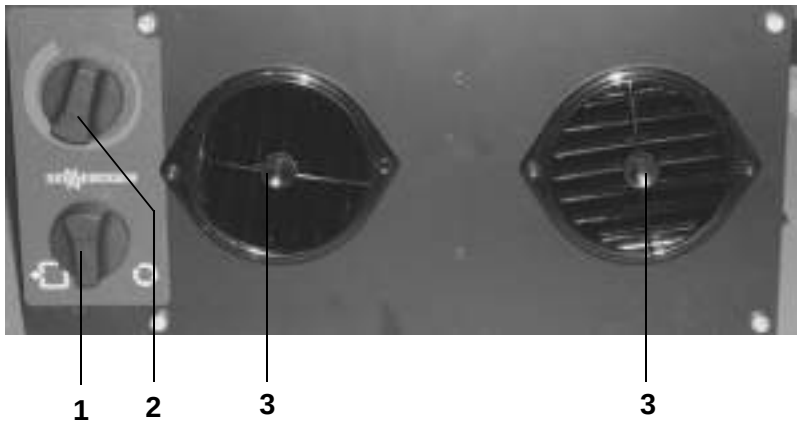

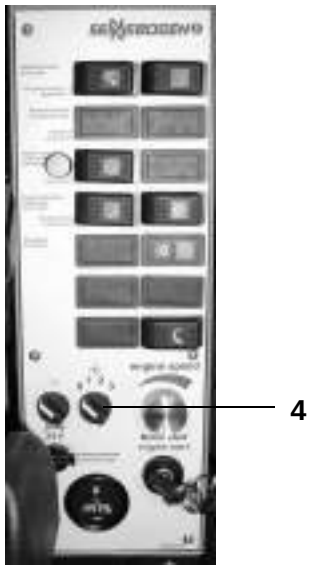

1 Outside air/recirculation air selector knob

2 Temperature variable control

3 Air vents

4 Blower fan switch, three-stage (right-hand control panel)

The heating system can be run on outside air, on recirculation air or in mixed air mode.

Outside air mode

To defog the cab when moisture has formed on the windows.

Recirculation air mode

Faster heating-up of the cab and also higher end temperature.
The air is made to circulate inside the cab, i.e., there is no supply of fresh air from the outside. Do not leave this mode of operation on for more than 15 minutes, otherwise the air quality in the cab will deteriorate markedly. Take care to ensure adequate supply of outside air.

Mixed air mode (neutral position)

Normal mode of operation.

https://truckmanualshub.com/

5.5 Optional Equipment

5.5.1 Air Conditioner (Option)

Warning

- Have any maintenance and repair work performed by adequately trained skilled personnel only.
- Do not reach into the conditioner and do not insert any objects.
- Perform maintenance operations only with the engine shut down and with the blower fan disconnected.
- Burning hazard!
  Allow the conditioner and the components fitted inside (heat exchanger, resistors) to cool completely first.
- Avoid contact with refrigerant.
- Wear safety glasses.

The air conditioner controls the temperature as a function of the outside temperature.

Activating air conditioner

1	Operate engine until it has reached operating temperature.
2	Switch on the blower fan at the right-hand control panel.
3	Open air inlet vent in the operator's seat console or at the front window to prevent icing of the evaporator.
4	Press switch for air conditioner on the right-hand control panel.
5	Use temperature variable control (2) on the heater to adjust the desired temperature.

Note
Operate the air conditioner at regular intervals.
Put the air conditioner into operation for at least 5 minutes every week.
This will help to keep the air conditioner in a serviceable condition.

https://truckmanualshub.com/

5.6 Operating Technique

5.6.1 Safety Information

Danger

- Be sure to observe Chapter 1 SAFETY.
  Before the machine is put into operation, perform the checks as specified in Section 4.3.
- Persons who operate the machine or work on it must have received adequate training or instruction.
  Operation and application must be performed only by persons that have been duly instructed.
- Exercise extreme caution when overriding stick limiting stops.
- Make sure that there are no persons in the danger area.
- Maintain a safety clearance to overhead lines.
- Operate the machine only while you are in the operator's seat.
- Do not use the machine for handling of personnel.
- Make due allowance for ambient conditions, e.g., poor visibility, wind speeds, etc.
- Use the correct load rating chart belonging to the machine.
- Observe performance specifications.
- Check whether the load capacity of attachment points is adequate.
- Obey the signals given by signal persons, where applicable.
- For any long-distance travel, put the boom in the direction of travel.
- Before leaving the operator's cab:
  - Fully lower the cab, where applicable.
  - Park the machine on a safe surface. Back off from the edge of an excavation, where applicable.
  - Lower any attached loads to the ground.
  - Secure the working attachments.
  - Pull the safety lever backward.
  - Block the tires/undercarriage.
  - Stop the engine.
  - Lock the operator's cab; use warning lamps to mark the machine, where applicable.

https://truckmanualshub.com/

5.6.2 Boom Stop (Option)

The boom stop feature can be used to limit upward movement of the boom.

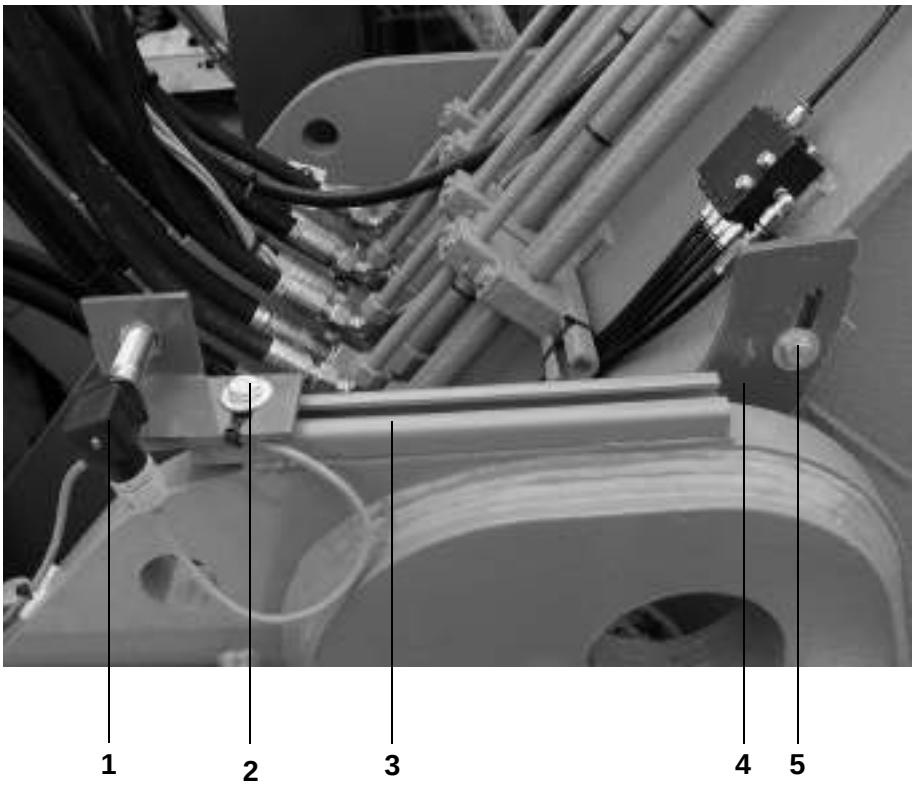

Caution
Take care to ensure that the cylinders do not move against the stroke end stops.

1	Loosen hexagon bolt (2).
2	Adjust the location of sensor (1) with bracket in rail (3).
3	Retighten hexagon bolt (2).
4	For fine adjustment, loosen hexagon bolt (5).
5	Relocate release plate (4).
6	Retighten hexagon bolt (5).

https://truckmanualshub.com/

5.6.3 Stick Limiting Stops (Option)

Stick out

The stick-out limiting stop serves to prevent that the cylinders operate to the end of the stroke when the stick is moved out. The limit switch of the stick-out limiting stop is located on the right side of the stick.

Stick in

The stick-in limiting stop serves to prevent that attachments and parts of the load hit and penetrate the operator's cab. The limit switch of the stick-in limiting stop is located on the left side of the stick.

In exceptional cases it may be necessary to move the stick on past the limiting stop (override the stick limiting stop).

Danger
Overriding stick limiting stops could result in injury or death!
Attachments and parts of the load can hit and penetrate the operator's cab. Exercise extreme caution.
Keep your eyes on the attachments and the load. Engagement in this practice is solely the personal responsibility of the operator.

Overriding stick-in limiting stop

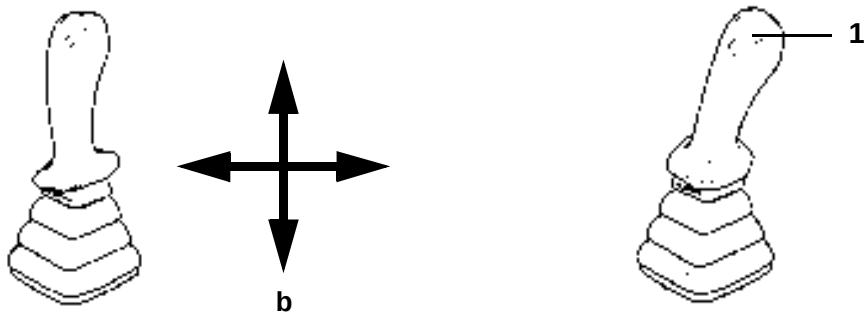

Left-hand control lever

1 Push button - Right-hand control lever

1	Press push button (1) on right-hand control lever and keep it depressed.
2	Pull left-hand control lever in the direction of "b", exercising extreme caution in the process. Take care to avoid the cab getting damaged.

https://truckmanualshub.com/

Adjusting stick limiting stops

The factory settings of the stick limiting stops are as follows:

- Stick in: Stick about 2.5m (8.2 ft) from the lowered cab
- Stick out: Cylinder about 1m (3.28 ft) from end position

Note
When the machine is put in service, and after any change of attachments, you must adjust the stick limiting stops to fit the new requirements.

Adjusting stick-in limiting stop

The setting will vary

- with the attachment fitted and
- with the load to be moved.

Danger
Misadjustment of the stick-in limiting stop could result in injury or death! Attachments and parts of the load can hit and penetrate the operator's cab. Operating the machine with the stick-in limiting stop misadjusted or overridden is solely the personal responsibility of the operator.

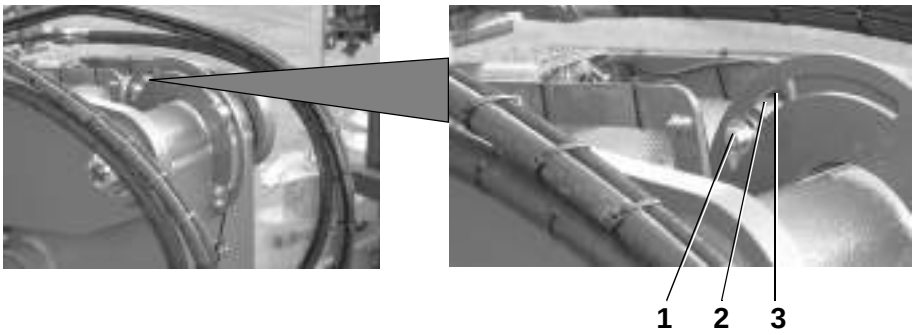

1	Fully lower the operator's cab.
2	Cautiously move the stick in until the required safe distance (about 2.5m/8.2 ft) from the cab has been attained. Allowance must also be made for the pendulum swing of attachment and load.
3	Lower the boom.
4	Loosen screw (1) of the actuator (2).
5	Shift the actuator (2) to the point where the limit switch (3) responds.
6	Retighten screw (1).
7	Check the setting and repeat the procedure, if necessary.

https://truckmanualshub.com/

Adjusting stick-out limiting stop

The limit switch of the stick-out limiting stop is located on the right side of the stick.

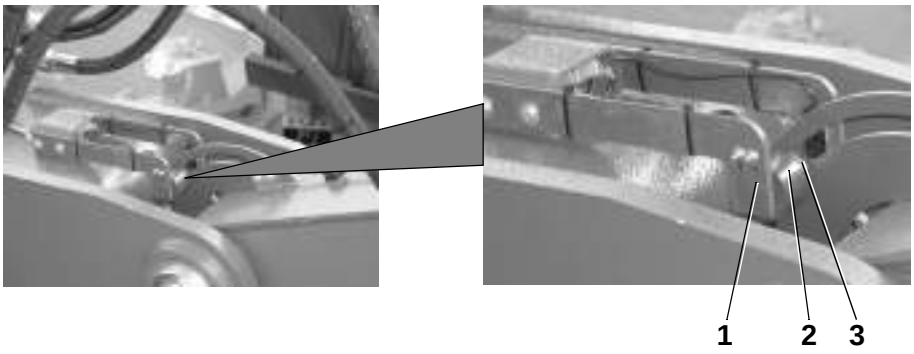

1	Fully lower the operator’s cab.
2	Move the stick out. Stop about 1m (3.28 ft) before the cylinder end position is attained.
3	Lower the boom.
4	Loosen the screw (3) of the actuator (2).
5	Shift the actuator (2) to the point where the limit switch (1) sponds.
6	Retighten screw (3).
7	Check the setting and repeat the procedure, if necessary.

https://truckmanualshub.com/

5.6.4 Traveling the Machine

Danger
Incorrect operation involves risk of accidents!
When the boom is over the rear axle, the operational movements of the machine are in the reverse way. Exercise extreme caution when you choose to work or travel with the boom over the rear axle.

Traveling with suspended load

When traveling with a suspended load, take the following precautions:

- Tipping hazard!
  Carry loads as close to the ground as practicable.
- Be sure to position the boom in line with the undercarriage.
- Do not attach more than 50% of the allowable load.
- Travel on even terrain of adequate bearing capacity only.
- Lock the oscillating axle.
- Move about smoothly to minimize pendulum motion of the load.
- Make turns at the widest possible radius.

Traveling

1	Retract outriggers, where applicable.
2	Release parking brake.
3	Select either off-road or on-road travel.
4	Where applicable, disengage oscillating axle lock at right-hand control panel.
5	Use travel pedal and speed adjustment control on right-hand control panel to adjust travel speed.
6	Use the brake pedal to slow down the machine.
7	Stop the machine as specified in Section 4.4.3.

Note
Take care to avoid excessive heating of the hydraulic oil. Do not keep the steering system in the steering lock position longer than is necessary.

https://truckmanualshub.com/

5.6.5 Stabilizing the Machine

The outriggers are used to stabilize the machine in uneven terrain. This serves to provide greater stability. With outriggers on ground, the machine is able to lift greater loads (see also Section 3.2).

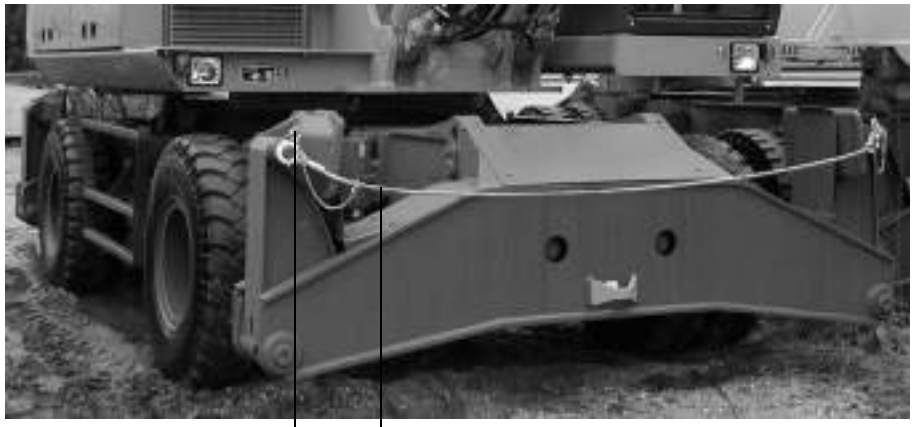

Extending outriggers

1	Detach transport lock: – Remove the four locking springs (1) at the front and at the rear. – Detach the two locking ropes (2). – Securely store the ropes and springs.

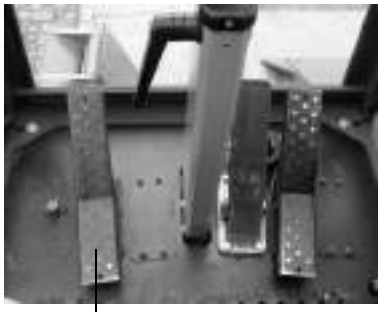

https://truckmanualshub.com/

2	Start engine as specified in Section 4.4.2.
3	Where applicable, activate the oscillating axle lock at the right-hand control panel.
4	Push steering column lever (3) downward. A warning signal sounds.

Warning
Put outriggers down on a firm, level supporting surface.
Do not use outriggers to raise the machine off the ground. The tires must maintain contact with the ground.

5	Collective control: – Depress foot pedal (5) forward until the outriggers have been extended. Individual control (option): – Press and hold the corresponding keys on the left-hand control panel (4). – Depress foot pedal (5) forward until the outriggers have been extended.
6	Pull steering column lever (3) up again. The warning signal ceases.

Retracting outriggers

1	Start engine as specified in Section 4.4.2.

Danger
Make allowance for reduced lifting capacity in “free on wheels” operation!

2	Push steering column lever (3) downward. A warning signal sounds.
3	Depress foot pedal (5) backward until the outriggers have been retracted.
4	Pull steering column lever (3) up again. The warning signal ceases.
5	For transport, fit the two locking ropes (2) and lock them by means of the four locking springs (1).

https://truckmanualshub.com/

5.6.6 Swinging the Upper Structure

To swing the upper structure, use is made of the *left-hand* control lever.

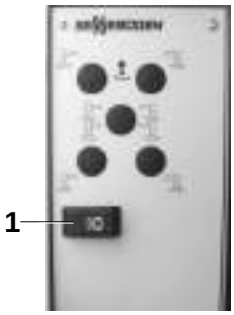

1 Switch - Slew gear brake

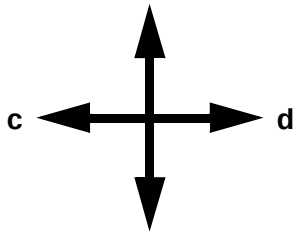

Directions of movement:

c Swing upper structure to left

d Swing upper structure to right

Swing speed

Swing speed is dependent on:

- Speed of the engine
- Movement of the left-hand control lever

Danger
The area of swing of the upper structure (danger area) must be clear of personnel, building structures or machines.

Stopping swing motion (deceleration)

Move the control lever to the neutral (zero) position.
The upper structure is decelerated hydraulically. Swing motion will ease off to a stop.

Note
Moving the control lever in the opposite direction will intensify deceleration.

Apply the slew gear brake

Push the switch (1) in the left-hand control panel „left“.
The slew gear brake is activated.
The lamp in the switch (1) and the control light in the SDS is lighting.

Release the slew gear brake

Push the switch (1) in the left-hand control panel „right“.
The slew gear brake is released.
The lamp in the switch (1) and the control light in the SDS is not lighting.

https://truckmanualshub.com/

Slewing gear brake

The slew gear brake is not an operational brake for braking the superstructure. The slew gear brake is designed as a parking and holding break for when the superstructure is at rest.

The superstructure must have completely stopped turning before the slew gear brake is applied.

Warning
Using the slew gear brake to brake the superstructure will result in considerable damage to the brake and/or to the slewing gear.

The following damage may occur:

- Diminished braking effect due to damage to discs
- Irreparable damage to slewing gear
- Irreparable damage to brakes or other components.

This damage is not covered by the warranty issued by Sennebogen Maschinenfabrik GmbH.

The operator of the machine is solely liable for damage of this kind and for any consequential damage, for example, due to diminished braking effect.

Warning
Never rotate the superstructure when the slew gear brake is applied.

Note

The slew gear brake is applied automatically as soon as the

- safety lever is actuated (pulled backward) or
- the motor is switched off (emergency shut-down, key switch).

If circumstances are unfavorable it can take approx. 30 seconds before the full breaking effect is achieved.

https://truckmanualshub.com/

5.6.7 Lifting/Lowering Loads

Be sure to observe the following safety precautions:

Warning

- Suspended loads involve risk of accidents!
  Whenever work is interrupted, be sure to lower the load to the ground.
  Never leave the operator's cab with a load suspended.
- Activate the overload warning system.
- Refrain from any operating practice impairing the stability of the machine.
- Attachments (e.g., grabs) and parts of the load may swing. Exercise extreme caution.
- Mind the danger area.

To lift/lower the load, use is made of the *right-hand* control lever.

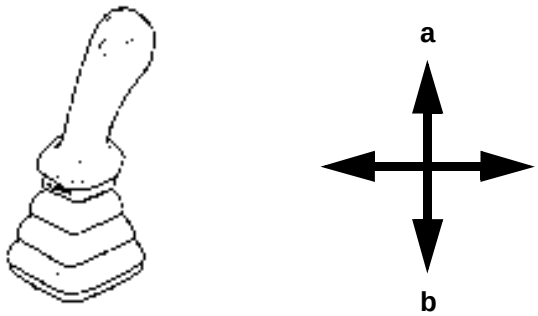

Directions of movement:

a Lower the load

b Lift the load

Lifting speed

Lifting speed is dependent on:

- Speed of the engine
- Movement of the right-hand control lever

https://truckmanualshub.com/

5.6.8 Grab Operation

Be sure to observe the following safety precautions:

Warning

- Suspended loads involve risk of accidents!
  Whenever work is interrupted, be sure to lower the load to the ground.
  Never leave the operator's cab with a load suspended.
- Activate the overload warning system.
- Refrain from any operating practice impairing the stability of the machine.
- Attachments (e.g., grabs) and parts of the load may swing. Exercise extreme caution.
- Mind the danger area.

To open/close the grab, use is made of the *right-hand* control lever.

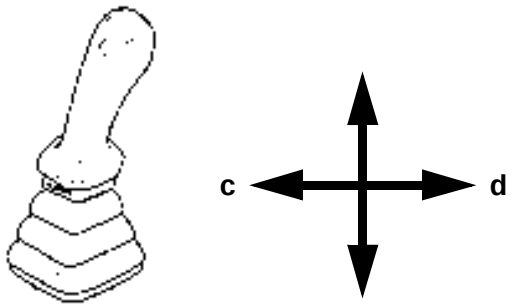

Directions of movement:

c Close the grab

d Open the grab

https://truckmanualshub.com/

5.6.9 Generator and Magnet System (Option)

Be sure to observe the following safety precautions:

Danger

- Risk of serious injury or death!
  Suspended loads involve risk of accidents!
  In the event of the magnet system failing, the load will drop off.
  Whenever work is interrupted, be sure to lower the load to the ground.
  Never leave the operator's cab with a load suspended.
- Activate the overload warning system and check for proper operation.
- Dangerous voltages may occur during operation.
- Generator components may still be very hot also after operation.
- Pushing in/withdrawal of plug-in connections during operation is prohibited.
- Installation/commissioning of the generator as well as maintenance and service operations on the magnet system must only be performed by authorized and qualified personnel.
- Do not operate the magnet system until you have read the operation manual.
- Use only approved accessories. Consult the Sennebogen service department.
- Operation is permitted with magnet plates only; other applications are inadmissible.
- Observe operational data.
- Cleaning by high-pressure cleaner (steam cleaner) is not allowed.
- The condensate drain openings must be located at the lowest point.
- Observe any further safety regulations.
- Performance of modifications on the generator (e.g., place of installation, type of drive) is not allowed.

https://truckmanualshub.com/

Operation

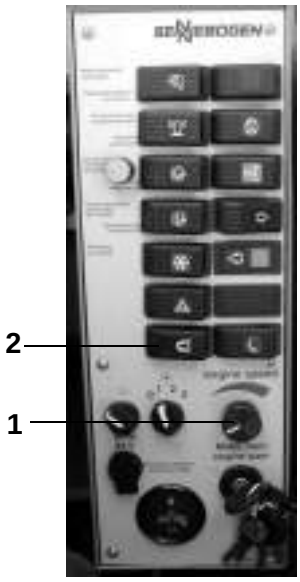

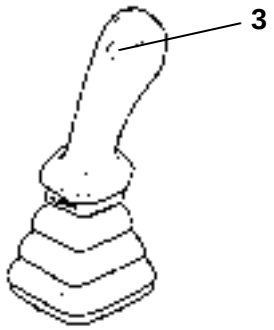

1	Start engine as specified in Section 4.4.2.
2	Adjust engine speed control (1) to high idle.
3	Place the magnet on the load.

Warning
Make sure the allowable load capacities are not exceeded.

4	Turn magnet on: – Unlock and operate switch (2). – Press push button (3) on right-hand control lever. The magnet system is turned on.
5	Put load down: – Press push button (3) again. The magnet system is turned off.

Note
The automatic idling system is deactivated for as long as the magnet system is on.

https://truckmanualshub.com/

Note
Information on operation of the monitoring unit (4) is provided in a separate instruction. It can be found in Section 10.3.

https://truckmanualshub.com/

5.6.10 Refueling the Machine

There are two possible ways of refueling the machine:

- Manually
- Using a refueling pump

Danger

- Fuel must be precluded from getting into the soil or the waters. While refueling keep a constant watch to avoid spillage of fuel.
- For refilling the machine must be stopped.
- Fuel is detrimental to health and is flammable. Smoking and handling of naked flames is strictly prohibited.

Note

You should also observe the fuel system information provided in the engine manufacturer's operation manual.

Manually

1	Land any attached loads and lower the boom to the ground.
2	Stop the engine.

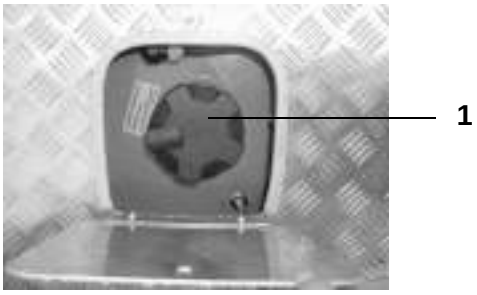

3	Fold back the cover plate at the upper structure.
4	Open cap (1) of the filler neck.
5	Clean the strainer.
6	Install a funnel in the filler neck.
7	Fill in fuel carefully through the funnel.
8	Re-close cap (1) and the cover plate.

https://truckmanualshub.com/

Using a refueling pump

1	Land any attached loads and lower the boom to the ground.
2	Stop the engine.
3	Move keylock switch to position “P”.
4	Open the left service access door.
5	Open the filler neck lid. This lets the air escape from the fuel tank.

6	Fit the refueling hose (1) into the external fuel tank.

Note
Risk of cavitation!
Take care not to exceed the maximum suction head of 3 meters.

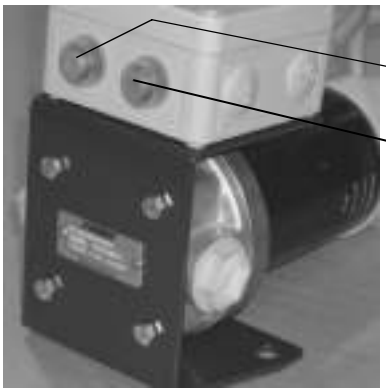

7	Press the green key (2) to turn the refueling pump on. The tank will be filled automatically.

Caution
Take care to avoid the pump running dry (> 30 s).
Where necessary, use the red key (3) to turn off the refueling pump to prevent damage.

https://truckmanualshub.com/

8	Monitor the filling level at the sight gauge of the fuel tank. The pump will cut out automatically once the tank has been filled right up.
9	Remove the refueling hose from the external fuel tank and store it securely.
10	Reclose the filler neck lid.
11	Re-close the service access door.

Should the refueling pump fail to start after about 5 seconds, perform the following checks:

1	Is battery charge adequate?
2	Are all fuses OK?
3	Is the suction side free of leaks?
4	Is the suction head less than the maximum lift of 3 meters (9.84 ft)?

https://truckmanualshub.com/

https://truckmanualshub.com/

6 Maintenance

Warning
The maintenance operations set out below must only be performed by qualified personnel that has received adequate training and instruction.

Section 6.1 SAFETY INFORMATION lists basic safety precautions relating to machine maintenance.

Section 6.2 GENERAL INFORMATION provides specifications and information on cleaning operations, on oils and greases, and on welding.

Section 6.3 to Section 6.7 provide instructions for maintenance of the individual assemblies.

Section 6.9 APPENDIX provides additional information such as maintenance schedule, lubrication points schedule and bolt tightening torques.

https://truckmanualshub.com/

6.1 Safety Information

Warning

- The maintenance work described may only be carried out by trained and instructed specialist personnel.
- Wear personal protection equipment (e.g. safety helmet, ear protection, protective gloves, safety boots) where working conditions require.
- Observe the applicable statutory accident prevention and safety regulations.
- Land any attached loads, and lower the boom to ground level.
- Pull the left safety lever backwards.

- Before attempting to perform any maintenance, shut down the machine and secure it against unauthorized restarting.
- Attach a warning tag to the controls.
- Do not smoke and do not allow open flames.
- Use personnel hoists or work platforms that satisfy safety requirements.
- Stay clear of all rotating and moving parts.
- Relieve the pressure before working on the hydraulic system.
- Always wear protective gloves when handling wire ropes.
- Use only genuine Sennebogen spare parts.
- Use only those oils and lubricants that are specified in the lubricants chart.
- Do not lift heavy components by hand. Use hoists or lifting equipment.

- Actuate battery isolator switch to interrupt the power supply.
- When working near battery, cover with insulating material; do not lay tools on the battery.
- On completion of the maintenance operations, reinstall all guards and protective devices.
- Keep the operator’s cab clean and tidy.
- Perform a functional check to ensure proper operation.
- On completion of any maintenance operations, only the crane owner or his agent is permitted to clear the machine for service again.
- For machines with pneumatic tires: When inflating tires, keep an adequate safe distance and use a tire cage.

https://truckmanualshub.com/

Danger

- Have any work on electrical equipment of the machine performed by a qualified electrician only.
- Only qualified personnel having received relevant training is allowed to perform work on undercarriages, braking and steering systems!
- Work on hydraulic equipment must only be performed by personnel having specific knowledge and experience of hydraulics!

https://truckmanualshub.com/

6.2 General Information

6.2.1 Cleaning

Notes

- Take care to ensure that the cleaning solvents used will not damage the seals, gaskets and other machine components.
- Do not use any aggressive cleaning solvents.
- Use only lint-free cleaning rags.
- Use only dry filtered compressed air of a maximum pressure of 2 bar.
- On completion of cleaning, perform a visual inspection and a functional check of the machine as specified in Section 4.3.

Warning

The electrical system is splash-proof to IP56 specifications. However, the use of a high-pressure cleaner (steam cleaner) for washing of electrical and electronic components is not allowed.

There is a risk of damage to the electrics of the machine from penetrating water. This can result in uncontrolled working movements being suddenly performed.

https://truckmanualshub.com/

6.2.2 Oils and Lubricants

Use only oils and lubricants that have been approved by Sennebogen. For a list refer to Section 10.2 LUBRICATION-TABLE. For proper operation of the machine, the ambient temperature may range between - 20 °C and + 50 °C (-4 °F ... 122 °F). When job site temperatures are outside this range, consult the Sennebogen service department before placing the machine in service.

Oil analysis

Sampling and analyzing the oil at regular intervals will help to avoid unnecessary costs. A number of tests are carried out to establish:

- the condition of the oil
- the amounts of the wear metals in the sample
- the rates of component wear

Recommended for the hydraulic system.

Further information is available from the Sennebogen service department.

Biodegradable oils and lubricants

Use of these materials is mandatory in those cases where leakage of oils and lubricants on a mineral-oil basis would present a hazard to the environment. The use of environmentally friendly lubricants is a requirement in water and nature reserve areas in particular.

Use must only be made of synthetic ester based biological oil.

Warning
Any conversion to bio-oils and biological lubricants is not permitted until after the Sennebogen service department has been consulted and written approval has been obtained.

https://truckmanualshub.com/

6.2.3 Welding

Safety information

Note the safety information before you start work.

Warning

- Fire hazard!
  Do not weld on the fuel tank, on the hydraulic tank and on any lines containing fuel or oil. Any components at risk must be covered with non flammable material.
- Have any welding operations performed by an experienced qualified welder only.
- Have any welding operations performed by a certified and experienced qualified welder only.

Preliminary operations

Before you begin welding, perform the following preliminary operations:

1	Operate the optional battery disconnect switch to interrupt power supply.
2	Disconnect the battery.
3	Connect the ground terminal of the welding apparatus directly to the component to be welded.

https://truckmanualshub.com/

6.3 Engine

Safety information

Note the safety information before you start work.

Caution

- Perform maintenance operations or repairs only with the engine stopped and cooled down.
- Secure the machine against unauthorized restarting before starting any maintenance procedure.
- Spent oil must be precluded from getting into the soil or the waters. Dispose of oil and oil filters according to the applicable statutory regulations.
- Coolant must be precluded from getting into the soil or the waters. Dispose of coolant according to the applicable statutory regulations.
- On completion of maintenance work on the engine, make sure that all protective guards are installed correctly and that all tools have been removed from the engine.

Note

You should also observe the information and recommendations provided in the engine manufacturer’s operation manual.

https://truckmanualshub.com/

6.3.1 Engine Oil

Warning

- Scalding hazard!
  Exercise extreme caution when draining hot oil.
- Spent oil must be precluded from getting into the soil or the waters. Dispose of oil and oil filters according to the applicable statutory regulations.
- Note the information provided in the engine manufacturer's operation manual.

Checking engine oil level

1	Park the machine on level ground.
2	Operate the engine for about 2 minutes until the system is filled with oil.
3	Stop the engine.
4	Open the right-hand service access door.
5	Withdraw the oil dipstick and wipe it with a clean lint-free cloth.
6	Insert the oil dipstick as far as its stop and withdraw it again.
7	Check the oil level: The oil level must be in the area between the lower mark (MIN) and the upper mark (MAX).
8	Add engine oil as necessary.

Changing engine oil and replacing oil filter

1	Warm up the engine.
2	Park the machine on level ground.
3	Open the right-hand service access doors.
4	Change the engine oil and replace the oil filter as specified in the engine manufacturer's operation manual.
5	Check the oil level: The oil level must be in the area between the lower mark (MIN) and the upper mark (MAX).
6	Add engine oil as necessary.

https://truckmanualshub.com/

6.3.2 Air Filter

Safety information

Note the safety information before you start work.

Caution

- Never use benzine, alkaline solutions or hot liquids for cleaning of the air filter.
- On no account must the inside of the housing be cleaned by using compressed air, otherwise dust and contaminants could get blown into the engine.

Air filter indicator light

The condition of the air filter is monitored by a sensor.
To determine the degree of fouling, resistance to air flow is measured. When the maximum permissible resistance to air flow has been reached, the *Air filter* indicator light on the right-hand control panel comes on.
An audible warning signal sounds at the same time. Check and clean the air filter immediately.

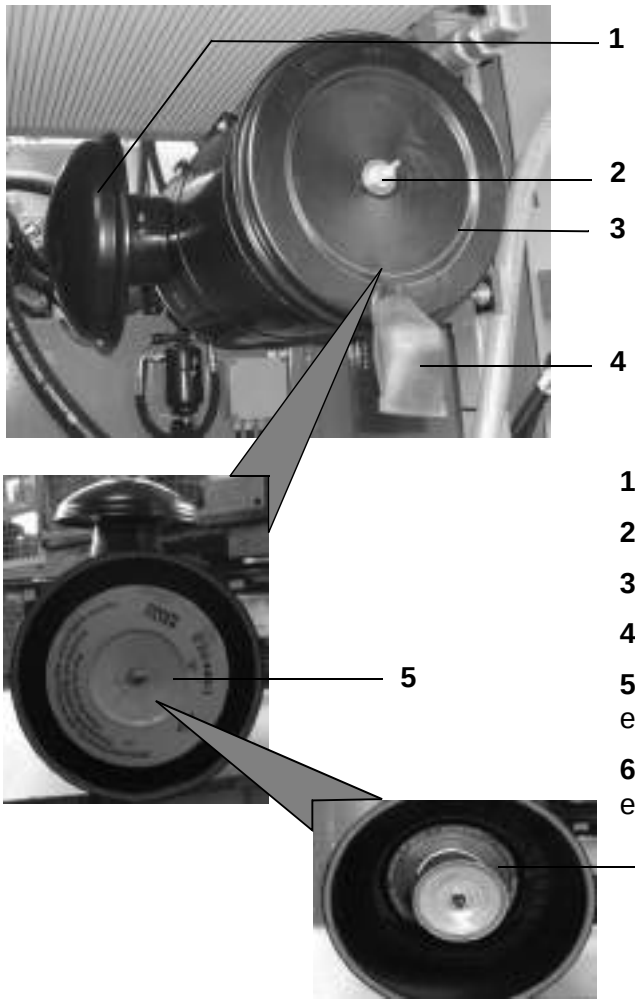

1 Protective cover

2 Wing nut

3 End cover

4 Dust ejector

5 Primary filter element

6 Secondary filter element

https://truckmanualshub.com/

Cleaning

1	Remove protective cover (1) and empty the dust collector.
2	Re-install protective cover (1).
3	Loosen wing nut (2) and remove end cover (3).
4	Compress dust ejector (4) at the end cover to empty the ejector.
5	Unscrew the hexagon nut and withdraw primary filter element (5).
6	Clean the primary filter element (5): – Use dry compressed air (max. 2 bar / 29.0 psi) to blow it out from the inside to the outside. – Bump or tap it in case of need only!
7	Check the primary filter element for damage to the filter paper and to the seals or gaskets. Replace if necessary.
8	Replace the secondary filter element (6) not later than after the filter has been serviced 5 times: – Unscrew the hexagon nut. – Withdraw the secondary filter element. Do not attempt to clean secondary filter element (6)! – Install and screw down a new secondary filter element.
9	Install and screw down new or cleaned primary filter element (5).
10	Install end cover (3) so that dust ejector (4) is pointing downward.
11	Use wing nut (2) to screw down the end cover.

https://truckmanualshub.com/

6.3.3 Radiator

Safety information

Note the safety information before you start work.

Warning

- Risk of injury caused by rotating parts! Scalding hazard!
  Perform maintenance operations only with the engine shut down and after the cooling system has cooled.
- Coolant must be precluded from getting into the soil or the waters. Dispose of coolant according to the applicable statutory regulations.
- Mixing nitrite-base cooling system conditioners with amine-base conditioners will result in formation of nitrosamines which are injurious to health.

Coolant level indicator light

The filling level of the coolant is monitored by a sensor.
When the filling level falls below a specific mark, a buzzer sounds.

Checking and cleaning

1	Allow the engine and the radiator to cool.
2	Open the filler cap of the radiator slowly and carefully to relieve the pressure.
3	Check antifreeze content and coolant level; add as necessary. The coolant must contain at least 50% antifreeze all the year round.
4	Use dry filtered compressed air (max. 2 bar / 29.0 psi) to blow-clean the cooling fins from the exhaust air side. If grease and oil has accumulated on the cooling fins, clean them by means of a cold cleaner.
5	Check the radiator for leaks and for damaged cooling fins.

Note

For change of the coolant, refer to the information provided the engine manufacturer's operation manual (section 10.3).

https://truckmanualshub.com/

6.3.4 Belt drives

Safety information

Note the safety information before you start work.

Danger

- Perform any maintenance operations only with the engine shut down at standstill.
- Secure the machine against unauthorized restarting before starting any maintenance procedure.
- On completion of maintenance work on the engine, make sure that all protective guards are installed correctly and that all tools have been removed from engine.
- Take care to ensure that the V-belts operate in parallel.

Note

For inspecting, adjusting and replacing the belt drives, refer to the information provided in the engine manufacture's operation (section 10.3.1).

https://truckmanualshub.com/

6.4 Hydraulic System

Safety information

Note the safety information before you attempt to perform operations on the hydraulic system.

Danger

- High oil pressure warning!
  The hydraulic system is under high pressure. When a hydraulic line or fitting is disconnected, or in case of a leakage, escaping hydraulic oil can cause serious personal injury.
  Perform any work on the hydraulic system only after all pressure has been relieved!
- Relieve the pressure before working on the hydraulic system (section 6.4.2).
- The pilot system incorporates an accumulator which continues to be under high pressure even after the engine has been shut down. The accumulator pressure must therefore be relieved.
- Do not open any hydraulic lines and fittings unless all pressure has been relieved.
- Work on the hydraulic system must only be performed by trained qualified personnel having specific knowledge and experience of hydraulics.
- Wearing personnel equipment (e.g. hard hat, hearing protective devices, protective gloves, safety shoes).

Cylinders

Pressure cylinders show minor leakages. Use a rag to remove any excessive leakage oil. Dispose of the oily rag as hazardous waste. The sliding surfaces of the piston rods are chrome plated. Any major leakages are indicative of damaged sliding surfaces or defective seals.

Clean hydraulic cylinders:

- Use neither sharp-edged tools nor corrosive liquids or scouring agents.
- Wash the piston rods at regular intervals, using a high-pressure cleaner.
- On completion of cleaning, provide the extended piston rods with a protective coating. This serves to protect the surface against environmental and atmospheric influences.

Fittings

Check hydraulic fittings and couplings for leaks at regular intervals. Seal any points of leakage and remove oil stains.
Leaked or spilled hydraulic oil is harmful to the environment and is a source of danger as it involves a risk of slippage.

Be sure to immediately seal both sides of disconnected fittings by means of plugs.

https://truckmanualshub.com/

6.4.1 Hydraulic hose lines

Time limits for storage and use

Even when stored and used properly, hoses and hose lines are subject to natural deterioration due to aging. For this reason, their use is limited to a specific period of time.

The operator is responsible for ensuring that hose lines are changed in adequate time intervals, even if there are no evident signs of damage to hose line that could pose a safety hazard.

Use of a hose line, including possible storage for up to two years, is not to exceed a period of six years.

Routine checks

Hose lines must be checked by qualified personnel at least once a year to ensure that they are safe and in working order.

Any problems with hoses must be eliminated immediately.

Defective hoses

Hose lines must be replaced in the following instances (see also DIN 20066):

- Damage found on outer layer up to the lining (e. g. chafe marks, cuts, cracking);
- Outer layer has become brittle (formation of cracks in the hose material);
- Deformation affecting the original shape of the hose or hose line and occurring in both a pressurized and non-pressurized state or when hose is bent (e. g. layer separation, formation of blisters);
- Presence of leaks;
- Damaged or deformed hose fittings (sealing capability is impaired);
- Hose has slipped out of hose fittings;
- Corrosion of the hose fittings which affects the ability of the hose to function and seal properly;
- Hose does not fulfill installation requirements;
- Permitted period of storage and/or use has been exceeded.

https://truckmanualshub.com/

6.4.2 Hydraulic System Pressure Relief

To relieve the pressure in the hydraulic system, proceed as follows:

1	Land any attached loads and lower the boom to the ground.
2	Stop the engine, turn the ignition key back to position “1” immediately.
3	Operate both control levers in the operator’s cab in all directions several times. This serves to relieve the pressures both in the main hydraulic system and in the pilot system accumulator.

4	Unscrew grid (1).
5	Open screw cap (2) of the hydraulic tank. This serves to relieve the precharge pressure in the tank.

6	Connect a pressure gauge (to a maximum of 60 bar / 870.23 psi) to the gauge fittings (P1, P2, P3, P4, PV9).

Note
The pressure gauge must read 0 bar. If the pressure has not been relieved completely yet, repeat Steps 2 through 6.

https://truckmanualshub.com/

6.4.3 Checking Oil Level

1	Land any attached loads and lower the boom to the ground.
2	Park the machine on level ground.
3	Fully retract all hydraulic cylinders.
4	Stop the engine.
5	Open the right-hand service access door.

6	Check the oil level at oil level gauge (1): The oil level must reach as far as the upper mark (MAX).

A thermometer is integrated in the sight gauge. Here you can take a reading of the current temperature (°C/°F) of the hydraulic oil as well.

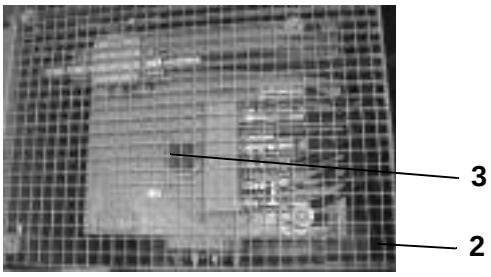

7	Add hydraulic oil as necessary: – Unscrew grid (2). – Unscrew screw cap (3) of the oil filler neck. – Add hydraulic oil and check the oil level again. – Replace and tighten screw cap (3). – Screw grid (2) back on.

https://truckmanualshub.com/

6.4.4 Changing Hydraulic Oil

Safety information

Note the safety information before you attempt to perform operations on the hydraulic system.

Danger

- High oil pressure warning!
  The hydraulic system is under high pressure.
  When a hydraulic line or fitting is disconnected, escaping hydraulic oil can cause serious personal injury.
  Perform any work on the hydraulic system only after all pressure has been relieved!
- Work on the hydraulic system must only be performed by trained qualified personnel having specific knowledge and experience of hydraulics.

Note

It will make work easier for you if you pump off as much of the oil as possible. Use the opening of the return flow filter for the purpose.

Procedure

1	Land any attached loads and lower the boom to the ground.
2	Park the machine on level ground.
3	Fully retract all hydraulic cylinders.
4	Relieve the hydraulic system pressure as specified in Section 6.4.2.
5	Remove the filter element of the return flow filter as specified in Section 6.4.5.
6	Place a suitable container underneath the drain port of the tank. For refill capacity refer to Section 6.9.3.

Caution

Take care to ensure that the container is of adequate capacity to hold the amount of oil.
Hydraulic oil must be precluded from getting into the soil or the waters.
Dispose of spent oil and oil filters according to the applicable statutory regulations.

https://truckmanualshub.com/

7	Unscrew cover nut (1).

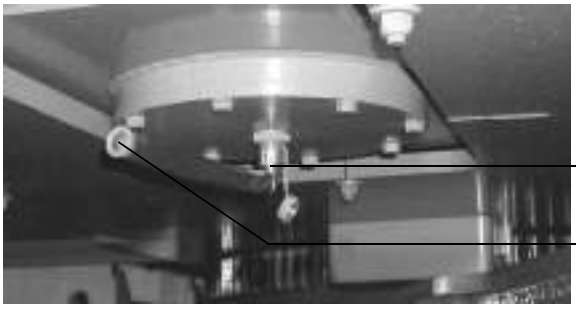

8	Screw in drain plug (2) until the spent oil comes out by way of plastic hose (3). Collect the spent oil in a suitable container.
9	Screw drain plug (2) back out.
10	Screw cover nut (1) back on.
11	Fill in new hydraulic oil through the filler neck at the top of the tank.
12	Prime the hydraulic pumps: – Clean the housing. – Release the vent screw at the pump. Do not screw it out completely; apply light thumb pressure to keep hold of it. – Allow a few seconds for the air to be expelled. – Retighten the vent screw.

Caution
Whenever the hydraulic oil has been changed, prime the pumps before returning them to service to avoid damage.

https://truckmanualshub.com/

6.4.5 Return Flow Filter – Replacing Filter Element

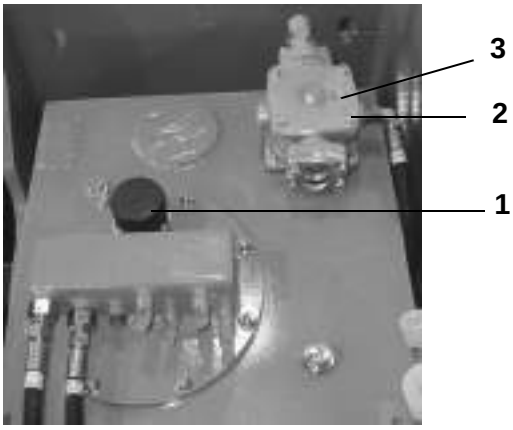

1	Open screw cap (1) of the hydraulic tank. This serves to relieve the precharge pressure in the tank.
2	Unscrew the four allen head screws (2).
3	Remove cover (3).
4	Withdraw the filter element and dispose of as hazardous waste.
5	Clean the components; check the seal and replace if necessary.
6	Install a new filter element.
7	Screw down cover (3) by means of the four allen head screws (2).
8	Tighten screw cap (1).

https://truckmanualshub.com/

6.4.6 Pilot Control Filter – Replacing Filter Element

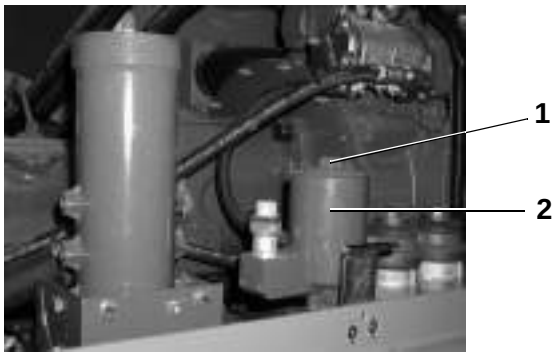

1	Open the right-hand service access door.
2	Unscrew filter housing (1).
3	Pull off filter element and dispose of as hazardous waste.
4	Clean the components; check the seals and replace if necessary.
5	Fit new filter element into filter housing (2).
6	Screw the filter housing by hand into the filter mounting head.
7	Check the filter for leaks.

https://truckmanualshub.com/

6.4.7 Leakage Oil Filter – Replacing Filter Element

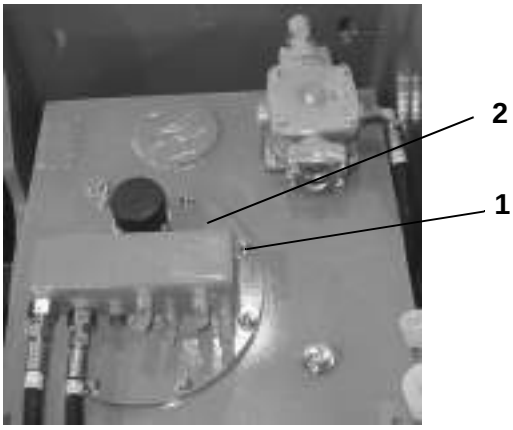

1	Loosen hexagon nuts (1).
2	Remove cover (2).

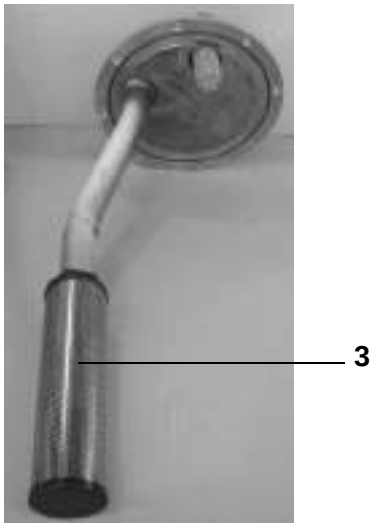

3	Unscrew filter element (3) from the return tube.
4	Screw a new filter element to the return tube.
5	Install the cover with the return tube in the tank.
6	Tighten hexagon nuts (1).

https://truckmanualshub.com/

6.4.8 Replacing Breather Filter

Note
The breather filter is integrated in the screw cap (2) of the filler neck. The effect of the breather filter is to limit the overpressure or underpressure building up in the hydraulic system during hydraulic work movements.

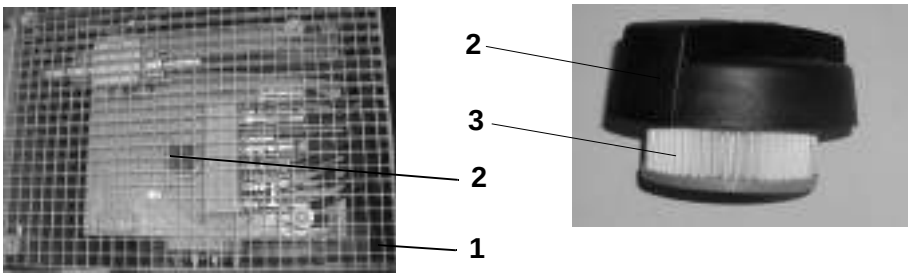

1	Unscrew grid (1).
2	Open screw cap (2) of the hydraulic tank. This serves to relieve the precharge pressure in the tank.
3	Pull off filter element (3) from the screw cap (2).
4	Dispose of filter element (3) as hazardous waste.
5	Fit new filter element (3) in the screw cap (2).
6	Screw on the screw cap (2) complete with breather filter (3).
7	Screw grid (1) back on.

https://truckmanualshub.com/

6.4.9 Hydro Clean – Superfine-Filter-System (Option)

Note
Pressure gauge (1) measures resistance to flow. At a resistance to flow of more than 5 bar (72.52 psi), no filtration of the hydraulic oil will take place. Once the pressure gauge reads 5 bar (72.52 psi), replace the filter element.

Replacing Filter Element

1	Unscrew cover (2).
2	Withdraw the filter element.
3	Remove the filter element and dispose of as hazardous waste.
4	Clean the components; check the seals and replace if necessary.
5	Install a new filter element.
6	Install cover (2) with the superfine filter element and screw it down by hand.
7	Check the filter for leaks.

https://truckmanualshub.com/

6.4.10 Checking Precharge Pressure of the Accumulators

Note
Checking of the precharge pressure is outlined below using the pilot system accumulator as an example.

1	Land any attached loads and lower the boom to the ground.
2	Connect a pressure gauge to the PV fitting at the test panel.
3	Stop the engine, turn the ignition key back to position “1” immediately.
4	Operate both control levers in the operator’s cab in all directions several times.
5	Watch the pressure gauge. Once the precharge pressure has been reached, the valve in the accumulator closes. The pressure gauge indicator drops to “0” abruptly. The reading prior to the pressure drop corresponds to the precharge pressure in the accumulator.
6	Compare the reading with the tolerance specification on the accumulator. If the precharge pressure is outside the tolerance, replace the accumulator or have it recharged with nitrogen.
7	Disconnect the pressure gauge.

Caution
Have an expert subject the accumulator to a pressure test and an internal check every 10 years/20,000 sh (service hours).

https://truckmanualshub.com/

6.5 Undercarriage

Warning

- Rotating parts can cause personal injury!
  Perform maintenance operations only with the engine shut down.
- Oil must be precluded from getting into the soil or the waters.
  Dispose of spent oil according to the applicable statutory regulations.

6.5.1 Cleaning and Lubricating

1	Park the machine on level ground.
2	Stop the engine.
3	Use a steam cleaner to clean tires and traveling gear.
4	Lightly grease the guides and pins.
5	Grease all lubrication points (see Section 6.9.2).

6.5.2 Tire Inflation Pressure (Machines with Pneumatic Tires)

Danger

When inflating tires, keep an adequate safe distance and use a tire cage.

Tire Size	Inflation Pressure	
	bar	**psi**
10.00-20	7.5	108.78
12.00-20	9	130.53
12.00-24	10	145.04
395/85	8.5	123.28

https://truckmanualshub.com/

6.5.3 Retightening Wheel Nuts

Verify that all wheel nuts are firmly secured in place. The tightening torque is 550 Nm. Use a torque wrench for tightening.

6.5.4 Hub Gears

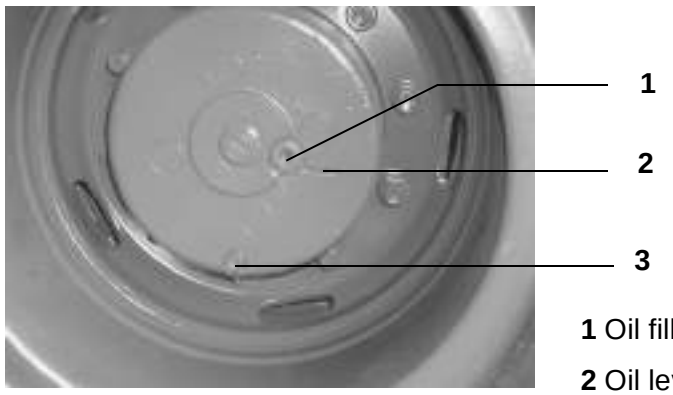

1 Oil filler plug

2 Oil level mark

3 Oil drain plug

Checking oil level

1	Park the machine on level ground.
2	Move the machine until mark (2) on the hub is horizontal.
3	Stop the engine.
4	Screw out oil filler plug (1). The oil level must reach as far as mark (2); add oil as necessary.
5	Clean the components; check the seal and replace if necessary.
6	Re-install and tighten oil filler plug (1).
7	Repeat the procedure for the three remaining hubs.

https://truckmanualshub.com/

Changing oil

1	Park the machine on level ground.
2	Move the machine until oil drain plug (3) is at the lowest point on the hub.
3	Stop the engine.
4	Loosen oil filler plug (1) to relieve the pressure.
5	Place a suitable receiving container underneath oil drain plug (3). For refill capacity refer to Section 6.9.3.
6	Unscrew oil drain plug (3) and collect the spent oil in the container.
7	Clean the components; check the seals and replace if necessary.
8	Re-install and tighten oil drain plug (3).
9	Screw out oil filler plug (1).
10	Move the machine until mark (2) on the hub is horizontal.
11	Fill in new oil up to the level of mark (2).
12	Re-install and tighten oil filler plug (1).
13	Repeat the procedure for the three remaining hubs.
14	Re-check the oil level after 2 service hours.

https://truckmanualshub.com/

6.5.5 Travel Gear

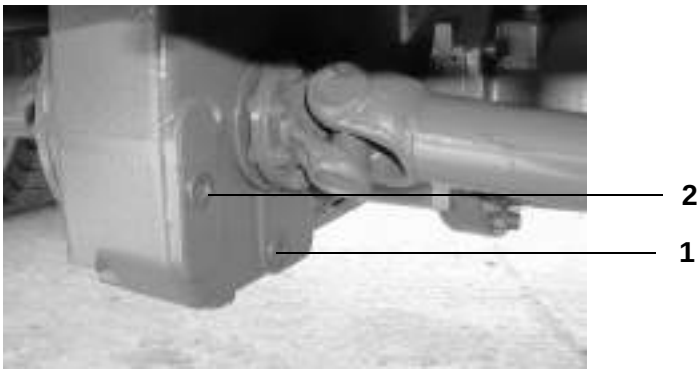

Checking oil level

1	Warm up the machine to operating temperature.
2	Park the machine on level ground.
3	Stop the engine. Wait approx. 10 minutes for the oil to collect in the travel gear.
4	Use a cloth to clean the outside of the travel gear.
5	Unscrew oil filler plug (2). The oil level must reach as far as the bottom of the plug hole; add oil as necessary.
6	Clean the components; check the seal and replace if necessary.
7	Re-install and tighten oil filler plug (2).

Changing oil

1	Warm up the machine to operating temperature.
2	Park the machine on level ground.
3	Stop the engine. Wait approx. 10 minutes for the oil to collect in the travel gear.
4	Use a cloth to clean the outside of the travel gear.
5	Loosen oil filler plug (2) to relieve the pressure.
6	Place a suitable receiving container underneath oil drain plug (1). For refill capacity refer to Section 6.9.3.
7	Unscrew oil drain plug (1) and collect the spent oil in the container.
8	Clean the components; check the seals and replace if necessary.
9	Re-install and tighten oil drain plug (1).

https://truckmanualshub.com/

10	Unscrew oil filler plug (2).
11	Fill in new oil up to the bottom of the filler plug hole.
12	Re-install and tighten oil filler plug (2).
13	Re-check the oil level after 2 service hours.

6.5.6 Differential

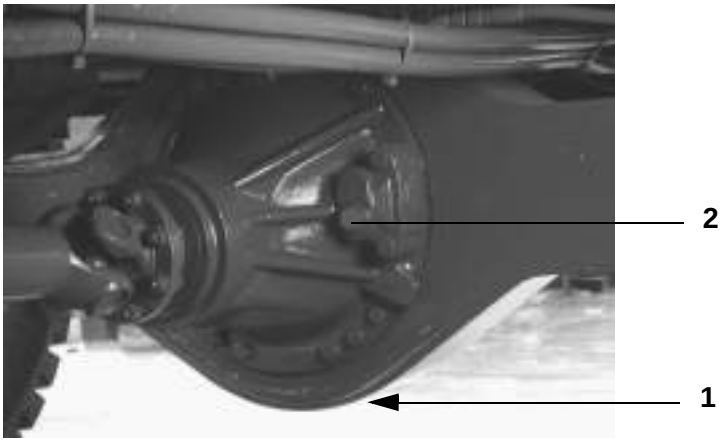

Checking oil level

1	Warm up the machine to operating temperature.
2	Park the machine on level ground.
3	Stop the engine. Wait approx. 10 minutes for the oil to collect in the differential.
4	Use a cloth to clean the outside of the differential.
5	Unscrew oil filler plug (2). The oil level must reach as far as the bottom of the plug hole; add oil as necessary.
6	Clean the components; check the seal and replace if necessary.
7	Re-install and tighten oil filler plug (2).

Changing oil

1	Warm up the machine to operating temperature.
2	Park the machine on level ground.

https://truckmanualshub.com/

3	Stop the engine. Wait approx. 10 minutes for the oil to collect in the differential.
4	Use a cloth to clean the outside of the differential.
5	Loosen oil filler plug (2) to relieve the pressure.
6	Place a suitable receiving container underneath oil drain plug (1). For refill capacity refer to Section 6.9.3.
7	Unscrew oil drain plug (1) and collect the spent oil in the container.
8	Clean the components; check the seals and replace if necessary.
9	Re-install and tighten oil drain plug (1).
10	Unscrew oil filler plug (2).
11	Fill in new oil up to the bottom of the filler plug hole.
12	Re-install and tighten oil filler plug (2).
13	Re-check the oil level after 2 service hours.

https://truckmanualshub.com/

6.6 Slewing Ring

Check the grease

1	Rotate the upper structure 360° counterclockwise starting from travel direction.
2	Rotate the upper structure further in counterclockwise direction until the boom is at right angles to the undercarriage (90° to travel direction.
3	Rotate the upper structure 90° in clockwise direction (boom is beeing set in driving direction):
4	Remove the cover (1).
5	You must see a „peak of grease“ (min. 20mm). Add more grease if necessary.
6	Refit the cover (1).

https://truckmanualshub.com/

Retightening bolts

Retighten fixing bolts with a torque wrench. While doing so relieve the screw connection from any strain from external forces.

Observe the torque!

Notes

- Ensure that you adhere to the number and diameter of fixing bolts.
- Oil the threads and support surfaces of nuts and bolts each week with a light coating of machine oil.
- Pretension bolts anticlockwise carefully to prescribed values. The pretensioning of initially tightened bolts is affected by tensioning further bolts. It is therefore necessary to go round at least twice.
- Ideally tighten bolts over M30 with a hydraulic screw tension cylinder.
- Please contact Sennebogen customer service with any further questions.

Danger

Danger to life!
Corroded and damaged bolts can shear off and cause the upper structure to tilt.

- Do not retighten corroded or damaged bolts. Replace immediately with new bolts.
- Only use genuine Sennebogen replacement parts!

https://truckmanualshub.com/

Service interval

Danger
Danger to life!
Defective live ring screw can cause the upper structure to tip over. For this reason, be sure to observe the following intervals:

- Once a week, tighten the live ring screws with a torque wrench.
- Once a year, have the live ring screws check by an expert.
- Replace the live ring screws at least every 5000 operating hours / every five years, even when they fail to exhibit any safety-related defects.

https://truckmanualshub.com/

6.7 Electrical System

Danger

- Have any work on the electrical system performed by adequately trained qualified electricians only.

6.7.1 Batteries

Danger

- Explosion hazard!
  Smoking and handling of naked flames is prohibited. Take care to avoid sparking in the vicinity of the battery.
- Acid can cause burns!
  Wear safety glasses and gloves.
  Do not tilt the battery. Battery electrolyte can cause burns and must not get into the eyes or come into contact with the skin.
- Do not deposit any tools on the battery.
- Disconnect the battery before welding.
- Mind not to interchange battery posts.
- Dispose of spent batteries as hazardous waste.

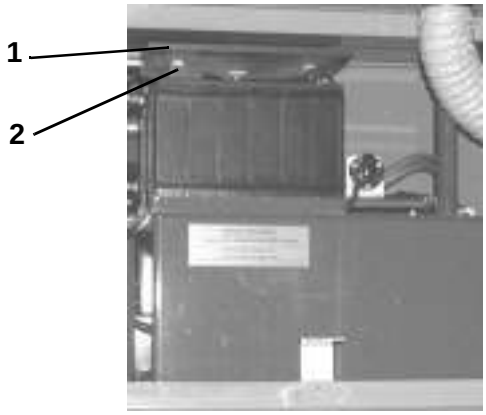

Check the terminals and cable connections of the batteries:

1	Open the left-hand service access door.
2	Remove battery cover (1).
3	Clean the terminals and cable connections of the batteries (2). Verify that they are firmly secured in place and coat them with petroleum jelly.
4	Re-install the battery cover.

https://truckmanualshub.com/

6.7.2 Fuses

Danger
Fire hazard!
Fuses must not be repaired. Always install new fuses of the same ampere rating.

1	Stop the engine.
2	Remove the cover of fuse box (1).
3	Replace the defective fuse.
4	Check the contacts, clean any oxidized contacts.
5	Refit the cover of fuse box (1).

https://truckmanualshub.com/

6.8 Heating System

Cleaning filter element

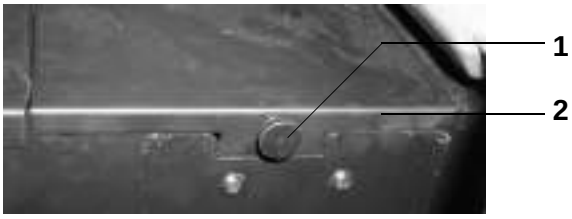

1	Unscrew knurled screws (1) at the back of the operator's seat.
2	Remove cover (2).

3	Take out filter element (3).
4	Tap out the filter element or blow it out carefully by means of compressed air.
5	Re-install the filter element. Make sure you install it in the correct position. Filtered air should be discharged in the direction of travel.

https://truckmanualshub.com/

6.9 Appendix

Safety information

Note the safety informations before you start work.

Warning

- The maintenance operations set out below must only be performed by qualified personnel that has received adequate training and instruction.
- Wearing personnel equipment (e.g. hard hat, hearing protective devices, protective gloves, safety shoes).

6.9.1 Maintenance Schedule

Note

When working in extreme-duty conditions, e.g., at high ambient temperatures, it may be necessary to reduce the intervals.

(* sh = service hours)

Operation	every 10 sh* / daily	every 50 sh* / weekly	once after 250 sh*	every 500 sh* / 3months	every 1000 sh* / 1 year	every 2000 sh* / 2 years	Section
– Perform visual inspection and functional check.	☐	☐	☐	☐	☐	☐	
– Cab - Check the cab support, bolts and screwed connections.	☐	☐	☐	☐	☐	☐	
– All separable connections (screws, bolts, cotter pins, etc.) – verify firm seating.	☐	☐	☐	☐	☐	☐	
– Engine oil level – check. Observe intervals specified in engine manufacturer's manual.	☐	☐	☐	☐	☐	☐	6.3.1
– Coolant level – check; clean cooling fins, if necessary.	☐	☐	☐	☐	☐	☐	6.3.3
– Hydraulic system – check oil level.	☐	☐	☐	☐	☐	☐	6.4.3
– Superfine filter – check service indicator.	☐	☐	☐	☐	☐	☐	6.4.9
– Slewing ring – lubricate.	☐	☐	☐	☐	☐	☐	6.6
– Central lubrication system – check filling level.	☐	☐	☐	☐	☐	☐	
– Hydraulic oil cooler – check and clean.		☐	☐	☐	☐	☐	

https://truckmanualshub.com/

Operation	every 10 sh* / daily	every 50 sh* / weekly	once after 250 sh*	every 500 sh* / 3months	every 1000 sh* / 1 year	every 2000 sh* / 2 years	Section
– Tire inflation pressure – check as necessary.		◻	◻	◻	◻	◻	6.5.2
– Wheel nuts – retighten by means of torque wrench.		◻	◻	◻	◻	◻	6.5.3
– Hub gears – check oil level.		◻	◻	◻	◻	◻	6.5.4
– Differential – check oil level.		◻	◻	◻	◻	◻	6.5.6
– Slewing ring fixing bolts – retighten by means of torque wrench.		◻	◻	◻	◻	◻	6.6
– Battery cable connections and fuses – check.		◻	◻	◻	◻	◻	6.7
– Heating system filter – check.		◻	◻	◻	◻	◻	6.8
– Lubrication points – grease.		◻	◻	◻	◻	◻	6.9.2
– Radiator – clean.		◻	◻	◻	◻	◻	6.3.3
– Hydraulic accumulator precharge pressure - have it checked by a hydraulics specialist [1].			◻[1]	◻[1]	◻[1]	◻[1]	6.4
[1] After 250 sh*/6 weeks and after 500 sh*/3 months; then every 1000 sh*/1 year							
– Observe engine intervals.			◻	◻	◻	◻	
– All screwed/bolted connections – verify firm seating.			◻	◻	◻	◻	
– Travel gear – check oil level.			◻	◻	◻	◻	6.5.5
– Antifreeze content – check.			◻	◻	◻	◻	6.3.3
– Filter element of return flow filter – replace [2].			◻			◻	6.4.5
– Leakage oil filter – replace filter element.			◻			◻	6.4.7
– Pilot control filter – replace filter element.			◻			◻	6.4.6
– Hub gears – change oil [2].			◻[2]		◻[2]	◻	6.5.4
– Travel gear – change oil [2].			◻[2]		◻[2]	◻	6.5.5
– Differential – change oil [2].			◻[2]		◻[2]	◻	6.5.6
[2] Once after 250 sh*/6 weeks; then every 1000 sh*/1 year							

https://truckmanualshub.com/

Operation	**every 10 sh* / daily**	**every 50 sh* / weekly**	**once after 250 sh***	**every 500 sh* / 3months**	**every 1000 sh* / 1 year**	**every 2000 sh* / 2 years**	**Section**
– Slewing ring fixing bolts - check by an expert.					☐	☐	
– Coolant – change.					☐	☐	6.3.3
– Primary and secondary filter elements of air filter – replace.					☐	☐	6.3.2
– Hydraulic system – change oil.						☐	6.4.4
– Screw cap with breather filter on hydraulic tank – replace.						☐	6.4.8
– Slewing ring fixing bolts - change [3)]						☐[3)]	6.6

[3)] every 5000 sh* / every 5 years

https://truckmanualshub.com/

6.9.2 Schedule of Lubrication Points

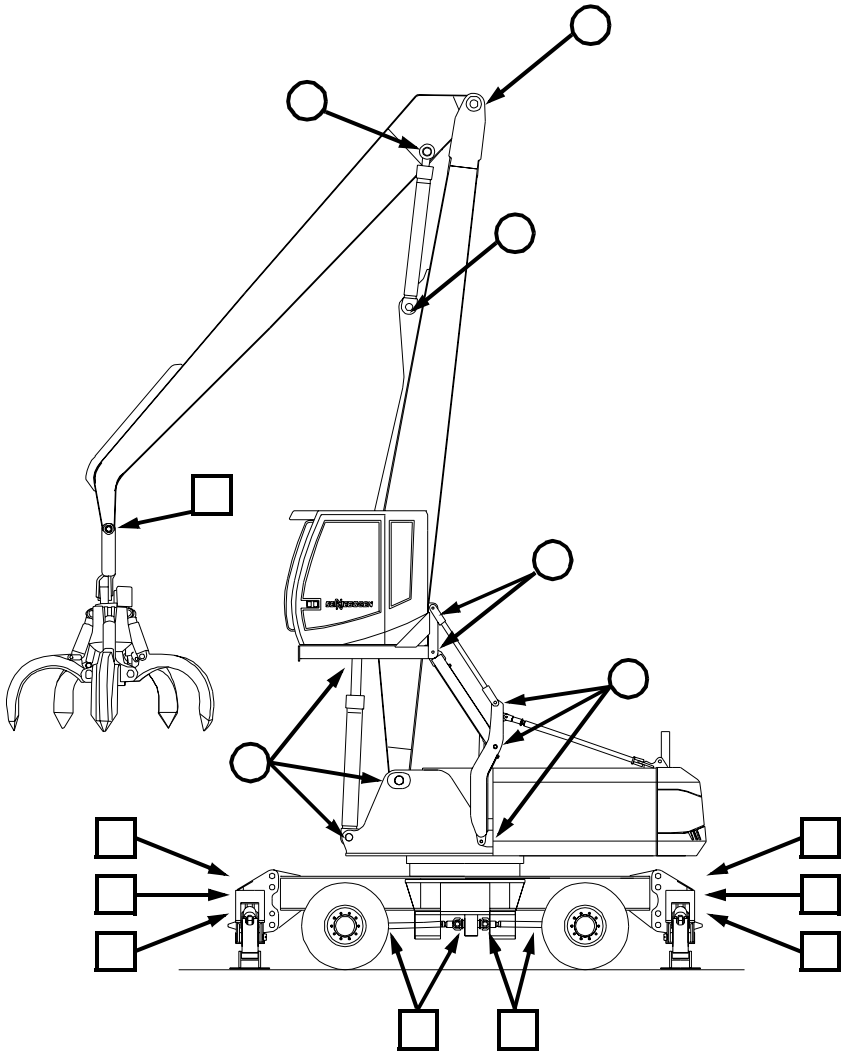

Lubrication effected via:

○ Central lubrication system (option)
In the standard version without the optional central lubrication system, the lubrication points are provided with grease fittings.

□ Grease fittings
The grease fittings have been provided with a red protective cover.

https://truckmanualshub.com/

6.9.3 Refill Capacities

The capacities shown below are approximate values. What matters is the filling level indicated on the compartment concerned.

Assembly or Compartment	Quantity
Engine	refer to manufacturer's manual
Fuel tank	about 500 l
Hydraulic tank	about 300 l
Overall hydraulic system	about 360 l
Travel gear	about 3.0 l
Differential	
● front	about 23 l
● rear	about 17.5 l
Hub gears	about 1.0 l
Slewing ring gearing	as required
Central lubrication system	as required
Lubrication points	as required

https://truckmanualshub.com/

6.9.4 Tightening Torques for Bolts

Note
Exceptions to the specifications in the table below may apply in the case of some mounting bolts on the undercarriage. Please note the information provided in the relevant sections.

Strength grade 8.8

Standard Thread		Fine Thread	
Bolt	Tightening torque M_A [Nm]	Bolt	Tightening torque M_A [Nm]
M4	2.7	M8x1	24
M5	5.4	M10x1	50
M6	9.3	M10x1.25	47
M8	23	M12x1.25	84
M10	45	M12x1.5	81
M12	77	M14x1.5	135
M14	125	M16x1.5	205
M16	190	M18x1.5	305
M18	275	M20x1.5	430
M20	385	M22x1.5	580
M22	530	M24x2	720
M24	660	M27x2	1050
M27	980	M30x2	1450
M30	1350		
M33	1850		
M36	2350		

https://truckmanualshub.com/

Strength grade 10.9

Standard Thread		Fine Thread	
Bolt	Tightening torque M_A [Nm]	Bolt	Tightening torque M_A [Nm]
M4	4.0	M8x1	36
M5	7.9	M10x1	73
M6	14	M10x1.25	69
M8	33	M12x1.25	125
M10	66	M12x1.5	120
M12	115	M14x1.5	195
M14	180	M16x1.5	300
M16	280	M18x1.5	435
M18	390	M20x1.5	610
M20	550	M22x1.5	830
M22	750	M24x2	1050
M24	950	M27x2	1500
M27	1400	M30x2	2100
M30	1900		
M33	2600		
M36	3300		

https://truckmanualshub.com/

Strength grade 12.9

Standard Thread		Fine Thread	
Bolt	Tightening torque M_A [Nm]	Bolt	Tightening torque M_A [Nm]
M4	4.7	M8x1	42
M5	9.2	M10x1	86
M6	16	M10x1.25	81
M8	39	M12x1.25	145
M10	77	M12x1.5	140
M12	135	M14x1.5	230
M14	210	M16x1.5	350
M16	330	M18x1.5	510
M18	455	M20x1.5	710
M20	640	M22x1.5	960
M22	880	M24x2	1200
M24	1100	M27x2	1750
M27	1650	M30x2	2450
M30	2200		
M33	3000		
M36	3900		

https://truckmanualshub.com/

7 Setting up works

Note
The upcoming setting up works depend on the chosen work tools. Please not with the operating instructions from the tools manufacturer.

https://truckmanualshub.com/

https://truckmanualshub.com/

8 Transport

Preliminary operations

Transport the machine by means of a flatbed trailer. Be sure to perform the following preliminary operations:

- Select an appropriate vehicle for transport.
  Observe the machine dimensions and weights as specified in Section 8.2.1.
- Clean the machine.
- Fold the boom and the stick into the transport position.
- Lock the upper structure and the undercarriage as specified in Section 8.3.
- Remove working attachments and tools, if any.

8.1 Safety Information

Warning

- Any loading and transport work must only be performed by duly authorized qualified personnel observing section 48 of VBG 40 (German accident prevention regulations for earthmoving machinery) and section 22 of StVO (German highway code).
- Observe the applicable cargo securing rules and regulations. Transport of the machine and of the accessories is the responsibility of the respective carrier as a general principle.
- During loading and transport, secure the machine and its working equipment against any accidental movement.
- Remove mud, snow and ice from the undercarriage of the machine sufficiently to allow the use of ramps without the risk of slippage.
- With worked out pylon do not swing the upper structure.
- Provide ramps of flatbed trailers with wood blocking.
- Before setting off, investigate the condition of the travel route.
- For transport of the machine, use only the lashing, tie-down and lifting points provided for the purpose.
- Take care to ensure that the machine does not constitute a source of danger for other road users.
- Wearing personnel equipment (e.g. hard hat, hearing protective devices, protective gloves, safety shoes).

https://truckmanualshub.com/

8.2 Dimensions and Weights

8.2.1 Shipping Dimensions

Maschine

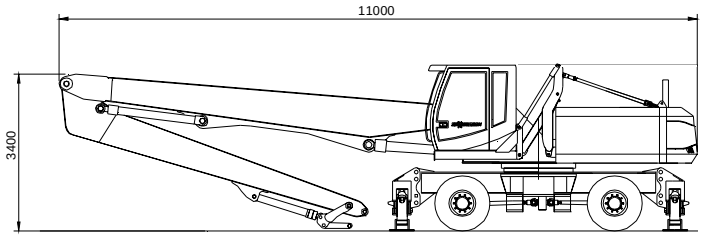

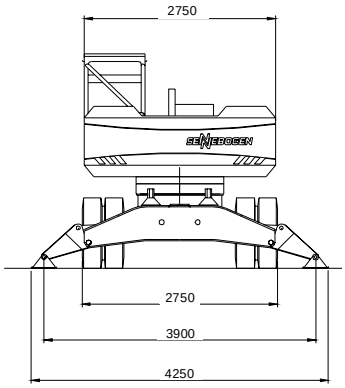

https://truckmanualshub.com/

8.2.2 Weights

Note
Machine weight may differ from the specifications below if any optional features have been added.

Machine	Weight	approx. 30 tonnes

Weight includes 122 kW (165 hp) diesel engine, loading boom and counterweight.

https://truckmanualshub.com/

8.3 Locking the Upper Structure

1	Position the upper structure in the direction of travel.
2	Apply the slewing gear brake.

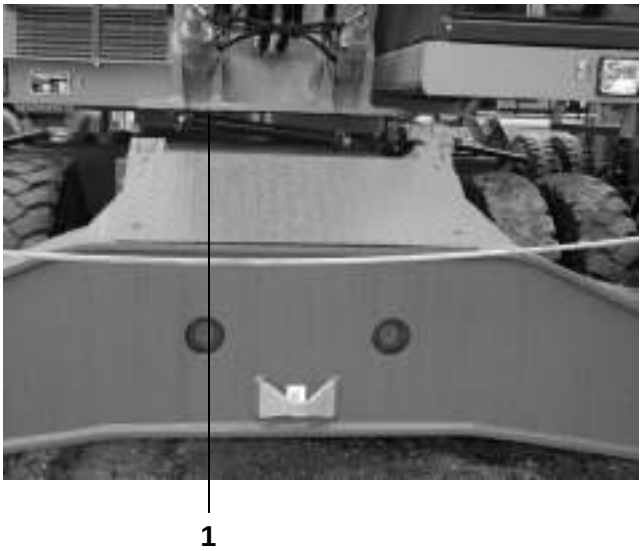

3	Pin and lock the locking link (1) at the undercarriage and at the upper structure.

https://truckmanualshub.com/

8.4 Lifting the Machine

Safety information

Note the safety information before you start work.

Danger

- To sling the machine, use only the lifting points provided for the purpose. The lifting points are marked with green paint and identified by a green load hook symbol.
- Take care to ensure that the sling devices are of adequate load capacity and undamaged.
- Mind the danger area!
  No persons are allowed at, on or underneath the machine.

Procedure

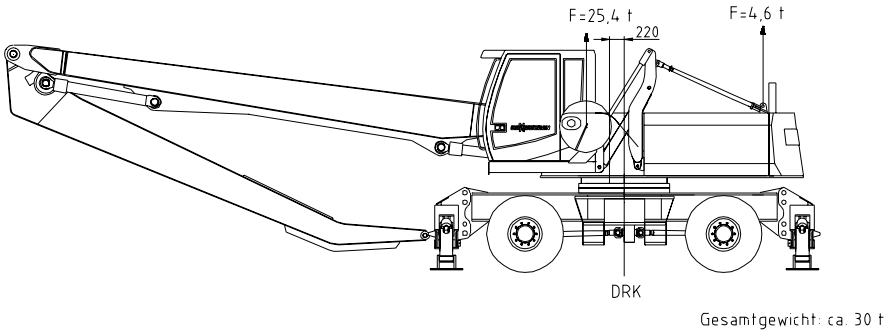

1	Select an appropriate lifting crane and proper rated sling devices. Observe the machine weight and center of gravity.
2	Fasten the sling devices to the lifting points.
3	Carefully lift the machine.

Danger

People must keep clear of the area under a suspended load!

https://truckmanualshub.com/

8.5 Lashing and Tying Down the Machine

Caution

- To lash the machine, use the tie-down points (1) provided for the purpose. The tie-down points are marked with green paint and located on the undercarriage.
- Take care to ensure that the sling devices are of adequate load capacity and undamaged.
- In the event of an additional securing device being required, take care to avoid the machine getting damaged.
- Transport of the machine and of the accessories is the responsibility of the respective carrier as a general principle.

1

https://truckmanualshub.com/

9 Troubleshooting

Warning

- Be sure to observe Chapter 1 SAFETY.
- The maintenance, inspection and troubleshooting personnel must have the appropriate qualification for these operations.
- In case of operations not described in detail, consult the Sennebogen service department.

9.1 Engine

Engine fails to start

Cause	Remedy
Battery capacity inadequate	– Check electrolyte level of batteries. – Recharge or replace batteries. – Use auxiliary battery to start the machine.
Starter interlock not active	– Unlock travel pedal.
Fuel tank empty	– Refuel the machine.

Loss of engine power

Cause	Remedy
Suction resistance excessive	– Replace filter element of water separator.

Machine fails to move

Cause	Remedy
Parking brake applied	– Release parking brake.
Transmission defective	– Have the fault corrected.

Oil or fuel leaks at the engine

Cause	Remedy
Loose hose connections	– Tighten hose connections.
Hoses or seals damaged	– Replace hoses or seals.

Note
You should also observe the information provided in the engine manufacturer's operation manual.

https://truckmanualshub.com/

9.2 Hydraulic System

Oil leaks at the hydraulic system

Cause	Remedy
Loose hose connections	– Tighten hose connections.
Hoses or seals damaged	– Replace hoses or seals.

Hydraulic pump fails to operate

Cause	Remedy
Fault in pump circuit	– Have the fault investigated and corrected by a hydraulics specialist.

No functions, or malfunctioning, of the working attachment

Cause	Remedy
Hydraulic oil level too low	– Check hydraulic oil level. – Add hydraulic oil as necessary.
Leaks in the hydraulic system	– Check the working cylinders, connections, fittings and hoses for leaks. – Have the fault corrected by a hydraulics specialist.
Fault in one of the attachment operation circuits	– Have the fault corrected by a hydraulics specialist.

Working cylinder movement produces noises

Cause	Remedy
Lack of lubricant film on cylinder piston rod	– Have cylinder repaired by a hydraulics specialist.

https://truckmanualshub.com/

No or inadequate output of the hydraulic system

Cause	Remedy
Loose hose connections	– Tighten hose connections.
Hoses or seals damaged	– Replace hoses or seals.
Relief valve opens prematurely	– Have the fault corrected by a hydraulics specialist.
Hydraulic pump worn or defective	– Have pump replaced by a hydraulics specialist.

Noises at the hydraulic system

Cause	Remedy
Hydraulic pump sucks in air	– Have the fault corrected by a hydraulics specialist.
Oil delivery of hydraulic pump is inadequate	– Check hydraulic oil level. – Add hydraulic oil as necessary.
Relief valve knocking	– Have the fault corrected by a hydraulics specialist.

https://truckmanualshub.com/

9.3 Sennebogen Diagnostic System

9.3.1 Bank of keys with LEDs

LED flashes, buzzer sounds

Cause	Remedy
Hydraulic oil temperature excessive (>84°C)	– Operate engine at no load until the hydraulic oil has cooled down.
Cooling fins on the hydraulic oil cooler dirty	– Clean cooling fins on the oil cooler.
Hydraulic oil level too low	– Check oil level as specified in Section 6.4.2. – Add hydraulic oil as necessary.

Note
When the hydraulic oil temperature rises to more than +94 °C, the temperature reading on the display flashes in addition.

LED flashes, continuous alarm sounds

Cause	Remedy
Fuel level in the tank too low	– Refuel the machine as specified in Section 5.6.10.

LED flashes, buzzer sounds

Cause	Remedy
Engine overheated	– Idle the engine.
Cooling fins on the engine oil cooler dirty	– Clean cooling fins on the oil cooler.
Fan drive loose or defective	– Tighten fan drive, replace if necessary.
Coolant level too low	– Add coolant as specified in Section 6.3.3.

Note
If the coolant temperature continues to rise, the temperature reading on the display flashes in addition, and a continuous alarm sounds.

https://truckmanualshub.com/

LED flashes, buzzer sounds	Cause	Remedy
	Engine oil pressure too low (<1.3 bar)	– Stop the engine immediately. – Check the engine oil level as specified in Section 6.3.1. – Add engine oil as necessary. – If fault continues to occur, inform the Sennebogen service department accordingly.

Note
When the oil pressure falls below 1.0 bar, the pressure reading on the display flashes in addition, and a continuous alarm sounds.

https://truckmanualshub.com/

9.4 Heating System

No or inadequate heater output

Cause	Remedy
Water inlet temperature too low	– Operate engine to warm it up. – Replace thermostat (with air conditioner).
Thermostat on vehicle defective	– Replace vehicle thermostat.
Water valve fails to open	– Check valve and valve control; replace as necessary. Mind the direction of flow.
Heat exchanger louvers dirty	– Clean heat exchanger.
Filter foul/blocked	– Clean filter; replace if necessary.
No air flow	– See below.

No air flow

Cause	Remedy
Fuse failed	– Replace fuse.
Power supply interrupted	– Check wiring for loose contacts or open circuits.
Blower motor defective	– Have blower motor replaced.
Blower switch defective	– Check switch, replace if necessary.
Resistor defective	– Have resistor replaced.

Heating cannot be shut off

Cause	Remedy
Bowden cable for water valve maladjusted	– Re-adjust Bowden cable.
Heater valve not mounted properly	– Check direction of flow at the valve; where necessary, exchange inlet/return flow.
Control and/or Bowden cable defective	– Replace control or Bowden cable respectively.

https://truckmanualshub.com/

9.5 Air Conditioner (Optional)

Cooling efficiency inadequate

Cause	Remedy
Fuse failed	– Replace fuse.
Power supply interrupted	– Check wiring for loose contacts or open circuits.
Pressure switch defective	– Have pressure switch replaced.
Refrigerant line broken	– Have line replaced.
Expansion valve sticking	– Have customer service replace the valve.
Compressor clutch slipping	– Have customer service replace the clutch.
Air filter foul/blocked	– Clean air filter.

Air conditioner cooling intermittently

Cause	Remedy
Compressor clutch slipping	– Have customer service replace the clutch.
Temperature controller defective	– Replace temperature controller.
System iced	– Have air conditioner checked by the customer service.
Blower switch defective	– Check switch, replace if necessary.

Air conditioner extremely noisy

Cause	Remedy
Compressor clutch slipping	– Have customer service replace the clutch.
V-belts loose or worn	– Increase V-belt tension or replace V-belts.
System overcharged	– Have refrigerant extracted by the customer service.
Lack of refrigerant in the system	– Have customer service check the system for leaks. – Have system charged with refrigerant.

https://truckmanualshub.com/

9.6 Undercarriage

Oil leaks at differential, wheel-hub or travel gearboxes

Cause	Remedy
End plugs loose	– Tighten end plugs.
Seals damaged	– Replace seals.

Oil leaks at swing gear drive

Cause	Remedy
Connections loose	– Tighten connections.

Swivel joint leaking

Cause	Remedy
Seals damaged	– Replace seals.
Lines loose	– Retighten fixing bolts.

Noises in swing mechanism

Cause	Remedy
Inadequate lubrication on ring gear	– Lubricate ring gear as specified in the lubrication schedule.

9.7 Cab

Cab is swinging very strong

Cause	Remedy
Cab frame or cab frame-support is damaged	– All bolted/screwed connections at the cab support and cab frame-support must be checked for damages. – Renew all damaged parts immediatly by qualified personnel that has received adequate training and instruction.

https://truckmanualshub.com/

10 Appendix

10.1 Index

10.2 Lubrication-Table

10.3 Additional Documentation

10.3.1 Engine

10.3.2 Operator’s Seat

10.3.3 Magnet system

10.3.4 Central Lubrication System

10.3.5 Cleaning the Cooler

https://truckmanualshub.com/

https://truckmanualshub.com/

A
Abuse 1-3
Adding hydraulic oil 6-16
Adjusting stick limiting stops 5-29
Adjusting time of day 5-15
Ambient temperature 3-2
Automatic idling 5-22
Automatic idling system 5-22

B
Bank of keys 5-14
Belt drives 6-12
Biological oils 6-5
Bolt strength grades 6-42
Boom stop 5-27

C
Cab
Elevate 5-4
Lower 5-5
Checking hydraulic oil level 6-16
Cleaning hydraulic cylinders 6-13
Crushing hazards 1-4

D
Danger area 1-4
Description
Wind 3-5
Display (SDS) 5-13
Disposal 1-19

E
Emergency exit 5-2
Emergency lowering 5-6
Emergency lowering system
Cab mounted 5-6
Storage compartment mounted 5-7
Employment in foreign countries 1-14
Engine
Changing oil 6-8
Checking oil level 6-8
Engine speed control 5-20
Extending outriggers 5-32

F
Fire extinguisher 1-14
First aid kit 1-14

G
Gauge fittings 6-15

H
Hand signals 1-19
High voltage contact 1-6
Hydraulic fittings 6-13

I
Inadmissible operating practices 1-13
Indicator lights 5-18
Inspection by competent person 1-12
International rules and regulations 1-1

J
Jump starting 4-6

L
LEDs 5-14
Lifting points 8-5
Loads
Lift 5-36
Lower 5-36
Lock - Oscillating axle 5-22

M
Machine
Stabilize 5-32
Travel 5-31
Maximum tolerable wind 3-2
Modification of the machine 1-13
Multiple disc brake 5-35

N
National rules and regulations 1-1
Noise protection 1-13

O
Oil analysis 6-5
Oil filler neck 6-16
Operator’s work station 1-3
Oscillating axle lock-up 5-22
Overhead lines 1-6
Overload warning system 1-15, 5-21
Overriding stick-in limiting stop 5-28

P
Permanent sound pressure level 1-13
Personal protective equipment 1-5
Personnel qualifications 1-12
Personnel selection 1-12
Preparing to operate
Checklist 4-2
Pressure cylinders 6-13
Protection of the environment 1-19
Pull-ring - Emergency exit 5-2

Q
Qualifications of personnel 1-6

R
Release (cab door) 5-2
Relieving hydraulic system pressure 6-15
Replacing oil filter 6-8
Resetting daily service hour meter 5-15
Retracting outriggers 5-33

S
Safety alert symbol 1-2
Safety clearance 1-4
Safety clearance to overhead lines 1-6
Safety information 1-4
Safety lever 2-5, 5-11
Sicherheitsabstand 1-6
Signal word 1-2
Slewing gear brake 5-35
Stability 1-5
Stabilizing the machine 5-32
Stick-in limiting stop 5-28
Adjust 5-29

https://truckmanualshub.com/

Stick-out limiting stop 5-28
Adjust 5-30
Swinging upper structure 5-34

T
Target group 1-3
Tie-down point 8-6
Tightening torque 6-42
Tipping hazard 5-21
Transportmaße 8-2
Traveling the machine 5-31
Traveling with suspended load 5-31

U
Überlast-Warneinrichtung 2-3
Upper structure swing 5-34
Use as intended 1-3

W
Warm-up period 4-7
Warning lights 5-18
Warning system - Overload 5-21
Wind force 3-5
Wind speed 3-5