https://truckmanualshub.com/

PARTS CATALOG

55V4

SERIAL No. WZ010001 - WZ019999

https://truckmanualshub.com/

[Memo]

https://truckmanualshub.com/

MODEL : 55V4

SERIAL NO. : WZ010001 - WZ019999

CONTENTS

DESCRIPTION	SHEET No.	PAGE
0 LIST OF CONSUMABLES		
RUNNING STORES	0-0	1
1 LOWER MACHINE		
LOWER MACHINE ASS'Y	1-1	4
CRAWLER SHOE ASS'Y	1-2	7
CRAWLER SHOE ADJ. DEVICE	1-3	9
FRONT IDLER ASS'Y	1-4	11
LOWER ROLLER ASS'Y	1-5	13
UPPER ROLLER ASS'Y	1-6	15
LOWER TRAVEL PIPING ASS'Y	1-7	17
2 TURNTABLE		
TURNTABLE & SWING BEARING ASS'Y	2-1	19
3 SWING DRIVE DEVICE		
SWING DRIVE DEVICE	3-1	21
4 HYDRAULIC PIPING		
RETURN & SUCTION PIPING ASS'Y	4-1	23
SWING & TRAVEL PIPING ASS'Y	4-2	26
PUMP DISCHARGE & BOOM SWING PIPING ASS'Y	4-3	29
CONTROL PIPING ASS'Y	4-4	31
CONTROL PIPING ASS'Y (FOR A-D, A.B.G CHANGE)	4-4[A]	34
CONTROL PIPING ASS'Y (FOR A, F CHANGE)	4-4[B]	38
5 HYDRAULIC INSTRUMENT		
TRAVEL MOTOR ASS'Y	5-1	42
SWING MOTOR ASS'Y	5-2	46
ROTARY JOINT ASS'Y	5-3	49
CONTROL VALVE ASS'Y	5-4	51
REMOTE CONTROL VALVE ASS'Y	5-5	55
HYDRAULIC OIL TANK ASS'Y	5-6	57
OIL PUMP ASS'Y	5-7	59
BOOM CYLINDER ASS'Y	5-8	61
ARM CYLINDER ASS'Y	5-9	63
BUCKET CYLINDER ASS'Y	5-10	65

https://truckmanualshub.com/

MODEL : 55V4

SERIAL NO. : WZ010001 - WZ019999

CONTENTS

DESCRIPTION	SHEET No.	PAGE
BOOM SWING CYLINDER ASS'Y	5-11	67
BLADE CYLINDER ASS'Y	5-12	69
PILOT VALVE ASS'Y (TRAVEL)	5-13	71
PILOT VALVE ASS'Y	5-14	73
MULTIPLE VALVE ASS'Y (FOR A-D CHANGE)	5-15	75
MULTIPLE VALVE ASS'Y (FOR A, F CHANGE)	5-15[B]	77
6 OPERATING CONTROLS		
TRAVEL LEVER ASS'Y	6-1	79
CONTROL LEVER ASS'Y	6-2	81
BLADE & BOOM SWING CONTROL ASS'Y	6-3	84
ENGINE THROTTLE ASS'Y	6-4	87
7 POWER UNIT		
ENGINE & ACCESSOORIES	7-1	89
AIR CLEANER & MUFFLER ASS'Y	7-2	92
OIL PUMP DRIVE DEVICE	7-3	95
FUEL TANK & PIPING ASS'Y	7-4	97
8 CAB & RELATED PARTS		
COVER ASS'Y (1)	8-1	100
COVER ASS'Y (2)	8-2	103
NOISE ABSORBENT ASS'Y	8-3	106
CANOPY ASS'Y (FOR TOPS/ROPS)	8-4	110
CANOPY ASS'Y	8-4[A]	113
OPERATOR SEAT & MAT ASS'Y	8-5	115
COUNTER WEIGHT ASS'Y	8-6	117
NAME PLATE ASS'Y (FOR JAPANESE)	8-7	119
NAME PLATE ASS'Y (FOR ENGLISH)	8-7[A]	121
NAME PLATE ASS'Y (FOR DUTCH)	8-7[B]	123
NAME PLATE ASS'Y (FOR FRENCH)	8-7[C]	125
NAME PLATE ASS'Y(FOR ITALIAN)	8-7[D]	127
NAME PLATE ASS'Y(FOR GERMAN)	8-7[E]	129
NAME PLATE ASS'Y(FOR DANISH)	8-7[F]	131
NAME PLATE ASS'Y (FOR SPANISH)	8-7[G]	133
9 ELECTRIC SYSTEM		
ELECTRIC SYSTEM	9-1	135

https://truckmanualshub.com/

MODEL : 55V4

SERIAL NO. : WZ010001 - WZ019999

CONTENTS

DESCRIPTION	SHEET No.	PAGE
INSTRUMENT PANEL ASS'Y	9-2	138
10 TOOLS & ACCESSORIES		
TOOLS & ACCESSORIES	10-1	142
11 HOE ATTACHMENT		
HOE ATTACHMENT ASS'Y	11-1	145
BOOM SWING ASS'Y	11-2	147
HOE BUCKET ASS'Y	11-3	149
HOE ATTACHMENT PIPING ASS'Y	11-4	151
12 BLADE ATTACHMENT		
BLADE ATTACHMENT ASS'Y	12-1	153
BLADE PIPING ASS'Y	12-2	155
15 OPTION SPECIFICATION		
FIRST SPARE PIPING ASS'Y	15-1	157
SECOND SPARE PIPING ASS'Y	15-2	160
THIRD SPARE PIPING ASS'Y	15-3	163
ACCUMULATOR ASS'Y	15-4	165
OPERATOR ROOM ASS'Y (1)	15-5	167
OPERATOR ROOM ASS'Y (2)	15-6	169
OPERATOR ROOM ASS'Y (3)	15-7	172
OPERATOR ROOM ASS'Y (4)	15-8	175
CAR HEATER ASS'Y	15-9	178
NAME PLATE ASS'Y (FOR JAPANESE)	15-10	181
NAME PLATE ASS'Y(FOR ENGLISH)	15-10[A]	183
NAME PLATE ASS'Y (FOR DUTCH)	15-10[B]	185
NAME PLATE ASS'Y (FOR FRENCH)	15-10[C]	187
NAME PLATE ASS'Y (FOR ITALIAN)	15-10[D]	189
NAME PLATE ASS'Y (FOR GERMAN)	15-10[E]	191
NAME PLATE ASS'Y (FOR DANISH)	15-10[F]	193
NAME PLATE ASS'Y (FOR SPANISH)	15-10[G]	195
MIRROR ASS'Y	15-11	197
TRAVEL ALARM DEVICE	15-12	199
IMMOBILIZER ASS'Y	15-13	201
LIGHT ASS'Y	15-14	203
AIR CONDITIONER ASS'Y (1)	15-15	205

https://truckmanualshub.com/

MODEL : 55V4

SERIAL NO. : WZ010001 - WZ019999

CONTENTS

DESCRIPTION	SHEET No.	PAGE
AIR CONDITIONER ASS'Y (2)	15-16	207
AIR CONDITIONER PIPING ASS'Y	15-17	209
16 CRANE SPECIFICATION		
HYDRAULIC PIPING ASS'Y	16-1	211
HOLDING VALVE ASS'Y	16-2	213
HOLDING VALVE	16-3	215
HOOK BLOCK ASS'Y	16-4	217
ANGLE DETECTOR	16-5	219
ELECTRIC SYSTEM	16-6	221
CONTROLLER ASS'Y	16-7	223
NAME PLATE ASS'Y	16-8	225

https://truckmanualshub.com/

[Memo]

IHI

https://truckmanualshub.com/

LIST OF CONSUMABLES

消耗品リスト

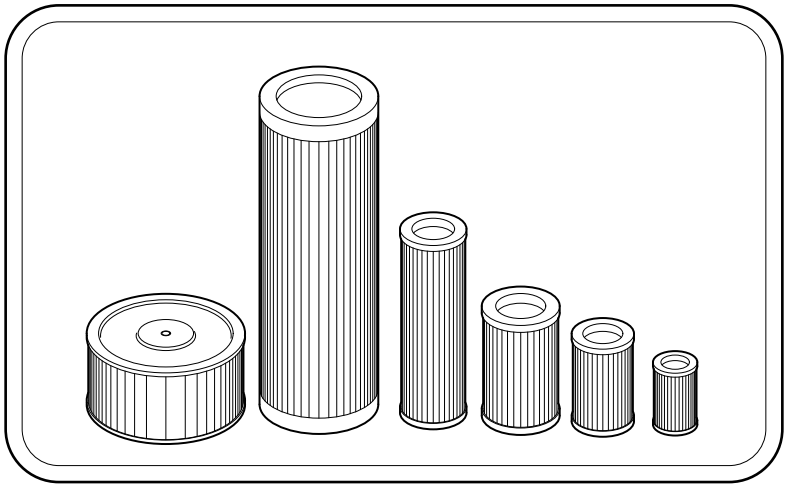

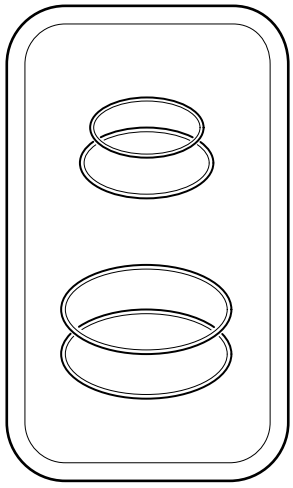

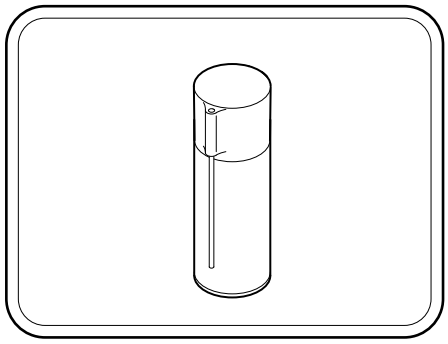

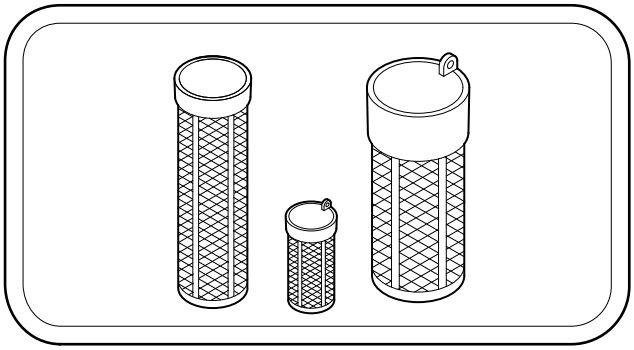

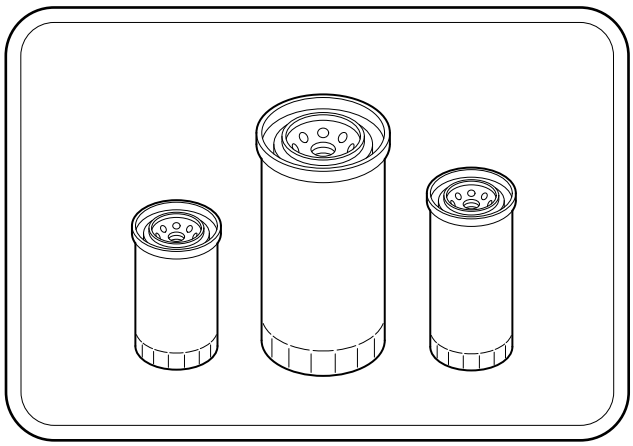

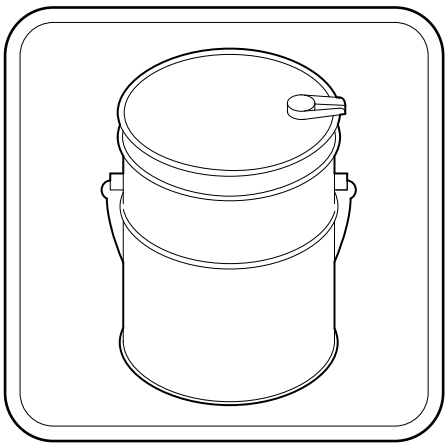

SHALL-000000-1

https://truckmanualshub.com/

KEY No.	SUP.	PART No.	DESCRIPTION	Q'TY	CHAN.	SERIAL No.	REMARKS
			RUNNING STORES LIST				
1		0753 265 UA	Vaive, Check (Grease Up)	1		WY010001-	Sh. No. 1-3
2		0759 106 UA	Strainer, Suction	1		WY010001-	Sh. No. 5-6
3		0755 142 03	Cartridge, Return Filter	1		WY010001-	Sh. No. 5-6
4		0775 551 93	Hose, Radiator	1		WY010001-	Sh. No. 7-1
5		0775 551 95	Hose, Radiator	1		WY010001-	Sh. No. 7-1
6		0745 265 08	Element, Air Cleaner	1		WY010001-	Sh. No. 7-2
7		0745 265 09	Element, Air Cleaner(Inner)	1		WY010001-	Sh. No. 7-2
8		0857 914 11	Element, Water Sedimenter	1		WY010001-	Sh. No. 7-4
9		0729 910 73	Cap, Fuel	1		WY010001-	Sh. No. 7-4
10		0820 215 10	Relay, Flip Flop	1		WY010001-	Sh. No. 9-1
11		0820 215 11	Relay, Glow	1		WY010001-	Sh. No. 9-1
12		0858 306 03	Switch Ass'y, Starter	1		WY010001-	Sh. No. 9-2
13		0820 215 07	Relay	4		WY010001-	Sh. No. 9-2
14		D013 408 00	Pin, Bucket	2		WY010001-	Sh. No. 11-1
15		4511 501 01	Ring, O (For Bucket)	4		WY010001-	Sh. No. 11-1
16		0650 002 04	Tooth, Bucket	AR		WY010001-	18S
17		0650 003 03	Pin, Lock	AR		WY010001-	18-20M-PN
18		0650 004 02	Pin, Rubber	AR		WY010001-	18-20M-LK
19		4123 040 00	Coutter, Side (R.H.)	1		WY010001-	Sh. No. 11-3
20		4123 041 00	Coutter, Side (L.H.)	1		WY010001-	Sh. No. 11-3
21		0555 140 40	Bolt, Treatment	6		WY010001-	Sh. No. 11-3
22		0585 140 00	Nut, Treatment	6		WY010001-	Sh. No. 11-3
23		D006 051 00	Washer, Treatment	6		WY010001-	Sh. No. 11-3
			SEAL KIT				
24		0713 431 91	Rotary Joint	1		WY010001-	Sh. No. 5-3
25		0782 440 93	Boom Cylinder (Head Side)	1		WY010001-	Sh. No. 5-8
26		0782 438 93	Arm Cylinder (Head Side)	1		WY010001-	Sh. No. 5-9
27		0782 396 91	Bucket Cylinder (Head Side)	1		WY010001-	Sh. No. 5-10
28		0782 380 91	Boom Swing Cylinder (Head Side)	1		WY010001-	Sh. No. 5-11
29		0782 608 91	Blade Cylinder (Head Side)	1		WY010001-	Sh. No. 5-12
			ENGINE PARTS(V2403-M-DI-E3B-BHIH1)				
30		K15221 4317 0	Cartridge, Fuel Filter	1		WY010001-	Sh. No. 7-4
31		KHH164 3243 0	Filter, Oil	1		WY010001-	Engine P/C
32		KR1401 5135 2	Pump, Fuel	1		WY010001-	Sh. No. 7-4
33		K1K574 6022 0	Relay	1		WY010001-	Engine P/C
34		K1K533 6566 0	Controller	1		WY010001-	Engine P/C
35		K1G382 9701 0	Belt, V	1		WY010001-	Engine P/C
36		K1G924 7301 0	Thermostat	1		WY010001-	Engine P/C
37		K1A021 6001 7	Solenoid, Stop	1		WY010001-	Engine P/C
38		K15841 3901 0	Switch, Oil Pressure	1		WY010001-	Engine P/C
39		K1J002 8304 0	Sensor, Thermo	1		WY010001-	Engine P/C
			＊＊＊＊＊				
40		5988 009 00	＊＊＊＊＊	1		WY010001-	400g × 20
41		5988 004 06	＊＊＊＊＊	1		WY010001-	スプレー
41-1		5988 004 09	＊＊＊＊＊	1		WY010001-	4k 缶
42		5988 004 32	＊＊＊＊＊	1		WY010001-	スプレー
42-1		5988 004 33	＊＊＊＊＊	1		WY010001-	4k 缶
43		ZG10100	＊＊＊＊＊	1		WY010001-	38種-890ヶ

0

https://truckmanualshub.com/

KEY No.	SUP.	PART No.	DESCRIPTION	Q'TY	CHAN.	SERIAL No.	REMARKS
44		5988 022 01	＊＊＊＊＊	1		WY010001-	18S= 1セット20ヶ
45		ZG00451	＊＊＊＊＊	1		WY010001-	1セット10枚
45-1		ZG00452	＊＊＊＊＊	1		WY010001-	1セット10枚
45-2		ZG00453	＊＊＊＊＊	1		WY010001-	1セット10枚
46		ZG00501	＊＊＊＊＊	1		WY010001-	1セット10枚
46-1		ZG00502	＊＊＊＊＊	1		WY010001-	1セット10枚
46-2		ZG00503	＊＊＊＊＊	1		WY010001-	1セット10枚

0

https://truckmanualshub.com/

[Memo]

https://truckmanualshub.com/

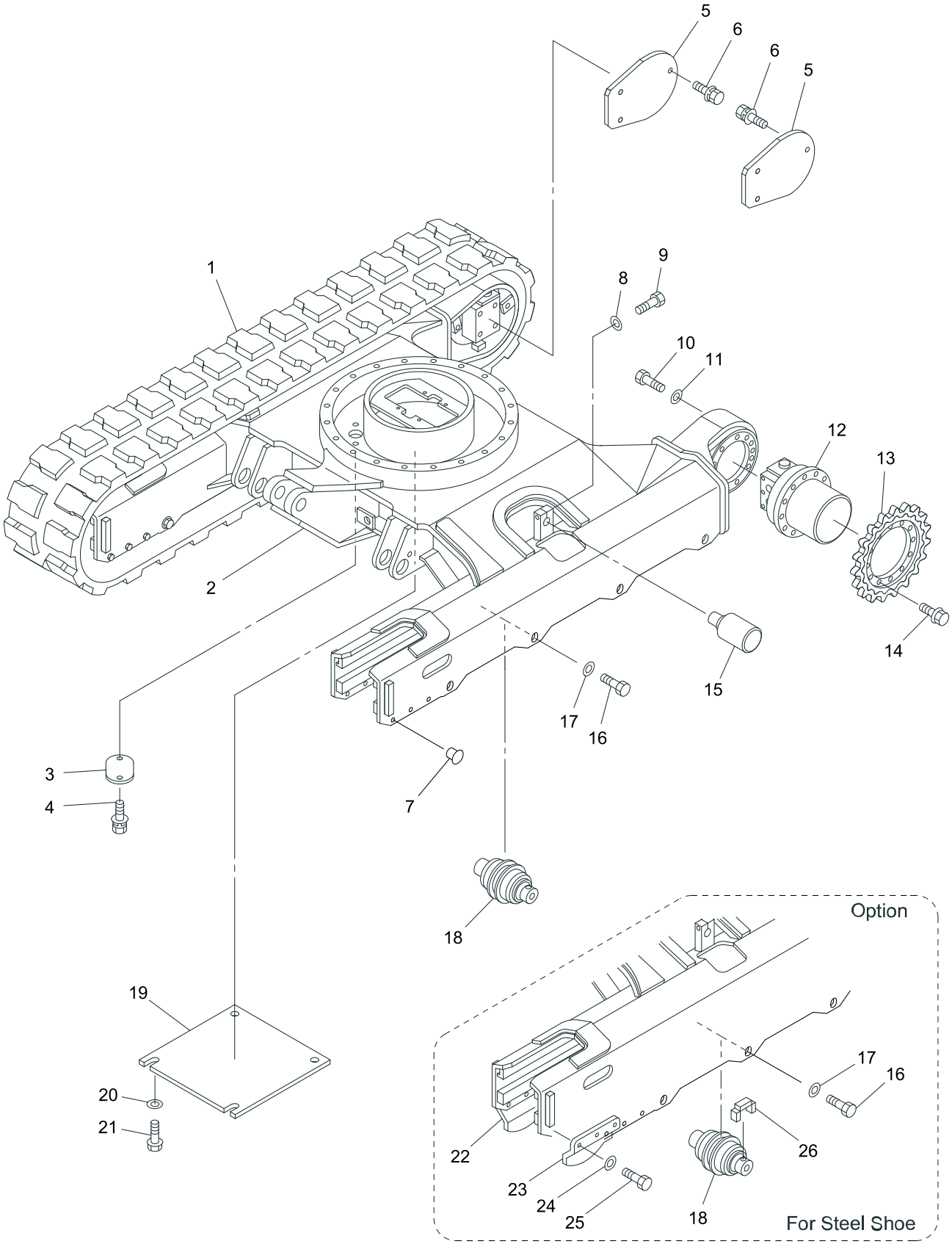

40V4-010100-1

IHI

LOWER MACHINE ASS'Y

MODEL 55V4

SHEET No 1-1

https://truckmanualshub.com/

KEY No.	SUP.	PART No.	DESCRIPTION	Q'TY	CHAN.	SERIAL No.	REMARKS
0	×	**** *** **	Lower Machine Ass'y	1		WY010001-	
1		0653 981 UA	* Shoe, Rubber Crawler	2		WY010001-	
1-1	#	0653 974 UA	* Shoe Ass'y, Crawler (Steel)	2		WY010001-	Sh. No. 1-2
2	×	**** *** **	* Frame, Lower	1		WY010001-	
3		4460 756 00	* Cover	1		WY010001-	
4		0517 080 12	* Bolt, Treatment (W/L.W, F.W)	2		WY010001-	M8X12
5		D458 184 00	* Cover	2		WY010001-	
6		0518 100 20	* Bolt, Treatment (W/L.W, F.W)	6		WY010001-	M10X20 P=1.25
7		0690 201 09	* Plug	12		WY010001-	
8		0595 160 00	* Washer, Treatment	2		WY010001-	M16
9		0555 160 65	* Bolt, Treatment	2		WY010001-	M16X65
10		0555 140 35	* Bolt, Treatment	24		WY010001-	M14X35
11		0595 140 00	* Washer, Treatment	24		WY010001-	M14
12	#	0781 372 UA	* Motor Ass'y, Travel	2		WY010001-	Sh. No. 5-1
13		D234 037 00	* Sprocket, Drive	2		WY010001-	
14		0457 140 35	* Bolt, Treatment (W/Flange)	24		WY010001-	M14X35
15	#	0651 911 UA	* Roller Ass'y, Upper	2		WY010001-	Sh. No. 1-6
16		0555 200 30	* Bolt, Treatment	16		WY010001-	M20X30
17		0595 200 00	* Washer, Treatment	16		WY010001-	M20
18	#	0653 984 UA	* Roller Ass'y, Lower	8		WY010001-	Sh. No. 1-5
19		4461 932 00	* Cover, Under	1		WY010001-	
20		0593 100 00	* Washer, Flat	4		WY010001-	M10
21		0480 100 20	* Bolt, Treatment (W/Flange)	4		WY010001-	M10X20 P=1.25
22		4475 591 00	* Guide, Shoe (R.H.)	2		WY010001-	
23		4475 590 00	* Guide, Shoe (L.H.)	2		WY010001-	
24		0595 120 00	* Washer, Treatment	12		WY010001-	M12
25		0555 120 35	* Bolt, Treatment	12		WY010001-	M12X35
26		D007 060 00	* Shim	16		WY010001-	t=9.0

https://truckmanualshub.com/

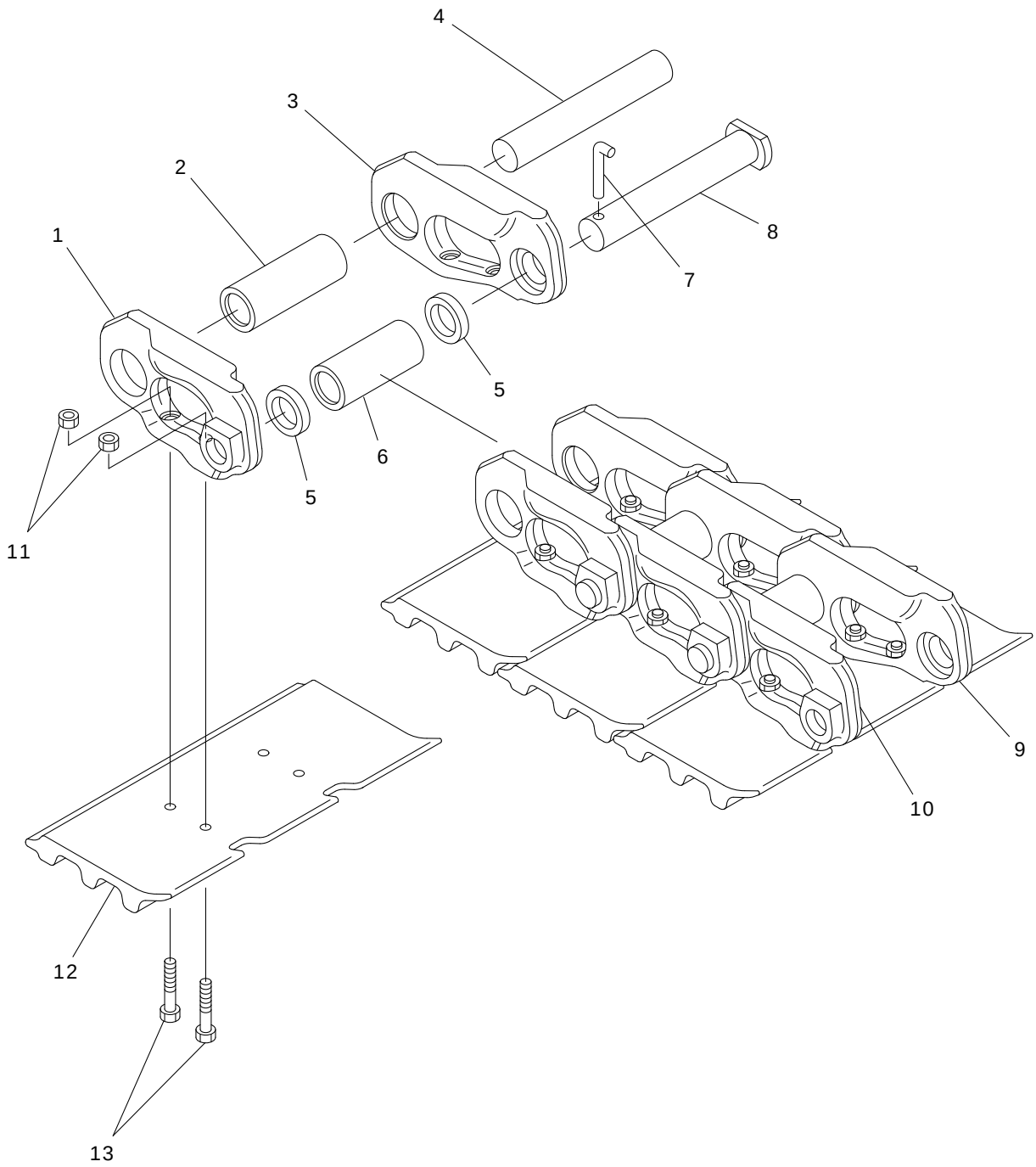

45VX-010200-1

IHI

CRAWLER SHOE ASS'Y

MODEL 55V4

SHEET No 1-2

https://truckmanualshub.com/

KEY No.	SUP.	PART No.	DESCRIPTION	Q'TY	CHAN.	SERIAL No.	REMARKS
0		0653 974 UA	Shoe Ass'y, Crawler	2		WY010001-	L=400
0-1		0653 974 99	* Link, Ass'y	1		WY010001-	
1		0653 973 04	** Link, Master (L.H.)	1		WY010001-	
2		0653 973 05	** Bushing, Track	38		WY010001-	
3		0653 973 03	** Link, Master (R.H.)	1		WY010001-	
4		0653 973 06	** Pin, Track	38		WY010001-	
5		0651 588 07	** Collar, Master	2		WY010001-	
6		0653 973 07	** Bushing, Master	1		WY010001-	
7		0653 924 10	** Pin, Lock	1		WY010001-	
8		0653 973 08	** Pin, Master	1		WY010001-	
9		0653 973 01	** Link, Track (R.H.)	38		WY010001-	
10		0653 973 02	** Link, Track (L.H.)	38		WY010001-	
11		0653 010 10	* Nut, Shoe	156		WY010001-	
12		0653 779 01	* Plate, Shoe	39		WY010001-	L=400
13		0653 010 09	* Bolt, Shoe	156		WY010001-	

1

https://truckmanualshub.com/

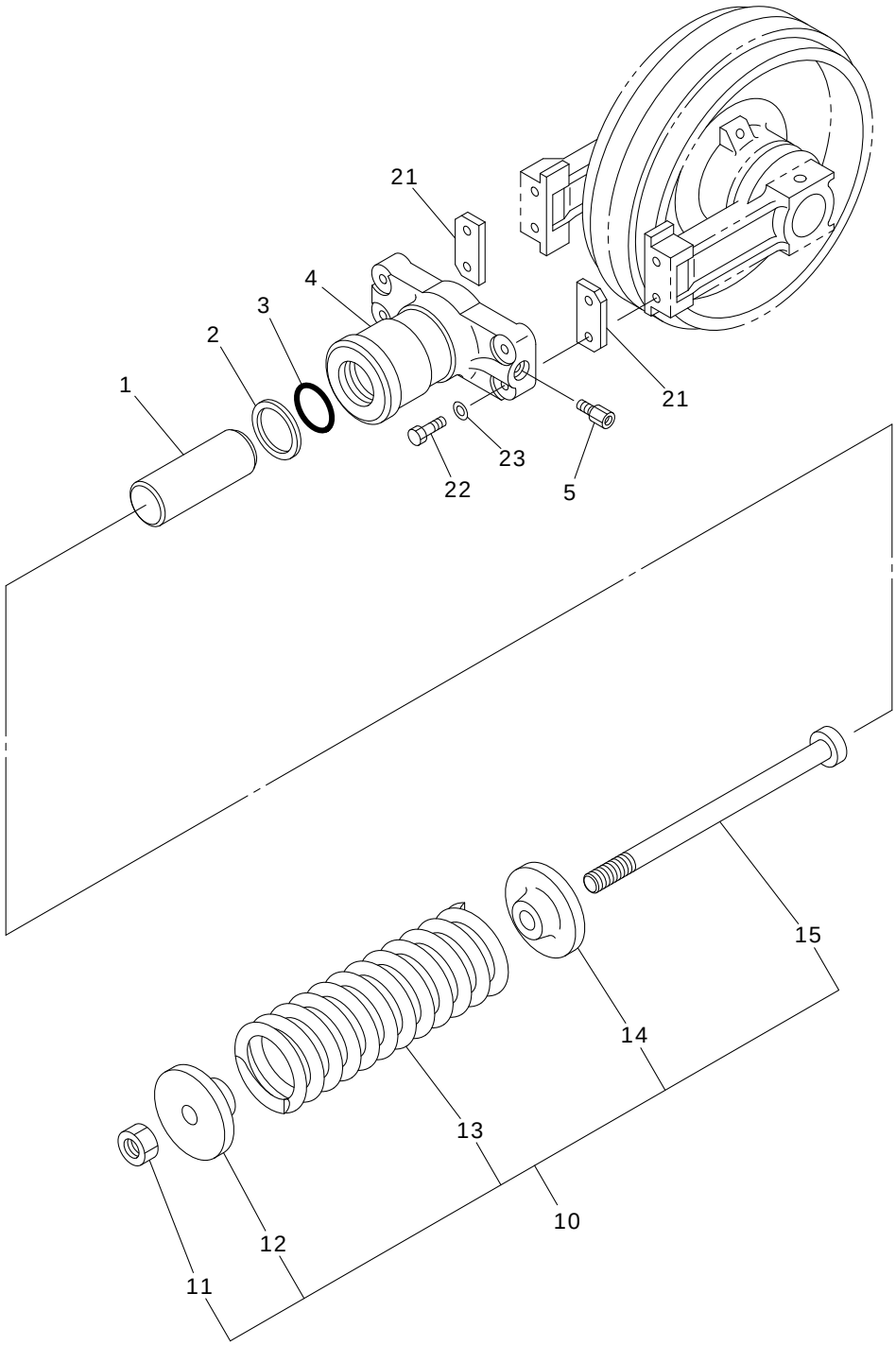

65VX-010300-1

IHI

CRAWLER SHOE ADJ. DEVICE

MODEL 55V4

SHEET No 1-3

https://truckmanualshub.com/

KEY No.	SUP.	PART No.	DESCRIPTION	Q'TY	CHAN.	SERIAL No.	REMARKS
0	×	5301 231 00	Adj. Device, Crawler Shoe	2		WY010001-	
0-1		5301 232 02	* Cylinder Ass'y, Grease	1		WY010001-	
1		4515 506 00	** Piston	1		WY010001-	
2		0762 120 50	** Ring, Back-up	1		WY010001-	P50-T2
3		0760 710 50	** Ring, O	1		WY010001-	P50-90B
4		4514 549 00	** Cylinder, Grease	1		WY010001-	
5		0753 265 UA	** Valve, Check	1		WY010001-	
10		5300 759 99	* Unit Ass'y, Spring (For Rubber Shoe)	1		WY010001-	
11		0580 200 00	** Nut, Hex.	1		WY010001-	M20
12		4485 508 00	** Retainer, Spring	1		WY010001-	
13		4170 126 00	** Spring	1		WY010001-	
14		4485 509 00	** Retainer, Spring	1		WY010001-	
15		4004 128 00	** Bolt, Adjust	1		WY010001-	
21		4401 631 00	* Plate	2		WY010001-	
22		0514 120 60	* Bolt, Treatment	4		WY010001-	M12X60 P=1.25
23		0595 120 00	* Washer, Treatment	4		WY010001-	M12

1

https://truckmanualshub.com/

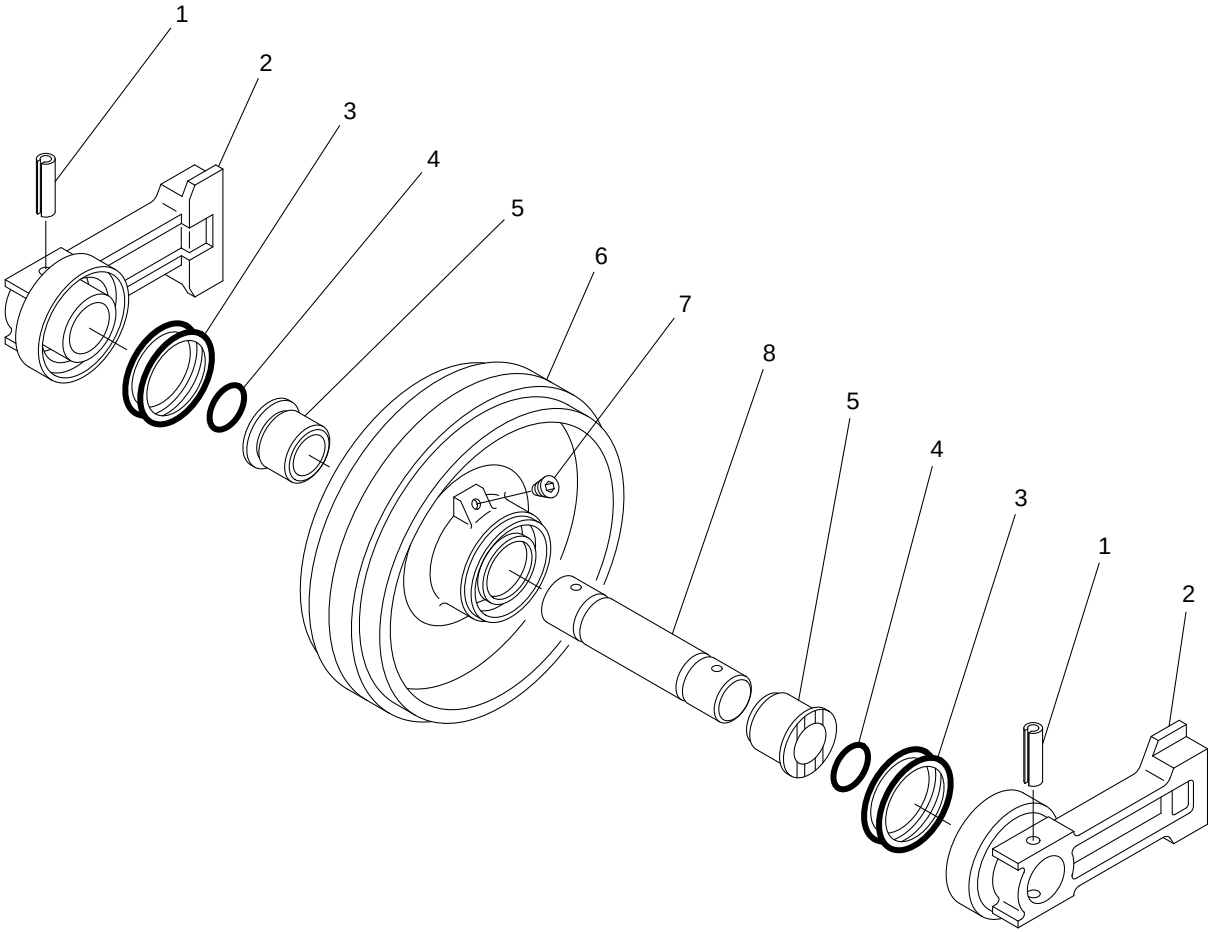

45VX-010400-1

IHI

FRONT IDLER ASS'Y

MODEL 55V4

SHEET No 1-4

https://truckmanualshub.com/

KEY No.	SUP.	PART No.	DESCRIPTION	Q'TY	CHAN.	SERIAL No.	REMARKS
0		F300 686 00	Idler Ass'y, Front	2		WY010001-	
1		0494 651 75	* Pin, Spring	2		WY010001-	d=10X75
2		4420 525 00	* Block, Bearing	2		WY010001-	
3		0763 014 67	* Seal, Floating	2		WY010001-	
4		0760 715 45	* Ring, O	2		WY010001-	G45-90B
5		4047 035 02	* Bushing	2		WY010001-	
6		D236 021 00	* Idler, Front	1		WY010001-	
7		0710 201 01	* Plug	1		WY010001-	PT1/8
8		4012 220 00	* Shaft	1		WY010001-	

1

https://truckmanualshub.com/

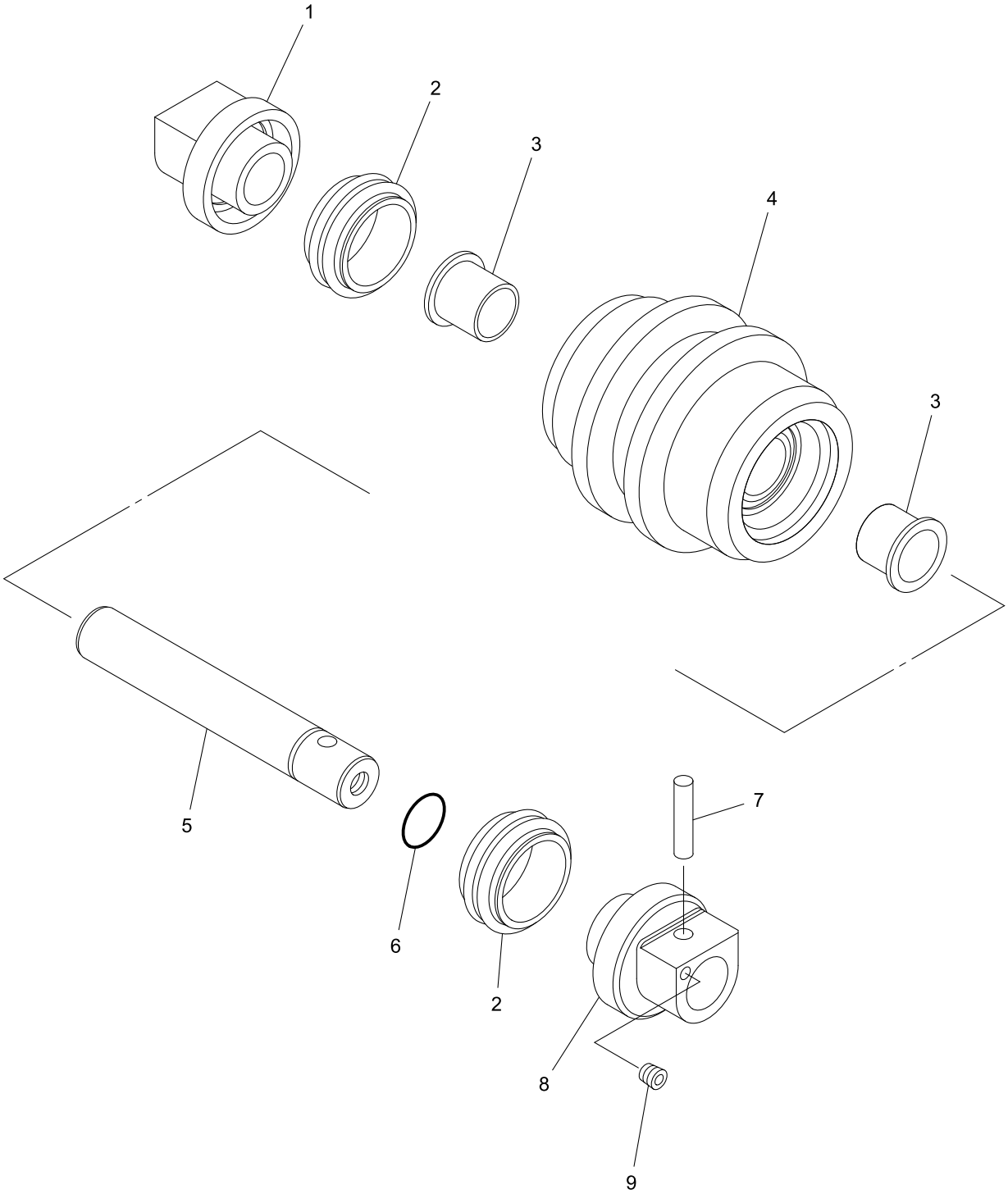

0653984UA-1

IHI

LOWER ROLLER ASS'Y

MODEL 55V4

SHEET No 1-5

https://truckmanualshub.com/

KEY No.	SUP.	PART No.	DESCRIPTION	Q'TY	CHAN.	SERIAL No.	REMARKS
0		0653 984 UA	Roller Ass'y, Lower	8		WY010001-	
1		0653 984 04	* Collar Roller	1		WY010001-	
2		0763 014 60	* Seal, Floating	2		WY010001-	
3		0653 984 05	* Bushing	2		WY010001-	
4		0653 984 01	* Roller	1		WY010001-	
5		0653 984 02	* Shaft	1		WY010001-	
6		0760 715 35	* Ring, O	1		WY010001-	G35-90B
7		0653 984 06	* Pin	1		WY010001-	
8		0653 984 03	* Collar, Roller	1		WY010001-	
9		0710 201 01	* Plug	1		WY010001-	

https://truckmanualshub.com/

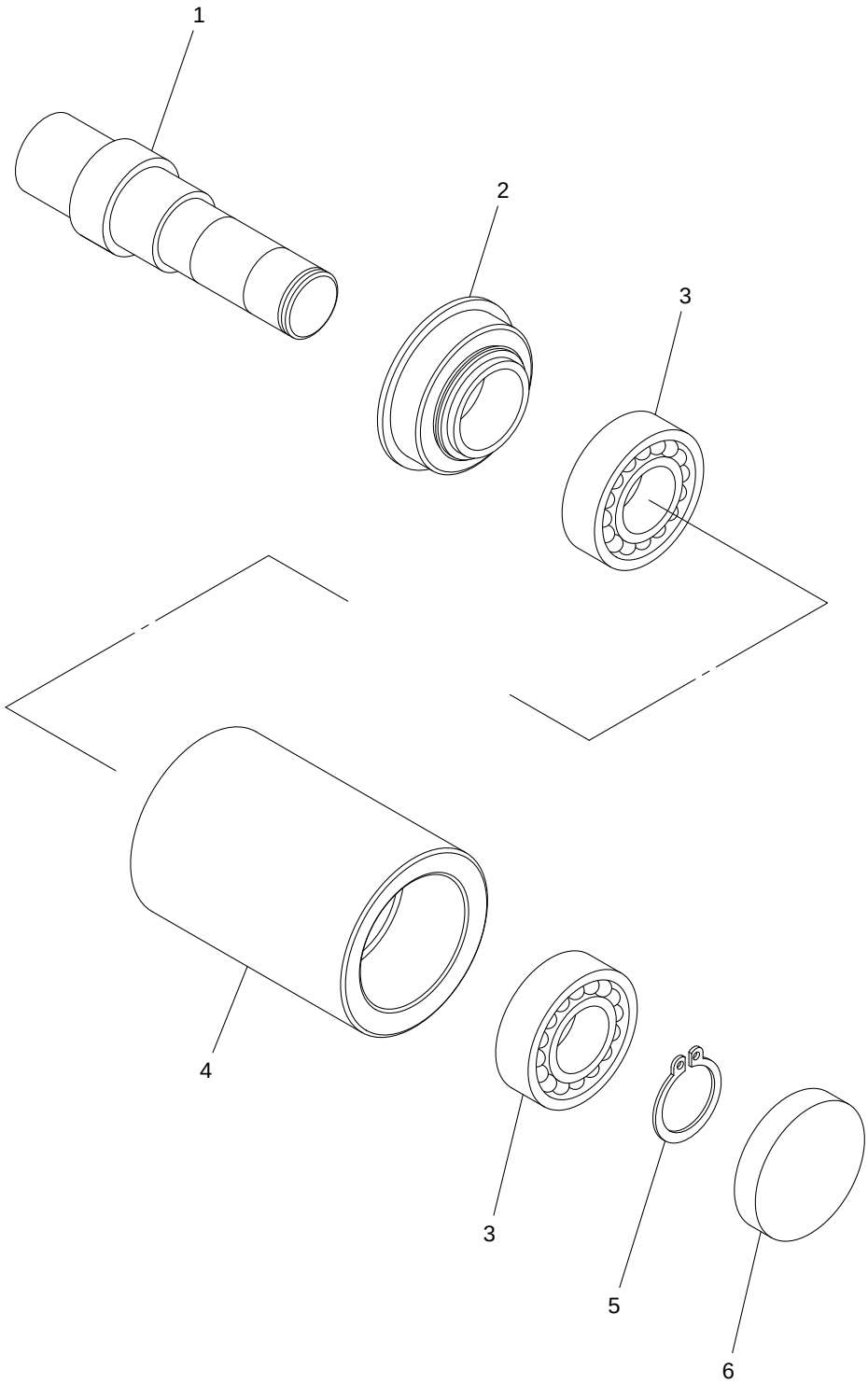

0651911UA-1

IHI

UPPER ROLLER ASS'Y

MODEL 55V4

SHEET No 1-6

https://truckmanualshub.com/

KEY No.	SUP.	PART No.	DESCRIPTION	Q'TY	CHAN.	SERIAL No.	REMARKS
0		0651 911 UA	Roller Ass'y, Upper	2		WY010001-	
1		0651 911 03	* Seal	1		WY010001-	
2		0630 620 50	* Bearing	2		WY010001-	#6205
3		0651 911 02	* Shaft, Roller	1		WY010001-	
4		0493 510 25	* Ring, Snap	1		WY010001-	d=25
5		0651 911 04	* Cap	1		WY010001-	
6		0651 911 01	* Roller	1		WY010001-	

1

https://truckmanualshub.com/

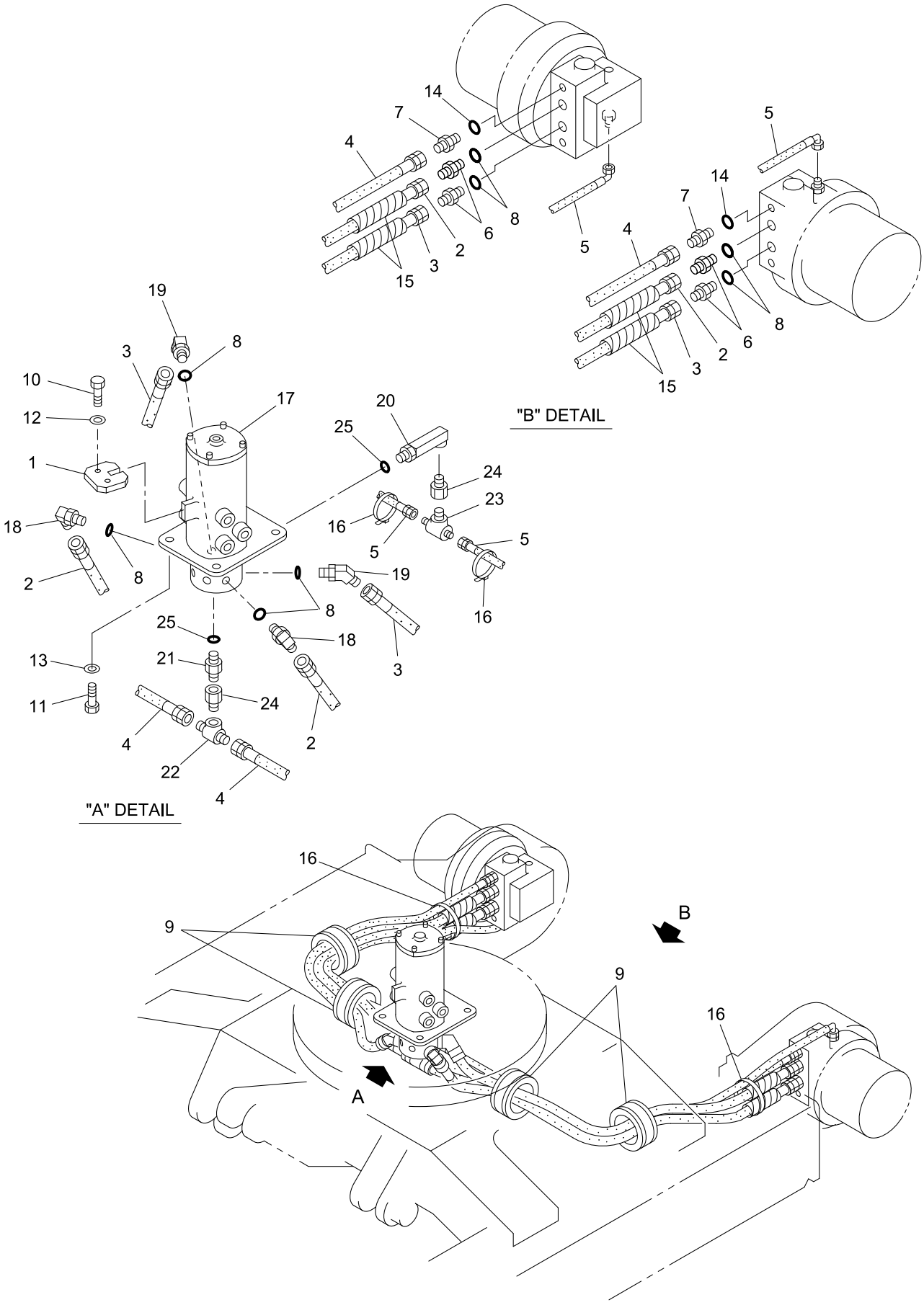

40V4-010700-1

https://truckmanualshub.com/

KEY No.	SUP.	PART No.	DESCRIPTION	Q'TY	CHAN.	SERIAL No.	REMARKS
0	×	F342 647 00	Piping Ass'y, Lower Travel	1		WY010001-	
1		D260 516 00	* Stay	1		WY010001-	
2		D070 350 05	* Hose Ass'y	2		WY010001-	L=1400
3		D070 350 06	* Hose Ass'y	2		WY010001-	L=1350
4		4070 015 26	* Hose Ass'y	2		WY010001-	L=1350
5		4070 551 18	* Hose Ass'y	2		WY010001-	L=1460
6		0713 700 04	* Adapter	4		WY010001-	
7		0713 700 03	* Adapter	2		WY010001-	
8		0760 710 19	* Ring, O	8		WY010001-	P18-90B
9		4580 730 00	* Pad	4		WY010001-	
10		0555 160 40	* Bolt, Treatment	2		WY010001-	M16X40
11		0514 100 30	* Bolt, Treatment	4		WY010001-	M10X30 P=1.25
12		0595 160 00	* Washer, Treatment	2		WY010001-	M16
13		0595 100 00	* Washer, Treatment	4		WY010001-	M10
14		0760 710 16	* Ring, O	2		WY010001-	P14-90B
15		0790 000 02	* Tube, Spiral	M		WY010001-	L=200X4
16		0820 067 05	* Band, Cable	4		WY010001-	
17	#	0713 439 UA	* Joint Ass'y, Rotary	1		WY010001-	Sh. No. 5-3
18		0710 113 44	* Elbow	2		WY010001-	
19		0710 114 44	* Elbow, 45	2		WY010001-	
20		0719 805 UA	* Elbow	1		WY010001-	
21		0713 704 02	* Adapter	1		WY010001-	
22		0710 707 04	* Tee	1		WY010001-	
23		0710 707 02	* Tee	1		WY010001-	Option
24		0710 503 02	* Socket	2		WY010001-	
25		0760 710 12	* Ring, O	2		WY010001-	P11-90B

1

https://truckmanualshub.com/

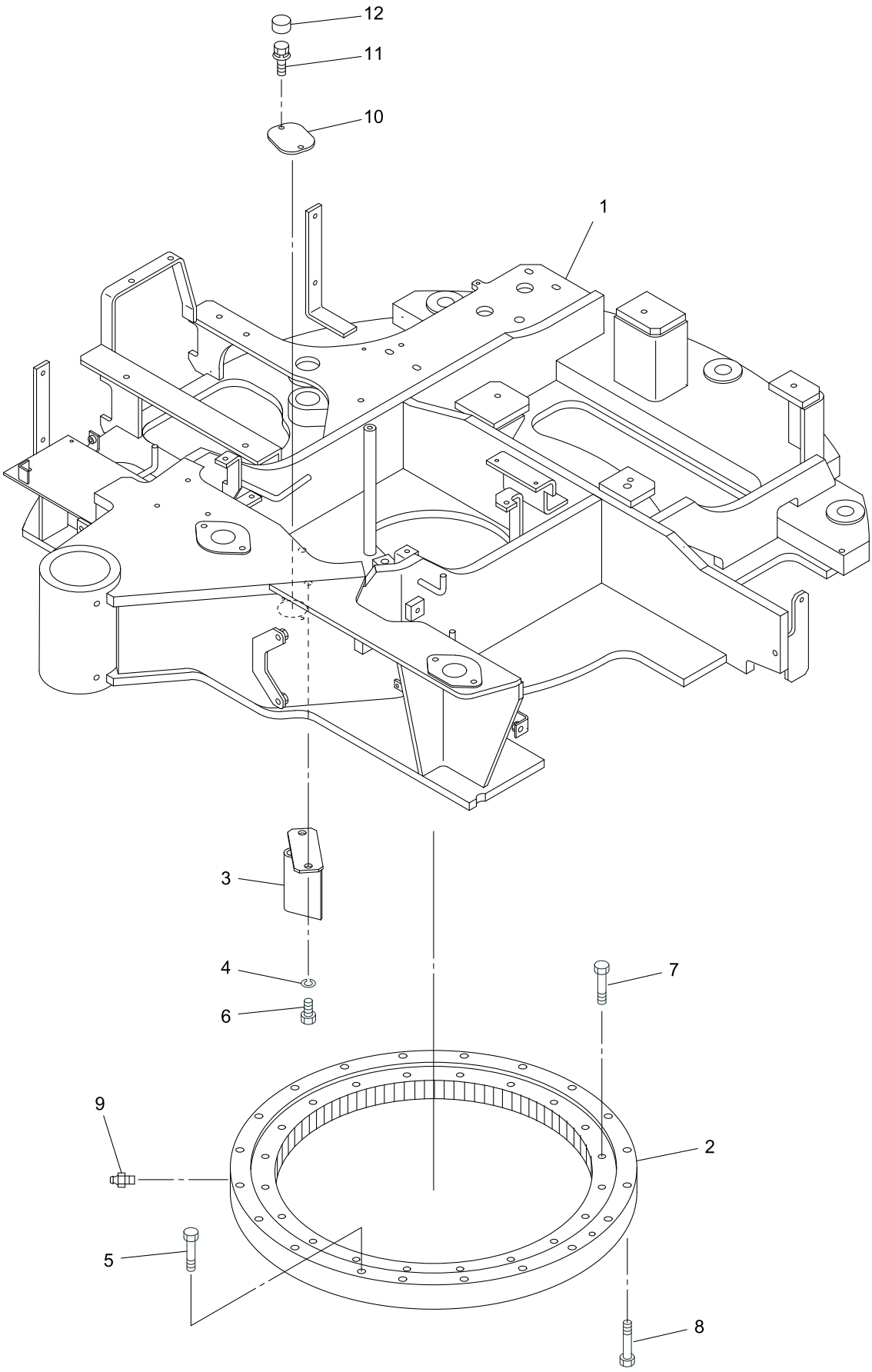

40V4-020100-1

https://truckmanualshub.com/

KEY No.	SUP.	PART No.	DESCRIPTION	Q'TY	CHAN.	SERIAL No.	REMARKS
0	×	F311 358 00	Frame Ass'y, Swing	1		WY010001-	
0-1	×	F320 258 00	Bearing Ass'y, Swing	1		WY010001-	
1	△	D204 356 00	* Frame, Swing	1		WY010001-	
2		0605 416 UA	* Bearing, Swing	1		WY010001-	
3		D416 789 00	* Bracket	1		WY010001-	
4		0590 160 00	* Washer, Lock	2		WY010001-	M16
5		D002 015 00	* Bolt, Reamer	1		WY010001-	
6		0555 160 35	* Bolt, Treatment	2		WY010001-	M16X35
7		0555 160 70	* Bolt, Treatment	20		WY010001-	M16X70
8		0555 160 80	* Bolt, Treatment	19		WY010001-	M16X80
9		0728 111 15	* Nipple, Grease	1		WY010001-	PT1/8
10		4460 756 00	* Cover	1		WY010001-	
11		0517 080 20	* Bolt, Treatment (W/L.W, F.W)	2		WY010001-	M8X20
12		0690 202 56	* Cap	2		WY010001-	

https://truckmanualshub.com/

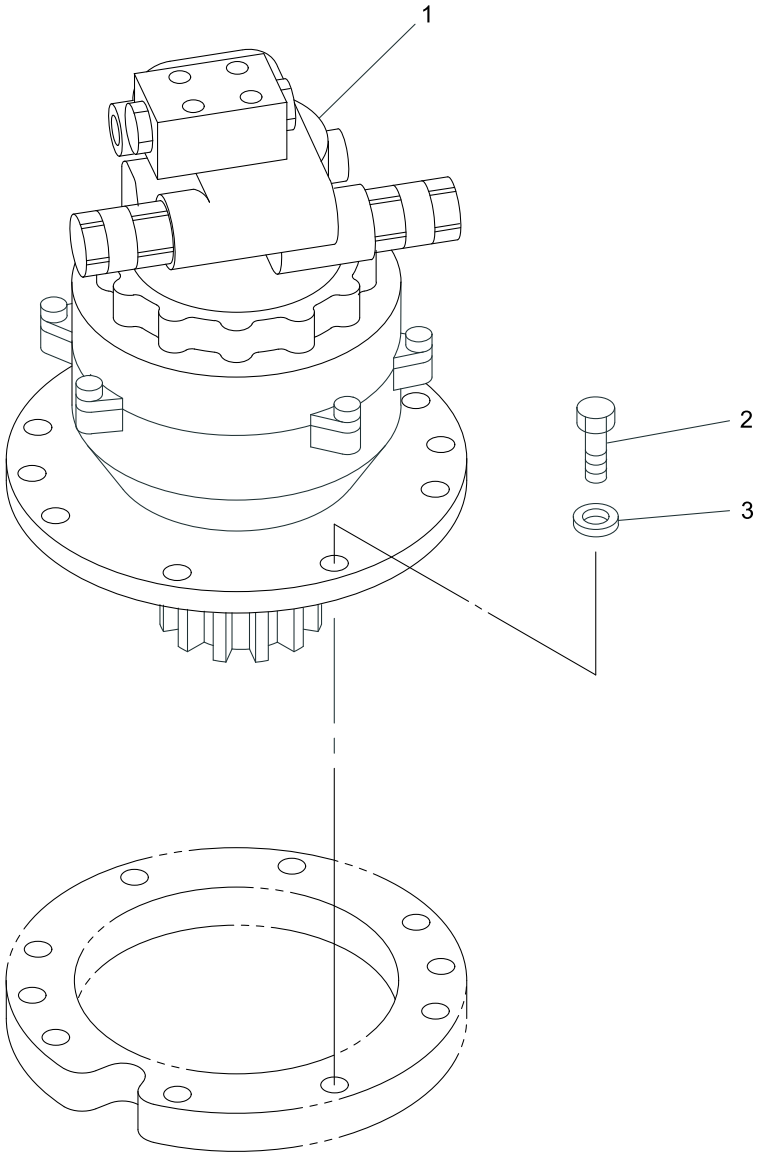

40V4-030100-1

https://truckmanualshub.com/

KEY No.	SUP.	PART No.	DESCRIPTION	Q'TY	CHAN.	SERIAL No.	REMARKS
0	×	F320 251 00	Swing Drive Device	1		WY010001-	
1	#	0781 373 UA	* Motor Ass'y, Swing	1		WY010001-	Sh. No. 5-2
2		0555 160 40	* Bolt, Treatment	10		WY010001-	M16X40
3		0595 160 00	* Washer, Treatment	10		WY010001-	M16

3

https://truckmanualshub.com/

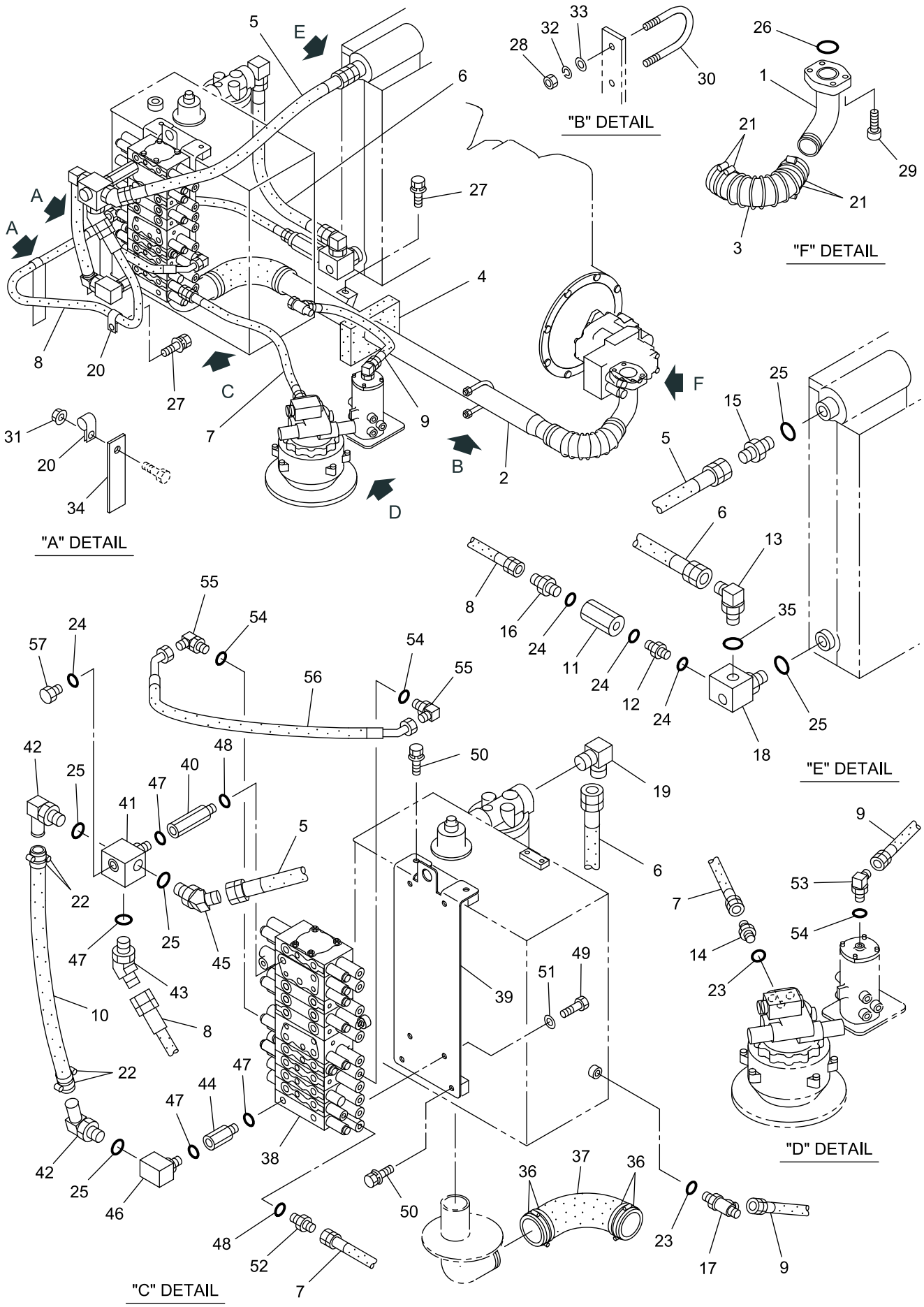

40V4-040100-1

https://truckmanualshub.com/

KEY No.	SUP.	PART No.	DESCRIPTION	Q'TY	CHAN.	SERIAL No.	REMARKS
0	×	F342 651 00	Piping Ass'y, Return & Suction	1		WY010001-	
1		D286 277 00	* Tube	1		WY010001-	
2		D286 347 00	* Tube	1		WY010001-	
3		0776 600 08	* Hose	1		WY010001-	
4		D493 668 00	* Panel, Sponge	1		WY010001-	
5		D070 119 01	* Hose Ass'y	1		WY010001-	L=680
6		4070 026 44	* Hose Ass'y	1		WY010001-	L=700
7		4070 013 07	* Hose Ass'y	1		WY010001-	L=650
8		4070 754 14	* Hose Ass'y	1		WY010001-	L=1700
9		4070 015 14	* Hose Ass'y	1		WY010001-	L=400
10		D070 572 01	* Hose	1		WY010001-	L=320
11		0785 947 UA	* Valve, Check	1		WY010001-	
12		D060 514 00	* Connector	1		WY010001-	
13		0710 113 11	* Elbow	1		WY010001-	
14		0713 700 94	* Adapter, Reducer	1		WY010001-	PF3/8XPF1/2
15		0713 700 74	* Adapter	1		WY010001-	
16		0713 700 73	* Adapter	1		WY010001-	
17		0710 713 10	* Tee, Special	1		WY010001-	
18		D060 531 00	* Connector	1		WY010001-	
19		0712 310 55	* Elbow	1		WY010001-	
20		4080 000 06	* Clamp, Hose	3		WY010001-	
21		0690 078 12	* Clamp, Hose	4		WY010001-	
22		0690 083 08	* Clamp, Hose	4		WY010001-	
23		0760 710 16	* Ring, O	2		WY010001-	P14-90B
24		0760 710 24	* Ring, O	4		WY010001-	P22.4-90B
25		0760 710 30	* Ring, O	5		WY010001-	P29-90B
26		0760 312 25	* Ring, O	1		WY010001-	P225-90B
27		0518 100 20	* Bolt, Treatment (W/L.W, F.W)	2		WY010001-	M10X20 P=1.25
28		0580 120 00	* Nut, Hex.	2		WY010001-	M12
29		0562 120 35	* Bolt, Socket Head	4		WY010001-	M12X35
30		4003 003 00	* Bolt, U	1		WY010001-	
31		0524 100 00	* Nut, Hex. (W/F.W)	2		WY010001-	M10 P=1.25
32		0590 120 00	* Washer, Lock	2		WY010001-	M12
33		0595 120 00	* Washer, Treatment	2		WY010001-	M12
34		D401 498 00	* Plate	2		WY010001-	
35		0760 710 40	* Ring, O	1		WY010001-	P38-90B
36		0690 083 13	* Clamp, Hose	4		WY010001-	
37		0776 600 11	* Hose	1		WY010001-	
38	#	0784 015 UA	* Valve Ass'y, Control	1		WY010001-	Sh. No. 5-4
39		D419 060 00	* Bracket	1		WY010001-	
40		D060 532 00	* Connector	1		WY010001-	
41		D060 530 00	* Connector	1		WY010001-	
42		0710 127 06	* Elbow	2		WY010001-	
43		0710 114 66	* Elbow, 45	1		WY010001-	
44		D060 533 00	* Connector	1		WY010001-	
45		0710 114 88	* Elbow, 45	1		WY010001-	PF1XPT1
46		D060 534 00	* Elbow	1		WY010001-	
47		0760 710 25	* Ring, O	4		WY010001-	P24-90B
48		0760 710 19	* Ring, O	2		WY010001-	P18-90B
49		0513 100 16	* Bolt, Treatment	4		WY010001-	M10X16
50		0518 100 25	* Bolt, Treatment (W/L.W, F.W)	4		WY010001-	M10X25 P=1.25
51		0595 100 00	* Washer, Treatment	4		WY010001-	M10

https://truckmanualshub.com/

KEY No.	SUP.	PART No.	DESCRIPTION	Q'TY	CHAN.	SERIAL No.	REMARKS
52		D060 526 00	* Adapter	1		WY010001-	
53		0710 113 23	* Elbow, Reducer	1		WY010001-	PF1/4XPF3/8
54		0760 710 12	* Ring, O	3		WY010001-	P11-90B
55		0710 122 09	* Elbow	2		WY010001-	
56		D070 605 00	* Hose Ass'y	1		WY010001-	
57		0710 212 12	* Plug	1		WY010001-	

https://truckmanualshub.com/

[Memo]

https://truckmanualshub.com/

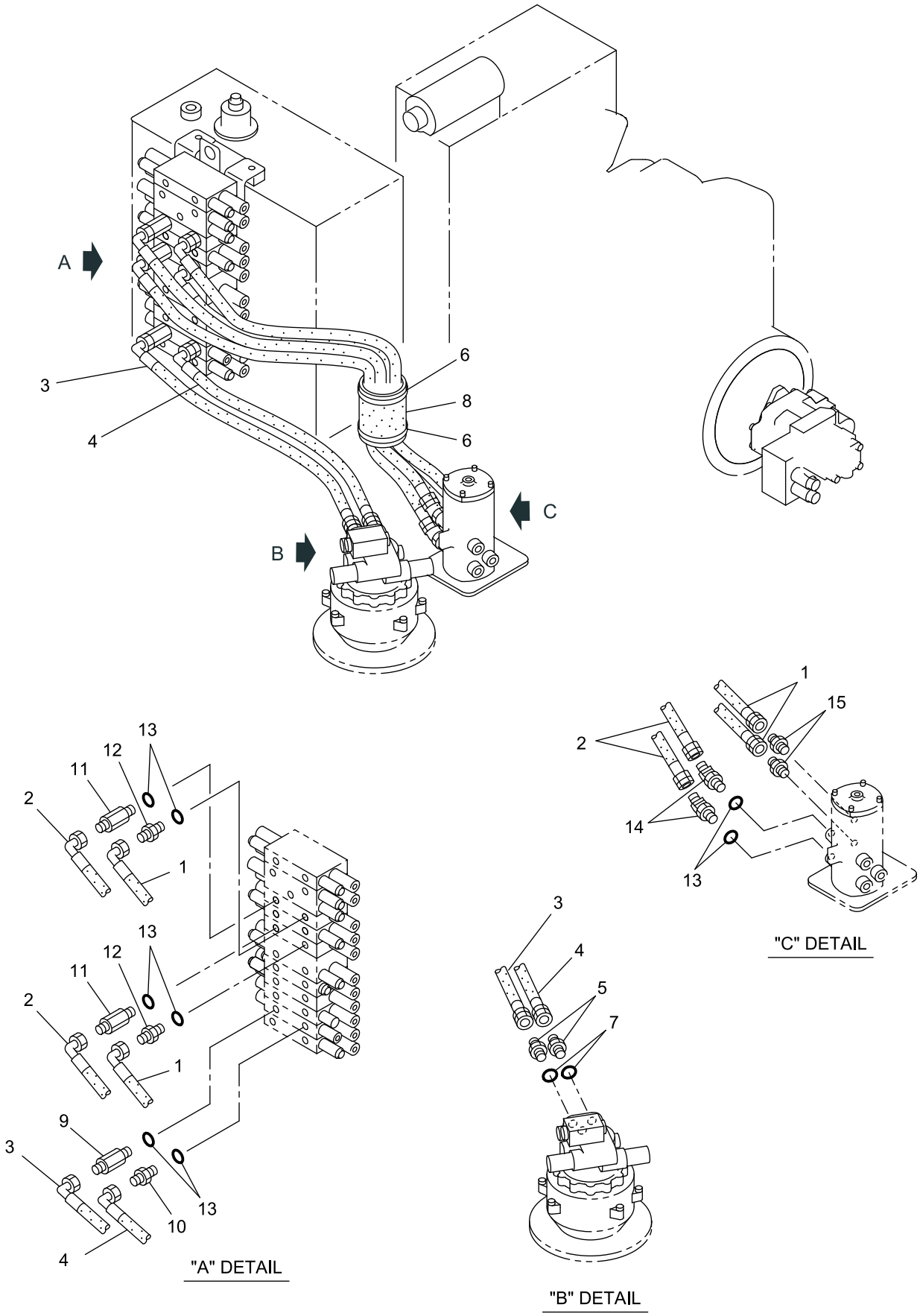

40V4-040200-1

https://truckmanualshub.com/

KEY No.	SUP.	PART No.	DESCRIPTION	Q'TY	CHAN.	SERIAL No.	REMARKS
0	×	F342 651 00	Piping Ass'y, Swing & Travel	1		WY010001-	
1		D070 363 19	* Hose Ass'y	2		WY010001-	L=1100
2		D070 363 04	* Hose Ass'y	2		WY010001-	L=950
3		D070 362 14	* Hose Ass'y	1		WY010001-	L=770
4		D070 362 12	* Hose Ass'y	1		WY010001-	L=730
5		0713 700 03	* Adapter	2		WY010001-	
6		0820 067 10	* Band, Cable	2		WY010001-	
7		0760 710 16	* Ring, O	2		WY010001-	P14-90B
8		4070 351 03	* Cover, Hose	1		WY010001-	
9		D060 071 00	* Bush, Reducer	1		WY010001-	PF1/2XPF3/8
10		0713 700 78	* Adapter, Reducer	1		WY010001-	PF1/2XPF3/8
11		4072 971 00	* Connector	2		WY010001-	PF1/2XPF3/8
12		0713 700 04	* Adapter	2		WY010001-	
13		0760 710 19	* Ring, O	8		WY010001-	P18-90B
14		0710 114 44	* Elbow, 45	2		WY010001-	
15		0713 700 04	* Adapter	2		WY010001-	

4

https://truckmanualshub.com/

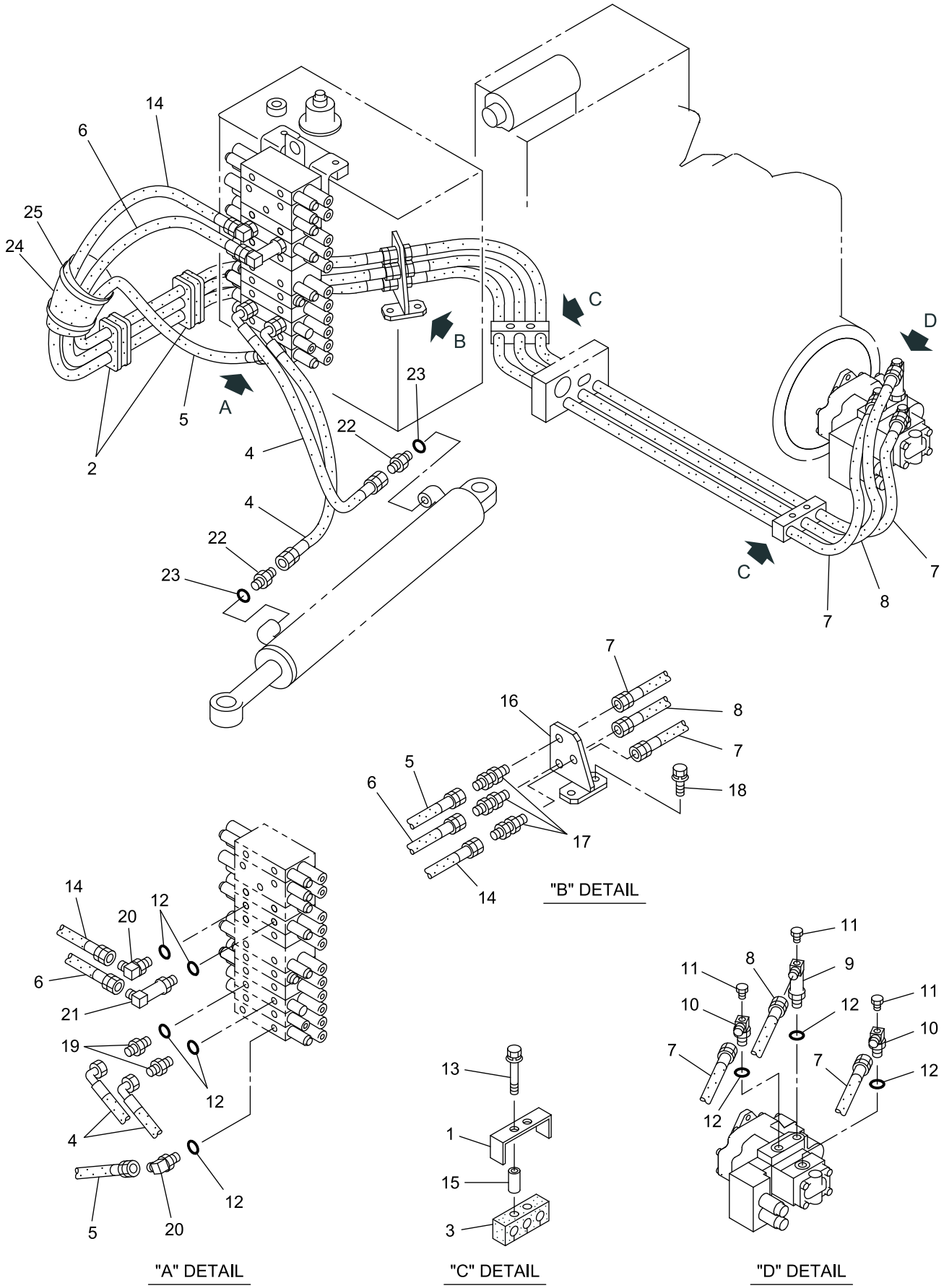

40V4-040300-1

https://truckmanualshub.com/

KEY No.	SUP.	PART No.	DESCRIPTION	Q'TY	CHAN.	SERIAL No.	REMARKS
0	×	F342 651 00	Piping Ass'y, Pump Discharge & Boom Swing	1		WY010001-	
0-1	×	F388 388 00	Piping Ass'y, Pump Discharge & Boom Swing	1		WY010001-	
1		D083 154 00	* Clamp	2		WY010001-	
2		D580 170 00	* Pad	2		WY010001-	
3		D580 184 00	* Pad	2		WY010001-	
4		D070 360 02	* Hose Ass'y	2		WY010001-	L=710
5		D070 350 11	* Hose Ass'y	1		WY010001-	L=910
6		D070 350 06	* Hose Ass'y	1		WY010001-	L=1350
7		D070 578 01	* Hose Ass'y	2		WY010001-	L=2090
8		D070 578 02	* Hose Ass'y	1		WY010001-	L=2170
9		D060 535 00	* Elbow, Long	1		WY010001-	
10		D060 408 00	* Elbow	2		WY010001-	
11		0710 202 02	* Plug	3		WY010001-	
12		0760 710 19	* Ring, O	8		WY010001-	P18-90B
13		0517 080 50	* Bolt, Treatment (W/L.W, F.W)	4		WY010001-	M8X50
14		D070 350 10	* Hose Ass'y	1		WY010001-	L=1290
15		D040 249 07	* Spacer	4		WY010001-	
16		D419 490 00	* Bracket	1		WY010001-	
17		D060 540 00	* Connector	3		WY010001-	
18		0518 100 30	* Bolt, Treatment (W/L.W, F.W)	2		WY010001-	M10X30 P=1.25
19		D060 503 00	* Adapter, Reducer	2		WY010001-	PF1/2XPF1/4
20		0710 113 44	* Elbow	2		WY010001-	
21		4072 769 00	* Elbow, Long	1		WY010001-	
22		0713 700 77	* Adapter, Reducer	2		WY010001-	PF3/8XPF1/4
23		0760 710 16	* Ring, O	2		WY010001-	P14-90B
24		4070 390 03	* Cover, Hose	1		WY010001-	
25		0820 067 10	* Band, Cable	2		WY010001-	

https://truckmanualshub.com/

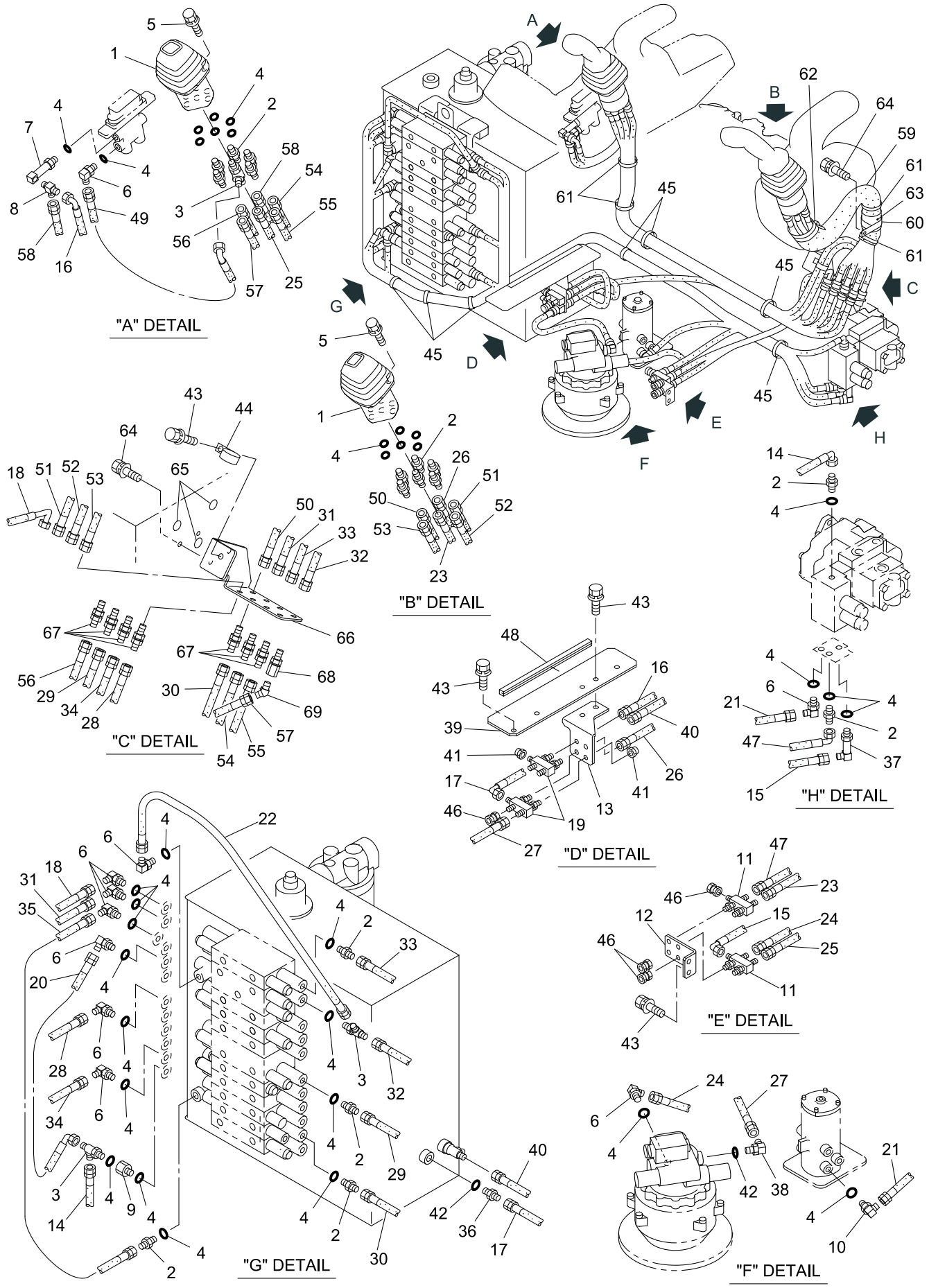

40V4-040400-1

https://truckmanualshub.com/

KEY No.	SUP.	PART No.	DESCRIPTION	Q'TY	CHAN.	SERIAL No.	REMARKS
0	×	F342 640 00	Piping Ass'y, Control	1		WY010001-	
1	#	0783 964 UA	* Valve Assy Remote Control	2		WY010001-	Sh. No. 5-5
2		0713 700 70	* Connector	17		WY010001-	
3		0710 713 09	* Tee	3		WY010001-	
4		0760 710 12	* Ring, O	34		WY010001-	P11-90B
5		0517 060 25	* Bolt, Treatment (W/L.W, F.W)	6		WY010001-	M6X25
6		0710 122 09	* Elbow	10		WY010001-	
7		0719 805 UA	* Elbow	1		WY010001-	
8		0710 709 02	* Tee	1		WY010001-	
9		D060 525 00	* Connector	1		WY010001-	
10		0710 117 02	* Elbow	1		WY010001-	
11		D065 093 00	* Manifold	2		WY010001-	
12		D418 943 00	* Bracket	1		WY010001-	
13		D418 944 00	* Bracket	1		WY010001-	
14		4070 551 34	* Hose Ass'y	1		WY010001-	L=1900
15		4070 551 01	* Hose Ass'y	1		WY010001-	L=1150
16		4070 551 22	* Hose Ass'y	1		WY010001-	L=1000
16-1	☆	D407 818 04	* Decal (BT)	2		WY010001-	D407 818 00
17		4070 124 09	* Hose Ass'y	1		WY010001-	L=470
18		4070 551 43	* Hose Ass'y	1		WY010001-	L=2450
18-1	☆	4405 308 01	* Decal (C1)	2		WY010001-	4405 308 00
19		D065 094 00	* Manifold	2		WY010001-	
20		4070 551 19	* Hose Ass'y	1		WY010001-	L=600
21		4070 548 68	* Hose Ass'y	1		WY010001-	L=1070
22		4070 548 57	* Hose Ass'y	1		WY010001-	L=450
23		4070 548 40	* Hose Ass'y	1		WY010001-	L=1650
23-1	☆	4405 311 02	* Decal (LP)	2		WY010001-	4405 311 00
24		4070 548 82	* Hose Ass'y	1		WY010001-	L=420
25		4070 548 69	* Hose Ass'y	1		WY010001-	L=840
25-1	☆	4405 311 01	* Decal (RP)	2		WY010001-	4405 311 00
26		4070 548 42	* Hose Ass'y	1		WY010001-	L=1670
26-1	☆	4405 312 02	* Decal (LT)	2		WY010001-	4405 312 00
27		4070 548 88	* Hose Ass'y	1		WY010001-	L=780
28		4070 548 89	* Hose Ass'y	1		WY010001-	L=2250
28-1	☆	4405 309 02	* Decal (A2)	2		WY010001-	4405 309 00
29		4070 548 61	* Hose Ass'y	1		WY010001-	L=1700
29-1	☆	4405 309 01	* Decal (A1)	2		WY010001-	4405 309 00
30		4070 548 41	* Hose Ass'y	1		WY010001-	L=1850
30-1	☆	4405 310 02	* Decal (S2)	2		WY010001-	4405 310 00
31		4070 548 35	* Hose Ass'y	1		WY010001-	L=2400
31-1	☆	4405 307 02	* Decal (B2)	2		WY010001-	4405 307 00
32		4070 548 39	* Hose Ass'y	1		WY010001-	L=2000
32-1	☆	4405 307 01	* Decal (B1)	2		WY010001-	4405 307 00
33		4070 548 65	* Hose Ass'y	1		WY010001-	L=1950
33-1	☆	4405 308 02	* Decal (C2)	2		WY010001-	4405 308 00
34		4070 548 21	* Hose Ass'y	1		WY010001-	L=2100
34-1	☆	4405 310 01	* Decal (S1)	2		WY010001-	4405 310 00
35		4070 548 70	* Hose Ass'y	1		WY010001-	L=680
36		0713 700 71	* Adapter	1		WY010001-	
37		0710 117 02	* Elbow, Long	1		WY010001-	
38		0710 113 32	* Elbow, Reducer	1		WY010001-	PF3/8XPF1/4
39		D418 948 00	* Bracket	1		WY010001-	

https://truckmanualshub.com/

KEY No.	SUP.	PART No.	DESCRIPTION	Q'TY	CHAN.	SERIAL No.	REMARKS
40		4070 782 06	* Hose Ass'y	1		WY010001-	L=500
41		0710 303 03	* Plug, Swivel	2		WY010001-	
42		0760 710 16	* Ring, O	2		WY010001-	P14-90B
43		0518 100 20	* Bolt, Treatment (W/L.W, F.W)	7		WY010001-	M10X20 P=1.25
44		4080 000 25	* Clamp, Hose	1		WY010001-	
45		0820 067 05	* Band, Cable	7		WY010001-	
46		0710 303 02	* Plug, Swivel	4		WY010001-	PF1/4
47		4070 551 45	* Hose Ass'y	1		WY010001-	L=950
48		D550 019 00	* Seal	1		WY010001-	L=300
49		4070 551 15	* Hose Ass'y	1		WY010001-	L=350
49-1	☆	D407 818 03	* Decal (BP)	2		WY010001-	D407 818 00
50		4070 548 25	* Hose Ass'y	1		WY010001-	L=700
50-1	☆	4405 309 03	* Decal (L1)	2		WY010001-	4405 309 00
51		4070 548 25	* Hose Ass'y	1		WY010001-	L=700
51-1	☆	4405 310 03	* Decal (L2)	2		WY010001-	4405 310 00
52		4070 548 25	* Hose Ass'y	1		WY010001-	L=700
52-1	☆	4405 309 04	* Decal (L3)	2		WY010001-	4405 309 00
53		4070 548 25	* Hose Ass'y	1		WY010001-	L=700
53-1	☆	4405 310 04	* Decal (L4)	2		WY010001-	4405 310 00
54		4070 548 06	* Hose Ass'y	1		WY010001-	L=1200
54-1	☆	4405 308 03	* Decal (R2)	2		WY010001-	4405 308 00
55		4070 548 06	* Hose Ass'y	1		WY010001-	L=1200
55-1	☆	4405 307 04	* Decal (R3)	2		WY010001-	4405 307 00
56		4070 548 19	* Hose Ass'y	1		WY010001-	L=1250
56-1	☆	4405 307 03	* Decal (R1)	2		WY010001-	4405 307 00
57		4070 548 19	* Hose Ass'y	1		WY010001-	L=1250
57-1	☆	4405 308 04	* Decal (R4)	2		WY010001-	4405 308 00
58		4070 548 08	* Hose Ass'y	1		WY010001-	L=300
58-1	☆	4405 312 01	* Decal (RT)	2		WY010001-	4405 312 00
59		D070 577 01	* Hose	1		WY010001-	
60		4080 000 09	* Clamp, Hose	1		WY010001-	
61		0820 067 09	* Band, Cable	4		WY010001-	
62		0820 067 10	* Band, Cable	1		WY010001-	
63		4580 016 00	* Pad, Rubber	1		WY010001-	
64		0518 100 25	* Bolt, Treatment (W/L.W, F.W)	3		WY010001-	M10X25 P=1.25
65		D405 272 00	* Seal	3		WY010001-	
66		D419 122 00	* Bracket	1		WY010001-	
67		D060 137 00	* Adapter	7		WY010001-	
68		0712 325 02	* Adapter	1		WY010001-	
69		0712 310 40	* Elbow, 45	1		WY010001-	

https://truckmanualshub.com/

[Memo]

https://truckmanualshub.com/

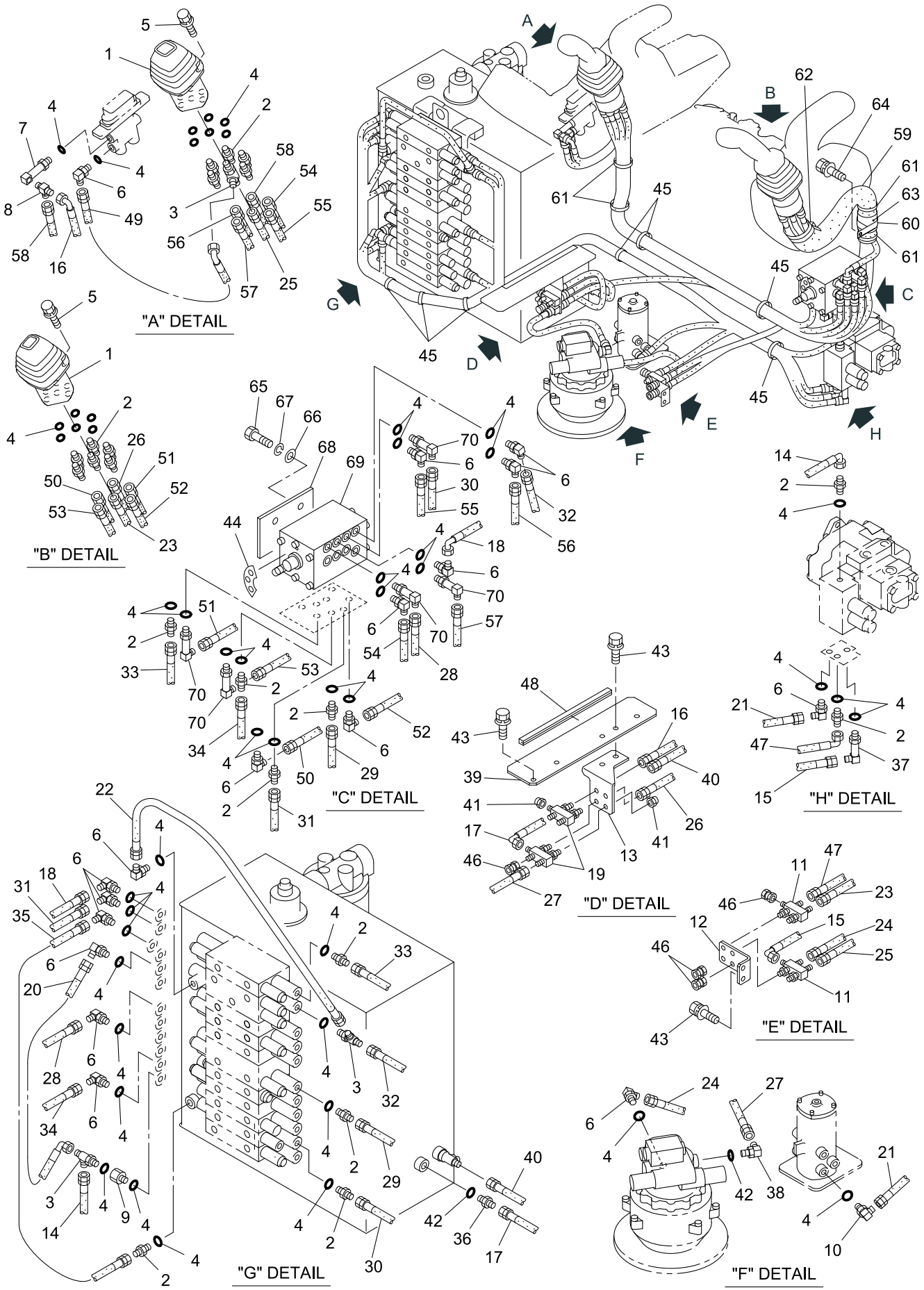

40V4-04040A-1

IHI

CONTROL PIPING ASS'Y (FOR A-D, A.B.G CHANGE)

MODEL 55V4

SHEET No 4-4[A]

https://truckmanualshub.com/

KEY No.	SUP.	PART No.	DESCRIPTION	Q'TY	CHAN.	SERIAL No.	REMARKS
0	×	F342 640 00	Piping Ass'y, Control	1		WY010001-	
1	#	0783 964 UA	* Valve Assy Remote Control	2		WY010001-	Sh. No. 5-5
2		0713 700 70	* Connector	21		WY010001-	
3		0710 713 09	* Tee	3		WY010001-	
4		0760 710 12	* Ring, O	50		WY010001-	P11-90B
5		0517 060 25	* Bolt, Treatment (W/L.W, F.W)	6		WY010001-	M6X25
6		0710 122 09	* Elbow	17		WY010001-	
7		0719 805 UA	* Elbow	1		WY010001-	
8		0710 709 02	* Tee	1		WY010001-	
9		D060 525 00	* Connector	1		WY010001-	
10		0710 117 02	* Elbow	1		WY010001-	
11		D065 093 00	* Manifold	2		WY010001-	
12		D418 943 00	* Bracket	1		WY010001-	
13		D418 944 00	* Bracket	1		WY010001-	
14		4070 551 34	* Hose Ass'y	1		WY010001-	L=1900
15		4070 551 01	* Hose Ass'y	1		WY010001-	L=1150
16		4070 551 22	* Hose Ass'y	1		WY010001-	L=1000
16-1	☆	D407 818 04	* Decal (BT)	2		WY010001-	D407 818 00
17		4070 124 09	* Hose Ass'y	1		WY010001-	L=470
18		4070 551 43	* Hose Ass'y	1		WY010001-	L=2450
18-1	☆	4405 308 01	* Decal (C1)	2		WY010001-	4405 308 00
19		D065 094 00	* Manifold	2		WY010001-	
20		4070 551 19	* Hose Ass'y	1		WY010001-	L=600
21		4070 548 68	* Hose Ass'y	1		WY010001-	L=1070
22		4070 548 57	* Hose Ass'y	1		WY010001-	L=450
23		4070 548 40	* Hose Ass'y	1		WY010001-	L=1650
23-1	☆	4405 311 02	* Decal (LP)	2		WY010001-	4405 311 00
24		4070 548 82	* Hose Ass'y	1		WY010001-	L=420
25		4070 548 69	* Hose Ass'y	1		WY010001-	L=840
25-1	☆	4405 311 01	* Decal (RP)	2		WY010001-	4405 311 00
26		4070 548 42	* Hose Ass'y	1		WY010001-	L=1670
26-1	☆	4405 312 02	* Decal (LT)	2		WY010001-	4405 312 00
27		4070 548 88	* Hose Ass'y	1		WY010001-	L=780
28		4070 548 89	* Hose Ass'y	1		WY010001-	L=2250
28-1	☆	4405 309 02	* Decal (A2)	2		WY010001-	4405 309 00
29		4070 548 61	* Hose Ass'y	1		WY010001-	L=1700
29-1	☆	4405 309 01	* Decal (A1)	2		WY010001-	4405 309 00
30		4070 548 41	* Hose Ass'y	1		WY010001-	L=1850
30-1	☆	4405 310 02	* Decal (S2)	2		WY010001-	4405 310 00
31		4070 548 35	* Hose Ass'y	1		WY010001-	L=2400
31-1	☆	4405 307 02	* Decal (B2)	2		WY010001-	4405 307 00
32		4070 548 39	* Hose Ass'y	1		WY010001-	L=2000
32-1	☆	4405 307 01	* Decal (B1)	2		WY010001-	4405 307 00
33		4070 548 65	* Hose Ass'y	1		WY010001-	L=1950
33-1	☆	4405 308 02	* Decal (C2)	2		WY010001-	4405 308 00
34		4070 548 21	* Hose Ass'y	1		WY010001-	L=2100
34-1	☆	4405 310 01	* Decal (S1)	2		WY010001-	4405 310 00
35		4070 548 70	* Hose Ass'y	1		WY010001-	L=680
36		0713 700 71	* Adapter	1		WY010001-	
37		0710 117 02	* Elbow, Long	1		WY010001-	
38		0710 113 32	* Elbow, Reducer	1		WY010001-	PF3/8XPF1/4
39		D418 948 00	* Bracket	1		WY010001-	

https://truckmanualshub.com/

KEY No.	SUP.	PART No.	DESCRIPTION	Q'TY	CHAN.	SERIAL No.	REMARKS
40		4070 782 06	* Hose Ass'y	1		WY010001-	L=500
41		0710 303 03	* Plug, Swivel	2		WY010001-	
42		0760 710 16	* Ring, O	2		WY010001-	P14-90B
43		0518 100 20	* Bolt, Treatment (W/L.W, F.W)	5		WY010001-	M10X20 P=1.25
44		D405 447 00	* Decal (For A-D)	1		WY010001-	
44-1		D405 518 00	* Decal (For A, B, G)	1		WY010001-	
45		0820 067 05	* Band, Cable	7		WY010001-	
46		0710 303 02	* Plug, Swivel	4		WY010001-	PF1/4
47		4070 551 45	* Hose Ass'y	1		WY010001-	L=950
48		D550 019 00	* Seal	1		WY010001-	L=300
49		4070 551 15	* Hose Ass'y	1		WY010001-	L=350
49-1	☆	D407 818 03	* Decal (BP)	2		WY010001-	D407 818 00
50		4070 548 25	* Hose Ass'y	1		WY010001-	L=700
50-1	☆	4405 309 03	* Decal (L1)	2		WY010001-	4405 309 00
51		4070 548 25	* Hose Ass'y	1		WY010001-	L=700
51-1	☆	4405 310 03	* Decal (L2)	2		WY010001-	4405 310 00
52		4070 548 25	* Hose Ass'y	1		WY010001-	L=700
52-1	☆	4405 309 04	* Decal (L3)	2		WY010001-	4405 309 00
53		4070 548 25	* Hose Ass'y	1		WY010001-	L=700
53-1	☆	4405 310 04	* Decal (L4)	2		WY010001-	4405 310 00
54		4070 548 06	* Hose Ass'y	1		WY010001-	L=1200
54-1	☆	4405 308 03	* Decal (R2)	2		WY010001-	4405 308 00
55		4070 548 06	* Hose Ass'y	1		WY010001-	L=1200
55-1	☆	4405 307 04	* Decal (R3)	2		WY010001-	4405 307 00
56		4070 548 19	* Hose Ass'y	1		WY010001-	L=1250
56-1	☆	4405 307 03	* Decal (R1)	2		WY010001-	4405 307 00
57		4070 548 19	* Hose Ass'y	1		WY010001-	L=1250
57-1	☆	4405 308 04	* Decal (R4)	2		WY010001-	4405 308 00
58		4070 548 08	* Hose Ass'y	1		WY010001-	L=300
58-1	☆	4405 312 01	* Decal (RT)	2		WY010001-	4405 312 00
59		D070 577 01	* Hose	1		WY010001-	
60		4080 000 09	* Clamp, Hose	1		WY010001-	
61		0820 067 09	* Band, Cable	4		WY010001-	
62		0820 067 10	* Band, Cable	1		WY010001-	
63		4580 016 00	* Pad, Rubber	1		WY010001-	
64		0518 100 25	* Bolt, Treatment (W/L.W, F.W)	1		WY010001-	M10X25 P=1.25
65		0550 120 25	* Bolt, Hex.	3		WY010001-	M12X25
66		0593 120 00	* Washer, Flat	3		WY010001-	M12
67		0590 120 00	* Washer, Lock	3		WY010001-	M12
68		D040 345 00	* Spacer	1		WY010001-	
69	#	0784 112 UA	* Valve Ass'y, Multiple (For A-D)	1		WY010001-	Sh. No. 5-15
69-1		0784 113 UA	* Valve Ass'y, Multiple (For A, B, G)	1		WY010001-	
70		D060 028 00	* Elbow	5		WY010001-	

https://truckmanualshub.com/

[Memo]

https://truckmanualshub.com/

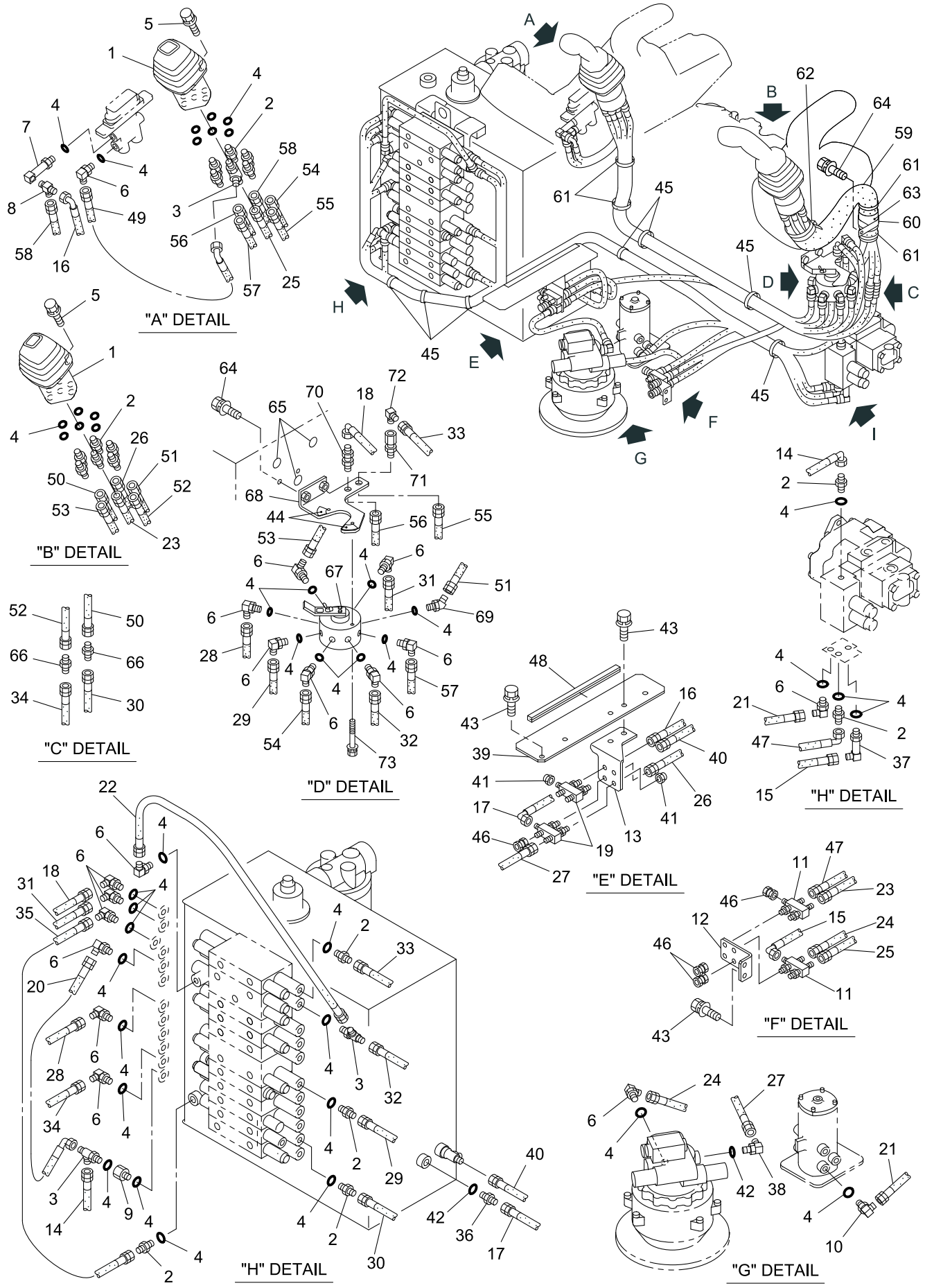

40V4-04040B-1

IHI

CONTROL PIPING ASS'Y (FOR A, F CHANGE)

MODEL 55V4

SHEET No 4-4[B]

https://truckmanualshub.com/

KEY No.	SUP.	PART No.	DESCRIPTION	Q'TY	CHAN.	SERIAL No.	REMARKS
0	×	F342 640 00	Piping Ass'y, Control	1		WY010001-	
1	#	0783 964 UA	* Valve Assy Remote Control	2		WY010001-	Sh. No. 5-5
2		0713 700 70	* Connector	17		WY010001-	
3		0710 713 09	* Tee	3		WY010001-	
4		0760 710 12	* Ring, O	42		WY010001-	P11-90B
5		0517 060 25	* Bolt, Treatment (W/L.W, F.W)	6		WY010001-	M6X25
6		0710 122 09	* Elbow	17		WY010001-	
7		0719 805 UA	* Elbow	1		WY010001-	
8		0710 709 02	* Tee	1		WY010001-	
9		D060 525 00	* Connector	1		WY010001-	
10		0710 117 02	* Elbow	1		WY010001-	
11		D065 093 00	* Manifold	2		WY010001-	
12		D418 943 00	* Bracket	1		WY010001-	
13		D418 944 00	* Bracket	1		WY010001-	
14		4070 551 34	* Hose Ass'y	1		WY010001-	L=1900
15		4070 551 01	* Hose Ass'y	1		WY010001-	L=1150
16		4070 551 22	* Hose Ass'y	1		WY010001-	L=1000
16-1	☆	D407 818 04	* Decal (BT)	2		WY010001-	D407 818 00
17		4070 124 09	* Hose Ass'y	1		WY010001-	L=470
18		4070 551 43	* Hose Ass'y	1		WY010001-	L=2450
18-1	☆	4405 308 01	* Decal (C1)	2		WY010001-	4405 308 00
19		D065 094 00	* Manifold	2		WY010001-	
20		4070 551 19	* Hose Ass'y	1		WY010001-	L=600
21		4070 548 68	* Hose Ass'y	1		WY010001-	L=1070
22		4070 548 57	* Hose Ass'y	1		WY010001-	L=450
23		4070 548 40	* Hose Ass'y	1		WY010001-	L=1650
23-1	☆	4405 311 02	* Decal (LP)	2		WY010001-	4405 311 00
24		4070 548 82	* Hose Ass'y	1		WY010001-	L=420
25		4070 548 69	* Hose Ass'y	1		WY010001-	L=840
25-1	☆	4405 311 01	* Decal (RP)	2		WY010001-	4405 311 00
26		4070 548 42	* Hose Ass'y	1		WY010001-	L=1670
26-1	☆	4405 312 02	* Decal (LT)	2		WY010001-	4405 312 00
27		4070 548 88	* Hose Ass'y	1		WY010001-	L=780
28		4070 548 89	* Hose Ass'y	1		WY010001-	L=2250
28-1	☆	4405 309 02	* Decal (A2)	2		WY010001-	4405 309 00
29		4070 548 61	* Hose Ass'y	1		WY010001-	L=1700
29-1	☆	4405 309 01	* Decal (A1)	2		WY010001-	4405 309 00
30		4070 548 41	* Hose Ass'y	1		WY010001-	L=1850
30-1	☆	4405 310 02	* Decal (S2)	2		WY010001-	4405 310 00
31		4070 548 35	* Hose Ass'y	1		WY010001-	L=2400
31-1	☆	4405 307 02	* Decal (B2)	2		WY010001-	4405 307 00
32		4070 548 39	* Hose Ass'y	1		WY010001-	L=2000
32-1	☆	4405 307 01	* Decal (B1)	2		WY010001-	4405 307 00
33		4070 548 65	* Hose Ass'y	1		WY010001-	L=1950
33-1	☆	4405 308 02	* Decal (C2)	2		WY010001-	4405 308 00
34		4070 548 21	* Hose Ass'y	1		WY010001-	L=2100
34-1	☆	4405 310 01	* Decal (S1)	2		WY010001-	4405 310 00
35		4070 548 70	* Hose Ass'y	1		WY010001-	L=680
36		0713 700 71	* Adapter	1		WY010001-	
37		0710 117 02	* Elbow, Long	1		WY010001-	
38		0710 113 32	* Elbow, Reducer	1		WY010001-	PF3/8XPF1/4
39		D418 948 00	* Bracket	1		WY010001-	

https://truckmanualshub.com/

KEY No.	SUP.	PART No.	DESCRIPTION	Q'TY	CHAN.	SERIAL No.	REMARKS
40		4070 782 06	* Hose Ass'y	1		WY010001-	L=500
41		0710 303 03	* Plug, Swivel	2		WY010001-	
42		0760 710 16	* Ring, O	2		WY010001-	P14-90B
43		0518 100 20	* Bolt, Treatment (W/L.W, F.W)	5		WY010001-	M10X20 P=1.25
44		4448 987 00	* Decal (For A, F)	1		WY010001-	
45		0820 067 05	* Band, Cable	7		WY010001-	
46		0710 303 02	* Plug, Swivel	4		WY010001-	PF1/4
47		4070 551 45	* Hose Ass'y	1		WY010001-	L=950
48		D550 019 00	* Seal	1		WY010001-	L=300
49		4070 551 15	* Hose Ass'y	1		WY010001-	L=350
49-1	☆	D407 818 03	* Decal (BP)	2		WY010001-	D407 818 00
50		4070 548 25	* Hose Ass'y	1		WY010001-	L=700
50-1	☆	4405 309 03	* Decal (L1)	2		WY010001-	4405 309 00
51		4070 548 25	* Hose Ass'y	1		WY010001-	L=700
51-1	☆	4405 310 03	* Decal (L2)	2		WY010001-	4405 310 00
52		4070 548 25	* Hose Ass'y	1		WY010001-	L=700
52-1	☆	4405 309 04	* Decal (L3)	2		WY010001-	4405 309 00
53		4070 548 25	* Hose Ass'y	1		WY010001-	L=700
53-1	☆	4405 310 04	* Decal (L4)	2		WY010001-	4405 310 00
54		4070 548 06	* Hose Ass'y	1		WY010001-	L=1200
54-1	☆	4405 308 03	* Decal (R2)	2		WY010001-	4405 308 00
55		4070 548 06	* Hose Ass'y	1		WY010001-	L=1200
55-1	☆	4405 307 04	* Decal (R3)	2		WY010001-	4405 307 00
56		4070 548 19	* Hose Ass'y	1		WY010001-	L=1250
56-1	☆	4405 307 03	* Decal (R1)	2		WY010001-	4405 307 00
57		4070 548 19	* Hose Ass'y	1		WY010001-	L=1250
57-1	☆	4405 308 04	* Decal (R4)	2		WY010001-	4405 308 00
58		4070 548 08	* Hose Ass'y	1		WY010001-	L=300
58-1	☆	4405 312 01	* Decal (RT)	2		WY010001-	4405 312 00
59		D070 577 01	* Hose	1		WY010001-	
60		4080 000 09	* Clamp, Hose	1		WY010001-	
61		0820 067 09	* Band, Cable	4		WY010001-	
62		0820 067 10	* Band, Cable	1		WY010001-	
63		4580 016 00	* Pad, Rubber	1		WY010001-	
64		0518 100 25	* Bolt, Treatment (W/L.W, F.W)	3		WY010001-	M10X25 P=1.25
65		D405 272 00	* Seal	3		WY010001-	
66		0712 326 01	* Adapter	2		WY010001-	
67	#	0756 094 UA	* Valve Ass'y, Selector	1		WY010001-	Sh. No. 5-15[B]
68		D418 583 00	* Bracket	1		WY010001-	
69		0710 121 00	* Elbow, 45	1		WY010001-	
70		D060 137 00	* Adapter	1		WY010001-	
71		0712 325 02	* Adapter	1		WY010001-	
72		0712 310 50	* Elbow	1		WY010001-	
73		0517 060 60	* Bolt, Treatment (W/L.W, F.W)	2		WY010001-	M6X60

https://truckmanualshub.com/

[Memo]

https://truckmanualshub.com/

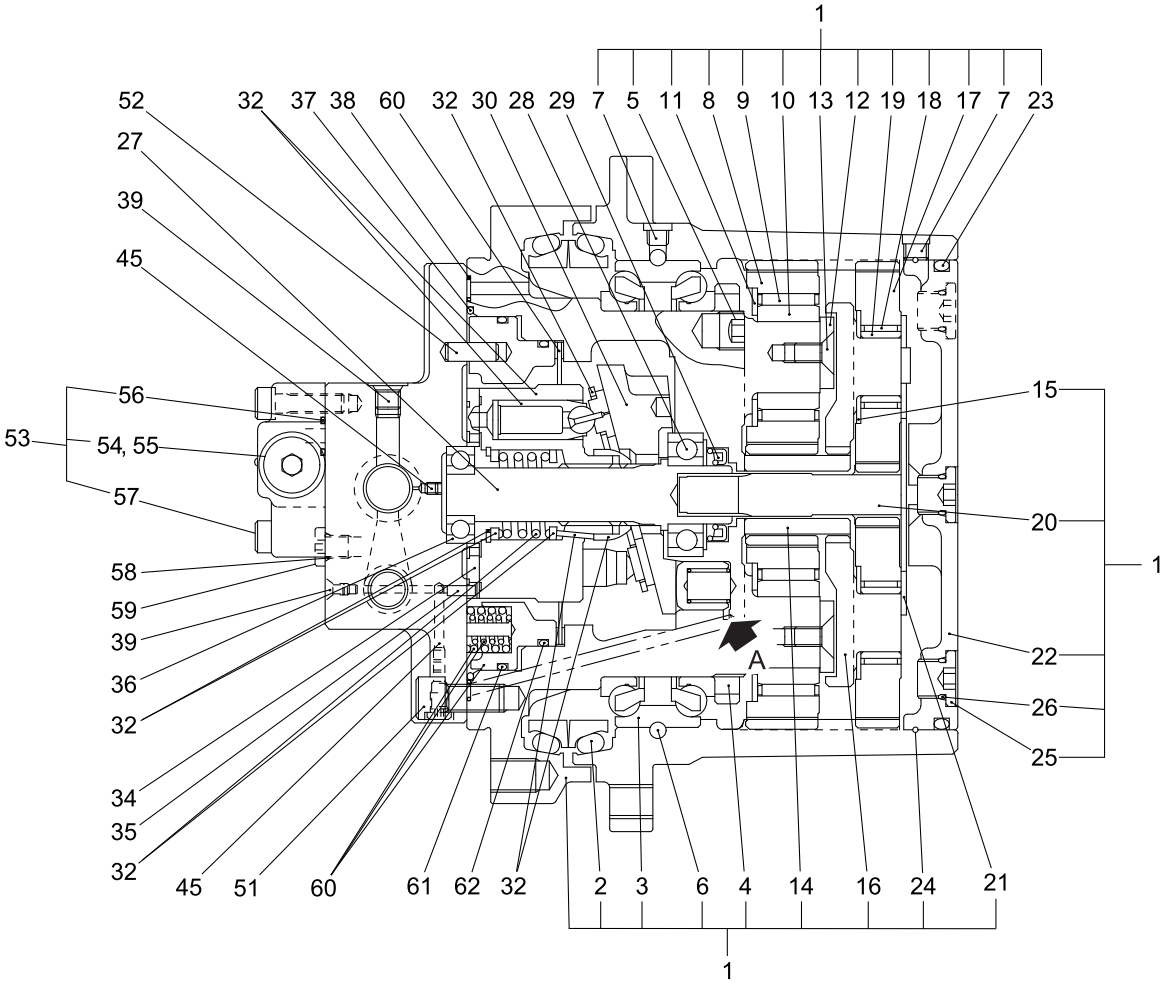

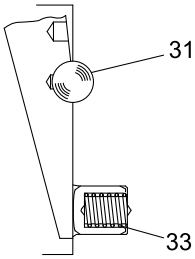

"A" DETAIL

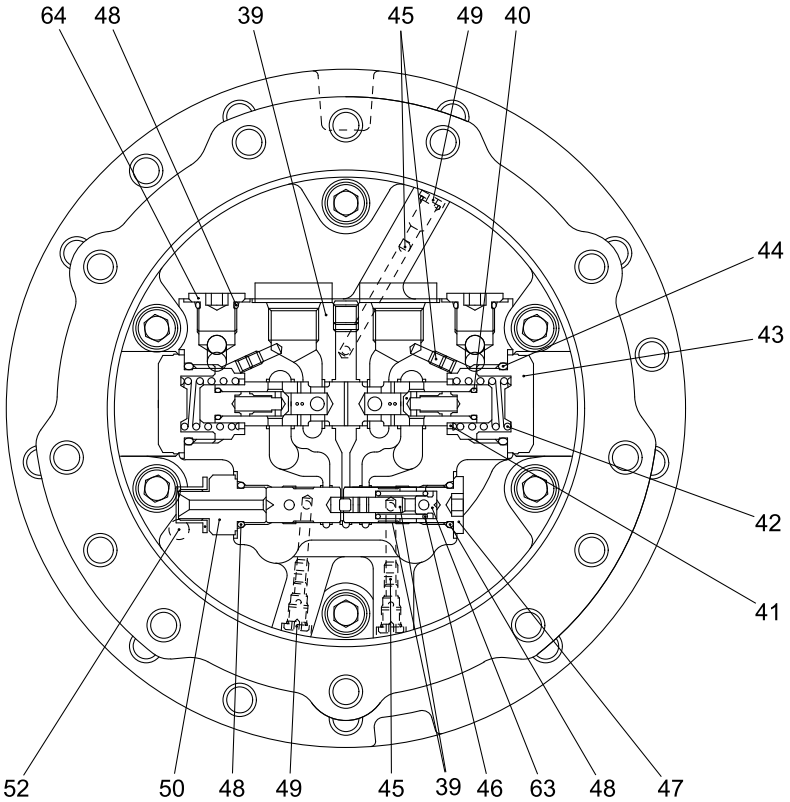

0781372UA-1

https://truckmanualshub.com/

KEY No.	SUP.	PART No.	DESCRIPTION	Q'TY	CHAN.	SERIAL No.	REMARKS
0		0781 372 UA	Motor Ass'y, Traction	2		WY010001-	
1		0781 372 91	* Reduction Gear Ass'y	1		WY010001-	
2		0753 713 05	** Seal, Floating	2		WY010001-	
3		0757 606 04	** Bearing	1		WY010001-	
4		0781 372 01	** Nut, Ring	1		WY010001-	
5		0781 133 02	** Plug	2		WY010001-	
6		0609 016 10	** Ball, Steel	99		WY010001-	d=1/4
7		0710 201 01	** Plug	2		WY010001-	PT1/8
8		0781 372 02	** Gear, Planetary (B)	4		WY010001-	
9		0781 372 03	** Bearing	4		WY010001-	
10		0781 372 04	** Race, Inner	4		WY010001-	
11		0781 133 07	** Washer, Thrust	4		WY010001-	
12		0781 372 05	** Plate, Thrust	1		WY010001-	
13		0781 238 20	** Screw, Flat Head	4		WY010001-	
14		0781 372 06	** Gear, Sun	1		WY010001-	
15		0781 372 07	** Washer, Thrust	3		WY010001-	
16		0781 372 08	** Holder	1		WY010001-	
17		0781 372 09	** Gear, Planetary (A)	3		WY010001-	
18		0757 606 20	** Bearing	3		WY010001-	
19		0781 133 11	** Race, Inner	3		WY010001-	
20		0781 372 10	** Gear, Drive	1		WY010001-	
21		0781 372 93	** Plate, Thrust	AR		WY010001-	
22		0781 372 11	** Cover	1		WY010001-	
23		0760 716 90	** Ring, O	1		WY010001-	G190-90B
24		0757 606 29	** Wire	1		WY010001-	
25		0753 764 49	** Plug	3		WY010001-	
26		0760 710 16	** Ring, O	3		WY010001-	P14-90B
27		0781 372 12	* Shaft	1		WY010001-	
28		0753 638 11	* Bearing	1		WY010001-	
29		0781 372 13	* Seal, Oil	1		WY010001-	
30		0781 372 14	* Plate, Swash	1		WY010001-	
31		0781 133 17	* Ball, Steel	2		WY010001-	
32		0781 372 94	* Block Ass'y, Cylinder	1		WY010001-	
33		0781 372 15	* Spring	1		WY010001-	
34		0753 764 40	* Plate, Valve	1		WY010001-	
35		0753 795 11	* Pin	1		WY010001-	
36		0753 764 41	* Bearing	1		WY010001-	
37		0760 212 58	* Ring, O	1		WY010001-	258-70B
38		0760 710 07	* Ring, O	4		WY010001-	P7-90B
39		0782 372 95	* Plate Ass'y, Base	1		WY010001-	
40		0760 710 10	** Ring, O	2		WY010001-	P10-90B
41		0751 960 03	* Seat, Spring	2		WY010001-	
42		0753 563 63	* Spring	1		WY010001-	
43		0781 173 08	* Cap	2		WY010001-	
44		0760 710 30	* Ring, O	2		WY010001-	P29-90B
45		0753 764 51	* Orifice	10		WY010001-	
46		0781 372 16	* Spring	1		WY010001-	
47		0781 372 17	* Plug	1		WY010001-	PF3/8
48		0760 710 16	* Ring, O	4		WY010001-	P14-90B
49		0781 375 22	* Plug	3		WY010001-	
50		0781 173 10	* Plug	1		WY010001-	
51		0562 120 25	* Bolt, Socket Head	6		WY010001-	M12X25

https://truckmanualshub.com/

KEY No.	SUP.	PART No.	DESCRIPTION	Q'TY	CHAN.	SERIAL No.	REMARKS
52		0753 563 53	* Pin	4		WY010001-	
53		0781 372 92	* Valve Ass'y	1		WY010001-	
54		0753 764 49	** Plug	2		WY010001-	PT3/8
55		0760 710 16	** Ring, O	2		WY010001-	P14-90B
56		0760 710 14	** Ring, O	3		WY010001-	P12-90B
57		0562 080 30	** Bolt, Socket Head	3		WY010001-	M8X30
58		0760 710 08	* Ring, O	2		WY010001-	P8-90B
59		0757 785 06	* Plug	1		WY010001-	
60		0781 372 96	* Piston, Brake	1		WY010001-	
61		0781 372 18	* Ring, O	1		WY010001-	
62		0781 372 19	* Ring, O	1		WY010001-	
63		0781 372 20	* Seat, Spring	1		WY010001-	
64		0753 764 49	* Plug	2		WY010001-	

https://truckmanualshub.com/

[Memo]

https://truckmanualshub.com/

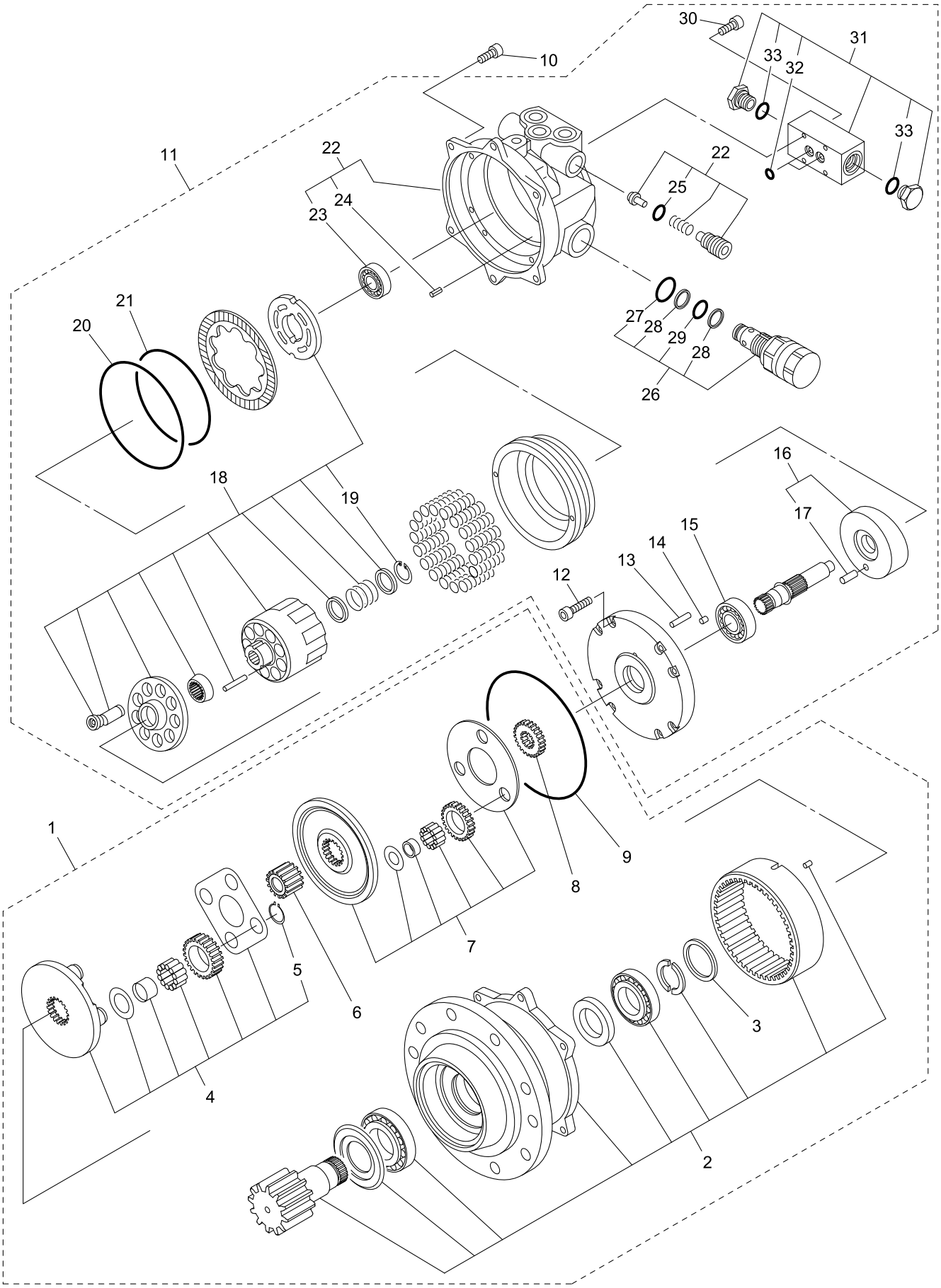

0781373UA-1

https://truckmanualshub.com/

KEY No.	SUP.	PART No.	DESCRIPTION	Q'TY	CHAN.	SERIAL No.	REMARKS
0		0781 373 UA	Swing Motor Ass'y	1		WY010001-	
1		0781 261 92	* Gear Ass'y, Reduction	1		WY010001-	
2		0781 261 94	** Pinion Ass'y	1		WY010001-	
3		0781 261 03	** Ring	1		WY010001-	
4		0781 261 95	** Carrier Ass'y	1		WY010001-	
5		0493 510 22	*** Ring, Snap	4		WY010001-	d=22
6		0781 261 01	** Gear	1		WY010001-	
7		0781 250 96	** Carrier Ass'y	1		WY010001-	
8		0781 250 02	** Gear	1		WY010001-	
9		0760 311 66	** Ring, O	1		WY010001-	166-90B
10		0562 080 25	** Bolt, Socket Head	6		WY010001-	M8X25
11		0781 373 91	* Motor Ass'y	1		WY010001-	
12		0562 100 25	** Bolt, Socket Head	8		WY010001-	M10X25
13		0753 636 19	** Pin	3		WY010001-	
14		0757 618 20	** Filter	1		WY010001-	
15		0630 600 44	** Bearing	1		WY010001-	#6004Z
16		0781 313 92	** Plate Ass'y, Swash	1		WY010001-	
17		0494 808 15	*** Pin	1		WY010001-	d=8X15
18		0781 261 97	** Barel Ass'y, Cylinder	1		WY010001-	
19		0493 500 28	*** Ring, Snap	1		WY010001-	d=28
20		0760 716 25	** Ring, O	1		WY010001-	G125-90B
21		0760 716 10	** Ring, O	1		WY010001-	G110-90B
22		0781 261 96	** Body Ass'y	1		WY010001-	
23		0630 620 10	*** Bearing	1		WY010001-	#6201
24		0494 608 12	*** Pin, Spring	1		WY010001-	d=5X12
25		0760 710 12	*** Ring, O	1		WY010001-	P11-90B
26		0781 373 92	** Valve Ass'y, Relief	2		WY010001-	
27		0760 710 22	*** Ring, O	1		WY010001-	P22-90B
28		0762 120 16	*** Ring, Back-up	2		WY010001-	P14-T2
29		0760 710 16	*** Ring, O	1		WY010001-	P14-90B
30		0562 060 20	** Bolt, Socket Head	4		WY010001-	M6X20
31		0757 641 92	** Valve Ass'y, By-pass	1		WY010001-	
32		0760 710 09	*** Ring, O	2		WY010001-	P9-90B
33		0760 710 19	*** Ring, O	2		WY010001-	P18-90B

5

https://truckmanualshub.com/

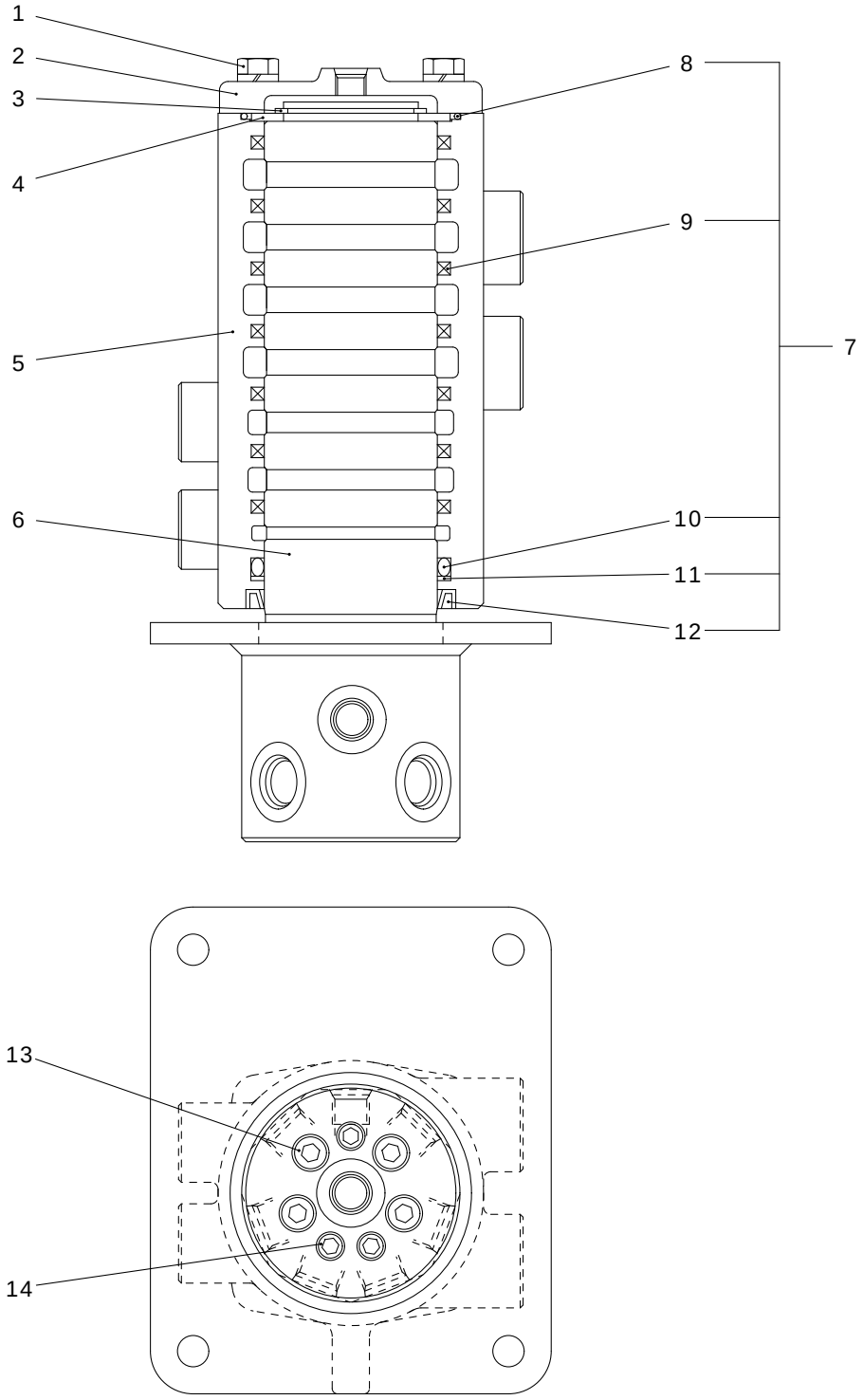

0713439UA-1

https://truckmanualshub.com/

KEY No.	SUP.	PART No.	DESCRIPTION	Q'TY	CHAN.	SERIAL No.	REMARKS
0		0713 439 UA	Joint Ass'y, Rotary	1		WY010001-	
1		0519 080 25	* Bolt, Treatment (W/L.W)	4		WY010001-	M8X25
2	△	0713 439 10	* Cover	1		WY010001-	
3		0493 510 55	* Ring, Snap	1		WY010001-	d=55
4		0713 439 07	* Ring	1		WY010001-	
5	△	0713 439 02	* Hub	1		WY010001-	
6	△	0713 439 01	* Shaft	1		WY010001-	
7		0713 431 91	* Kit, Seal	1		WY010001-	
8	×	0760 615 85	** Ring, O	1		WY010001-	G85-70B
9	×	0713 431 02	** Seal, Oil	7		WY010001-	
10	×	0760 710 70	** Ring, O	1		WY010001-	P70-90B
11	×	0762 120 70	** Ring, Back-up	1		WY010001-	P70-T2
12	×	0755 861 26	** Seal, Dust	1		WY010001-	
13		0710 200 10	* Plug	4		WY010001-	PT3/8
14		0710 200 14	* Plug	3		WY010001-	PT1/4

5

https://truckmanualshub.com/

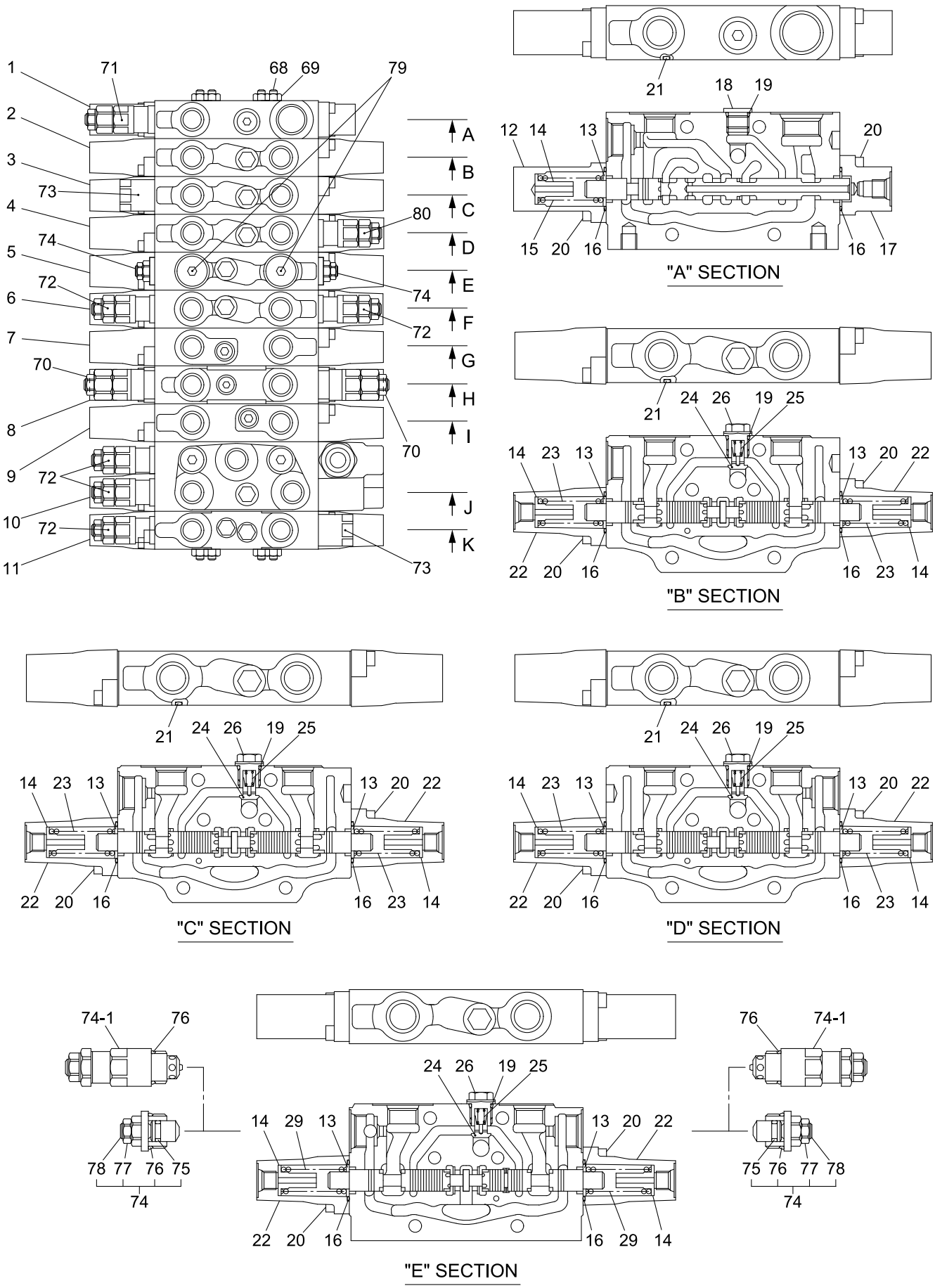

0784015UA-1

https://truckmanualshub.com/

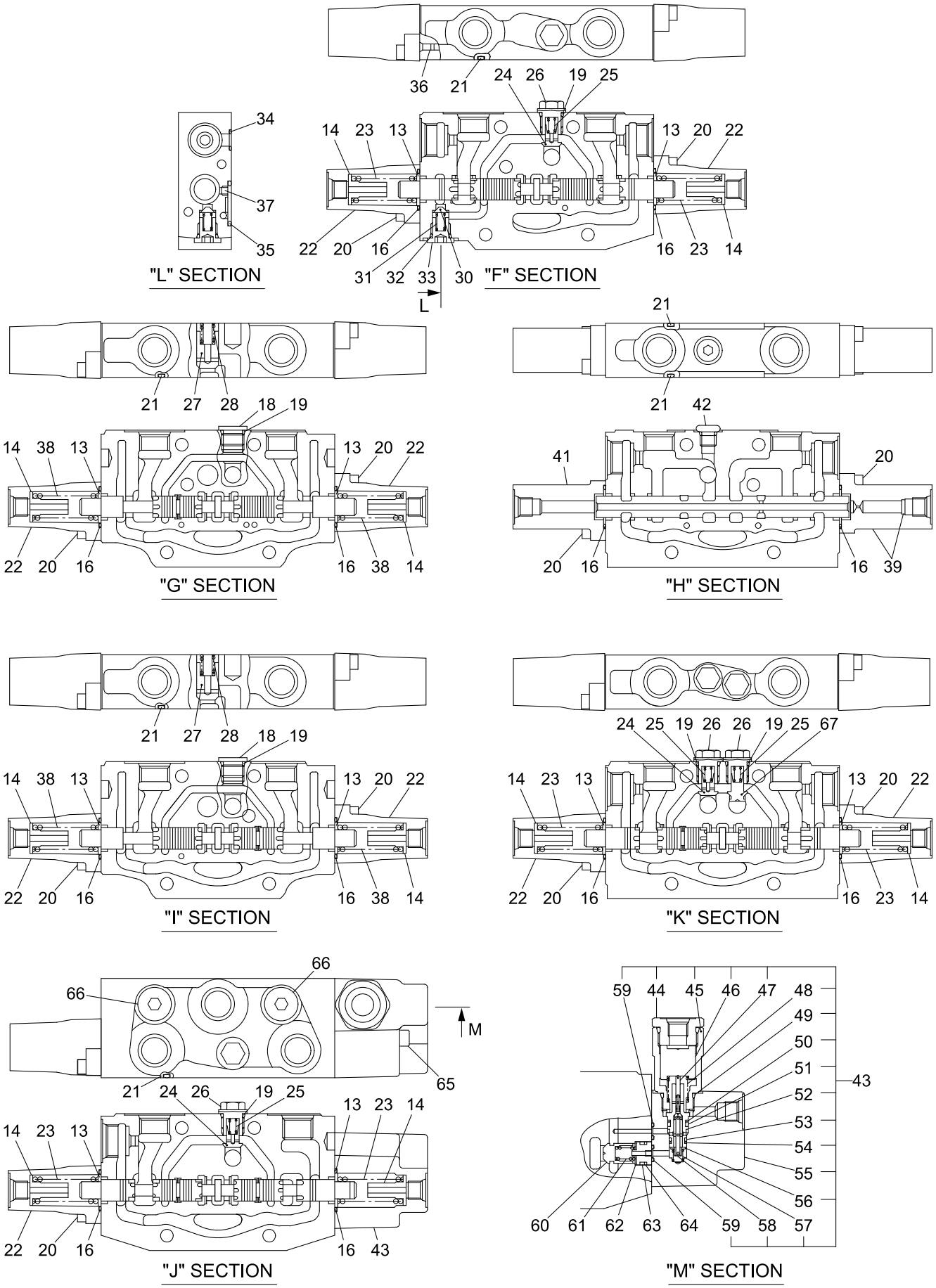

https://truckmanualshub.com/

KEY No.	SUP.	PART No.	DESCRIPTION	Q'TY	CHAN.	SERIAL No.	REMARKS
0		0784 015 UA	Valve Ass'y, Control	1		WY010001-	
1		0784 015 90	* Block Ass'y	1		WY010001-	
2		0784 015 91	* Block Ass'y, Swing	1		WY010001-	
3		0784 015 92	* Block Ass'y, Boom Swing	1		WY010001-	
4		0784 015 93	* Block Ass'y, Blade	1		WY010001-	
5		0784 015 94	* Block Ass'y, Spare	1		WY010001-	
6		0784 015 95	* Block Ass'y, Arm	1		WY010001-	
7		0784 015 96	* Block Ass'y, Travel (L.H.)	1		WY010001-	
8		0783 974 95	* Block Ass'y, Inlet	1		WY010001-	
9		0784 015 97	* Block Ass'y, Travel (R.H.)	1		WY010001-	
10		0784 015 98	* Block Ass'y, Boom	1		WY010001-	
11		0784 015 99	* Block Ass'y, Backet	1		WY010001-	
12		0783 677 02	** Cap	1		WY010001-	
13		0756 339 05	** Seat, Spring	19		WY010001-	
14		0783 677 03	** Seat, Spring	19		WY010001-	
15		0783 677 04	** Spring	1		WY010001-	
16		0756 339 08	** Ring, O	22		WY010001-	S24-70B
17		0783 974 03	** Cap	1		WY010001-	
18		0783 842 02	** Plug	3		WY010001-	
19		0783 677 06	** Ring, O	11		WY010001-	
20		0562 060 18	** Bolt, Socket Head	42		WY010001-	M6X18
21		0760 615 70	** Ring, O	10		WY010001-	G70-70B
22		0783 677 07	** Cap	17		WY010001-	
23		0783 970 01	** Spring	12		WY010001-	
24		0783 677 09	** Poppet	7		WY010001-	
25		0783 677 10	** Spring	8		WY010001-	
26		0783 677 05	** Plug	8		WY010001-	
27		0756 339 20	** Poppet	2		WY010001-	
28		0753 904 11	** Spring	2		WY010001-	
29		0783 970 01	** Spring	2		WY010001-	
30		0783 677 13	** Poppet	1		WY010001-	
31		0756 339 17	** Spring	1		WY010001-	
32		0760 710 12	** Ring, O	1		WY010001-	P11-90B
33		0783 677 14	** Plug	1		WY010001-	
34		0760 710 10	** Ring, O	1		WY010001-	P10-90B
35		0760 710 20	** Ring, O	1		WY010001-	P20-90B
36		0783 677 15	** Plug	1		WY010001-	
37		0783 677 16	** Plug, Orifice	1		WY010001-	
38		0783 970 01	** Spring	4		WY010001-	
39		0783 974 04	** Cap Ass'y	1		WY010001-	
41		0783 677 18	** Cap	1		WY010001-	
42		0783 677 83	** Plug Ass'y	1		WY010001-	
42-1		0760 710 08	*** Ring, O	1		WY010001-	P8-90B
43		0783 846 83	** Valve Ass'y, Anti drift	1		WY010001-	
44		0756 339 80	*** Plug Ass'y	1		WY010001-	
45		0783 677 24	*** Plug	1		WY010001-	
46		0783 749 02	*** Piston	1		WY010001-	
47		0783 677 26	*** Spool	1		WY010001-	
48		0783 677 28	*** Spring	1		WY010001-	
49		0753 101 09	*** Ring, O	1		WY010001-	
50		0762 120 11	*** Ring, Back-up	1		WY010001-	P10A-T2
51	☆	0760 610 11	*** Ring, O (P10A-70B)	1		WY010001-	0760 710 11

https://truckmanualshub.com/

KEY No.	SUP.	PART No.	DESCRIPTION	Q'TY	CHAN.	SERIAL No.	REMARKS
52		0783 677 27	*** Sleeve	1		WY010001-	
53	☆	0760 610 09	*** Ring, O (P9-70B)	1		WY010001-	0760 710 09
54		0762 120 09	*** Ring, Back-up	1		WY010001-	P9-T2
55		0783 749 01	*** Body	1		WY010001-	
56		0783 677 30	*** Seat, Spring	1		WY010001-	
57		0783 677 29	*** Spring	1		WY010001-	
58		0783 677 23	*** Poppet	1		WY010001-	
59		0760 710 07	*** Ring, O	2		WY010001-	P7-90B
60		0783 677 21	** Poppet	1		WY010001-	
61		0756 339 25	** Spring	1		WY010001-	
62		0783 677 22	** Spacer	1		WY010001-	
63		0760 610 15	** Ring, O	1		WY010001-	P12.5-70B
64		0762 120 15	** Ring, Back-up	1		WY010001-	P12.5-T2
65		0562 060 50	** Bolt, Socket Head	5		WY010001-	M6X50
66		0783 646 83	** Plug Ass'y	2		WY010001-	
66-1		0760 710 16	*** Ring, O	1		WY010001-	P14-90B
67		0783 677 31	** Poppet	1		WY010001-	
68		0783 677 01	* Rod, Tie	4		WY010001-	
69		0580 080 00	* Nut, Hex.	8		WY010001-	M8
70		0784 015 88	* Valve Ass'y, Main Relief	2		WY010001-	24.5MPa-60L
70-1		0760 319 10	** Ring, O	1		WY010001-	910-90B
71		0784 015 87	* Valve Ass'y, Relief	1		WY010001-	20.6MPa-44L
71-1		0760 319 10	** Ring, O	1		WY010001-	910-90B
72		0784 015 86	* Valve Ass'y, Relief	5		WY010001-	27.4MPa-10L
72-1		0760 319 10	** Ring, O	1		WY010001-	910-90B
73		0783 846 88	* Valve Ass'y, Anti Void	2		WY010001-	
73-1		0760 319 10	** Ring, O	1		WY010001-	910-90B
74		0783 646 85	* Valve Ass'y, Shut-off	2		WY010001-	
74-1		0785 606 UA	* Valve Ass'y, Over Load Relief	2		WY010001-	Option 13.7MPa-100L
74-2		0785 607 UA	* Valve Ass'y, Over Load Relief	2		WY010001-	Option 17.2MPa-100L
75	☆	0760 610 11	** Ring, O (P10A-70B)	1		WY010001-	0760 710 11
76		0760 319 10	** Ring, O	1		WY010001-	910-90B
77		0544 100 00	** Nut, Hex.	1		WY010001-	M10
78		0561 100 20	** Screw, Set	1		WY010001-	M10X20
79		0783 646 84	* Plug Ass'y	2		WY010001-	
79-1		0760 710 19	** Ring, O	1		WY010001-	P18-90B
80		0784 015 85	* Valve Ass'y, Relief	1		WY010001-	24.5MPa-10L
80-1		0760 319 10	** Ring, O	1		WY010001-	910-90B

https://truckmanualshub.com/

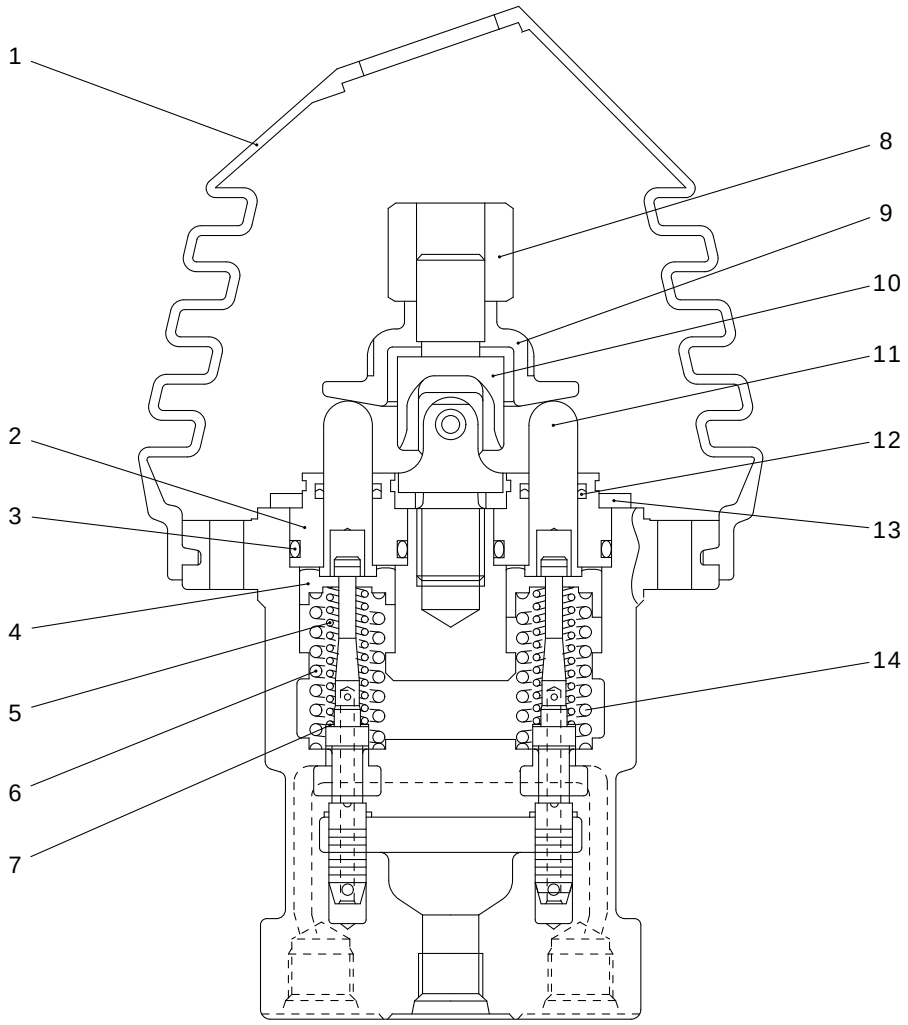

0783964UA-1
0783941UA-1

https://truckmanualshub.com/

KEY No.	SUP.	PART No.	DESCRIPTION	Q'TY	CHAN.	SERIAL No.	REMARKS
0		0783 964 UA	Valve Ass'y, Remote Control	2		WY010001-	
1		0783 771 07	* Boot	1		WY010001-	
2		0756 735 09	* Plug	4		WY010001-	
3		0760 710 20	* Ring, O	4		WY010001-	P20-90B
4		0783 700 08	* Seat, Spring	4		WY010001-	
5		0783 964 01	* Spring	4		WY010001-	
6		0783 700 09	* Spring (No.2, 4, Ports)	2		WY010001-	
7		0756 735 15	* Washer	4		WY010001-	
8		0783 771 03	* Nut, Adjusting	1		WY010001-	
9		0783 700 12	* Plate	1		WY010001-	
10		0756 303 07	* Joint	1		WY010001-	
11		0756 744 11	* Rod, Push	4		WY010001-	
12		0756 611 13	* Seal	4		WY010001-	
13		0783 756 01	* Plate	1		WY010001-	
14		0783 700 10	* Spring (No.1, 3, Ports)	2		WY010001-	

https://truckmanualshub.com/

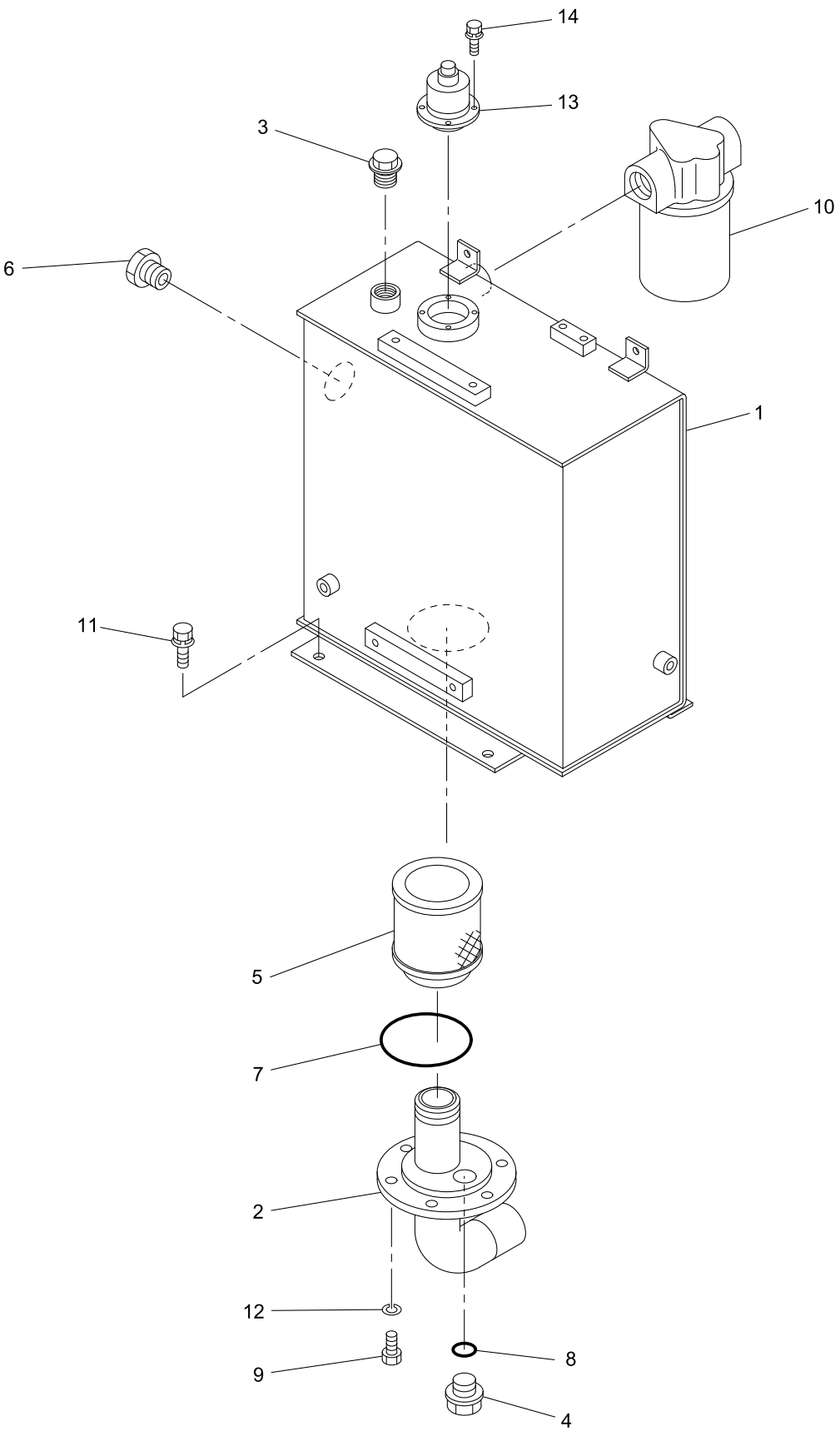

40V4-050600-1

https://truckmanualshub.com/

KEY No.	SUP.	PART No.	DESCRIPTION	Q'TY	CHAN.	SERIAL No.	REMARKS
0	×	F342 639 00	Tank Ass'y, Hydraulic Oil	1		WY010001-	
1	△	D284 241 00	* Tank, Hydraulic Oil	1		WY010001-	
2		D286 344 00	* Tube	1		WY010001-	
3		4072 887 00	* Plug	1		WY010001-	
4		4077 036 00	* Plug, Drain	1		WY010001-	
5		0759 106 UA	* Strainer, Suction	1		WY010001-	
6		4079 027 00	* Gauge, Level	1		WY010001-	
7		0760 711 30	* Ring, O	1		WY010001-	P130-90B
8		0760 312 11	* Ring, O	1		WY010001-	211-90B
9		0555 100 20	* Bolt, Treatment	6		WY010001-	M10X20
10		0759 115 UA	* Filter Ass'y, Return	1		WY010001-	
10-1		0755 142 03	** Cartridge Ass'y	1		WY010001-	
10-2		0759 114 UA	** Valve Ass'y	1		WY010001-	
11		0518 120 25	* Bolt, Treatment (W/L.W, F.W)	4		WY010001-	M12X25 P=1.25
12		0590 100 00	* Washer, Lock	6		WY010001-	M10
13		0787 305 UA	* Breather, Air	1		WY010001-	
14		0517 060 16	* Bolt, Treatment (W/L.W, F.W)	4		WY010001-	M6X16

5

https://truckmanualshub.com/

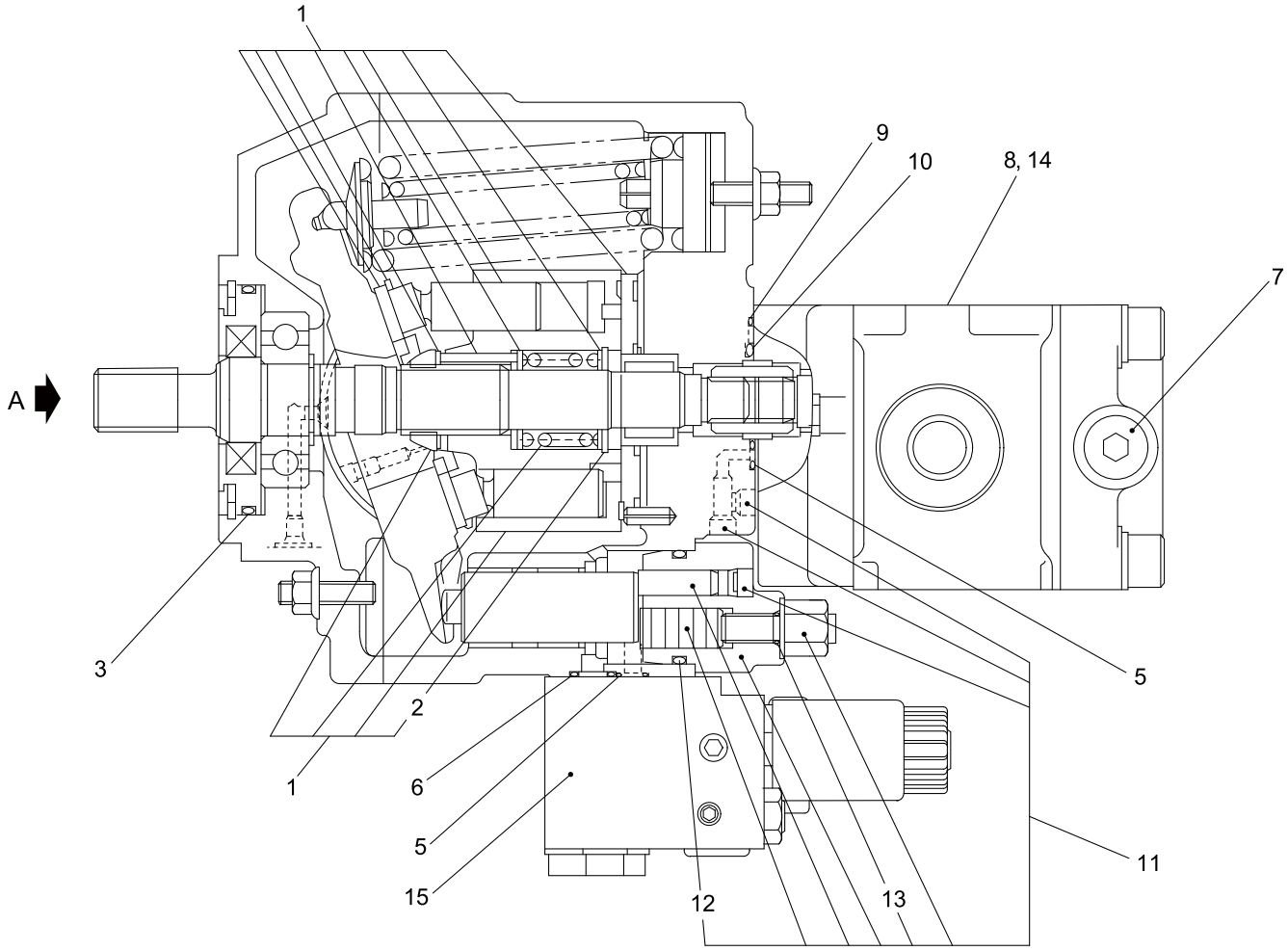

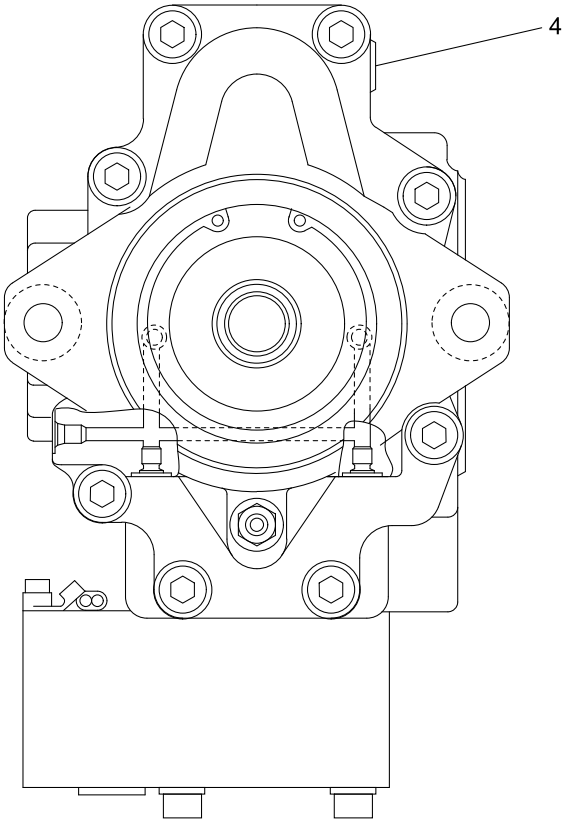

0780162UA-1

"A" VIEW

https://truckmanualshub.com/

KEY No.	SUP.	PART No.	DESCRIPTION	Q'TY	CHAN.	SERIAL No.	REMARKS
0		0780 162 UA	Pump Ass'y, Oil	1		WY010001-	
1		0780 162 91	* Cylinder Ass'y	1		WY010001-	
2		0493 500 35	** Ring, Snap	1		WY010001-	d=35
3		0760 715 75	* Ring, O	1		WY010001-	G75-90B
4		0760 710 12	* Ring, O	1		WY010001-	P11-90B
5		0760 710 08	* Ring, O	2		WY010001-	P8-90B
6		0760 710 14	* Ring, O	1		WY010001-	P12-90B
7		0760 710 16	* Ring, O	1		WY010001-	P14-90B
8		0760 710 30	* Ring, O	1		WY010001-	P29-90B
9		0760 710 07	* Ring, O	1		WY010001-	P7-90B
10		0760 715 55	* Ring, O	1		WY010001-	G55-90B
11		0780 162 92	* Sleeve Ass'y	1		WY010001-	
12		0760 715 35	** Ring, O	1		WY010001-	G35-90B
13		0760 710 08	** Ring, O	1		WY010001-	P8-90B
14		0780 162 93	* Pump Ass'y, Gear	1		WY010001-	
15		0780 162 94	* Valve Ass'y	1		WY010001-	

https://truckmanualshub.com/

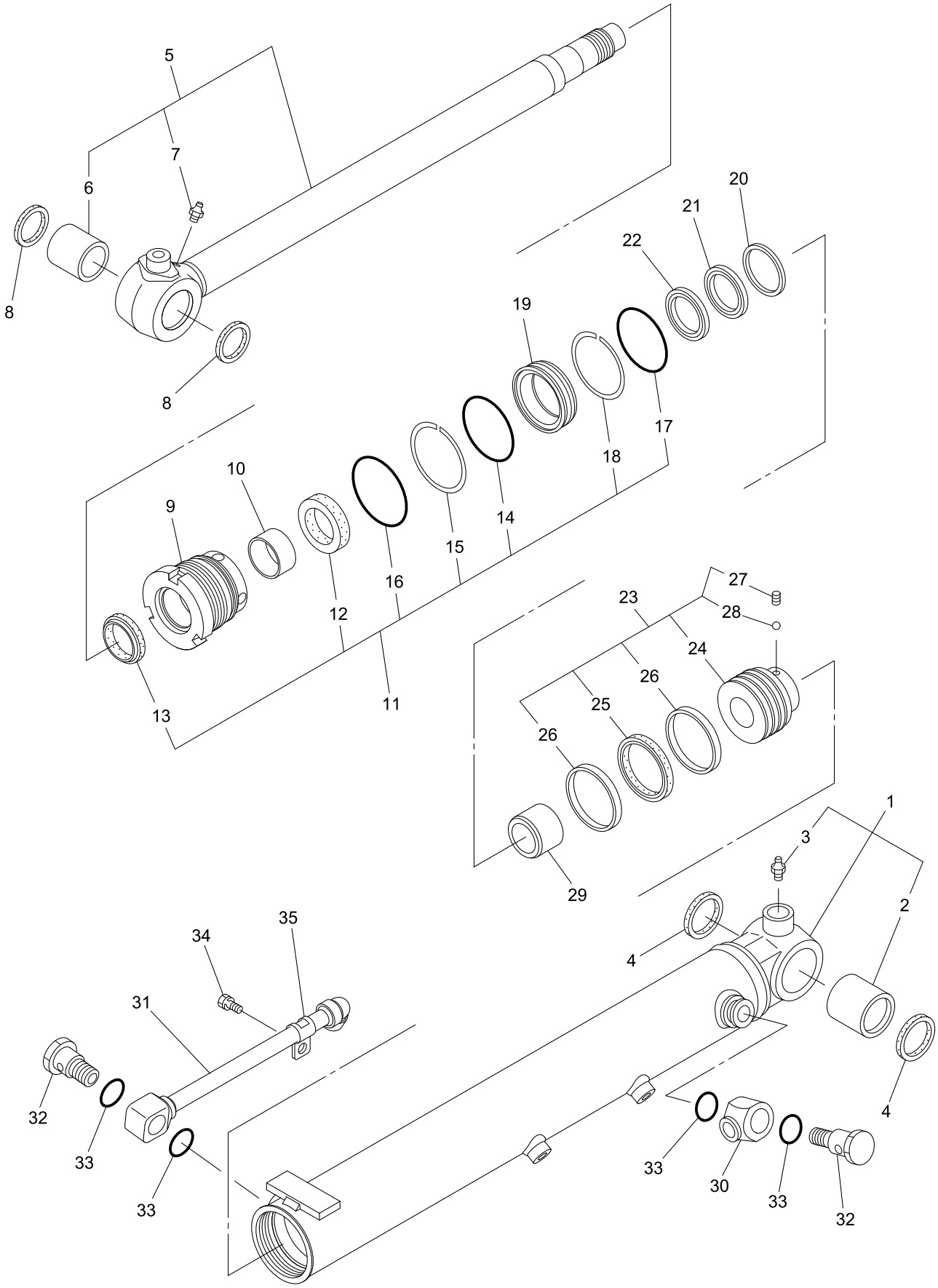

0782605UA-1
0782604UA-1

IHI

BOOM CYLINDER ASS'Y

MODEL 55V4

SHEET No 5-8

https://truckmanualshub.com/

KEY No.	SUP.	PART No.	DESCRIPTION	Q'TY	CHAN.	SERIAL No.	REMARKS
0		0782 604 UA	Cylinder Ass'y, Boom	1		WY010001-	
1	×	**** *** **	* Tube Ass'y, Cylinder	1		WY010001-	
2		0782 605 09	** Bushing	1		WY010001-	
3		0728 111 15	** Nipple, Grease	1		WY010001-	PT1/8
4		0765 033 28	* Seal, Dust	2		WY010001-	
5		0782 604 02	* Rod Ass'y, Piston	1		WY010001-	
6		0782 605 09	** Bushing	1		WY010001-	
7		0728 111 15	** Nipple, Grease	1		WY010001-	PT1/8
8		0765 033 28	* Seal, Dust	2		WY010001-	
9		0782 604 03	* Head, Cylinder	1		WY010001-	
10		0782 492 04	* Bushing	1		WY010001-	
11		0782 440 93	* Kit, Seal	1		WY010001-	
12	×	0752 935 04	** Ring, U	1		WY010001-	
13	×	0758 850 06	** Ring, Wiper	1		WY010001-	
14	×	0760 715 90	** Ring, O	1		WY010001-	G90-90B
15	×	0782 440 08	** Ring, Back-up	1		WY010001-	
16	×	0760 715 95	** Ring, O	1		WY010001-	G95-90B
17	×	0760 715 90	** Ring, O	1		WY010001-	G90-90B
18	×	0782 440 13	** Ring, Back-up	1		WY010001-	
19		0780 440 10	* Holder	1		WY010001-	
20		0782 604 04	* Spacer	1		WY010001-	
21		0782 440 11	* Seal, Cushion	1		WY010001-	
22		0782 604 05	* Collar	1		WY010001-	
23		0782 604 93	* Piston Ass'y	1		WY010001-	
24	×	**** *** **	** Piston	1		WY010001-	
25		0752 921 09	** Ring Ass'y, Seal	1		WY010001-	
26		0782 440 17	** Ring, Slide	2		WY010001-	
27		0561 100 10	** Screw, Set	1		WY010001-	M10X10
28		0609 016 10	** Ball, Steel	1		WY010001-	d=1/4
29		0782 604 07	* Bearing, Cushion	1		WY010001-	
30		0782 619 06	* Joint	1		WY010001-	
31		0782 605 08	* Pipe	1		WY010001-	
32		0782 491 09	* Plug	2		WY010001-	
33		0760 710 28	* Ring, O	4		WY010001-	P26-90B
34		0782 446 06	* Bolt	1		WY010001-	
35		0782 440 27	* Holder, Pipe	1		WY010001-	

https://truckmanualshub.com/

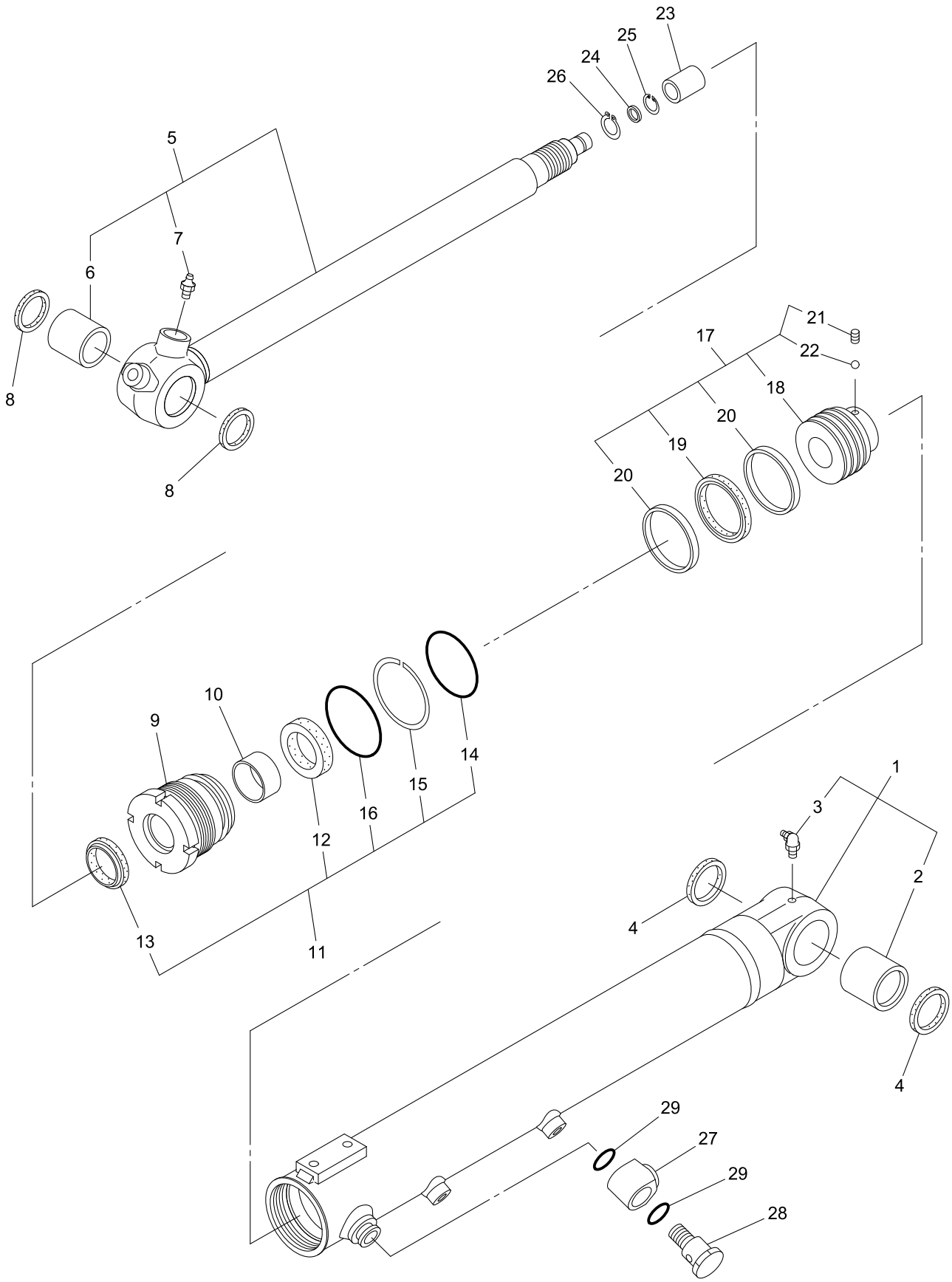

0782607UA-1
0782606UA-1

https://truckmanualshub.com/

KEY No.	SUP.	PART No.	DESCRIPTION	Q'TY	CHAN.	SERIAL No.	REMARKS
0		0782 606 UA	Cylinder Ass'y, Arm	1		WY010001-	
1	×	**** *** **	* Tube Ass'y, Cylinder	1		WY010001-	
2		0752 289 20	** Bushing	1		WY010001-	
3		0728 111 65	** Nipple, Grease	1		WY010001-	PT1/8X90
4		0751 796 24	* Seal, Dust	2		WY010001-	
5		0782 606 02	* Rod Ass'y, Piston	1		WY010001-	
6		0752 289 20	** Bushing	1		WY010001-	
7		0728 111 15	** Nipple, Grease	1		WY010001-	PT1/8
8		0751 796 24	* Seal, Dust	2		WY010001-	
9		0782 606 03	* Head, Cylinder	1		WY010001-	
10		0782 446 03	* Bushing	1		WY010001-	
11		0782 438 93	* Kit, Seal	1		WY010001-	
12	×	0752 756 05	** Ring, U	1		WY010001-	
13	×	0758 698 09	** Ring, Wiper	1		WY010001-	
14	×	0760 715 75	** Ring, O	1		WY010001-	G75-90B
15	×	0782 399 05	** Ring, Back-up	1		WY010001-	
16	×	0760 715 80	** Ring, O	1		WY010001-	G80-90B
17		0782 401 93	* Piston Ass'y	1		WY010001-	
18	×	**** *** **	** Piston	1		WY010001-	
19		0752 941 06	** Ring Ass'y, Seal	1		WY010001-	
20		0782 399 12	** Ring, Slide	2		WY010001-	
21		0561 080 08	** Screw, Set	1		WY010001-	M8X8
22		0751 901 25	** Ball, Steel	1		WY010001-	d=7/32
23		0782 438 15	* Bearing, Cushion	1		WY010001-	
24		0782 185 23	* Seal, Cushion	1		WY010001-	
25		0758 696 25	* Stopper	2		WY010001-	
26		0782 401 06	* Ring, Snap	1		WY010001-	
27		0782 619 06	* Joint	1		WY010001-	
28		0782 491 09	* Plug	1		WY010001-	
29		0760 710 28	* Ring, O	2		WY010001-	P26-90B

5

https://truckmanualshub.com/

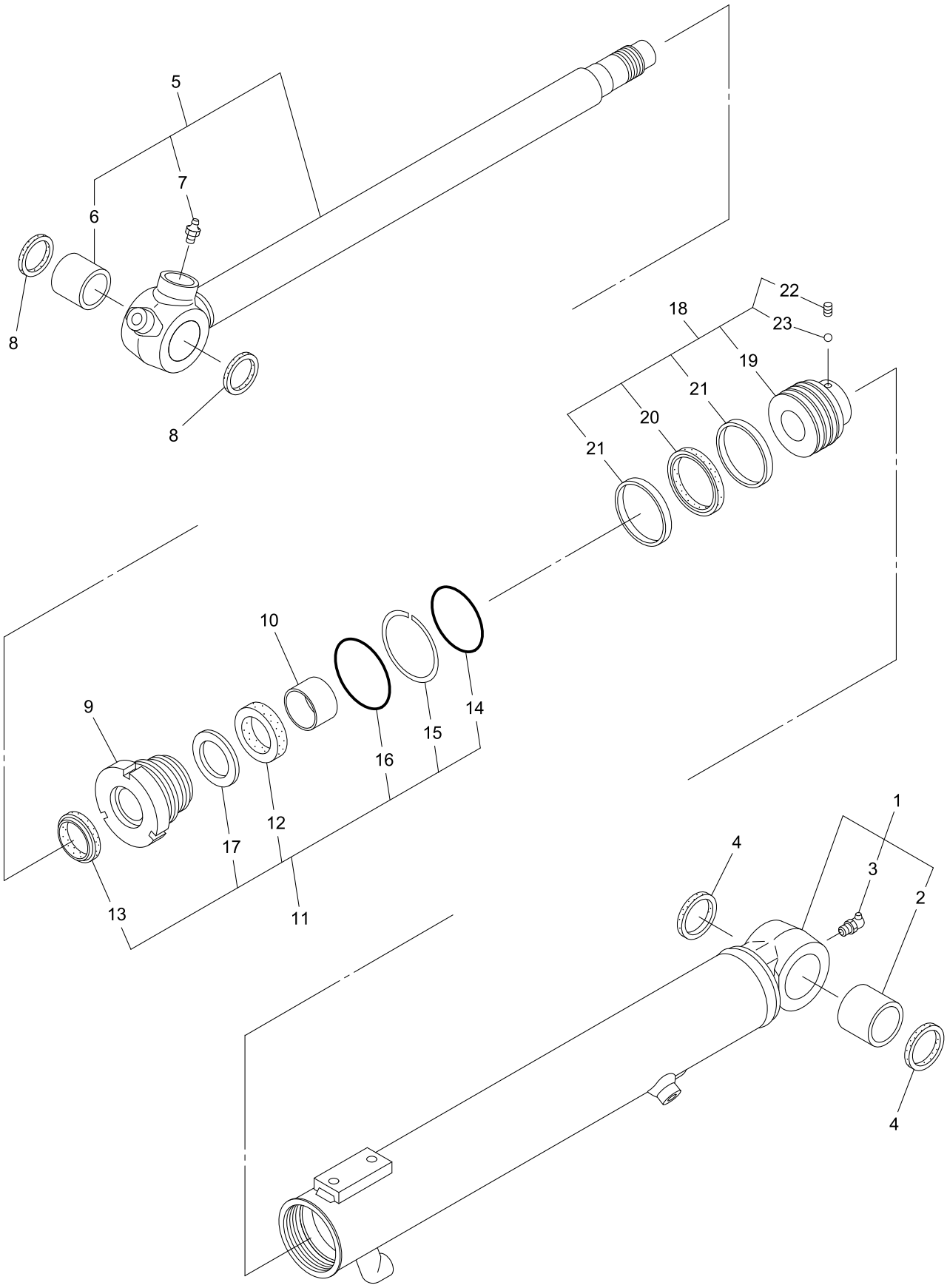

0782602UA-1

IHI

BUCKET CYLINDER ASS'Y

MODEL 55V4

SHEET No 5-10

https://truckmanualshub.com/

KEY No.	SUP.	PART No.	DESCRIPTION	Q'TY	CHAN.	SERIAL No.	REMARKS
0		0782 602 UA	Cylinder Ass'y, Bucket	1		WY010001-	
1	×	**** *** **	* Tube Ass'y, Cylinder	1		WY010001-	
2		0752 289 20	** Bushing	1		WY010001-	
3		0728 111 65	** Nipple, Grease	1		WY010001-	PT1/8X90
4		0751 796 24	* Seal, Dust	2		WY010001-	
5		0782 602 02	* Rod Ass'y, Piston	1		WY010001-	
6		0752 289 20	** Bushing	1		WY010001-	
7		0728 111 15	** Nipple, Grease	1		WY010001-	PT1/8
8		0751 796 24	* Seal, Dust	2		WY010001-	
9		0782 396 03	* Head, Cylinder	1		WY010001-	
10		0782 396 13	* Bushing	1		WY010001-	
11		0782 396 91	* Kit, Seal	1		WY010001-	
12	×	0782 396 04	** Ring, U	1		WY010001-	
13	×	0758 697 06	** Ring, Wiper	1		WY010001-	
14	×	0760 715 65	** Ring, O	1		WY010001-	G65-90B
15	×	0782 396 05	** Ring, Back-up	1		WY010001-	
16	×	0760 715 70	** Ring, O	1		WY010001-	G70-90B
17	×	0782 173 04	** Ring, Back-up	1		WY010001-	
18		0782 396 93	* Piston Ass'y	1		WY010001-	
19	×	**** *** **	** Piston	1		WY010001-	
20		0752 928 07	** Ring Ass'y, Seal	1		WY010001-	
21		0782 396 07	** Ring, Slide	2		WY010001-	
22		0561 080 08	** Screw, Set	1		WY010001-	M8X8
23		0751 901 25	** Ball, Steel	1		WY010001-	d=7/32

5

https://truckmanualshub.com/

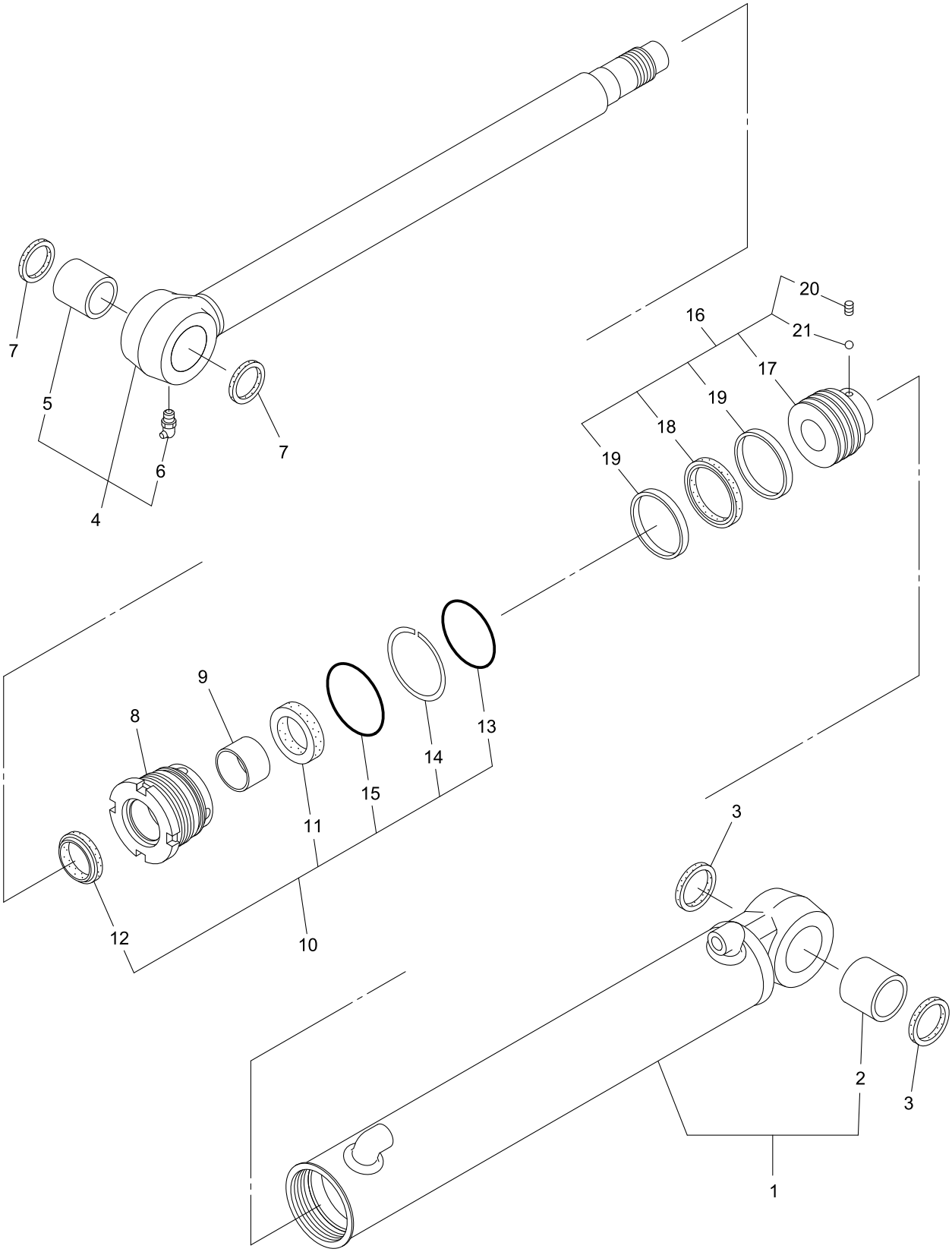

5

0782603UA-1

IHI

BOOM SWING CYLINDER ASS'Y

MODEL 55V4

SHEET No 5-11

https://truckmanualshub.com/

KEY No.	SUP.	PART No.	DESCRIPTION	Q'TY	CHAN.	SERIAL No.	REMARKS
0		0782 603 UA	Cylinder Ass'y, Boom Swing	1		WY010001-	
1	×	**** *** **	* Tube Ass'y, Cylinder	1		WY010001-	
2		0752 159 21	** Bushing	1		WY010001-	
3		0765 033 28	* Seal, Dust	2		WY010001-	
4		0782 603 02	* Rod Ass'y, Piston	1		WY010001-	
5		0752 159 21	** Bushing	1		WY010001-	
6		0728 111 65	** Nipple, Grease	1		WY010001-	PT1/8X90
7		0765 033 28	* Seal, Dust	2		WY010001-	
8		0782 380 03	* Head, Cylinder	1		WY010001-	
9		0782 446 03	* Bushing	1		WY010001-	
10		0782 380 91	* Kit, Seal	1		WY010001-	
11	×	0752 756 05	** Ring, U	1		WY010001-	
12	×	0758 698 09	** Ring, Wiper	1		WY010001-	
13	×	0760 715 85	** Ring, O	1		WY010001-	G85-90B
14	×	0782 380 05	** Ring, Back-up	1		WY010001-	
15	×	0760 715 90	** Ring, O	1		WY010001-	G90-90B
16		0782 380 93	* Piston Ass'y	1		WY010001-	
17	×	**** *** **	** Piston	1		WY010001-	
18		0752 164 20	** Ring Ass'y, Seal	1		WY010001-	
19		0782 380 07	** Ring, Slide	2		WY010001-	
20		0561 080 08	** Screw, Set	1		WY010001-	M8X8
21		0751 901 25	** Ball, Steel	1		WY010001-	d=7/32

5

https://truckmanualshub.com/

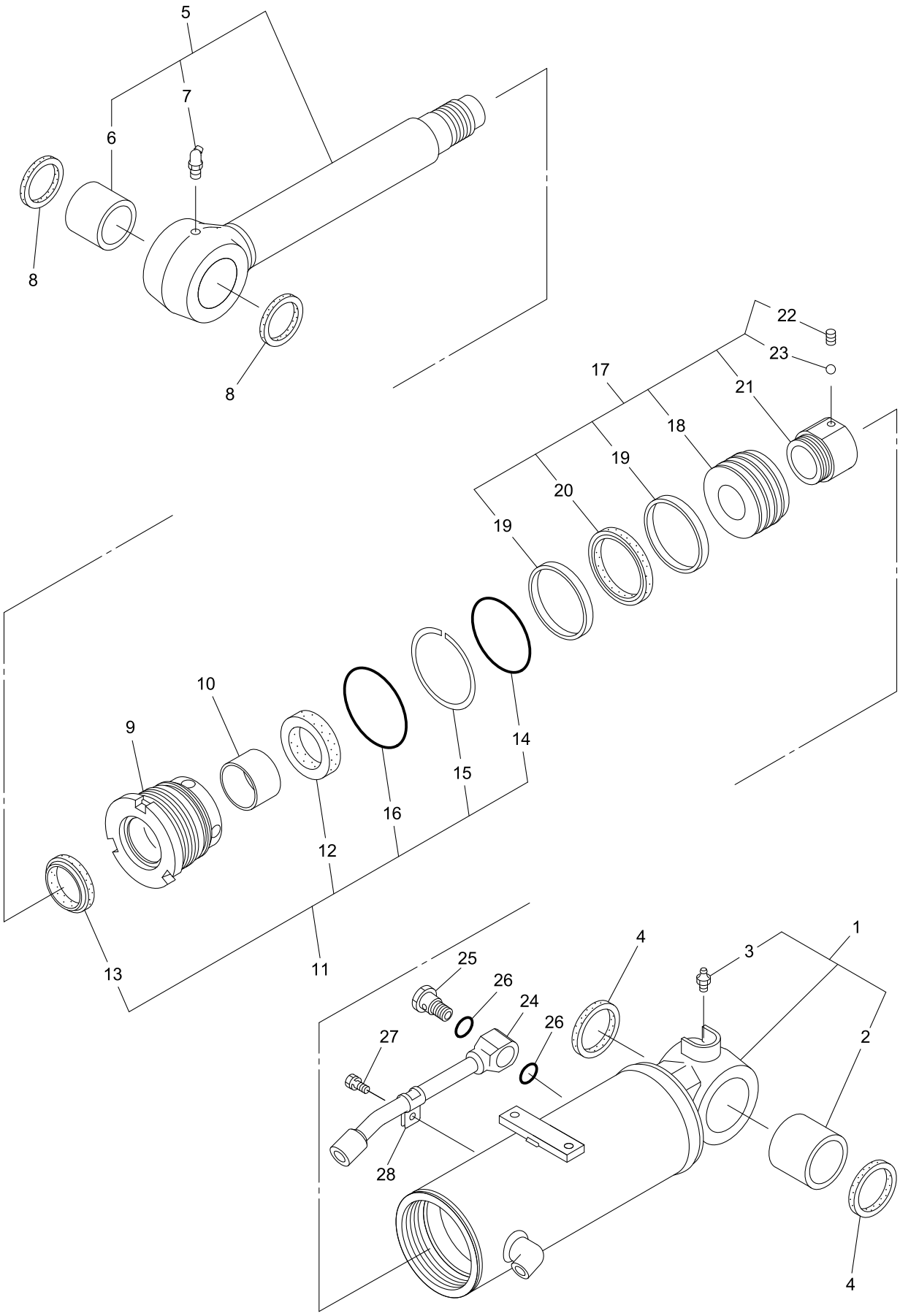

0782608UA-1

https://truckmanualshub.com/

KEY No.	SUP.	PART No.	DESCRIPTION	Q'TY	CHAN.	SERIAL No.	REMARKS
0		0782 608 UA	Cylinder Ass'y, Blade	1		WY010001-	
1	×	**** *** **	* Tube Ass'y, Cylinder	1		WY010001-	
2		0782 608 08	** Bushing	1		WY010001-	
3		0728 111 15	** Nipple, Grease	1		WY010001-	PT1/8
4		0758 850 12	* Seal, Dust	2		WY010001-	
5		0782 608 02	* Rod Ass'y, Piston	1		WY010001-	
6		0782 608 08	** Bushing	1		WY010001-	
7		0728 111 55	** Nipple, Grease	1		WY010001-	PT1/8X67.5
8		0758 850 12	* Seal, Dust	2		WY010001-	
9		0782 608 03	* Head, Cylinder	1		WY010001-	
10		0782 492 04	* Bushing	1		WY010001-	
11		0782 608 91	* Kit, Seal	1		WY010001-	
12	×	0752 935 04	** Ring, U	1		WY010001-	
13	×	0758 850 06	** Ring, Wiper	1		WY010001-	
14	×	0760 716 00	** Ring, O	1		WY010001-	G100-90B
15	×	0782 608 04	** Ring, Back-up	1		WY010001-	
16	×	0760 716 05	** Ring, O	1		WY010001-	G105-90B
17		0782 608 93	* Piston Ass'y	1		WY010001-	
18	×	**** *** **	** Piston	1		WY010001-	
19		0782 608 06	** Ring, Slide	2		WY010001-	
20		0752 922 11	** Ring Ass'y, Seal	1		WY010001-	
21		0782 498 13	** Nut	1		WY010001-	
22		0561 100 10	** Screw, Set	1		WY010001-	M10X10
23		0609 016 10	** Ball, Steel	1		WY010001-	d=1/4
24		0782 608 07	* Pipe	1		WY010001-	
25		0782 446 05	* Plug	1		WY010001-	
26		0760 710 23	* Ring, O	2		WY010001-	P22A-90B
27		0782 446 06	* Bolt	1		WY010001-	
28		0782 431 21	* Holder, Pipe	1		WY010001-	

5

https://truckmanualshub.com/

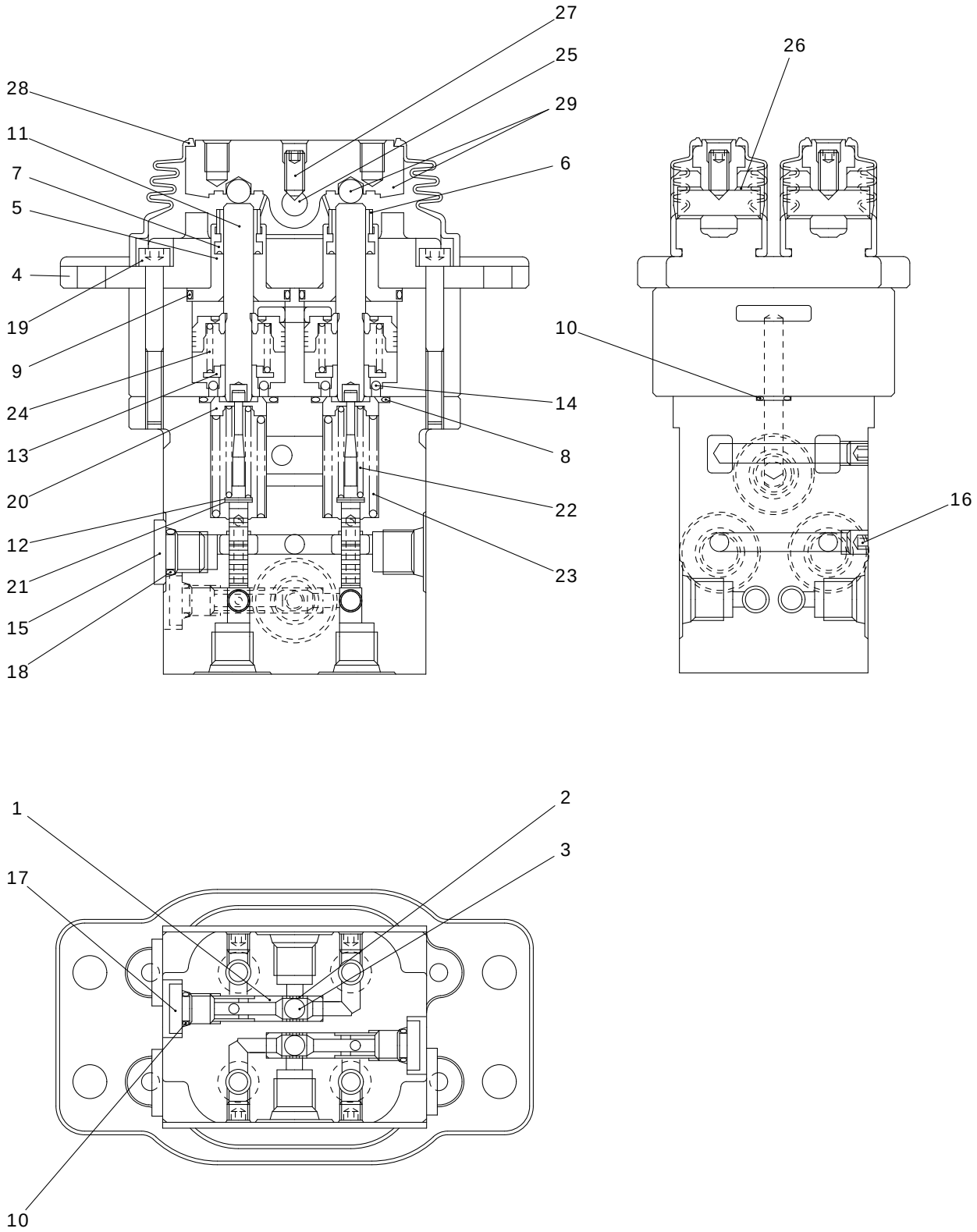

0783995UA-1
0783936UA-1

https://truckmanualshub.com/

KEY No.	SUP.	PART No.	DESCRIPTION	Q'TY	CHAN.	SERIAL No.	REMARKS
0		0783 995 UA	Valve Ass'y, Pilot	1		WY010001-	
1		0783 951 01	* Seat	2		WY010001-	
2		0783 951 02	* Bushing	2		WY010001-	
3		0609 016 10	* Ball, Steel	2		WY010001-	d=1/4
4		0783 951 03	* Cover	2		WY010001-	
5		0783 951 04	* Plug	4		WY010001-	
6		0783 951 05	* Cap, Grease	4		WY010001-	
7		0783 951 06	* Packing	4		WY010001-	
8		0760 310 20	* Ring, O	4		WY010001-	020-90B
9		0760 310 25	* Ring, O	4		WY010001-	025-90B
10		0760 710 08	* Ring, O	4		WY010001-	P8-90B
11		0783 936 01	* Rod, Push	4		WY010001-	
12		0783 951 08	* Shim	4		WY010001-	
13		0783 951 09	* Seat, Spring	4		WY010001-	
14		0751 948 06	* Ball, Steel	12		WY010001-	
15		0756 357 03	* Plug	3		WY010001-	
16		0750 198 15	* Plug	6		WY010001-	
17		0783 920 06	* Plug	2		WY010001-	
18		0760 710 12	* Ring, O	3		WY010001-	P11-90B
19		0562 060 50	* Bolt, Socket Head	4		WY010001-	M6X50
20		0783 951 10	* Seat, Spring	4		WY010001-	
21		0783 951 11	* Washer	4		WY010001-	
22		0783 995 01	* Spring	4		WY010001-	
23		0783 951 13	* Spring	4		WY010001-	
24		0783 951 14	* Spring	4		WY010001-	
25		0783 951 15	* Shaft Cam	2		WY010001-	
26		0783 951 16	* Bushing	4		WY010001-	
27		0783 951 17	* Screw, Set	2		WY010001-	
28		0783 951 18	* Boot	2		WY010001-	
29		0783 951 91	* Cam Ass'y	2		WY010001-	

https://truckmanualshub.com/

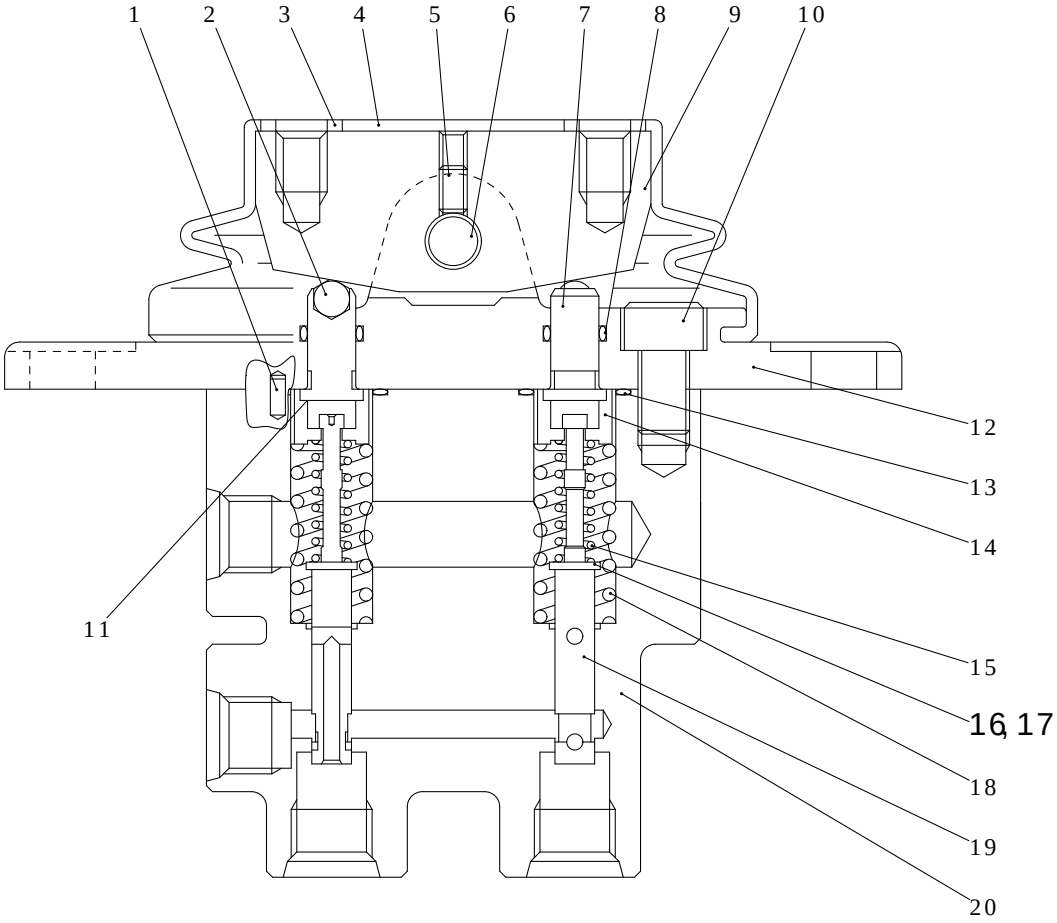

5

0783965UA-1
0783724UA-1

IHI

PILOT VALVE ASS'Y

MODEL 55V4

SHEET No 5-14

https://truckmanualshub.com/

KEY No.	SUP.	PART No.	DESCRIPTION	Q'TY	CHAN.	SERIAL No.	REMARKS
0		0783 965 UA	Valve Ass'y, Pilot	1		WY010001-	
1		0756 326 22	* Pin, Spring	2		WY010001-	d=3X6
2		0756 326 23	* Ball, Steel	2		WY010001-	d=6
3		0756 326 20	* Washer, Flat	2		WY010001-	M8
4		0756 326 10	* Boot	1		WY010001-	
5		0567 040 08	* Screw, Set	1		WY010001-	M4X8
6		0756 326 08	* Pin	1		WY010001-	
7		0756 326 04	* Pusher	2		WY010001-	
8		0760 610 08	* Ring, O	2		WY010001-	P8-70B
9		0756 326 07	* Cam	1		WY010001-	
10		0562 080 16	* Bolt, Socket Head	2		WY010001-	M8X16
11		0783 965 02	* Shim	AR		WY010001-	t=0.1
11-1		0783 965 03	* Shim	AR		WY010001-	t=0.2
12		**** *** **	* Cover	1		WY010001-	
13		0756 326 25	* Ring, O	2		WY010001-	S16-90B
14		0756 065 13	* Holder, Spring	2		WY010001-	
15		0783 965 11	* Spring	2		WY010001-	
16		0756 326 19	* Washer, Flat	2		WY010001-	M4
17		0756 326 06	* Shim	AR		WY010001-	t=0.1
17-1		0756 065 11	* Shim	AR		WY010001-	
18		0756 326 09	* Spring	2		WY010001-	
19		0783 965 04	* Spool	2		WY010001-	
20		**** *** **	* Body	1		WY010001-	

https://truckmanualshub.com/

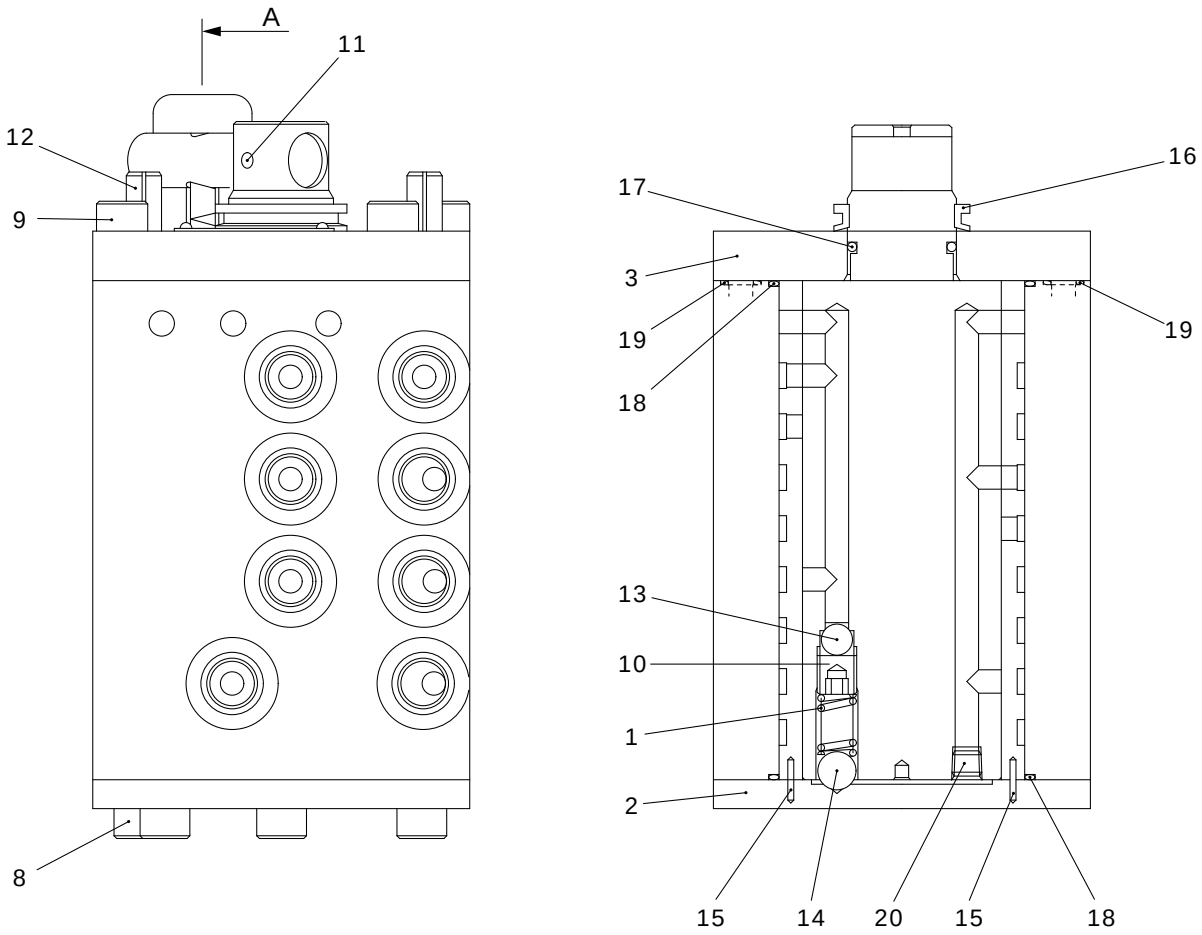

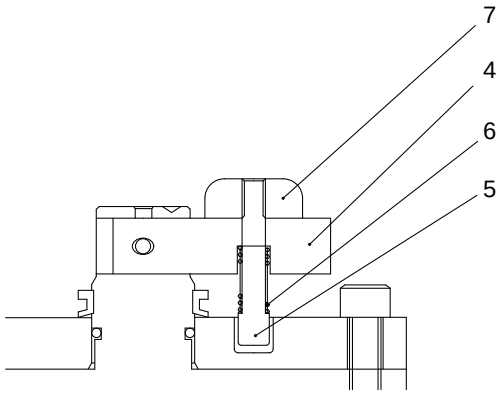

"A" SECTION

0784112UA-1

https://truckmanualshub.com/

KEY No.	SUP.	PART No.	DESCRIPTION	Q'TY	CHAN.	SERIAL No.	REMARKS
0		0784 112 UA	Valve Ass'y, Multiple (A-D Change)	1		WY010001-	
1		0784 112 04	* Spring	1		WY010001-	
2		0784 112 06	* Cover	1		WY010001-	
3		0784 112 07	* Cover	1		WY010001-	
4		0784 112 08	* Lever	1		WY010001-	
5		0784 112 09	* Pin	1		WY010001-	
6		0784 112 10	* Spring	1		WY010001-	
7		0784 112 11	* Grip	1		WY010001-	
8		0562 080 16	* Bolt, Socket Head	6		WY010001-	M8X16
9		0562 080 25	* Bolt, Socket Head	6		WY010001-	M8X25
10		0561 100 10	* Screw, Set	1		WY010001-	M10X10
11		0494 606 25	* Pin, Spring	1		WY010001-	d=4X25
12		0494 610 24	* Pin, Spring	2		WY010001-	d=8X24
13		0756 781 14	* Ball, Steel	1		WY010001-	d=8
14		0784 112 20	* Ball, Steel	1		WY010001-	d=10
15		0783 637 16	* Roller, Needle	4		WY010001-	d=2X9.8
16		0756 863 09	* Seal, Oil	1		WY010001-	
17		0760 211 18	* Ring, O	1		WY010001-	118-70B
18		0783 637 19	* Ring, O	2		WY010001-	S65-70B
19		0783 637 20	* Ring, O	8		WY010001-	S8-70B
20		0754 124 13	* Plug	7		WY010001-	

5

https://truckmanualshub.com/

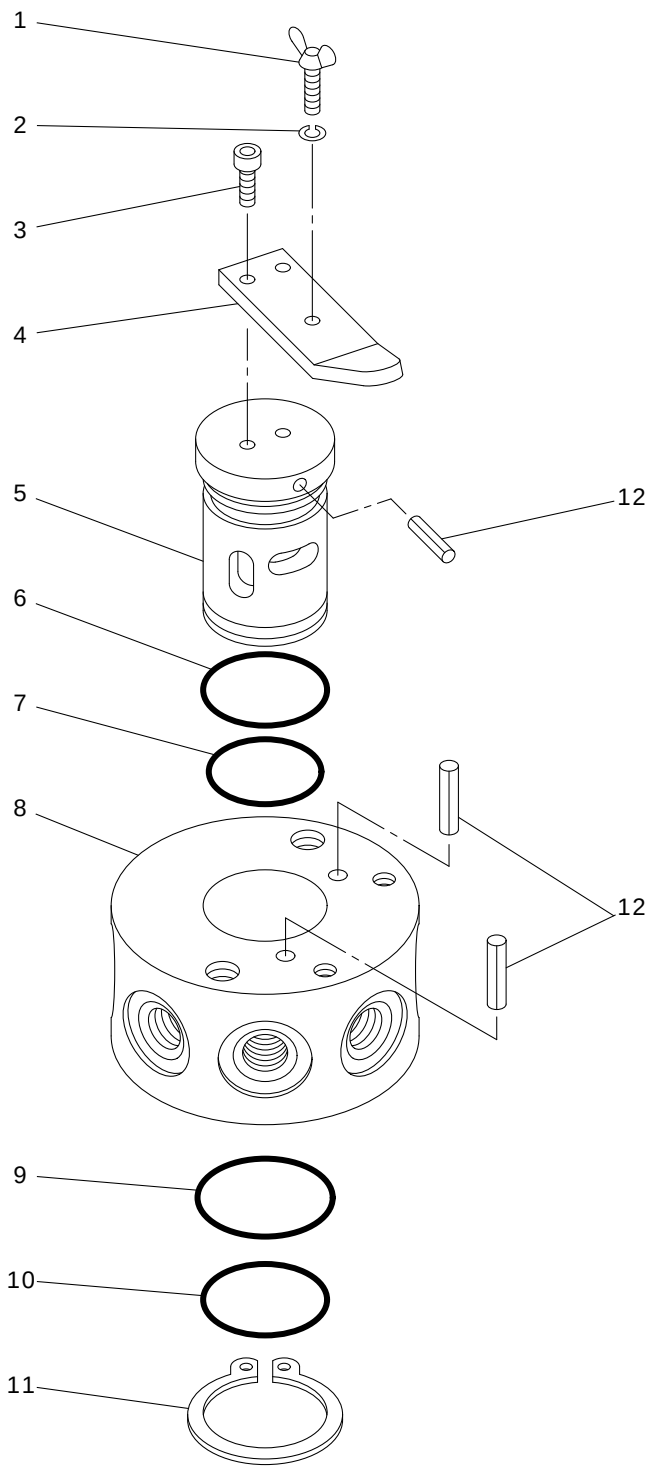

0756094UA-1

IHI

MULTIPLE VALVE ASS'Y (FOR A, F CHANGE)

MODEL 55V4

SHEET No 5-15[B]

https://truckmanualshub.com/

KEY No.	SUP.	PART No.	DESCRIPTION	Q'TY	CHAN.	SERIAL No.	REMARKS
0		0756 094 UA	Valve Ass'y, Selector	1		WY010001-	
1		0756 094 04	* Bolt, Wing	1		WY010001-	
2		0590 050 00	* Washer, Lock	1		WY010001-	M5
3		0562 050 14	* Bolt, Socket Head	2		WY010001-	M5X14
4		0756 094 03	* Lever	1		WY010001-	
5		0756 094 02	* Rotor	1		WY010001-	
6		0756 094 08	* Ring, O	1		WY010001-	
7		0756 094 07	* Ring, O	1		WY010001-	
8		0756 094 01	* Body	1		WY010001-	
9		0756 094 06	* Ring, O	1		WY010001-	
10		0756 094 05	* Ring, O	1		WY010001-	
11		0493 510 30	* Ring, Snap	1		WY010001-	d=30
12		0494 606 12	* Pin, Spring	3		WY010001-	d=4X12

https://truckmanualshub.com/

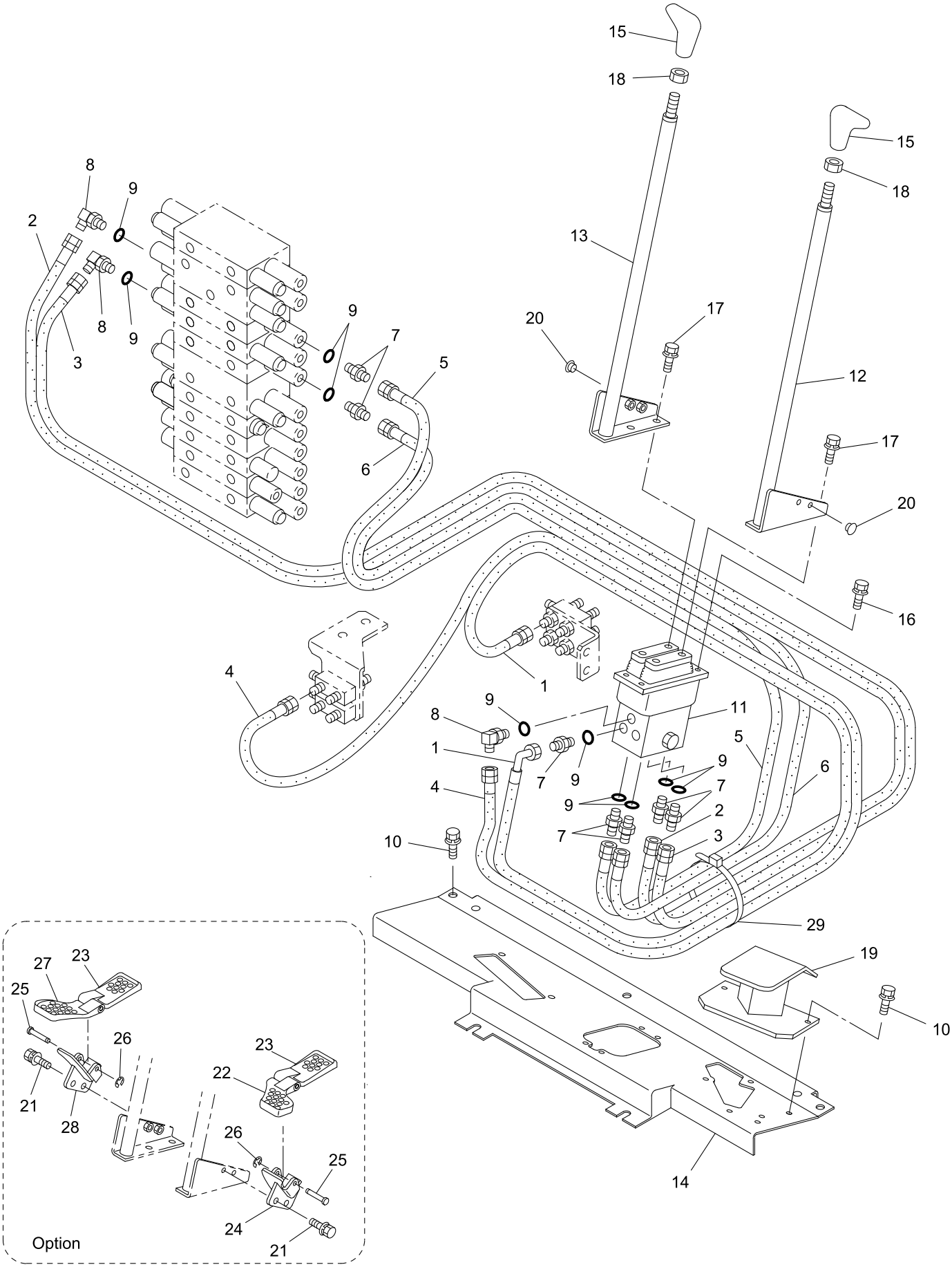

40V4-060100-1

https://truckmanualshub.com/

KEY No.	SUP.	PART No.	DESCRIPTION	Q'TY	CHAN.	SERIAL No.	REMARKS
0	×	F342 640 00	Lever Ass'y, Travel	1		WY010001-	
0-1	×	F361 722 00	Lever Ass'y, Travel	1		WY010001-	
1		4070 551 22	* Hose Ass'y	1		WY010001-	L=1000
2		4070 548 89	* Hose Ass'y	1		WY010001-	L=2250
2-1	☆	D406 499 01	* Decal (T1)	2		WY010001-	D406 499 00
3		4070 548 21	* Hose Ass'y	1		WY010001-	L=2100
3-1	☆	D406 499 03	* Decal (T3)	2		WY010001-	D406 499 00
4		4070 548 06	* Hose Ass'y	1		WY010001-	L=1200
5		4070 548 04	* Hose Ass'y	1		WY010001-	L=1800
5-1	☆	D406 499 02	* Decal (T2)	2		WY010001-	D406 499 00
6		4070 548 04	* Hose Ass'y	1		WY010001-	L=1800
6-1	☆	D406 499 04	* Decal (T4)	2		WY010001-	D406 499 00
7		0713 700 70	* Connector	7		WY010001-	
8		0710 122 09	* Elbow	3		WY010001-	
9		0760 710 12	* Ring, O	10		WY010001-	P11-90B
10		0518 100 25	* Bolt, Treatment (W/L.W, F.W)	7		WY010001-	M10X25 P=1.25
11	#	0783 995 UA	* Valve Ass'y, Pilot	1		WY010001-	Sh. No. 5-13
12		D495 838 00	* Lever (L.H.)	1		WY010001-	
13		D495 839 00	* Lever (R.H.)	1		WY010001-	
14		D419 360 00	* Bracket	1		WY010001-	
15		0690 283 72	* Grip	2		WY010001-	
16		0517 080 25	* Bolt, Treatment (W/L.W, F.W)	4		WY010001-	M8X25
17		0517 080 16	* Bolt, Treatment (W/L.W, F.W)	4		WY010001-	M8X16
18		0549 140 00	* Nut, Half	2		WY010001-	M14 P=1.5
19		D419 551 00	* Bracket	1		WY010001-	
20		0690 201 05	* Plug, Hole	4		WY010001-	
21		0517 080 25	* Bolt, Treatment (W/L.W, F.W)	4		WY010001-	M8X25
22		D501 057 00	* Pedal	1		WY010001-	Option
23		D501 076 00	* Pedal	2		WY010001-	Option
24		D419 342 00	* Bracket	1		WY010001-	Option
25		D013 384 00	* Pin,Head	2		WY010001-	Option
26		0493 510 08	* Ring, Snap	2		WY010001-	Option
27		D501 058 00	* Pedal	1		WY010001-	Option
28		D419 343 00	* Bracket	1		WY010001-	Option
29		0820 067 05	* Band, Cable	1		WY010001-	

https://truckmanualshub.com/

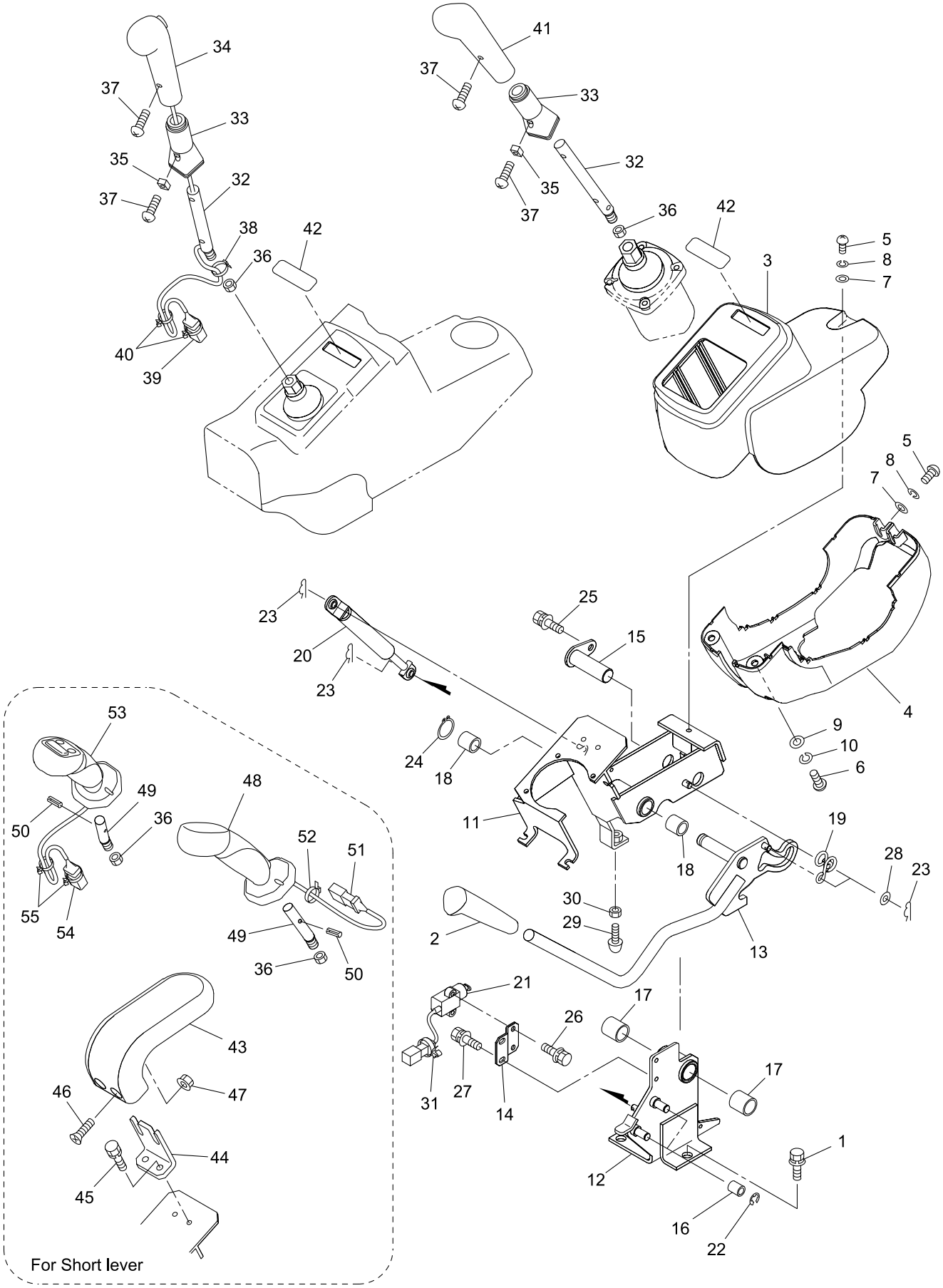

V4ALL-060200-1

https://truckmanualshub.com/

KEY No.	SUP.	PART No.	DESCRIPTION	Q'TY	CHAN.	SERIAL No.	REMARKS
0	×	F361 722 00	Lever Ass'y, Control	1		WY010001-	
1		0518 100 25	* Bolt, Treatment (W/L.W, F.W)	3		WY010001-	M10X25 P=1.25
2		0690 283 86	* Grip	1		WY010001-	
3		D465 318 00	* Panel	1		WY010001-	
4		D465 319 00	* Panel	1		WY010001-	
5		4004 364 01	* Bolt, Button Head	3		WY010001-	M6X18
6		0565 060 25	* Screw, Pan Head	2		WY010001-	M6X25
7		0594 060 00	* Washer, Flat	3		WY010001-	M6
8		0596 060 00	* Washer, Lock	3		WY010001-	M6
9		0593 060 00	* Washer, Flat	2		WY010001-	M6
10		0590 060 00	* Washer, Lock	2		WY010001-	M6
11		D419 308 00	* Bracket	1		WY010001-	
12		D418 302 00	* Bracket	1		WY010001-	
13		D495 774 00	* Lever	1		WY010001-	
14		D418 190 00	* Bracket	1		WY010001-	
15		D017 225 00	* Pin	1		WY010001-	
16		4040 867 00	* Spacer	2		WY010001-	
17		0618 120 20	* Bushing	2		WY010001-	
18		0618 116 15	* Bushing	2		WY010001-	
19		D170 052 00	* Spring	1		WY010001-	
20		0652 253 UA	* Stay, Dumper	1		WY010001-	
21		0858 314 15	* Switch, Limit	1		WY010001-	
22		0493 560 09	* Ring ""E""	2		WY010001-	
23		4016 030 04	* Pin, Snap	4		WY010001-	
24		0493 510 16	* Ring, Snap	1		WY010001-	d=16
25		0517 080 20	* Bolt, Treatment (W/L.W, F.W)	1		WY010001-	M8X20
26		0517 060 16	* Bolt, Treatment (W/L.W, F.W)	2		WY010001-	M6X16
27		0517 060 12	* Bolt, Treatment (W/L.W, F.W)	2		WY010001-	M6X12
28		0593 080 00	* Washer, Flat	2		WY010001-	M8
29		0690 202 50	* Pad, Rubber	1		WY010001-	
30		0548 120 00	* Nut, Half	1		WY010001-	M12
31		0690 082 08	* Band, Cable	1		WY010001-	
32		D495 577 00	* Lever	2		WY010001-	
33		D042 040 00	* Collar	2		WY010001-	
34		0690 283 40	* Grip (W/Switch)	1		WY010001-	
35		D040 178 00	* Spacer	2		WY010001-	
36		0580 140 00	* Nut, Hex.	2		WY010001-	M14
37		0565 040 12	* Screw, Pan Head	4		WY010001-	M4X12
38		0820 067 07	* Band, Cable	1		WY010001-	
39		D592 290 00	* Harness	1		WY010001-	
40		0690 082 08	* Clamp, Hose	2		WY010001-	
41		0690 283 41	* Grip	1		WY010001-	
42		D408 281 00	* Seal	2		WY010001-	
43		D480 009 00	* Rest, Arm	2		WY010001-	
44		D418 139 00	* Bracket	2		WY010001-	
45		0519 080 20	* Bolt, Treatment (W/L.W)	4		WY010001-	M8X20
46		D004 049 02	* Bolt, Button Head	4		WY010001-	M8X30
47		0521 080 00	* Nut, Hex..(W/F.W)	4		WY010001-	M8
48		0690 283 85	* Grip	1		WY010001-	
49		D495 843 00	* Lever	2		WY010001-	
50		0494 608 40	* Pin, Spring	2		WY010001-	d=5X40
51		0820 514 UA	* Connector	1		WY010001-	

https://truckmanualshub.com/

KEY No.	SUP.	PART No.	DESCRIPTION	Q'TY	CHAN.	SERIAL No.	REMARKS
52		0820 067 03	* Band, Cable	1		WY010001-	
53		0690 283 82	* Grip (W/Switch)	1		WY010001-	
54		0820 513 UA	* Connector	1		WY010001-	
55		0690 082 08	* Clamp, Hose	2		WY010001-	

https://truckmanualshub.com/

[Memo]

https://truckmanualshub.com/

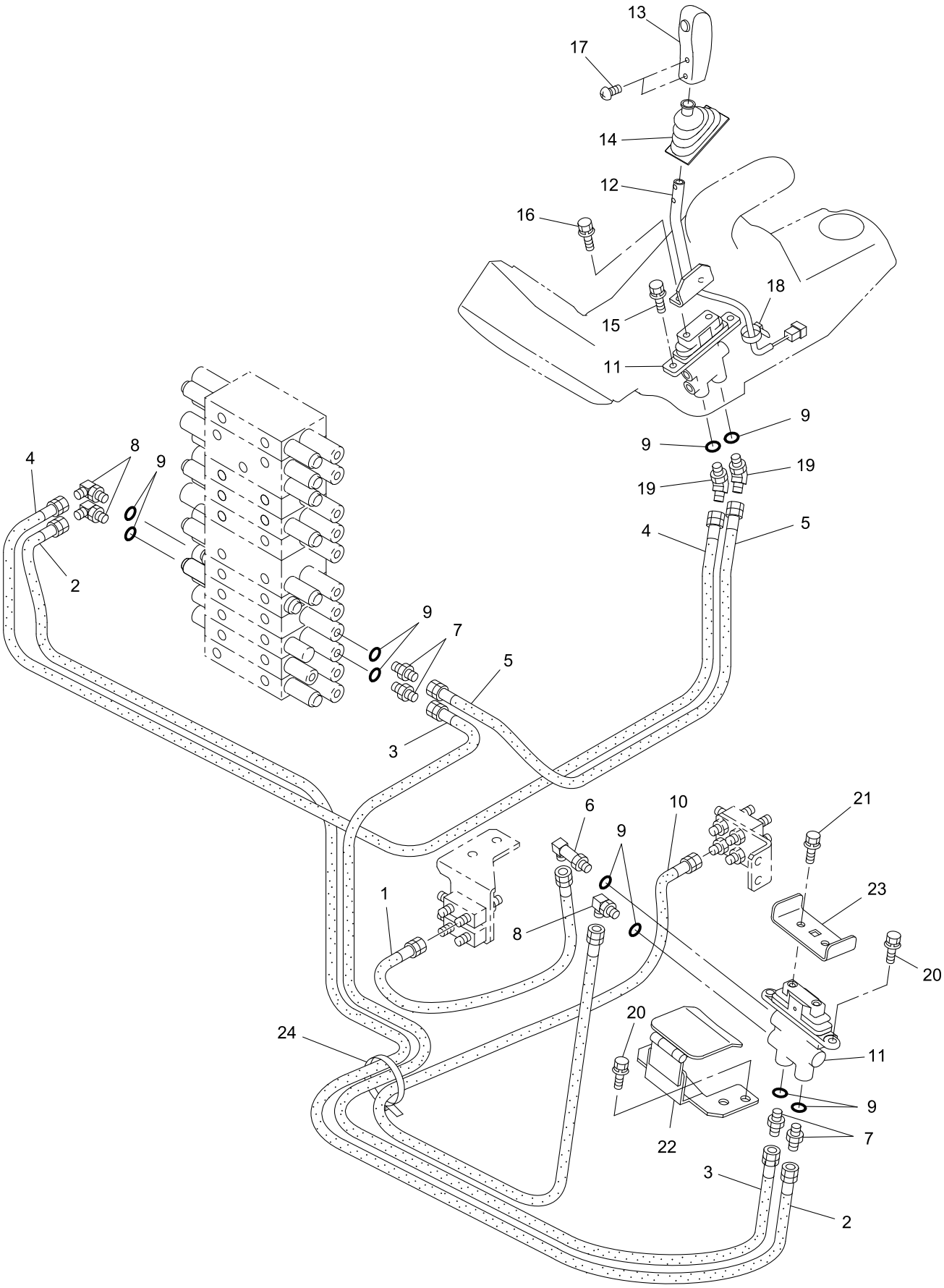

40V4-060300-1

https://truckmanualshub.com/

KEY No.	SUP.	PART No.	DESCRIPTION	Q'TY	CHAN.	SERIAL No.	REMARKS
0	×	F342 640 00	Control Ass'y, Blade & Boom Swing	1		WY010001-	
1		4070 548 57	* Hose Ass'y	1		WY010001-	L=450
2		4070 548 39	* Hose Ass'y	1		WY010001-	L=2000
3		4070 548 19	* Hose Ass'y	1		WY010001-	L=1250
4		4070 548 01	* Hose Ass'y	1		WY010001-	L=1900
4-1	☆	D407 818 01	* Decal (BA)	2		WY010001-	D407 818 00
5		4070 548 06	* Hose Ass'y	1		WY010001-	L=1200
5-1	☆	D407 818 02	* Decal (BB)	2		WY010001-	D407 818 00
6		0710 117 02	* Elbow, Long	1		WY010001-	
7		0713 700 70	* Connector	4		WY010001-	
8		0710 122 09	* Elbow	3		WY010001-	
9		0760 710 12	* Ring, O	10		WY010001-	P11-90B
10		4070 548 36	* Hose Ass'y	1		WY010001-	L=550
11	#	0783 965 UA	* Valve Ass'y, Pilot	2		WY010001-	Sh. No. 5-14
12		D495 808 00	* Lever	1		WY010001-	
13		0690 283 81	* Grip (W/Switch)	1		WY010001-	
14		D181 002 00	* Boots	1		WY010001-	
15		0517 080 20	* Bolt, Treatment (W/L.W, F.W)	2		WY010001-	M8X20
16		0517 080 16	* Bolt, Treatment (W/L.W, F.W)	2		WY010001-	M8X16
17		0565 040 08	* Screw, Pan Head	2		WY010001-	M4X8
18		0820 067 03	* Band, Cable	1		WY010001-	
19		0710 121 00	* Elbow, 45	2		WY010001-	
20		0518 100 25	* Bolt, Treatment (W/L.W, F.W)	4		WY010001-	M10X25 P=1.25
21		0517 080 16	* Bolt, Treatment (W/L.W, F.W)	2		WY010001-	M8X16
22		D419 286 00	* Bracket	1		WY010001-	
23		D501 075 00	* Pedal	1		WY010001-	
24		0820 067 05	* Band, Cable	1		WY010001-	

6

https://truckmanualshub.com/

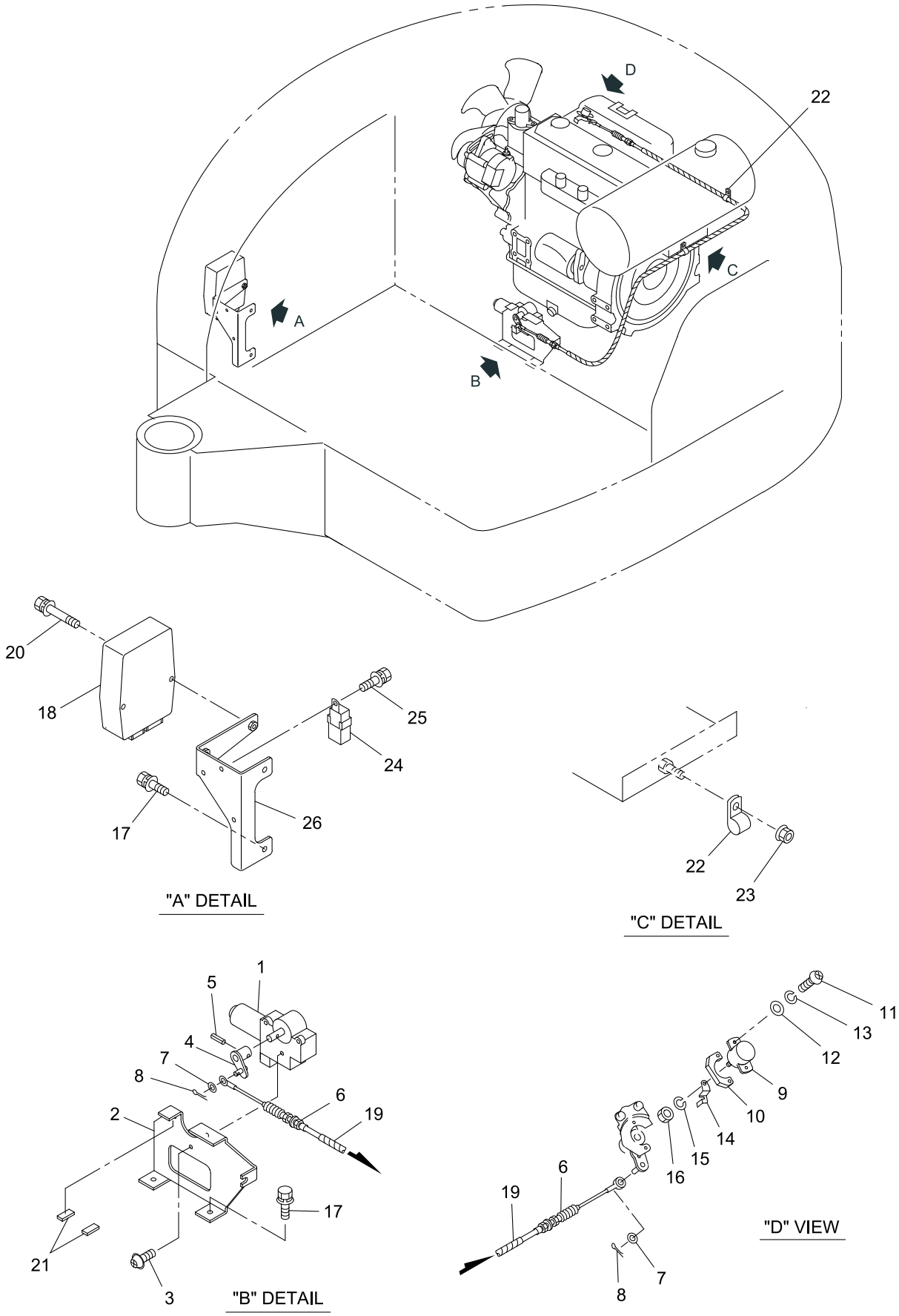

40V4-060400-1

https://truckmanualshub.com/

KEY No.	SUP.	PART No.	DESCRIPTION	Q'TY	CHAN.	SERIAL No.	REMARKS
0	×	F361 697 00	Control Ass'y, Engine	1		WY010001-	
1		0891 802 UA	* Motor	1		WY010001-	
2		D419 273 00	* Bracket	1		WY010001-	
3		0528 050 16	* Screw, Tapping	3		WY010001-	M5X16
4		D495 830 00	* Lever	1		WY010001-	
5		0494 606 16	* Pin, Spring	1		WY010001-	d=4X16
6		0690 511 47	* Cable, Control	1		WY010001-	
7		0593 060 00	* Washer, Flat	2		WY010001-	M6
8		0599 010 15	* Pin, Cotter	2		WY010001-	d=1.6X15
9		0858 614 12	* Meter, Potention	1		WY010001-	
10		D040 346 00	* Spacer	1		WY010001-	
11		0565 040 20	* Screw, Pan Head	2		WY010001-	M4X20
12		0593 040 00	* Washer, Flat	2		WY010001-	M4
13		0590 040 00	* Washer, Lock	2		WY010001-	M4
14		D495 810 00	* Lever	1		WY010001-	
15		0590 060 00	* Washer, Lock	1		WY010001-	M6
16		0580 060 00	* Nut, Hex.	1		WY010001-	M6
17		0517 080 20	* Bolt, Treatment (W/L.W, F.W)	4		WY010001-	M8X20
18		0891 922 UA	* Controller, Throttle	1		WY010001-	
19		0820 803 01	* Tube, Corrugate	M		WY010001-	L=1550
20		0517 060 60	* Bolt, Treatment (W/L.W, F.W)	2		WY010001-	M6X60
21		D433 503 00	* Plate, Rubber	2		WY010001-	
22		4080 000 03	* Clamp, Hose	2		WY010001-	
23		0524 100 00	* Nut, Hex. (W/F.W)	1		WY010001-	M10 P=1.25
24		0820 215 07	* Relay	1		WY010001-	
25		0517 060 12	* Bolt, Treatment (W/L.W, F.W)	1		WY010001-	M6X12
26		D419 347 00	* Bracket	1		WY010001-	

6

https://truckmanualshub.com/

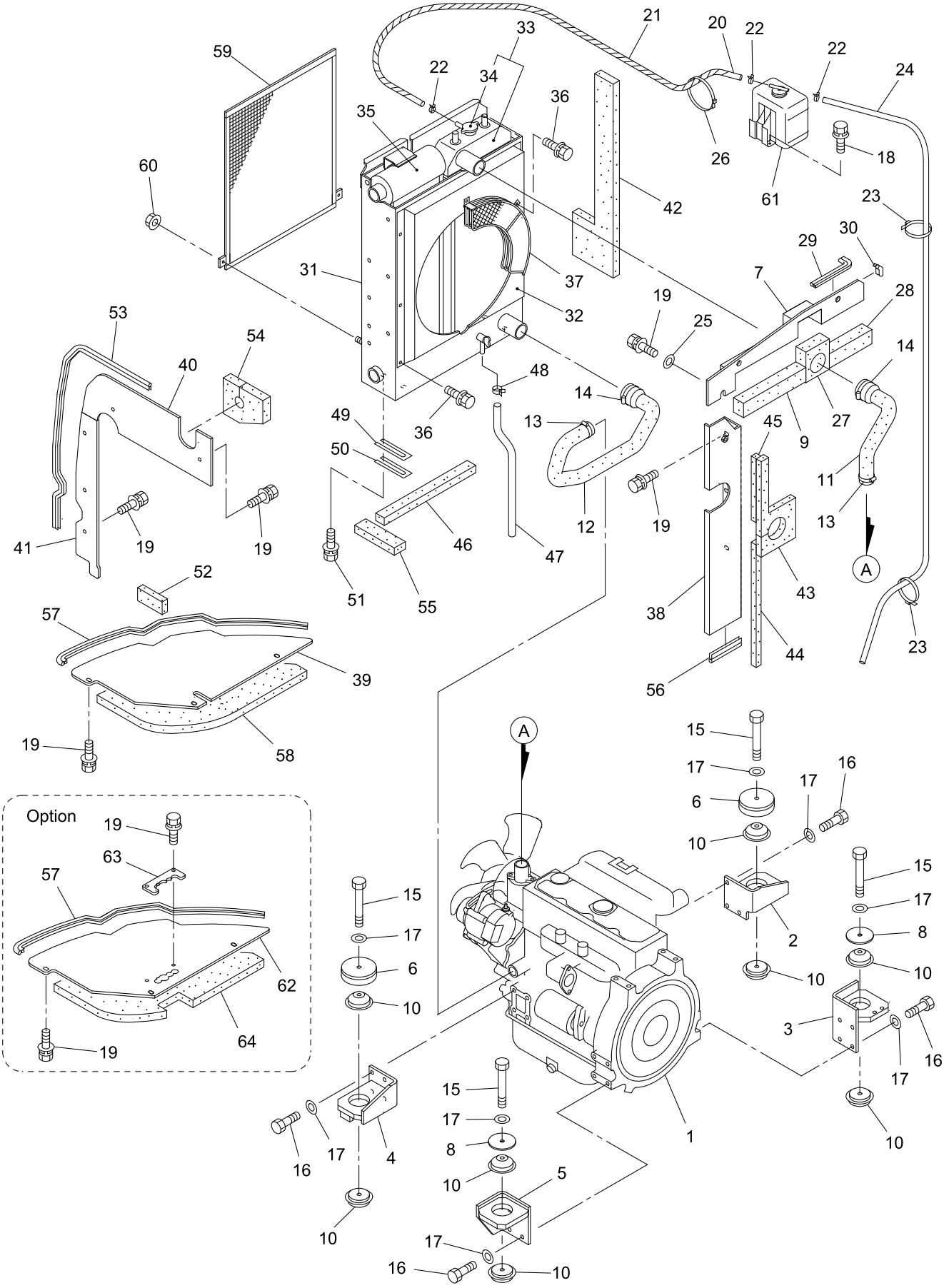

40V4-070100-1

https://truckmanualshub.com/

KEY No.	SUP.	PART No.	DESCRIPTION	Q'TY	CHAN.	SERIAL No.	REMARKS
0	×	F330 676 00	Engine & Accessories	1		WY010001-	
0-1	×	F330 678 00	Engine & Accessories	1		WY010001-	
1		0676 253 UA	* Engine Ass'y	1		WY010001-	V2403-M-DI-E3B-BHIH1
2		D419 258 00	* Bracket	1		WY010001-	
3		D419 256 00	* Bracket	1		WY010001-	
4		D419 259 00	* Bracket	1		WY010001-	
5		D419 257 00	* Bracket	1		WY010001-	
6		D481 022 00	* Holder	2		WY010001-	
7		D458 445 00	* Cover	1		WY010001-	
8		D006 144 00	* Washer	2		WY010001-	
9		D493 657 00	* Panel, Sponge	1		WY010001-	
10		0910 931 10	* Rubber, Cushion	8		WY010001-	
11		0775 551 93	* Hose, Radiator	1		WY010001-	
12		0775 551 95	* Hose, Radiator	1		WY010001-	
13		0690 083 09	* Clamp, Hose	2		WY010001-	
14		0690 083 12	* Clamp, Hose	2		WY010001-	
15		0513 121 00	* Bolt, Treatment	4		WY010001-	M12X100
16		0558 120 30	* Bolt, Treatment	14		WY010001-	M12X30 P=1.25
17		0595 120 00	* Washer, Treatment	18		WY010001-	M12
18		0517 080 25	* Bolt, Treatment (W/L.W, F.W)	2		WY010001-	M8X25
19		0517 080 20	* Bolt, Treatment (W/L.W, F.W)	14		WY010001-	M8X20
20		0779 002 97	* Hose	M		WY010001-	L=1050
21		0820 803 03	* Tube, Corrugate	M		WY010001-	L=1000
22		0690 074 12	* Clamp, Hose	3		WY010001-	
23		0820 067 04	* Band, Cable	2		WY010001-	
24		0779 002 97	* Hose	M		WY010001-	L=750
25		4006 119 01	* Washer	3		WY010001-	M8
26		0820 067 05	* Band, Cable	1		WY010001-	
27		D493 658 00	* Panel, Sponge	1		WY010001-	
28		D493 659 00	* Panel, Sponge	1		WY010001-	
29		0910 870 05	* Seal	M		WY010001-	L=178
30		0910 870 05	* Seal	M		WY010001-	L=100
31		0668 246 UA	* Radiator Ass'y	1		WY010001-	
32		0668 246 02	** Guide, Fan	1		WY010001-	
33		0668 246 91	** Radiator	1		WY010001-	
34		0668 088 02	*** Radiator, Cap	1		WY010001-	
35		0668 246 06	** Cooler Ass'y, Oil	1		WY010001-	
36		0457 080 16	** Bolt, Treatment (W/Flange)	9		WY010001-	M8X16
37		0668 246 15	** Guard, Fan	1		WY010001-	
38		D458 411 00	* Cover	1		WY010001-	
39		D458 432 00	* Cover	1		WY010001-	
40		D458 274 00	* Cover	1		WY010001-	
41		D458 464 00	* Cover	1		WY010001-	
42		D493 662 00	* Panel, Sponge	1		WY010001-	
43		D493 660 00	* Panel, Sponge	1		WY010001-	
44		D493 507 00	* Panel, Sponge	1		WY010001-	
45		D493 624 00	* Panel, Sponge	1		WY010001-	
46		D493 625 00	* Panel, Sponge	1		WY010001-	
47		D070 553 00	* Hose	1		WY010001-	L=230
48		0690 081 90	* Clamp, Hose	1		WY010001-	
49		D007 240 01	* Shim	AR		WY010001-	t=6

https://truckmanualshub.com/

KEY No.	SUP.	PART No.	DESCRIPTION	Q'TY	CHAN.	SERIAL No.	REMARKS
50		D007 240 02	* Shim	AR		WY010001-	t=3.2
51		0518 100 40	* Bolt, Treatment (W/L.W, F.W)	4		WY010001-	M10X40 P=1.25
52		D493 663 00	* Panel, Sponge	1		WY010001-	
53		4550 718 00	* Seal	M		WY010001-	L=1100
54		D493 661 00	* Panel, Sponge	1		WY010001-	
55		D493 614 00	* Panel, Sponge	1		WY010001-	
56		4550 718 00	* Seal	M		WY010001-	L=100
57		4550 718 00	* Seal	M		WY010001-	L=1000
58		D493 665 00	* Panel, Sponge	1		WY010001-	
59		0668 400 31	* Net	1		WY010001-	
60		0521 080 00	* Nut, Hex. (W/F.W)	2		WY010001-	M8
61		K1G642 72401	* Tank, Surge	1		WY010001-	
62		D458 503 00	* Cover (For A/C)	1		WY010001-	
63		D458 504 00	* Cover (For A/C)	1		WY010001-	
64		D493 700 00	* Panel, Sponge (For A/C)	1		WY010001-	

https://truckmanualshub.com/

[Memo]

https://truckmanualshub.com/

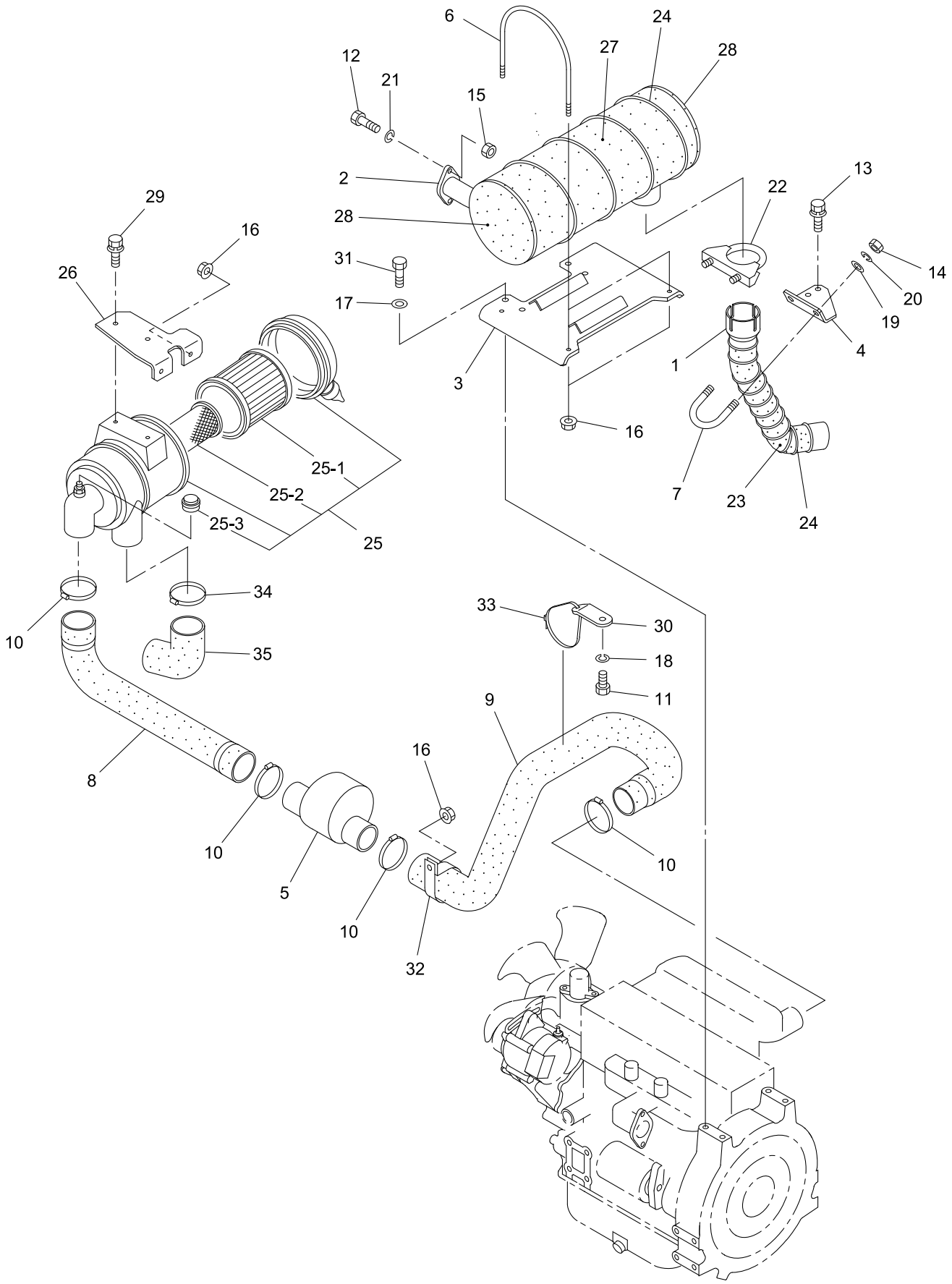

40V4-070200-1

IHI

AIR CLEANER & MUFFLER ASS'Y

MODEL 55V4

SHEET No 7-2

https://truckmanualshub.com/

KEY No.	SUP.	PART No.	DESCRIPTION	Q'TY	CHAN.	SERIAL No.	REMARKS
0	×	F330 676 00	Air Cleaner & Muffler Ass'y	1		WY010001-	
1		D584 141 00	* Pipe, Tail	1		WY010001-	
2		0662 136 UA	* Muffler Ass'y	1		WY010001-	
3		D419 294 00	* Bracket	1		WY010001-	
4		D418 868 00	* Bracket	1		WY010001-	
5		0661 800 29	* Resonator	1		WY010001-	
6		D003 073 00	* Bolt, U	2		WY010001-	
7		4003 021 01	* Bolt, U	1		WY010001-	
8		0779 005 38	* Hose, Air Cleaner	1		WY010001-	
9		0779 005 37	* Hose, Air Cleaner	1		WY010001-	
10		0690 083 13	* Clamp, Hose	4		WY010001-	
11		0555 160 30	* Bolt, Treatment	1		WY010001-	M16X30
12		0514 100 30	* Bolt, Treatment	2		WY010001-	M10X30 P=1.25
13		0518 100 20	* Bolt, Treatment (W/L.W, F.W)	2		WY010001-	M10X20 P=1.25
14		0580 120 00	* Nut, Hex.	2		WY010001-	M12
15		0535 100 00	* Nut, Treatment	2		WY010001-	M10 P=1.25
16		0521 080 00	* Nut, Hex. (W/F.W)	7		WY010001-	M8
17		0595 120 00	* Washer, Treatment	4		WY010001-	M12
18		0590 160 00	* Washer, Lock	1		WY010001-	M16
19		0593 120 00	* Washer, Flat	2		WY010001-	M12
20		0590 120 00	* Washer, Lock	2		WY010001-	M12
21		0590 100 00	* Washer, Lock	2		WY010001-	M10
22		0690 089 36	* Clamp	1		WY010001-	
23		4459 598 00	* Tape, Insulating	1		WY010001-	
24		0322 108 99	* Wire	M		WY010001-	L=1000X4
25		0745 265 UA	* Cleaner, Air	1		WY010001-	
25-1		0745 265 08	** Element Ass'y	1		WY010001-	
25-2		0745 265 09	** Element Ass'y (Inner)	1		WY010001-	
25-3		D525 004 00	** Indicator	1		WY010001-	
26		D419 289 00	* Bracket	1		WY010001-	
27		D493 503 00	* Panel, Sponge	1		WY010001-	
28		D493 504 00	* Panel, Sponge	2		WY010001-	
29		0517 080 25	* Bolt, Treatment (W/L.W, F.W)	2		WY010001-	M8X25
30		D419 496 00	* Bracket	1		WY010001-	
31		0558 120 25	* Bolt, Treatment	4		WY010001-	M12X25 P=1.25
32		D080 100 00	* Clamp, Hose	1		WY010001-	
33		0820 067 10	* Band, Cable	1		WY010001-	
34		0690 083 14	* Clamp, Hose	1		WY010001-	
35		0779 003 59	* Hose	1		WY010001-	

https://truckmanualshub.com/

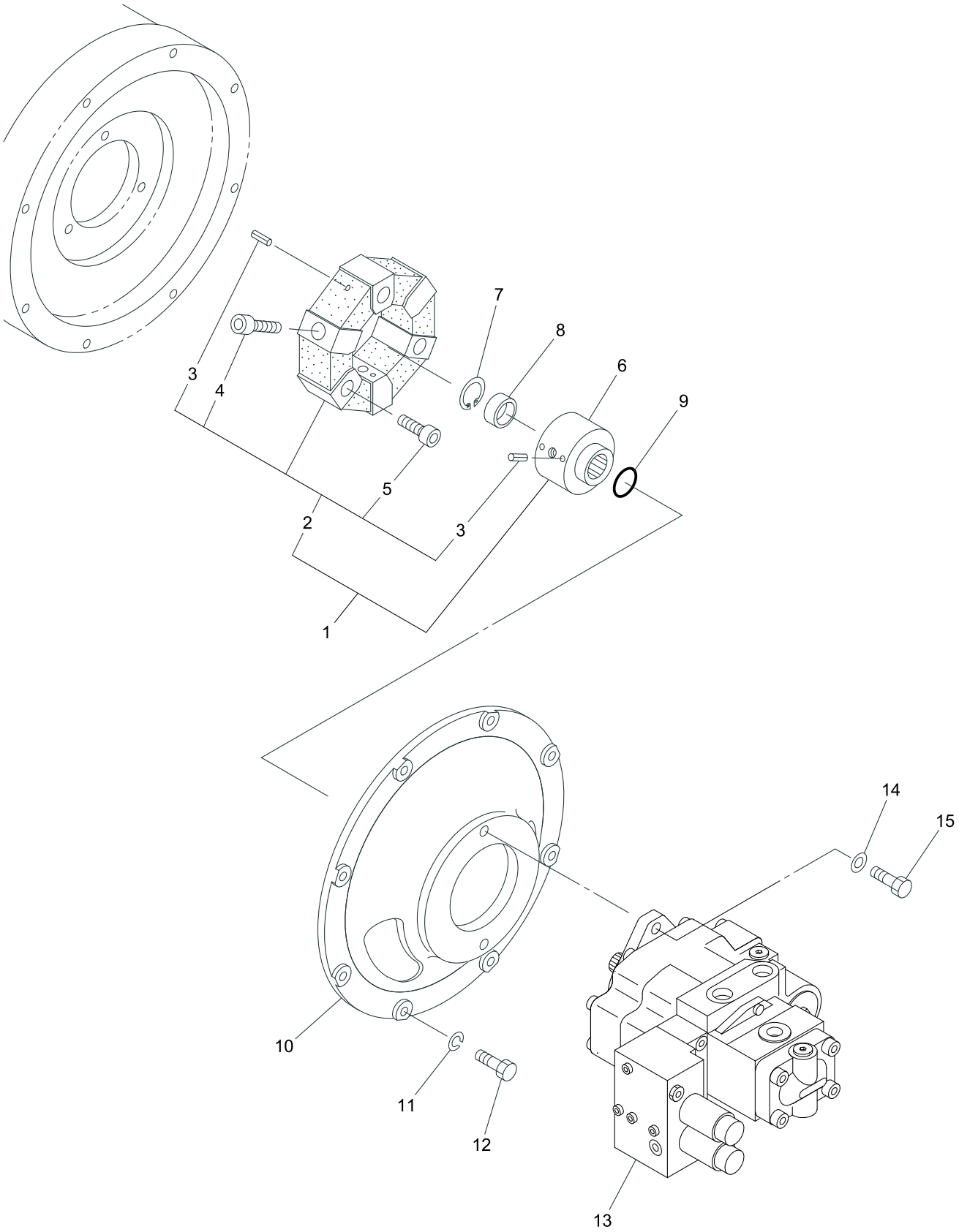

40V4-070300-1

https://truckmanualshub.com/

KEY No.	SUP.	PART No.	DESCRIPTION	Q'TY	CHAN.	SERIAL No.	REMARKS
0	×	F330 677 00	Drive Device, Oil Pump	1		WY010001-	
1		0651 482 UA	* Cupling Ass'y	1		WY010001-	
2		0651 421 UA	** Coupling Ass'y	1		WY010001-	
3		0494 608 10	*** Pin, Spring	9		WY010001-	d=5X10
4		0562 140 45	*** Bolt, Socket Head	3		WY010001-	M14X45
5		0562 140 40	*** Bolt, Socket Head	3		WY010001-	M14X40
6		0651 482 02	** Hub, Coupling	1		WY010001-	
7		0493 500 30	* Ring, Snap	1		WY010001-	d=30
8		0761 721 20	* Cap	1		WY010001-	
9		0760 710 19	* Ring, O	1		WY010001-	P18-90B
10		D230 059 00	* Flange, Pump	1		WY010001-	
11		0590 100 00	* Washer, Lock	8		WY010001-	M10
12		0513 100 30	* Bolt, Treatment	8		WY010001-	M10X30
13	#	0780 162 UA	** Pump Ass'y, Oil	1		WY010001-	Sh. No. 5-7
14		0595 120 00	* Bolt, Treatment	2		WY010001-	M12
15		0513 120 35	* Bolt, Treatment	2		WY010001-	M12X35

7

https://truckmanualshub.com/

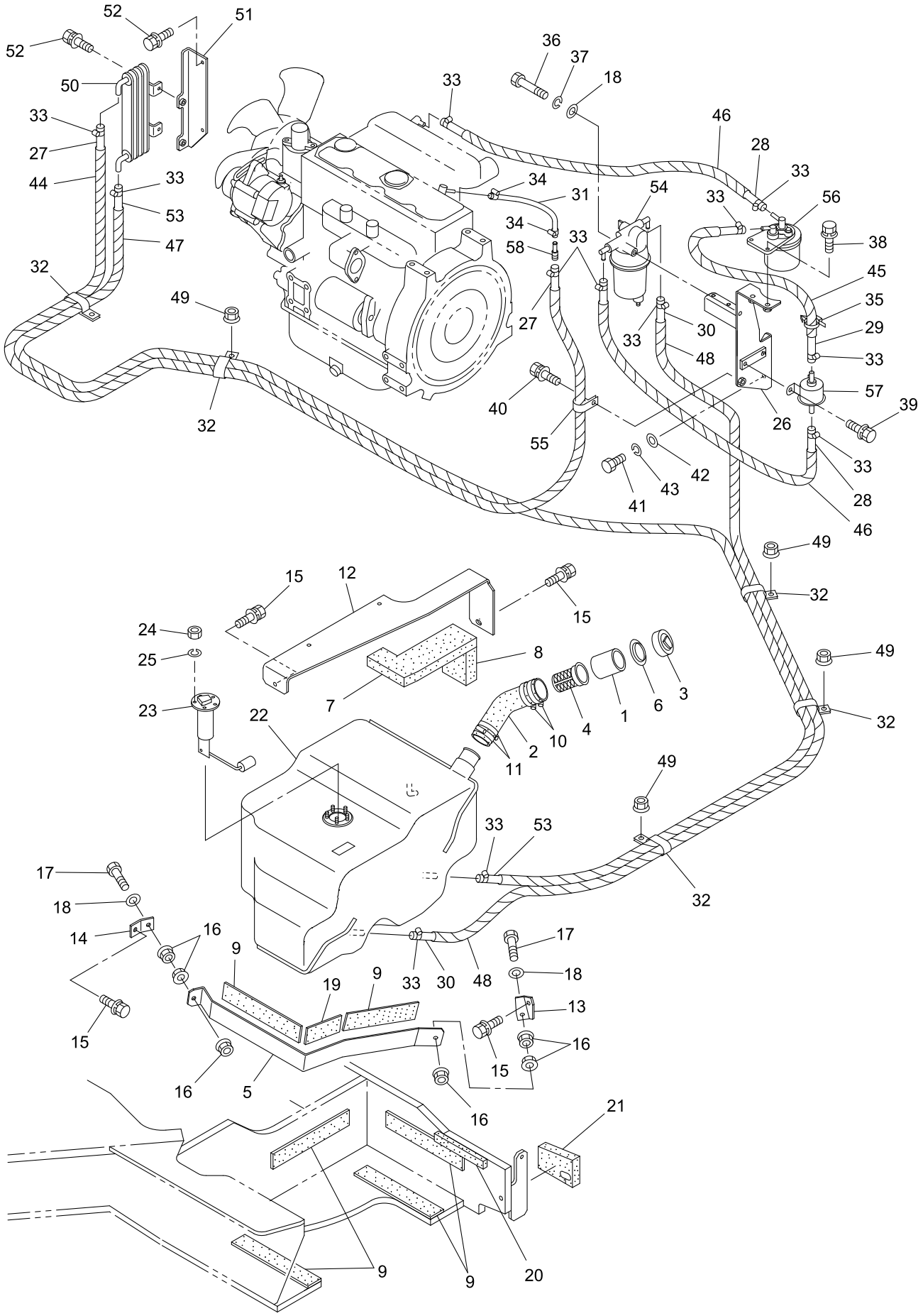

40V4-070400-1

https://truckmanualshub.com/

KEY No.	SUP.	PART No.	DESCRIPTION	Q'TY	CHAN.	SERIAL No.	REMARKS
0	×	F337 318 00	Tank Ass'y, Fuel	1		WY010001-	
0-1	×	F337 321 00	Piping Ass'y, Fuel	1		WY010001-	
1		0729 910 80	* Filter	1		WY010001-	
2		D070 574 00	* Hose	1		WY010001-	
3		0729 910 73	* Cap	1		WY010001-	
4		0729 910 60	* Strainer	1		WY010001-	
5		D083 152 00	* Clamp	1		WY010001-	
6		D550 063 00	* Seal	1		WY010001-	
7		D493 636 00	* Panel, Sponge	1		WY010001-	
8		D493 644 00	* Panel, Sponge	1		WY010001-	
9		D433 496 00	* Plate, Rubber	6		WY010001-	
10		0690 083 14	* Clamp, Hose	2		WY010001-	
11		0690 083 12	* Clamp, Hose	2		WY010001-	
12		D206 825 00	* Frame	1		WY010001-	
13		D418 836 00	* Bracket	1		WY010001-	
14		D419 219 00	* Bracket	1		WY010001-	
15		0518 100 20	* Bolt, Treatment (W/L.W, F.W)	4		WY010001-	M10X20 P=1.25
16		0521 080 00	* Nut, Hex. (W/F.W)	6		WY010001-	M8
17		0551 080 60	* Bolt, Hex.(Full-Thread)	2		WY010001-	M8X60
18		0593 080 00	* Washer, Flat	3		WY010001-	M8
19		D433 504 00	* Plate, Rubber	1		WY010001-	
20		D493 645 00	* Panel, Sponge	1		WY010001-	
21		D493 650 00	* Panel, Sponge	1		WY010001-	
22		D284 229 00	* Tank, Fuel	1		WY010001-	
23		0857 909 UA	* Gauge, Fuel	1		WY010001-	
24		0580 050 00	* Nut, Hex.	5		WY010001-	M5
25		0590 050 00	* Washer, Lock	5		WY010001-	M5
26		D419 265 00	* Bracket	1		WY010001-	
27		4070 572 51	* Hose, Fuel	M		WY010001-	L=2300
28		4070 245 39	* Hose, Fuel	M		WY010001-	L=450X2
29		4070 245 67	* Hose, Fuel	M		WY010001-	L=330
30		4070 245 32	* Hose, Fuel	M		WY010001-	L=1800
31		4070 899 04	* Hose, Fuel	M		WY010001-	L=150
32		4080 000 29	* Clamp, Hose	5		WY010001-	
33		0690 083 03	* Clamp, Hose	12		WY010001-	
34		0690 081 90	* Clamp, Hose	2		WY010001-	
35		0690 082 08	* Clamp, Hose	1		WY010001-	
36		0550 080 70	* Bolt, Hex.	1		WY010001-	M8X70
37		0590 080 00	* Washer, Lock	1		WY010001-	M8
38		0517 080 25	* Bolt, Treatment (W/L.W, F.W)	2		WY010001-	M8X25
39		0517 060 20	* Bolt, Treatment (W/L.W, F.W)	2		WY010001-	M6X20
40		0518 100 20	* Bolt, Treatment (W/L.W, F.W)	1		WY010001-	M10X20 P=1.25
41		0513 100 20	* Bolt, Teratment	2		WY010001-	M10X20
42		0593 100 00	* Washer, Flat	2		WY010001-	M10
43		0590 100 00	* Washer, Lock	2		WY010001-	M10
44		0820 803 04	* Tube, Corrugate	M		WY010001-	L=2200
45		0820 803 04	* Tube, Corrugate	M		WY010001-	L=230
46		0820 803 04	* Tube, Corrugate	M		WY010001-	L=350X2
47		0820 803 04	* Tube, Corrugate	M		WY010001-	L=2550
48		0820 803 04	* Tube, Corrugate	M		WY010001-	L=1700
49		0524 100 00	* Nut, Hex. (W/F.W)	4		WY010001-	M10 P=1.25
50		0668 247 UA	* Cooler, Fuel	1		WY010001-	

https://truckmanualshub.com/

KEY No.	SUP.	PART No.	DESCRIPTION	Q'TY	CHAN.	SERIAL No.	REMARKS
51		D419 195 00	* Bracket	1		WY010001-	
51-1		D419 544 00	* Bracket	1		WY010001-	For A/C
52		0517 080 20	* Bolt, Treatment (W/L.W, F.W)	4		WY010001-	M8X20
53		4070 572 52	* Hose, Fuel	M		WY010001-	L=2650
54		0857 914 UA	* Sedimenter, Water	1		WY010001-	
54-1		0857 914 11	** Element Ass'y	1		WY010001-	
55		4080 000 05	* Clamp, Hose	1		WY010001-	
56		K15221 4317 0	* Cartridge, Fuel Filter	1		WY010001-	
57		KR1401 5135 2	* Pump, Fuel	1		WY010001-	
58		K17490 42360	* Joint, Pipe	1		WY010001-	

7

https://truckmanualshub.com/

[Memo]

https://truckmanualshub.com/

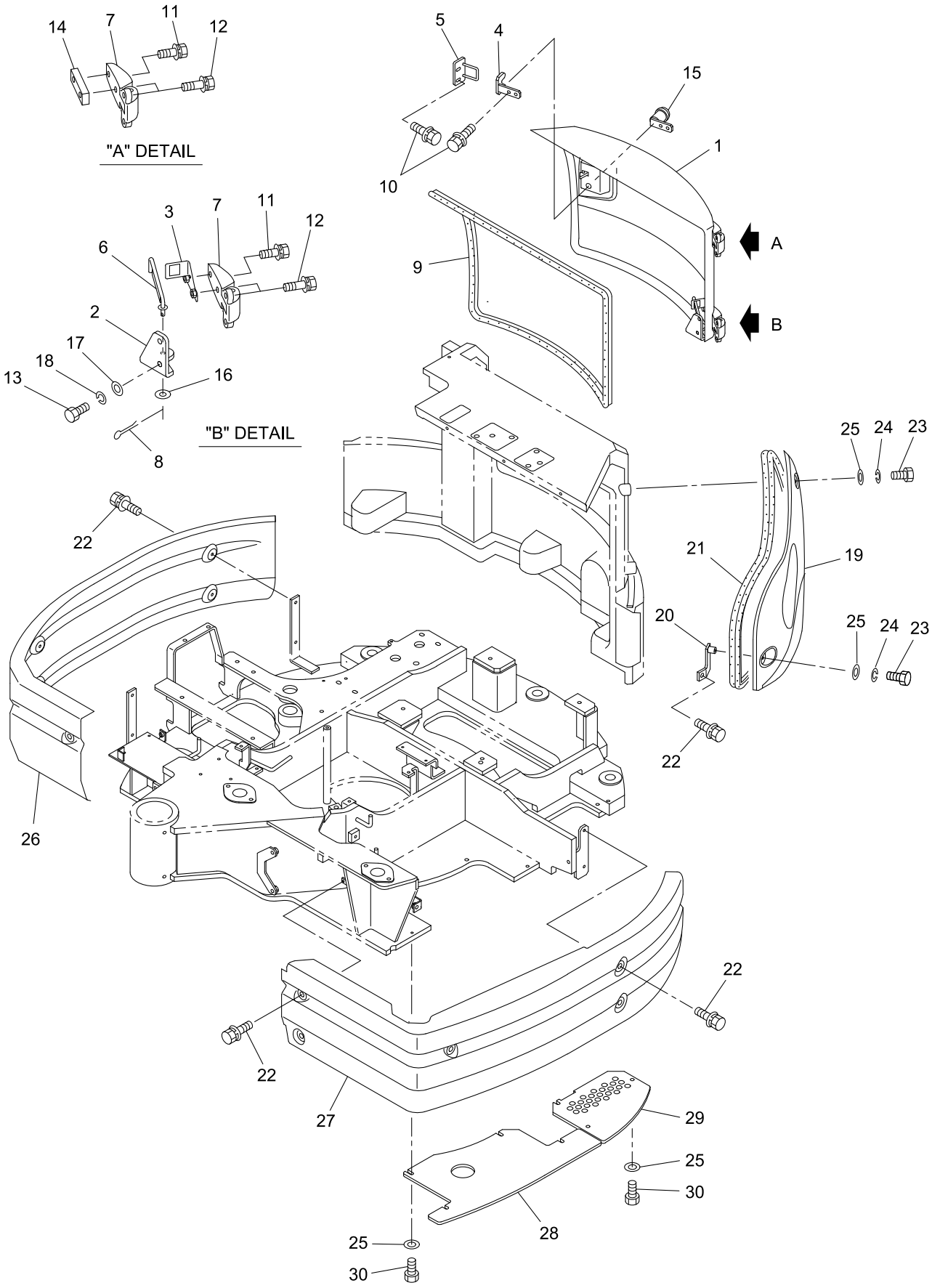

40V4-080100-1

https://truckmanualshub.com/

KEY No.	SUP.	PART No.	DESCRIPTION	Q'TY	CHAN.	SERIAL No.	REMARKS
0	×	F355 190 00	Cover Ass'y	1		WY010001-	
0-1	×	F361 722 00	Cover Ass'y	1		WY010001-	
1		D458 259 00	* Cover	1		WY010001-	
2		D419 542 00	* Bracket	1		WY010001-	
3		D418 908 00	* Bracket	1		WY010001-	
4		D418 909 00	* Bracket	1		WY010001-	
5		D419 323 00	* Bracket	1		WY010001-	
6		D260 552 00	* Stay	1		WY010001-	
7		0690 016 19	* Hinge	2		WY010001-	
8		0599 010 15	* Pin, Cotter	1		WY010001-	d=1.6X15
9		0910 870 05	* Seal	M		WY010001-	L=2500
10		0517 080 16	* Bolt, Treatment (W/L.W, F.W)	4		WY010001-	M8X16
11		0517 080 30	* Bolt, Treatment (W/L.W, F.W)	2		WY010001-	M8X30
12		0517 080 35	* Bolt, Treatment (W/L.W, F.W)	6		WY010001-	M8X35
13		0513 080 20	* Bolt, Treatment	2		WY010001-	M8X20
14		D400 273 00	* Plate	1		WY010001-	
15		0690 220 91	* Lock Ass'y	1		WY010001-	
16		0593 060 00	* Washer, Flat	1		WY010001-	M6
17		0593 080 00	* Washer, Flat	2		WY010001-	M8
18		0590 080 00	* Washer, Lock	2		WY010001-	M8
19		D458 257 00	* Cover	1		WY010001-	
20		D418 945 00	* Bracket	1		WY010001-	
21		0910 870 05	* Seal	M		WY010001-	L=2300
22		0518 100 25	* Bolt, Treatment (W/L.W, F.W)	11		WY010001-	M10X25 P=1.25
23		0550 100 20	* Bolt, Hex.	3		WY010001-	M10X20
24		0590 100 00	* Washer, Lock	3		WY010001-	M10
25		0593 100 00	* Washer, Flat	10		WY010001-	M10
26		D458 059 00	* Cover	1		WY010001-	
27		D458 060 00	* Cover	1		WY010001-	
28		D458 288 00	* Cover	1		WY010001-	
29		D458 468 00	* Cover	1		WY010001-	
30		0480 100 20	* Bolt, Treatment (W/Flange)	7		WY010001-	M10X20 P=1.25

8

https://truckmanualshub.com/

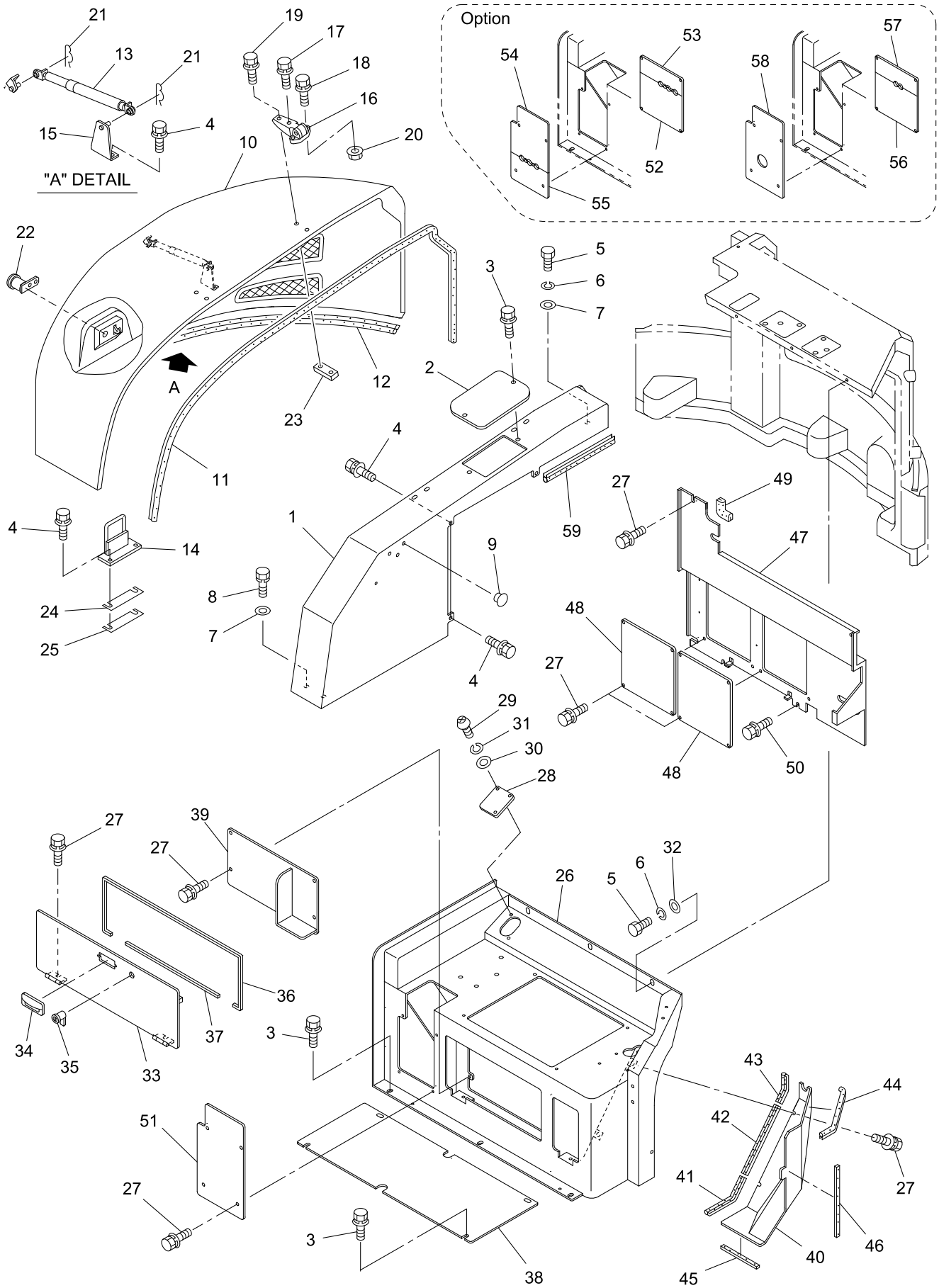

https://truckmanualshub.com/

KEY No.	SUP.	PART No.	DESCRIPTION	Q'TY	CHAN.	SERIAL No.	REMARKS
0	×	F355 190 00	Cover Ass'y	1		WY010001-	
0-1	×	F361 722 00	Cover Ass'y	1		WY010001-	
1		D458 634 00	* Cover	1		WY010001-	
2		D458 279 00	* Cover	1		WY010001-	
3		0518 100 25	* Bolt, Treatment (W/L.W, F.W)	9		WY010001-	M10X25 P=1.25
4		0518 100 20	* Bolt, Treatment (W/L.W, F.W)	7		WY010001-	M10X20 P=1.25
5		0550 100 20	* Bolt, Hex.	4		WY010001-	M10X20
6		0590 100 00	* Washer, Lock	4		WY010001-	M10
7		D006 136 00	* Washer	3		WY010001-	
8		0520 100 20	* Bolt, Treatment (W/L.W)	2		WY010001-	M10X20 P=1.25
9		0690 201 04	* Plug, Hole	3		WY010001-	
10		D458 072 00	* Cover	1		WY010001-	
11		4550 726 00	* Seal	M		WY010001-	L=2300
12		4550 873 00	* Seal	M		WY010001-	L=2150
13		0652 274 UA	* Stay, Dumper	1		WY010001-	
14		D419 450 00	* Bracket	1		WY010001-	
15		D419 276 00	* Bracket	1		WY010001-	
16		0690 016 19	* Hinge	2		WY010001-	
17		0517 080 50	* Bolt, Treatment (W/L.W, F.W)	2		WY010001-	M8X50
18		0517 080 35	* Bolt, Treatment (W/L.W, F.W)	4		WY010001-	M8X35
19		0517 080 40	* Bolt, Treatment (W/L.W, F.W)	2		WY010001-	M8X40
20		0521 080 00	* Nut, Hex. (W/F.W)	4		WY010001-	M8
21		4016 030 04	* Pin, Snap	2		WY010001-	
22		0690 220 91	* Lock Ass'y	1		WY010001-	
23		D400 273 00	* Plate	4		WY010001-	
24		D007 023 00	* Shim	AR		WY010001-	t=2.3
25		D007 034 02	* Shim	AR		WY010001-	t=1.6
26		D206 906 00	* Frame	1		WY010001-	
27		0517 080 20	* Bolt, Treatment (W/L.W, F.W)	18		WY010001-	M8X20
28		D418 970 00	* Bracket	1		WY010001-	
29		4004 364 01	* Bolt, Button Head	2		WY010001-	M6X18
30		0594 060 00	* Washer, Flat	2		WY010001-	M6
31		0596 060 00	* Washer, Lock	2		WY010001-	M6
32		0593 100 00	* Washer, Flat	3		WY010001-	M10
33		D458 236 00	* Cover	1		WY010001-	
34		0690 211 08	* Handle	1		WY010001-	
35		0690 220 92	* Lock Ass'y	1		WY010001-	
36		D551 006 01	* Seal	1		WY010001-	L=1000
37		D551 006 02	* Seal	1		WY010001-	L=410
38		D418 564 00	* Bracket	1		WY010001-	
39		D458 436 00	* Cover	1		WY010001-	
40		D458 461 00	* Cover	1		WY010001-	
41		0910 870 05	* Seal	M		WY010001-	L=160
42		0910 870 05	* Seal	M		WY010001-	L=225
43		0910 870 05	* Seal	M		WY010001-	L=110
44		0910 870 05	* Seal	M		WY010001-	L=270
45		D551 009 04	* Seal	1		WY010001-	L=160
46		D551 009 05	* Seal	1		WY010001-	L=270
47		D458 417 00	* Cover	1		WY010001-	
48		D458 291 00	* Cover	2		WY010001-	
49		0910 870 05	* Seal	M		WY010001-	L=100
50		0518 100 30	* Bolt, Treatment (W/L.W, F.W)	2		WY010001-	M10X30 P=1.25

https://truckmanualshub.com/

KEY No.	SUP.	PART No.	DESCRIPTION	Q'TY	CHAN.	SERIAL No.	REMARKS
51		D458 514 00	* Cover	1		WY010001-	
52		D458 501 00	* Cover	1		WY010001-	For A/C
53		D458 502 00	* Cover	1		WY010001-	For A/C
54		D458 568 00	* Cover	1		WY010001-	For A/C
55		D458 516 00	* Cover	1		WY010001-	For A/C
56		D458 580 00	* Cover	1		WY010001-	For Car Heater
57		D458 581 00	* Cover	1		WY010001-	For Car Heater
58		D458 515 00	* Cover	1		WY010001-	For Car Heater
59		0910 870 05	* Seal	M		WY010001-	L=274

https://truckmanualshub.com/

[Memo]

https://truckmanualshub.com/

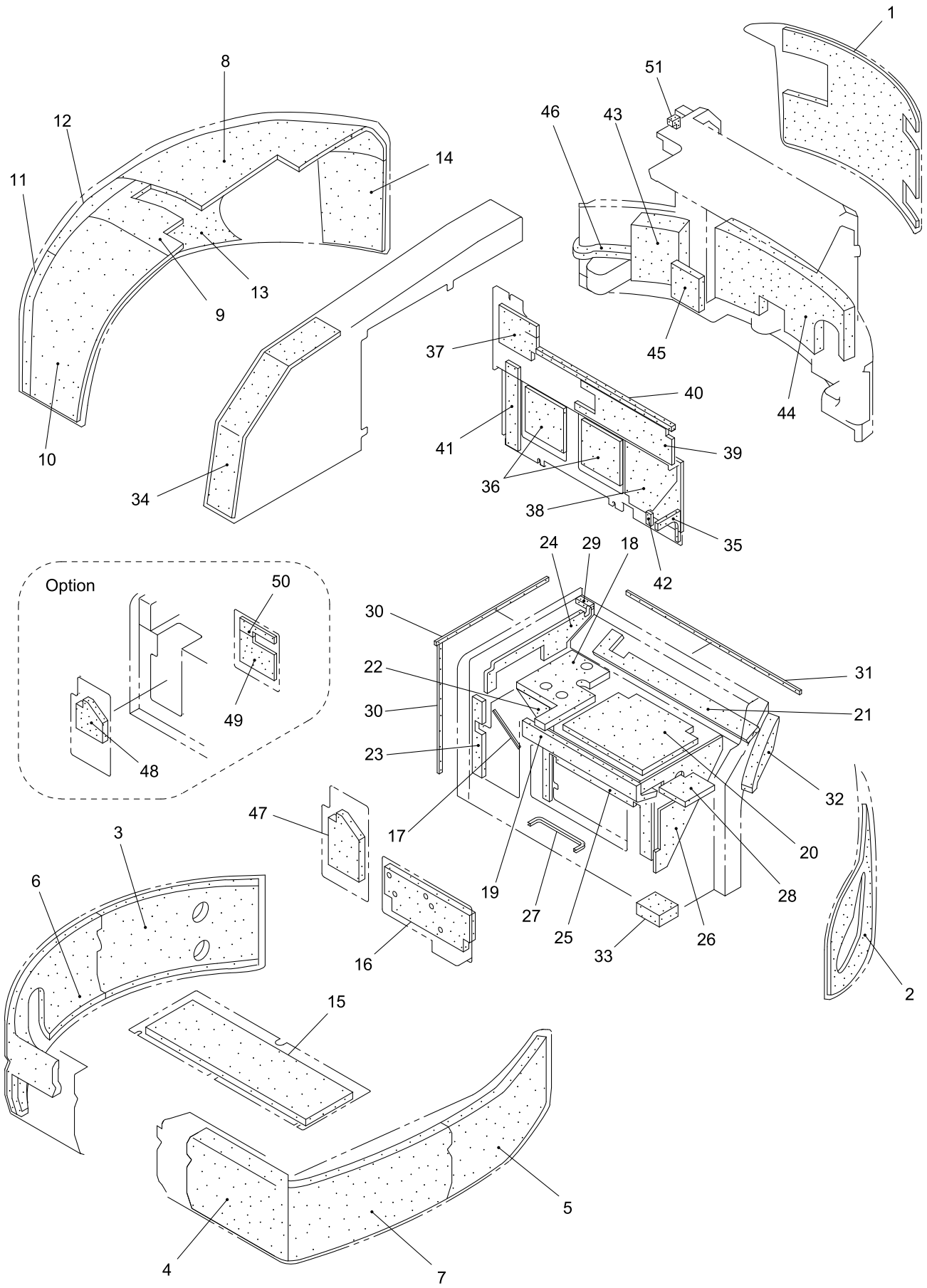

40V4-080300-1

https://truckmanualshub.com/

KEY No.	SUP.	PART No.	DESCRIPTION	Q'TY	CHAN.	SERIAL No.	REMARKS
0	×	F355 190 00	Absorbent Ass'y, Noise	1		WY010001-	
0-1	×	F361 722 00	Absorbent Ass'y, Noise	1		WY010001-	
1		D493 685 00	* Panel, Sponge	1		WY010001-	
2		D493 638 00	* Panel, Sponge	1		WY010001-	
3		D493 622 00	* Panel, Sponge	1		WY010001-	
4		D493 535 00	* Panel, Sponge	1		WY010001-	
5		D493 601 00	* Panel, Sponge	1		WY010001-	
6		D493 599 00	* Panel, Sponge	1		WY010001-	
7		D493 600 00	* Panel, Sponge	1		WY010001-	
8		D493 528 00	* Panel, Sponge	1		WY010001-	
9		D493 529 00	* Panel, Sponge	1		WY010001-	
10		D493 530 00	* Panel, Sponge	1		WY010001-	
11		D493 641 00	* Panel, Sponge	1		WY010001-	
12		D493 686 00	* Panel, Sponge	1		WY010001-	
13		D493 642 00	* Panel, Sponge	1		WY010001-	
14		D493 643 00	* Panel, Sponge	1		WY010001-	
15		D493 434 00	* Panel, Sponge	1		WY010001-	
16		D493 640 00	* Panel, Sponge	1		WY010001-	
17		D551 007 01	* Seal	1		WY010001-	L=155
18		D493 462 00	* Panel, Sponge	1		WY010001-	
19		D493 463 00	* Panel, Sponge	1		WY010001-	
20		D493 478 00	* Panel, Sponge	1		WY010001-	
21		D493 654 00	* Panel, Sponge	1		WY010001-	
22		D493 480 00	* Panel, Sponge	1		WY010001-	
23		D493 481 00	* Panel, Sponge	1		WY010001-	
24		D493 482 00	* Panel, Sponge	1		WY010001-	
25		D493 483 00	* Panel, Sponge	1		WY010001-	
26		D493 484 00	* Panel, Sponge	1		WY010001-	
27		4550 519 00	* Seal	M		WY010001-	L=250
28		D493 679 00	* Panel, Sponge	1		WY010001-	
29		D493 680 00	* Panel, Sponge	1		WY010001-	
30		D551 009 06	* Panel, Sponge	2		WY010001-	
31		D551 009 07	* Panel, Sponge	1		WY010001-	
32		D493 687 00	* Panel, Sponge	1		WY010001-	
33		D493 689 00	* Panel, Sponge	1		WY010001-	
34		D493 637 00	* Panel, Sponge	1		WY010001-	
35		D493 655 00	* Panel, Sponge	1		WY010001-	
36		D493 541 00	* Panel, Sponge	2		WY010001-	
37		D493 692 00	* Panel, Sponge	1		WY010001-	
38		D493 667 00	* Panel, Sponge	1		WY010001-	
39		D493 693 00	* Panel, Sponge	1		WY010001-	
40		D551 008 01	* Panel, Sponge	1		WY010001-	
41		D493 684 00	* Panel, Sponge	1		WY010001-	
42		D493 656 00	* Panel, Sponge	1		WY010001-	
43		D493 681 00	* Panel, Sponge	1		WY010001-	
44		D493 516 00	* Panel, Sponge	1		WY010001-	
45		D493 519 00	* Panel, Sponge	1		WY010001-	
46		D493 682 00	* Panel, Sponge	1		WY010001-	
47		D493 721 00	* Panel, Sponge	1		WY010001-	
48		D493 696 00	* Panel, Sponge	1		WY010001-	For A/C
49		D493 698 00	* Panel, Sponge	1		WY010001-	For A/C
50		D493 699 00	* Panel, Sponge	1		WY010001-	For A/C

https://truckmanualshub.com/

KEY No.	SUP.	PART No.	DESCRIPTION	Q'TY	CHAN.	SERIAL No.	REMARKS
51		D493 733 00	* Panel, Sponge	1		WY010001-	

8

https://truckmanualshub.com/

[Memo]

https://truckmanualshub.com/

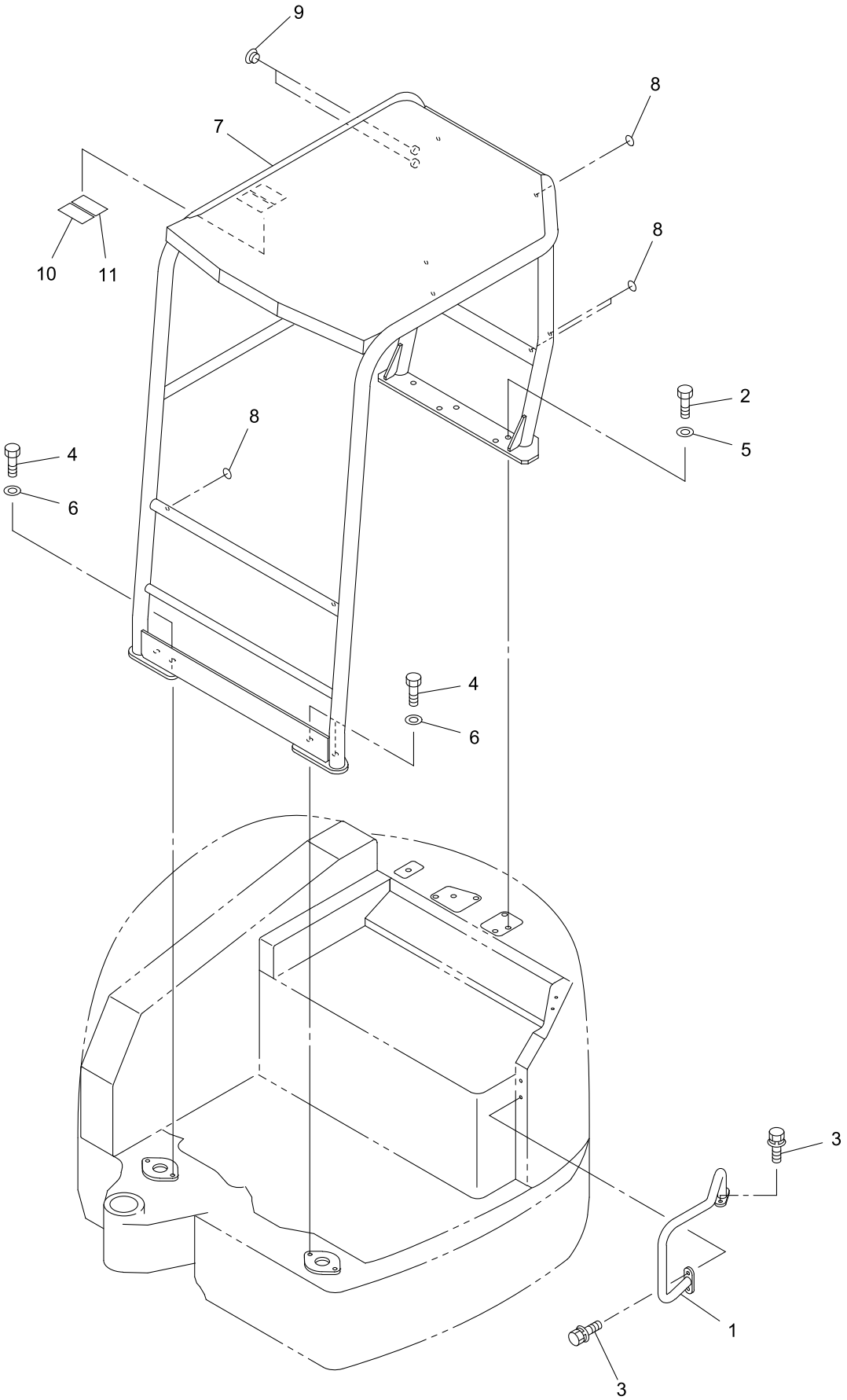

40V4-080400-1

https://truckmanualshub.com/

KEY No.	SUP.	PART No.	DESCRIPTION	Q'TY	CHAN.	SERIAL No.	REMARKS
0	×	F355 211 00	Canopy Ass'y (For Rops)	1		WY010001-	
0-1	×	F355 221 00	Canopy Ass'y (For Tops/Rops)	1		WY010001-	
1		D470 805 00	* Guard	1		WY010001-	
2		0555 160 50	* Bolt, Treatment	5		WY010001-	M16X50
3		0439 100 25	* Bolt, Treatment (W/L.W, F.W)	4		WY010001-	M10X25 P=1.25
4		0555 120 40	* Bolt, Treatment	4		WY010001-	M12X40
5		0595 160 00	* Washer, Treatment	5		WY010001-	M16
6		0595 120 00	* Washer, Treatment	4		WY010001-	M12
7		D206 875 00	* Frame	1		WY010001-	
8		D405 272 00	* Seal	8		WY010001-	
9		0690 201 08	* Plug, Hole	2		WY010001-	M10
10		D408 376 00	* Decal (For Tops)	1		WY010001-	
11		D408 375 00	* Decal (For Rops)	1		WY010001-	

https://truckmanualshub.com/

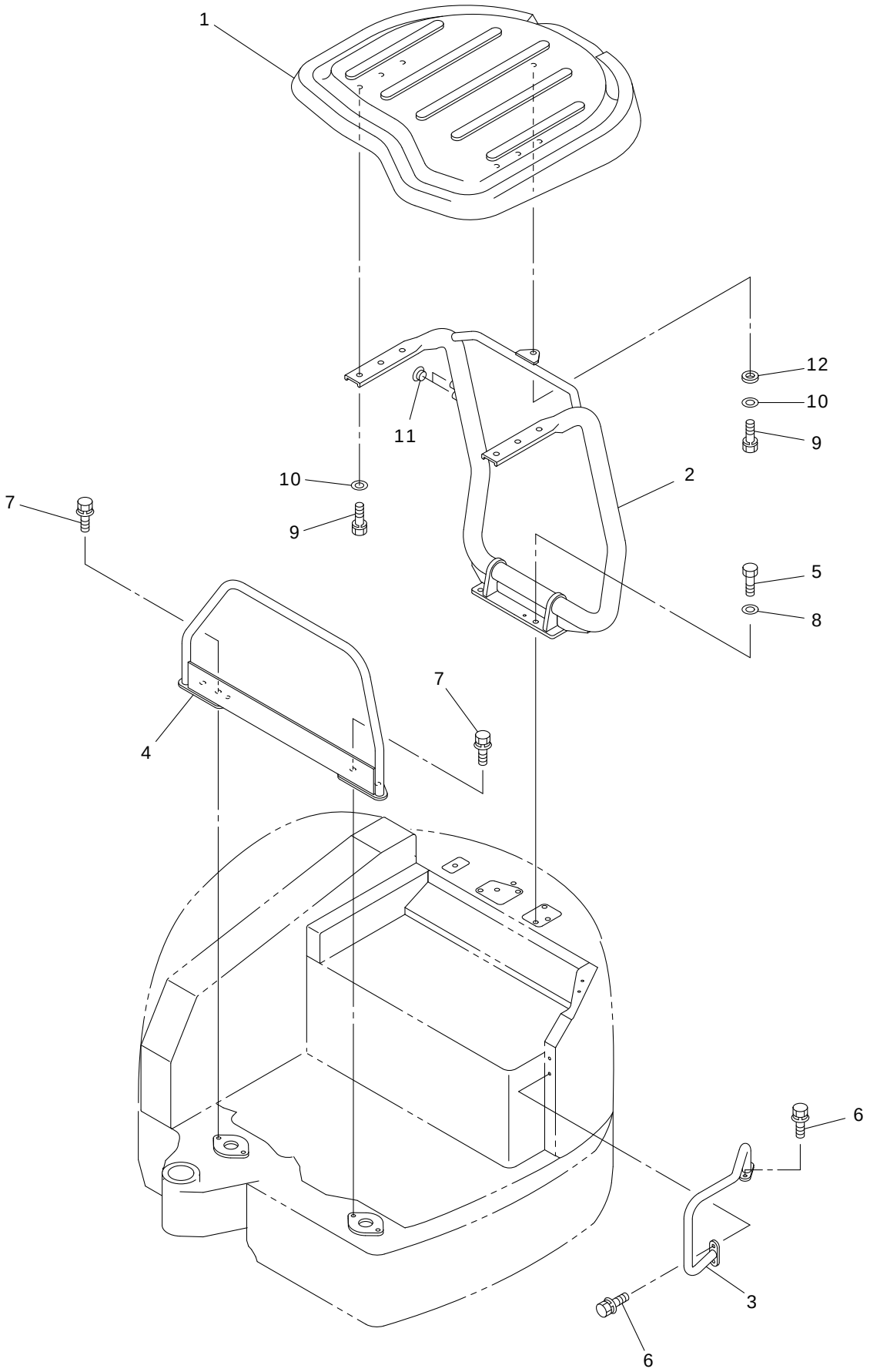

V4ALL-08040A-1

https://truckmanualshub.com/

KEY No.	SUP.	PART No.	DESCRIPTION	Q'TY	CHAN.	SERIAL No.	REMARKS
0	×	F355 197 00	Canopy Ass'y	1		WY010001-	
1		D448 005 00	* Canopy	1		WY010001-	
2		D206 873 00	* Frame	1		WY010001-	
3		D470 805 00	* Guard	1		WY010001-	
4		D470 700 00	* Guard	1		WY010001-	
5		0555 160 50	* Bolt, Treatment	4		WY010001-	M16X50
6		0439 100 25	* Bolt, Treatment (W/L.W, F.W)	4		WY010001-	M10X25 P=1.25
7		0518 120 40	* Bolt, Treatment (W/L.W, F.W)	4		WY010001-	M12X40 P=1.25
8		0595 160 00	* Washer, Treatment	4		WY010001-	M16
9		0519 080 25	* Bolt, Treatment (W/L.W)	7		WY010001-	M8X25
10		4006 119 01	* Washer	7		WY010001-	M8
11		0690 201 08	* Plug	2		WY010001-	M10
12		4006 386 00	* Washer, Rubber	1		WY010001-	

8

https://truckmanualshub.com/

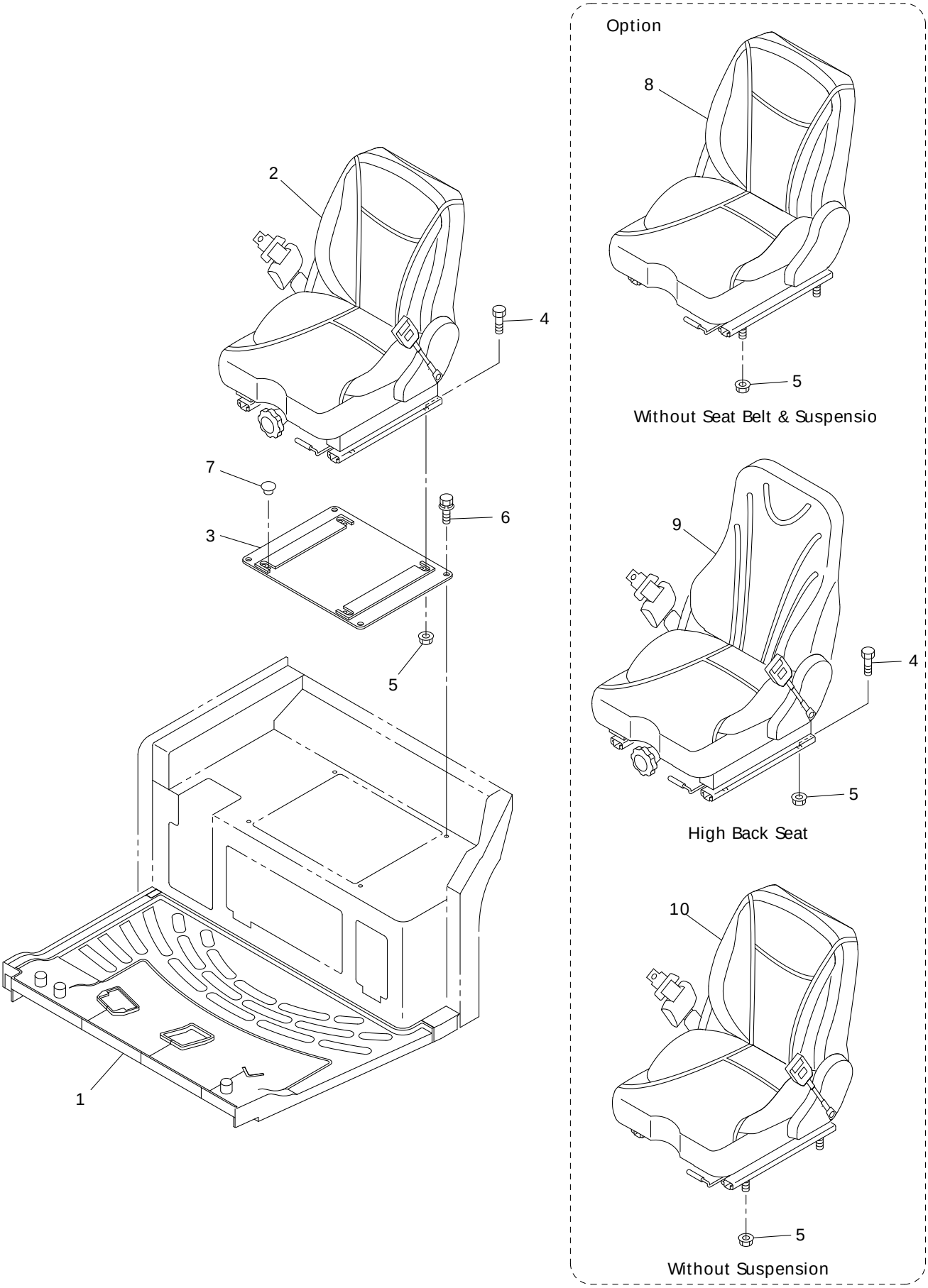

V4ALL-080500-1

https://truckmanualshub.com/

KEY No.	SUP.	PART No.	DESCRIPTION	Q'TY	CHAN.	SERIAL No.	REMARKS
0	×	F355 184 00	Seat Ass'y, Operator (W/Suspension)	1		WY010001-	
0-1	×	F355 183 00	Seat Ass'y, Operator	1		WY010001-	
0-2	×	F355 185 00	Seat Ass'y, Operator	1		WY010001-	
0-3	×	F355 196 00	Seat Ass'y, Operator	1		WY010001-	
0-4	×	F353 206 00	Mat Ass'y	1		WY010001-	
1		D581 191 00	* Mat (For Canopy)	1		WY010001-	STD
1-1		D581 203 00	* Mat (For Canopy, Pedal)	1		WY010001-	
1-2		D581 204 00	* Mat (For Cabin)	1		WY010001-	
1-3		D581 205 00	* Mat (For Cabin, Pedal)	1		WY010001-	
2		0655 563 UA	* Seat, Operator (W/Suspension)	1		WY010001-	W/Seat Belt
2-1		0655 563 01	** Seat Ass'y, Back	1		WY010001-	
2-2		0655 563 02	** Seat Ass'y, Cushion	1		WY010001-	
2-3		0655 563 03	** Suspension Ass'y	1		WY010001-	
2-4		0655 563 04	** Rail Ass'y, Slid (L.H)	1		WY010001-	
2-5		0655 563 05	** Rail Ass'y, Slid (R.H)	1		WY010001-	
2-6		0655 563 10	** Belt Ass'y, Seat	1		WY010001-	
3		D419 344 00	* BRACKET	1		WY010001-	
4		0550 080 20	* Bolt, Hex.	4		WY010001-	M8X20
5		0521 080 00	* Nut, Hex. (W/F.W)	4		WY010001-	M8
6		0439 100 20	* Bolt, Treatment (W/L.W, F.W)	4		WY010001-	M10X20 P=1.25
7		0690 201 09	* Plug	4		WY010001-	
8		0655 567 UA	* Seat, Operator (W/O Seat Belt)	1		WY010001-	
9		0655 568 UA	* Seat, Operator (High Back Seat)	1		WY010001-	Leather
9-1		0655 569 UA	* Seat, Operator (High Back Seat)	1		WY010001-	Fabric
9-2		0655 568 01	** Seat Ass'y, Back	1		WY010001-	Leather
9-3		0655 569 01	** Seat Ass'y, Back	1		WY010001-	Fabric
9-4		0655 569 02	** Seat Ass'y, Cushion	1		WY010001-	Fabric
10		0655 564 UA	* Seat, Operator (Leather)	1		WY010001-	W/O Suspension

8

https://truckmanualshub.com/

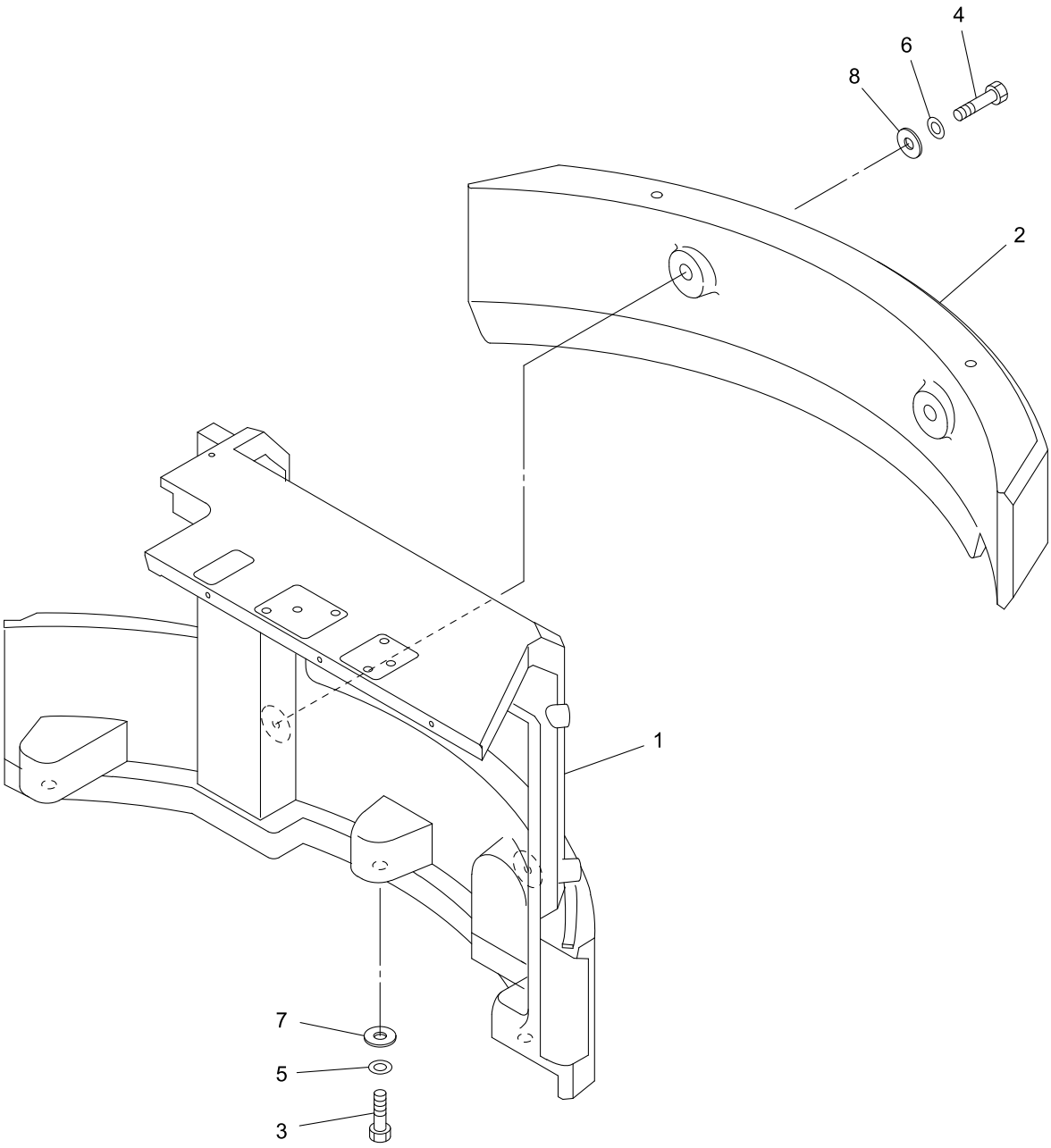

50V4-080600-1

https://truckmanualshub.com/

KEY No.	SUP.	PART No.	DESCRIPTION	Q'TY	CHAN.	SERIAL No.	REMARKS
0	×	F373 220 00	Weight Ass'y, Counter	1		WY010001-	
1		D206 835 00	* Weight, Counter	1		WY010001-	
2		D206 836 00	* Weight, Counter	1		WY010001-	
3		0555 241 00	* Bolt, Treatment	3		WY010001-	M24X100
4		0555 161 30	* Bolt, Treatment	2		WY010001-	M16X130
5		0595 240 00	* Washer, Treatment	3		WY010001-	M24
6		0595 160 00	* Washer, Treatment	2		WY010001-	M16
7		D006 032 00	* Washer	3		WY010001-	M24
8		D006 038 00	* Washer	2		WY010001-	

8

https://truckmanualshub.com/

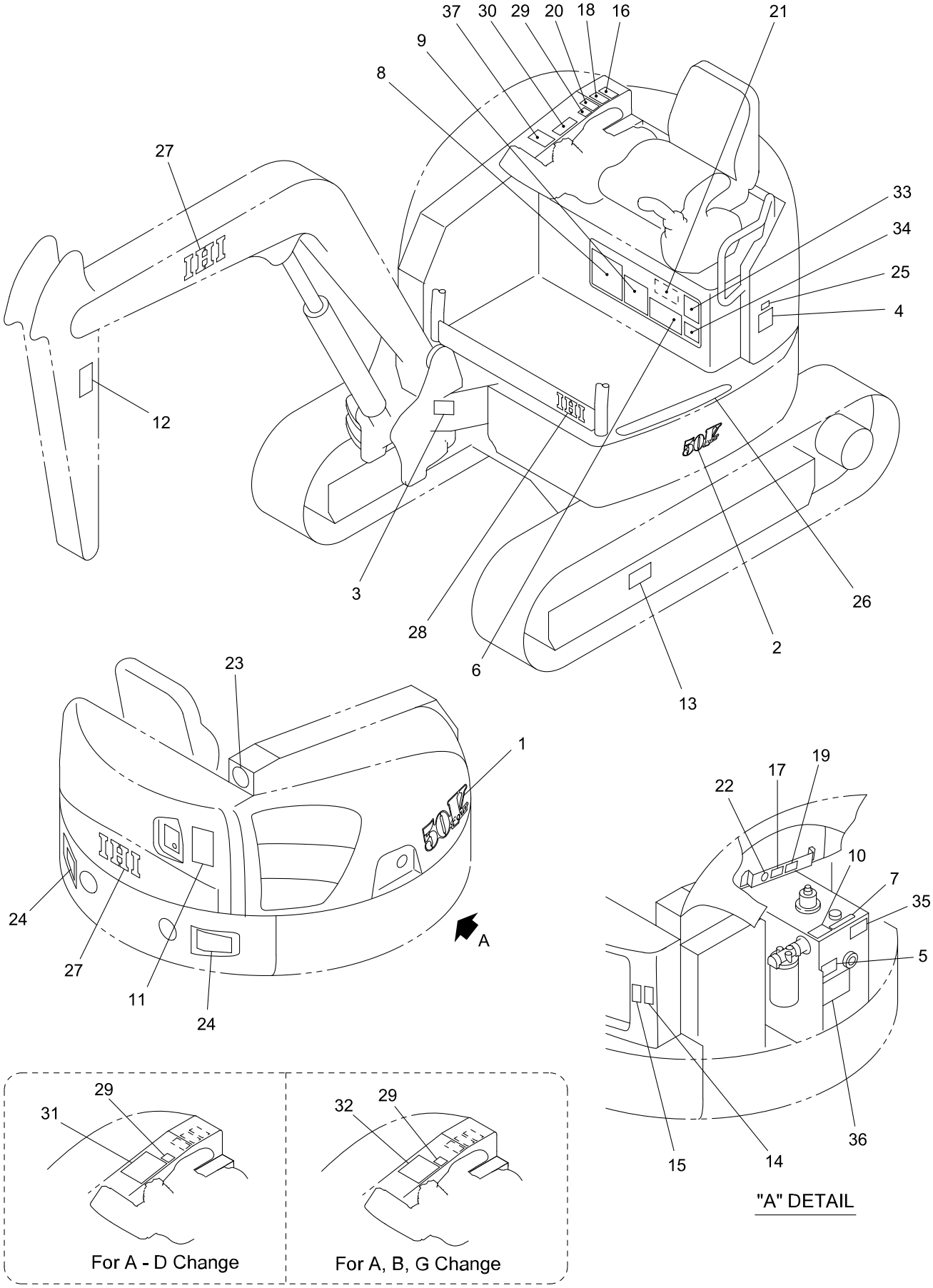

50V4-080700-1

https://truckmanualshub.com/

KEY No.	SUP.	PART No.	DESCRIPTION	Q'TY	CHAN.	SERIAL No.	REMARKS
0	×	F377 850 00	Decal Ass'y	1		WY010001-	
0-1	×	F377 854 00	Decal Ass'y	1		WY010001-	
0-2	×	F377 856 00	Decal Ass'y	1		WY010001-	
1		D408 408 00	* Decal (Model)	1		WY010001-	
2		D408 417 00	* Decal (Model)	1		WY010001-	
3	×	D405 094 00	* Decal (Serial No.)	1		WY010001-	
3-1		0497 035 00	* Screw, Drive	4		WY010001-	d=3
4		D408 324 00	* Decal (Oil)	1		WY010001-	
5		D406 490 00	* Decal (Oil Check)	1		WY010001-	
6		D408 313 00	* Decal (Lub. Chart)	1		WY010001-	
7		4447 479 00	* Decal (Oil)	1		WY010001-	
8		D408 325 00	* Decal (Engine Daily Check)	1		WY010001-	
9		D406 597 00	* Decal (Safety Works)	1		WY010001-	
10		D408 328 00	* Decal (Tank Decompression)	1		WY010001-	
11		D405 450 00	* Decal (Safety Swing)	1		WY010001-	
12		D405 454 00	* Decal (Caution)	2		WY010001-	
13		D405 455 00	* Decal (Caution)	2		WY010001-	
14		D405 424 00	* Decal (Caution)	1		WY010001-	
15		D405 452 00	* Decal (Caution)	1		WY010001-	
16		D405 332 00	* Decal (Caution)	1		WY010001-	
17		D405 462 00	* Decal (Caution)	1		WY010001-	
18		D405 451 00	* Decal (Caution)	1		WY010001-	
19		D405 463 00	* Decal (Caution)	1		WY010001-	
20		D405 449 00	* Decal (Caution)	1		WY010001-	
21		D405 373 00	* Decal (Caution)	1		WY010001-	
22		4407 035 00	* Decal (Anti-Freezing Solution)	1		WY010001-	
23		D406 631 00	* Decal (Environment)	1		WY010001-	
24		D408 371 00	* Decal (Reflector)	2		WY010001-	
25		D407 943 00	* Decal (EPA Regulation)	1		WY010001-	
26		D408 370 00	* Plate, Nonslip	1		WY010001-	
27		D408 402 00	* Decal (IHI)	3		WY010001-	
28		D408 403 00	* Decal (IHI)	1		WY010001-	
29		D406 602 00	* Decal (Blade, Pedal)	1		WY010001-	
30		D406 603 00	* Decal (Control A)	1		WY010001-	
30-1		D406 604 00	* Decal (Control B)	1		WY010001-	
30-2		D406 605 00	* Decal (Control C)	1		WY010001-	
30-3		D406 606 00	* Decal (Control D)	1		WY010001-	
30-4		D406 608 00	* Decal (Control G)	1		WY010001-	
31		D406 609 00	* Decal (Control A-D)	1		WY010001-	
32		D406 610 00	* Decal (Control A, B, G)	1		WY010001-	
33		D408 318 00	* Decal (Specification)	1		WY010001-	
34		D408 229 00	* Decal (Bucket Specification)	1		WY010001-	
35		4447 874 00	* Decal (Spare Piping Change)	1		WY010001-	
36		4447 653 00	* Decal (Breaker Cation)	1		WY010001-	
37		D408 354 00	* Decal (Spare Pedal)	1		WY010001-	

https://truckmanualshub.com/

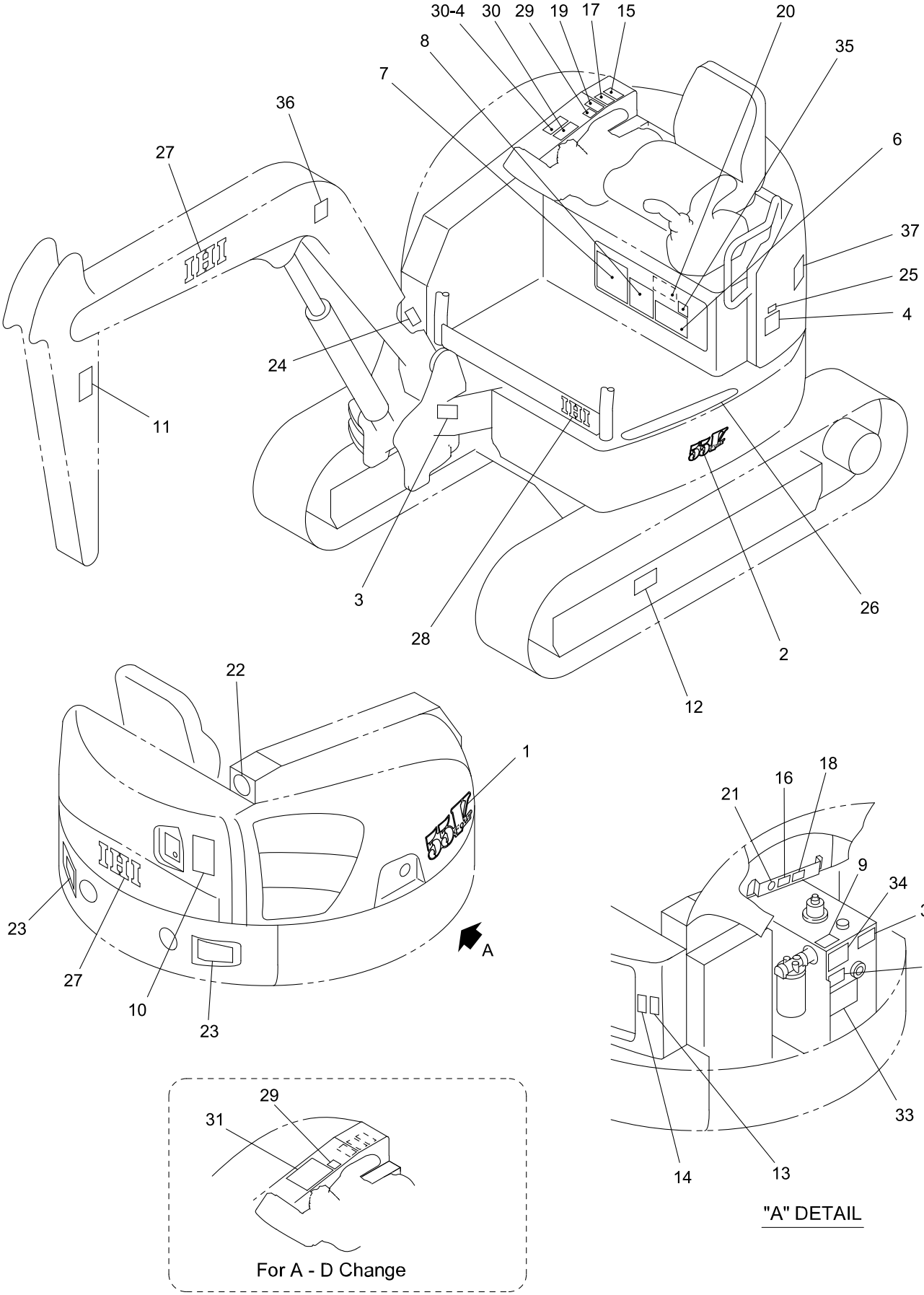

50V4-08070A-1

https://truckmanualshub.com/

KEY No.	SUP.	PART No.	DESCRIPTION	Q'TY	CHAN.	SERIAL No.	REMARKS
0	×	F377 850 00	Decal Ass'y	1		WY010001-	
0-1	×	F377 854 00	Decal Ass'y	1		WY010001-	
1		D408 412 00	* Decal (Model)	1		WY010001-	
2		D408 421 00	* Decal (Model)	1		WY010001-	
3	×	D405 094 00	* Decal (Serial No.)	1		WY010001-	
3-1	×	D405 091 00	* Decal (Serial No.) (CE)	1		WY010001-	
3-2		0497 035 00	* Screw, Drive	4		WY010001-	d=3
4		4407 974 00	* Decal (Oil)	1		WY010001-	
5		D406 504 00	* Decal (Oil Check)	1		WY010001-	
6		D408 355 00	* Decal (Lub. Chart)	1		WY010001-	
7		D408 326 00	* Decal (Engine Daily Check)	1		WY010001-	
8		4406 458 00	* Decal (Safety Works)	1		WY010001-	
9		D408 424 00	* Decal (Tank Decompression)	1		WY010001-	
10		D405 507 00	* Decal (Safety Swing)	1		WY010001-	
11		D405 511 00	* Decal (Caution)	2		WY010001-	
12		D405 505 00	* Decal (Caution)	2		WY010001-	
13		D405 366 00	* Decal (Caution)	1		WY010001-	
14		D405 509 00	* Decal (Caution)	1		WY010001-	
15		D405 359 00	* Decal (Caution)	1		WY010001-	
16		D405 503 00	* Decal (Caution)	1		WY010001-	
17		D405 508 00	* Decal (Caution)	1		WY010001-	
18		D405 504 00	* Decal (Caution)	1		WY010001-	
19		D405 506 00	* Decal (Caution)	1		WY010001-	
20		D405 323 00	* Decal (Caution)	1		WY010001-	
21		4407 035 00	* Decal (Anti-Freezing Solution)	1		WY010001-	
22		D406 783 00	* Decal (Environment)	1		WY010001-	
23		D408 371 00	* Decal (Reflector)	2		WY010001-	
24	×	D405 097 00	* Decal (New Machine)	1		WY010001-	
25		D407 943 00	* Decal (EPA Regulation)	1		WY010001-	
26		D408 370 00	* Plate, Nonslip	1		WY010001-	
27		D408 402 00	* Decal (IHI)	3		WY010001-	
28		D408 403 00	* Decal (IHI)	1		WY010001-	
29		D406 602 00	* Decal (Blade, Pedal)	1		WY010001-	
30		D406 603 00	* Decal (Control A)	1		WY010001-	
30-1		D406 604 00	* Decal (Control B)	1		WY010001-	
30-2		D406 605 00	* Decal (Control C)	1		WY010001-	
30-3		D406 606 00	* Decal (Control D)	1		WY010001-	
30-4		D406 607 00	* Decal (Control F)	1		WY010001-	
31		D406 609 00	* Decal (Control A-D)	1		WY010001-	
32		4448 651 00	* Decal (Spare Piping Change)	1		WY010001-	
33		4447 857 00	* Decal (Breaker Cation)	1		WY010001-	
34		D408 322 00	* Decal (Boom Lowering)(CE)	1		WY010001-	
35		4448 474 00	* Decal (Transport Fix)(CE)	1		WY010001-	
36		D408 347 00	* Decal (Lifting Procedures)(CE)	1		WY010001-	
37		D406 032 00	* Decal (Noise 97)(CE)	1		WY010001-	

https://truckmanualshub.com/

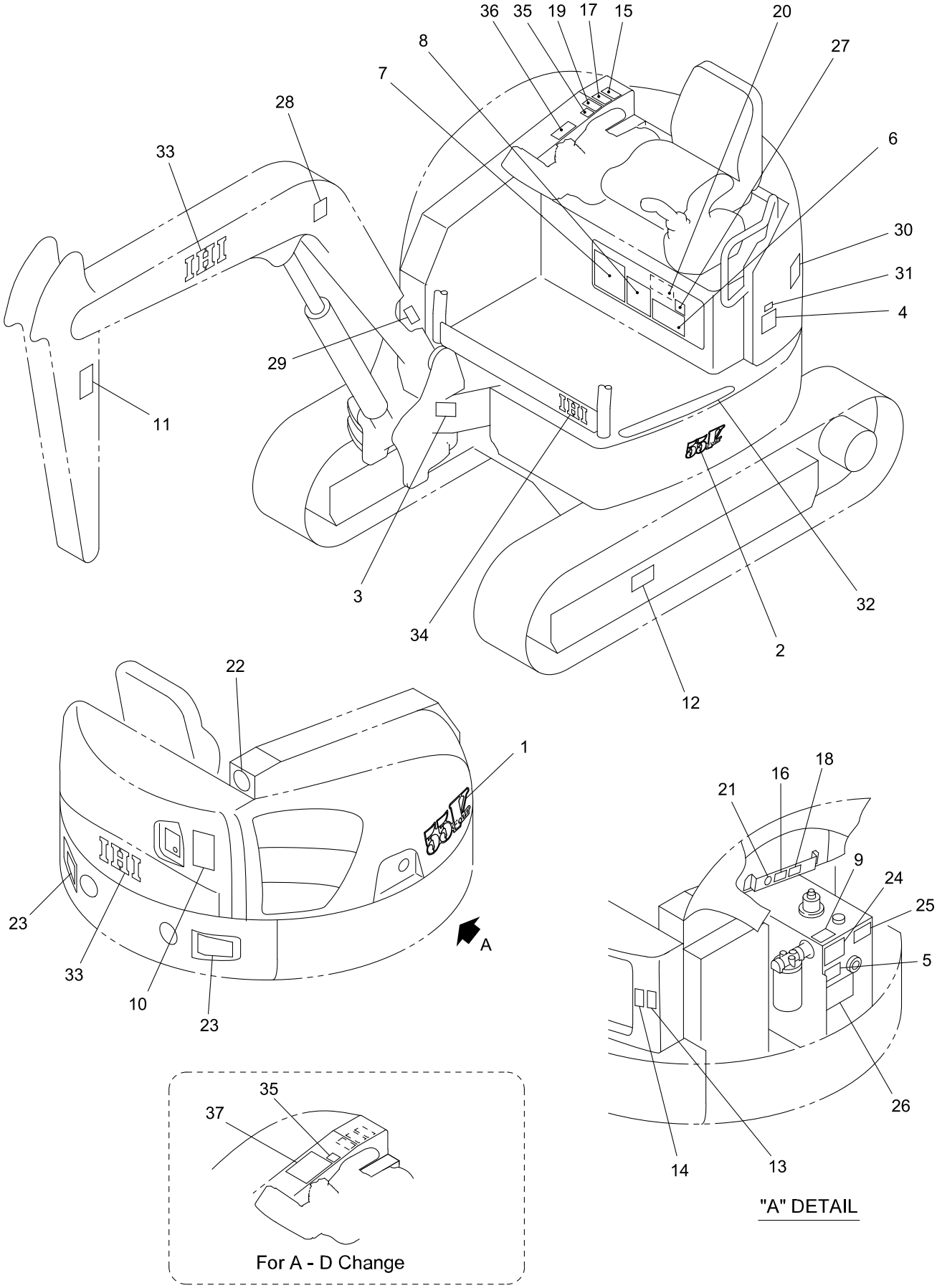

50V4-08070B-1

https://truckmanualshub.com/

KEY No.	SUP.	PART No.	DESCRIPTION	Q'TY	CHAN.	SERIAL No.	REMARKS
0	×	F377 850 00	Decal Ass'y	1		WY010001-	
0-1	×	F377 854 00	Decal Ass'y	1		WY010001-	
1		D408 412 00	* Decal (Model)	1		WY010001-	
2		D408 421 00	* Decal (Model)	1		WY010001-	
3	×	D405 091 00	* Decal (Serial No.)	1		WY010001-	
3-1		0497 035 00	* Screw, Drive	4		WY010001-	d=3
4		4405 457 00	* Decal (Oil)	1		WY010001-	
5		D406 558 00	* Decal (Oil Check)	1		WY010001-	
6		D408 360 00	* Decal (Lub. Chart)	1		WY010001-	
7		D408 332 00	* Decal (Engine Daily Check)	1		WY010001-	
8		4448 584 00	* Decal (Safety Works)	1		WY010001-	
9		D408 429 00	* Decal (Tank Decompression)	1		WY010001-	
10		D405 507 00	* Decal (Safety Swing)	1		WY010001-	
11		D405 511 00	* Decal (Caution)	2		WY010001-	
12		D405 505 00	* Decal (Caution)	2		WY010001-	
13		D405 366 00	* Decal (Caution)	1		WY010001-	
14		D405 509 00	* Decal (Caution)	1		WY010001-	
15		D405 359 00	* Decal (Caution)	1		WY010001-	
16		D405 503 00	* Decal (Caution)	1		WY010001-	
17		D405 508 00	* Decal (Caution)	1		WY010001-	
18		D405 504 00	* Decal (Caution)	1		WY010001-	
19		D405 506 00	* Decal (Caution)	1		WY010001-	
20		D405 559 00	* Decal (Caution)	1		WY010001-	
21		4448 573 00	* Decal (Anti-Freezing Solution)	1		WY010001-	
22		D406 783 00	* Decal (Environment)	1		WY010001-	
23		D408 371 00	* Decal (Reflector)	2		WY010001-	
24		D408 338 00	* Decal (Boom Lowering)	1		WY010001-	
25		4449 003 00	* Decal (Spare Piping Change)	1		WY010001-	
26		4448 587 00	* Decal (Breaker Cation)	1		WY010001-	
27		4448 562 00	* Decal (Transport Fix)	1		WY010001-	
28		D408 352 00	* Decal (Lifting Procedures)	1		WY010001-	
29	×	D405 097 00	* Decal (New Machine)	1		WY010001-	
30		D406 032 00	* Decal (Noise 97)	1		WY010001-	
31		D407 943 00	* Decal (EPA Regulation)	1		WY010001-	
32		D408 370 00	* Plate, Nonslip	1		WY010001-	
33		D408 402 00	* Decal (IHI)	3		WY010001-	
34		D408 403 00	* Decal (IHI)	1		WY010001-	
35		D406 602 00	* Decal (Blade, Pedal)	1		WY010001-	
36		D406 603 00	* Decal (Control A)	1		WY010001-	
36-1		D406 604 00	* Decal (Control B)	1		WY010001-	
36-2		D406 605 00	* Decal (Control C)	1		WY010001-	
36-3		D406 606 00	* Decal (Control D)	1		WY010001-	
37		D406 609 00	* Decal (Control A-D)	1		WY010001-	

https://truckmanualshub.com/

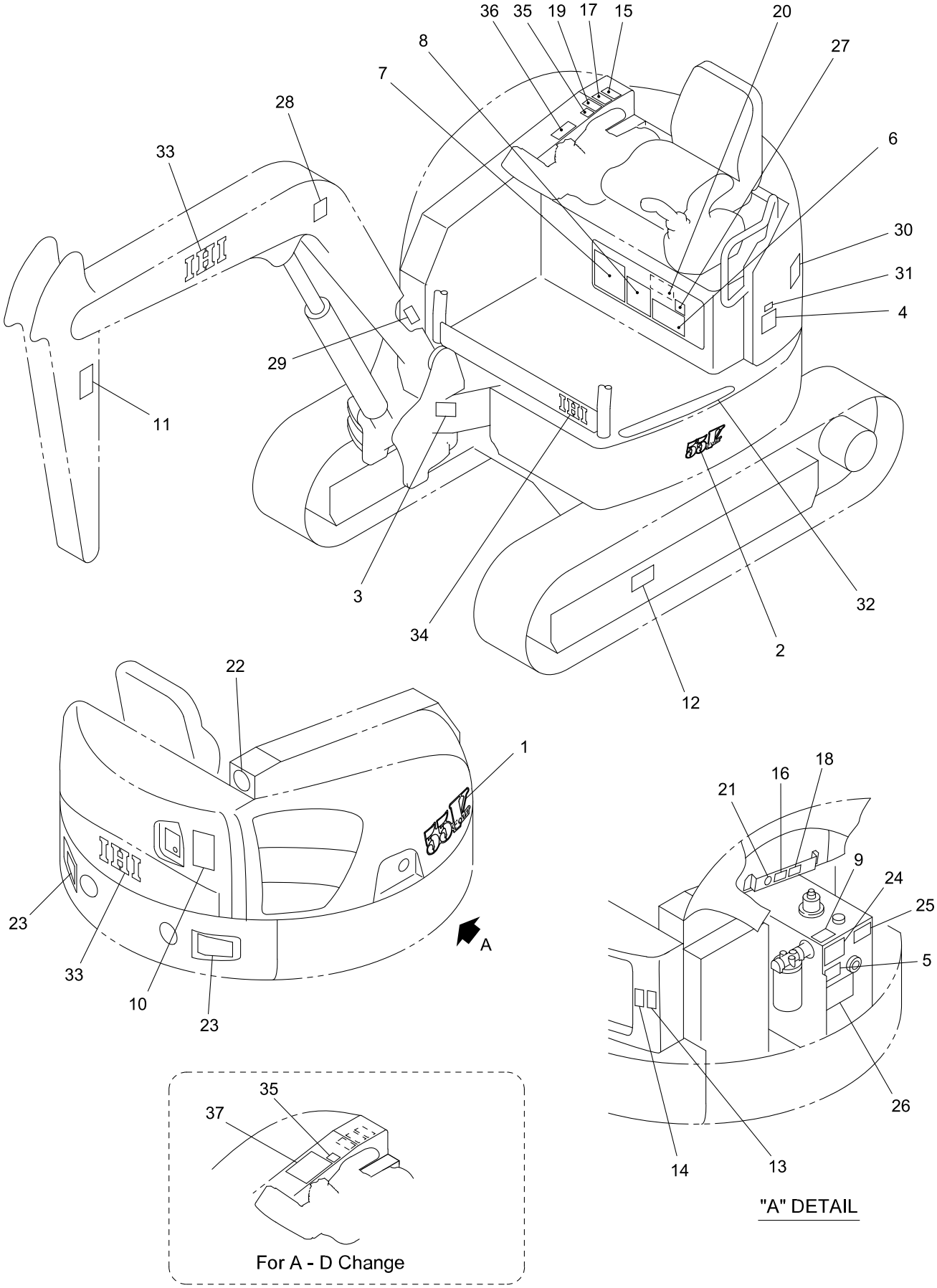

50V4-08070B-1

https://truckmanualshub.com/

KEY No.	SUP.	PART No.	DESCRIPTION	Q'TY	CHAN.	SERIAL No.	REMARKS
0	×	F377 850 00	Decal Ass'y	1		WY010001-	
0-1	×	F377 854 00	Decal Ass'y	1		WY010001-	
1		D408 412 00	* Decal (Model)	1		WY010001-	
2		D408 421 00	* Decal (Model)	1		WY010001-	
3	×	D405 091 00	* Decal (Serial No.)	1		WY010001-	
3-1		0497 035 00	* Screw, Drive	4		WY010001-	d=3
4		4407 974 00	* Decal (Oil)	1		WY010001-	
5		D406 554 00	* Decal (Oil Check)	1		WY010001-	
6		D408 356 00	* Decal (Lub. Chart)	1		WY010001-	
7		D408 327 00	* Decal (Engine Daily Check)	1		WY010001-	
8		4406 714 00	* Decal (Safety Works)	1		WY010001-	
9		D408 425 00	* Decal (Tank Decompression)	1		WY010001-	
10		D405 507 00	* Decal (Safety Swing)	1		WY010001-	
11		D405 511 00	* Decal (Caution)	2		WY010001-	
12		D405 505 00	* Decal (Caution)	2		WY010001-	
13		D405 366 00	* Decal (Caution)	1		WY010001-	
14		D405 509 00	* Decal (Caution)	1		WY010001-	
15		D405 359 00	* Decal (Caution)	1		WY010001-	
16		D405 503 00	* Decal (Caution)	1		WY010001-	
17		D405 508 00	* Decal (Caution)	1		WY010001-	
18		D405 504 00	* Decal (Caution)	1		WY010001-	
19		D405 506 00	* Decal (Caution)	1		WY010001-	
20		D405 575 00	* Decal (Caution)	1		WY010001-	
20-1		D408 436 00	* Decal (Capacities Table)	1		WY010001-	
21		4406 710 00	* Decal (Anti-Freezing Solution)	1		WY010001-	
22		D406 783 00	* Decal (Environment)	1		WY010001-	
23		D408 371 00	* Decal (Reflector)	2		WY010001-	
24		D408 334 00	* Decal (Boom Lowering)	1		WY010001-	
25		4448 687 00	* Decal (Spare Piping Change)	1		WY010001-	
26		4447 996 00	* Decal (Breaker Cation)	1		WY010001-	
27		4448 542 00	* Decal (Transport Fix)	1		WY010001-	
28		D408 348 00	* Decal (Lifting Procedures)	1		WY010001-	
29	×	D405 097 00	* Decal (New Machine)	1		WY010001-	
30		D406 032 00	* Decal (Noise 97)	1		WY010001-	
31		D407 943 00	* Decal (EPA Regulation)	1		WY010001-	
32		D408 370 00	* Plate, Nonslip	1		WY010001-	
33		D408 402 00	* Decal (IHI)	3		WY010001-	
34		D408 403 00	* Decal (IHI)	1		WY010001-	
35		D406 602 00	* Decal (Blade, Pedal)	1		WY010001-	
36		D406 603 00	* Decal (Control A)	1		WY010001-	
36-1		D406 604 00	* Decal (Control B)	1		WY010001-	
36-2		D406 605 00	* Decal (Control C)	1		WY010001-	
36-3		D406 606 00	* Decal (Control D)	1		WY010001-	
37		D406 609 00	* Decal (Control A-D)	1		WY010001-	

https://truckmanualshub.com/

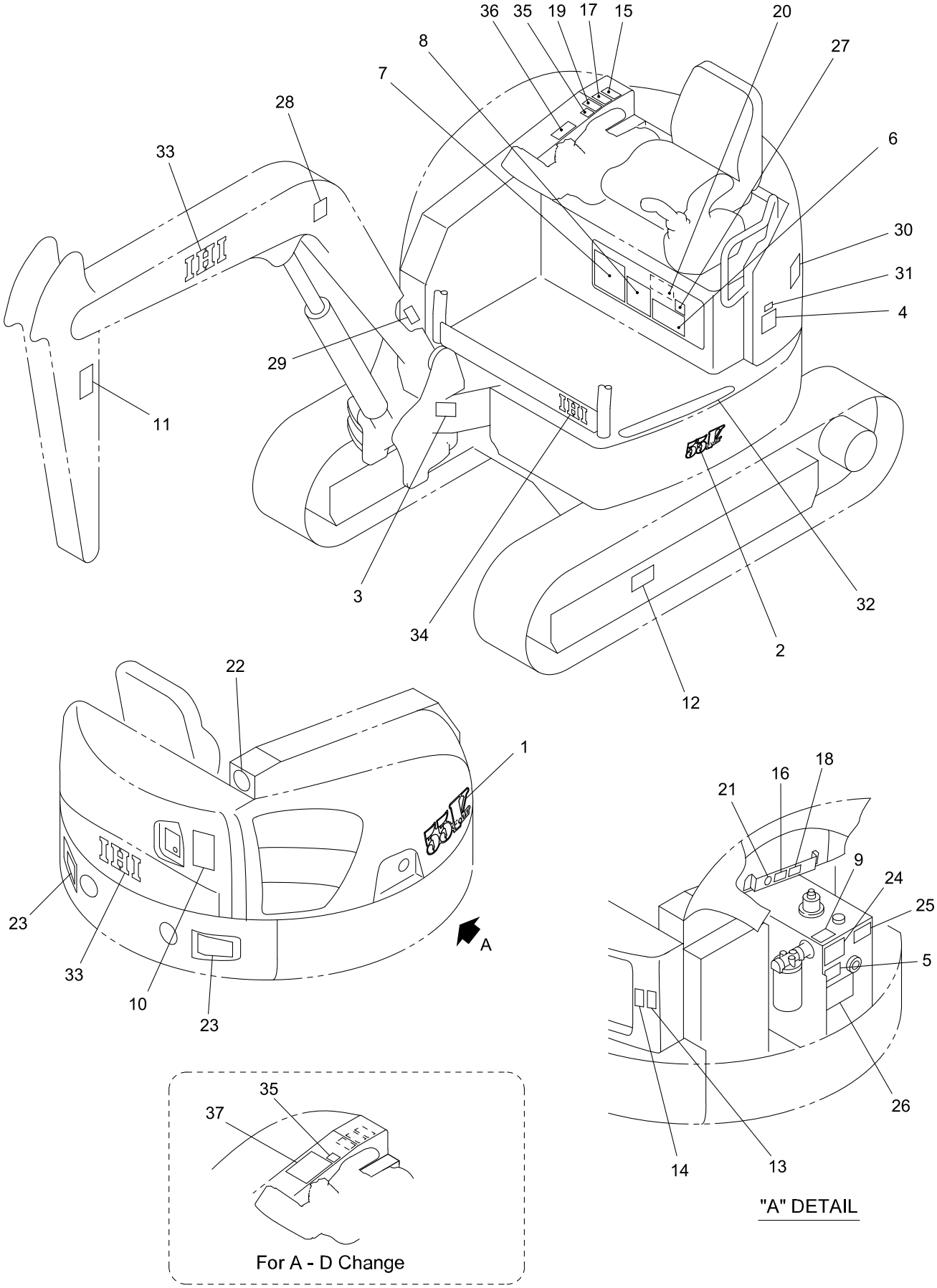

50V4-08070B-1

https://truckmanualshub.com/

KEY No.	SUP.	PART No.	DESCRIPTION	Q'TY	CHAN.	SERIAL No.	REMARKS
0	×	F377 850 00	Decal Ass'y	1		WY010001-	
0-1	×	F377 854 00	Decal Ass'y	1		WY010001-	
1		D408 412 00	* Decal (Model)	1		WY010001-	
2		D408 421 00	* Decal (Model)	1		WY010001-	
3	×	D405 091 00	* Decal (Serial No.)	1		WY010001-	
3-1		0497 035 00	* Screw, Drive	4		WY010001-	d=3
4		4405 457 00	* Decal (Oil)	1		WY010001-	
5		D406 550 00	* Decal (Oil Check)	1		WY010001-	
6		D408 357 00	* Decal (Lub. Chart)	1		WY010001-	
7		D408 329 00	* Decal (Engine Daily Check)	1		WY010001-	
8		4405 451 00	* Decal (Safety Works)	1		WY010001-	
9		D408 426 00	* Decal (Tank Decompression)	1		WY010001-	
10		D405 507 00	* Decal (Safety Swing)	1		WY010001-	
11		D405 511 00	* Decal (Caution)	2		WY010001-	
12		D405 505 00	* Decal (Caution)	2		WY010001-	
13		D405 366 00	* Decal (Caution)	1		WY010001-	
14		D405 509 00	* Decal (Caution)	1		WY010001-	
15		D405 359 00	* Decal (Caution)	1		WY010001-	
16		D405 503 00	* Decal (Caution)	1		WY010001-	
17		D405 508 00	* Decal (Caution)	1		WY010001-	
18		D405 504 00	* Decal (Caution)	1		WY010001-	
19		D405 506 00	* Decal (Caution)	1		WY010001-	
20		D405 571 00	* Decal (Caution)	1		WY010001-	
21		4405 456 00	* Decal (Anti-Freezing Solution)	1		WY010001-	
22		D406 783 00	* Decal (Environment)	1		WY010001-	
23		D408 371 00	* Decal (Reflector)	2		WY010001-	
24		D408 335 00	* Decal (Boom Lowering)	1		WY010001-	
25		4448 944 00	* Decal (Spare Piping Change)	1		WY010001-	
26		4447 925 00	* Decal (Breaker Cation)	1		WY010001-	
27		4448 511 00	* Decal (Transport Fix)	1		WY010001-	
28		D408 349 00	* Decal (Lifting Procedures)	1		WY010001-	
29	×	D405 097 00	* Decal (New Machine)	1		WY010001-	
30		D406 032 00	* Decal (Noise 97)	1		WY010001-	
31		D407 943 00	* Decal (EPA Regulation)	1		WY010001-	
32		D408 370 00	* Plate, Nonslip	1		WY010001-	
33		D408 402 00	* Decal (IHI)	3		WY010001-	
34		D408 403 00	* Decal (IHI)	1		WY010001-	
35		D406 602 00	* Decal (Blade, Pedal)	1		WY010001-	
36		D406 603 00	* Decal (Control A)	1		WY010001-	
36-1		D406 604 00	* Decal (Control B)	1		WY010001-	
36-2		D406 605 00	* Decal (Control C)	1		WY010001-	
36-3		D406 606 00	* Decal (Control D)	1		WY010001-	
37		D406 609 00	* Decal (Control A-D)	1		WY010001-	

https://truckmanualshub.com/

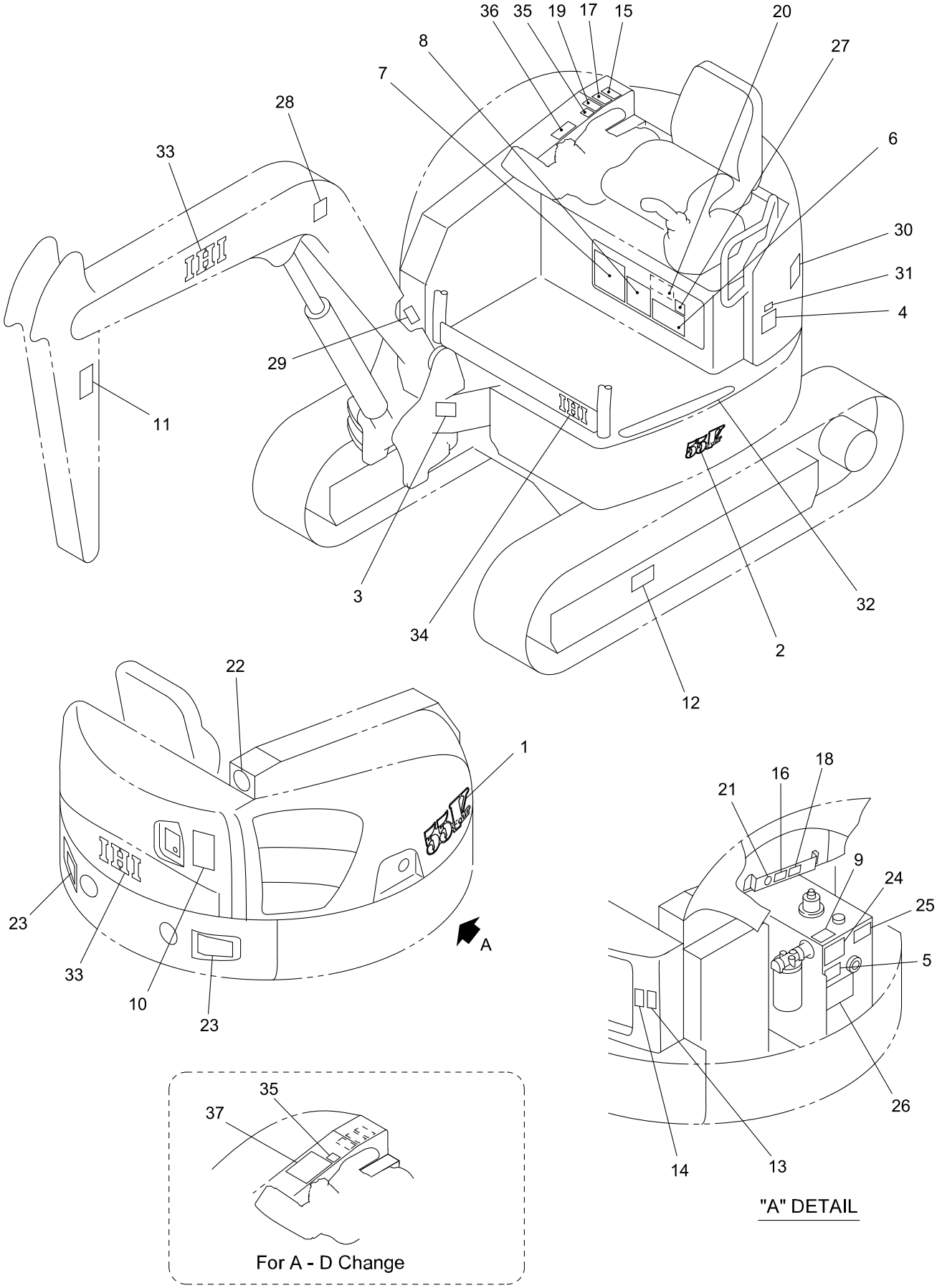

50V4-08070B-1

8

https://truckmanualshub.com/

KEY No.	SUP.	PART No.	DESCRIPTION	Q'TY	CHAN.	SERIAL No.	REMARKS
0	×	F377 850 00	Decal Ass'y	1		WY010001-	
0-1	×	F377 854 00	Decal Ass'y	1		WY010001-	
1		D408 412 00	* Decal (Model)	1		WY010001-	
2		D408 421 00	* Decal (Model)	1		WY010001-	
3	×	D405 091 00	* Decal (Serial No.)	1		WY010001-	
3-1		0497 035 00	* Screw, Drive	4		WY010001-	d=3
4		4405 457 00	* Decal (Oil)	1		WY010001-	
5		D406 565 00	* Decal (Oil Check)	1		WY010001-	
6		D408 358 00	* Decal (Lub. Chart)	1		WY010001-	
7		D408 330 00	* Decal (Engine Daily Check)	1		WY010001-	
8		D407 017 00	* Decal (Safety Works)	1		WY010001-	
9		D408 427 00	* Decal (Tank Decompression)	1		WY010001-	
10		D405 507 00	* Decal (Safety Swing)	1		WY010001-	
11		D405 511 00	* Decal (Caution)	2		WY010001-	
12		D405 505 00	* Decal (Caution)	2		WY010001-	
13		D405 366 00	* Decal (Caution)	1		WY010001-	
14		D405 509 00	* Decal (Caution)	1		WY010001-	
15		D405 359 00	* Decal (Caution)	1		WY010001-	
16		D405 503 00	* Decal (Caution)	1		WY010001-	
17		D405 508 00	* Decal (Caution)	1		WY010001-	
18		D405 504 00	* Decal (Caution)	1		WY010001-	
19		D405 506 00	* Decal (Caution)	1		WY010001-	
20		D405 587 00	* Decal (Caution)	1		WY010001-	
21		4447 229 00	* Decal (Anti-Freezing Solution)	1		WY010001-	
22		D406 783 00	* Decal (Environment)	1		WY010001-	
23		D408 371 00	* Decal (Reflector)	2		WY010001-	
24		D408 336 00	* Decal (Boom Lowering)	1		WY010001-	
25		D405 256 00	* Decal (Spare Piping Change)	1		WY010001-	
26		4448 350 00	* Decal (Breaker Cation)	1		WY010001-	
27		D405 059 00	* Decal (Transport Fix)	1		WY010001-	
28		D408 350 00	* Decal (Lifting Procedures)	1		WY010001-	
29	×	D405 097 00	* Decal (New Machine)	1		WY010001-	
30		D406 032 00	* Decal (Noise 97)	1		WY010001-	
31		D407 943 00	* Decal (EPA Regulation)	1		WY010001-	
32		D408 370 00	* Plate, Nonslip	1		WY010001-	
33		D408 402 00	* Decal (IHI)	3		WY010001-	
34		D408 403 00	* Decal (IHI)	1		WY010001-	
35		D406 602 00	* Decal (Blade, Pedal)	1		WY010001-	
36		D406 603 00	* Decal (Control A)	1		WY010001-	
36-1		D406 604 00	* Decal (Control B)	1		WY010001-	
36-2		D406 605 00	* Decal (Control C)	1		WY010001-	
36-3		D406 606 00	* Decal (Control D)	1		WY010001-	
37		D406 609 00	* Decal (Control A-D)	1		WY010001-	

https://truckmanualshub.com/

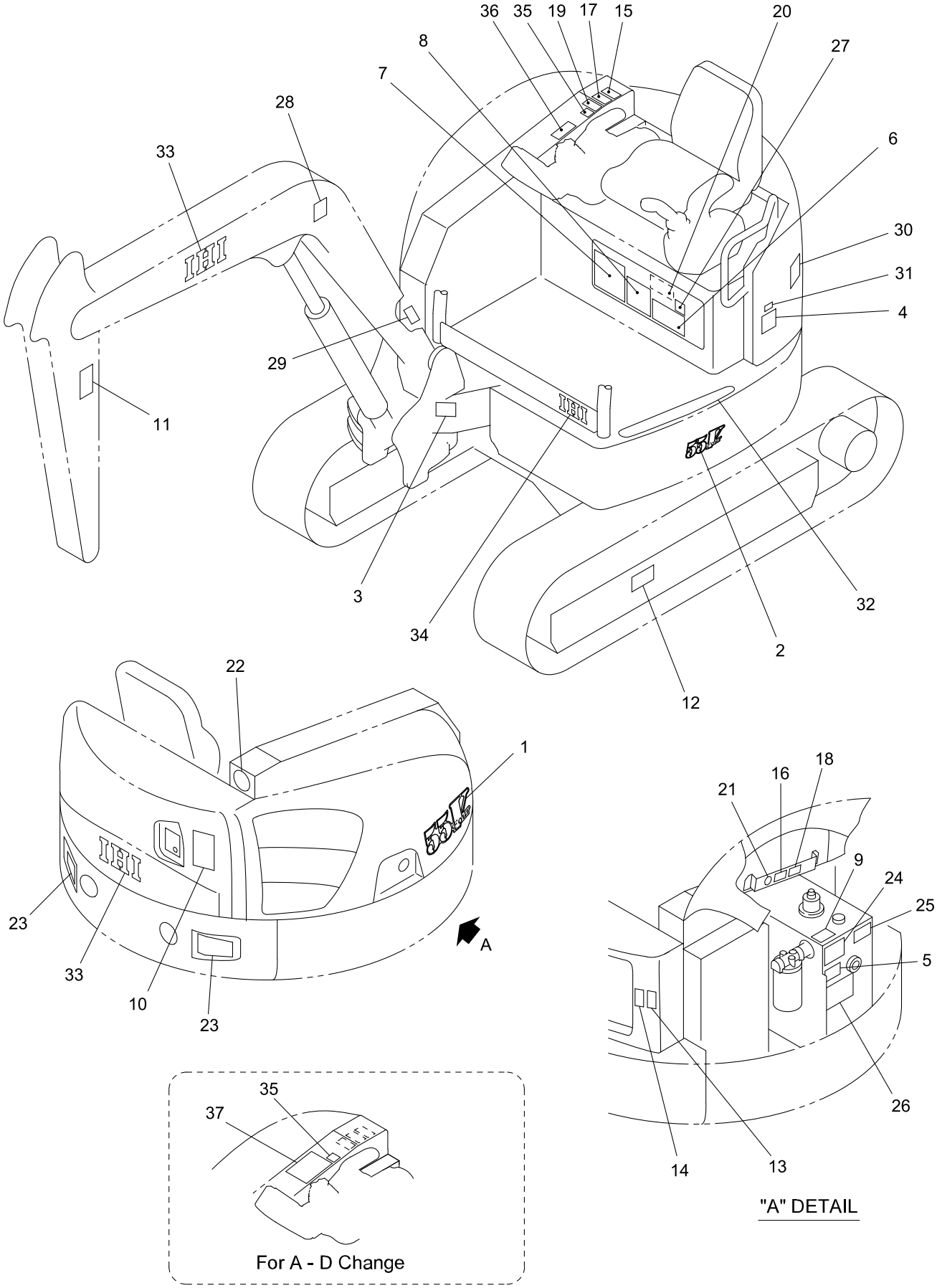

50V4-08070B-1

https://truckmanualshub.com/

KEY No.	SUP.	PART No.	DESCRIPTION	Q'TY	CHAN.	SERIAL No.	REMARKS
0	×	F377 850 00	Decal Ass'y	1		WY010001-	
0-1	×	F377 854 00	Decal Ass'y	1		WY010001-	
1		D408 412 00	* Decal (Model)	1		WY010001-	
2		D408 421 00	* Decal (Model)	1		WY010001-	
3	×	D405 091 00	* Decal (Serial No.)	1		WY010001-	
3-1		0497 035 00	* Screw, Drive	4		WY010001-	d=3
4		4405 457 00	* Decal (Oil)	1		WY010001-	
5		D406 562 00	* Decal (Oil Check)	1		WY010001-	
6		D408 359 00	* Decal (Lub. Chart)	1		WY010001-	
7		D408 331 00	* Decal (Engine Daily Check)	1		WY010001-	
8		4448 603 00	* Decal (Safety Works)	1		WY010001-	
9		D408 428 00	* Decal (Tank Decompression)	1		WY010001-	
10		D405 507 00	* Decal (Safety Swing)	1		WY010001-	
11		D405 511 00	* Decal (Caution)	2		WY010001-	
12		D405 505 00	* Decal (Caution)	2		WY010001-	
13		D405 366 00	* Decal (Caution)	1		WY010001-	
14		D405 509 00	* Decal (Caution)	1		WY010001-	
15		D405 359 00	* Decal (Caution)	1		WY010001-	
16		D405 503 00	* Decal (Caution)	1		WY010001-	
17		D405 508 00	* Decal (Caution)	1		WY010001-	
18		D405 504 00	* Decal (Caution)	1		WY010001-	
19		D405 506 00	* Decal (Caution)	1		WY010001-	
20		D405 594 00	* Decal (Caution)	1		WY010001-	
21		4448 598 00	* Decal (Anti-Freezing Solution)	1		WY010001-	
22		D406 783 00	* Decal (Environment)	1		WY010001-	
23		D408 371 00	* Decal (Reflector)	2		WY010001-	
24		D408 337 00	* Decal (Boom Lowering)	1		WY010001-	
25		4449 406 00	* Decal (Spare Piping Change)	1		WY010001-	
26		4448 607 00	* Decal (Breaker Cation)	1		WY010001-	
27		4448 619 00	* Decal (Transport Fix)	1		WY010001-	
28		D408 351 00	* Decal (Lifting Procedures)	1		WY010001-	
29	×	D405 097 00	* Decal (New Machine)	1		WY010001-	
30		D406 032 00	* Decal (Noise 97)	1		WY010001-	
31		D407 943 00	* Decal (EPA Regulation)	1		WY010001-	
32		D408 370 00	* Plate, Nonslip	1		WY010001-	
33		D408 402 00	* Decal (IHI)	3		WY010001-	
34		D408 403 00	* Decal (IHI)	1		WY010001-	
35		D406 602 00	* Decal (Blade, Pedal)	1		WY010001-	
36		D406 603 00	* Decal (Control A)	1		WY010001-	
36-1		D406 604 00	* Decal (Control B)	1		WY010001-	
36-2		D406 605 00	* Decal (Control C)	1		WY010001-	
36-3		D406 606 00	* Decal (Control D)	1		WY010001-	
37		D406 609 00	* Decal (Control A-D)	1		WY010001-	

https://truckmanualshub.com/

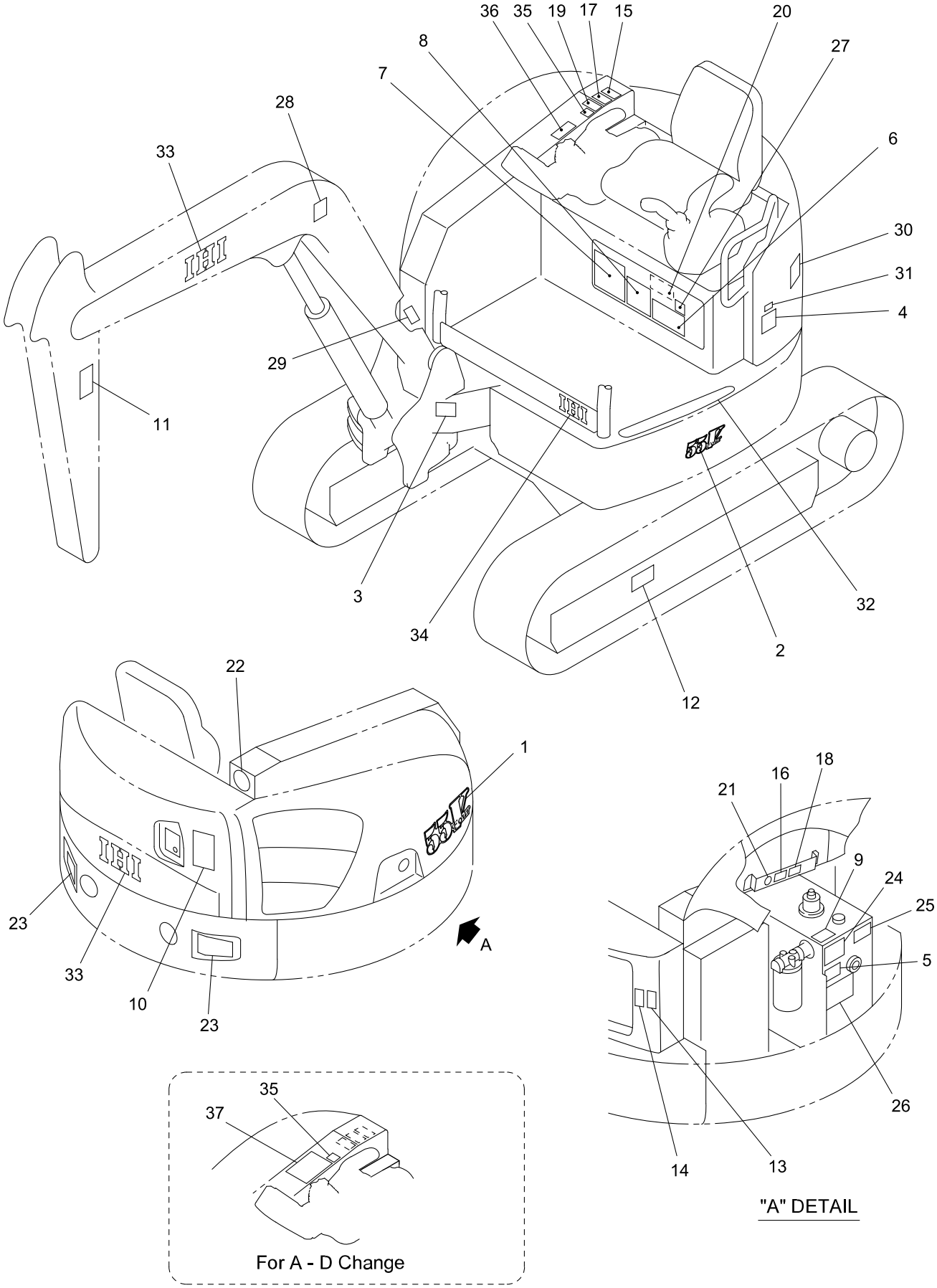

50V4-08070B-1

8

IHI

NAME PLATE ASS'Y (FOR SPANISH)

MODEL 55V4

SHEET No 8-7[G]

https://truckmanualshub.com/

KEY No.	SUP.	PART No.	DESCRIPTION	Q'TY	CHAN.	SERIAL No.	REMARKS
0	×	F377 850 00	Decal Ass'y	1		WY010001-	
0-1	×	F377 854 00	Decal Ass'y	1		WY010001-	
1		D408 412 00	* Decal (Model)	1		WY010001-	
2		D408 421 00	* Decal (Model)	1		WY010001-	
3	×	D405 091 00	* Decal (Serial No.)	1		WY010001-	
3-1		0497 035 00	* Screw, Drive	4		WY010001-	d=3
4		D406 000 00	* Decal (Oil)	1		WY010001-	
5		D406 811 00	* Decal (Oil Check)	1		WY010001-	
6		D408 361 00	* Decal (Lub. Chart)	1		WY010001-	
7		D408 333 00	* Decal (Engine Daily Check)	1		WY010001-	
8		D407 016 00	* Decal (Safety Works)	1		WY010001-	
9		D408 430 00	* Decal (Tank Decompression)	1		WY010001-	
10		D405 507 00	* Decal (Safety Swing)	1		WY010001-	
11		D405 511 00	* Decal (Caution)	2		WY010001-	
12		D405 505 00	* Decal (Caution)	2		WY010001-	
13		D405 366 00	* Decal (Caution)	1		WY010001-	
14		D405 509 00	* Decal (Caution)	1		WY010001-	
15		D405 359 00	* Decal (Caution)	1		WY010001-	
16		D405 503 00	* Decal (Caution)	1		WY010001-	
17		D405 508 00	* Decal (Caution)	1		WY010001-	
18		D405 504 00	* Decal (Caution)	1		WY010001-	
19		D405 506 00	* Decal (Caution)	1		WY010001-	
20		D406 005 00	* Decal (Caution)	1		WY010001-	
21		D406 012 00	* Decal (Anti-Freezing Solution)	1		WY010001-	
22		D406 783 00	* Decal (Environment)	1		WY010001-	
23		D408 371 00	* Decal (Reflector)	2		WY010001-	
24		D408 339 00	* Decal (Boom Lowering)	1		WY010001-	
25		D406 720 00	* Decal (Spare Piping Change)	1		WY010001-	
26		D406 002 00	* Decal (Breaker Cation)	1		WY010001-	
27		D406 007 00	* Decal (Transport Fix)	1		WY010001-	
28		D408 353 00	* Decal (Lifting Procedures)	1		WY010001-	
29	×	D405 097 00	* Decal (New Machine)	1		WY010001-	
30		D406 032 00	* Decal (Noise 97)	1		WY010001-	
31		D407 943 00	* Decal (EPA Regulation)	1		WY010001-	
32		D408 370 00	* Plate, Nonslip	1		WY010001-	
33		D408 402 00	* Decal (IHI)	3		WY010001-	
34		D408 403 00	* Decal (IHI)	1		WY010001-	
35		D406 602 00	* Decal (Blade, Pedal)	1		WY010001-	
36		D406 603 00	* Decal (Control A)	1		WY010001-	
36-1		D406 604 00	* Decal (Control B)	1		WY010001-	
36-2		D406 605 00	* Decal (Control C)	1		WY010001-	
36-3		D406 606 00	* Decal (Control D)	1		WY010001-	
37		D406 609 00	* Decal (Control A-D)	1		WY010001-	

https://truckmanualshub.com/

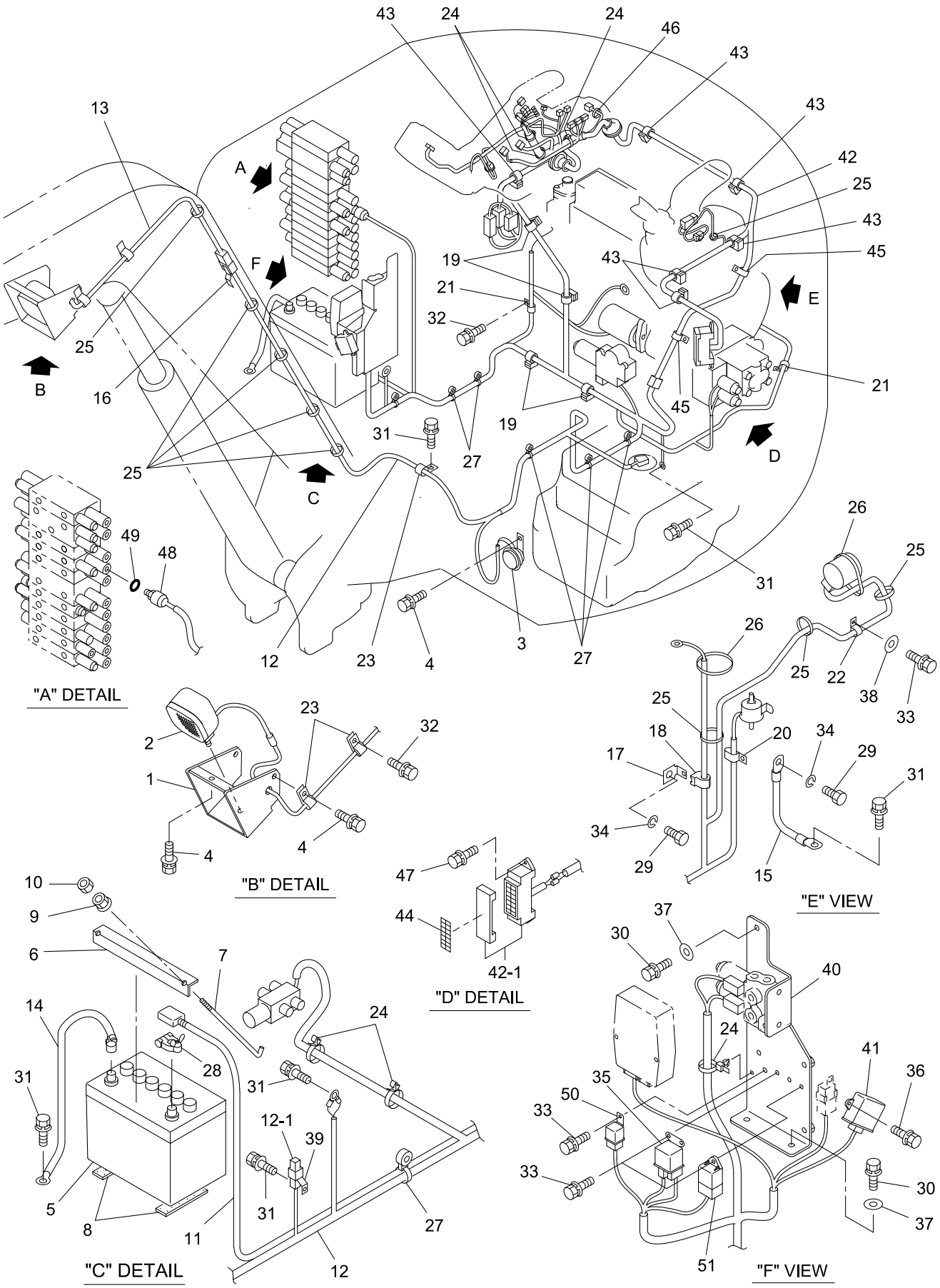

40V4-090100-1

https://truckmanualshub.com/

KEY No.	SUP.	PART No.	DESCRIPTION	Q'TY	CHAN.	SERIAL No.	REMARKS
0	×	F366 889 00	Electrical System	1		WY010001-	
0-1	×	F355 102 00	Accessories Ass'y	1		WY010001-	
0-2	×	F366 821 00	Battery Ass'y	1		WY010001-	
1		D458 269 00	* Cover	1		WY010001-	
2		0854 529 UA	* Light Ass'y	1		WY010001-	
2-1		0854 529 05	** Bulb	1		WY010001-	
2-2		0854 529 01	** Lens	1		WY010001-	
2-3		0552 080 20	** Bolt, Hex.	1		WY010001-	M8X20
2-4		0521 080 00	** Nut, Hex.(W/F.W)	1		WY010001-	M8
3		0861 001 02	* Horn	1		WY010001-	
4		0517 080 16	* Bolt, Treatment (W/L.W, F.W)	4		WY010001-	M8X16
5		0851 000 01	* Battery	1		WY010001-	
5-1		0851 000 02	* Battery (For Cold District)	1		WY010001-	
6		4416 063 01	* Bracket	1		WY010001-	
7		4004 022 04	* Bolt, Hook	2		WY010001-	M6X280
8		4409 625 11	* Plate, Rubber	2		WY010001-	
9		0521 060 00	* Nut, Hex. (W/F.W)	2		WY010001-	M6
10		0544 060 00	* Nut, Hex.	2		WY010001-	M6
11		4591 982 18	* Cable, Battery	1		WY010001-	
12		D592 288 00	* Harness, Main	1		WY010001-	
12-1		0830 291 01	** Link, Fusible	1		WY010001-	65A
13		0879 551 30	* Harness	1		WY010001-	
14		D592 194 02	* Cable, Battery	1		WY010001-	
15		D592 195 03	* Band, Earth	1		WY010001-	
16		0690 081 92	* Clamp	1		WY010001-	
17		D417 041 00	* Bracket	1		WY010001-	
18		0690 082 01	* Clamp	1		WY010001-	
19		0690 082 05	* Clamp, Hose	4		WY010001-	
20		4080 000 06	* Clamp, Hose	1		WY010001-	
21		4080 000 04	* Clamp, Hose	2		WY010001-	
22		4080 000 03	* Clamp, Hose	1		WY010001-	
23		4080 000 02	* Clamp, Hose	3		WY010001-	
24		0690 082 08	* Clamp, Hose	7		WY010001-	
25		0820 067 03	* Band, Cable	9		WY010001-	
26		0820 067 05	* Band, Cable	2		WY010001-	
27		0820 067 31	* Band, Cable	6		WY010001-	
28		0852 119 22	* Terminal	1		WY010001-	
29		0541 120 16	* Bolt, Hex.	2		WY010001-	M12X16 P=1.25
30		0518 100 25	* Bolt, Treatment (W/L.W, F.W)	3		WY010001-	M10X25 P=1.25
31		0518 100 16	* Bolt, Treatment (W/L.W, F.W)	6		WY010001-	M10X16 P=1.25
32		0517 080 12	* Bolt, Treatment (W/L.W, F.W)	2		WY010001-	M8X12
33		0517 060 16	* Bolt, Treatment (W/L.W, F.W)	5		WY010001-	M6X16
34		0590 120 00	* Washer, Lock	2		WY010001-	M12
35		0820 215 11	* Relay, Glow	1		WY010001-	
36		0517 060 20	* Bolt, Treatment (W/L.W, F.W)	2		WY010001-	M6X20
37		4006 119 02	* Washer, Flat	3		WY010001-	M10
38		0593 080 00	* Washer, Flat	1		WY010001-	M8
39		0690 081 89	* Clip	1		WY010001-	
40		D419 313 00	* Bracket	1		WY010001-	
41		0820 215 10	* Relay, Flip-Flop	1		WY010001-	
42		D592 285 00	* Harness	1		WY010001-	
42-1		0858 140 01	** Box, Fuse	1		WY010001-	

https://truckmanualshub.com/

KEY No.	SUP.	PART No.	DESCRIPTION	Q'TY	CHAN.	SERIAL No.	REMARKS
42-2		0830 107 11	** Fuse	1		WY010001-	2A
42-3		0830 107 12	** Fuse	1		WY010001-	5A
42-4		0830 107 06	** Fuse	8		WY010001-	10A
42-5		0830 107 07	** Fuse	1		WY010001-	15A
42-6		0830 107 08	** Fuse	2		WY010001-	20A
42-7		0830 107 09	** Fuse	1		WY010001-	25A
42-8		0830 107 10	** Fuse	2		WY010001-	30A
43		0690 082 05	* Clamp, Hose	6		WY010001-	
44		D408 292 00	* Decal	1		WY010001-	
45		4080 000 05	* Clamp, Hose	2		WY010001-	
46		0820 067 04	* Band, Cable	1		WY010001-	
47		0517 060 20	* Bolt, Treatment (W/L.W, F.W)	2		WY010001-	M6X20
48		0858 501 16	* Switch, Oil Pressure	1		WY010001-	
49		0760 710 12	* Ring, O	1		WY010001-	P11-90B
50		K1K574 60221	* Relay, Starter	1		WY010001-	
51		K15694 65992	* Relay, Timer	1		WY010001-	

9

https://truckmanualshub.com/

[Memo]

https://truckmanualshub.com/

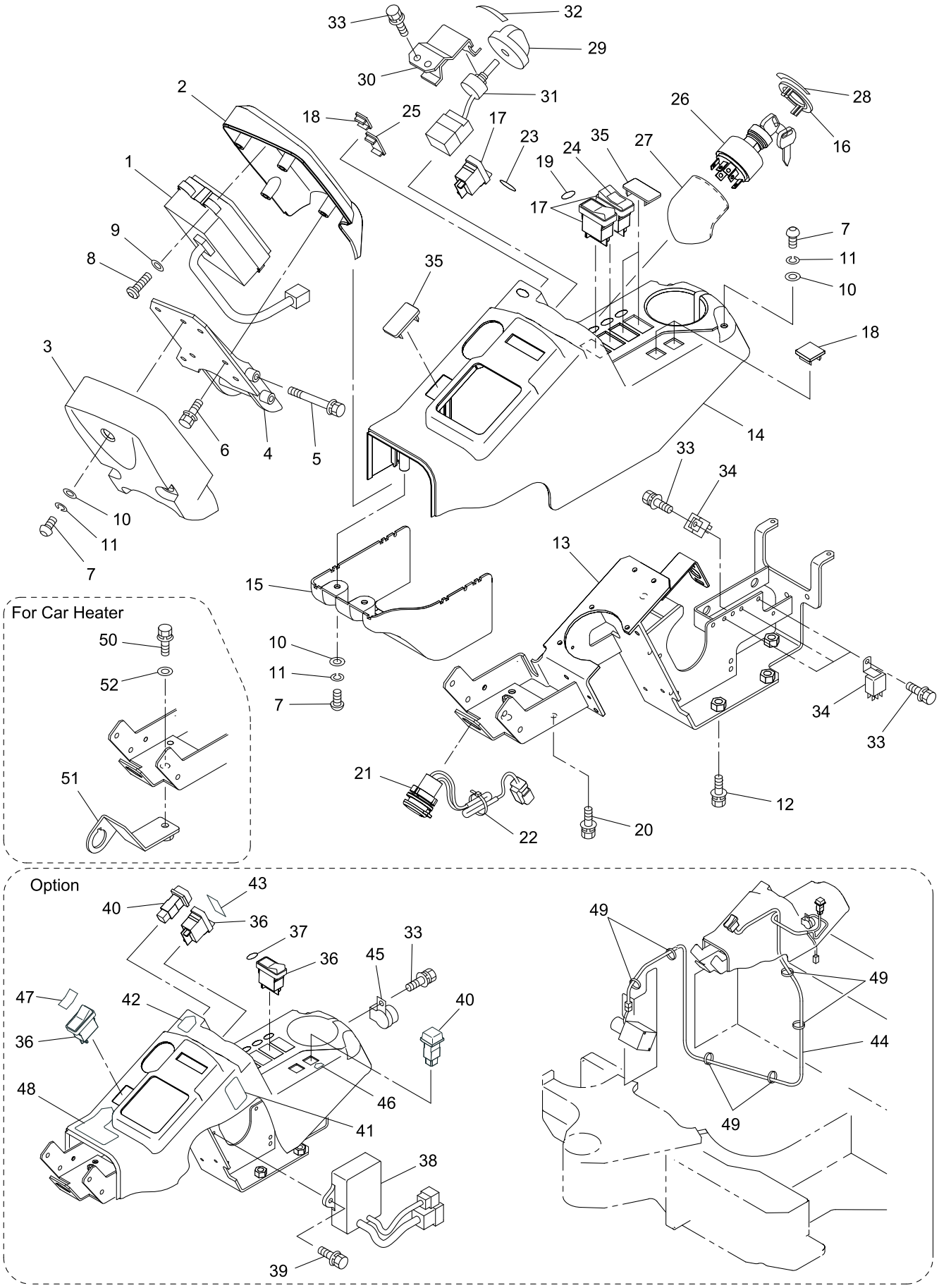

40V4-090200-1

https://truckmanualshub.com/

KEY No.	SUP.	PART No.	DESCRIPTION	Q'TY	CHAN.	SERIAL No.	REMARKS
0	×	F361 706 00	Panel Ass'y, Instrument	1		WY010001-	
0-1	×	F361 707 00	Panel Ass'y, Instrument	1		WY010001-	
1		0881 509 UA	* Monitor, OK	1		WY010001-	
2		D465 380 00	* Panel	1		WY010001-	
3		D465 381 00	* Panel	1		WY010001-	
4		D419 580 00	* Bracket	1		WY010001-	
5		0517 081 15	* Bolt, Treatment (W/L.W, F.W)	2		WY010001-	M8X115
6		0517 060 20	* Bolt, Treatment (W/L.W, F.W)	4		WY010001-	M6X20
7		4004 364 01	* Bolt, Button Head	7		WY010001-	M6X18
8		0454 400 20	* Screw, Tapping	4		WY010001-	M4X20
9		0593 040 00	* Washer, Flat	4		WY010001-	M4
10		0594 060 00	* Washer, Flat	7		WY010001-	M6
11		0596 060 00	* Washer, Lock	7		WY010001-	M6
12		0518 100 25	* Bolt, Treatment (W/L.W, F.W)	4		WY010001-	M10X25 P=1.25
13		D419 229 00	* Bracket	1		WY010001-	
14		D465 313 00	* Panel	1		WY010001-	
15		D465 314 00	* Panel	1		WY010001-	
16		0690 203 44	* Cover	1		WY010001-	
17		0858 314 33	* Switch Assy	3		WY010001-	
18		D528 006 00	* Cap	AR		WY010001-	
19		D407 819 00	* Decal (Light)	1		WY010001-	
20		0517 060 16	* Bolt, Treatment (W/L.W, F.W)	2		WY010001-	M6X16
21		0830 406 02	* Socket	1		WY010001-	
22		0820 067 05	* Band, Cable	1		WY010001-	
23		D408 280 00	* Decal	1		WY010001-	
24		D408 447 00	* Decal	1		WY010001-	
25		D528 005 00	* Cap	1		WY010001-	
26		0858 306 03	* Switch Assy Starter	1		WY010001-	
26-1		0858 306 04	* Switch Assy Starter	1		WY010001-	Option 5080
26-2		0690 270 29	** Key	2		WY010001-	#5080
27		4457 535 00	* Cover (Starter Switch)	1		WY010001-	
28		D407 823 00	* Decal	1		WY010001-	
29		0690 211 05	* Throttle, Dial	1		WY010001-	
30		D418 304 00	* Bracket	1		WY010001-	
31		0858 614 05	* Meter, Potention	1		WY010001-	
32		D407 829 00	* Decal (Throttle)	1		WY010001-	
33		0517 060 12	* Bolt, Treatment (W/L.W, F.W)	7		WY010001-	M6X12
34		0820 215 07	* Relay	4		WY010001-	
35		D528 005 00	* Cap	AR		WY010001-	
36		0858 314 33	* Switch Assy	AR		WY010001-	
37		D407 965 00	* Decal	1		WY010001-	
38		0893 509 UA	* Controller Ass'y	1		WY010001-	
39		0517 060 20	* Bolt, Treatment (W/L.W, F.W)	2		WY010001-	M6X20
40		0858 314 35	* Switch Assy	AR		WY010001-	
41		D408 285 00	* Decal	1		WY010001-	
42		D407 963 00	* Decal	1		WY010001-	
43		D407 964 00	* Decal	1		WY010001-	
44		D592 206 00	* Harness	1		WY010001-	
45		0857 011 57	* Buzzer	1		WY010001-	
46		D407 966 00	* Decal	1		WY010001-	
47		D407 967 00	* Decal	1		WY010001-	
48		D407 968 00	* Decal	1		WY010001-	

https://truckmanualshub.com/

KEY No.	SUP.	PART No.	DESCRIPTION	Q'TY	CHAN.	SERIAL No.	REMARKS
49		0820 067 09	* Band, Cable	6		WY010001-	
50		0518 100 20	* Bolt, Treatment (W/L.W, F.W)	1		WY010001-	M10X20 P=1.25
51		D419 477 00	* Bracket	1		WY010001-	
52		4006 119 02	* Washer	1		WY010001-	M10

9

https://truckmanualshub.com/

[Memo]

https://truckmanualshub.com/

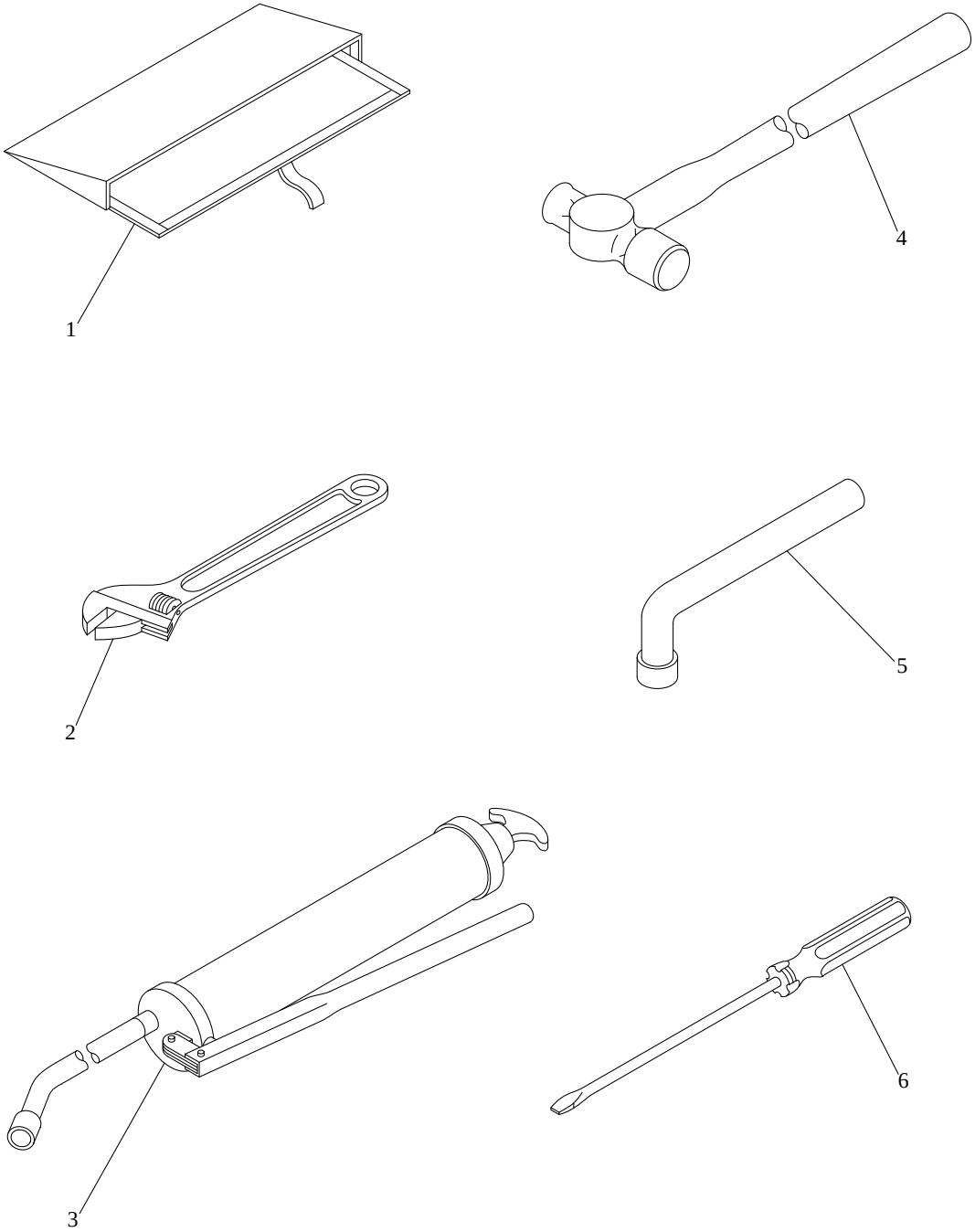

SHALL-100100-1

https://truckmanualshub.com/

KEY No.	SUP.	PART No.	DESCRIPTION	Q'TY	CHAN.	SERIAL No.	REMARKS
0	×	5388 510 00	Tools Set	1		WY010001-	
1		4450 505 00	* Case, Tools	1		WY010001-	
2	△	0931 109 25	* Wrench, Adjustable	1		WY010001-	250mm
3		0931 370 11	* Gun, Grease	1		WY010001-	
3-1		0931 370 10	* Gun, Grease	1		WY010001-	For Export
3-2	☆	0931 371 01	** Hose, Grease	1		WY010001-	48190-20540
4	△	0931 331 10	* Hammer	1		WY010001-	
5	△	0931 070 24	* Wrench, L	1		WY010001-	24mm
6	△	0931 301 04	* Driver (-)	1		WY010001-	100mm

10

https://truckmanualshub.com/

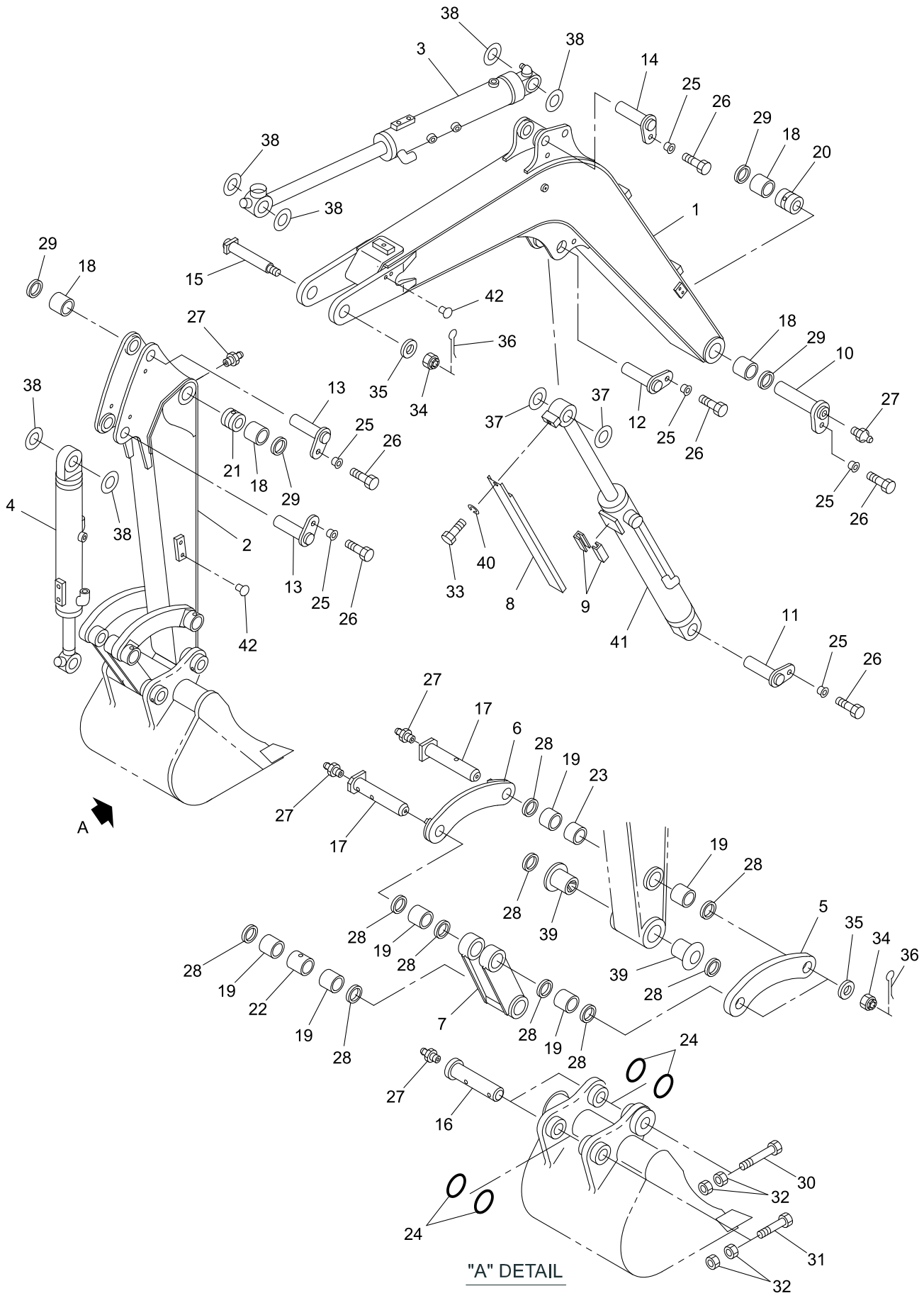

50V4-110100-1

https://truckmanualshub.com/

KEY No.	SUP.	PART No.	DESCRIPTION	Q'TY	CHAN.	SERIAL No.	REMARKS
0	×	F388 386 00	Attachment Ass'y, Hoe	1		WY010001-	
1		D210 131 00	* Boom	1		WY010001-	
2		D215 225 00	* Arm Ass'y	1		WY010001-	
2-1		D215 235 00	* Arm Ass'y, Long	1		WY010001-	
3	#	0782 606 UA	* Cylinder Ass'y, Arm	1		WY010001-	Sh. No. 5-9
4	#	0782 602 UA	* Cylinder Ass'y, Bucket	1		WY010001-	Sh. No. 5-10
5		D490 186 00	* Link, Arm (L.H.)	1		WY010001-	
6		D490 374 00	* Link, Arm (R.H.)	1		WY010001-	
7		D490 373 00	* Link, Bucket	1		WY010001-	
8		D458 441 00	* Cover	1		WY010001-	
9		D475 052 00	* Guide	2		WY010001-	
10		D017 249 00	* Pin, Head	1		WY010001-	
11		D017 234 04	* Pin, Head	1		WY010001-	
12		D017 234 02	* Pin, Head	1		WY010001-	
13		D017 237 01	* Pin, Head	2		WY010001-	
14		D017 237 02	* Pin, Head	1		WY010001-	
15		D013 398 01	* Pin, Head	1		WY010001-	
16		D013 408 00	* Pin, Head	2		WY010001-	
17		D013 409 00	* Pin, Head	2		WY010001-	
18		4043 229 07	* Bushing	4		WY010001-	
19		4043 231 12	* Bushing	6		WY010001-	
20		4040 468 21	* Spacer	1		WY010001-	
21		D040 192 04	* Spacer	1		WY010001-	
22		4040 468 16	* Spacer	1		WY010001-	
23		4040 468 02	* Spacer	1		WY010001-	
24		4511 501 01	* Ring, O	4		WY010001-	
25		D047 058 00	* Bushing	6		WY010001-	
26		0555 160 30	* Bolt, Treatment	6		WY010001-	M16X30
27		0728 111 15	* Nipple, Grease	6		WY010001-	PT1/8
28		0765 033 27	* Seal, Dust	10		WY010001-	
29		0765 033 28	* Seal, Dust	4		WY010001-	
30		0514 121 20	* Bolt, Treatment	1		WY010001-	M12X120 P=1.25
31		0514 120 90	* Bolt, Treatment	1		WY010001-	M12X90 P=1.25
32		0535 120 00	* Nut, Treatment	4		WY010001-	M12 P=1.25
33		0555 120 20	* Bolt, Treatment	1		WY010001-	M12X20
34		0587 360 00	* Nut, Castle	3		WY010001-	M36
35		4006 178 00	* Washer, Flat	3		WY010001-	
36		0599 060 70	* Pin, Cotter	3		WY010001-	d=6.0X70
37		4006 540 66	* Shim	AR		WY010001-	d=50, t=1.0
37-1		4006 540 67	* Shim	AR		WY010001-	d=50, t=2.0
38		4006 540 56	* Shim	AR		WY010001-	d=45, t=1.0
38-1		4006 540 57	* Shim	AR		WY010001-	d=45, t=2.0
39		D043 110 00	* Bushing	2		WY010001-	
40		0590 120 00	* Washer, Lock	1		WY010001-	M12
41	#	0782 604 UA	* Cylinder Ass'y, Boom	1		WY010001-	Sh. No. 5-8
42		0910 911 00	* Plug	8		WY010001-	

https://truckmanualshub.com/

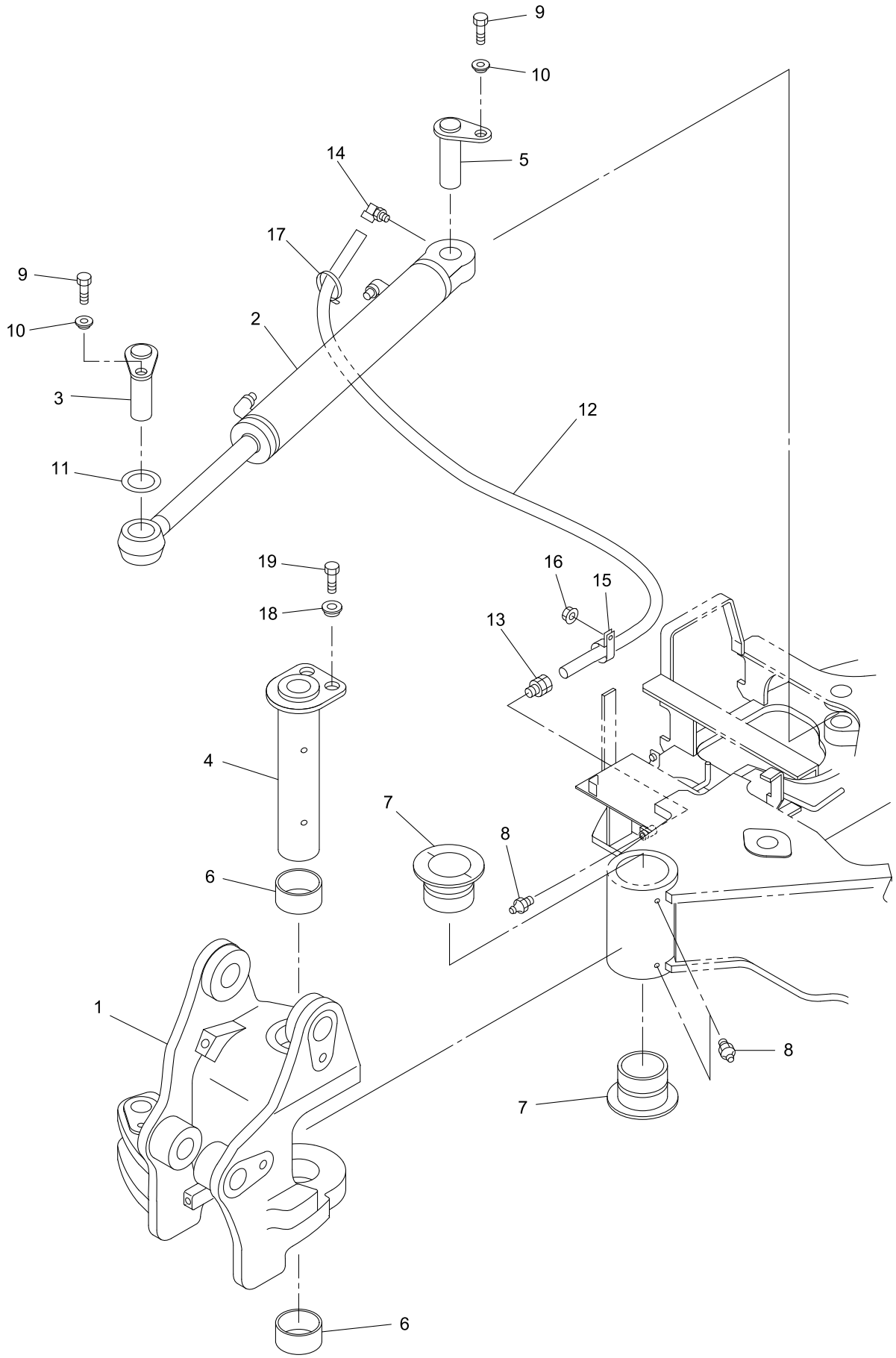

40V4-110200-1

https://truckmanualshub.com/

KEY No.	SUP.	PART No.	DESCRIPTION	Q'TY	CHAN.	SERIAL No.	REMARKS
0	×	F388 388 00	Swing Ass'y, Boom	1		WY010001-	
1		D418 721 00	* Bracket, Boom Swing	1		WY010001-	
2	#	0782 603 UA	* Cylinder Ass'y, Boom Swing	1		WY010001-	Sh. No. 5-11
3		D017 234 03	* Pin	1		WY010001-	
4		D017 259 00	* Pin	1		WY010001-	
5		D017 234 05	* Pin	1		WY010001-	
6		D043 030 00	* Bushing	2		WY010001-	
7		D043 115 00	* Bushing	2		WY010001-	
8		0728 111 15	* Nipple, Grease	3		WY010001-	PT1/8
9		0555 160 30	* Bolt, Treatment	2		WY010001-	M16X30
10		D047 058 00	* Bushing	2		WY010001-	
11		4006 540 66	* Shim	AR		WY010001-	d=50, t=1.0
11-1		4006 540 67	* Shim	AR		WY010001-	d=50, t=2.0
12		0779 000 88	* Tube, Synflex	M		WY010001-	L=1000
13		0710 106 27	* Connector	1		WY010001-	
13-1		0713 100 02	** Sleeve	1		WY010001-	
14		0710 107 27	* Elbow	1		WY010001-	
14-1		0713 100 02	** Sleeve	1		WY010001-	
15		4080 000 02	* Clamp, Hose	1		WY010001-	
16		0524 100 00	* Nut, Hex. (W/F.W)	1		WY010001-	M10 P=1.25
17		0820 067 05	* Band, Cable	1		WY010001-	
18		D047 003 00	* Bushing	2		WY010001-	
19		0555 160 35	* Bolt, Treatment	2		WY010001-	M16X35

https://truckmanualshub.com/

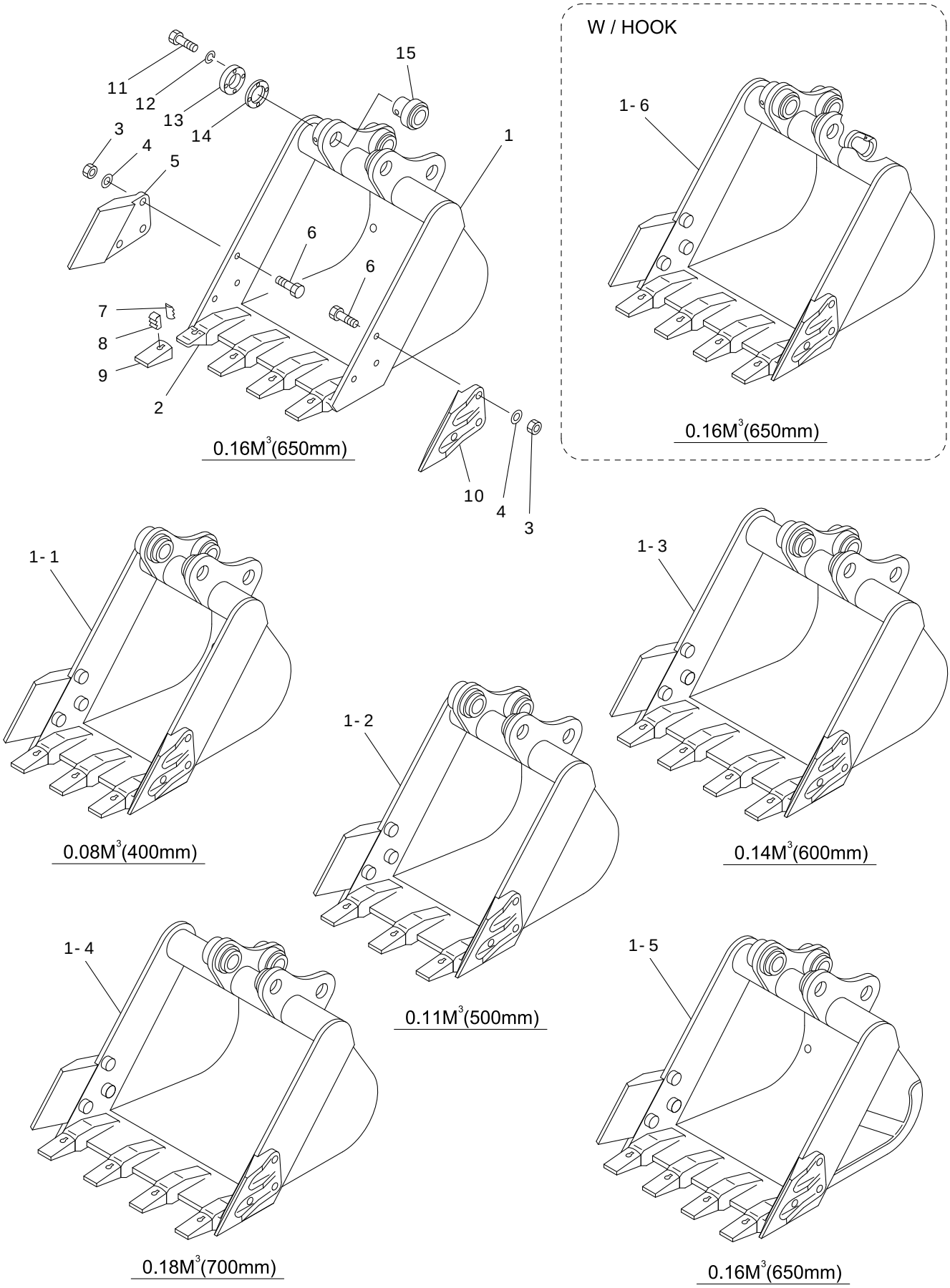

55VX- 110300- 1

https://truckmanualshub.com/

KEY No.	SUP.	PART No.	DESCRIPTION	Q'TY	CHAN.	SERIAL No.	REMARKS
0		F388 255 04	Bucket Ass'y, Hoe (0.16m3)	1		WY010001-	Std.
0-1		F388 255 02	Bucket Ass'y, Hoe (0.08m3)	1		WY010001-	
0-2		F388 255 03	Bucket Ass'y, Hoe (0.11m3)	1		WY010001-	
0-3		F388 255 01	Bucket Ass'y, Hoe (0.14m3)	1		WY010001-	
0-4		F388 255 05	Bucket Ass'y, Hoe (0.18m3)	1		WY010001-	
0-5		F388 254 02	Bucket Ass'y, Hoe (Reinforced, 0.16m3)	1		WY010001-	
0-6		F388 256 02	Bucket Ass'y, Hoe (0.16m3)	1		WY010001-	W/Hook
1	×	D270 158 00	* Bucket, Hoe (0.16m3, 650mm)	1		WY010001-	Std.
1-1	×	D270 156 00	* Bucket, Hoe (0.08m3, 400mm)	1		WY010001-	
1-2	×	D270 157 00	* Bucket, Hoe (0.11m3, 500mm)	1		WY010001-	
1-3	×	D270 155 00	* Bucket, Hoe (0.14m3, 600mm)	1		WY010001-	
1-4	×	D270 159 00	* Bucket, Hoe (0.18m3, 700mm)	1		WY010001-	
1-5	×	D270 154 00	* Bucket, Hoe (0.16m3, 650mm)	1		WY010001-	強化, Reinforced
1-6	×	D270 161 00	* Bucket, Hoe (0.16m3, 650mm)	1		WY010001-	W/Hook
2		0650 001 07	** Adapter, Tooth	AR		WY010001-	
3		0585 140 00	* Nut, Treatment	6		WY010001-	M14
4		D006 051 00	* Washer	6		WY010001-	
5		4123 041 00	* Cutter, Side	1		WY010001-	
6		0555 140 40	* Bolt, Treatment	6		WY010001-	M14X40
7		0650 004 02	* Pin, Rubber	AR		WY010001-	18-20M-LK
8		0650 003 03	* Pin, Lock	AR		WY010001-	18-20M-PN
9		0650 002 04	* Tooth	AR		WY010001-	18S
10		4123 040 00	* Cutter, Side	1		WY010001-	
11		0513 100 30	* Bolt, Treatment	4		WY010001-	M10X30
12		0590 100 00	* Washer, Lock	4		WY010001-	M10
13		4435 636 00	* Flange	1		WY010001-	
14		4007 308 00	* Shim	AR		WY010001-	
15		D131 046 00	* Boss	1		WY010001-	

https://truckmanualshub.com/

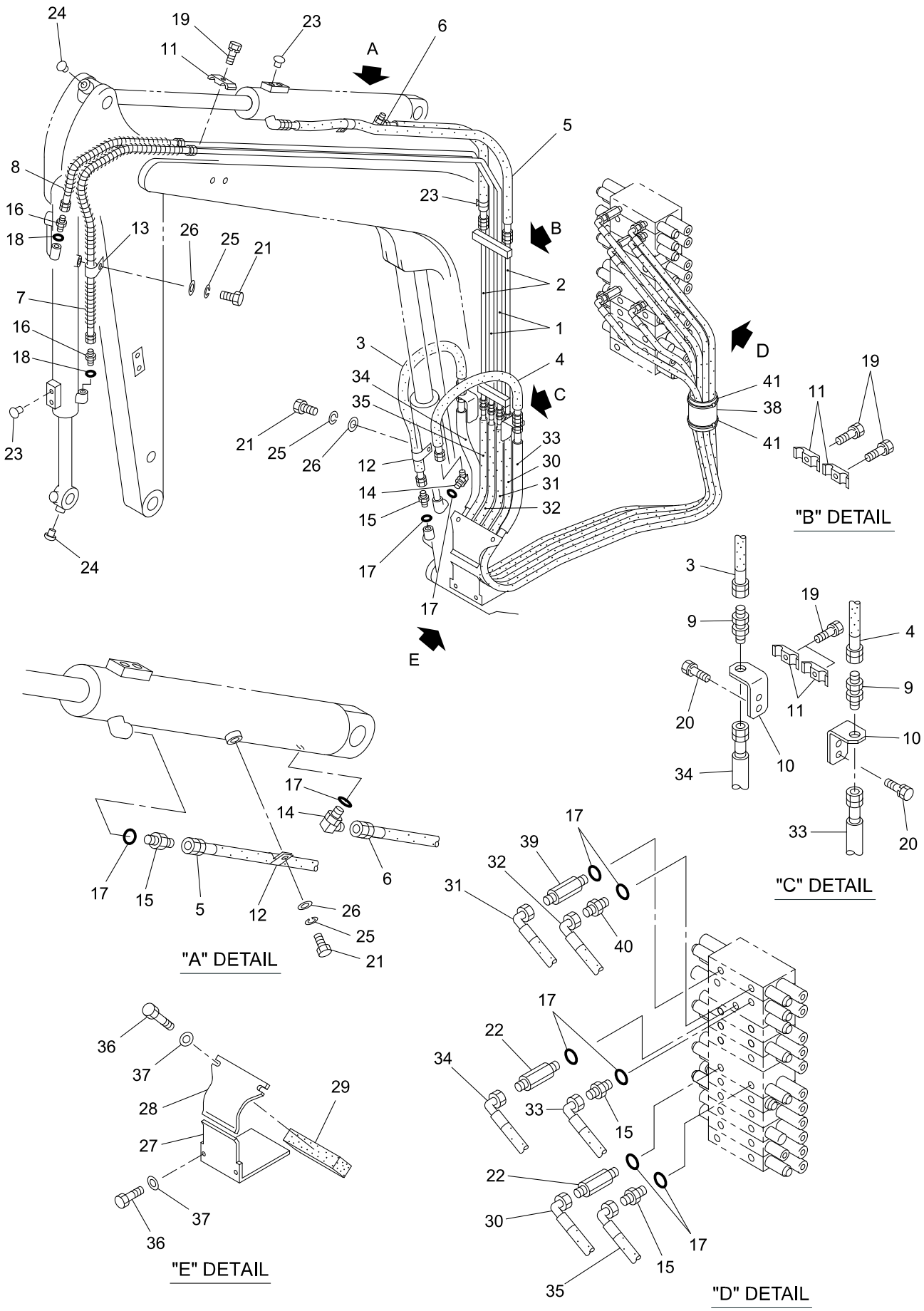

50V4-110400-1

https://truckmanualshub.com/

KEY No.	SUP.	PART No.	DESCRIPTION	Q'TY	CHAN.	SERIAL No.	REMARKS
0	×	F342 649 00	Piping Ass'y, Hoe Attachment	1		WY010001-	
0-1	×	F342 651 00	Piping Ass'y, Hoe Attachment	1		WY010001-	
1		D286 345 00	* Tube	2		WY010001-	
2		D286 202 00	* Tube	2		WY010001-	
3		D070 388 09	* Hose Ass'y	1		WY010001-	L=1300
4		D070 388 01	* Hose Ass'y	1		WY010001-	L=940
5		D070 388 12	* Hose Ass'y	1		WY010001-	L=1380
6		D070 388 16	* Hose Ass'y	1		WY010001-	L=630
7		D070 351 26	* Hose Ass'y	1		WY010001-	L=1490
7-1		D070 351 05	* Hose Ass'y (For Long Arm)	1		WY010001-	L=1750
8		D070 351 15	* Hose Ass'y	1		WY010001-	L=890
8-1		D070 351 29	* Hose Ass'y (For Long Arm)	1		WY010001-	L=1150
9		D060 451 00	* Connector	2		WY010001-	
10		D418 756 00	* Bracket	2		WY010001-	
11		4081 116 00	* Clamp, Tube	5		WY010001-	
12		4080 000 06	* Clamp, Hose	2		WY010001-	
13		4080 000 14	* Clamp, Hose	1		WY010001-	
14		0710 113 44	* Elbow	2		WY010001-	
15		0713 700 04	* Adapter	4		WY010001-	
16		0713 700 03	* Adapter	2		WY010001-	
17		0760 710 19	* Ring, O	10		WY010001-	P18-90B
18		0760 710 16	* Ring, O	2		WY010001-	P14-90B
19		0520 100 40	* Bolt, Treatment (W/L.W)	5		WY010001-	M10X40 P=1.25
20		0520 100 20	* Bolt, Treatment (W/L.W)	4		WY010001-	M10X20 P=1.25
21		0513 100 16	* Bolt, Treatment	3		WY010001-	M10X16
22		4072 971 00	* Connector	2		WY010001-	PF1/2XPF3/8
23		0690 201 08	* Plug	4		WY010001-	
24		0690 201 09	* Plug	2		WY010001-	
25		0590 100 00	* Washer, Lock	3		WY010001-	M10
26		0593 100 00	* Washer, Flat	3		WY010001-	M10
27		D458 444 00	* Cover	1		WY010001-	
28		D458 434 00	* Cover	1		WY010001-	
29		D580 163 00	* Pad	1		WY010001-	
30		D070 385 09	* Hose Ass'y	1		WY010001-	L=2830
30-1	☆	4405 320 01	* Decal (AA)	2		WY010001-	4405 320 00
31		D070 386 03	* Hose Ass'y	1		WY010001-	L=3080
31-1	☆	4405 319 01	* Decal (CA)	2		WY010001-	4405 319 00
32		D070 386 04	* Hose Ass'y	1		WY010001-	L=3000
32-1	☆	4405 319 02	* Decal (CB)	2		WY010001-	4405 319 00
33		D070 385 06	* Hose Ass'y	1		WY010001-	L=3170
33-1	☆	4405 318 02	* Decal (BB)	2		WY010001-	4405 318 00
34		D070 385 07	* Hose Ass'y	1		WY010001-	L=3100
34-1	☆	4405 318 01	* Decal (BA)	2		WY010001-	4405 318 00
35		D070 385 08	* Hose Ass'y	1		WY010001-	L=2770
35-1	☆	4405 320 02	* Decal (AB)	2		WY010001-	4405 320 00
36		0550 120 20	* Bolt, Hex.	4		WY010001-	M12X20
37		0595 120 00	* Washer, Treatment	4		WY010001-	M12
38		4070 351 03	* Cover, Hose	1		WY010001-	
39		D060 071 00	* Bush, Reducer	1		WY010001-	PF1/2XPF3/8
40		0713 700 78	* Adapter, Reducer	1		WY010001-	PF1/2XPF3/8
41		0820 067 10	* Band, Cable	2		WY010001-	

https://truckmanualshub.com/

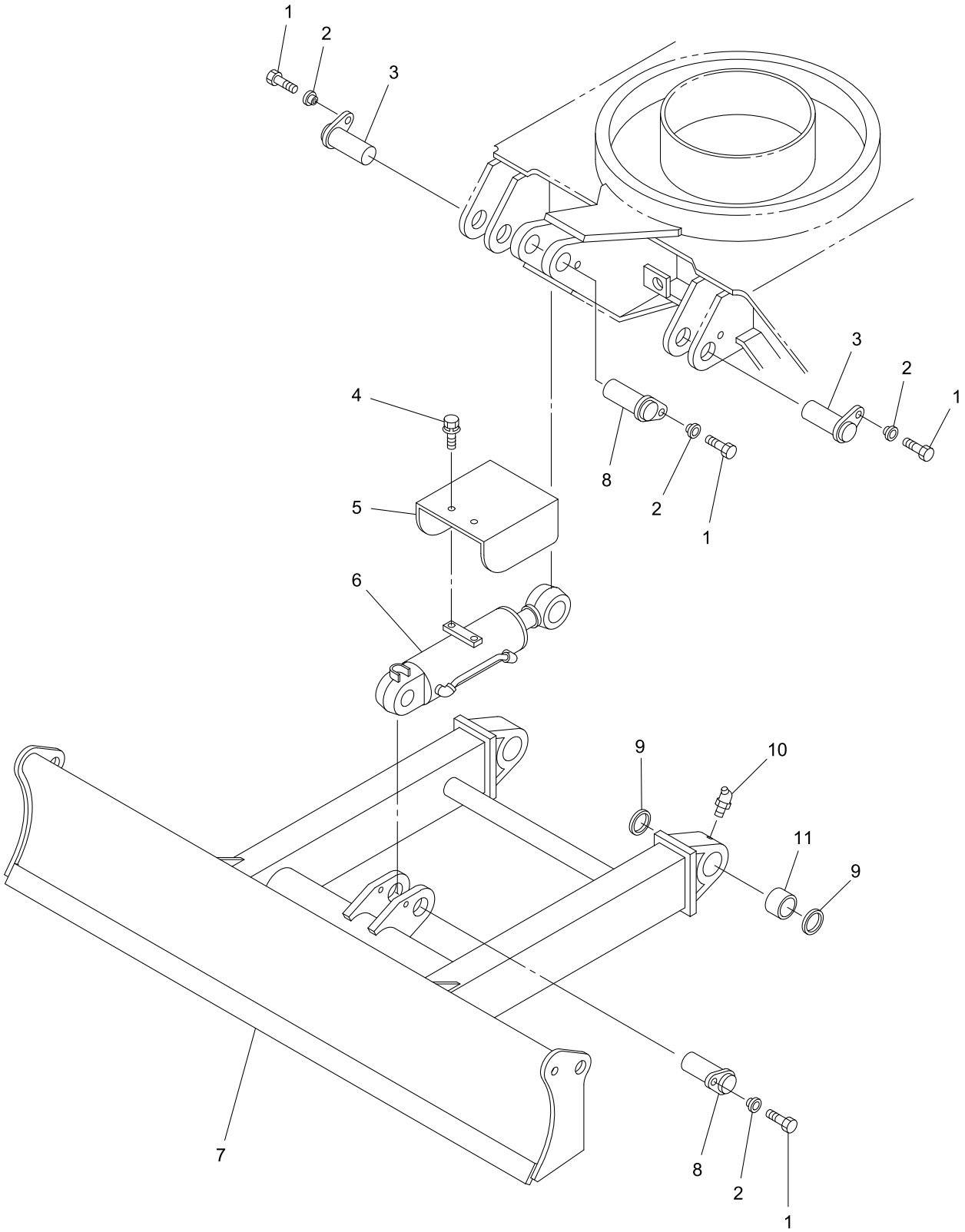

40V4-120100-1

https://truckmanualshub.com/

KEY No.	SUP.	PART No.	DESCRIPTION	Q'TY	CHAN.	SERIAL No.	REMARKS
0	×	F301 019 00	Attachment Ass'y, Blade	1		WY010001-	
1		0558 160 30	* Bolt, Treatment	4		WY010001-	M16X30 P=1.5
2		D047 058 00	* Bushing	4		WY010001-	
3		D017 234 01	* Pin, Wing	2		WY010001-	
4		0518 100 20	* Bolt, Treatment (W/L.W, F.W)	2		WY010001-	M10X20 P=1.25
5		D456 908 00	* Cover	1		WY010001-	
6	#	0782 608 UA	* Cylinder Ass'y, Blade	1		WY010001-	Sh. No. 5-12
7		D257 110 00	* Blade	1		WY010001-	
8		D017 254 01	* Pin, Wing	2		WY010001-	
9		0765 033 28	* Seal, Dust	4		WY010001-	
10		0728 111 65	* Nipple, Grease	2		WY010001-	PT1/8X90
11		4043 376 01	* Bushing	2		WY010001-	

12

https://truckmanualshub.com/

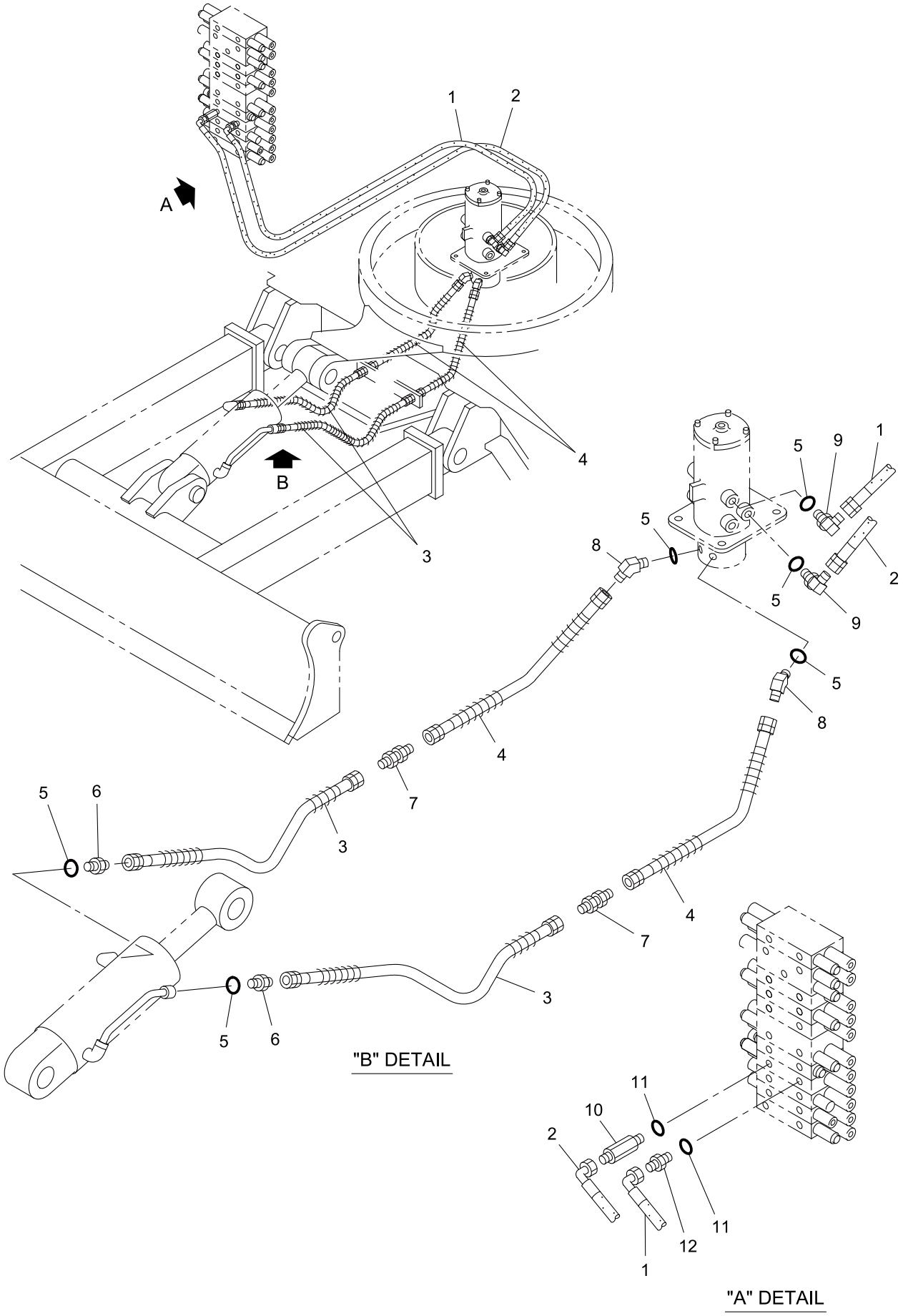

40V4-120200-1

https://truckmanualshub.com/

KEY No.	SUP.	PART No.	DESCRIPTION	Q'TY	CHAN.	SERIAL No.	REMARKS
0	×	F342 647 00	Piping Ass'y, Blade	1		WY010001-	
0-1	×	F342 651 00	Piping Ass'y, Blade	1		WY010001-	
1		D070 362 10	* Hose Ass'y	1		WY010001-	L=1300
2		D070 362 11	* Hose Ass'y	1		WY010001-	L=1390
3		D070 348 02	* Hose Ass'y	2		WY010001-	L=500
4		D070 349 01	* Hose Ass'y	2		WY010001-	L=370
5		0760 710 16	* Ring, O	6		WY010001-	P14-90B
6		0713 700 03	* Adapter	2		WY010001-	
7		D060 032 00	* Adapter	2		WY010001-	
8		0710 114 33	* Elbow, 45	2		WY010001-	
9		0710 122 02	* Elbow	2		WY010001-	
10		D060 071 00	* Connector, Reducer	1		WY010001-	PF1/2XPF3/8
11		0760 710 19	* Ring, O	2		WY010001-	P18-90B
12		0713 700 78	* Connector, Reducer	1		WY010001-	PF1/2XPF3/8

https://truckmanualshub.com/

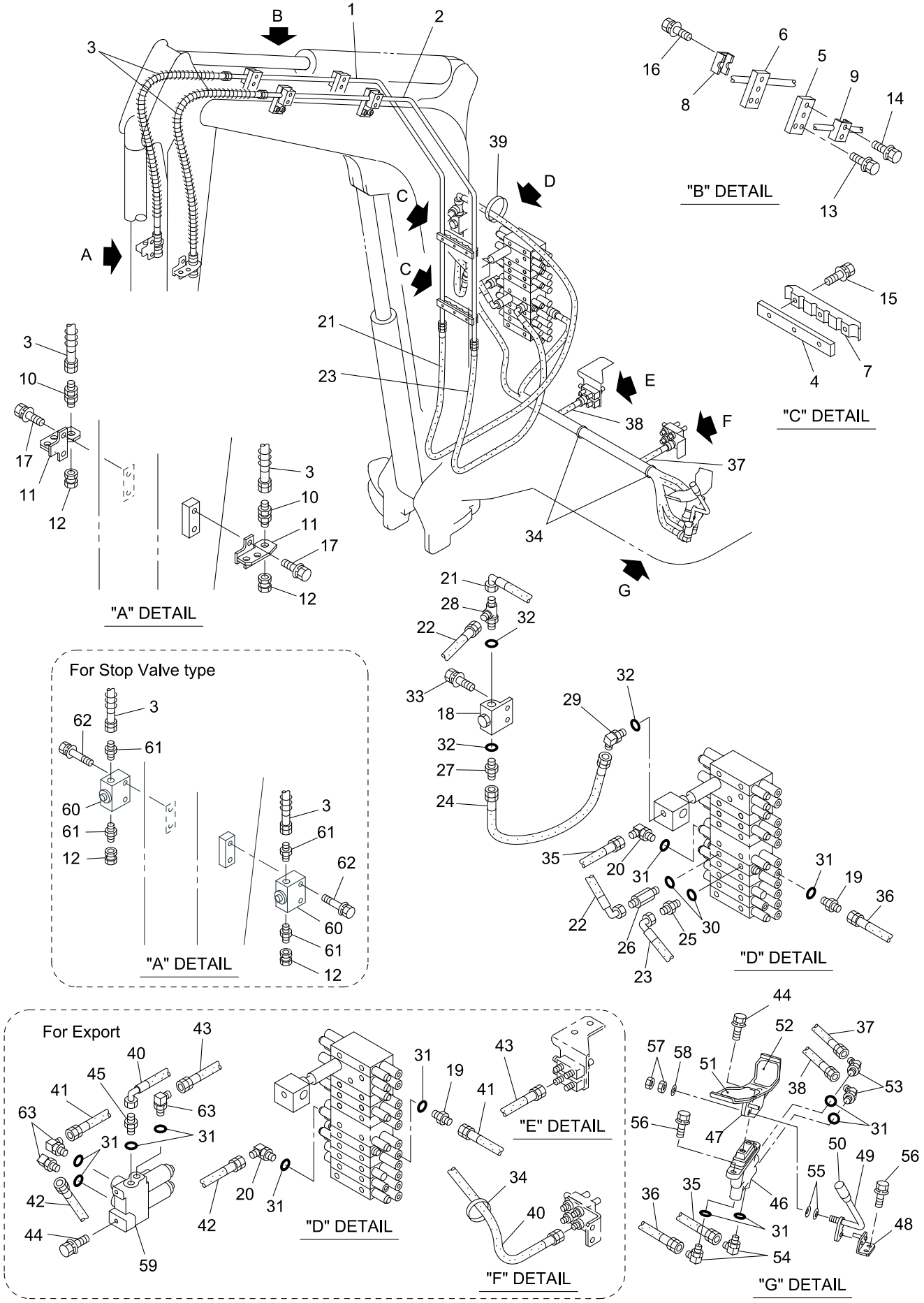

40V4-150100-1

https://truckmanualshub.com/

KEY No.	SUP.	PART No.	DESCRIPTION	Q'TY	CHAN.	SERIAL No.	REMARKS
0	×	F342 664 00	Piping Ass'y, First Spare	1		WY010001-	
1		D286 240 00	* Tube	1		WY010001-	
2		D286 241 00	* Tube	1		WY010001-	
3		D070 372 01	* Hose Ass'y	2		WY010001-	L=900
4		D082 034 00	* Seat, Clamp	2		WY010001-	
5		D082 111 00	* Seat, Clamp	2		WY010001-	
6		D082 110 00	* Seat, Clamp	2		WY010001-	
7		D081 193 00	* Clamp, Tube	2		WY010001-	
8		D081 195 00	* Clamp, Tube	2		WY010001-	
9		D081 023 00	* Clamp, Tube	2		WY010001-	
10		D060 500 00	* Connector	2		WY010001-	
11		D418 813 00	* Bracket	2		WY010001-	
12		0710 303 06	* Plug, Swivel	2		WY010001-	
13		0518 100 25	* Bolt, Treatment (W/L.W, F.W)	8		WY010001-	M10X25 P=1.25
14		0518 100 45	* Bolt, Treatment (W/L.W, F.W)	4		WY010001-	M10X45 P=1.25
15		0518 100 50	* Bolt, Treatment (W/L.W, F.W)	6		WY010001-	M10X50 P=1.25
16		0518 100 55	* Bolt, Treatment (W/L.W, F.W)	4		WY010001-	M10X55 P=1.25
17		0518 100 20	* Bolt, Treatment (W/L.W, F.W)	4		WY010001-	M10X20 P=1.25
18		0725 004 UA	* Valve, Stop	1		WY010001-	
19		0713 700 70	* Adapter	1		WY010001-	
20		0710 122 09	* Elbow	1		WY010001-	
21		D070 387 02	* Hose Ass'y	1		WY010001-	L=3450
22		D070 363 25	* Hose Ass'y	1		WY010001-	L=420
23		D070 385 10	* Hose Ass'y	1		WY010001-	L=2900
24		4070 754 25	* Hose Ass'y	1		WY010001-	L=850
25		0713 700 72	* Adapter	1		WY010001-	
26		4072 971 00	* Connector	1		WY010001-	
27		0713 700 73	* Adapter	1		WY010001-	
28		D060 511 00	* Tee	1		WY010001-	
29		0710 113 66	* Elbow	1		WY010001-	
30		0760 710 19	* Ring, O	2		WY010001-	P18-90B
31		0760 710 12	* Ring, O	6		WY010001-	P11-90B
32		0760 710 24	* Ring, O	3		WY010001-	P22.4-90B
33		0517 080 30	* Bolt, Treatment (W/L.W, F.W)	2		WY010001-	M8X30
34		0820 067 05	* Band, Cable	4		WY010001-	
35		4070 548 41	* Hose Ass'y	1		WY010001-	L=1850
35-1	☆	D407 125 02	* Decal (Y2)	2		WY010001-	D407 125 00
36		4070 548 19	* Hose Ass'y	1		WY010001-	L=1250
36-1	☆	D407 125 01	* Decal (Y1)	2		WY010001-	D407 125 00
37		4070 548 27	* Hose Ass'y	1		WY010001-	L=600
38		4070 548 16	* Hose Ass'y	1		WY010001-	L=850
39		0820 067 04	* Band, Cable	1		WY010001-	
40		4070 551 18	* Hose Ass'y	1		WY010001-	L=1460
41		4070 548 50	* Hose Ass'y	1		WY010001-	L=460
41-1	☆	D407 125 01	* Decal (Y1)	2		WY010001-	D407 125 00
42		4070 548 18	* Hose Ass'y	1		WY010001-	L=1050
42-1	☆	D407 125 02	* Decal (Y2)	2		WY010001-	D407 125 00
43		4070 548 13	* Hose Ass'y	1		WY010001-	L=1100
44		0517 080 16	* Bolt, Treatment (W/L.W, F.W)	2		WY010001-	M8X16
45		0713 700 70	* Adapter	1		WY010001-	
46	#	0783 965 UA	* Valve Ass'y, Pilot	1		WY010001-	Sh. No. 5-14
47		D501 059 00	* Pedal	1		WY010001-	

https://truckmanualshub.com/

KEY No.	SUP.	PART No.	DESCRIPTION	Q'TY	CHAN.	SERIAL No.	REMARKS
48		D416 915 00	* Bracket	1		WY010001-	
49		4497 989 00	* Lever	1		WY010001-	
50		4096 033 00	* Grip	1		WY010001-	
51		D406 930 00	* Pad, Rubber	1		WY010001-	
52		D406 931 00	* Pad, Rubber	1		WY010001-	
53		0710 121 00	* Elbow, 45	2		WY010001-	
54		0710 122 09	* Elbow	2		WY010001-	
55		0591 080 00	* Washer, Conical Spring	2		WY010001-	
56		0517 080 20	* Bolt, Treatment (W/L.W, F.W)	4		WY010001-	M8X20
57		0544 080 00	* Nut, Hex.	2		WY010001-	M8
58		0593 080 00	* Washer, Flat	1		WY010001-	M8
59		0785 169 UA	* Valve, Solenoid	1		WY010001-	
60		0754 805 UA	* Cock	2		WY010001-	
61		0712 310 33	* Adapter	4		WY010001-	
62		0520 100 70	* Bolt, Treatment (W/L.W)	4		WY010001-	M10X70 P=1.25
63		0710 122 09	* Elbow	3		WY010001-	

https://truckmanualshub.com/

[Memo]

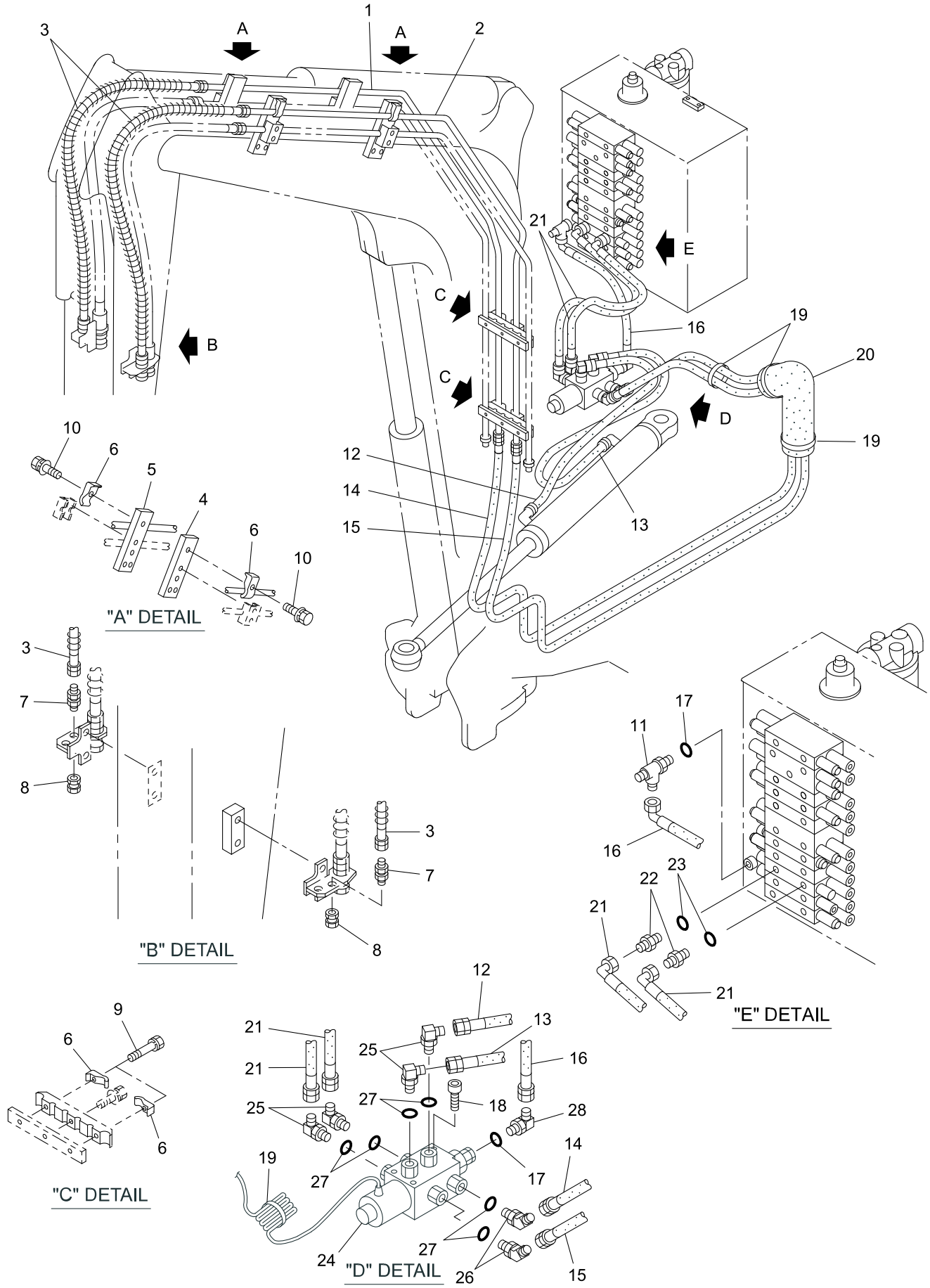

40V4-150200-1

https://truckmanualshub.com/

KEY No.	SUP.	PART No.	DESCRIPTION	Q'TY	CHAN.	SERIAL No.	REMARKS
0	×	F342 664 00	Piping Ass'y, Second Spare	1		WY010001-	
1		D286 242 00	* TUBE	1		WY010001-	
2		D286 243 00	* TUBE	1		WY010001-	
3		D070 373 04	* Hose Ass'y	2		WY010001-	L=980
4		D082 109 00	* Seat, Clamp	2		WY010001-	
5		D082 108 00	* Seat, Clamp	2		WY010001-	
6		4081 118 00	* Clamp, Tube	8		WY010001-	
7		D060 137 00	* Adapter	2		WY010001-	
8		0710 303 02	* Plug, Swivel	2		WY010001-	PF1/4
9		0520 100 70	* Bolt, Treatment (W/L.W)	4		WY010001-	M10X70 P=1.25
10		0518 100 40	* Bolt, Treatment (W/L.W, F.W)	4		WY010001-	M10X40 P=1.25
11		0710 713 09	* Tee	1		WY010001-	
12		D070 361 02	* Hose Ass'y	1		WY010001-	L=390
13		D070 361 03	* Hose Ass'y	1		WY010001-	L=490
14		D070 410 03	* Hose Ass'y	1		WY010001-	L=2900
14-1	☆	4405 308 03	* Decal (R2)	2		WY010001-	4405 308 00
15		D070 410 03	* Hose Ass'y	1		WY010001-	L=2900
15-1	☆	4405 310 03	* Decal (L2)	2		WY010001-	4405 310 00
16		4070 551 14	* Hose Ass'y	1		WY010001-	L=260
17		0760 710 12	* Ring, O	2		WY010001-	P11-90B
18		0562 060 35	* Bolt, Socket Head	3		WY010001-	M6X35
19		0820 067 09	* Band, Cable	4		WY010001-	
20		4070 854 11	* Cover, Hose	1		WY010001-	L=200
21		D070 360 02	* Hose Ass'y	2		WY010001-	L=710
22		D060 503 00	* Connector	2		WY010001-	
23		0760 710 19	* Ring, O	2		WY010001-	P18-90B
24		0786 988 UA	* Valve Ass'y, Solenoid	1		WY010001-	
25		0710 113 32	* Elbow, Reducer	4		WY010001-	PF3/8XPF1/4
26		0710 114 32	* Elbow, 45 Reducer	2		WY010001-	PF1/4XPF3/8
27		0760 710 16	* Ring, O	6		WY010001-	P14-90B
28		0710 122 09	* Elbow	1		WY010001-	

https://truckmanualshub.com/

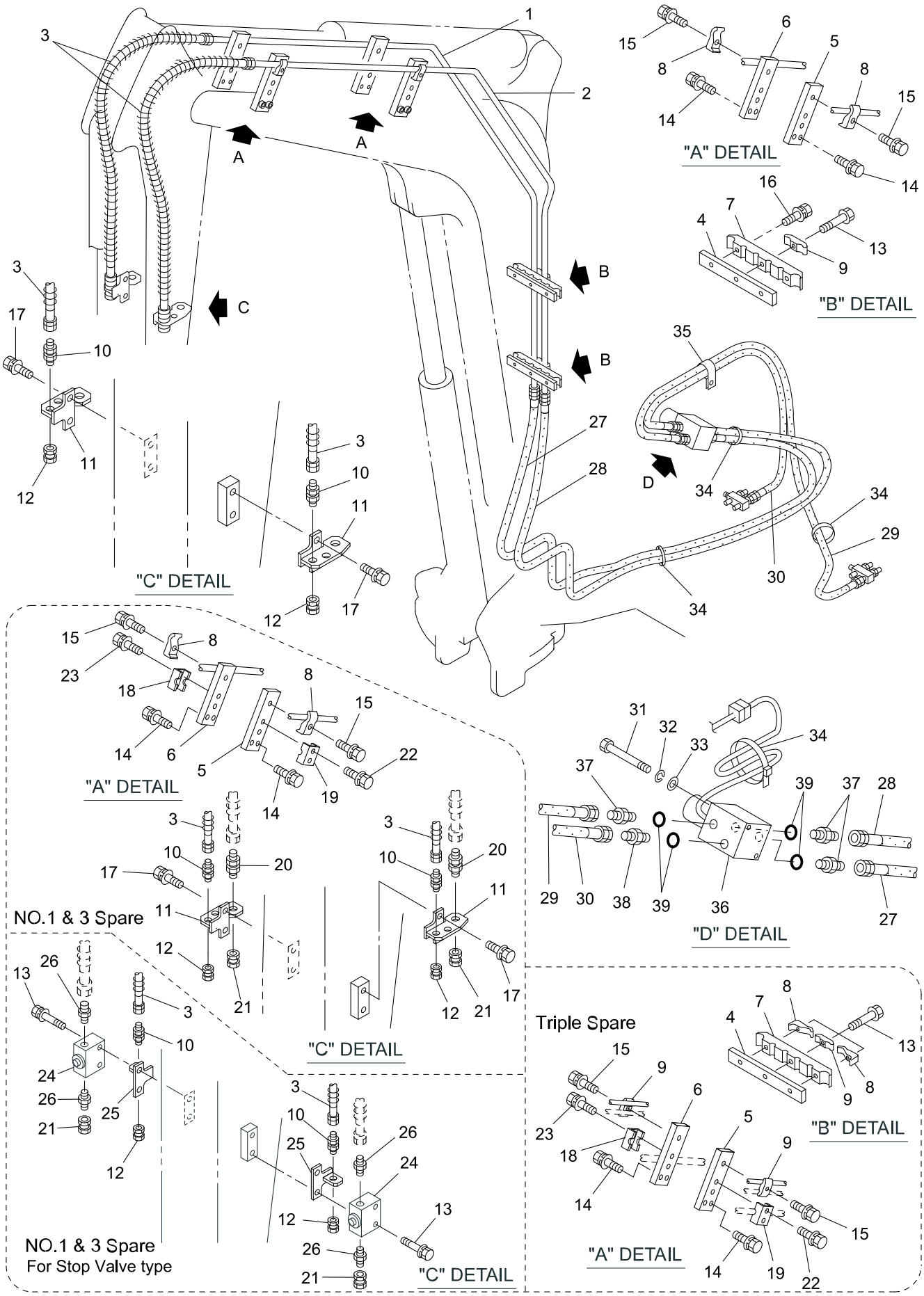

40V4-150300-1

https://truckmanualshub.com/

KEY No.	SUP.	PART No.	DESCRIPTION	Q'TY	CHAN.	SERIAL No.	REMARKS
0	×	F342 664 00	Piping Ass'y, Third Spare	1		WY010001-	
1		D286 244 00	* TUBE	1		WY010001-	
2		D286 245 00	* TUBE	1		WY010001-	
3		D070 373 02	* Hose Ass'y	2		WY010001-	L=1030
4		D082 034 00	* Seat, Clamp	2		WY010001-	
5		D082 109 00	* Seat, Clamp	2		WY010001-	
6		D082 108 00	* Seat, Clamp	2		WY010001-	
7		D081 193 00	* Clamp, Tube	2		WY010001-	
8		4081 118 00	* Clamp, Tube	4		WY010001-	
9		4081 189 00	* Clamp, Tube	2		WY010001-	
10		D060 137 00	* Adapter	2		WY010001-	
11		D418 813 00	* Bracket	2		WY010001-	
12		0710 303 02	* Plug, Swivel	2		WY010001-	PF1/4
13		0520 100 70	* Bolt, Treatment (W/L.W)	3		WY010001-	M10X70 P=1.25
14		0518 100 25	* Bolt, Treatment (W/L.W, F.W)	8		WY010001-	M10X25 P=1.25
15		0518 100 40	* Bolt, Treatment (W/L.W, F.W)	4		WY010001-	M10X40 P=1.25
16		0518 100 50	* Bolt, Treatment (W/L.W, F.W)	4		WY010001-	M10X50 P=1.25
17		0518 100 20	* Bolt, Treatment (W/L.W, F.W)	4		WY010001-	M10X20 P=1.25
18		D081 195 00	* Clamp, Tube	2		WY010001-	
19		D081 023 00	* Clamp, Tube	2		WY010001-	
20		D060 500 00	* Connector	2		WY010001-	
21		0710 303 06	* Plug Swivel	2		WY010001-	
22		0518 100 45	* Bolt, Treatment (W/L.W, F.W)	4		WY010001-	M10X45 P=1.25
23		0518 100 55	* Bolt, Treatment (W/L.W, F.W)	4		WY010001-	M10X55 P=1.25
24		0754 805 UA	* Cook	2		WY010001-	
25		D418 815 00	* Bracket	2		WY010001-	
26		0712 310 33	* Adapter	4		WY010001-	
27		D070 195 22	* Hose Ass'y	1		WY010001-	L=2590
27-1	☆	4405 307 04	* Decal (R3)	2		WY010001-	4405 307 00
28		D070 195 22	* Hose Ass'y	1		WY010001-	L=2590
28-1	☆	4405 309 04	* Decal (L3)	2		WY010001-	4405 309 00
29		4070 548 61	* Hose Ass'y	1		WY010001-	L=1700
30		4070 782 22	* Hose Ass'y	1		WY010001-	L=1250
31		0513 080 90	* Bolt, Treatment	2		WY010001-	M8X90
32		0590 080 00	* Washer, Lock	2		WY010001-	M8
33		0593 080 00	* Washer, Flat	2		WY010001-	M8
34		0820 067 09	* Band, Cable	4		WY010001-	
35		4080 000 29	* Clamp, Hose	1		WY010001-	
36		0785 171 UA	* Valve Ass'y, Solenoid	1		WY010001-	
37		0713 700 70	* Connector	3		WY010001-	
38		0713 700 93	* Adapter, Reducer	1		WY010001-	PF1/4XPF3/8
39		0760 710 12	* Ring, O	4		WY010001-	P11-90B

https://truckmanualshub.com/

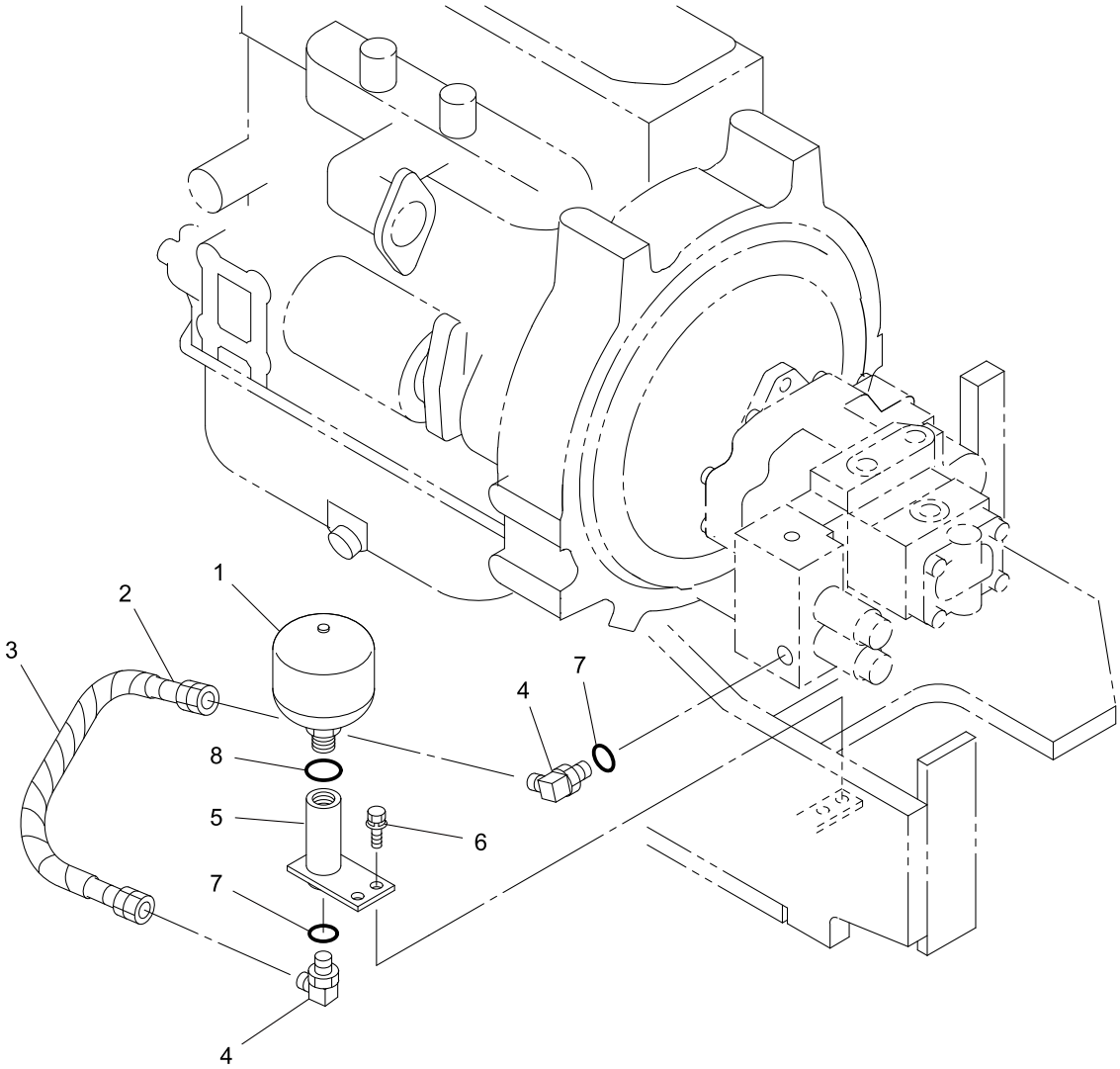

40V4-150400-1

https://truckmanualshub.com/

KEY No.	SUP.	PART No.	DESCRIPTION	Q'TY	CHAN.	SERIAL No.	REMARKS
0	×	F342 676 00	Accumulator Ass'y	1		WY010001-	
1		0759 301 UA	* Accumulator	1		WY010001-	
2		4070 056 32	* Hose Ass'y	1		WY010001-	L=350
3		0820 803 05	* Tube, Corrugate	M		WY010001-	L=350
4		0710 122 10	* Elbow	2		WY010001-	
5		D060 512 00	* Connector	1		WY010001-	
6		0517 080 20	* Bolt, Treatment (W/L.W, F.W)	2		WY010001-	M8X20
7		0760 710 16	* Ring, O	2		WY010001-	P14-90B
8		0760 710 19	* Ring, O	1		WY010001-	P18-90B

https://truckmanualshub.com/

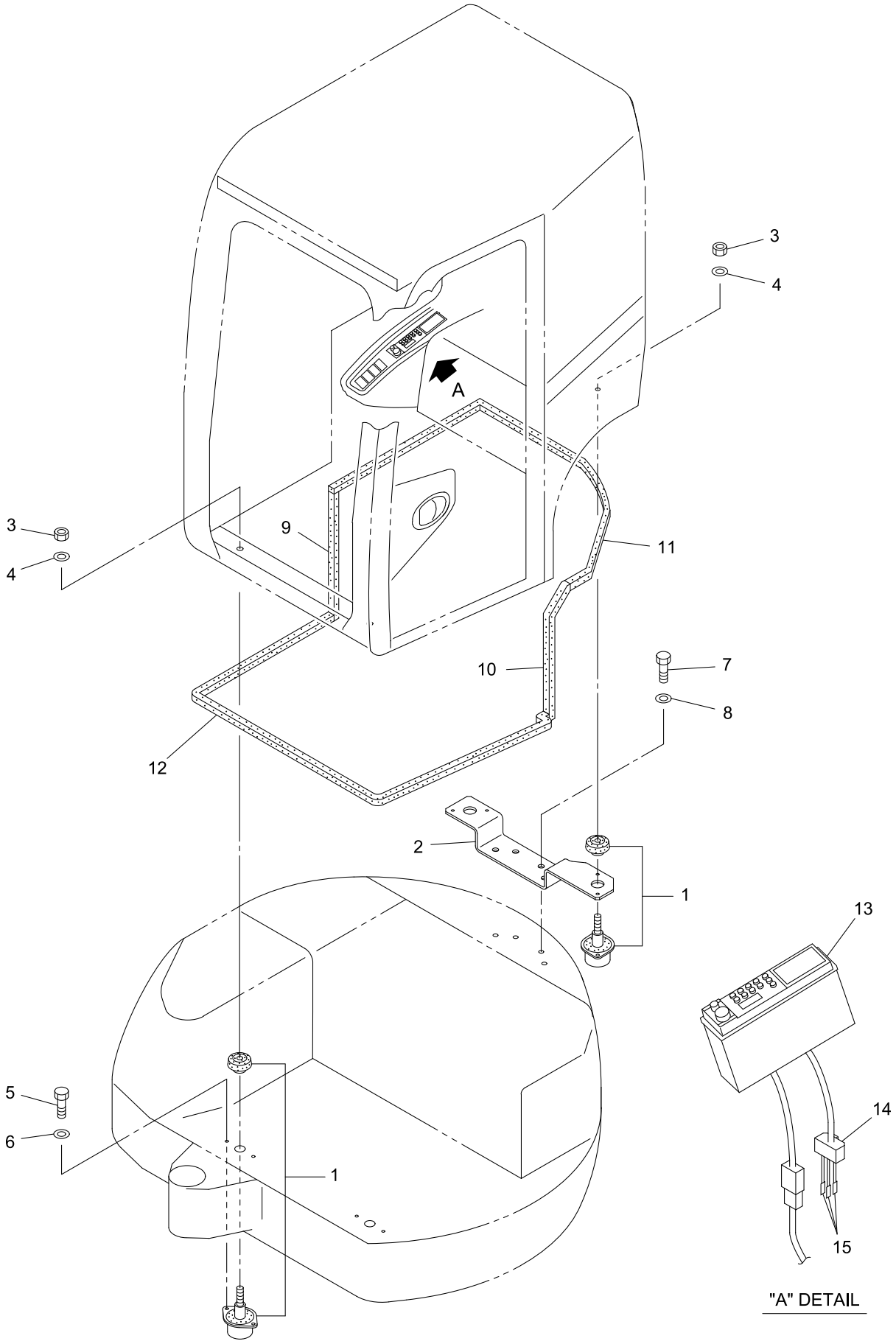

V4ALL-150500-1

https://truckmanualshub.com/

KEY No.	SUP.	PART No.	DESCRIPTION	Q'TY	CHAN.	SERIAL No.	REMARKS
0	×	F355 182 00	Room Ass'y, Operator	1		WY010001-	
1		0690 203 15	* Mount, Cab	4		WY010001-	
2		D418 455 00	* Bracket	1		WY010001-	
3		0585 200 00	* Nut, Treatment	4		WY010001-	M20
4		0595 200 00	* Washer, Treatment	4		WY010001-	M20
5		0555 100 40	* Bolt, Treatment	8		WY010001-	M10X40
6		0595 100 00	* Washer, Treatment	8		WY010001-	M10
7		0555 160 50	* Bolt, Treatment	4		WY010001-	M16X50
8		0595 160 00	* Washer, Treatment	4		WY010001-	M16
9		D493 753 02	* Seal, Sponge	1		WY010001-	L=500
10		D493 753 01	* Seal, Sponge	1		WY010001-	L=430
11		4550 906 25	* Seal, Sponge	1		WY010001-	L=1900
12		4550 906 26	* Seal, Sponge	1		WY010001-	L=2250
13		0850 500 10	* Radio	1		WY010001-	For Japanese
14		0830 408 00	* Housing	1		WY010001-	
15		0820 657 08	* Terminal	3		WY010001-	

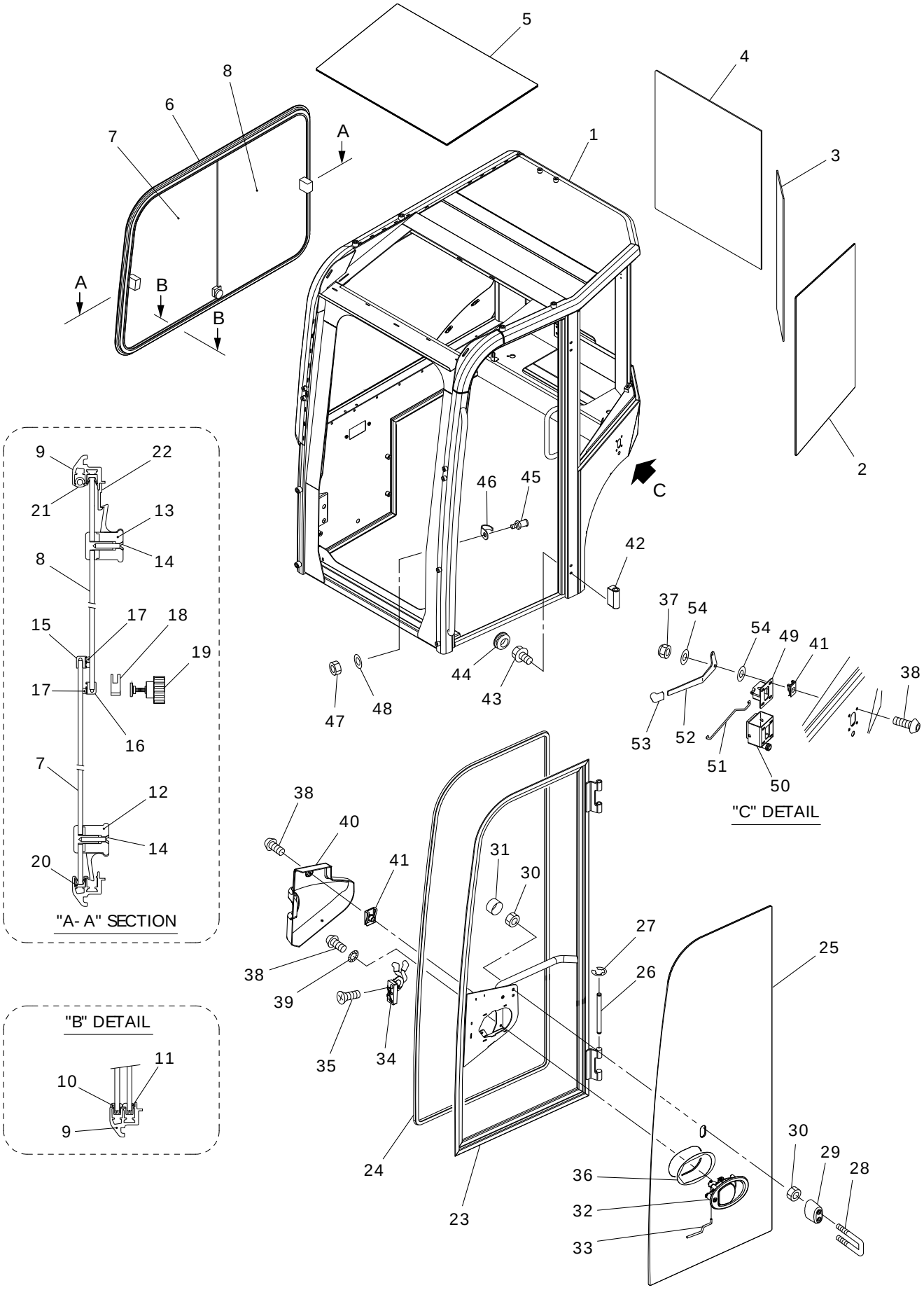

V4ALL- 150600- 1

https://truckmanualshub.com/

KEY No.	SUP.	PART No.	DESCRIPTION	Q'TY	CHAN.	SERIAL No.	REMARKS
0	×	3034212018	Cabin Ass'y (Dark Grey)	1		WY010001-	
0-1	×	3034212019	Cabin Ass'y (Light Grey)	1		WY010001-	
1		F354 810 00	* Cabin (Dark Grey)	1		WY010001-	
1-1		5290105300	* Cabin (Light Grey)	1		WY010001-	
2		4016000000	* Glass (L.H.)	1		WY010001-	
3		4016000001	* Glass (Rear Side)	1		WY010001-	
4		4016000002	* Glass (Rear)	1		WY010001-	
5		4016000003	* Glass (Roof)	1		WY010001-	
6		4016000004	* Window Ass'y, Side	1		WY010001-	
7		4016000005	** Glass (Front)	1		WY010001-	
8		4016000006	** Glass (Rear)	1		WY010001-	
9		4016000007	** Frame, Glass	1		WY010001-	
10		4016000008	** Shoe (Front)	1		WY010001-	
11		4016000009	** Shoe (Rear)	1		WY010001-	
12		4016000010	** Handle, Sliding (Front)	1		WY010001-	
13		4016000011	** Handle, Sliding (Rear)	1		WY010001-	
14		4016000012	** Bolt	4		WY010001-	4.8X32
15		4016000013	** Support, Brush (Front)	1		WY010001-	
16		4016000014	** Support, Brush (Rear)	2		WY010001-	
17		4016000015	** Brush	3		WY010001-	
18		4016000016	** Glass Blocking	1		WY010001-	
19		4016000017	** Handle, Glass Blocking	1		WY010001-	
20		4016000018	** Support, Sliding	2		WY010001-	
21		4016000019	** Gasket	2		WY010001-	
22		4016000020	** Handle, Stop	1		WY010001-	
23		4016000021	* Frame, Door (Dark Grey)	1		WY010001-	
23-1		4016000022	* Frame, Door (Light Grey)	1		WY010001-	
24		4016000023	* Gasket	1		WY010001-	L=4050
25		4016000024	* Glass (Door)	1		WY010001-	
26		4015000088	* Pin, Hinge	2		WY010001-	
27		4015000092	* Ring, Elastic	4		WY010001-	d=10
28		4016000025	* Hook, Door Stop	1		WY010001-	L=94
28-1		4016000026	* Hook, Door Stop	1		WY010001-	L=120
29		4016000027	* Absorber, Shock	1		WY010001-	H=50
29-1		4016000028	* Absorber, Shock	1		WY010001-	H=77
30		4016000029	* Nut, Special	4		WY010001-	M8
31		4012000206	* Cap	2		WY010001-	M8
32		4016000030	* Handle Ass'y	1		WY010001-	
33		4016000031	* Rod	1		WY010001-	
34		4013001426	* Lock, Door	1		WY010001-	
35		3442505	* Bolt	1		WY010001-	M8X40
36		4012000390	* Gasket	1		WY010001-	
37		4015000091	* Nut	1		WY010001-	M8
38		4016000033	* Bolt	10		WY010001-	M6X16
39		4012000185	* Washer Toothed	4		WY010001-	M6
40		4016000034	* Cover	1		WY010001-	
41		4016000035	* Clip	6		WY010001-	M6
42		4016000036	* Hinge	2		WY010001-	
43		4016000037	* Bolt	4		WY010001-	M8X16
44		4016000038	* Cap	4		WY010001-	d=20
45		4013001417	* Block	1		WY010001-	
46		4013001418	* Block, Security	1		WY010001-	

https://truckmanualshub.com/

KEY No.	SUP.	PART No.	DESCRIPTION	Q'TY	CHAN.	SERIAL No.	REMARKS
47		4012000260	* Nut	1		WY010001-	M12X1
48		4015000109	* Washer Flat	1		WY010001-	12.5X28
49		4012000138	* Door Stop	1		WY010001-	
50		4012000257	* Bracket	1		WY010001-	
51		4016000039	* Rod, Tie	1		WY010001-	
52		4016000040	* Lever	1		WY010001-	
53		4012000259	* Handle	1		WY010001-	
54		4016000041	* Washer Flat	2		WY010001-	8.5X24

https://truckmanualshub.com/

[Memo]

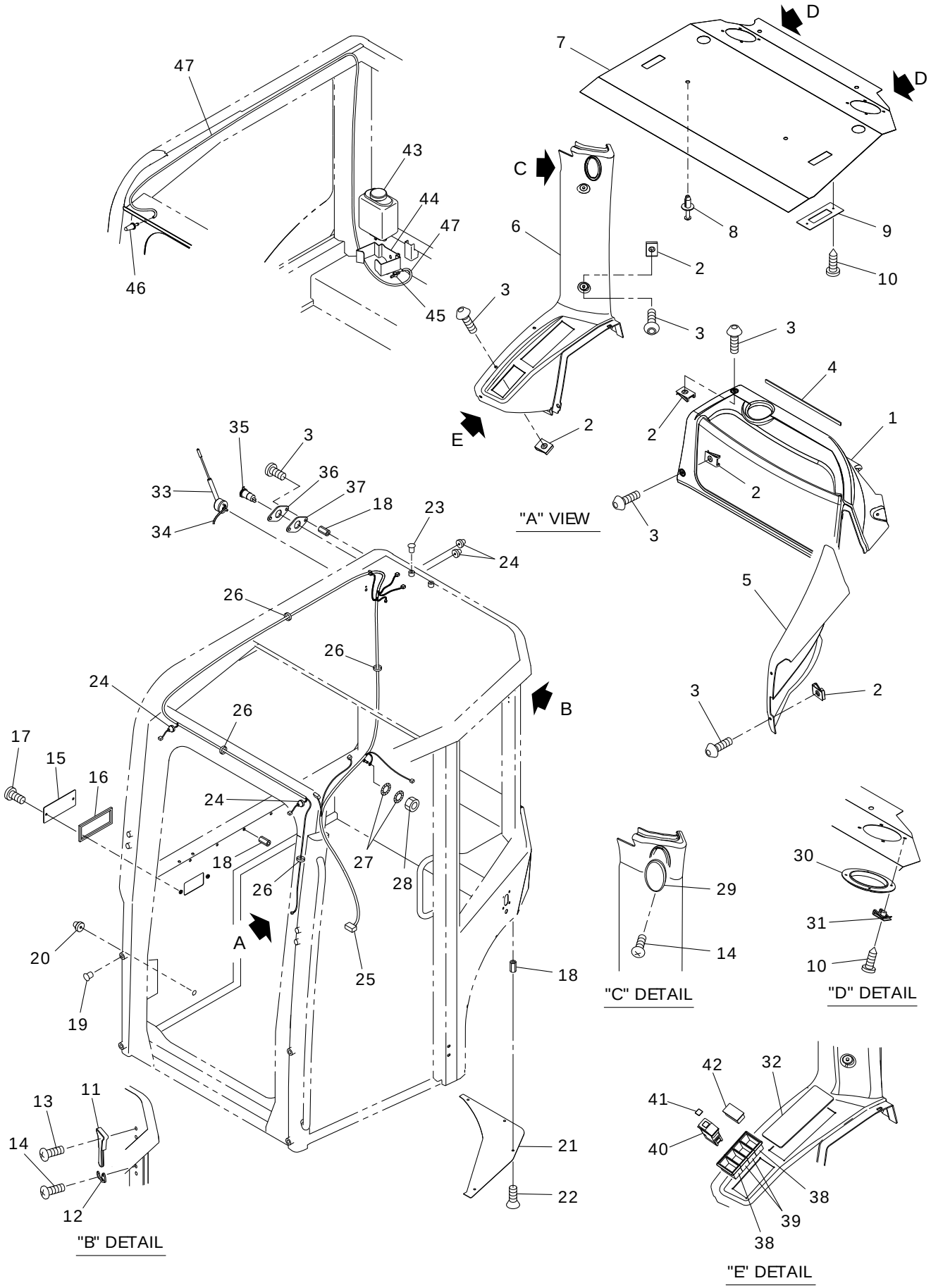

V4ALL-150700-1

https://truckmanualshub.com/

KEY No.	SUP.	PART No.	DESCRIPTION	Q'TY	CHAN.	SERIAL No.	REMARKS
0	×	3034212018	Cabin Ass'y (Dark Grey)	1		WY010001-	
0-1	×	3034212019	Cabin Ass'y (Light Grey)	1		WY010001-	
1		4016000042	* Cover (Rear)	1		WY010001-	
2		4016000035	* Clip	12		WY010001-	M6
3		4016000033	* Bolt	12		WY010001-	M6X16
4		4016000043	* Gasket	1		WY010001-	L=325
5		4016000044	* Cover (Left)	1		WY010001-	
6		4016000045	* Cover (Right Upright)	1		WY010001-	
7		4016000046	* Roof Coating	1		WY010001-	
8		4016000047	* Clip	4		WY010001-	d=8
9		4016000048	* Bracket	2		WY010001-	
10		4016000049	* Bolt	8		WY010001-	4.2X22
11		4016000050	* Hammer, Emergency	1		WY010001-	
12		4012000239	* Hook	1		WY010001-	
13		4012000291	* Bolt	2		WY010001-	3.5X16
14		4016000051	* Bolt	4		WY010001-	4.2X13
15		4016000052	* Bracket	1		WY010001-	
16		4016000053	* Gasket	1		WY010001-	L=470
17		4016000054	* Bolt	2		WY010001-	M6X12
18		4012000356	* Nut	11		WY010001-	M6
19		4016000055	* Plug	8		WY010001-	d=13X11
20		4012000297	* Plug, Rubber	1		WY010001-	
21		4016000056	* Plate (Lower)	1		WY010001-	
22		4016000057	* Bolt	4		WY010001-	M6X16
23		4016000058	* Plug	8		WY010001-	d=12X11.5
24		4012000367	* Plug, Rubber	4		WY010001-	
25		4016000059	* Harness	1		WY010001-	
26		4016000060	* Band, Cable	6		WY010001-	4.8X200
27		4012000185	* Washer Toothed	2		WY010001-	M6
28		4012000303	* Nut	1		WY010001-	M6
29		4016000061	* Light	1		WY010001-	
30		4016000062	* Cover, Audio	1		WY010001-	
31		4016000063	* Clip	4		WY010001-	
32		4012000274	* Cover	1		WY010001-	
33		4012000314	* Antenna	1		WY010001-	
34		4012000316	* Cable, Antenna	1		WY010001-	L=2300
35		4016000064	* Plug	1		WY010001-	
36		4016000065	* Bracket	1		WY010001-	
37		4016000066	* Gasket	1		WY010001-	
38		4012000251	* Frame, Side Switch	2		WY010001-	
39		4012000252	* Frame, Central Switch	2		WY010001-	
40		4012000250	* Switch, Wiper	1		WY010001-	
41		4012000254	* Label	1		WY010001-	
42		4012000255	* Cap	3		WY010001-	
43		4012000256	* Tank	1		WY010001-	
44		4016000067	* Bracket	1		WY010001-	
45		4012000216	* Valve, Connection	1		WY010001-	
46		4012000245	* Atomizer	1		WY010001-	
47		4016000068	* Pipe	1		WY010001-	L=2550

https://truckmanualshub.com/

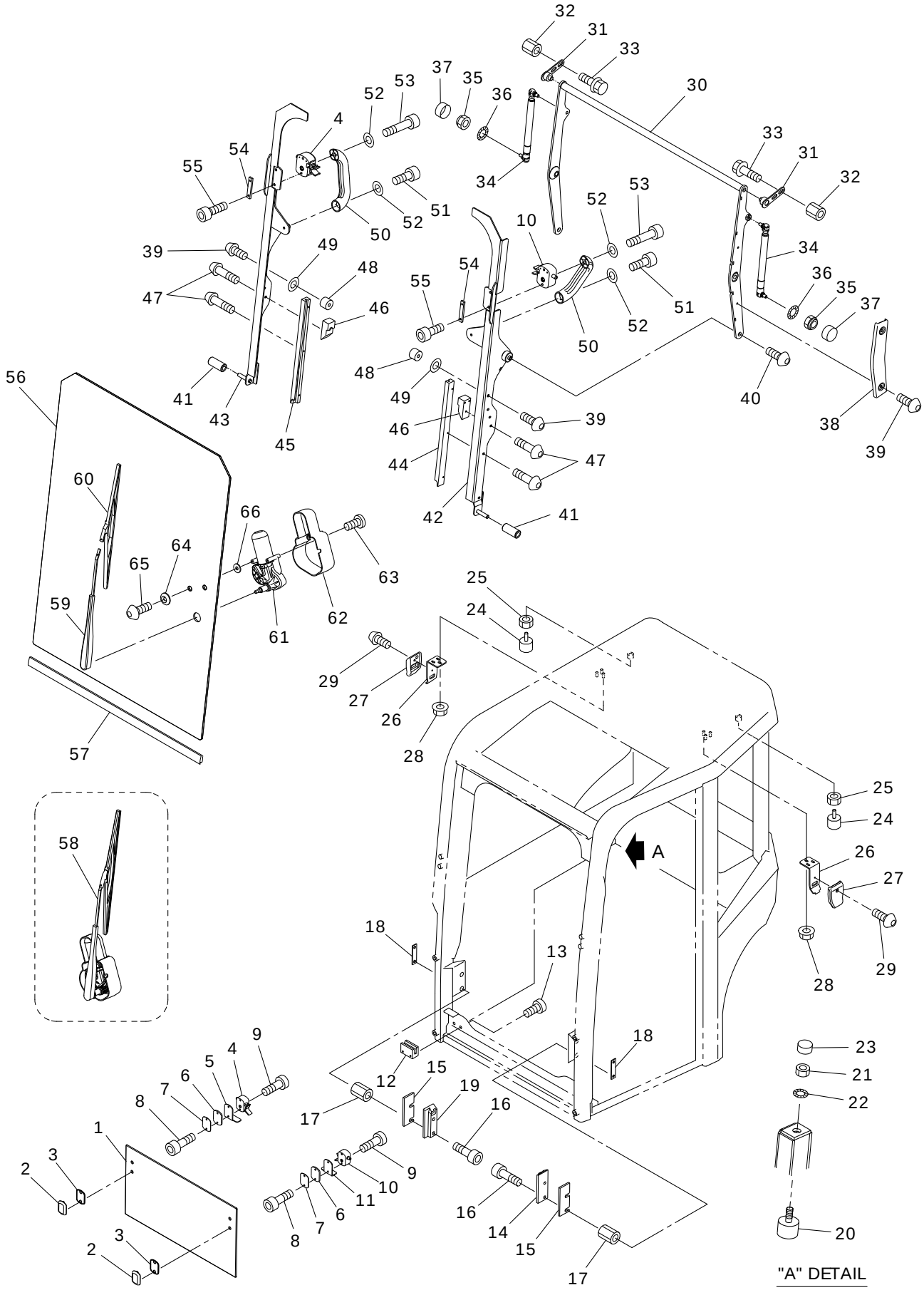

V4ALL-150800-1

https://truckmanualshub.com/

KEY No.	SUP.	PART No.	DESCRIPTION	Q'TY	CHAN.	SERIAL No.	REMARKS
0	×	3034212018	Cabin Ass'y (Dark Grey)	1		WY010001-	
0-1	×	3034212019	Cabin Ass'y (Light Grey)	1		WY010001-	
1		4016000069	* Glass	1		WY010001-	
2		4016000070	* Lock, Cover	2		WY010001-	
3		4016000071	* Gasket	2		WY010001-	
4		4016000072	* Lock (R.H.)	2		WY010001-	
5		4016000073	* Handle (R.H.)	1		WY010001-	
6		4016000074	* Spacer	2		WY010001-	
7		4016000075	* Gasket	2		WY010001-	
8		4016000076	* Bolt	4		WY010001-	M6X25
9		4016000077	* Bolt	2		WY010001-	M8X25
10		4016000078	* Lock (L.H.)	2		WY010001-	
11		4016000079	* Handle (L.H.)	1		WY010001-	
12		4016000080	* Shoe (Lower)	2		WY010001-	
13		4016000081	* Bolt	4		WY010001-	M8X20
14		4016000082	* Shoe (L.H.)	1		WY010001-	
15		4016000083	* Spacer	2		WY010001-	
16		4016000084	* Bolt	4		WY010001-	M8X35
17		4012000370	* Nut	4		WY010001-	M8
18		4016000085	* Bracket	2		WY010001-	
19		4016000086	* Shoe (R.H.)	1		WY010001-	
20		4016000087	* Stopper, Rubber	2		WY010001-	M6X15 H=15
21		4012000186	* Nut	2		WY010001-	M6
22		4012000185	* Washer Toothed	2		WY010001-	M6
23		4012000240	* Cap	2		WY010001-	M6
24		4016000088	* Stopper, Rubber	2		WY010001-	M6X18 H=20
25		4016000089	* Nut, Lock	2		WY010001-	M6
26		4016000090	* Bracket	2		WY010001-	
27		4016000091	* Protection, Door	2		WY010001-	
28		4016000029	* Nut, Special	6		WY010001-	M8
29		4016000033	* Bolt	2		WY010001-	M6X16
30		4016000092	* Frame, Door	1		WY010001-	
31		4016000093	* Bracket	2		WY010001-	
32		4016000094	* Nut	4		WY010001-	M8
33		4016000095	* Bolt	4		WY010001-	M8X20
34		4016000096	* Spring, Gas	2		WY010001-	400N-M8
35		4015000091	* Nut, Lock	2		WY010001-	M8
36		4012000428	* Washer, Special	4		WY010001-	M8
37		4012000206	* Cap	2		WY010001-	M8
38		4016000097	* Cover	1		WY010001-	
39		4016000054	* Bolt	4		WY010001-	M6X12
40		4016000098	* Bolt	2		WY010001-	M8X25
41		4016000099	* Bushing	2		WY010001-	
42		4016000100	* Frame (L.H.)	1		WY010001-	
43		4016000101	* Frame (R.H.)	1		WY010001-	
44		4016000102	* Guide (L.H.)	1		WY010001-	
45		4016000103	* Guide (R.H.)	1		WY010001-	
46		4016000104	* Shoe	2		WY010001-	
47		4013001450	* Bolt	10		WY010001-	M5X16
48		4016000105	* Stopper, Rubber	2		WY010001-	M6 H=15
49		4012000215	* Washer Flat	2		WY010001-	
50		4016000106	* Handle	2		WY010001-	

https://truckmanualshub.com/

KEY No.	SUP.	PART No.	DESCRIPTION	Q'TY	CHAN.	SERIAL No.	REMARKS
51		4016000107	* Bolt	2		WY010001-	M8X20
52		4012000189	* Washer Flat	4		WY010001-	M8
53		4016000108	* Bolt	2		WY010001-	M8X40
54		4016000109	* Bracket	2		WY010001-	
55		4016000110	* Bolt	4		WY010001-	M6X14
56		4016000111	* Glass	1		WY010001-	
57		4016000112	* Gasket	1		WY010001-	L=775
58		4016000113	* Wiper	1		WY010001-	
59		4013001438	** Arm, Wiper	1		WY010001-	
60		4013001437	** Blade, Wiper	1		WY010001-	L=400
61		4016000114	** Motor, Wiper	1		WY010001-	
62		4012000352	** Cover, Motor	1		WY010001-	
63		4016000033	* Bolt	2		WY010001-	M6X16
64		4012000210	* Washer, Nylon	2		WY010001-	d=19.5
65		4016000115	* Bolt	2		WY010001-	M6X25
66		4016000116	* Washer, Special	2		WY010001-	d=6.5X18

https://truckmanualshub.com/

[Memo]

https://truckmanualshub.com/

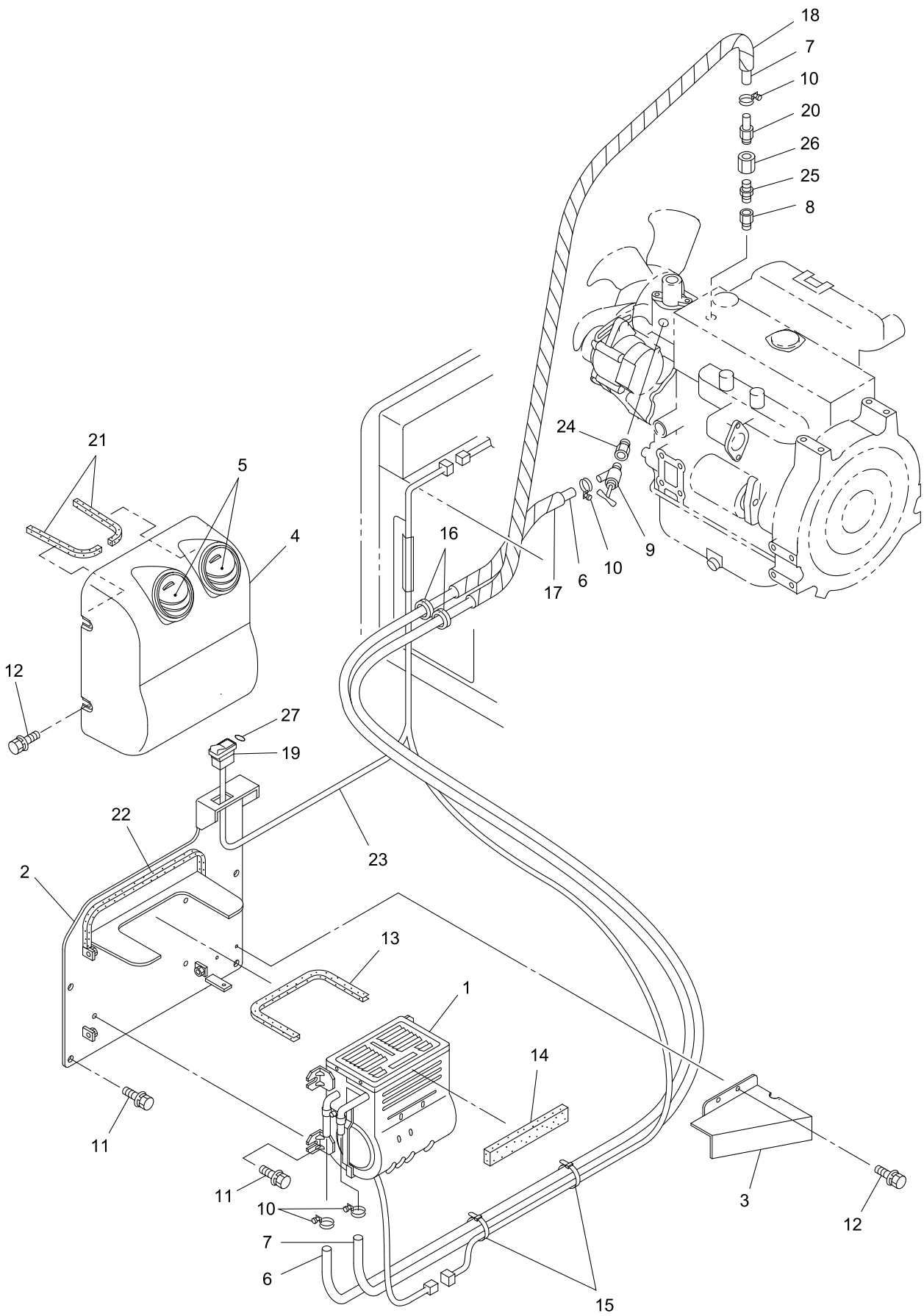

40V4-150900-1

https://truckmanualshub.com/

KEY No.	SUP.	PART No.	DESCRIPTION	Q'TY	CHAN.	SERIAL No.	REMARKS
0	×	F355 231 00	Heater Ass'y, Car	1		WY010001-	
1		0857 056 03	* Heater, Car	1		WY010001-	
2		D419 472 00	* Bracket	1		WY010001-	
3		D458 149 00	* Cover	1		WY010001-	
4		D465 358 00	* Panel	1		WY010001-	
5		0820 023 16	* Duct	2		WY010001-	
6		4070 102 40	* Hose, Water	M		WY010001-	L=1030
7		4070 102 41	* Hose, Water	M		WY010001-	L=1400
8		0710 503 02	* Socket	1		WY010001-	
9		0729 910 35	* Valve	1		WY010001-	
10		0690 083 05	* Clamp, Hose	4		WY010001-	17～25
11		0518 100 20	* Bolt, Treatment (W/L.W, F.W)	8		WY010001-	M10X20 P=1.25
12		0438 060 16	* Bolt, Treatment (W/L.W, F.W)	6		WY010001-	M6X16
13		4550 726 00	* Seal	M		WY010001-	L=400
14		D493 439 01	* Panel, Sponge	1		WY010001-	
15		0820 067 05	* Band, Cable	2		WY010001-	
16		0910 942 02	* Grommet	2		WY010001-	
17		0820 803 06	* Tube, Corrugate	M		WY010001-	L=200
18		0820 803 06	* Tube, Corrugate	M		WY010001-	L=600
19		0858 314 34	* Switch Ass'y, Heater	1		WY010001-	
20		4072 220 00	* Nipple	1		WY010001-	
21		D493 626 00	* Panel, Sponge	2		WY010001-	
22		D493 732 00	* Panel, Sponge	1		WY010001-	
23		D592 309 00	* Harness	1		WY010001-	
24		0710 503 03	* Socket	1		WY010001-	
25		0710 600 13	* Nipple, Reducing	1		WY010001-	
26		0710 501 03	* Socket	1		WY010001-	
27		D407 820 00	* Decal	1		WY010001-	

https://truckmanualshub.com/

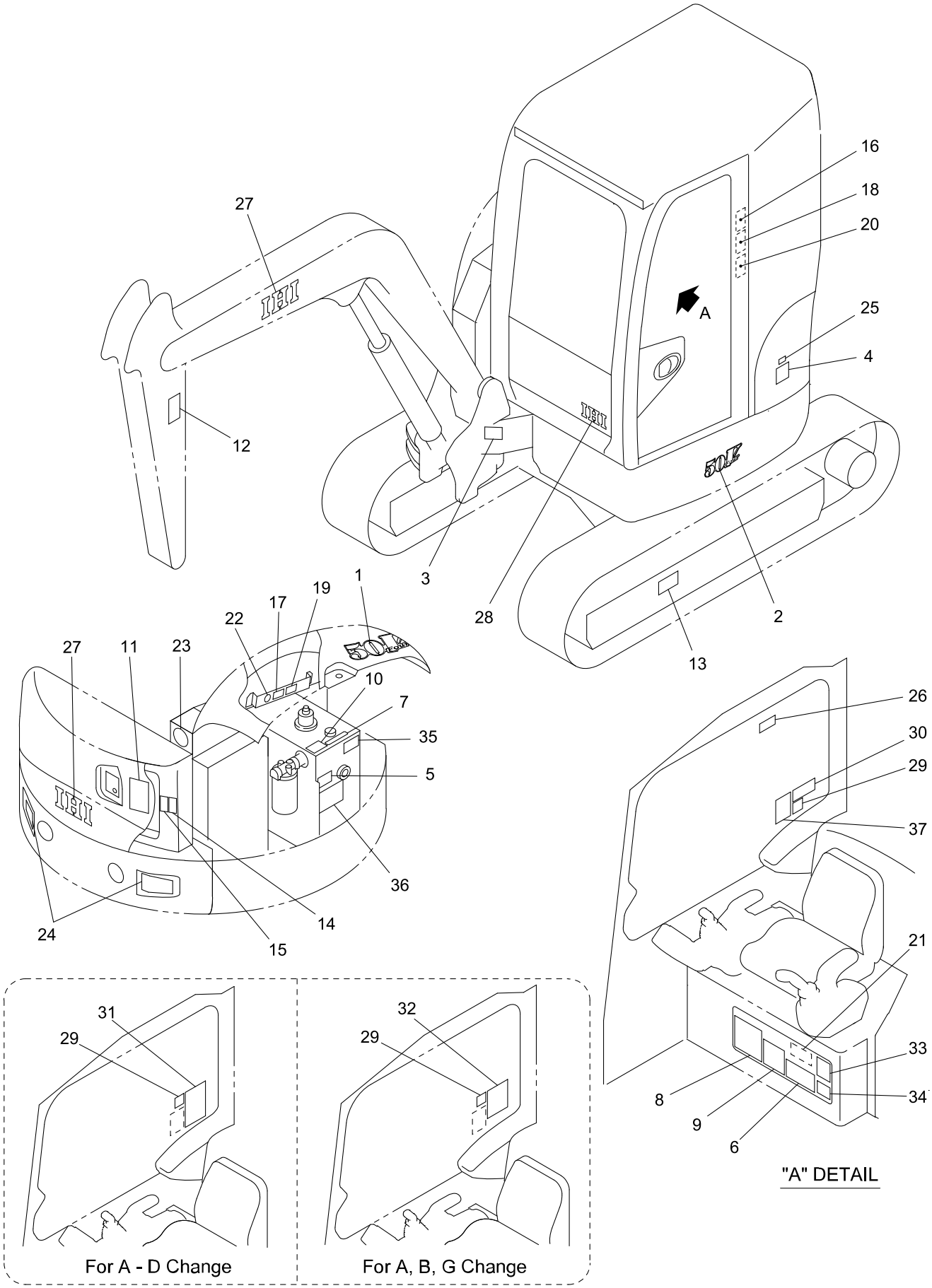

50V4-151000-1

IHI

NAME PLATE ASS'Y (FOR JAPANESE)

MODEL 55V4

SHEET No 15-10

https://truckmanualshub.com/

KEY No.	SUP.	PART No.	DESCRIPTION	Q'TY	CHAN.	SERIAL No.	REMARKS
0	×	F377 852 00	Decal Ass'y	1		WY010001-	
0-1	×	F377 855 00	Decal Ass'y	1		WY010001-	
0-2	×	F377 856 00	Decal Ass'y	1		WY010001-	
1		D408 408 00	* Decal (Model)	1		WY010001-	
2		D408 417 00	* Decal (Model)	1		WY010001-	
3	×	D405 094 00	* Decal (Serial No.)	1		WY010001-	
3-1		0497 035 00	* Screw, Drive	4		WY010001-	d=3
4		D408 324 00	* Decal (Oil)	1		WY010001-	
5		D406 490 00	* Decal (Oil Check)	1		WY010001-	
6		D408 313 00	* Decal (Lub. Chart)	1		WY010001-	
7		4447 479 00	* Decal (Oil)	1		WY010001-	
8		D408 325 00	* Decal (Engine Daily Check)	1		WY010001-	
9		D406 597 00	* Decal (Safety Works)	1		WY010001-	
10		D408 328 00	* Decal (Tank Decompression)	1		WY010001-	
11		D405 450 00	* Decal (Safety Swing)	1		WY010001-	
12		D405 454 00	* Decal (Caution)	2		WY010001-	
13		D405 455 00	* Decal (Caution)	2		WY010001-	
14		D405 424 00	* Decal (Caution)	1		WY010001-	
15		D405 452 00	* Decal (Caution)	1		WY010001-	
16		D405 332 00	* Decal (Caution)	1		WY010001-	
17		D405 462 00	* Decal (Caution)	1		WY010001-	
18		D405 451 00	* Decal (Caution)	1		WY010001-	
19		D405 463 00	* Decal (Caution)	1		WY010001-	
20		D405 449 00	* Decal (Caution)	1		WY010001-	
21		D405 373 00	* Decal (Caution)	1		WY010001-	
22		4407 035 00	* Decal (Anti-Freezing Solution)	1		WY010001-	
23		D406 631 00	* Decal (Environment)	1		WY010001-	
24		D408 371 00	* Decal (Reflector)	2		WY010001-	
25		D407 943 00	* Decal (EPA Regulation)	1		WY010001-	
26		D405 453 00	* Decal (Caution)	1		WY010001-	
27		D408 402 00	* Decal (IHI)	3		WY010001-	
28		D408 403 00	* Decal (IHI)	1		WY010001-	
29		D406 630 00	* Decal (Blade, Pedal)	1		WY010001-	
30		D406 622 00	* Decal (Control A)	1		WY010001-	
30-1		D406 623 00	* Decal (Control B)	1		WY010001-	
30-2		D406 624 00	* Decal (Control C)	1		WY010001-	
30-3		D406 625 00	* Decal (Control D)	1		WY010001-	
30-4		D406 627 00	* Decal (Control G)	1		WY010001-	
31		D406 628 00	* Decal (Control A-D)	1		WY010001-	
32		D406 629 00	* Decal (Control A, B, G)	1		WY010001-	
33		D408 318 00	* Decal (Specification)	1		WY010001-	
34		D408 229 00	* Decal (Bucket Specification)	1		WY010001-	
35		4447 874 00	* Decal (Spare Piping Change)	1		WY010001-	
36		4447 653 00	* Decal (Breaker Cation)	1		WY010001-	
37		D407 056 00	* Decal (Spare Pedal)	1		WY010001-	

https://truckmanualshub.com/

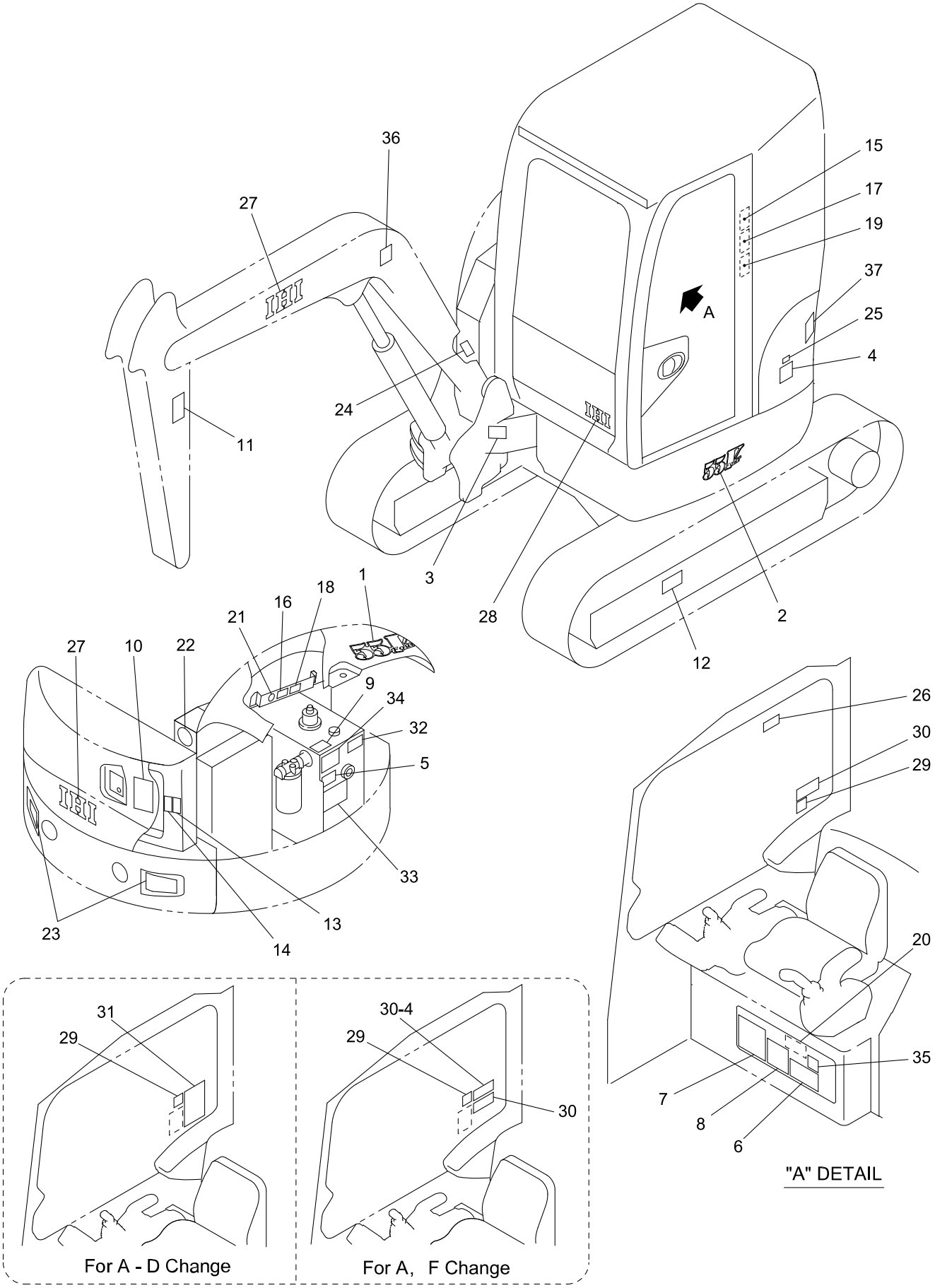

50V4-15100A-1

https://truckmanualshub.com/

KEY No.	SUP.	PART No.	DESCRIPTION	Q'TY	CHAN.	SERIAL No.	REMARKS
0	×	F377 852 00	Decal Ass'y	1		WY010001-	
0-1	×	F377 855 00	Decal Ass'y	1		WY010001-	
1		D408 412 00	* Decal (Model)	1		WY010001-	
2		D408 421 00	* Decal (Model)	1		WY010001-	
3	×	D405 094 00	* Decal (Serial No.)	1		WY010001-	
3-1	×	D405 091 00	* Decal (Serial No.) (CE)	1		WY010001-	
3-2		0497 035 00	* Screw, Drive	4		WY010001-	d=3
4		4407 974 00	* Decal (Oil)	1		WY010001-	
5		D406 504 00	* Decal (Oil Check)	1		WY010001-	
6		D408 355 00	* Decal (Lub. Chart)	1		WY010001-	
7		D408 326 00	* Decal (Engine Daily Check)	1		WY010001-	
8		4406 458 00	* Decal (Safety Works)	1		WY010001-	
9		D408 424 00	* Decal (Tank Decompression)	1		WY010001-	
10		D405 507 00	* Decal (Safety Swing)	1		WY010001-	
11		D405 511 00	* Decal (Caution)	2		WY010001-	
12		D405 505 00	* Decal (Caution)	2		WY010001-	
13		D405 366 00	* Decal (Caution)	1		WY010001-	
14		D405 509 00	* Decal (Caution)	1		WY010001-	
15		D405 359 00	* Decal (Caution)	1		WY010001-	
16		D405 503 00	* Decal (Caution)	1		WY010001-	
17		D405 508 00	* Decal (Caution)	1		WY010001-	
18		D405 504 00	* Decal (Caution)	1		WY010001-	
19		D405 506 00	* Decal (Caution)	1		WY010001-	
20		D405 323 00	* Decal (Caution)	1		WY010001-	
21		4407 035 00	* Decal (Anti-Freezing Solution)	1		WY010001-	
22		D406 783 00	* Decal (Environment)	1		WY010001-	
23		D408 371 00	* Decal (Reflector)	2		WY010001-	
24	×	D405 097 00	* Decal (New Machine)	1		WY010001-	
25		D407 943 00	* Decal (EPA Regulation)	1		WY010001-	
26		D405 510 00	* Decal (Caution)	1		WY010001-	
27		D408 402 00	* Decal (IHI)	3		WY010001-	
28		D408 403 00	* Decal (IHI)	1		WY010001-	
29		D406 630 00	* Decal (Blade, Pedal)	1		WY010001-	
30		D406 622 00	* Decal (Control A)	1		WY010001-	
30-1		D406 623 00	* Decal (Control B)	1		WY010001-	
30-2		D406 624 00	* Decal (Control C)	1		WY010001-	
30-3		D406 625 00	* Decal (Control D)	1		WY010001-	
30-4		D406 626 00	* Decal (Control F)	1		WY010001-	
31		D406 628 00	* Decal (Control A-D)	1		WY010001-	
32		4448 651 00	* Decal (Spare Piping Change)	1		WY010001-	
33		4447 857 00	* Decal (Breaker Cation)	1		WY010001-	
34		D408 322 00	* Decal (Boom Lowering)(CE)	1		WY010001-	
35		4448 474 00	* Decal (Transport Fix)(CE)	1		WY010001-	
36		D408 347 00	* Decal (Lifting Procedures)(CE)	1		WY010001-	
37		D406 032 00	* Decal (Noise 97)(CE)	1		WY010001-	

https://truckmanualshub.com/

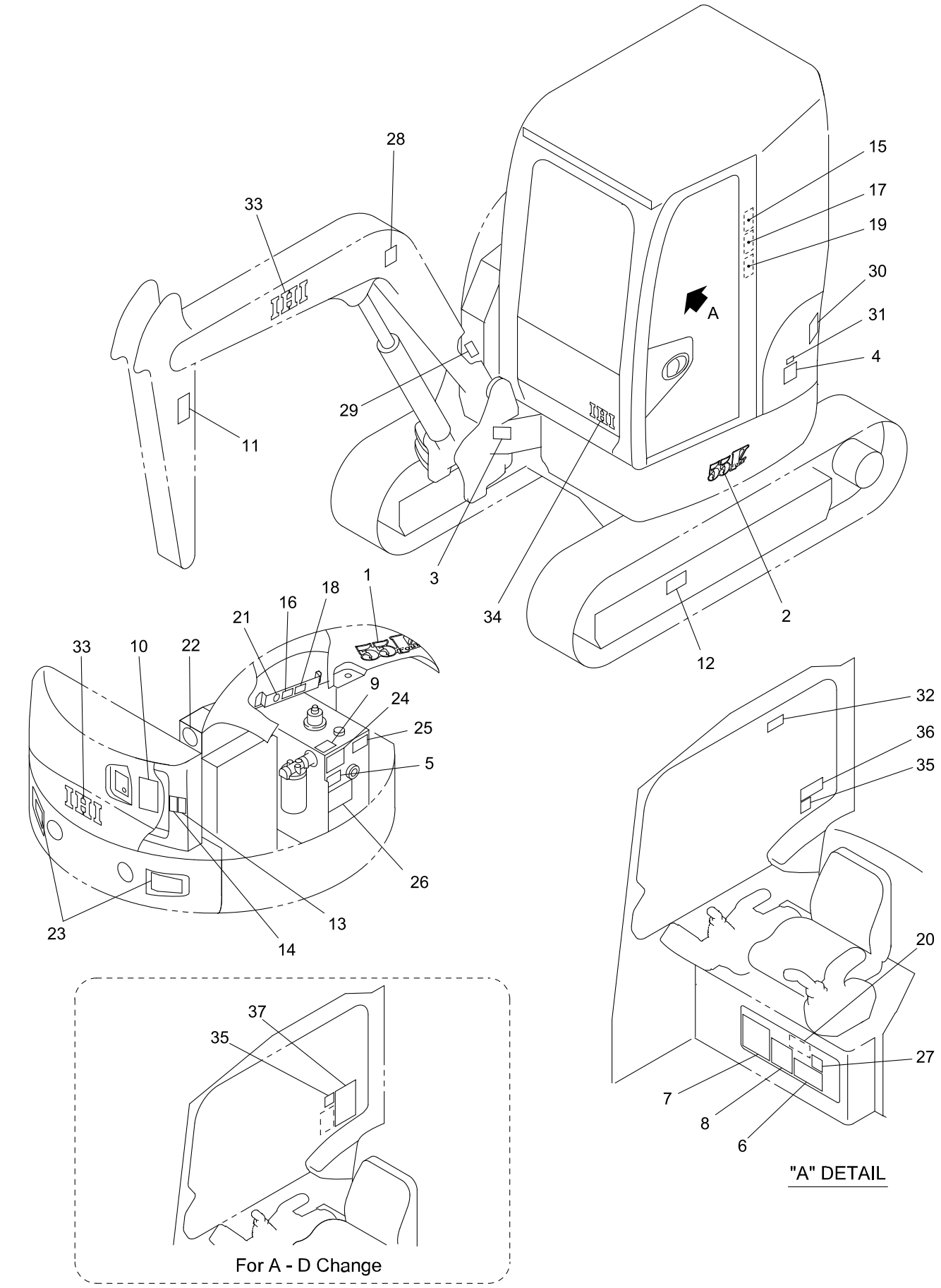

50V4-15100B-1

https://truckmanualshub.com/

KEY No.	SUP.	PART No.	DESCRIPTION	Q'TY	CHAN.	SERIAL No.	REMARKS
0	×	F377 852 00	Decal Ass'y	1		WY010001-	
0-1	×	F377 855 00	Decal Ass'y	1		WY010001-	
1		D408 412 00	* Decal (Model)	1		WY010001-	
2		D408 421 00	* Decal (Model)	1		WY010001-	
3	×	D405 091 00	* Decal (Serial No.)	1		WY010001-	
3-1		0497 035 00	* Screw, Drive	4		WY010001-	d=3
4		4405 457 00	* Decal (Oil)	1		WY010001-	
5		D406 558 00	* Decal (Oil Check)	1		WY010001-	
6		D408 360 00	* Decal (Lub. Chart)	1		WY010001-	
7		D408 332 00	* Decal (Engine Daily Check)	1		WY010001-	
8		4448 584 00	* Decal (Safety Works)	1		WY010001-	
9		D408 429 00	* Decal (Tank Decompression)	1		WY010001-	
10		D405 507 00	* Decal (Safety Swing)	1		WY010001-	
11		D405 511 00	* Decal (Caution)	2		WY010001-	
12		D405 505 00	* Decal (Caution)	2		WY010001-	
13		D405 366 00	* Decal (Caution)	1		WY010001-	
14		D405 509 00	* Decal (Caution)	1		WY010001-	
15		D405 359 00	* Decal (Caution)	1		WY010001-	
16		D405 503 00	* Decal (Caution)	1		WY010001-	
17		D405 508 00	* Decal (Caution)	1		WY010001-	
18		D405 504 00	* Decal (Caution)	1		WY010001-	
19		D405 506 00	* Decal (Caution)	1		WY010001-	
20		D405 559 00	* Decal (Caution)	1		WY010001-	
21		4448 573 00	* Decal (Anti-Freezing Solution)	1		WY010001-	
22		D406 783 00	* Decal (Environment)	1		WY010001-	
23		D408 371 00	* Decal (Reflector)	2		WY010001-	
24		D408 338 00	* Decal (Boom Lowering)	1		WY010001-	
25		4449 003 00	* Decal (Spare Piping Change)	1		WY010001-	
26		4448 587 00	* Decal (Breaker Cation)	1		WY010001-	
27		4448 562 00	* Decal (Transport Fix)	1		WY010001-	
28		D408 352 00	* Decal (Lifting Procedures)	1		WY010001-	
29	×	D405 097 00	* Decal (New Machine)	1		WY010001-	
30		D406 032 00	* Decal (Noise 97)	1		WY010001-	
31		D407 943 00	* Decal (EPA Regulation)	1		WY010001-	
32		D405 510 00	* Decal (Caution)	1		WY010001-	
33		D408 402 00	* Decal (IHI)	3		WY010001-	
34		D408 403 00	* Decal (IHI)	1		WY010001-	
35		D406 630 00	* Decal (Blade, Pedal)	1		WY010001-	
36		D406 622 00	* Decal (Control A)	1		WY010001-	
36-1		D406 623 00	* Decal (Control B)	1		WY010001-	
36-2		D406 624 00	* Decal (Control C)	1		WY010001-	
36-3		D406 625 00	* Decal (Control D)	1		WY010001-	
37		D406 628 00	* Decal (Control A-D)	1		WY010001-	

https://truckmanualshub.com/

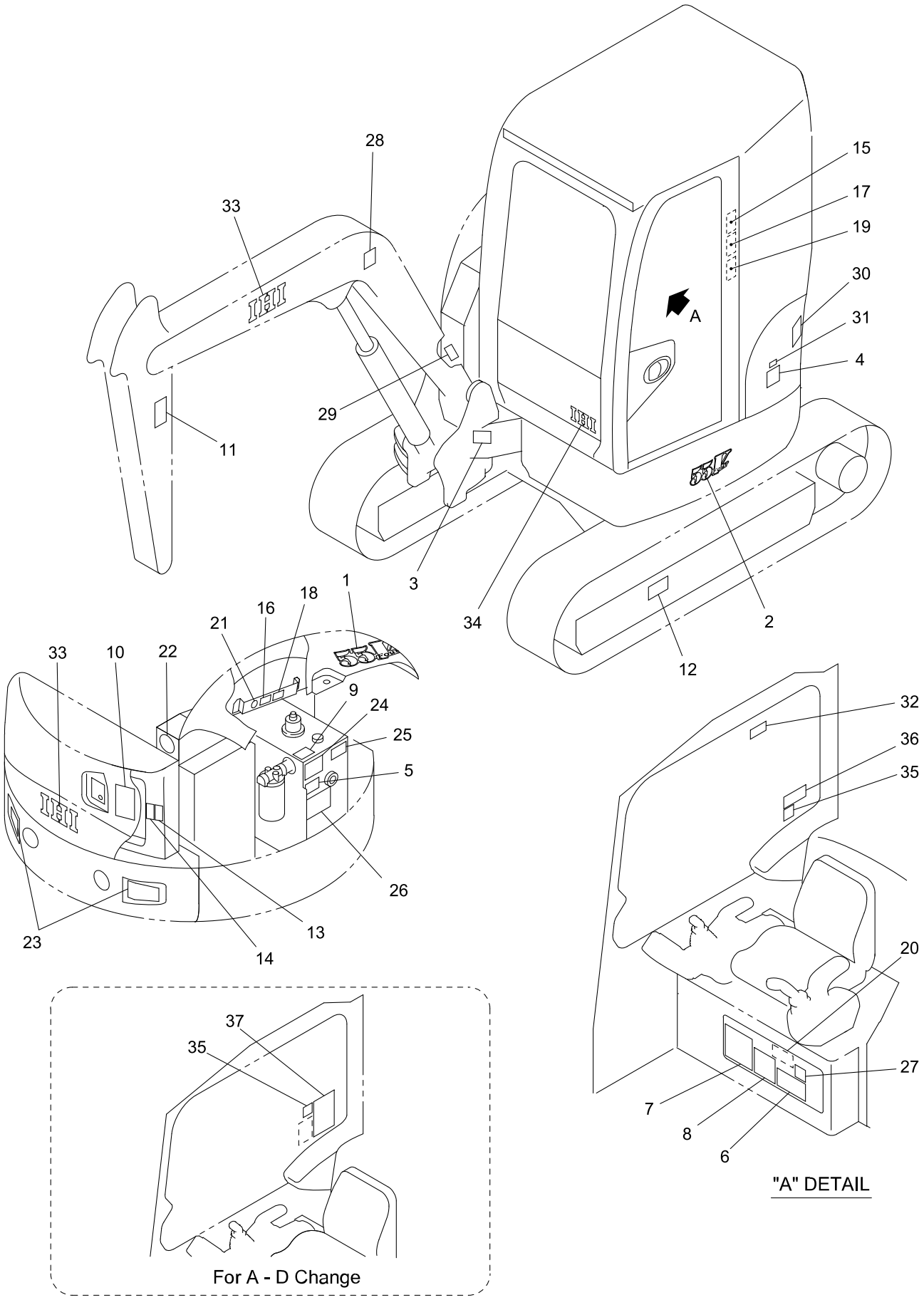

50V4-15100B-1

15

IHI

NAME PLATE ASS'Y (FOR FRENCH)

MODEL 55V4

SHEET No 15-10[C]

https://truckmanualshub.com/

KEY No.	SUP.	PART No.	DESCRIPTION	Q'TY	CHAN.	SERIAL No.	REMARKS
0	×	F377 852 00	Decal Ass'y	1		WY010001-	
0-1	×	F377 855 00	Decal Ass'y	1		WY010001-	
1		D408 412 00	* Decal (Model)	1		WY010001-	
2		D408 421 00	* Decal (Model)	1		WY010001-	
3	×	D405 091 00	* Decal (Serial No.)	1		WY010001-	
3-1		0497 035 00	* Screw, Drive	4		WY010001-	d=3
4		4407 974 00	* Decal (Oil)	1		WY010001-	
5		D406 554 00	* Decal (Oil Check)	1		WY010001-	
6		D408 356 00	* Decal (Lub. Chart)	1		WY010001-	
7		D408 327 00	* Decal (Engine Daily Check)	1		WY010001-	
8		4406 714 00	* Decal (Safety Works)	1		WY010001-	
9		D408 425 00	* Decal (Tank Decompression)	1		WY010001-	
10		D405 507 00	* Decal (Safety Swing)	1		WY010001-	
11		D405 511 00	* Decal (Caution)	2		WY010001-	
12		D405 505 00	* Decal (Caution)	2		WY010001-	
13		D405 366 00	* Decal (Caution)	1		WY010001-	
14		D405 509 00	* Decal (Caution)	1		WY010001-	
15		D405 359 00	* Decal (Caution)	1		WY010001-	
16		D405 503 00	* Decal (Caution)	1		WY010001-	
17		D405 508 00	* Decal (Caution)	1		WY010001-	
18		D405 504 00	* Decal (Caution)	1		WY010001-	
19		D405 506 00	* Decal (Caution)	1		WY010001-	
20		D405 575 00	* Decal (Caution)	1		WY010001-	
20-1		D408 436 00	* Decal (Capacities Table)	1		WY010001-	
21		4406 710 00	* Decal (Anti-Freezing Solution)	1		WY010001-	
22		D406 783 00	* Decal (Environment)	1		WY010001-	
23		D408 371 00	* Decal (Reflector)	2		WY010001-	
24		D408 334 00	* Decal (Boom Lowering)	1		WY010001-	
25		4448 687 00	* Decal (Spare Piping Change)	1		WY010001-	
26		4447 996 00	* Decal (Breaker Cation)	1		WY010001-	
27		4448 542 00	* Decal (Transport Fix)	1		WY010001-	
28		D408 348 00	* Decal (Lifting Procedures)	1		WY010001-	
29	×	D405 097 00	* Decal (New Machine)	1		WY010001-	
30		D406 032 00	* Decal (Noise 97)	1		WY010001-	
31		D407 943 00	* Decal (EPA Regulation)	1		WY010001-	
32		D405 510 00	* Decal (Caution)	1		WY010001-	
33		D408 402 00	* Decal (IHI)	3		WY010001-	
34		D408 403 00	* Decal (IHI)	1		WY010001-	
35		D406 630 00	* Decal (Blade, Pedal)	1		WY010001-	
36		D406 622 00	* Decal (Control A)	1		WY010001-	
36-1		D406 623 00	* Decal (Control B)	1		WY010001-	
36-2		D406 624 00	* Decal (Control C)	1		WY010001-	
36-3		D406 625 00	* Decal (Control D)	1		WY010001-	
37		D406 628 00	* Decal (Control A-D)	1		WY010001-	

https://truckmanualshub.com/

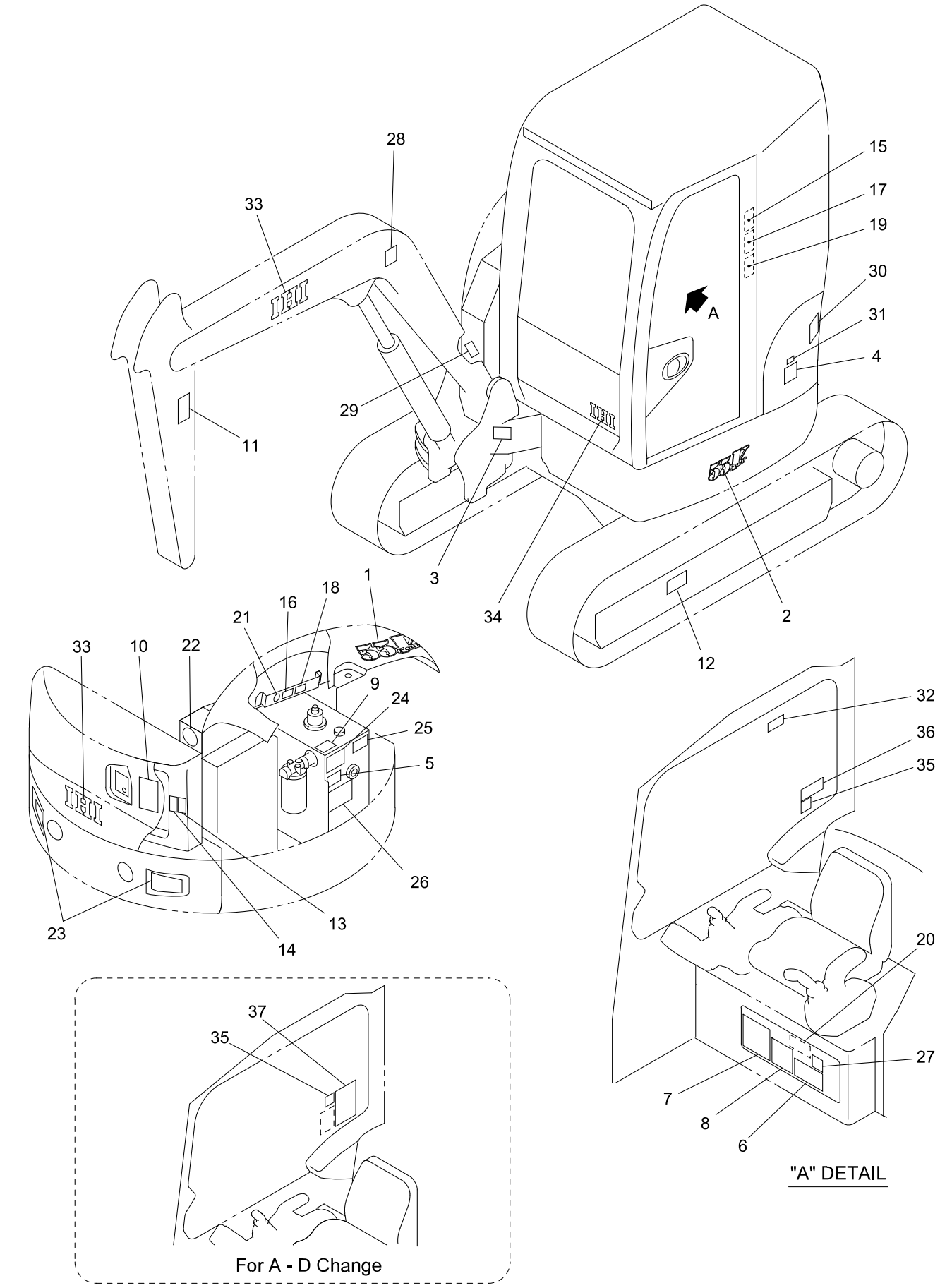

50V4-15100B-1

https://truckmanualshub.com/

KEY No.	SUP.	PART No.	DESCRIPTION	Q'TY	CHAN.	SERIAL No.	REMARKS
0	×	F377 852 00	Decal Ass'y	1		WY010001-	
0-1	×	F377 855 00	Decal Ass'y	1		WY010001-	
1		D408 412 00	* Decal (Model)	1		WY010001-	
2		D408 421 00	* Decal (Model)	1		WY010001-	
3	×	D405 091 00	* Decal (Serial No.)	1		WY010001-	
3-1		0497 035 00	* Screw, Drive	4		WY010001-	d=3
4		4405 457 00	* Decal (Oil)	1		WY010001-	
5		D406 550 00	* Decal (Oil Check)	1		WY010001-	
6		D408 357 00	* Decal (Lub. Chart)	1		WY010001-	
7		D408 329 00	* Decal (Engine Daily Check)	1		WY010001-	
8		4405 451 00	* Decal (Safety Works)	1		WY010001-	
9		D408 426 00	* Decal (Tank Decompression)	1		WY010001-	
10		D405 507 00	* Decal (Safety Swing)	1		WY010001-	
11		D405 511 00	* Decal (Caution)	2		WY010001-	
12		D405 505 00	* Decal (Caution)	2		WY010001-	
13		D405 366 00	* Decal (Caution)	1		WY010001-	
14		D405 509 00	* Decal (Caution)	1		WY010001-	
15		D405 359 00	* Decal (Caution)	1		WY010001-	
16		D405 503 00	* Decal (Caution)	1		WY010001-	
17		D405 508 00	* Decal (Caution)	1		WY010001-	
18		D405 504 00	* Decal (Caution)	1		WY010001-	
19		D405 506 00	* Decal (Caution)	1		WY010001-	
20		D405 571 00	* Decal (Caution)	1		WY010001-	
21		4405 456 00	* Decal (Anti-Freezing Solution)	1		WY010001-	
22		D406 783 00	* Decal (Environment)	1		WY010001-	
23		D408 371 00	* Decal (Reflector)	2		WY010001-	
24		D408 335 00	* Decal (Boom Lowering)	1		WY010001-	
25		4448 944 00	* Decal (Spare Piping Change)	1		WY010001-	
26		4447 925 00	* Decal (Breaker Cation)	1		WY010001-	
27		4448 511 00	* Decal (Transport Fix)	1		WY010001-	
28		D408 349 00	* Decal (Lifting Procedures)	1		WY010001-	
29	×	D405 097 00	* Decal (New Machine)	1		WY010001-	
30		D406 032 00	* Decal (Noise 97)	1		WY010001-	
31		D407 943 00	* Decal (EPA Regulation)	1		WY010001-	
32		D405 510 00	* Decal (Caution)	1		WY010001-	
33		D408 402 00	* Decal (IHI)	3		WY010001-	
34		D408 403 00	* Decal (IHI)	1		WY010001-	
35		D406 630 00	* Decal (Blade, Pedal)	1		WY010001-	
36		D406 622 00	* Decal (Control A)	1		WY010001-	
36-1		D406 623 00	* Decal (Control B)	1		WY010001-	
36-2		D406 624 00	* Decal (Control C)	1		WY010001-	
36-3		D406 625 00	* Decal (Control D)	1		WY010001-	
37		D406 628 00	* Decal (Control A-D)	1		WY010001-	

https://truckmanualshub.com/

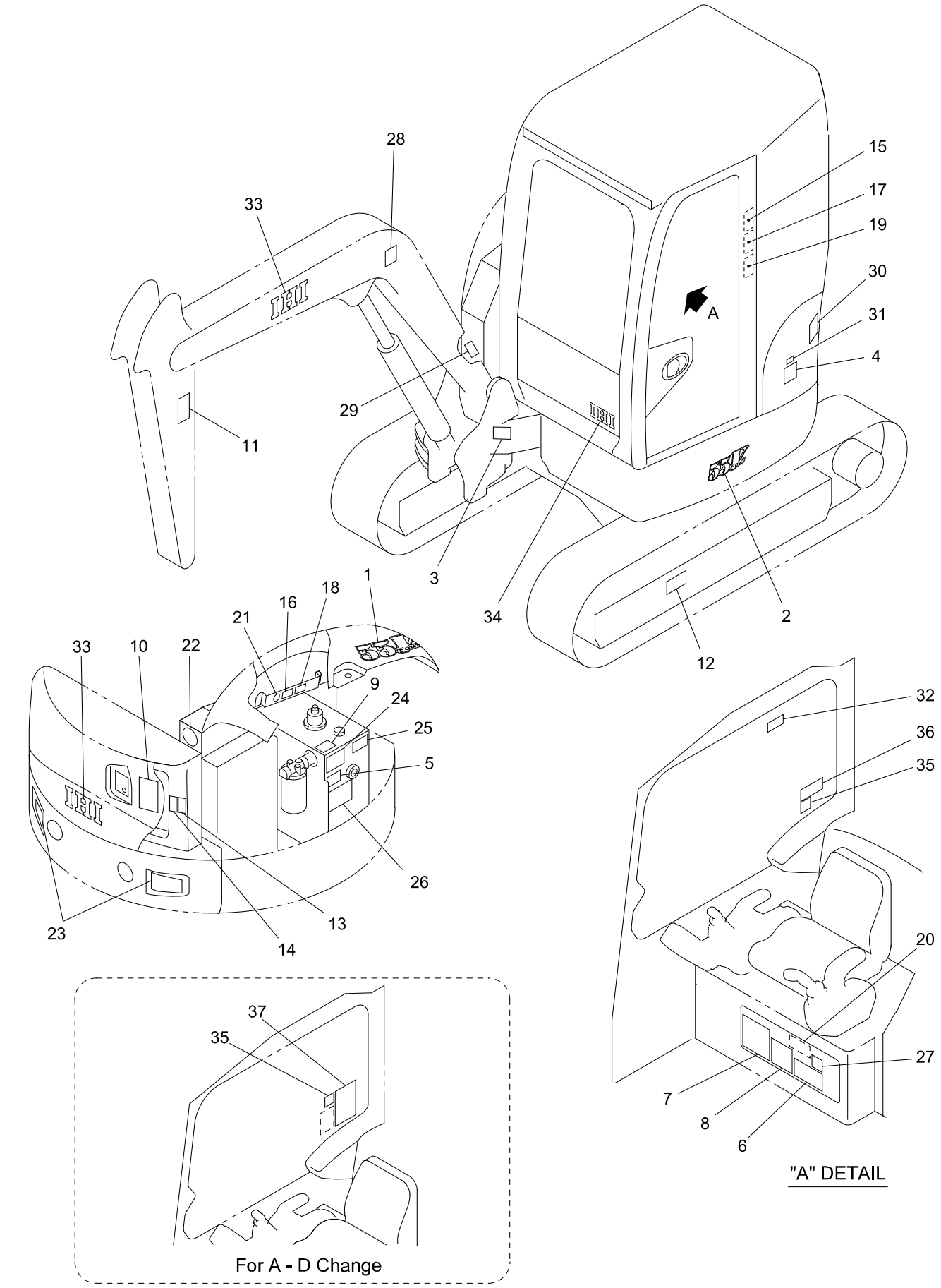

50V4-15100B-1

15

IHI

NAME PLATE ASS'Y (FOR GERMAN)

MODEL 55V4

SHEET No 15-10[E]

https://truckmanualshub.com/

KEY No.	SUP.	PART No.	DESCRIPTION	Q'TY	CHAN.	SERIAL No.	REMARKS
0	×	F377 852 00	Decal Ass'y	1		WY010001-	
0-1	×	F377 855 00	Decal Ass'y	1		WY010001-	
1		D408 412 00	* Decal (Model)	1		WY010001-	
2		D408 421 00	* Decal (Model)	1		WY010001-	
3	×	D405 091 00	* Decal (Serial No.)	1		WY010001-	
3-1		0497 035 00	* Screw, Drive	4		WY010001-	d=3
4		4405 457 00	* Decal (Oil)	1		WY010001-	
5		D406 565 00	* Decal (Oil Check)	1		WY010001-	
6		D408 358 00	* Decal (Lub. Chart)	1		WY010001-	
7		D408 330 00	* Decal (Engine Daily Check)	1		WY010001-	
8		D407 017 00	* Decal (Safety Works)	1		WY010001-	
9		D408 427 00	* Decal (Tank Decompression)	1		WY010001-	
10		D405 507 00	* Decal (Safety Swing)	1		WY010001-	
11		D405 511 00	* Decal (Caution)	2		WY010001-	
12		D405 505 00	* Decal (Caution)	2		WY010001-	
13		D405 366 00	* Decal (Caution)	1		WY010001-	
14		D405 509 00	* Decal (Caution)	1		WY010001-	
15		D405 359 00	* Decal (Caution)	1		WY010001-	
16		D405 503 00	* Decal (Caution)	1		WY010001-	
17		D405 508 00	* Decal (Caution)	1		WY010001-	
18		D405 504 00	* Decal (Caution)	1		WY010001-	
19		D405 506 00	* Decal (Caution)	1		WY010001-	
20		D405 587 00	* Decal (Caution)	1		WY010001-	
21		4447 229 00	* Decal (Anti-Freezing Solution)	1		WY010001-	
22		D406 783 00	* Decal (Environment)	1		WY010001-	
23		D408 371 00	* Decal (Reflector)	2		WY010001-	
24		D408 336 00	* Decal (Boom Lowering)	1		WY010001-	
25		D405 256 00	* Decal (Spare Piping Change)	1		WY010001-	
26		4448 350 00	* Decal (Breaker Cation)	1		WY010001-	
27		D405 059 00	* Decal (Transport Fix)	1		WY010001-	
28		D408 350 00	* Decal (Lifting Procedures)	1		WY010001-	
29	×	D405 097 00	* Decal (New Machine)	1		WY010001-	
30		D406 032 00	* Decal (Noise 97)	1		WY010001-	
31		D407 943 00	* Decal (EPA Regulation)	1		WY010001-	
32		D405 510 00	* Decal (Caution)	1		WY010001-	
33		D408 402 00	* Decal (IHI)	3		WY010001-	
34		D408 403 00	* Decal (IHI)	1		WY010001-	
35		D406 630 00	* Decal (Blade, Pedal)	1		WY010001-	
36		D406 622 00	* Decal (Control A)	1		WY010001-	
36-1		D406 623 00	* Decal (Control B)	1		WY010001-	
36-2		D406 624 00	* Decal (Control C)	1		WY010001-	
36-3		D406 625 00	* Decal (Control D)	1		WY010001-	
37		D406 628 00	* Decal (Control A-D)	1		WY010001-	

https://truckmanualshub.com/

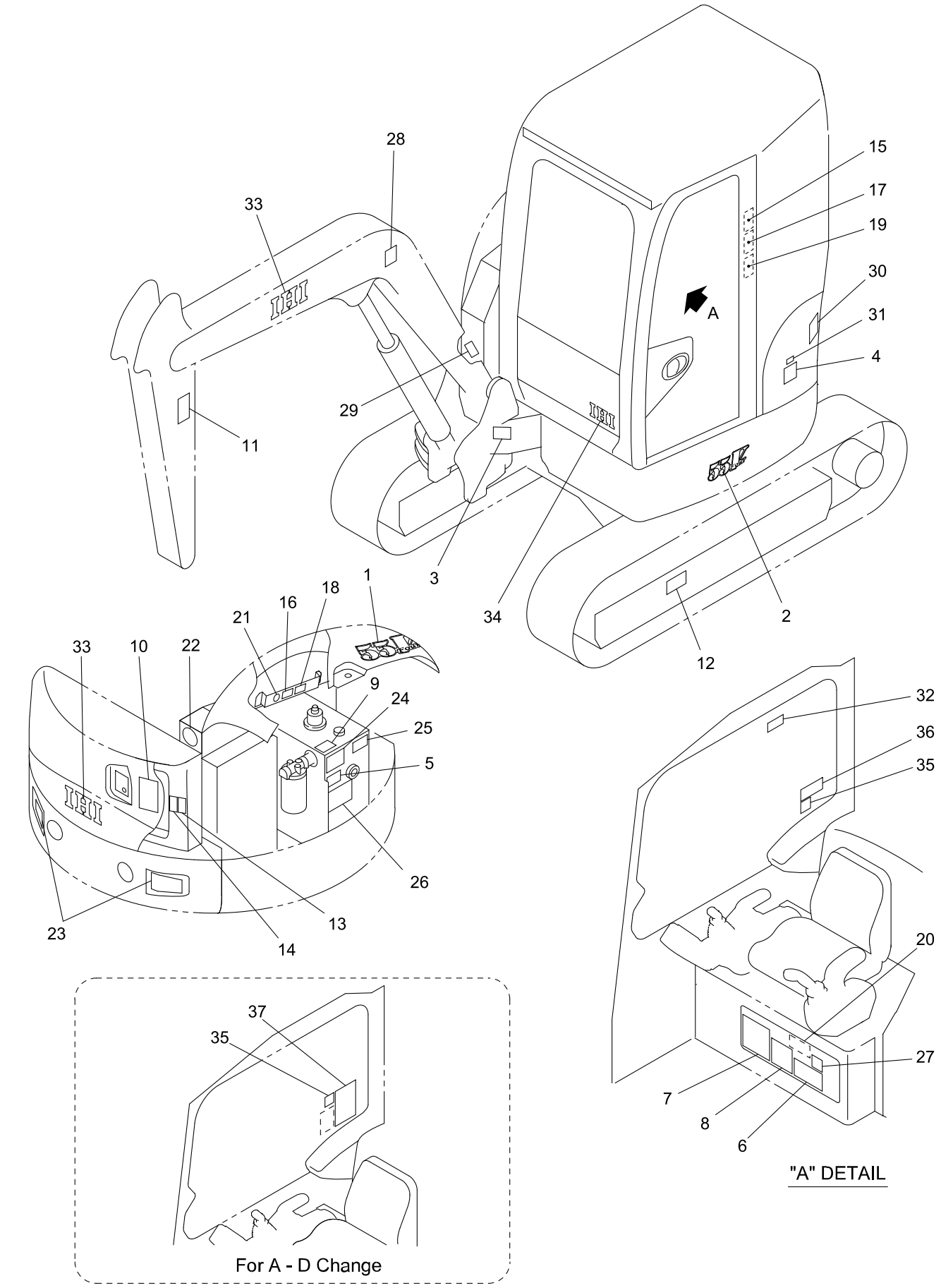

50V4-15100B-1

15

IHI

NAME PLATE ASS'Y (FOR DANISH)

MODEL 55V4

SHEET No 15-10[F]

https://truckmanualshub.com/

KEY No.	SUP.	PART No.	DESCRIPTION	Q'TY	CHAN.	SERIAL No.	REMARKS
0	×	F377 852 00	Decal Ass'y	1		WY010001-	
0-1	×	F377 855 00	Decal Ass'y	1		WY010001-	
1		D408 412 00	* Decal (Model)	1		WY010001-	
2		D408 421 00	* Decal (Model)	1		WY010001-	
3	×	D405 091 00	* Decal (Serial No.)	1		WY010001-	
3-1		0497 035 00	* Screw, Drive	4		WY010001-	d=3
4		4405 457 00	* Decal (Oil)	1		WY010001-	
5		D406 562 00	* Decal (Oil Check)	1		WY010001-	
6		D408 359 00	* Decal (Lub. Chart)	1		WY010001-	
7		D408 331 00	* Decal (Engine Daily Check)	1		WY010001-	
8		4448 603 00	* Decal (Safety Works)	1		WY010001-	
9		D408 428 00	* Decal (Tank Decompression)	1		WY010001-	
10		D405 507 00	* Decal (Safety Swing)	1		WY010001-	
11		D405 511 00	* Decal (Caution)	2		WY010001-	
12		D405 505 00	* Decal (Caution)	2		WY010001-	
13		D405 366 00	* Decal (Caution)	1		WY010001-	
14		D405 509 00	* Decal (Caution)	1		WY010001-	
15		D405 359 00	* Decal (Caution)	1		WY010001-	
16		D405 503 00	* Decal (Caution)	1		WY010001-	
17		D405 508 00	* Decal (Caution)	1		WY010001-	
18		D405 504 00	* Decal (Caution)	1		WY010001-	
19		D405 506 00	* Decal (Caution)	1		WY010001-	
20		D405 594 00	* Decal (Caution)	1		WY010001-	
21		4448 598 00	* Decal (Anti-Freezing Solution)	1		WY010001-	
22		D406 783 00	* Decal (Environment)	1		WY010001-	
23		D408 371 00	* Decal (Reflector)	2		WY010001-	
24		D408 337 00	* Decal (Boom Lowering)	1		WY010001-	
25		4449 406 00	* Decal (Spare Piping Change)	1		WY010001-	
26		4448 607 00	* Decal (Breaker Cation)	1		WY010001-	
27		4448 619 00	* Decal (Transport Fix)	1		WY010001-	
28		D408 351 00	* Decal (Lifting Procedures)	1		WY010001-	
29	×	D405 097 00	* Decal (New Machine)	1		WY010001-	
30		D406 032 00	* Decal (Noise 97)	1		WY010001-	
31		D407 943 00	* Decal (EPA Regulation)	1		WY010001-	
32		D405 510 00	* Decal (Caution)	1		WY010001-	
33		D408 402 00	* Decal (IHI)	3		WY010001-	
34		D408 403 00	* Decal (IHI)	1		WY010001-	
35		D406 630 00	* Decal (Blade, Pedal)	1		WY010001-	
36		D406 622 00	* Decal (Control A)	1		WY010001-	
36-1		D406 623 00	* Decal (Control B)	1		WY010001-	
36-2		D406 624 00	* Decal (Control C)	1		WY010001-	
36-3		D406 625 00	* Decal (Control D)	1		WY010001-	
37		D406 628 00	* Decal (Control A-D)	1		WY010001-	

https://truckmanualshub.com/

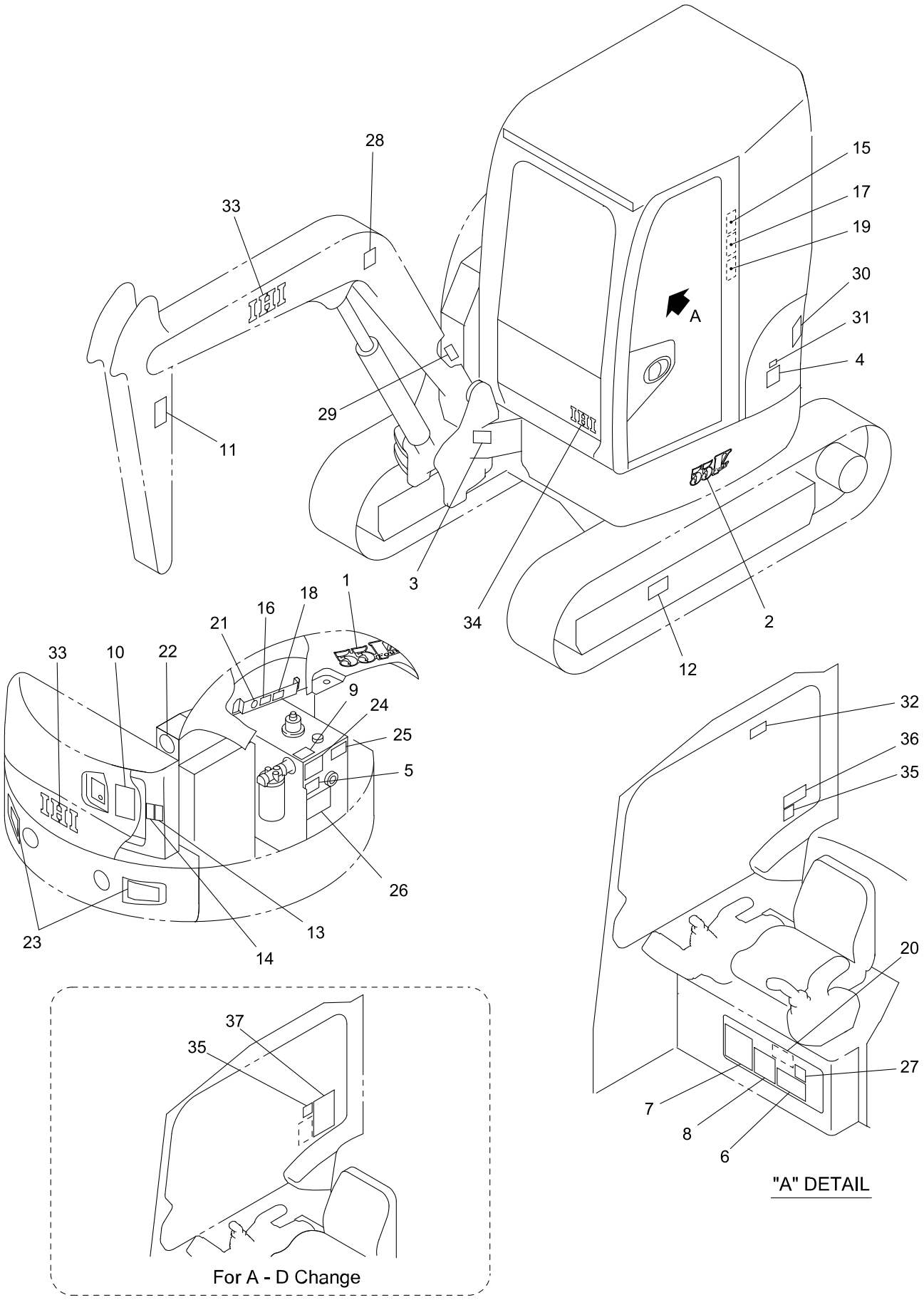

50V4-15100B-1

15

IHI

NAME PLATE ASS'Y (FOR SPANISH)

MODEL 55V4

SHEET No 15-10[G]

https://truckmanualshub.com/

KEY No.	SUP.	PART No.	DESCRIPTION	Q'TY	CHAN.	SERIAL No.	REMARKS
0	×	F377 852 00	Decal Ass'y	1		WY010001-	
0-1	×	F377 855 00	Decal Ass'y	1		WY010001-	
1		D408 412 00	* Decal (Model)	1		WY010001-	
2		D408 421 00	* Decal (Model)	1		WY010001-	
3	×	D405 091 00	* Decal (Serial No.)	1		WY010001-	
3-1		0497 035 00	* Screw, Drive	4		WY010001-	d=3
4		D406 000 00	* Decal (Oil)	1		WY010001-	
5		D406 811 00	* Decal (Oil Check)	1		WY010001-	
6		D408 361 00	* Decal (Lub. Chart)	1		WY010001-	
7		D408 333 00	* Decal (Engine Daily Check)	1		WY010001-	
8		D407 016 00	* Decal (Safety Works)	1		WY010001-	
9		D408 430 00	* Decal (Tank Decompression)	1		WY010001-	
10		D405 507 00	* Decal (Safety Swing)	1		WY010001-	
11		D405 511 00	* Decal (Caution)	2		WY010001-	
12		D405 505 00	* Decal (Caution)	2		WY010001-	
13		D405 366 00	* Decal (Caution)	1		WY010001-	
14		D405 509 00	* Decal (Caution)	1		WY010001-	
15		D405 359 00	* Decal (Caution)	1		WY010001-	
16		D405 503 00	* Decal (Caution)	1		WY010001-	
17		D405 508 00	* Decal (Caution)	1		WY010001-	
18		D405 504 00	* Decal (Caution)	1		WY010001-	
19		D405 506 00	* Decal (Caution)	1		WY010001-	
20		D406 005 00	* Decal (Caution)	1		WY010001-	
21		D406 012 00	* Decal (Anti-Freezing Solution)	1		WY010001-	
22		D406 783 00	* Decal (Environment)	1		WY010001-	
23		D408 371 00	* Decal (Reflector)	2		WY010001-	
24		D408 339 00	* Decal (Boom Lowering)	1		WY010001-	
25		D406 720 00	* Decal (Spare Piping Change)	1		WY010001-	
26		D406 002 00	* Decal (Breaker Cation)	1		WY010001-	
27		D406 007 00	* Decal (Transport Fix)	1		WY010001-	
28		D408 353 00	* Decal (Lifting Procedures)	1		WY010001-	
29	×	D405 097 00	* Decal (New Machine)	1		WY010001-	
30		D406 032 00	* Decal (Noise 97)	1		WY010001-	
31		D407 943 00	* Decal (EPA Regulation)	1		WY010001-	
32		D405 510 00	* Decal (Caution)	1		WY010001-	
33		D408 402 00	* Decal (IHI)	3		WY010001-	
34		D408 403 00	* Decal (IHI)	1		WY010001-	
35		D406 630 00	* Decal (Blade, Pedal)	1		WY010001-	
36		D406 622 00	* Decal (Control A)	1		WY010001-	
36-1		D406 623 00	* Decal (Control B)	1		WY010001-	
36-2		D406 624 00	* Decal (Control C)	1		WY010001-	
36-3		D406 625 00	* Decal (Control D)	1		WY010001-	
37		D406 628 00	* Decal (Control A-D)	1		WY010001-	

https://truckmanualshub.com/

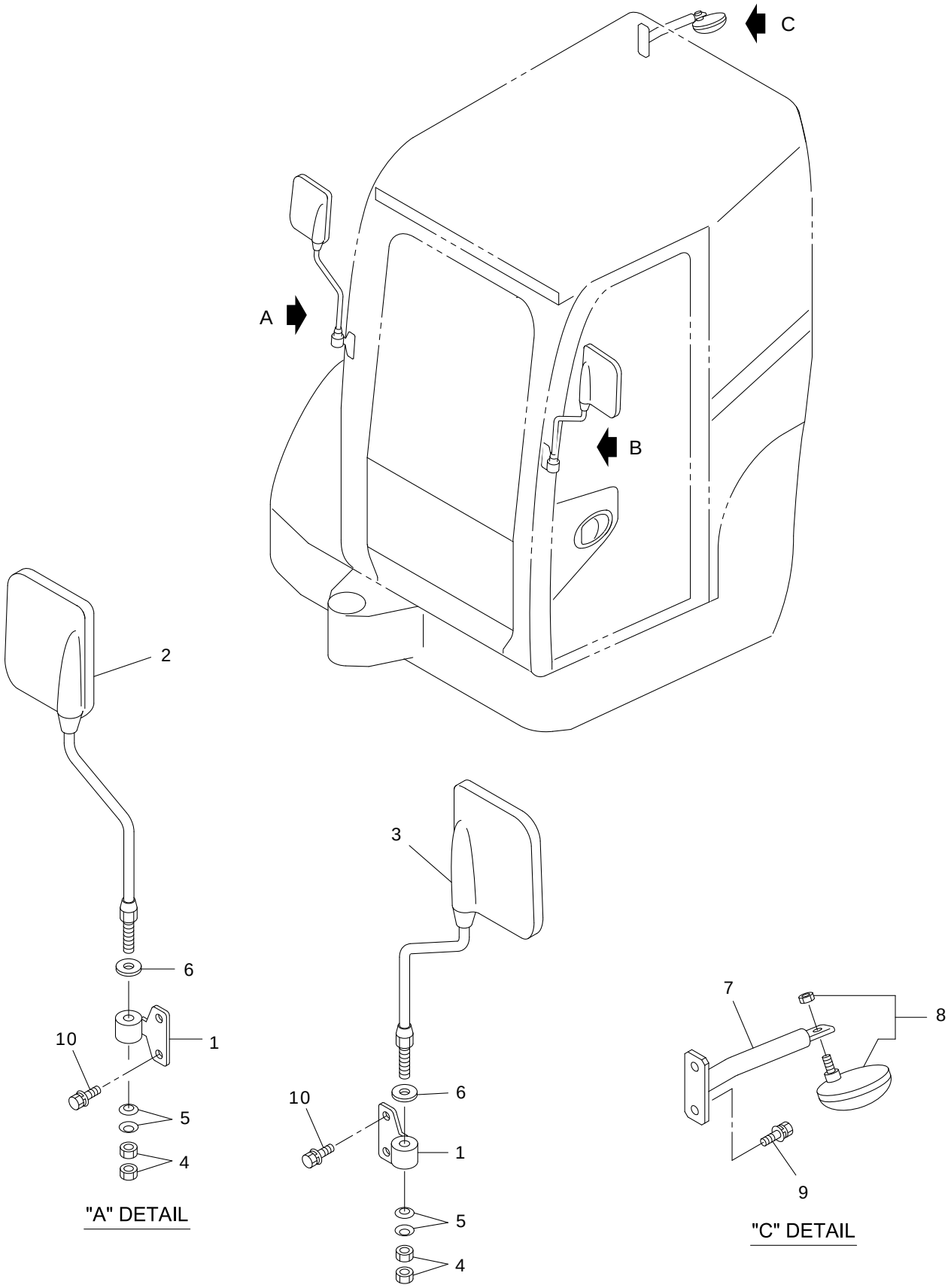

V4ALL-151100-1

https://truckmanualshub.com/

KEY No.	SUP.	PART No.	DESCRIPTION	Q'TY	CHAN.	SERIAL No.	REMARKS
0	×	F355 037 00	Mirror Ass'y	1		WY010001-	
1		D416 701 00	* Bracket	2		WY010001-	
2		0699 901 12	* Mirror, Back	1		WY010001-	
3		0699 901 13	* Mirror, Back	1		WY010001-	
4		0580 120 00	* Nut, Hex.	4		WY010001-	M12
5		0491 800 12	* Washer, Conical Spring	4		WY010001-	M12
6		0593 120 00	* Washer, Flat	2		WY010001-	M12
7		D260 381 00	* Stay	1		WY010001-	
8		0690 203 08	* Mirror, Under	1		WY010001-	
9		0439 100 25	* Bolt, Treatment (W/L.W,F.W)	2		WY010001-	M10X25 P=1.25
10		0439 100 20	* Bolt, Treatment (W/L.W,F.W)	4		WY010001-	M10X20 P=1.25

https://truckmanualshub.com/

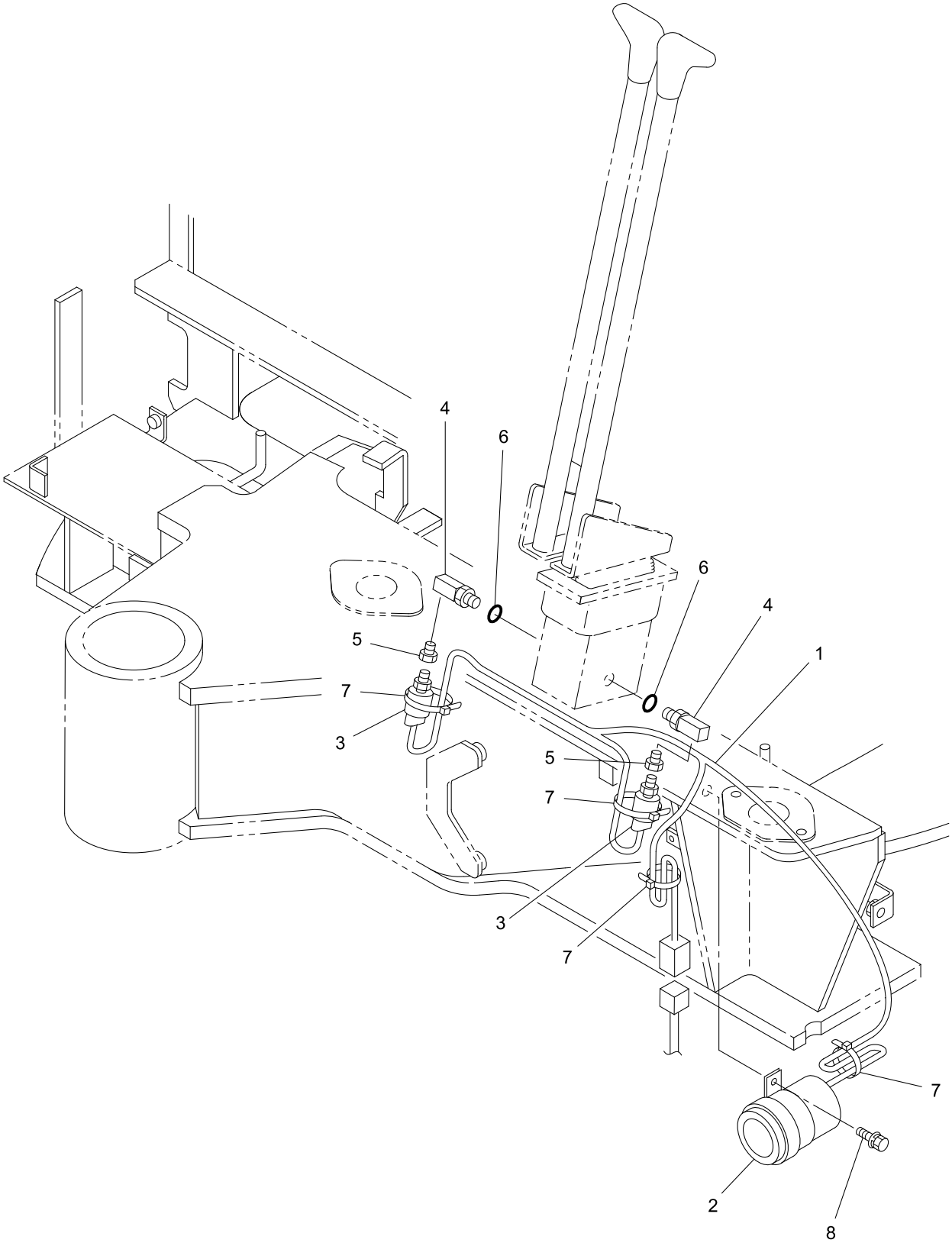

40V4-151200-1

https://truckmanualshub.com/

KEY No.	SUP.	PART No.	DESCRIPTION	Q'TY	CHAN.	SERIAL No.	REMARKS
0	×	F432 277 00	Alarm Device, Travvel	1		WY010001-	
1		D592 161 00	* Harness	1		WY010001-	
2		0857 011 48	* Horn, Back	1		WY010001-	
3		0858 180 10	* Switch, Pressure	2		WY010001-	
4		0719 804 UA	* Elbow	2		WY010001-	
5		0710 400 24	* Bush, Reducer	2		WY010001-	PT1/4XPT1/8
6		0760 710 12	* Ring, O	2		WY010001-	P11-90B
7		0820 067 04	* Band, Cable	4		WY010001-	
8		0517 080 25	* Bolt, Treatment (W/L.W, F.W)	1		WY010001-	M8X25

https://truckmanualshub.com/

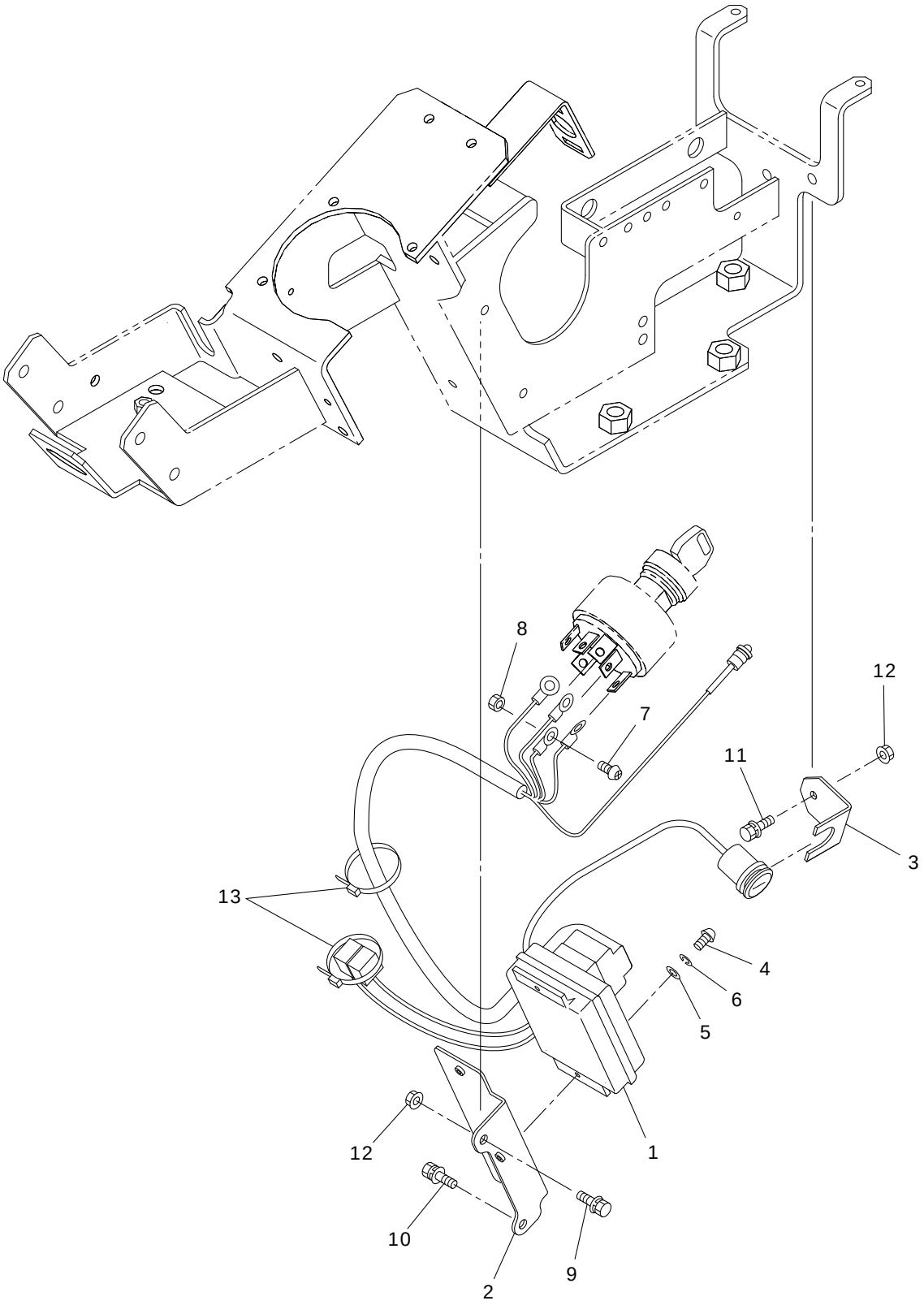

V4ALL-151300-1

https://truckmanualshub.com/

KEY No.	SUP.	PART No.	DESCRIPTION	Q'TY	CHAN.	SERIAL No.	REMARKS
0	×	F366 792 00	Immobilizer Ass'y	1		WY010001-	
1		0893 508 UA	* Controller Ass'y	1		WY010001-	
2		D418 688 00	* Bracket	1		WY010001-	
3		D418 689 00	* Bracket	1		WY010001-	
4		0565 040 10	* Screw, Pan Head	2		WY010001-	M4X10
5		0593 040 00	* Washer, Flat	2		WY010001-	M4
6		0590 040 00	* Washer, Lock	2		WY010001-	M4
7		0565 050 10	* Screw, Pan Head	1		WY010001-	M5X10
8		0580 050 00	* Nut, Hex.	1		WY010001-	M5
9		0517 060 25	* Bolt, Treatment (W/L.W, F.W)	1		WY010001-	M6X25
10		0517 060 12	* Bolt, Treatment (W/L.W, F.W)	1		WY010001-	M6X12
11		0517 060 16	* Bolt, Treatment (W/L.W, F.W)	1		WY010001-	M6X16
12		0521 060 00	* Nut, Hex. (W/F.W)	2		WY010001-	M6
13		0820 067 03	* Band, Cable	2		WY010001-	

https://truckmanualshub.com/

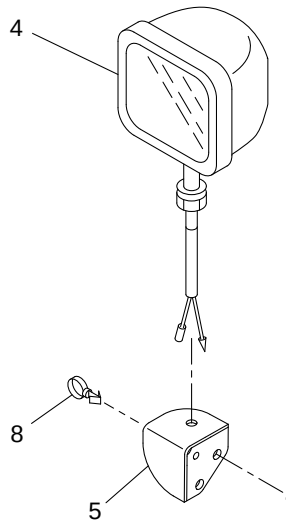

"A" DETAIL

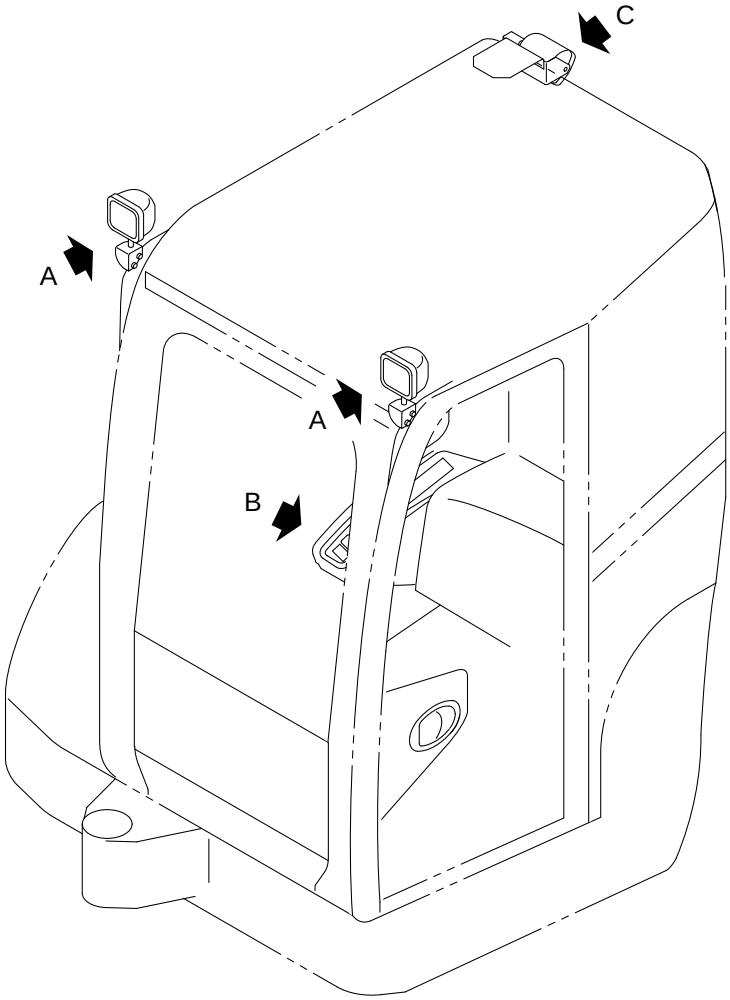

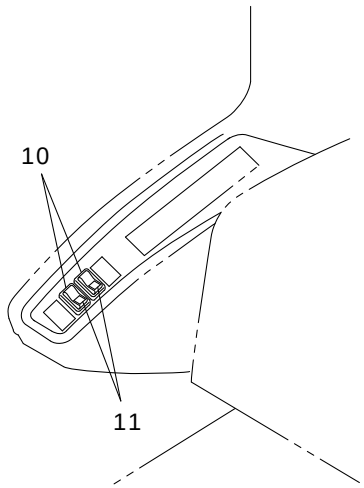

"B" DETAIL

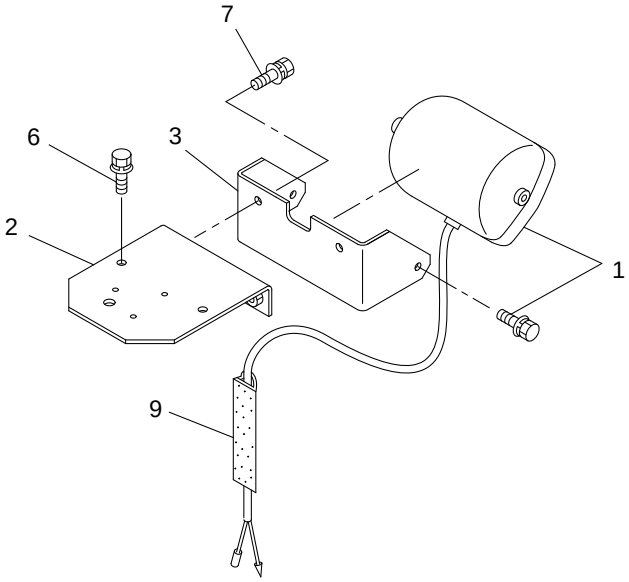

"C" DETAIL

V4ALL-151400-1

https://truckmanualshub.com/

KEY No.	SUP.	PART No.	DESCRIPTION	Q'TY	CHAN.	SERIAL No.	REMARKS
0	×	F385 402 00	Light Ass'y	1		WY010001-	
1		0854 536 UA	* Lamp Ass'y	1		WY010001-	
1-1		0854 536 01	** Lens	1		WY010001-	
1-2		0854 536 11	** Bulb	1		WY010001-	
2		D418 632 00	* Bracket	1		WY010001-	
3		D418 630 00	* Bracket	1		WY010001-	
4		0854 523 UA	* Light Ass'y	2		WY010001-	
4-1		0854 523 01	** Lens	1		WY010001-	
4-2		0854 523 06	** Bulb	1		WY010001-	
5		D419 161 00	* Bracket	2		WY010001-	
6		0439 100 20	* Bolt, Treatment (W/L.W, F.W)	2		WY010001-	M10X20 P=1.25
7		0439 100 25	* Bolt, Treatment (W/L.W, F.W)	6		WY010001-	M10X25 P=1.25
8		0690 082 08	* Clamp, Hose	2		WY010001-	
9		4522 707 01	* Duct	1		WY010001-	
10		0858 314 11	* Switch Ass'y, Light	2		WY010001-	
11		0858 314 12	* Decal	2		WY010001-	

https://truckmanualshub.com/

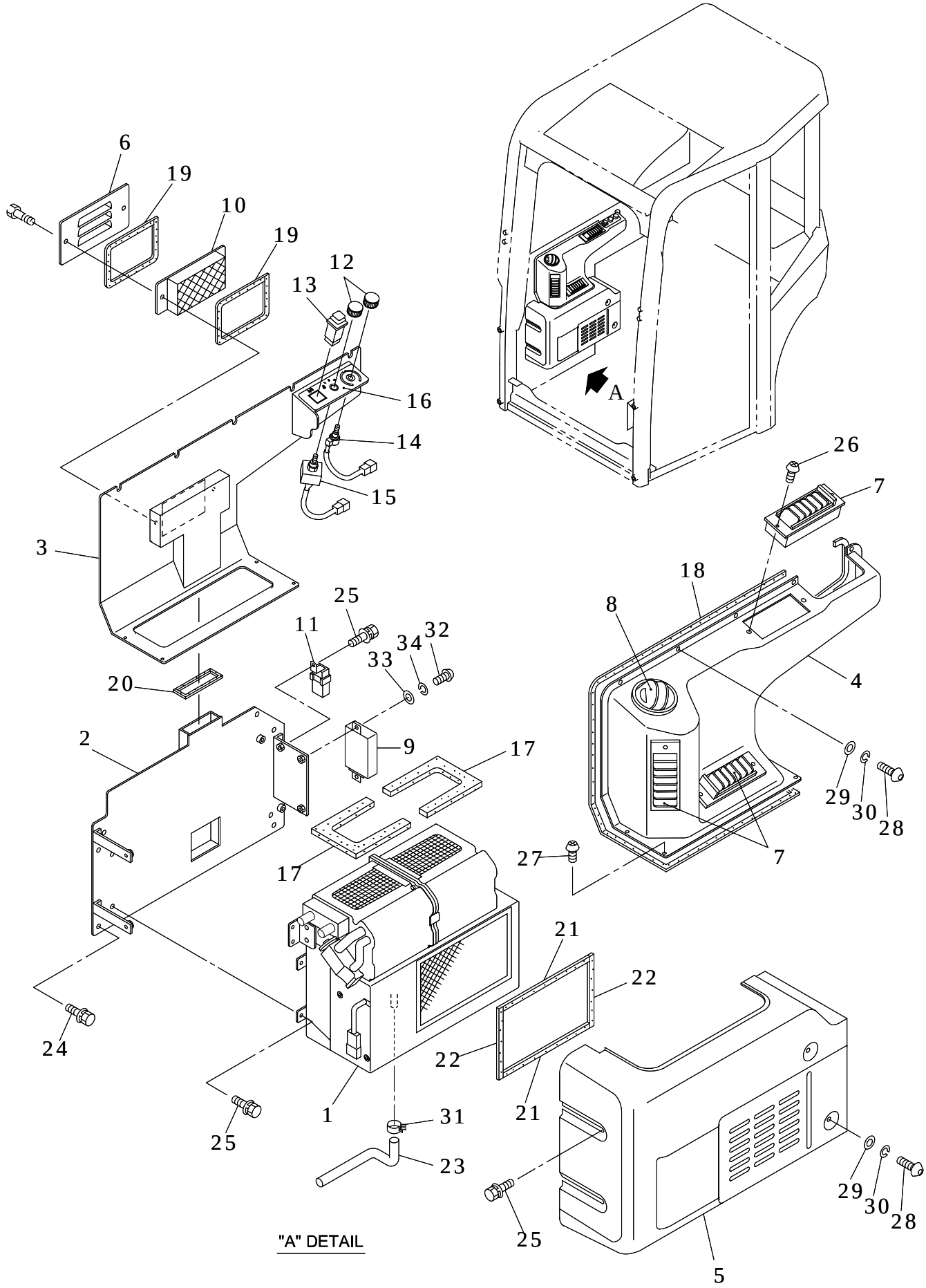

30V4-151500-1

https://truckmanualshub.com/

KEY No.	SUP.	PART No.	DESCRIPTION	Q'TY	CHAN.	SERIAL No.	REMARKS
0	×	F385 396 00	Air Conditioner Ass'y (1)	1		WY010001-	
1		0892 270 UA	* Air Conditioner Ass'y	1		WY010001-	
2		D419 359 00	* Bracket	1		WY010001-	
3		D452 207 00	* Bracket	1		WY010001-	
4		D465 382 00	* Duct	1		WY010001-	
5		D465 383 00	* Panel	1		WY010001-	
6		D458 508 00	* Cover	1		WY010001-	
7		0820 023 19	* Louver	3		WY010001-	
8		0820 023 18	* Louver	1		WY010001-	
9		0898 000 02	* Amplifier	1		WY010001-	
10		0745 142 UA	* Filter, Air	1		WY010001-	
11		0820 215 07	* Relay	1		WY010001-	
12		0690 210 86	* Knob	2		WY010001-	
13		0898 000 05	* Switch	1		WY010001-	
14		0898 000 03	* Volume, Thermodtat	1		WY010001-	
15		0898 000 04	* Switch Ass'y, Blower	1		WY010001-	
16		D408 205 00	* Decal	1		WY010001-	
17		D493 694 00	* Seal, Sponge	2		WY010001-	
18		D551 009 01	* Seal, Sponge	2		WY010001-	L=1000
19		D551 009 02	* Seal, Sponge	2		WY010001-	L=430
20		D551 009 03	* Seal, Sponge	1		WY010001-	L=230
21		D551 010 01	* Seal, Sponge	2		WY010001-	L=210
22		D551 010 02	* Seal, Sponge	2		WY010001-	L=150
23		4070 740 01	* Hose, Fuel	1		WY010001-	L=390
24		0518 100 20	* Bolt, Treatment (W/L.W, F.W)	4		WY010001-	M10X20 P=1.25
25		0517 060 16	* Bolt, Treatment (W/L.W, F.W)	9		WY010001-	M6X16
26		0454 300 12	* Screw, Tapping	6		WY010001-	M3X12
27		0454 600 12	* Screw, Tapping	4		WY010001-	M6X12
28		4004 280 01	* Bolt, Button Head	7		WY010001-	M6X16
29		0593 060 00	* Washer, Flat	7		WY010001-	M6
30		0590 060 00	* Washer, Lock	7		WY010001-	M6
31		0690 082 07	* Clamp	1		WY010001-	
32		0565 040 12	* Screw, Pan Head	2		WY010001-	M4X12
33		0593 040 00	* Washer, Flat	2		WY010001-	M4
34		0590 040 00	* Washer, Lock	2		WY010001-	M4

https://truckmanualshub.com/

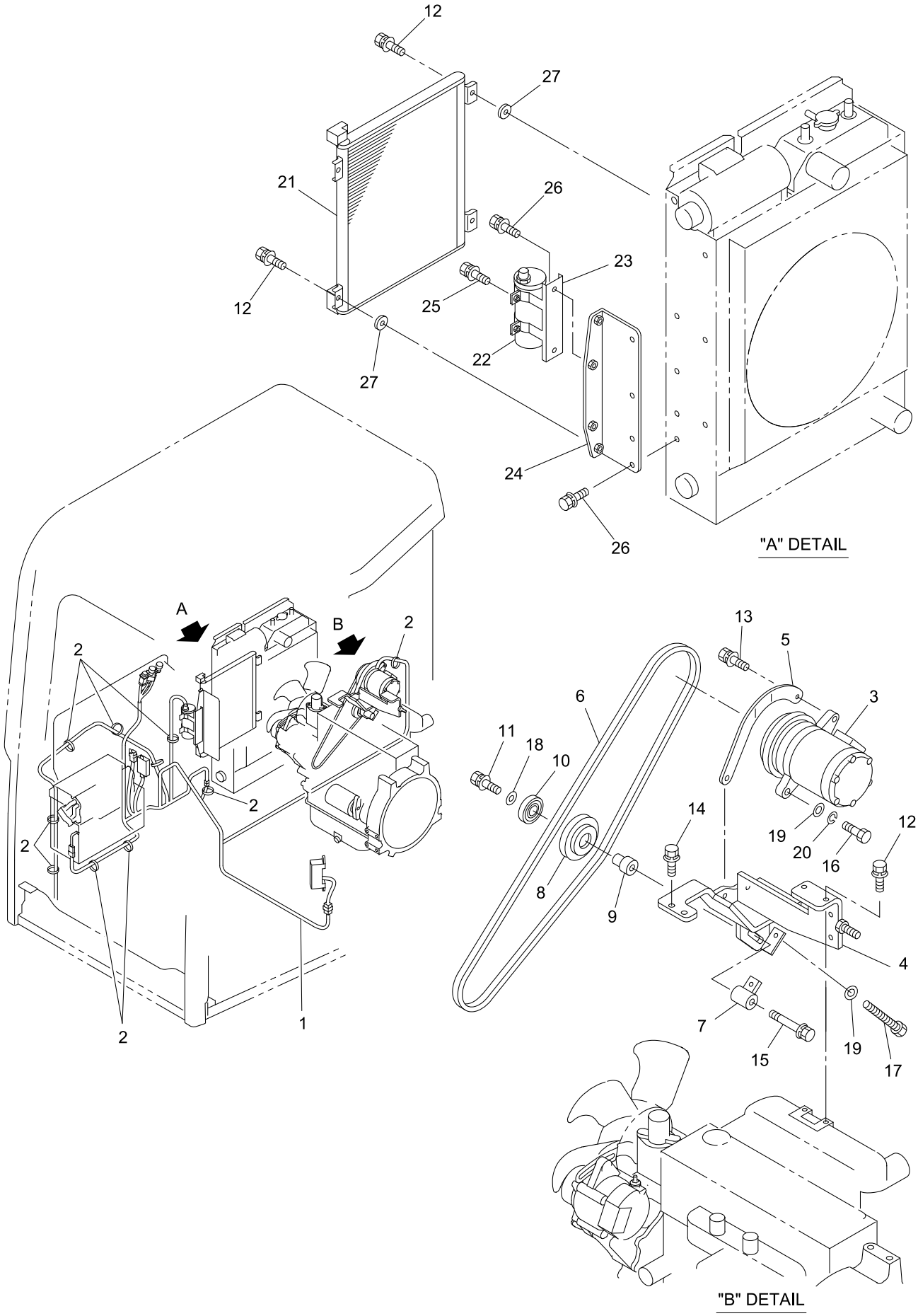

40V4-151600-1

https://truckmanualshub.com/

KEY No.	SUP.	PART No.	DESCRIPTION	Q'TY	CHAN.	SERIAL No.	REMARKS
0	×	F385 400 00	Air Conditioner Ass'y (2)	1		WY010001-	
1		D592 307 00	* Harness	1		WY010001-	
2		0820 067 04	* Band, Cable	8		WY010001-	
3		0897 018 UA	* Compressor Ass'y	1		WY010001-	
4		D419 349 00	* Bracket	1		WY010001-	
5		D260 518 00	* Stay	1		WY010001-	
6		0910 101 19	* Belt	1		WY010001-	
7		D131 100 00	* Boss	1		WY010001-	
8		D032 017 00	* Pully	1		WY010001-	
9		D040 381 00	* Spacer	1		WY010001-	
10		0630 620 33	* Bearing	1		WY010001-	6203UU
11		0517 080 12	* Bolt, Treatment (W/L.W, F.W)	1		WY010001-	M8X12
12		0517 080 25	* Bolt, Treatment (W/L.W, F.W)	6		WY010001-	M8X25
13		0517 080 30	* Bolt, Treatment (W/L.W, F.W)	3		WY010001-	M8X30
14		0517 080 40	* Bolt, Treatment (W/L.W, F.W)	2		WY010001-	M8X40
15		0517 080 55	* Bolt, Treatment (W/L.W, F.W)	1		WY010001-	M8X55
16		0513 080 40	* Bolt, Treatment	1		WY010001-	M8X40
17		0551 080 60	* Bolt, Hex.(Full-Thread)	1		WY010001-	M8X60
18		4006 119 01	* Washer	1		WY010001-	M8
19		0593 080 00	* Washer, Flat	2		WY010001-	M8
20		0590 080 00	* Washer, Lock	1		WY010001-	M8
21		0897 019 UA	* Condenser	1		WY010001-	
22		0897 002 UA	* Dryer, Recerver	1		WY010001-	
23		0898 000 01	* Bracket	1		WY010001-	
24		D419 370 00	* Bracket	1		WY010001-	
25		0517 060 20	* Bolt, Treatment (W/L.W, F.W)	2		WY010001-	M6X20
26		0517 080 20	* Bolt, Treatment (W/L.W, F.W)	5		WY010001-	M8X20
27		F771 315 00	* Washer, Rubber	4		WY010001-	

https://truckmanualshub.com/

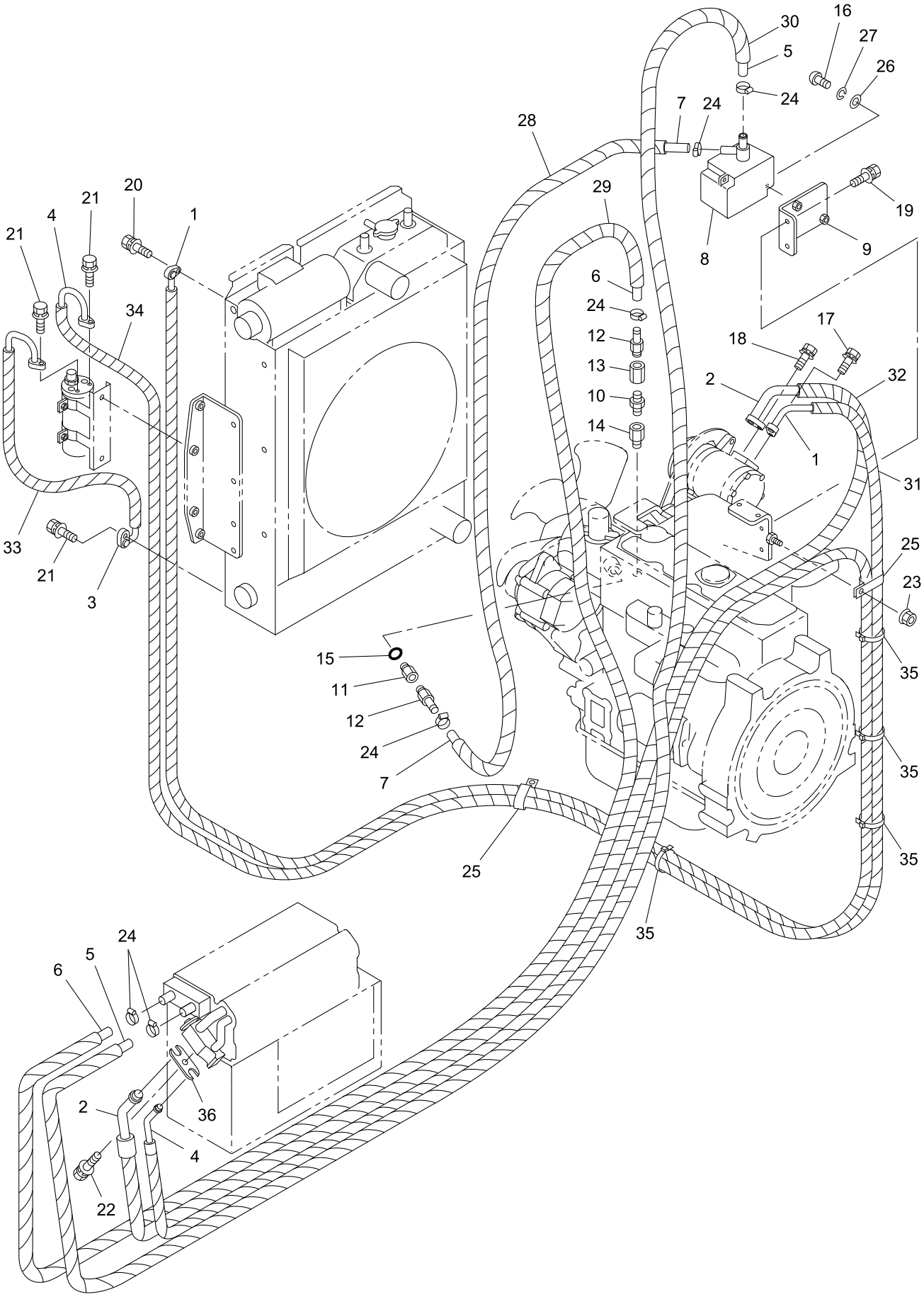

40V4-151700-1

https://truckmanualshub.com/

KEY No.	SUP.	PART No.	DESCRIPTION	Q'TY	CHAN.	SERIAL No.	REMARKS
0	×	F385 394 00	Piping, Ass'y Air Conditioner	1		WY010001-	
1		0898 000 68	* Hose	1		WY010001-	
2		0898 000 69	* Hose	1		WY010001-	
3		0898 000 70	* Hose	1		WY010001-	
4		0898 000 71	* Hose	1		WY010001-	
5		4070 102 44	* Hose, Water	M		WY010001-	L=2000
6		4070 102 45	* Hose, Water	M		WY010001-	L=1750
7		4070 102 31	* Hose, Water	M		WY010001-	L=700
8		0898 000 00	* Valve, Water	1		WY010001-	
9		D419 206 00	* Bracket	1		WY010001-	
10		0710 600 13	* Nipple	1		WY010001-	PT3/8XPT1/4
11		0713 704 03	* Connector	1		WY010001-	
12		4072 220 00	* Nipple	2		WY010001-	
13		0710 501 03	* Socket	1		WY010001-	
14		0710 503 02	* Socket	1		WY010001-	
15		0760 710 16	* Ring, O	1		WY010001-	P14-90B
16		0565 050 10	* Screw, Pan Head	2		WY010001-	M5X10
17		0517 080 35	* Bolt, Treatment (W/L.W, F.W)	1		WY010001-	M8X35
18		0517 080 25	* Bolt, Treatment (W/L.W, F.W)	1		WY010001-	M8X25
19		0517 080 20	* Bolt, Treatment (W/L.W, F.W)	2		WY010001-	M8X20
20		0517 060 40	* Bolt, Treatment (W/L.W, F.W)	1		WY010001-	M6X40
21		0517 060 25	* Bolt, Treatment (W/L.W, F.W)	3		WY010001-	M6X25
22		0517 060 20	* Bolt, Treatment (W/L.W, F.W)	1		WY010001-	M6X20
23		0524 100 00	* Nut, Hex. (W/F.W)	1		WY010001-	M10 P=1.25
24		0690 083 04	* Clamp, Hose	6		WY010001-	
25		4080 000 26	* Clamp, Hose	2		WY010001-	
26		0593 050 00	* Washer, Flat	2		WY010001-	M5
27		0590 050 00	* Washer, Lock	2		WY010001-	M5
28		0820 803 06	* Tube, Corrugate	M		WY010001-	L=600
29		0820 803 06	* Tube, Corrugate	M		WY010001-	L=1650
30		0820 803 06	* Tube, Corrugate	M		WY010001-	L=1900
31		0820 803 05	* Tube, Corrugate	M		WY010001-	L=2100
32		0820 803 06	* Tube, Corrugate	M		WY010001-	L=1650
33		0820 803 04	* Tube, Corrugate	M		WY010001-	L=250
34		0820 803 04	* Tube, Corrugate	M		WY010001-	L=3300
35		0820 067 04	* Band, Cable	4		WY010001-	
36		**** *** **	* Plate, Flange	1		WY010001-	

https://truckmanualshub.com/

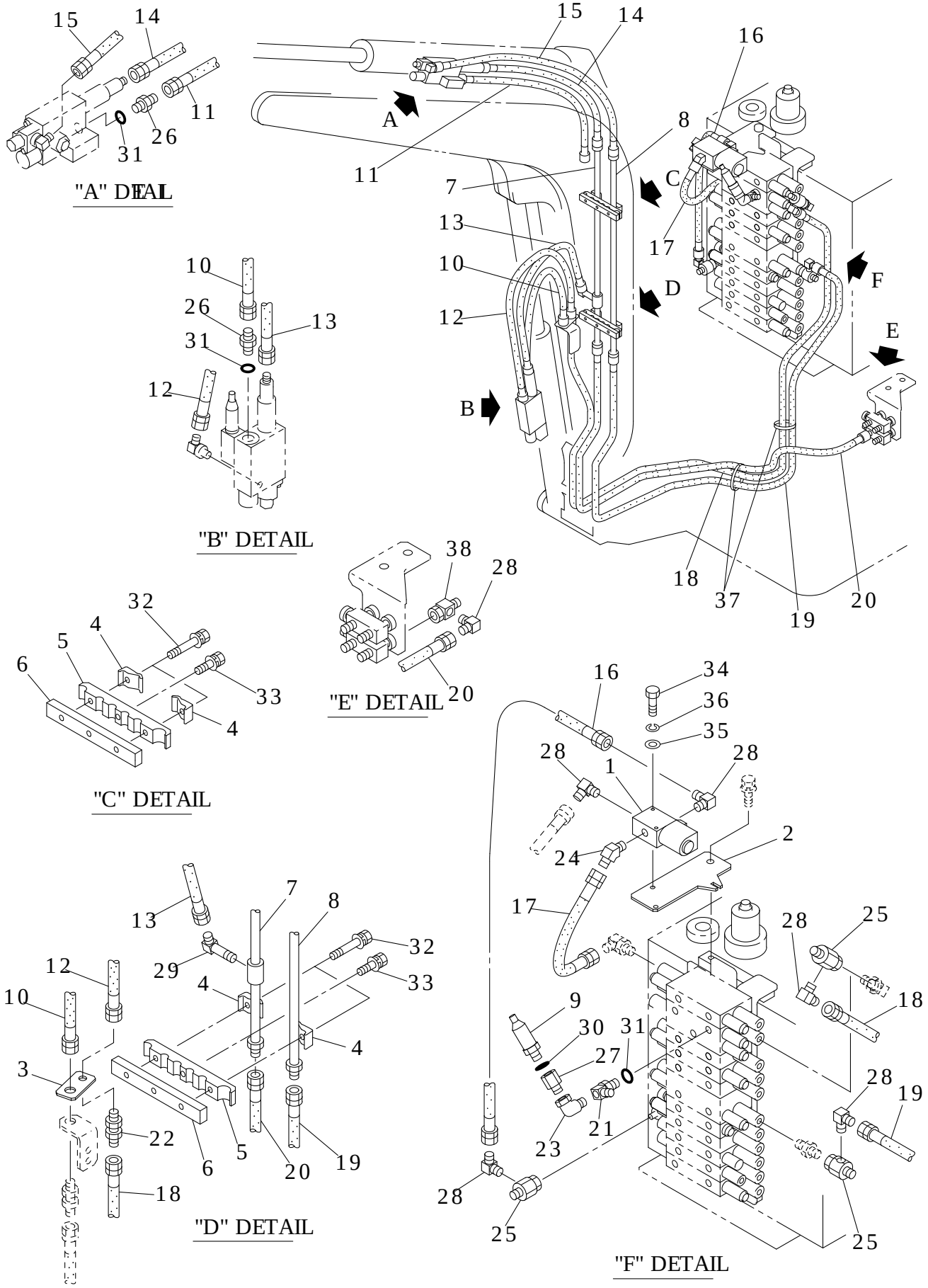

40V4-160100-1

https://truckmanualshub.com/

KEY No.	SUP.	PART No.	DESCRIPTION	Q'TY	CHAN.	SERIAL No.	REMARKS
0	×	F342 598 00	Piping Ass'y, Hydraulic	1		WY010001-	
1		0785 118 UA	* Valve, Solenoid	1		WY010001-	
2		D419 356 00	* Bracket	1		WY010001-	
3		D419 193 00	* Bracket	1		WY010001-	
4		4081 118 00	* Clamp, Tube	4		WY010001-	
5		D081 193 00	* Clamp, Tube	2		WY010001-	
6		D082 034 00	* Clamp, Seat	2		WY010001-	
7		D286 305 00	* Tube	1		WY010001-	
8		D286 306 00	* Tube	1		WY010001-	
9		0858 601 16	* Sensor, Pressure	1		WY010001-	
10		D070 388 01	* Hose Ass'y	1		WY010001-	L=940
11		D070 388 22	* Hose Ass'y	1		WY010001-	L=1100
12		4070 842 16	* Hose Ass'y	1		WY010001-	L=1160
13		4070 842 33	* Hose Ass'y	1		WY010001-	L=950
14		4070 842 28	* Hose Ass'y	1		WY010001-	L=1050
15		4070 842 29	* Hose Ass'y	1		WY010001-	L=1250
16		4070 548 27	* Hose Ass'y	1		WY010001-	L=600
17		4070 548 55	* Hose Ass'y	1		WY010001-	L=350
18		D070 195 21	* Hose Ass'y	1		WY010001-	L=3000
19		D070 195 17	* Hose Ass'y	1		WY010001-	L=2800
20		D070 195 03	* Hose Ass'y	1		WY010001-	L=2450
21		D060 164 00	* Connector	1		WY010001-	
22		D060 137 00	* Adapter	1		WY010001-	
23		0710 102 02	* Elbow	1		WY010001-	
24		0712 310 40	* Elbow, 45	1		WY010001-	
25		4072 930 01	* Adapter, Union	3		WY010001-	
26		0713 700 04	* Adapter	2		WY010001-	
27		0713 705 02	* Socket	1		WY010001-	
28		0712 310 50	* Elbow	6		WY010001-	
29		4072 866 02	* Elbow, Long	1		WY010001-	
30		0760 710 12	* Ring, O	1		WY010001-	P11-90B
31		0760 710 19	* Ring, O	3		WY010001-	P18-90B
32		0520 100 70	* Bolt, Treatment (W/L.W)	4		WY010001-	M10X70 P=1.25
33		0518 100 50	* Bolt, Treatment (W/L.W, F.W)	2		WY010001-	M10X50 P=1.25
34		0550 060 50	* Bolt, Hex.	2		WY010001-	M6X50
35		0593 060 00	* Washer, Flat	2		WY010001-	M6
36		0590 060 00	* Washer, Lock	2		WY010001-	M6
37		0820 067 05	* Band, Cable	2		WY010001-	
38		4072 930 02	* Union	1		WY010001-	

https://truckmanualshub.com/

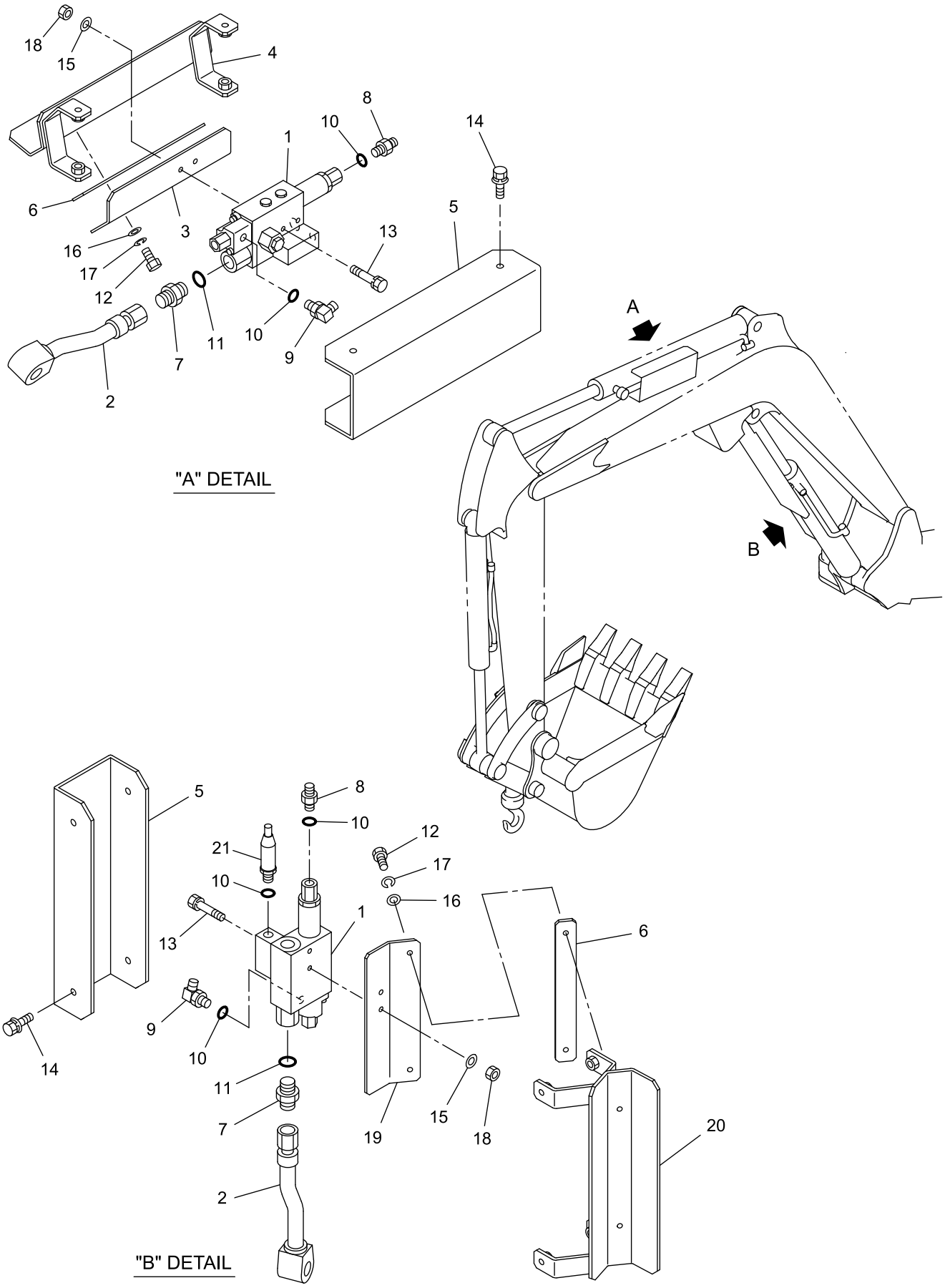

V4ALL-160200-1

https://truckmanualshub.com/

KEY No.	SUP.	PART No.	DESCRIPTION	Q'TY	CHAN.	SERIAL No.	REMARKS
0	×	F342 625 00	Valve Ass'y, Holding	1		WY010001-	
0-1	×	F342 624 00	Valve Ass'y, Holding	1		WY010001-	
1	#	0787 047 UA	* Valve, Holding	2		WY010001-	Sh.No.16-3
2		D286 339 00	* Tube	2		WY010001-	
3		D419 204 00	* Bracket	1		WY010001-	
4		D419 208 00	* Bracket	1		WY010001-	
5		D458 413 00	* Cover	2		WY010001-	
6		D007 244 01	* Shim	AR		WY010001-	t=1.6
6-1		D007 244 02	* Shim	AR		WY010001-	t=4.5
6-2		D007 244 03	* Shim	AR		WY010001-	t=6.0
7		0713 700 04	* Adapter	2		WY010001-	
8		0713 700 02	* Adapter	2		WY010001-	
9		0710 122 09	* Elbow	2		WY010001-	
10		0760 710 12	* Ring, O	5		WY010001-	P11-90B
11		0760 710 19	* Ring, O	2		WY010001-	P18-90B
12		0550 100 20	* Bolt, Hex.	4		WY010001-	M10X20
13		0519 080 55	* Bolt, Treatment (W/L.W)	4		WY010001-	M8X55
14		0517 080 16	* Bolt, Treatment (W/L.W, F.W)	8		WY010001-	M8X16
15		0593 080 00	* Washer, Flat	4		WY010001-	M8
16		0593 100 00	* Washer, Flat	4		WY010001-	M10
17		0590 100 00	* Washer, Lock	4		WY010001-	M10
18		0521 080 00	* Nut, Hex. (W/F.W)	4		WY010001-	M8
19		D419 203 00	* Bracket	1		WY010001-	
20		D419 207 00	* Bracket	1		WY010001-	
21		0858 601 16	* Sensor, Pressure	1		WY010001-	

https://truckmanualshub.com/

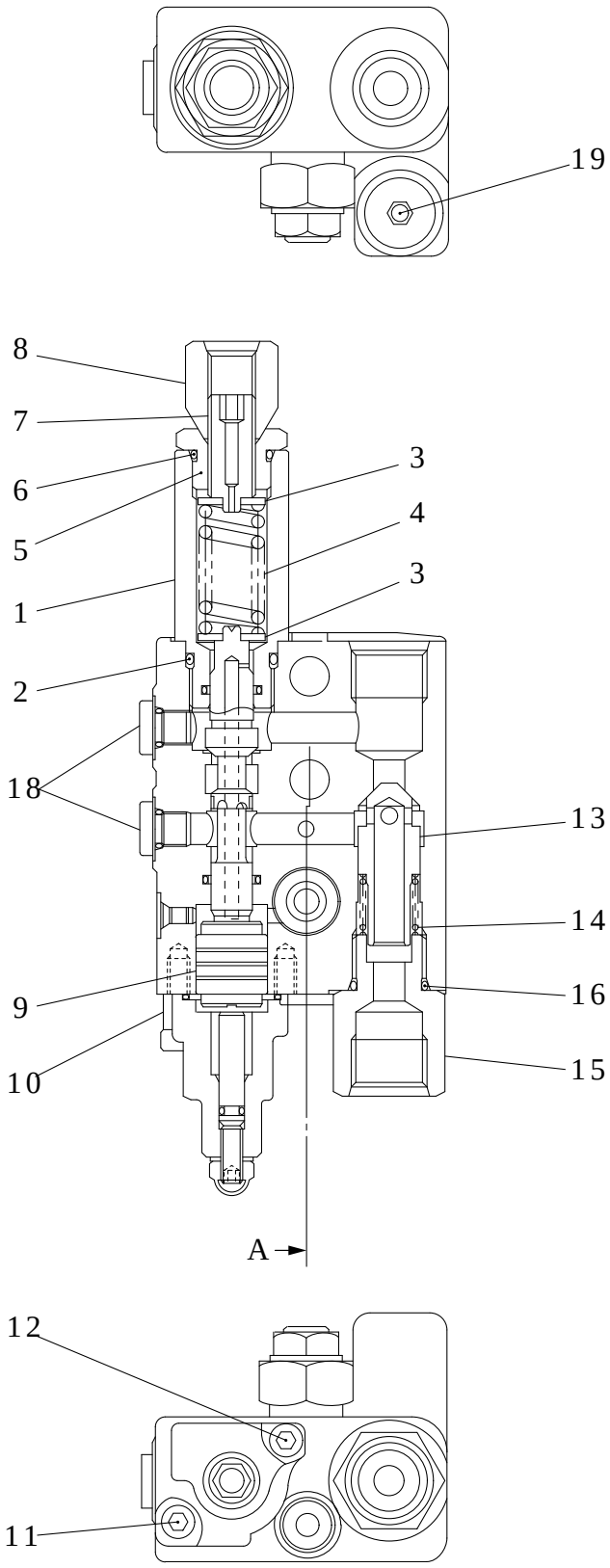

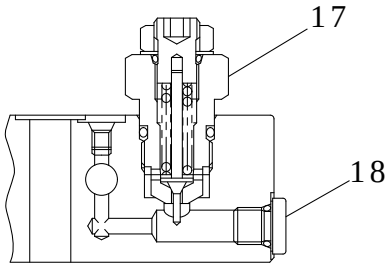

A SECTION

V4ALL-160300-1

https://truckmanualshub.com/

KEY No.	SUP.	PART No.	DESCRIPTION	Q'TY	CHAN.	SERIAL No.	REMARKS
0		0787 047 UA	Valve Ass'y, Holding	1		WY010001-	
1		0787 047 04	* Plug	1		WY010001-	
2		0760 710 22	* Ring, O	1		WY010001-	P22-90B
3		0784 047 06	* Seat, Spring	2		WY010001-	
4		0784 047 07	* Spring	1		WY010001-	
5		0787 047 08	* Plug	1		WY010001-	
6		0760 710 20	* Ring, O	1		WY010001-	P20-90B
7		0784 047 10	* Adjuster	1		WY010001-	
8		0784 047 11	* Nut, Hex.	1		WY010001-	
9		0784 047 12	* Piston	1		WY010001-	
10		0784 047 13	* Cap	1		WY010001-	
11		0562 060 16	* Bolt, Socket Head	1		WY010001-	M6X16
12		0562 060 35	* Bolt, Socket Head	1		WY010001-	M6X35
13		0787 047 16	* Poppet	1		WY010001-	
14		0787 047 17	* Spring	1		WY010001-	
15		0787 047 18	* Plug	1		WY010001-	
16		0760 710 19	* Ring, O	1		WY010001-	P18-90B
17		0787 047 91	* Valve, Relief	1		WY010001-	
18		0783 677 83	* Plug	3		WY010001-	
19		0783 846 85	* Plug	1		WY010001-	

https://truckmanualshub.com/

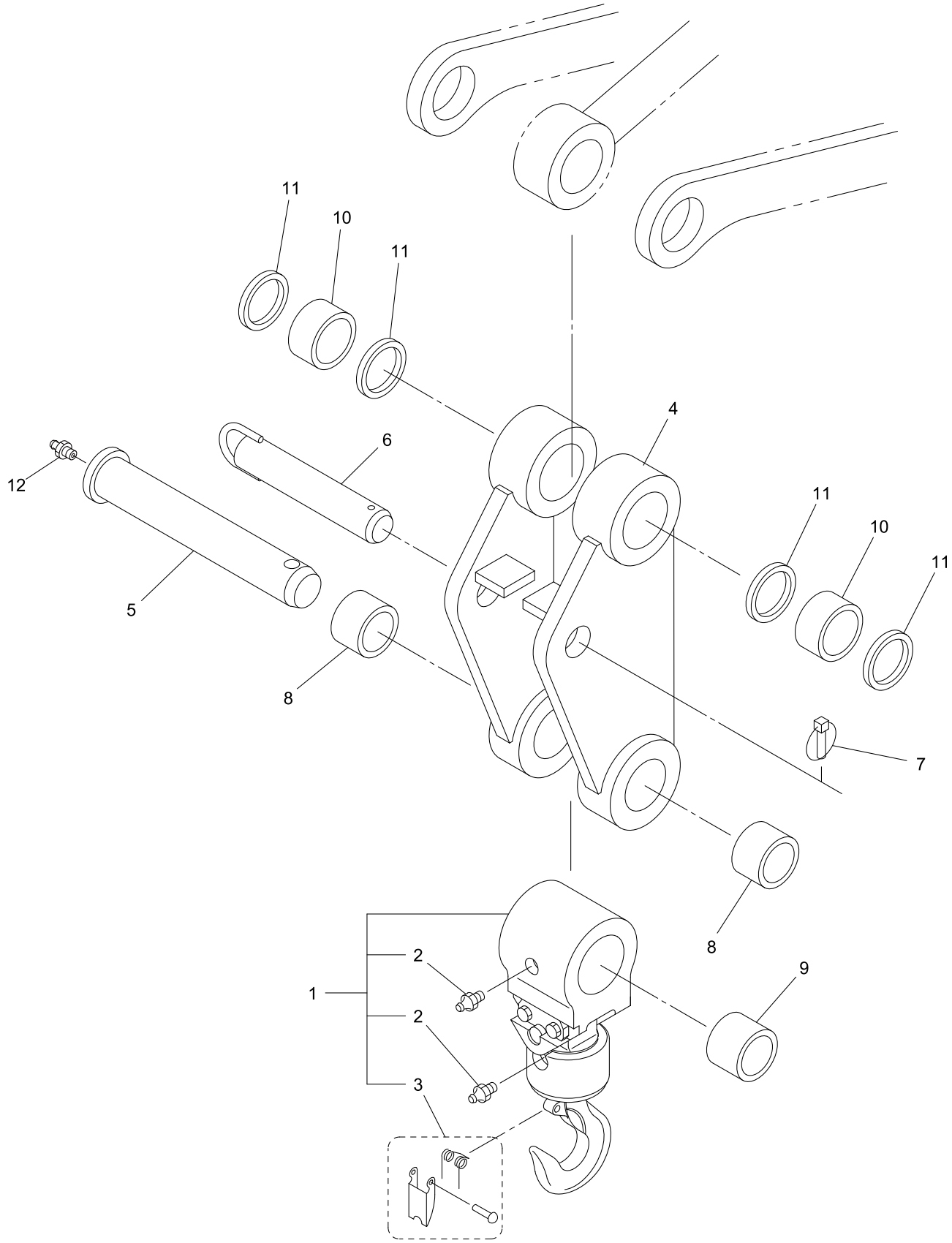

40V4-160400-1

https://truckmanualshub.com/

KEY No.	SUP.	PART No.	DESCRIPTION	Q'TY	CHAN.	SERIAL No.	REMARKS
0	×	F418 128 00	Block Ass'y, Hook	1		WY010001-	
1		0652 965 UA	* Hook	1		WY010001-	
2		0728 131 11	** Nipple, Grease	2		WY010001-	
3		0652 923 UA	** Ratch Ass'y	1		WY010001-	
4		D490 443 00	* Link, Backet	1		WY010001-	
5		D013 444 00	* Pin, Head	1		WY010001-	
6		D013 094 00	* Pin, Head	1		WY010001-	
7		4017 252 01	* Pin, Ring	1		WY010001-	
8		4043 231 02	* Bushing	2		WY010001-	
9		4043 261 03	* Bushing	1		WY010001-	
10		4043 231 12	* Bushing	2		WY010001-	
11		0765 033 27	* Seal, Dust	4		WY010001-	
12		0728 111 15	* Nipple, Grease	1		WY010001-	PT1/8

https://truckmanualshub.com/

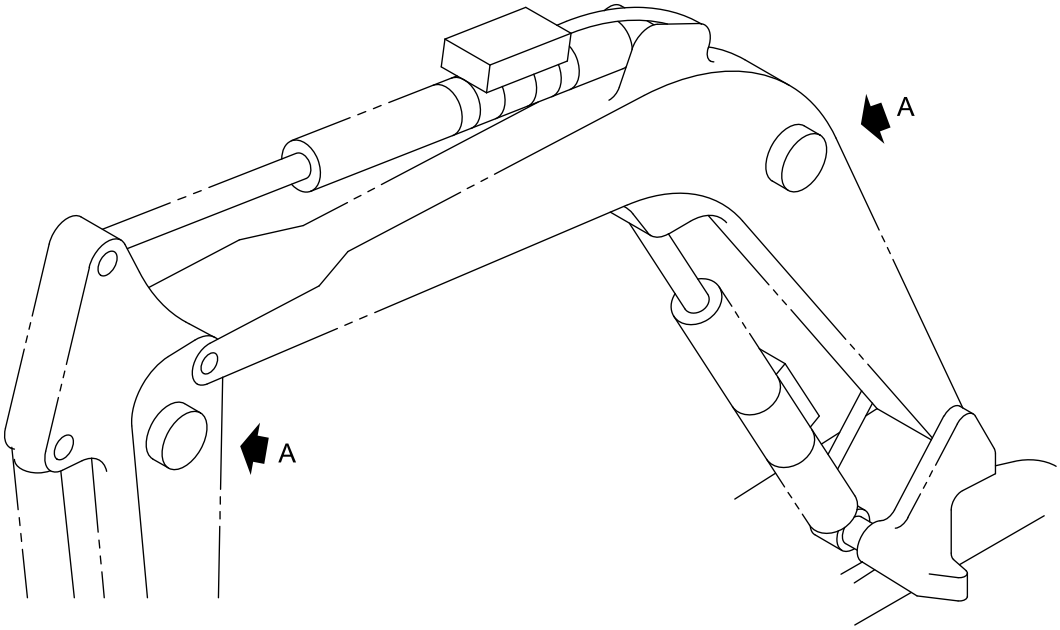

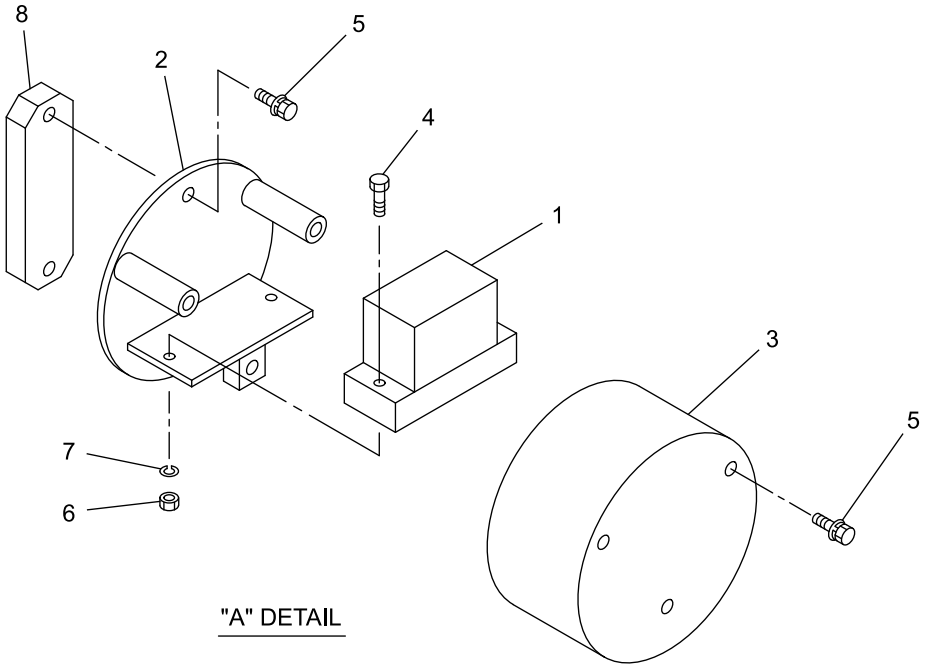

V4ALL-160500-1

https://truckmanualshub.com/

KEY No.	SUP.	PART No.	DESCRIPTION	Q'TY	CHAN.	SERIAL No.	REMARKS
0	×	F370 340 00	Angle Detector	1		WY010001-	
1		0881 100 UA	* Detector, Angle	2		WY010001-	
2		D414 314 00	* Bracket	2		WY010001-	
3		D455 737 00	* Cover	2		WY010001-	
4		0550 060 30	* Bolt, Hex.	4		WY010001-	M6X30
5		0518 100 20	* Bolt, Treatment (W/L.W, F.W)	10		WY010001-	M10X20 P=1.25
6		0580 060 00	* Nut, Hex.	4		WY010001-	M6
7		0590 060 00	* Washer, Lock	4		WY010001-	M6
8		D260 329 00	* Stay	2		WY010001-	

16

https://truckmanualshub.com/

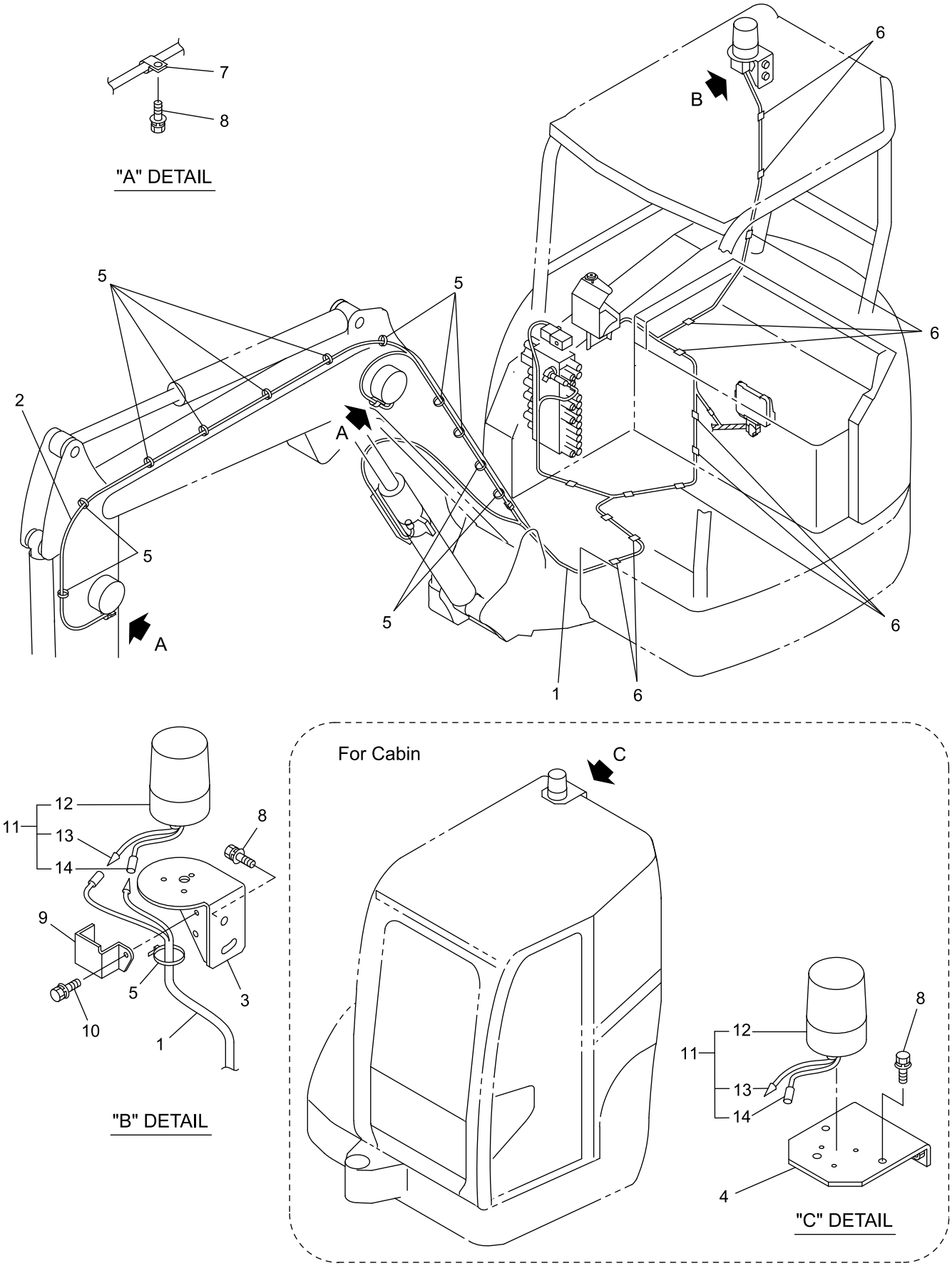

30V4-160600-1

https://truckmanualshub.com/

KEY No.	SUP.	PART No.	DESCRIPTION	Q'TY	CHAN.	SERIAL No.	REMARKS
0	×	F366 879 00	Electrical System	1		WY010001-	
1		D592 304 00	* Harness	1		WY010001-	
2		D592 305 00	* Harness	1		WY010001-	
3		D418 456 00	* Bracket	1		WY010001-	
4		D418 632 00	* Bracket	1		WY010001-	
5		0820 067 04	* Band, Cable	AR		WY010001-	
6		0820 069 03	* Sticker	AR		WY010001-	
7		4080 000 02	* Clamp, Hose	1		WY010001-	
8		0518 100 20	* Bolt, Treatment (W/L.W, F.W)	4		WY010001-	M10X20 P=1.25
9		D457 127 00	* Cover	1		WY010001-	
10		0517 080 16	* Bolt, Treatment (W/L.W, F.W)	1		WY010001-	M8X16
11		F366 201 00	* Light Ass'y, Revolving	1		WY010001-	
12		0854 060 01	** Light, Rotary	1		WY010001-	
13		0820 650 20	** Terminal	1		WY010001-	
13-1		0820 651 20	** Sleeve	1		WY010001-	
14		0820 650 21	** Terminal	1		WY010001-	
14-1		0820 651 21	** Sleeve	1		WY010001-	

https://truckmanualshub.com/

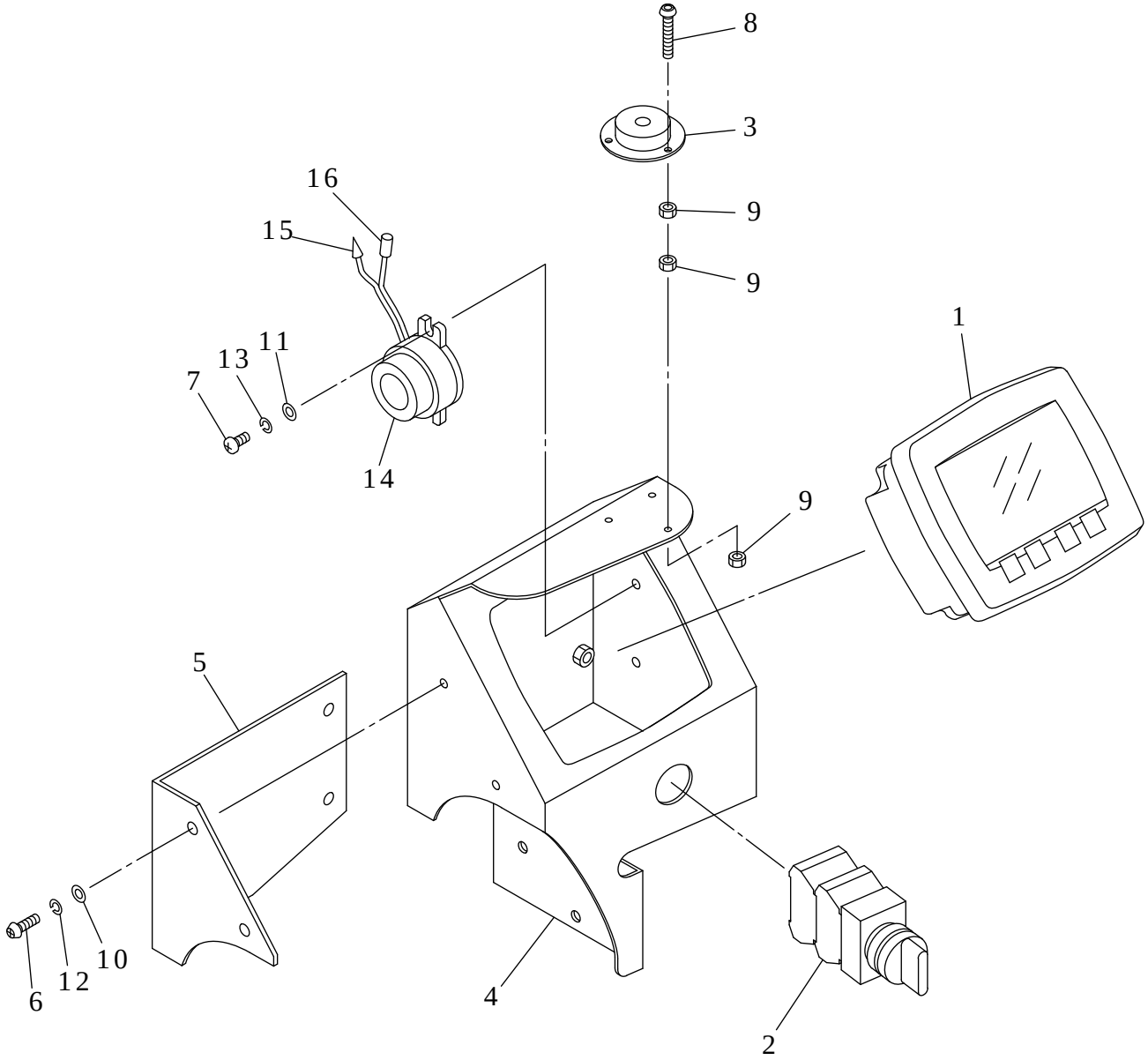

V4ALL-160700-1

https://truckmanualshub.com/

KEY No.	SUP.	PART No.	DESCRIPTION	Q'TY	CHAN.	SERIAL No.	REMARKS
0	×	F370 342 00	Controller Ass'y	1		WY010001-	
1		0877 900 11	* Display	1		WY010001-	
2		0858 308 23	* Switch, Select	1		WY010001-	
3		0933 054 UA	* Gauge, Level	1		WY010001-	
4		D419 357 00	* Bracket	1		WY010001-	For Canopy
4-1		D419 355 00	* Bracket	1		WY010001-	For Cabin
5		D458 497 00	* Cover	1		WY010001-	
6		4004 364 01	* Bolt, Button Head	4		WY010001-	M6X18
7		0565 040 08	* Screw, Pan Head	2		WY010001-	M4X8
8		0565 030 20	* Screw, Pan Head	3		WY010001-	M3X20
9		0580 030 00	* Nut, Hex.	9		WY010001-	M3
10		0594 060 00	* Washer, Flat	4		WY010001-	M6
11		0593 040 00	* Washer, Flat	2		WY010001-	M4
12		0596 060 00	* Washer, Lock	4		WY010001-	M6
13		0590 040 00	* Washer, Lock	2		WY010001-	M4
14		0860 504 02	* Buzzer	1		WY010001-	
15		0820 650 20	* Terminal	1		WY010001-	
15-1		0820 651 20	* Sleeve	1		WY010001-	
16		0820 650 21	* Terminal	1		WY010001-	
16-1		0820 651 21	* Sleeve	1		WY010001-	

https://truckmanualshub.com/

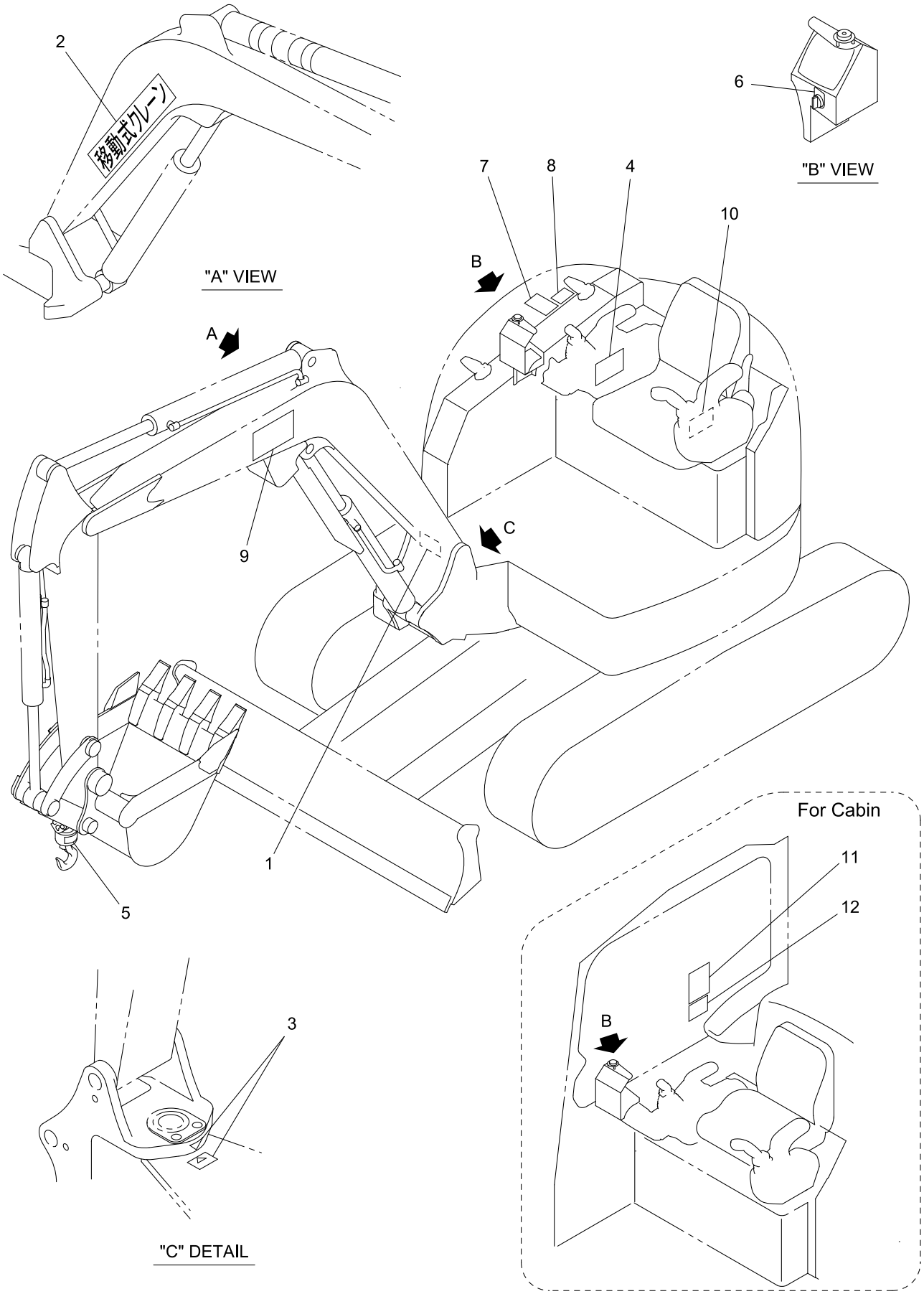

40V4-160800-1

https://truckmanualshub.com/

KEY No.	SUP.	PART No.	DESCRIPTION	Q'TY	CHAN.	SERIAL No.	REMARKS
0	×	F377 860 00	Decal Ass'y	1		WY010001-	
1		D405 857 00	* Decal	1		WY010001-	
1-1		0497 035 00	* Screw, Drive	4		WY010001-	
2		D405 859 00	* Decal	1		WY010001-	
3		D405 867 00	* Decal	1		WY010001-	
4		D408 396 00	* Decal	1		WY010001-	
5		D405 868 00	* Decal	1		WY010001-	
6		D408 637 00	* Decal	1		WY010001-	
7		D408 021 00	* Decal	1		WY010001-	
8		D408 020 00	* Decal	1		WY010001-	
9		D408 379 07	* Decal	1		WY010001-	
10		D408 392 00	* Decal	1		WY010001-	Canopy
10-1		D408 393 00	* Decal	1		WY010001-	Cabin
11		D408 038 00	* Decal	1		WY010001-	Cabin
12		D406 827 00	* Decal	1		WY010001-	Cabin

https://truckmanualshub.com/

[Memo]

IHI

https://truckmanualshub.com/

部品番号順索引

PARTS INDEX

55V4

PARTS No.	Sh No.	KEY No.	PARTS No.	Sh No.	KEY No.	PARTS No.	Sh No.	KEY No.
**** *** **	1-1	2	0497 035 00	8-7[A]	3-2	0517 060 20	15-16	25
**** *** **	5-8	24	0497 035 00	8-7[B]	3-1	0517 060 20	15-17	22
**** *** **	5-9	18	0497 035 00	8-7[C]	3-1	0517 060 25	4-4	5
**** *** **	5-10	19	0497 035 00	8-7[D]	3-1	0517 060 25	4-4[A]	5
**** *** **	5-11	17	0497 035 00	8-7[E]	3-1	0517 060 25	4-4[B]	5
**** *** **	5-12	18	0497 035 00	8-7[F]	3-1	0517 060 25	15-13	9
**** *** **	5-14	20	0497 035 00	8-7[G]	3-1	0517 060 25	15-17	21
**** *** **	15-17	36	0497 035 00	15-10	3-1	0517 060 40	15-17	20
0322 108 99	7-2	24	0497 035 00	15-10[A]	3-2	0517 060 60	4-4[B]	73
0438 060 16	15-9	12	0497 035 00	15-10[B]	3-1	0517 060 60	6-4	20
0439 100 20	8-5	6	0497 035 00	15-10[C]	3-1	0517 080 12	1-1	4
0439 100 20	15-11	10	0497 035 00	15-10[D]	3-1	0517 080 12	9-1	32
0439 100 20	15-14	6	0497 035 00	15-10[E]	3-1	0517 080 12	15-16	11
0439 100 25	8-4	3	0497 035 00	15-10[F]	3-1	0517 080 16	6-1	17
0439 100 25	8-4[A]	6	0497 035 00	15-10[G]	3-1	0517 080 16	6-3	21
0439 100 25	15-11	9	0497 035 00	16-8	1-1	0517 080 16	8-1	10
0439 100 25	15-14	7	0513 080 20	8-1	13	0517 080 16	9-1	4
0454 300 12	15-15	26	0513 080 40	15-16	16	0517 080 16	15-1	44
0454 400 20	9-2	8	0513 080 90	15-3	31	0517 080 16	16-2	14
0454 600 12	15-15	27	0513 100 16	4-1	49	0517 080 16	16-6	10
0457 080 16	7-1	36	0513 100 16	11-4	21	0517 080 20	2-1	11
0457 140 35	1-1	14	0513 100 20	7-4	41	0517 080 20	6-2	25
0480 100 20	1-1	21	0513 100 30	7-3	12	0517 080 20	6-3	15
0480 100 20	8-1	30	0513 100 30	11-3	11	0517 080 20	6-4	17
0491 800 12	15-11	5	0513 120 35	7-3	15	0517 080 20	7-1	19
0493 500 28	5-2	19	0513 121 00	7-1	15	0517 080 20	7-4	52
0493 500 30	7-3	7	0514 100 30	1-7	11	0517 080 20	8-2	27
0493 500 35	5-7	2	0514 100 30	7-2	12	0517 080 20	15-1	56
0493 510 08	6-1	26	0514 120 60	1-3	22	0517 080 20	15-4	6
0493 510 16	6-2	24	0514 120 90	11-1	31	0517 080 20	15-16	26
0493 510 22	5-2	5	0514 121 20	11-1	30	0517 080 20	15-17	19
0493 510 25	1-6	4	0517 060 12	6-2	27	0517 080 25	6-1	21
0493 510 30	5-15[B]	11	0517 060 12	6-4	25	0517 080 25	7-1	18
0493 510 55	5-3	3	0517 060 12	9-2	33	0517 080 25	7-2	29
0493 560 09	6-2	22	0517 060 12	15-13	10	0517 080 25	7-4	38
0494 606 12	5-15[B]	12	0517 060 16	5-6	14	0517 080 25	15-12	8
0494 606 16	6-4	5	0517 060 16	6-2	26	0517 080 25	15-16	12
0494 606 25	5-15	11	0517 060 16	9-1	33	0517 080 25	15-17	18
0494 608 10	7-3	3	0517 060 16	9-2	20	0517 080 30	8-1	11
0494 608 12	5-2	24	0517 060 16	15-13	11	0517 080 30	15-1	33
0494 608 40	6-2	50	0517 060 16	15-15	25	0517 080 30	15-16	13
0494 610 24	5-15	12	0517 060 20	7-4	39	0517 080 35	8-1	12
0494 651 75	1-4	1	0517 060 20	9-1	47	0517 080 35	8-2	18
0494 808 15	5-2	17	0517 060 20	9-1	47	0517 080 35	15-17	17
0497 035 00	8-7	3-1	0517 060 20	9-2	39	0517 080 40	8-2	19

https://truckmanualshub.com/

部品番号順索引

PARTS INDEX

55V4

PARTS No.	Sh No.	KEY No.	PARTS No.	Sh No.	KEY No.	PARTS No.	Sh No.	KEY No.
0517 080 40	15-16	14	0518 100 55	15-3	23	0550 120 20	11-4	36
0517 080 50	4-3	13	0518 120 25	5-6	11	0550 120 25	4-4[A]	65
0517 080 50	8-2	17	0518 120 40	8-4[A]	7	0551 080 60	7-4	17
0517 080 55	15-16	15	0519 080 20	6-2	45	0551 080 60	15-16	17
0517 081 15	9-2	5	0519 080 25	5-3	1	0552 080 20	9-1	2-3
0518 100 16	9-1	31	0519 080 25	8-4[A]	9	0555 100 20	5-6	9
0518 100 20	4-1	27	0519 080 55	16-2	13	0555 100 40	15-5	5
0518 100 20	4-4	43	0520 100 20	8-2	8	0555 120 20	11-1	33
0518 100 20	4-4[A]	43	0520 100 20	11-4	20	0555 120 35	1-1	25
0518 100 20	4-4[B]	43	0520 100 40	11-4	19	0555 120 40	8-4	4
0518 100 20	7-2	13	0520 100 70	15-1	62	0555 140 35	1-1	10
0518 100 20	7-4	40	0520 100 70	15-2	9	0555 140 40	0-0	21
0518 100 20	8-2	4	0520 100 70	15-3	13	0555 140 40	11-3	6
0518 100 20	9-2	50	0520 100 70	16-1	32	0555 160 30	7-2	11
0518 100 20	12-1	4	0521 060 00	9-1	9	0555 160 30	11-1	26
0518 100 20	15-1	17	0521 060 00	15-13	12	0555 160 30	11-2	9
0518 100 20	15-3	17	0521 080 00	6-2	47	0555 160 35	2-1	6
0518 100 20	15-9	11	0521 080 00	7-1	60	0555 160 35	11-2	19
0518 100 20	15-15	24	0521 080 00	7-2	16	0555 160 40	1-7	10
0518 100 20	16-5	5	0521 080 00	7-4	16	0555 160 40	3-1	2
0518 100 20	16-6	8	0521 080 00	8-2	20	0555 160 50	8-4	2
0518 100 25	4-1	50	0521 080 00	8-5	5	0555 160 50	8-4[A]	5
0518 100 25	4-4	64	0521 080 00	9-1	2-4	0555 160 50	15-5	7
0518 100 25	4-4[A]	64	0521 080 00	16-2	18	0555 160 65	1-1	9
0518 100 25	4-4[B]	64	0524 100 00	4-1	31	0555 160 70	2-1	7
0518 100 25	6-1	10	0524 100 00	6-4	23	0555 160 80	2-1	8
0518 100 25	6-2	1	0524 100 00	7-4	49	0555 161 30	8-6	4
0518 100 25	6-3	20	0524 100 00	11-2	16	0555 241 00	8-6	3
0518 100 25	8-1	22	0524 100 00	15-17	23	0558 120 25	7-2	31
0518 100 25	8-2	3	0528 050 16	6-4	3	0558 120 30	7-1	16
0518 100 25	9-1	30	0535 100 00	7-2	15	0558 160 30	12-1	1
0518 100 25	9-2	12	0535 120 00	11-1	32	0561 080 08	5-9	21
0518 100 25	15-1	13	0541 120 16	9-1	29	0561 080 08	5-10	22
0518 100 25	15-3	14	0544 060 00	9-1	10	0561 080 08	5-11	20
0518 100 30	4-3	18	0544 080 00	15-1	57	0561 100 10	5-8	27
0518 100 30	8-2	50	0544 100 00	5-4	77	0561 100 10	5-12	22
0518 100 40	7-1	51	0548 120 00	6-2	30	0561 100 10	5-15	10
0518 100 40	15-2	10	0549 140 00	6-1	18	0561 100 20	5-4	78
0518 100 40	15-3	15	0550 060 30	16-5	4	0562 050 14	5-15[B]	3
0518 100 45	15-1	14	0550 060 50	16-1	34	0562 060 16	16-3	11
0518 100 45	15-3	22	0550 080 20	8-5	4	0562 060 18	5-4	20
0518 100 50	15-1	15	0550 080 70	7-4	36	0562 060 20	5-2	30
0518 100 50	15-3	16	0550 100 20	8-1	23	0562 060 35	15-2	18
0518 100 50	16-1	33	0550 100 20	8-2	5	0562 060 35	16-3	12
0518 100 55	15-1	16	0550 100 20	16-2	12	0562 060 50	5-4	65

https://truckmanualshub.com/

部品番号順索引

PARTS INDEX

55V4

PARTS No.	Sh No.	KEY No.	PARTS No.	Sh No.	KEY No.	PARTS No.	Sh No.	KEY No.
0562 060 50	5-13	19	0590 060 00	6-4	15	0593 100 00	7-4	42
0562 080 16	5-14	10	0590 060 00	15-15	30	0593 100 00	8-1	25
0562 080 16	5-15	8	0590 060 00	16-1	36	0593 100 00	8-2	32
0562 080 25	5-2	10	0590 060 00	16-5	7	0593 100 00	11-4	26
0562 080 25	5-15	9	0590 080 00	7-4	37	0593 100 00	16-2	16
0562 080 30	5-1	57	0590 080 00	8-1	18	0593 120 00	4-4[A]	66
0562 100 25	5-2	12	0590 080 00	15-3	32	0593 120 00	7-2	19
0562 120 25	5-1	51	0590 080 00	15-16	20	0593 120 00	15-11	6
0562 120 35	4-1	29	0590 100 00	5-6	12	0594 060 00	6-2	7
0562 140 40	7-3	5	0590 100 00	7-2	21	0594 060 00	8-2	30
0562 140 45	7-3	4	0590 100 00	7-3	11	0594 060 00	9-2	10
0565 030 20	16-7	8	0590 100 00	7-4	43	0594 060 00	16-7	10
0565 040 08	6-3	17	0590 100 00	8-1	24	0595 100 00	1-7	13
0565 040 08	16-7	7	0590 100 00	8-2	6	0595 100 00	4-1	51
0565 040 10	15-13	4	0590 100 00	11-3	12	0595 100 00	15-5	6
0565 040 12	6-2	37	0590 100 00	11-4	25	0595 120 00	1-1	24
0565 040 12	15-15	32	0590 100 00	16-2	17	0595 120 00	1-3	23
0565 040 20	6-4	11	0590 120 00	4-1	32	0595 120 00	4-1	33
0565 050 10	15-13	7	0590 120 00	4-4[A]	67	0595 120 00	7-1	17
0565 050 10	15-17	16	0590 120 00	7-2	20	0595 120 00	7-2	17
0565 060 25	6-2	6	0590 120 00	9-1	34	0595 120 00	7-3	14
0567 040 08	5-14	5	0590 120 00	11-1	40	0595 120 00	8-4	6
0580 030 00	16-7	9	0590 160 00	2-1	4	0595 120 00	11-4	37
0580 050 00	7-4	24	0590 160 00	7-2	18	0595 140 00	1-1	11
0580 050 00	15-13	8	0591 080 00	15-1	55	0595 160 00	1-1	8
0580 060 00	6-4	16	0593 040 00	6-4	12	0595 160 00	1-7	12
0580 060 00	16-5	6	0593 040 00	9-2	9	0595 160 00	3-1	3
0580 080 00	5-4	69	0593 040 00	15-13	5	0595 160 00	8-4	5
0580 120 00	4-1	28	0593 040 00	15-15	33	0595 160 00	8-4[A]	8
0580 120 00	7-2	14	0593 040 00	16-7	11	0595 160 00	8-6	6
0580 120 00	15-11	4	0593 050 00	15-17	26	0595 160 00	15-5	8
0580 140 00	6-2	36	0593 060 00	6-2	9	0595 200 00	1-1	17
0580 200 00	1-3	11	0593 060 00	6-4	7	0595 200 00	15-5	4
0585 140 00	0-0	22	0593 060 00	8-1	16	0595 240 00	8-6	5
0585 140 00	11-3	3	0593 060 00	15-15	29	0596 060 00	6-2	8
0585 200 00	15-5	3	0593 060 00	16-1	35	0596 060 00	8-2	31
0587 360 00	11-1	34	0593 080 00	6-2	28	0596 060 00	9-2	11
0590 040 00	6-4	13	0593 080 00	7-4	18	0596 060 00	16-7	12
0590 040 00	15-13	6	0593 080 00	8-1	17	0599 010 15	6-4	8
0590 040 00	15-15	34	0593 080 00	9-1	38	0599 010 15	8-1	8
0590 040 00	16-7	13	0593 080 00	15-1	58	0599 060 70	11-1	36
0590 050 00	5-15[B]	2	0593 080 00	15-3	33	0605 416 UA	2-1	2
0590 050 00	7-4	25	0593 080 00	15-16	19	0609 016 10	5-1	6
0590 050 00	15-17	27	0593 080 00	16-2	15	0609 016 10	5-8	28
0590 060 00	6-2	10	0593 100 00	1-1	20	0609 016 10	5-12	23

https://truckmanualshub.com/

部品番号順索引

PARTS INDEX

55V4

PARTS No.	Sh No.	KEY No.	PARTS No.	Sh No.	KEY No.	PARTS No.	Sh No.	KEY No.
0609 016 10	5-13	3	0653 984 02	1-5	5	0690 082 08	6-2	55
0618 116 15	6-2	18	0653 984 03	1-5	8	0690 082 08	7-4	35
0618 120 20	6-2	17	0653 984 04	1-5	1	0690 082 08	9-1	24
0630 600 44	5-2	15	0653 984 05	1-5	3	0690 082 08	15-14	8
0630 620 10	5-2	23	0653 984 06	1-5	7	0690 083 03	7-4	33
0630 620 33	15-16	10	0653 984 UA	1-1	18	0690 083 04	15-17	24
0630 620 50	1-6	2	0653 984 UA	1-5	0	0690 083 05	15-9	10
0650 001 07	11-3	2	0655 563 01	8-5	2-1	0690 083 08	4-1	22
0650 002 04	0-0	16	0655 563 02	8-5	2-2	0690 083 09	7-1	13
0650 002 04	11-3	9	0655 563 03	8-5	2-3	0690 083 12	7-1	14
0650 003 03	0-0	17	0655 563 04	8-5	2-4	0690 083 12	7-4	11
0650 003 03	11-3	8	0655 563 05	8-5	2-5	0690 083 13	4-1	36
0650 004 02	0-0	18	0655 563 10	8-5	2-6	0690 083 13	7-2	10
0650 004 02	11-3	7	0655 563 UA	8-5	2	0690 083 14	7-2	34
0651 421 UA	7-3	2	0655 564 UA	8-5	10	0690 083 14	7-4	10
0651 482 02	7-3	6	0655 567 UA	8-5	8	0690 089 36	7-2	22
0651 482 UA	7-3	1	0655 568 01	8-5	9-2	0690 201 04	8-2	9
0651 588 07	1-2	5	0655 568 UA	8-5	9	0690 201 05	6-1	20
0651 911 01	1-6	6	0655 569 01	8-5	9-3	0690 201 08	8-4	9
0651 911 02	1-6	3	0655 569 02	8-5	9-4	0690 201 08	8-4[A]	11
0651 911 03	1-6	1	0655 569 UA	8-5	9-1	0690 201 08	11-4	23
0651 911 04	1-6	5	0661 800 29	7-2	5	0690 201 09	1-1	7
0651 911 UA	1-1	15	0662 136 UA	7-2	2	0690 201 09	8-5	7
0651 911 UA	1-6	0	0668 088 02	7-1	34	0690 201 09	11-4	24
0652 253 UA	6-2	20	0668 246 02	7-1	32	0690 202 50	6-2	29
0652 274 UA	8-2	13	0668 246 06	7-1	35	0690 202 56	2-1	12
0652 923 UA	16-4	3	0668 246 15	7-1	37	0690 203 08	15-11	8
0652 965 UA	16-4	1	0668 246 91	7-1	33	0690 203 15	15-5	1
0653 010 09	1-2	13	0668 246 UA	7-1	31	0690 203 44	9-2	16
0653 010 10	1-2	11	0668 247 UA	7-4	50	0690 210 86	15-15	12
0653 779 01	1-2	12	0668 400 31	7-1	59	0690 211 05	9-2	29
0653 924 10	1-2	7	0676 253 UA	7-1	1	0690 211 08	8-2	34
0653 973 01	1-2	9	0690 016 19	8-1	7	0690 220 91	8-1	15
0653 973 02	1-2	10	0690 016 19	8-2	16	0690 220 91	8-2	22
0653 973 03	1-2	3	0690 074 12	7-1	22	0690 220 92	8-2	35
0653 973 04	1-2	1	0690 078 12	4-1	21	0690 270 29	9-2	26-2
0653 973 05	1-2	2	0690 081 89	9-1	39	0690 283 40	6-2	34
0653 973 06	1-2	4	0690 081 90	7-1	48	0690 283 41	6-2	41
0653 973 07	1-2	6	0690 081 90	7-4	34	0690 283 72	6-1	15
0653 973 08	1-2	8	0690 081 92	9-1	16	0690 283 81	6-3	13
0653 974 99	1-2	0-1	0690 082 01	9-1	18	0690 283 82	6-2	53
0653 974 UA	1-1	1-1	0690 082 05	9-1	43	0690 283 85	6-2	48
0653 974 UA	1-2	0	0690 082 05	9-1	43	0690 283 86	6-2	2
0653 981 UA	1-1	1	0690 082 07	15-15	31	0690 511 47	6-4	6
0653 984 01	1-5	4	0690 082 08	6-2	55	0699 901 12	15-11	2

https://truckmanualshub.com/

部品番号順索引

PARTS INDEX

55V4

PARTS No.	Sh No.	KEY No.	PARTS No.	Sh No.	KEY No.	PARTS No.	Sh No.	KEY No.
0699 901 13	15-11	3	0710 202 02	4-3	11	0713 439 01	5-3	6
0710 102 02	16-1	23	0710 212 12	4-1	57	0713 439 02	5-3	5
0710 106 27	11-2	13	0710 303 02	4-4	46	0713 439 07	5-3	4
0710 107 27	11-2	14	0710 303 02	4-4[A]	46	0713 439 10	5-3	2
0710 113 11	4-1	13	0710 303 02	4-4[B]	46	0713 439 UA	1-7	17
0710 113 23	4-1	53	0710 303 02	15-2	8	0713 439 UA	5-3	0
0710 113 32	4-4	38	0710 303 02	15-3	12	0713 700 02	16-2	8
0710 113 32	4-4[A]	38	0710 303 03	4-4	41	0713 700 03	1-7	7
0710 113 32	4-4[B]	38	0710 303 03	4-4[A]	41	0713 700 03	4-2	5
0710 113 32	15-2	25	0710 303 03	4-4[B]	41	0713 700 03	11-4	16
0710 113 44	1-7	18	0710 303 06	15-1	12	0713 700 03	12-2	6
0710 113 44	4-3	20	0710 303 06	15-3	21	0713 700 04	1-7	6
0710 113 44	11-4	14	0710 400 24	15-12	5	0713 700 04	4-2	15
0710 113 66	15-1	29	0710 501 03	15-9	26	0713 700 04	11-4	15
0710 114 32	15-2	26	0710 501 03	15-17	13	0713 700 04	16-1	26
0710 114 33	12-2	8	0710 503 02	1-7	24	0713 700 04	16-2	7
0710 114 44	1-7	19	0710 503 02	15-9	8	0713 700 70	4-4	2
0710 114 44	4-2	14	0710 503 02	15-17	14	0713 700 70	4-4[A]	2
0710 114 66	4-1	43	0710 503 03	15-9	24	0713 700 70	4-4[B]	2
0710 114 88	4-1	45	0710 600 13	15-9	25	0713 700 70	6-1	7
0710 117 02	4-4	37	0710 600 13	15-17	10	0713 700 70	6-3	7
0710 117 02	4-4[A]	37	0710 707 02	1-7	23	0713 700 70	15-1	45
0710 117 02	4-4[B]	37	0710 707 04	1-7	22	0713 700 70	15-3	37
0710 117 02	6-3	6	0710 709 02	4-4	8	0713 700 71	4-4	36
0710 121 00	4-4[B]	69	0710 709 02	4-4[A]	8	0713 700 71	4-4[A]	36
0710 121 00	6-3	19	0710 709 02	4-4[B]	8	0713 700 71	4-4[B]	36
0710 121 00	15-1	53	0710 713 09	4-4	3	0713 700 72	15-1	25
0710 122 02	12-2	9	0710 713 09	4-4[A]	3	0713 700 73	4-1	16
0710 122 09	4-1	55	0710 713 09	4-4[B]	3	0713 700 73	15-1	27
0710 122 09	4-4	6	0710 713 09	15-2	11	0713 700 74	4-1	15
0710 122 09	4-4[A]	6	0710 713 10	4-1	17	0713 700 77	4-3	22
0710 122 09	4-4[B]	6	0712 310 33	15-1	61	0713 700 78	4-2	10
0710 122 09	6-1	8	0712 310 33	15-3	26	0713 700 78	11-4	40
0710 122 09	6-3	8	0712 310 40	4-4	69	0713 700 78	12-2	12
0710 122 09	15-1	63	0712 310 40	16-1	24	0713 700 93	15-3	38
0710 122 09	15-1	63	0712 310 50	4-4[B]	72	0713 700 94	4-1	14
0710 122 09	15-2	28	0712 310 50	16-1	28	0713 704 02	1-7	21
0710 122 09	16-2	9	0712 310 55	4-1	19	0713 704 03	15-17	11
0710 122 10	15-4	4	0712 325 02	4-4	68	0713 705 02	16-1	27
0710 127 06	4-1	42	0712 325 02	4-4[B]	71	0719 804 UA	15-12	4
0710 200 10	5-3	13	0712 326 01	4-4[B]	66	0719 805 UA	1-7	20
0710 200 14	5-3	14	0713 100 02	11-2	14-1	0719 805 UA	4-4	7
0710 201 01	1-4	7	0713 431 02	5-3	9	0719 805 UA	4-4[A]	7
0710 201 01	1-5	9	0713 431 91	0-0	24	0719 805 UA	4-4[B]	7
0710 201 01	5-1	7	0713 431 91	5-3	7	0725 004 UA	15-1	18

https://truckmanualshub.com/

部品番号順索引

PARTS INDEX

55V4

PARTS No.	Sh No.	KEY No.	PARTS No.	Sh No.	KEY No.	PARTS No.	Sh No.	KEY No.
0728 111 15	2-1	9	0753 101 09	5-4	49	0756 339 05	5-4	13
0728 111 15	5-8	7	0753 265 UA	0-0	1	0756 339 08	5-4	16
0728 111 15	5-9	7	0753 265 UA	1-3	5	0756 339 17	5-4	31
0728 111 15	5-10	7	0753 563 53	5-1	52	0756 339 20	5-4	27
0728 111 15	5-12	3	0753 563 63	5-1	42	0756 339 25	5-4	61
0728 111 15	11-1	27	0753 636 19	5-2	13	0756 339 80	5-4	44
0728 111 15	11-2	8	0753 638 11	5-1	28	0756 357 03	5-13	15
0728 111 15	16-4	12	0753 713 05	5-1	2	0756 611 13	5-5	12
0728 111 55	5-12	7	0753 764 40	5-1	34	0756 735 09	5-5	2
0728 111 65	5-9	3	0753 764 41	5-1	36	0756 735 15	5-5	7
0728 111 65	5-10	3	0753 764 49	5-1	64	0756 744 11	5-5	11
0728 111 65	5-11	6	0753 764 49	5-1	64	0756 781 14	5-15	13
0728 111 65	12-1	10	0753 764 51	5-1	45	0756 863 09	5-15	16
0728 131 11	16-4	2	0753 795 11	5-1	35	0757 606 04	5-1	3
0729 910 35	15-9	9	0753 904 11	5-4	28	0757 606 20	5-1	18
0729 910 60	7-4	4	0754 124 13	5-15	20	0757 606 29	5-1	24
0729 910 73	0-0	9	0754 805 UA	15-1	60	0757 618 20	5-2	14
0729 910 73	7-4	3	0754 805 UA	15-3	24	0757 641 92	5-2	31
0729 910 80	7-4	1	0755 142 03	0-0	3	0757 785 06	5-1	59
0745 142 UA	15-15	10	0755 142 03	5-6	10-1	0758 696 25	5-9	25
0745 265 08	0-0	6	0755 861 26	5-3	12	0758 697 06	5-10	13
0745 265 08	7-2	25-1	0756 065 11	5-14	17-1	0758 698 09	5-9	13
0745 265 09	0-0	7	0756 065 13	5-14	14	0758 698 09	5-11	12
0745 265 09	7-2	25-2	0756 094 01	5-15[B]	8	0758 850 06	5-8	13
0745 265 UA	7-2	25	0756 094 02	5-15[B]	5	0758 850 06	5-12	13
0750 198 15	5-13	16	0756 094 03	5-15[B]	4	0758 850 12	5-12	8
0751 796 24	5-9	8	0756 094 04	5-15[B]	1	0759 106 UA	0-0	2
0751 796 24	5-10	8	0756 094 05	5-15[B]	10	0759 106 UA	5-6	5
0751 901 25	5-9	22	0756 094 06	5-15[B]	9	0759 114 UA	5-6	10-2
0751 901 25	5-10	23	0756 094 07	5-15[B]	7	0759 115 UA	5-6	10
0751 901 25	5-11	21	0756 094 08	5-15[B]	6	0759 301 UA	15-4	1
0751 948 06	5-13	14	0756 094 UA	4-4[B]	67	0760 211 18	5-15	17
0751 960 03	5-1	41	0756 094 UA	5-15[B]	0	0760 212 58	5-1	37
0752 159 21	5-11	5	0756 303 07	5-5	10	0760 310 20	5-13	8
0752 164 20	5-11	18	0756 326 04	5-14	7	0760 310 25	5-13	9
0752 289 20	5-9	6	0756 326 06	5-14	17	0760 311 66	5-2	9
0752 289 20	5-10	6	0756 326 07	5-14	9	0760 312 11	5-6	8
0752 756 05	5-9	12	0756 326 08	5-14	6	0760 312 25	4-1	26
0752 756 05	5-11	11	0756 326 09	5-14	18	0760 319 10	5-4	80-1
0752 921 09	5-8	25	0756 326 10	5-14	4	0760 610 08	5-14	8
0752 922 11	5-12	20	0756 326 19	5-14	16	0760 610 09	5-4	53
0752 928 07	5-10	20	0756 326 20	5-14	3	0760 610 11	5-4	75
0752 935 04	5-8	12	0756 326 22	5-14	1	0760 610 11	5-4	75
0752 935 04	5-12	12	0756 326 23	5-14	2	0760 610 15	5-4	63
0752 941 06	5-9	19	0756 326 25	5-14	13	0760 615 70	5-4	21

https://truckmanualshub.com/

部品番号順索引

PARTS INDEX

55V4

PARTS No.	Sh No.	KEY No.	PARTS No.	Sh No.	KEY No.	PARTS No.	Sh No.	KEY No.
0760 615 85	5-3	8	0760 710 16	15-2	27	0760 715 85	5-11	13
0760 710 07	5-1	38	0760 710 16	15-4	7	0760 715 90	5-8	17
0760 710 07	5-4	59	0760 710 16	15-17	15	0760 715 90	5-11	15
0760 710 07	5-7	9	0760 710 19	1-7	8	0760 715 95	5-8	16
0760 710 08	5-1	58	0760 710 19	4-1	48	0760 716 00	5-12	14
0760 710 08	5-4	42-1	0760 710 19	4-2	13	0760 716 05	5-12	16
0760 710 08	5-7	13	0760 710 19	4-3	12	0760 716 10	5-2	21
0760 710 08	5-13	10	0760 710 19	5-2	33	0760 716 25	5-2	20
0760 710 09	5-2	32	0760 710 19	5-4	79-1	0760 716 90	5-1	23
0760 710 10	5-1	40	0760 710 19	7-3	9	0761 721 20	7-3	8
0760 710 10	5-4	34	0760 710 19	11-4	17	0762 120 09	5-4	54
0760 710 12	1-7	25	0760 710 19	12-2	11	0762 120 11	5-4	50
0760 710 12	4-1	54	0760 710 19	15-1	30	0762 120 15	5-4	64
0760 710 12	4-4	4	0760 710 19	15-2	23	0762 120 16	5-2	28
0760 710 12	4-4[A]	4	0760 710 19	15-4	8	0762 120 50	1-3	2
0760 710 12	4-4[B]	4	0760 710 19	16-1	31	0762 120 70	5-3	11
0760 710 12	5-2	25	0760 710 19	16-2	11	0763 014 60	1-5	2
0760 710 12	5-4	32	0760 710 19	16-3	16	0763 014 67	1-4	3
0760 710 12	5-7	4	0760 710 20	5-4	35	0765 033 27	11-1	28
0760 710 12	5-13	18	0760 710 20	5-5	3	0765 033 27	16-4	11
0760 710 12	6-1	9	0760 710 20	16-3	6	0765 033 28	5-8	8
0760 710 12	6-3	9	0760 710 22	5-2	27	0765 033 28	5-11	7
0760 710 12	9-1	49	0760 710 22	16-3	2	0765 033 28	11-1	29
0760 710 12	15-1	31	0760 710 23	5-12	26	0765 033 28	12-1	9
0760 710 12	15-2	17	0760 710 24	4-1	24	0775 551 93	0-0	4
0760 710 12	15-3	39	0760 710 24	15-1	32	0775 551 93	7-1	11
0760 710 12	15-12	6	0760 710 25	4-1	47	0775 551 95	0-0	5
0760 710 12	16-1	30	0760 710 28	5-8	33	0775 551 95	7-1	12
0760 710 12	16-2	10	0760 710 28	5-9	29	0776 600 08	4-1	3
0760 710 14	5-1	56	0760 710 30	4-1	25	0776 600 11	4-1	37
0760 710 14	5-7	6	0760 710 30	5-1	44	0779 000 88	11-2	12
0760 710 16	1-7	14	0760 710 30	5-7	8	0779 002 97	7-1	24
0760 710 16	4-1	23	0760 710 40	4-1	35	0779 003 59	7-2	35
0760 710 16	4-2	7	0760 710 50	1-3	3	0779 005 37	7-2	9
0760 710 16	4-3	23	0760 710 70	5-3	10	0779 005 38	7-2	8
0760 710 16	4-4	42	0760 711 30	5-6	7	0780 162 91	5-7	1
0760 710 16	4-4[A]	42	0760 715 35	1-5	6	0780 162 92	5-7	11
0760 710 16	4-4[B]	42	0760 715 35	5-7	12	0780 162 93	5-7	14
0760 710 16	5-1	55	0760 715 45	1-4	4	0780 162 94	5-7	15
0760 710 16	5-1	55	0760 715 55	5-7	10	0780 162 UA	5-7	0
0760 710 16	5-2	29	0760 715 65	5-10	14	0780 162 UA	7-3	13
0760 710 16	5-4	66-1	0760 715 70	5-10	16	0780 440 10	5-8	19
0760 710 16	5-7	7	0760 715 75	5-7	3	0781 133 02	5-1	5
0760 710 16	11-4	18	0760 715 75	5-9	14	0781 133 07	5-1	11
0760 710 16	12-2	5	0760 715 80	5-9	16	0781 133 11	5-1	19

https://truckmanualshub.com/

部品番号順索引

PARTS INDEX

55V4

PARTS No.	Sh No.	KEY No.	PARTS No.	Sh No.	KEY No.	PARTS No.	Sh No.	KEY No.
0781 133 17	5-1	31	0781 375 22	5-1	49	0782 602 UA	11-1	4
0781 173 08	5-1	43	0782 173 04	5-10	17	0782 603 02	5-11	4
0781 173 10	5-1	50	0782 185 23	5-9	24	0782 603 UA	5-11	0
0781 238 20	5-1	13	0782 372 95	5-1	39	0782 603 UA	11-2	2
0781 250 02	5-2	8	0782 380 03	5-11	8	0782 604 02	5-8	5
0781 250 96	5-2	7	0782 380 05	5-11	14	0782 604 03	5-8	9
0781 261 01	5-2	6	0782 380 07	5-11	19	0782 604 04	5-8	20
0781 261 03	5-2	3	0782 380 91	0-0	28	0782 604 05	5-8	22
0781 261 92	5-2	1	0782 380 91	5-11	10	0782 604 07	5-8	29
0781 261 94	5-2	2	0782 380 93	5-11	16	0782 604 93	5-8	23
0781 261 95	5-2	4	0782 396 03	5-10	9	0782 604 UA	5-8	0
0781 261 96	5-2	22	0782 396 04	5-10	12	0782 604 UA	11-1	41
0781 261 97	5-2	18	0782 396 05	5-10	15	0782 605 08	5-8	31
0781 313 92	5-2	16	0782 396 07	5-10	21	0782 605 09	5-8	6
0781 372 01	5-1	4	0782 396 13	5-10	10	0782 606 02	5-9	5
0781 372 02	5-1	8	0782 396 91	0-0	27	0782 606 03	5-9	9
0781 372 03	5-1	9	0782 396 91	5-10	11	0782 606 UA	5-9	0
0781 372 04	5-1	10	0782 396 93	5-10	18	0782 606 UA	11-1	3
0781 372 05	5-1	12	0782 399 05	5-9	15	0782 608 02	5-12	5
0781 372 06	5-1	14	0782 399 12	5-9	20	0782 608 03	5-12	9
0781 372 07	5-1	15	0782 401 06	5-9	26	0782 608 04	5-12	15
0781 372 08	5-1	16	0782 401 93	5-9	17	0782 608 06	5-12	19
0781 372 09	5-1	17	0782 431 21	5-12	28	0782 608 07	5-12	24
0781 372 10	5-1	20	0782 438 15	5-9	23	0782 608 08	5-12	6
0781 372 11	5-1	22	0782 438 93	0-0	26	0782 608 91	0-0	29
0781 372 12	5-1	27	0782 438 93	5-9	11	0782 608 91	5-12	11
0781 372 13	5-1	29	0782 440 08	5-8	15	0782 608 93	5-12	17
0781 372 14	5-1	30	0782 440 11	5-8	21	0782 608 UA	5-12	0
0781 372 15	5-1	33	0782 440 13	5-8	18	0782 608 UA	12-1	6
0781 372 16	5-1	46	0782 440 17	5-8	26	0782 619 06	5-8	30
0781 372 17	5-1	47	0782 440 27	5-8	35	0782 619 06	5-9	27
0781 372 18	5-1	61	0782 440 93	0-0	25	0783 637 16	5-15	15
0781 372 19	5-1	62	0782 440 93	5-8	11	0783 637 19	5-15	18
0781 372 20	5-1	63	0782 446 03	5-9	10	0783 637 20	5-15	19
0781 372 91	5-1	1	0782 446 03	5-11	9	0783 646 83	5-4	66
0781 372 92	5-1	53	0782 446 05	5-12	25	0783 646 84	5-4	79
0781 372 93	5-1	21	0782 446 06	5-8	34	0783 646 85	5-4	74
0781 372 94	5-1	32	0782 446 06	5-12	27	0783 677 01	5-4	68
0781 372 96	5-1	60	0782 491 09	5-8	32	0783 677 02	5-4	12
0781 372 UA	1-1	12	0782 491 09	5-9	28	0783 677 03	5-4	14
0781 372 UA	5-1	0	0782 492 04	5-8	10	0783 677 04	5-4	15
0781 373 91	5-2	11	0782 492 04	5-12	10	0783 677 05	5-4	26
0781 373 92	5-2	26	0782 498 13	5-12	21	0783 677 06	5-4	19
0781 373 UA	3-1	1	0782 602 02	5-10	5	0783 677 07	5-4	22
0781 373 UA	5-2	0	0782 602 UA	5-10	0	0783 677 09	5-4	24

https://truckmanualshub.com/

部品番号順索引

PARTS INDEX

55V4

PARTS No.	Sh No.	KEY No.	PARTS No.	Sh No.	KEY No.	PARTS No.	Sh No.	KEY No.
0783 677 10	5-4	25	0783 951 15	5-13	25	0784 047 13	16-3	10
0783 677 13	5-4	30	0783 951 16	5-13	26	0784 112 04	5-15	1
0783 677 14	5-4	33	0783 951 17	5-13	27	0784 112 06	5-15	2
0783 677 15	5-4	36	0783 951 18	5-13	28	0784 112 07	5-15	3
0783 677 16	5-4	37	0783 951 91	5-13	29	0784 112 08	5-15	4
0783 677 18	5-4	41	0783 964 01	5-5	5	0784 112 09	5-15	5
0783 677 21	5-4	60	0783 964 UA	4-4	1	0784 112 10	5-15	6
0783 677 22	5-4	62	0783 964 UA	4-4[A]	1	0784 112 11	5-15	7
0783 677 23	5-4	58	0783 964 UA	4-4[B]	1	0784 112 20	5-15	14
0783 677 24	5-4	45	0783 964 UA	5-5	0	0784 112 UA	4-4[A]	69
0783 677 26	5-4	47	0783 965 02	5-14	11	0784 112 UA	5-15	0
0783 677 27	5-4	52	0783 965 03	5-14	11-1	0784 113 UA	4-4[A]	69-1
0783 677 28	5-4	48	0783 965 04	5-14	19	0785 118 UA	16-1	1
0783 677 29	5-4	57	0783 965 11	5-14	15	0785 169 UA	15-1	59
0783 677 30	5-4	56	0783 965 UA	5-14	0	0785 171 UA	15-3	36
0783 677 31	5-4	67	0783 965 UA	6-3	11	0785 606 UA	5-4	74-1
0783 677 83	5-4	42	0783 965 UA	15-1	46	0785 607 UA	5-4	74-2
0783 677 83	16-3	18	0783 970 01	5-4	38	0785 947 UA	4-1	11
0783 700 08	5-5	4	0783 974 03	5-4	17	0786 988 UA	15-2	24
0783 700 09	5-5	6	0783 974 04	5-4	39	0787 047 04	16-3	1
0783 700 10	5-5	14	0783 974 95	5-4	8	0787 047 08	16-3	5
0783 700 12	5-5	9	0783 995 01	5-13	22	0787 047 16	16-3	13
0783 749 01	5-4	55	0783 995 UA	5-13	0	0787 047 17	16-3	14
0783 749 02	5-4	46	0783 995 UA	6-1	11	0787 047 18	16-3	15
0783 756 01	5-5	13	0784 015 85	5-4	80	0787 047 91	16-3	17
0783 771 03	5-5	8	0784 015 86	5-4	72	0787 047 UA	16-2	1
0783 771 07	5-5	1	0784 015 87	5-4	71	0787 047 UA	16-3	0
0783 842 02	5-4	18	0784 015 88	5-4	70	0787 305 UA	5-6	13
0783 846 83	5-4	43	0784 015 90	5-4	1	0790 000 02	1-7	15
0783 846 85	16-3	19	0784 015 91	5-4	2	0820 023 16	15-9	5
0783 846 88	5-4	73	0784 015 92	5-4	3	0820 023 18	15-15	8
0783 920 06	5-13	17	0784 015 93	5-4	4	0820 023 19	15-15	7
0783 936 01	5-13	11	0784 015 94	5-4	5	0820 067 03	6-2	52
0783 951 01	5-13	1	0784 015 95	5-4	6	0820 067 03	6-3	18
0783 951 02	5-13	2	0784 015 96	5-4	7	0820 067 03	9-1	25
0783 951 03	5-13	4	0784 015 97	5-4	9	0820 067 03	15-13	13
0783 951 04	5-13	5	0784 015 98	5-4	10	0820 067 04	7-1	23
0783 951 05	5-13	6	0784 015 99	5-4	11	0820 067 04	9-1	46
0783 951 06	5-13	7	0784 015 UA	4-1	38	0820 067 04	15-1	39
0783 951 08	5-13	12	0784 015 UA	5-4	0	0820 067 04	15-12	7
0783 951 09	5-13	13	0784 047 06	16-3	3	0820 067 04	15-16	2
0783 951 10	5-13	20	0784 047 07	16-3	4	0820 067 04	15-17	35
0783 951 11	5-13	21	0784 047 10	16-3	7	0820 067 04	16-6	5
0783 951 13	5-13	23	0784 047 11	16-3	8	0820 067 05	1-7	16
0783 951 14	5-13	24	0784 047 12	16-3	9	0820 067 05	4-4	45

https://truckmanualshub.com/

部品番号順索引

PARTS INDEX

55V4

PARTS No.	Sh No.	KEY No.	PARTS No.	Sh No.	KEY No.	PARTS No.	Sh No.	KEY No.
0820 067 05	4-4[A]	45	0820 657 08	15-5	15	0858 308 23	16-7	2
0820 067 05	4-4[B]	45	0820 803 01	6-4	19	0858 314 11	15-14	10
0820 067 05	6-1	29	0820 803 03	7-1	21	0858 314 12	15-14	11
0820 067 05	6-3	24	0820 803 04	7-4	48	0858 314 15	6-2	21
0820 067 05	7-1	26	0820 803 04	15-17	34	0858 314 33	9-2	36
0820 067 05	9-1	26	0820 803 05	15-4	3	0858 314 34	15-9	19
0820 067 05	9-2	22	0820 803 05	15-17	31	0858 314 35	9-2	40
0820 067 05	11-2	17	0820 803 06	15-9	18	0858 501 16	9-1	48
0820 067 05	15-1	34	0820 803 06	15-17	32	0858 601 16	16-1	9
0820 067 05	15-9	15	0830 107 06	9-1	42-4	0858 601 16	16-2	21
0820 067 05	16-1	37	0830 107 07	9-1	42-5	0858 614 05	9-2	31
0820 067 07	6-2	38	0830 107 08	9-1	42-6	0858 614 12	6-4	9
0820 067 09	4-4	61	0830 107 09	9-1	42-7	0860 504 02	16-7	14
0820 067 09	4-4[A]	61	0830 107 10	9-1	42-8	0861 001 02	9-1	3
0820 067 09	4-4[B]	61	0830 107 11	9-1	42-2	0877 900 11	16-7	1
0820 067 09	9-2	49	0830 107 12	9-1	42-3	0879 551 30	9-1	13
0820 067 09	15-2	19	0830 291 01	9-1	12-1	0881 100 UA	16-5	1
0820 067 09	15-3	34	0830 406 02	9-2	21	0881 509 UA	9-2	1
0820 067 10	4-2	6	0830 408 00	15-5	14	0891 802 UA	6-4	1
0820 067 10	4-3	25	0850 500 10	15-5	13	0891 922 UA	6-4	18
0820 067 10	4-4	62	0851 000 01	9-1	5	0892 270 UA	15-15	1
0820 067 10	4-4[A]	62	0851 000 02	9-1	5-1	0893 508 UA	15-13	1
0820 067 10	4-4[B]	62	0852 119 22	9-1	28	0893 509 UA	9-2	38
0820 067 10	7-2	33	0854 060 01	16-6	12	0897 002 UA	15-16	22
0820 067 10	11-4	41	0854 523 01	15-14	4-1	0897 018 UA	15-16	3
0820 067 31	9-1	27	0854 523 06	15-14	4-2	0897 019 UA	15-16	21
0820 069 03	16-6	6	0854 523 UA	15-14	4	0898 000 00	15-17	8
0820 215 07	0-0	13	0854 529 01	9-1	2-2	0898 000 01	15-16	23
0820 215 07	6-4	24	0854 529 05	9-1	2-1	0898 000 02	15-15	9
0820 215 07	9-2	34	0854 529 UA	9-1	2	0898 000 03	15-15	14
0820 215 07	15-15	11	0854 536 01	15-14	1-1	0898 000 04	15-15	15
0820 215 10	0-0	10	0854 536 11	15-14	1-2	0898 000 05	15-15	13
0820 215 10	9-1	41	0854 536 UA	15-14	1	0898 000 68	15-17	1
0820 215 11	0-0	11	0857 011 48	15-12	2	0898 000 69	15-17	2
0820 215 11	9-1	35	0857 011 57	9-2	45	0898 000 70	15-17	3
0820 513 UA	6-2	54	0857 056 03	15-9	1	0898 000 71	15-17	4
0820 514 UA	6-2	51	0857 909 UA	7-4	23	0910 101 19	15-16	6
0820 650 20	16-6	13	0857 914 11	0-0	8	0910 870 05	7-1	30
0820 650 20	16-7	15	0857 914 11	7-4	54-1	0910 870 05	8-1	21
0820 650 21	16-6	14	0857 914 UA	7-4	54	0910 870 05	8-2	59
0820 650 21	16-7	16	0858 140 01	9-1	42-1	0910 870 05	8-2	59
0820 651 20	16-6	13-1	0858 180 10	15-12	3	0910 911 00	11-1	42
0820 651 20	16-7	15-1	0858 306 03	0-0	12	0910 931 10	7-1	10
0820 651 21	16-6	14-1	0858 306 03	9-2	26	0910 942 02	15-9	16
0820 651 21	16-7	16-1	0858 306 04	9-2	26-1	0931 070 24	10-1	5

https://truckmanualshub.com/

部品番号順索引

PARTS INDEX

55V4

PARTS No.	Sh No.	KEY No.	PARTS No.	Sh No.	KEY No.	PARTS No.	Sh No.	KEY No.
0931 109 25	10-1	2	4012000210	15-8	64	4016000006	15-6	8
0931 301 04	10-1	6	4012000215	15-8	49	4016000007	15-6	9
0931 331 10	10-1	4	4012000216	15-7	45	4016000008	15-6	10
0931 370 10	10-1	3-1	4012000239	15-7	12	4016000009	15-6	11
0931 370 11	10-1	3	4012000240	15-8	23	4016000010	15-6	12
0931 371 01	10-1	3-2	4012000245	15-7	46	4016000011	15-6	13
0933 054 UA	16-7	3	4012000250	15-7	40	4016000012	15-6	14
3034212018	15-6	0	4012000251	15-7	38	4016000013	15-6	15
3034212018	15-7	0	4012000252	15-7	39	4016000014	15-6	16
3034212018	15-8	0	4012000254	15-7	41	4016000015	15-6	17
3034212019	15-6	0-1	4012000255	15-7	42	4016000016	15-6	18
3034212019	15-7	0-1	4012000256	15-7	43	4016000017	15-6	19
3034212019	15-8	0-1	4012000257	15-6	50	4016000018	15-6	20
3442505	15-6	35	4012000259	15-6	53	4016000019	15-6	21
4003 003 00	4-1	30	4012000260	15-6	47	4016000020	15-6	22
4003 021 01	7-2	7	4012000274	15-7	32	4016000021	15-6	23
4004 022 04	9-1	7	4012000291	15-7	13	4016000022	15-6	23-1
4004 128 00	1-3	15	4012000297	15-7	20	4016000023	15-6	24
4004 280 01	15-15	28	4012000303	15-7	28	4016000024	15-6	25
4004 364 01	6-2	5	4012000314	15-7	33	4016000025	15-6	28
4004 364 01	8-2	29	4012000316	15-7	34	4016000026	15-6	28-1
4004 364 01	9-2	7	4012000352	15-8	62	4016000027	15-6	29
4004 364 01	16-7	6	4012000356	15-7	18	4016000028	15-6	29-1
4006 119 01	7-1	25	4012000367	15-7	24	4016000029	15-6	30
4006 119 01	8-4[A]	10	4012000370	15-8	17	4016000029	15-8	28
4006 119 01	15-16	18	4012000390	15-6	36	4016000030	15-6	32
4006 119 02	9-1	37	4012000428	15-8	36	4016000031	15-6	33
4006 119 02	9-2	52	4012 220 00	1-4	8	4016000033	15-6	38
4006 178 00	11-1	35	4013001417	15-6	45	4016000033	15-7	3
4006 386 00	8-4[A]	12	4013001418	15-6	46	4016000033	15-8	63
4006 540 56	11-1	38	4013001426	15-6	34	4016000033	15-8	63
4006 540 57	11-1	38-1	4013001437	15-8	60	4016000034	15-6	40
4006 540 66	11-1	37	4013001438	15-8	59	4016000035	15-6	41
4006 540 66	11-2	11	4013001450	15-8	47	4016000035	15-7	2
4006 540 67	11-1	37-1	4015000088	15-6	26	4016000036	15-6	42
4006 540 67	11-2	11-1	4015000091	15-6	37	4016000037	15-6	43
4007 308 00	11-3	14	4015000091	15-8	35	4016000038	15-6	44
4012000138	15-6	49	4015000092	15-6	27	4016000039	15-6	51
4012000185	15-6	39	4015000109	15-6	48	4016000040	15-6	52
4012000185	15-7	27	4016000000	15-6	2	4016000041	15-6	54
4012000185	15-8	22	4016000001	15-6	3	4016000042	15-7	1
4012000186	15-8	21	4016000002	15-6	4	4016000043	15-7	4
4012000189	15-8	52	4016000003	15-6	5	4016000044	15-7	5
4012000206	15-6	31	4016000004	15-6	6	4016000045	15-7	6
4012000206	15-8	37	4016000005	15-6	7	4016000046	15-7	7

https://truckmanualshub.com/

部品番号順索引

PARTS INDEX

55V4

PARTS No.	Sh No.	KEY No.	PARTS No.	Sh No.	KEY No.	PARTS No.	Sh No.	KEY No.
4016000047	15-7	8	4016000091	15-8	27	4070 102 31	15-17	7
4016000048	15-7	9	4016000092	15-8	30	4070 102 40	15-9	6
4016000049	15-7	10	4016000093	15-8	31	4070 102 41	15-9	7
4016000050	15-7	11	4016000094	15-8	32	4070 102 44	15-17	5
4016000051	15-7	14	4016000095	15-8	33	4070 102 45	15-17	6
4016000052	15-7	15	4016000096	15-8	34	4070 124 09	4-4	17
4016000053	15-7	16	4016000097	15-8	38	4070 124 09	4-4[A]	17
4016000054	15-7	17	4016000098	15-8	40	4070 124 09	4-4[B]	17
4016000054	15-8	39	4016000099	15-8	41	4070 245 32	7-4	30
4016000055	15-7	19	4016000100	15-8	42	4070 245 39	7-4	28
4016000056	15-7	21	4016000101	15-8	43	4070 245 67	7-4	29
4016000057	15-7	22	4016000102	15-8	44	4070 351 03	4-2	8
4016000058	15-7	23	4016000103	15-8	45	4070 351 03	11-4	38
4016000059	15-7	25	4016000104	15-8	46	4070 390 03	4-3	24
4016000060	15-7	26	4016000105	15-8	48	4070 548 01	6-3	4
4016000061	15-7	29	4016000106	15-8	50	4070 548 04	6-1	6
4016000062	15-7	30	4016000107	15-8	51	4070 548 06	4-4	55
4016000063	15-7	31	4016000108	15-8	53	4070 548 06	4-4[A]	55
4016000064	15-7	35	4016000109	15-8	54	4070 548 06	4-4[B]	55
4016000065	15-7	36	4016000110	15-8	55	4070 548 06	6-1	4
4016000066	15-7	37	4016000111	15-8	56	4070 548 06	6-3	5
4016000067	15-7	44	4016000112	15-8	57	4070 548 08	4-4	58
4016000068	15-7	47	4016000113	15-8	58	4070 548 08	4-4[A]	58
4016000069	15-8	1	4016000114	15-8	61	4070 548 08	4-4[B]	58
4016000070	15-8	2	4016000115	15-8	65	4070 548 13	15-1	43
4016000071	15-8	3	4016000116	15-8	66	4070 548 16	15-1	38
4016000072	15-8	4	4016 030 04	6-2	23	4070 548 18	15-1	42
4016000073	15-8	5	4016 030 04	8-2	21	4070 548 19	4-4	57
4016000074	15-8	6	4017 252 01	16-4	7	4070 548 19	4-4[A]	57
4016000075	15-8	7	4040 468 02	11-1	23	4070 548 19	4-4[B]	57
4016000076	15-8	8	4040 468 16	11-1	22	4070 548 19	6-3	3
4016000077	15-8	9	4040 468 21	11-1	20	4070 548 19	15-1	36
4016000078	15-8	10	4040 867 00	6-2	16	4070 548 21	4-4	34
4016000079	15-8	11	4043 229 07	11-1	18	4070 548 21	4-4[A]	34
4016000080	15-8	12	4043 231 02	16-4	8	4070 548 21	4-4[B]	34
4016000081	15-8	13	4043 231 12	11-1	19	4070 548 21	6-1	3
4016000082	15-8	14	4043 231 12	16-4	10	4070 548 25	4-4	53
4016000083	15-8	15	4043 261 03	16-4	9	4070 548 25	4-4[A]	53
4016000084	15-8	16	4043 376 01	12-1	11	4070 548 25	4-4[B]	53
4016000085	15-8	18	4047 035 02	1-4	5	4070 548 27	15-1	37
4016000086	15-8	19	4070 013 07	4-1	7	4070 548 27	16-1	16
4016000087	15-8	20	4070 015 14	4-1	9	4070 548 35	4-4	31
4016000088	15-8	24	4070 015 26	1-7	4	4070 548 35	4-4[A]	31
4016000089	15-8	25	4070 026 44	4-1	6	4070 548 35	4-4[B]	31
4016000090	15-8	26	4070 056 32	15-4	2	4070 548 36	6-3	10

https://truckmanualshub.com/

部品番号順索引

PARTS INDEX

55V4

PARTS No.	Sh No.	KEY No.	PARTS No.	Sh No.	KEY No.	PARTS No.	Sh No.	KEY No.
4070 548 39	4-4	32	4070 548 89	6-1	2	4072 887 00	5-6	3
4070 548 39	4-4[A]	32	4070 551 01	4-4	15	4072 930 01	16-1	25
4070 548 39	4-4[B]	32	4070 551 01	4-4[A]	15	4072 930 02	16-1	38
4070 548 39	6-3	2	4070 551 01	4-4[B]	15	4072 971 00	4-2	11
4070 548 40	4-4	23	4070 551 14	15-2	16	4072 971 00	11-4	22
4070 548 40	4-4[A]	23	4070 551 15	4-4	49	4072 971 00	15-1	26
4070 548 40	4-4[B]	23	4070 551 15	4-4[A]	49	4077 036 00	5-6	4
4070 548 41	4-4	30	4070 551 15	4-4[B]	49	4079 027 00	5-6	6
4070 548 41	4-4[A]	30	4070 551 18	1-7	5	4080 000 02	9-1	23
4070 548 41	4-4[B]	30	4070 551 18	15-1	40	4080 000 02	11-2	15
4070 548 41	15-1	35	4070 551 19	4-4	20	4080 000 02	16-6	7
4070 548 42	4-4	26	4070 551 19	4-4[A]	20	4080 000 03	6-4	22
4070 548 42	4-4[A]	26	4070 551 19	4-4[B]	20	4080 000 03	9-1	22
4070 548 42	4-4[B]	26	4070 551 22	4-4	16	4080 000 04	9-1	21
4070 548 50	15-1	41	4070 551 22	4-4[A]	16	4080 000 05	7-4	55
4070 548 55	16-1	17	4070 551 22	4-4[B]	16	4080 000 05	9-1	45
4070 548 57	4-4	22	4070 551 22	6-1	1	4080 000 06	4-1	20
4070 548 57	4-4[A]	22	4070 551 34	4-4	14	4080 000 06	9-1	20
4070 548 57	4-4[B]	22	4070 551 34	4-4[A]	14	4080 000 06	11-4	12
4070 548 57	6-3	1	4070 551 34	4-4[B]	14	4080 000 09	4-4	60
4070 548 61	4-4	29	4070 551 43	4-4	18	4080 000 09	4-4[A]	60
4070 548 61	4-4[A]	29	4070 551 43	4-4[A]	18	4080 000 09	4-4[B]	60
4070 548 61	4-4[B]	29	4070 551 43	4-4[B]	18	4080 000 14	11-4	13
4070 548 61	15-3	29	4070 551 45	4-4	47	4080 000 25	4-4	44
4070 548 65	4-4	33	4070 551 45	4-4[A]	47	4080 000 26	15-17	25
4070 548 65	4-4[A]	33	4070 551 45	4-4[B]	47	4080 000 29	7-4	32
4070 548 65	4-4[B]	33	4070 572 51	7-4	27	4080 000 29	15-3	35
4070 548 68	4-4	21	4070 572 52	7-4	53	4081 116 00	11-4	11
4070 548 68	4-4[A]	21	4070 740 01	15-15	23	4081 118 00	15-2	6
4070 548 68	4-4[B]	21	4070 754 14	4-1	8	4081 118 00	15-3	8
4070 548 69	4-4	25	4070 754 25	15-1	24	4081 118 00	16-1	4
4070 548 69	4-4[A]	25	4070 782 06	4-4	40	4081 189 00	15-3	9
4070 548 69	4-4[B]	25	4070 782 06	4-4[A]	40	4096 033 00	15-1	50
4070 548 70	4-4	35	4070 782 06	4-4[B]	40	4123 040 00	0-0	19
4070 548 70	4-4[A]	35	4070 782 22	15-3	30	4123 040 00	11-3	10
4070 548 70	4-4[B]	35	4070 842 16	16-1	12	4123 041 00	0-0	20
4070 548 82	4-4	24	4070 842 28	16-1	14	4123 041 00	11-3	5
4070 548 82	4-4[A]	24	4070 842 29	16-1	15	4170 126 00	1-3	13
4070 548 82	4-4[B]	24	4070 842 33	16-1	13	4401 631 00	1-3	21
4070 548 88	4-4	27	4070 854 11	15-2	20	4405 307 01	4-4	32-1
4070 548 88	4-4[A]	27	4070 899 04	7-4	31	4405 307 01	4-4[A]	32-1
4070 548 88	4-4[B]	27	4072 220 00	15-9	20	4405 307 01	4-4[B]	32-1
4070 548 89	4-4	28	4072 220 00	15-17	12	4405 307 02	4-4	31-1
4070 548 89	4-4[A]	28	4072 769 00	4-3	21	4405 307 02	4-4[A]	31-1
4070 548 89	4-4[B]	28	4072 866 02	16-1	29	4405 307 02	4-4[B]	31-1

https://truckmanualshub.com/

部品番号順索引

PARTS INDEX

55V4

PARTS No.	Sh No.	KEY No.	PARTS No.	Sh No.	KEY No.	PARTS No.	Sh No.	KEY No.
4405 307 03	4-4	56-1	4405 310 04	4-4[B]	53-1	4409 625 11	9-1	8
4405 307 03	4-4[A]	56-1	4405 311 01	4-4	25-1	4416 063 01	9-1	6
4405 307 03	4-4[B]	56-1	4405 311 01	4-4[A]	25-1	4420 525 00	1-4	2
4405 307 04	4-4	55-1	4405 311 01	4-4[B]	25-1	4435 636 00	11-3	13
4405 307 04	4-4[A]	55-1	4405 311 02	4-4	23-1	4447 229 00	8-7[E]	21
4405 307 04	4-4[B]	55-1	4405 311 02	4-4[A]	23-1	4447 229 00	15-10[E]	21
4405 307 04	15-3	27-1	4405 311 02	4-4[B]	23-1	4447 479 00	8-7	7
4405 308 01	4-4	18-1	4405 312 01	4-4	58-1	4447 479 00	15-10	7
4405 308 01	4-4[A]	18-1	4405 312 01	4-4[A]	58-1	4447 653 00	8-7	36
4405 308 01	4-4[B]	18-1	4405 312 01	4-4[B]	58-1	4447 653 00	15-10	36
4405 308 02	4-4	33-1	4405 312 02	4-4	26-1	4447 857 00	8-7[A]	33
4405 308 02	4-4[A]	33-1	4405 312 02	4-4[A]	26-1	4447 857 00	15-10[A]	33
4405 308 02	4-4[B]	33-1	4405 312 02	4-4[B]	26-1	4447 874 00	8-7	35
4405 308 03	4-4	54-1	4405 318 01	11-4	34-1	4447 874 00	15-10	35
4405 308 03	4-4[A]	54-1	4405 318 02	11-4	33-1	4447 925 00	8-7[D]	26
4405 308 03	4-4[B]	54-1	4405 319 01	11-4	31-1	4447 925 00	15-10[D]	26
4405 308 03	15-2	14-1	4405 319 02	11-4	32-1	4447 996 00	8-7[C]	26
4405 308 04	4-4	57-1	4405 320 01	11-4	30-1	4447 996 00	15-10[C]	26
4405 308 04	4-4[A]	57-1	4405 320 02	11-4	35-1	4448 350 00	8-7[E]	26
4405 308 04	4-4[B]	57-1	4405 451 00	8-7[D]	8	4448 350 00	15-10[E]	26
4405 309 01	4-4	29-1	4405 451 00	15-10[D]	8	4448 474 00	8-7[A]	35
4405 309 01	4-4[A]	29-1	4405 456 00	8-7[D]	21	4448 474 00	15-10[A]	35
4405 309 01	4-4[B]	29-1	4405 456 00	15-10[D]	21	4448 511 00	8-7[D]	27
4405 309 02	4-4	28-1	4405 457 00	8-7[B]	4	4448 511 00	15-10[D]	27
4405 309 02	4-4[A]	28-1	4405 457 00	8-7[D]	4	4448 542 00	8-7[C]	27
4405 309 02	4-4[B]	28-1	4405 457 00	8-7[E]	4	4448 542 00	15-10[C]	27
4405 309 03	4-4	50-1	4405 457 00	8-7[F]	4	4448 562 00	8-7[B]	27
4405 309 03	4-4[A]	50-1	4405 457 00	15-10[B]	4	4448 562 00	15-10[B]	27
4405 309 03	4-4[B]	50-1	4405 457 00	15-10[D]	4	4448 573 00	8-7[B]	21
4405 309 04	4-4	52-1	4405 457 00	15-10[E]	4	4448 573 00	15-10[B]	21
4405 309 04	4-4[A]	52-1	4405 457 00	15-10[F]	4	4448 584 00	8-7[B]	8
4405 309 04	4-4[B]	52-1	4406 458 00	8-7[A]	8	4448 584 00	15-10[B]	8
4405 309 04	15-3	28-1	4406 458 00	15-10[A]	8	4448 587 00	8-7[B]	26
4405 310 01	4-4	34-1	4406 710 00	8-7[C]	21	4448 587 00	15-10[B]	26
4405 310 01	4-4[A]	34-1	4406 710 00	15-10[C]	21	4448 598 00	8-7[F]	21
4405 310 01	4-4[B]	34-1	4406 714 00	8-7[C]	8	4448 598 00	15-10[F]	21
4405 310 02	4-4	30-1	4406 714 00	15-10[C]	8	4448 603 00	8-7[F]	8
4405 310 02	4-4[A]	30-1	4407 035 00	8-7	22	4448 603 00	15-10[F]	8
4405 310 02	4-4[B]	30-1	4407 035 00	8-7[A]	21	4448 607 00	8-7[F]	26
4405 310 03	4-4	51-1	4407 035 00	15-10	22	4448 607 00	15-10[F]	26
4405 310 03	4-4[A]	51-1	4407 035 00	15-10[A]	21	4448 619 00	8-7[F]	27
4405 310 03	4-4[B]	51-1	4407 974 00	8-7[A]	4	4448 619 00	15-10[F]	27
4405 310 03	15-2	15-1	4407 974 00	8-7[C]	4	4448 651 00	8-7[A]	32
4405 310 04	4-4	53-1	4407 974 00	15-10[A]	4	4448 651 00	15-10[A]	32
4405 310 04	4-4[A]	53-1	4407 974 00	15-10[C]	4	4448 687 00	8-7[C]	25

https://truckmanualshub.com/

部品番号順索引

PARTS INDEX

55V4

PARTS No.	Sh No.	KEY No.	PARTS No.	Sh No.	KEY No.	PARTS No.	Sh No.	KEY No.
4448 687 00	15-10[C]	25	5988 004 32	0-0	42	D040 381 00	15-16	9
4448 944 00	8-7[D]	25	5988 004 33	0-0	42-1	D042 040 00	6-2	33
4448 944 00	15-10[D]	25	5988 009 00	0-0	40	D043 030 00	11-2	6
4448 987 00	4-4[B]	44	5988 022 01	0-0	44	D043 110 00	11-1	39
4449 003 00	8-7[B]	25	D002 015 00	2-1	5	D043 115 00	11-2	7
4449 003 00	15-10[B]	25	D003 073 00	7-2	6	D047 003 00	11-2	18
4449 406 00	8-7[F]	25	D004 049 02	6-2	46	D047 058 00	11-1	25
4449 406 00	15-10[F]	25	D006 032 00	8-6	7	D047 058 00	11-2	10
4450 505 00	10-1	1	D006 038 00	8-6	8	D047 058 00	12-1	2
4457 535 00	9-2	27	D006 051 00	0-0	23	D060 028 00	4-4[A]	70
4459 598 00	7-2	23	D006 051 00	11-3	4	D060 032 00	12-2	7
4460 756 00	1-1	3	D006 136 00	8-2	7	D060 071 00	4-2	9
4460 756 00	2-1	10	D006 144 00	7-1	8	D060 071 00	11-4	39
4461 932 00	1-1	19	D007 023 00	8-2	24	D060 071 00	12-2	10
4475 590 00	1-1	23	D007 034 02	8-2	25	D060 137 00	4-4	67
4475 591 00	1-1	22	D007 060 00	1-1	26	D060 137 00	4-4[B]	70
4485 508 00	1-3	12	D007 240 01	7-1	49	D060 137 00	15-2	7
4485 509 00	1-3	14	D007 240 02	7-1	50	D060 137 00	15-3	10
4497 989 00	15-1	49	D007 244 01	16-2	6	D060 137 00	16-1	22
4511 501 01	0-0	15	D007 244 02	16-2	6-1	D060 164 00	16-1	21
4511 501 01	11-1	24	D007 244 03	16-2	6-2	D060 408 00	4-3	10
4514 549 00	1-3	4	D013 094 00	16-4	6	D060 451 00	11-4	9
4515 506 00	1-3	1	D013 384 00	6-1	25	D060 500 00	15-1	10
4522 707 01	15-14	9	D013 398 01	11-1	15	D060 500 00	15-3	20
4550 519 00	8-3	27	D013 408 00	0-0	14	D060 503 00	4-3	19
4550 718 00	7-1	57	D013 408 00	11-1	16	D060 503 00	15-2	22
4550 726 00	8-2	11	D013 409 00	11-1	17	D060 511 00	15-1	28
4550 726 00	15-9	13	D013 444 00	16-4	5	D060 512 00	15-4	5
4550 873 00	8-2	12	D017 225 00	6-2	15	D060 514 00	4-1	12
4550 906 25	15-5	11	D017 234 01	12-1	3	D060 525 00	4-4	9
4550 906 26	15-5	12	D017 234 02	11-1	12	D060 525 00	4-4[A]	9
4580 016 00	4-4	63	D017 234 03	11-2	3	D060 525 00	4-4[B]	9
4580 016 00	4-4[A]	63	D017 234 04	11-1	11	D060 526 00	4-1	52
4580 016 00	4-4[B]	63	D017 234 05	11-2	5	D060 530 00	4-1	41
4580 730 00	1-7	9	D017 237 01	11-1	13	D060 531 00	4-1	18
4591 982 18	9-1	11	D017 237 02	11-1	14	D060 532 00	4-1	40
0518 100 20	1-1	6	D017 249 00	11-1	10	D060 533 00	4-1	44
5290105300	15-6	1-1	D017 254 01	12-1	8	D060 534 00	4-1	46
5300 759 99	1-3	10	D017 259 00	11-2	4	D060 535 00	4-3	9
5301 231 00	1-3	0	D032 017 00	15-16	8	D060 540 00	4-3	17
5301 232 02	1-3	0-1	D040 178 00	6-2	35	D065 093 00	4-4	11
5388 510 00	10-1	0	D040 192 04	11-1	21	D065 093 00	4-4[A]	11
0555 200 30	1-1	16	D040 249 07	4-3	15	D065 093 00	4-4[B]	11
5988 004 06	0-0	41	D040 345 00	4-4[A]	68	D065 094 00	4-4	19
5988 004 09	0-0	41-1	D040 346 00	6-4	10	D065 094 00	4-4[A]	19

https://truckmanualshub.com/

部品番号順索引

PARTS INDEX

55V4

PARTS No.	Sh No.	KEY No.	PARTS No.	Sh No.	KEY No.	PARTS No.	Sh No.	KEY No.
D065 094 00	4-4[B]	19	D070 410 03	15-2	15	D236 021 00	1-4	6
D070 119 01	4-1	5	D070 553 00	7-1	47	D257 110 00	12-1	7
D070 195 03	16-1	20	D070 572 01	4-1	10	D260 329 00	16-5	8
D070 195 17	16-1	19	D070 574 00	7-4	2	D260 381 00	15-11	7
D070 195 21	16-1	18	D070 577 01	4-4	59	D260 516 00	1-7	1
D070 195 22	15-3	28	D070 577 01	4-4[A]	59	D260 518 00	15-16	5
D070 348 02	12-2	3	D070 577 01	4-4[B]	59	D260 552 00	8-1	6
D070 349 01	12-2	4	D070 578 01	4-3	7	D270 154 00	11-3	1-5
D070 350 05	1-7	2	D070 578 02	4-3	8	D270 155 00	11-3	1-3
D070 350 06	1-7	3	D070 605 00	4-1	56	D270 156 00	11-3	1-1
D070 350 06	4-3	6	D080 100 00	7-2	32	D270 157 00	11-3	1-2
D070 350 10	4-3	14	D081 023 00	15-1	9	D270 158 00	11-3	1
D070 350 11	4-3	5	D081 023 00	15-3	19	D270 159 00	11-3	1-4
D070 351 05	11-4	7-1	D081 193 00	15-1	7	D270 161 00	11-3	1-6
D070 351 15	11-4	8	D081 193 00	15-3	7	D284 229 00	7-4	22
D070 351 26	11-4	7	D081 193 00	16-1	5	D284 241 00	5-6	1
D070 351 29	11-4	8-1	D081 195 00	15-1	8	D286 202 00	11-4	2
D070 360 02	4-3	4	D081 195 00	15-3	18	D286 240 00	15-1	1
D070 360 02	15-2	21	D082 034 00	15-1	4	D286 241 00	15-1	2
D070 361 02	15-2	12	D082 034 00	15-3	4	D286 242 00	15-2	1
D070 361 03	15-2	13	D082 034 00	16-1	6	D286 243 00	15-2	2
D070 362 10	12-2	1	D082 108 00	15-2	5	D286 244 00	15-3	1
D070 362 11	12-2	2	D082 108 00	15-3	6	D286 245 00	15-3	2
D070 362 12	4-2	4	D082 109 00	15-2	4	D286 277 00	4-1	1
D070 362 14	4-2	3	D082 109 00	15-3	5	D286 305 00	16-1	7
D070 363 04	4-2	2	D082 110 00	15-1	6	D286 306 00	16-1	8
D070 363 19	4-2	1	D082 111 00	15-1	5	D286 339 00	16-2	2
D070 363 25	15-1	22	D083 152 00	7-4	5	D286 344 00	5-6	2
D070 372 01	15-1	3	D083 154 00	4-3	1	D286 345 00	11-4	1
D070 373 02	15-3	3	D131 046 00	11-3	15	D286 347 00	4-1	2
D070 373 04	15-2	3	D131 100 00	15-16	7	D400 273 00	8-1	14
D070 385 06	11-4	33	D170 052 00	6-2	19	D400 273 00	8-2	23
D070 385 07	11-4	34	D181 002 00	6-3	14	D401 498 00	4-1	34
D070 385 08	11-4	35	D204 356 00	2-1	1	D405 059 00	8-7[E]	27
D070 385 09	11-4	30	D206 825 00	7-4	12	D405 059 00	15-10[E]	27
D070 385 10	15-1	23	D206 835 00	8-6	1	D405 091 00	8-7[A]	3-1
D070 386 03	11-4	31	D206 836 00	8-6	2	D405 091 00	8-7[B]	3
D070 386 04	11-4	32	D206 873 00	8-4[A]	2	D405 091 00	8-7[C]	3
D070 387 02	15-1	21	D206 875 00	8-4	7	D405 091 00	8-7[D]	3
D070 388 01	11-4	4	D206 906 00	8-2	26	D405 091 00	8-7[E]	3
D070 388 01	16-1	10	D210 131 00	11-1	1	D405 091 00	8-7[F]	3
D070 388 09	11-4	3	D215 225 00	11-1	2	D405 091 00	8-7[G]	3
D070 388 12	11-4	5	D215 235 00	11-1	2-1	D405 091 00	15-10[A]	3-1
D070 388 16	11-4	6	D230 059 00	7-3	10	D405 091 00	15-10[B]	3
D070 388 22	16-1	11	D234 037 00	1-1	13	D405 091 00	15-10[C]	3

https://truckmanualshub.com/

部品番号順索引

PARTS INDEX

55V4

PARTS No.	Sh No.	KEY No.	PARTS No.	Sh No.	KEY No.	PARTS No.	Sh No.	KEY No.
D405 091 00	15-10[D]	3	D405 366 00	8-7[A]	13	D405 503 00	15-10[C]	16
D405 091 00	15-10[E]	3	D405 366 00	8-7[B]	13	D405 503 00	15-10[D]	16
D405 091 00	15-10[F]	3	D405 366 00	8-7[C]	13	D405 503 00	15-10[E]	16
D405 091 00	15-10[G]	3	D405 366 00	8-7[D]	13	D405 503 00	15-10[F]	16
D405 094 00	8-7	3	D405 366 00	8-7[E]	13	D405 503 00	15-10[G]	16
D405 094 00	8-7[A]	3	D405 366 00	8-7[F]	13	D405 504 00	8-7[A]	18
D405 094 00	15-10	3	D405 366 00	8-7[G]	13	D405 504 00	8-7[B]	18
D405 094 00	15-10[A]	3	D405 366 00	15-10[A]	13	D405 504 00	8-7[C]	18
D405 097 00	8-7[A]	24	D405 366 00	15-10[B]	13	D405 504 00	8-7[D]	18
D405 097 00	8-7[B]	29	D405 366 00	15-10[C]	13	D405 504 00	8-7[E]	18
D405 097 00	8-7[C]	29	D405 366 00	15-10[D]	13	D405 504 00	8-7[F]	18
D405 097 00	8-7[D]	29	D405 366 00	15-10[E]	13	D405 504 00	8-7[G]	18
D405 097 00	8-7[E]	29	D405 366 00	15-10[F]	13	D405 504 00	15-10[A]	18
D405 097 00	8-7[F]	29	D405 366 00	15-10[G]	13	D405 504 00	15-10[B]	18
D405 097 00	8-7[G]	29	D405 373 00	8-7	21	D405 504 00	15-10[C]	18
D405 097 00	15-10[A]	24	D405 373 00	15-10	21	D405 504 00	15-10[D]	18
D405 097 00	15-10[B]	29	D405 424 00	8-7	14	D405 504 00	15-10[E]	18
D405 097 00	15-10[C]	29	D405 424 00	15-10	14	D405 504 00	15-10[F]	18
D405 097 00	15-10[D]	29	D405 447 00	4-4[A]	44	D405 504 00	15-10[G]	18
D405 097 00	15-10[E]	29	D405 449 00	8-7	20	D405 505 00	8-7[A]	12
D405 097 00	15-10[F]	29	D405 449 00	15-10	20	D405 505 00	8-7[B]	12
D405 097 00	15-10[G]	29	D405 450 00	8-7	11	D405 505 00	8-7[C]	12
D405 256 00	8-7[E]	25	D405 450 00	15-10	11	D405 505 00	8-7[D]	12
D405 256 00	15-10[E]	25	D405 451 00	8-7	18	D405 505 00	8-7[E]	12
D405 272 00	4-4	65	D405 451 00	15-10	18	D405 505 00	8-7[F]	12
D405 272 00	4-4[B]	65	D405 452 00	8-7	15	D405 505 00	8-7[G]	12
D405 272 00	8-4	8	D405 452 00	15-10	15	D405 505 00	15-10[A]	12
D405 323 00	8-7[A]	20	D405 453 00	15-10	26	D405 505 00	15-10[B]	12
D405 323 00	15-10[A]	20	D405 454 00	8-7	12	D405 505 00	15-10[C]	12
D405 332 00	8-7	16	D405 454 00	15-10	12	D405 505 00	15-10[D]	12
D405 332 00	15-10	16	D405 455 00	8-7	13	D405 505 00	15-10[E]	12
D405 359 00	8-7[A]	15	D405 455 00	15-10	13	D405 505 00	15-10[F]	12
D405 359 00	8-7[B]	15	D405 462 00	8-7	17	D405 505 00	15-10[G]	12
D405 359 00	8-7[C]	15	D405 462 00	15-10	17	D405 506 00	8-7[A]	19
D405 359 00	8-7[D]	15	D405 463 00	8-7	19	D405 506 00	8-7[B]	19
D405 359 00	8-7[E]	15	D405 463 00	15-10	19	D405 506 00	8-7[C]	19
D405 359 00	8-7[F]	15	D405 503 00	8-7[A]	16	D405 506 00	8-7[D]	19
D405 359 00	8-7[G]	15	D405 503 00	8-7[B]	16	D405 506 00	8-7[E]	19
D405 359 00	15-10[A]	15	D405 503 00	8-7[C]	16	D405 506 00	8-7[F]	19
D405 359 00	15-10[B]	15	D405 503 00	8-7[D]	16	D405 506 00	8-7[G]	19
D405 359 00	15-10[C]	15	D405 503 00	8-7[E]	16	D405 506 00	15-10[A]	19
D405 359 00	15-10[D]	15	D405 503 00	8-7[F]	16	D405 506 00	15-10[B]	19
D405 359 00	15-10[E]	15	D405 503 00	8-7[G]	16	D405 506 00	15-10[C]	19
D405 359 00	15-10[F]	15	D405 503 00	15-10[A]	16	D405 506 00	15-10[D]	19
D405 359 00	15-10[G]	15	D405 503 00	15-10[B]	16	D405 506 00	15-10[E]	19

https://truckmanualshub.com/

部品番号順索引

PARTS INDEX

55V4

PARTS No.	Sh No.	KEY No.	PARTS No.	Sh No.	KEY No.	PARTS No.	Sh No.	KEY No.
D405 506 00	15-10[F]	19	D405 510 00	15-10[B]	32	D406 032 00	8-7[A]	37
D405 506 00	15-10[G]	19	D405 510 00	15-10[C]	32	D406 032 00	8-7[B]	30
D405 507 00	8-7[A]	10	D405 510 00	15-10[D]	32	D406 032 00	8-7[C]	30
D405 507 00	8-7[B]	10	D405 510 00	15-10[E]	32	D406 032 00	8-7[D]	30
D405 507 00	8-7[C]	10	D405 510 00	15-10[F]	32	D406 032 00	8-7[E]	30
D405 507 00	8-7[D]	10	D405 510 00	15-10[G]	32	D406 032 00	8-7[F]	30
D405 507 00	8-7[E]	10	D405 511 00	8-7[A]	11	D406 032 00	8-7[G]	30
D405 507 00	8-7[F]	10	D405 511 00	8-7[B]	11	D406 032 00	15-10[A]	37
D405 507 00	8-7[G]	10	D405 511 00	8-7[C]	11	D406 032 00	15-10[B]	30
D405 507 00	15-10[A]	10	D405 511 00	8-7[D]	11	D406 032 00	15-10[C]	30
D405 507 00	15-10[B]	10	D405 511 00	8-7[E]	11	D406 032 00	15-10[D]	30
D405 507 00	15-10[C]	10	D405 511 00	8-7[F]	11	D406 032 00	15-10[E]	30
D405 507 00	15-10[D]	10	D405 511 00	8-7[G]	11	D406 032 00	15-10[F]	30
D405 507 00	15-10[E]	10	D405 511 00	15-10[A]	11	D406 032 00	15-10[G]	30
D405 507 00	15-10[F]	10	D405 511 00	15-10[B]	11	D406 490 00	8-7	5
D405 507 00	15-10[G]	10	D405 511 00	15-10[C]	11	D406 490 00	15-10	5
D405 508 00	8-7[A]	17	D405 511 00	15-10[D]	11	D406 499 01	6-1	2-1
D405 508 00	8-7[B]	17	D405 511 00	15-10[E]	11	D406 499 02	6-1	5-1
D405 508 00	8-7[C]	17	D405 511 00	15-10[F]	11	D406 499 03	6-1	3-1
D405 508 00	8-7[D]	17	D405 511 00	15-10[G]	11	D406 499 04	6-1	6-1
D405 508 00	8-7[E]	17	D405 518 00	4-4[A]	44-1	D406 504 00	8-7[A]	5
D405 508 00	8-7[F]	17	D405 559 00	8-7[B]	20	D406 504 00	15-10[A]	5
D405 508 00	8-7[G]	17	D405 559 00	15-10[B]	20	D406 550 00	8-7[D]	5
D405 508 00	15-10[A]	17	D405 571 00	8-7[D]	20	D406 550 00	15-10[D]	5
D405 508 00	15-10[B]	17	D405 571 00	15-10[D]	20	D406 554 00	8-7[C]	5
D405 508 00	15-10[C]	17	D405 575 00	8-7[C]	20	D406 554 00	15-10[C]	5
D405 508 00	15-10[D]	17	D405 575 00	15-10[C]	20	D406 558 00	8-7[B]	5
D405 508 00	15-10[E]	17	D405 587 00	8-7[E]	20	D406 558 00	15-10[B]	5
D405 508 00	15-10[F]	17	D405 587 00	15-10[E]	20	D406 562 00	8-7[F]	5
D405 508 00	15-10[G]	17	D405 594 00	8-7[F]	20	D406 562 00	15-10[F]	5
D405 509 00	8-7[A]	14	D405 594 00	15-10[F]	20	D406 565 00	8-7[E]	5
D405 509 00	8-7[B]	14	D405 857 00	16-8	1	D406 565 00	15-10[E]	5
D405 509 00	8-7[C]	14	D405 859 00	16-8	2	D406 597 00	8-7	9
D405 509 00	8-7[D]	14	D405 867 00	16-8	3	D406 597 00	15-10	9
D405 509 00	8-7[E]	14	D405 868 00	16-8	5	D406 602 00	8-7	29
D405 509 00	8-7[F]	14	D406 000 00	8-7[G]	4	D406 602 00	8-7[A]	29
D405 509 00	8-7[G]	14	D406 000 00	15-10[G]	4	D406 602 00	8-7[B]	35
D405 509 00	15-10[A]	14	D406 002 00	8-7[G]	26	D406 602 00	8-7[C]	35
D405 509 00	15-10[B]	14	D406 002 00	15-10[G]	26	D406 602 00	8-7[D]	35
D405 509 00	15-10[C]	14	D406 005 00	8-7[G]	20	D406 602 00	8-7[E]	35
D405 509 00	15-10[D]	14	D406 005 00	15-10[G]	20	D406 602 00	8-7[F]	35
D405 509 00	15-10[E]	14	D406 007 00	8-7[G]	27	D406 602 00	8-7[G]	35
D405 509 00	15-10[F]	14	D406 007 00	15-10[G]	27	D406 603 00	8-7	30
D405 509 00	15-10[G]	14	D406 012 00	8-7[G]	21	D406 603 00	8-7[A]	30
D405 510 00	15-10[A]	26	D406 012 00	15-10[G]	21	D406 603 00	8-7[B]	36

https://truckmanualshub.com/

部品番号順索引

PARTS INDEX

55V4

PARTS No.	Sh No.	KEY No.	PARTS No.	Sh No.	KEY No.	PARTS No.	Sh No.	KEY No.
D406 603 00	8-7[C]	36	D406 622 00	15-10[E]	36	D406 630 00	15-10[G]	35
D406 603 00	8-7[D]	36	D406 622 00	15-10[F]	36	D406 631 00	8-7	23
D406 603 00	8-7[E]	36	D406 622 00	15-10[G]	36	D406 631 00	15-10	23
D406 603 00	8-7[F]	36	D406 623 00	15-10	30-1	D406 720 00	8-7[G]	25
D406 603 00	8-7[G]	36	D406 623 00	15-10[A]	30-1	D406 720 00	15-10[G]	25
D406 604 00	8-7	30-1	D406 623 00	15-10[B]	36-1	D406 783 00	8-7[A]	22
D406 604 00	8-7[A]	30-1	D406 623 00	15-10[C]	36-1	D406 783 00	8-7[B]	22
D406 604 00	8-7[B]	36-1	D406 623 00	15-10[D]	36-1	D406 783 00	8-7[C]	22
D406 604 00	8-7[C]	36-1	D406 623 00	15-10[E]	36-1	D406 783 00	8-7[D]	22
D406 604 00	8-7[D]	36-1	D406 623 00	15-10[F]	36-1	D406 783 00	8-7[E]	22
D406 604 00	8-7[E]	36-1	D406 623 00	15-10[G]	36-1	D406 783 00	8-7[F]	22
D406 604 00	8-7[F]	36-1	D406 624 00	15-10	30-2	D406 783 00	8-7[G]	22
D406 604 00	8-7[G]	36-1	D406 624 00	15-10[A]	30-2	D406 783 00	15-10[A]	22
D406 605 00	8-7	30-2	D406 624 00	15-10[B]	36-2	D406 783 00	15-10[B]	22
D406 605 00	8-7[A]	30-2	D406 624 00	15-10[C]	36-2	D406 783 00	15-10[C]	22
D406 605 00	8-7[B]	36-2	D406 624 00	15-10[D]	36-2	D406 783 00	15-10[D]	22
D406 605 00	8-7[C]	36-2	D406 624 00	15-10[E]	36-2	D406 783 00	15-10[E]	22
D406 605 00	8-7[D]	36-2	D406 624 00	15-10[F]	36-2	D406 783 00	15-10[F]	22
D406 605 00	8-7[E]	36-2	D406 624 00	15-10[G]	36-2	D406 783 00	15-10[G]	22
D406 605 00	8-7[F]	36-2	D406 625 00	15-10	30-3	D406 811 00	8-7[G]	5
D406 605 00	8-7[G]	36-2	D406 625 00	15-10[A]	30-3	D406 811 00	15-10[G]	5
D406 606 00	8-7	30-3	D406 625 00	15-10[B]	36-3	D406 827 00	16-8	12
D406 606 00	8-7[A]	30-3	D406 625 00	15-10[C]	36-3	D406 930 00	15-1	51
D406 606 00	8-7[B]	36-3	D406 625 00	15-10[D]	36-3	D406 931 00	15-1	52
D406 606 00	8-7[C]	36-3	D406 625 00	15-10[E]	36-3	D407 016 00	8-7[G]	8
D406 606 00	8-7[D]	36-3	D406 625 00	15-10[F]	36-3	D407 016 00	15-10[G]	8
D406 606 00	8-7[E]	36-3	D406 625 00	15-10[G]	36-3	D407 017 00	8-7[E]	8
D406 606 00	8-7[F]	36-3	D406 626 00	15-10[A]	30-4	D407 017 00	15-10[E]	8
D406 606 00	8-7[G]	36-3	D406 627 00	15-10	30-4	D407 056 00	15-10	37
D406 607 00	8-7[A]	30-4	D406 628 00	15-10	31	D407 125 01	15-1	41-1
D406 608 00	8-7	30-4	D406 628 00	15-10[A]	31	D407 125 02	15-1	42-1
D406 609 00	8-7	31	D406 628 00	15-10[B]	37	D407 818 01	6-3	4-1
D406 609 00	8-7[A]	31	D406 628 00	15-10[C]	37	D407 818 02	6-3	5-1
D406 609 00	8-7[B]	37	D406 628 00	15-10[D]	37	D407 818 03	4-4	49-1
D406 609 00	8-7[C]	37	D406 628 00	15-10[E]	37	D407 818 03	4-4[A]	49-1
D406 609 00	8-7[D]	37	D406 628 00	15-10[F]	37	D407 818 03	4-4[B]	49-1
D406 609 00	8-7[E]	37	D406 628 00	15-10[G]	37	D407 818 04	4-4	16-1
D406 609 00	8-7[F]	37	D406 629 00	15-10	32	D407 818 04	4-4[A]	16-1
D406 609 00	8-7[G]	37	D406 630 00	15-10	29	D407 818 04	4-4[B]	16-1
D406 610 00	8-7	32	D406 630 00	15-10[A]	29	D407 819 00	9-2	19
D406 622 00	15-10	30	D406 630 00	15-10[B]	35	D407 820 00	15-9	27
D406 622 00	15-10[A]	30	D406 630 00	15-10[C]	35	D407 823 00	9-2	28
D406 622 00	15-10[B]	36	D406 630 00	15-10[D]	35	D407 829 00	9-2	32
D406 622 00	15-10[C]	36	D406 630 00	15-10[E]	35	D407 943 00	8-7	25
D406 622 00	15-10[D]	36	D406 630 00	15-10[F]	35	D407 943 00	8-7[A]	25

https://truckmanualshub.com/

部品番号順索引

PARTS INDEX

55V4

PARTS No.	Sh No.	KEY No.	PARTS No.	Sh No.	KEY No.	PARTS No.	Sh No.	KEY No.
D407 943 00	8-7[B]	31	D408 328 00	15-10	10	D408 358 00	15-10[E]	6
D407 943 00	8-7[C]	31	D408 329 00	8-7[D]	7	D408 359 00	8-7[F]	6
D407 943 00	8-7[D]	31	D408 329 00	15-10[D]	7	D408 359 00	15-10[F]	6
D407 943 00	8-7[E]	31	D408 330 00	8-7[E]	7	D408 360 00	8-7[B]	6
D407 943 00	8-7[F]	31	D408 330 00	15-10[E]	7	D408 360 00	15-10[B]	6
D407 943 00	8-7[G]	31	D408 331 00	8-7[F]	7	D408 361 00	8-7[G]	6
D407 943 00	15-10	25	D408 331 00	15-10[F]	7	D408 361 00	15-10[G]	6
D407 943 00	15-10[A]	25	D408 332 00	8-7[B]	7	D408 370 00	8-7	26
D407 943 00	15-10[B]	31	D408 332 00	15-10[B]	7	D408 370 00	8-7[A]	26
D407 943 00	15-10[C]	31	D408 333 00	8-7[G]	7	D408 370 00	8-7[B]	32
D407 943 00	15-10[D]	31	D408 333 00	15-10[G]	7	D408 370 00	8-7[C]	32
D407 943 00	15-10[E]	31	D408 334 00	8-7[C]	24	D408 370 00	8-7[D]	32
D407 943 00	15-10[F]	31	D408 334 00	15-10[C]	24	D408 370 00	8-7[E]	32
D407 943 00	15-10[G]	31	D408 335 00	8-7[D]	24	D408 370 00	8-7[F]	32
D407 963 00	9-2	42	D408 335 00	15-10[D]	24	D408 370 00	8-7[G]	32
D407 964 00	9-2	43	D408 336 00	8-7[E]	24	D408 371 00	8-7	24
D407 965 00	9-2	37	D408 336 00	15-10[E]	24	D408 371 00	8-7[A]	23
D407 966 00	9-2	46	D408 337 00	8-7[F]	24	D408 371 00	8-7[B]	23
D407 967 00	9-2	47	D408 337 00	15-10[F]	24	D408 371 00	8-7[C]	23
D407 968 00	9-2	48	D408 338 00	8-7[B]	24	D408 371 00	8-7[D]	23
D408 020 00	16-8	8	D408 338 00	15-10[B]	24	D408 371 00	8-7[E]	23
D408 021 00	16-8	7	D408 339 00	8-7[G]	24	D408 371 00	8-7[F]	23
D408 038 00	16-8	11	D408 339 00	15-10[G]	24	D408 371 00	8-7[G]	23
D408 205 00	15-15	16	D408 347 00	8-7[A]	36	D408 371 00	15-10	24
D408 229 00	8-7	34	D408 347 00	15-10[A]	36	D408 371 00	15-10[A]	23
D408 229 00	15-10	34	D408 348 00	8-7[C]	28	D408 371 00	15-10[B]	23
D408 280 00	9-2	23	D408 348 00	15-10[C]	28	D408 371 00	15-10[C]	23
D408 281 00	6-2	42	D408 349 00	8-7[D]	28	D408 371 00	15-10[D]	23
D408 285 00	9-2	41	D408 349 00	15-10[D]	28	D408 371 00	15-10[E]	23
D408 292 00	9-1	44	D408 350 00	8-7[E]	28	D408 371 00	15-10[F]	23
D408 313 00	8-7	6	D408 350 00	15-10[E]	28	D408 371 00	15-10[G]	23
D408 313 00	15-10	6	D408 351 00	8-7[F]	28	D408 375 00	8-4	11
D408 318 00	8-7	33	D408 351 00	15-10[F]	28	D408 376 00	8-4	10
D408 318 00	15-10	33	D408 352 00	8-7[B]	28	D408 379 07	16-8	9
D408 322 00	8-7[A]	34	D408 352 00	15-10[B]	28	D408 392 00	16-8	10
D408 322 00	15-10[A]	34	D408 353 00	8-7[G]	28	D408 393 00	16-8	10-1
D408 324 00	8-7	4	D408 353 00	15-10[G]	28	D408 396 00	16-8	4
D408 324 00	15-10	4	D408 354 00	8-7	37	D408 402 00	8-7	27
D408 325 00	8-7	8	D408 355 00	8-7[A]	6	D408 402 00	8-7[A]	27
D408 325 00	15-10	8	D408 355 00	15-10[A]	6	D408 402 00	8-7[B]	33
D408 326 00	8-7[A]	7	D408 356 00	8-7[C]	6	D408 402 00	8-7[C]	33
D408 326 00	15-10[A]	7	D408 356 00	15-10[C]	6	D408 402 00	8-7[D]	33
D408 327 00	8-7[C]	7	D408 357 00	8-7[D]	6	D408 402 00	8-7[E]	33
D408 327 00	15-10[C]	7	D408 357 00	15-10[D]	6	D408 402 00	8-7[F]	33
D408 328 00	8-7	10	D408 358 00	8-7[E]	6	D408 402 00	8-7[G]	33

https://truckmanualshub.com/

部品番号順索引

PARTS INDEX

55V4

PARTS No.	Sh No.	KEY No.	PARTS No.	Sh No.	KEY No.	PARTS No.	Sh No.	KEY No.
D408 402 00	15-10	27	D408 421 00	8-7[D]	2	D418 688 00	15-13	2
D408 402 00	15-10[A]	27	D408 421 00	8-7[E]	2	D418 689 00	15-13	3
D408 402 00	15-10[B]	33	D408 421 00	8-7[F]	2	D418 721 00	11-2	1
D408 402 00	15-10[C]	33	D408 421 00	8-7[G]	2	D418 756 00	11-4	10
D408 402 00	15-10[D]	33	D408 421 00	15-10[A]	2	D418 813 00	15-1	11
D408 402 00	15-10[E]	33	D408 421 00	15-10[B]	2	D418 813 00	15-3	11
D408 402 00	15-10[F]	33	D408 421 00	15-10[C]	2	D418 815 00	15-3	25
D408 402 00	15-10[G]	33	D408 421 00	15-10[D]	2	D418 836 00	7-4	13
D408 403 00	8-7	28	D408 421 00	15-10[E]	2	D418 868 00	7-2	4
D408 403 00	8-7[A]	28	D408 421 00	15-10[F]	2	D418 908 00	8-1	3
D408 403 00	8-7[B]	34	D408 421 00	15-10[G]	2	D418 909 00	8-1	4
D408 403 00	8-7[C]	34	D408 424 00	8-7[A]	9	D418 943 00	4-4	12
D408 403 00	8-7[D]	34	D408 424 00	15-10[A]	9	D418 943 00	4-4[A]	12
D408 403 00	8-7[E]	34	D408 425 00	8-7[C]	9	D418 943 00	4-4[B]	12
D408 403 00	8-7[F]	34	D408 425 00	15-10[C]	9	D418 944 00	4-4	13
D408 403 00	8-7[G]	34	D408 426 00	8-7[D]	9	D418 944 00	4-4[A]	13
D408 403 00	15-10	28	D408 426 00	15-10[D]	9	D418 944 00	4-4[B]	13
D408 403 00	15-10[A]	28	D408 427 00	8-7[E]	9	D418 945 00	8-1	20
D408 403 00	15-10[B]	34	D408 427 00	15-10[E]	9	D418 948 00	4-4	39
D408 403 00	15-10[C]	34	D408 428 00	8-7[F]	9	D418 948 00	4-4[A]	39
D408 403 00	15-10[D]	34	D408 428 00	15-10[F]	9	D418 948 00	4-4[B]	39
D408 403 00	15-10[E]	34	D408 429 00	8-7[B]	9	D418 970 00	8-2	28
D408 403 00	15-10[F]	34	D408 429 00	15-10[B]	9	D419 060 00	4-1	39
D408 403 00	15-10[G]	34	D408 430 00	8-7[G]	9	D419 122 00	4-4	66
D408 408 00	8-7	1	D408 430 00	15-10[G]	9	D419 161 00	15-14	5
D408 408 00	15-10	1	D408 436 00	8-7[C]	20-1	D419 193 00	16-1	3
D408 412 00	8-7[A]	1	D408 436 00	15-10[C]	20-1	D419 195 00	7-4	51
D408 412 00	8-7[B]	1	D408 447 00	9-2	24	D419 203 00	16-2	19
D408 412 00	8-7[C]	1	D408 637 00	16-8	6	D419 204 00	16-2	3
D408 412 00	8-7[D]	1	D414 314 00	16-5	2	D419 206 00	15-17	9
D408 412 00	8-7[E]	1	D416 701 00	15-11	1	D419 207 00	16-2	20
D408 412 00	8-7[F]	1	D416 789 00	2-1	3	D419 208 00	16-2	4
D408 412 00	8-7[G]	1	D416 915 00	15-1	48	D419 219 00	7-4	14
D408 412 00	15-10[A]	1	D417 041 00	9-1	17	D419 229 00	9-2	13
D408 412 00	15-10[B]	1	D418 139 00	6-2	44	D419 256 00	7-1	3
D408 412 00	15-10[C]	1	D418 190 00	6-2	14	D419 257 00	7-1	5
D408 412 00	15-10[D]	1	D418 302 00	6-2	12	D419 258 00	7-1	2
D408 412 00	15-10[E]	1	D418 304 00	9-2	30	D419 259 00	7-1	4
D408 412 00	15-10[F]	1	D418 455 00	15-5	2	D419 265 00	7-4	26
D408 412 00	15-10[G]	1	D418 456 00	16-6	3	D419 273 00	6-4	2
D408 417 00	8-7	2	D418 564 00	8-2	38	D419 276 00	8-2	15
D408 417 00	15-10	2	D418 583 00	4-4[B]	68	D419 286 00	6-3	22
D408 421 00	8-7[A]	2	D418 630 00	15-14	3	D419 289 00	7-2	26
D408 421 00	8-7[B]	2	D418 632 00	15-14	2	D419 294 00	7-2	3
D408 421 00	8-7[C]	2	D418 632 00	16-6	4	D419 308 00	6-2	11

https://truckmanualshub.com/

部品番号順索引

PARTS INDEX

55V4

PARTS No.	Sh No.	KEY No.	PARTS No.	Sh No.	KEY No.	PARTS No.	Sh No.	KEY No.
D419 313 00	9-1	40	D458 417 00	8-2	47	D493 463 00	8-3	19
D419 323 00	8-1	5	D458 432 00	7-1	39	D493 478 00	8-3	20
D419 342 00	6-1	24	D458 434 00	11-4	28	D493 480 00	8-3	22
D419 343 00	6-1	28	D458 436 00	8-2	39	D493 481 00	8-3	23
D419 344 00	8-5	3	D458 441 00	11-1	8	D493 482 00	8-3	24
D419 347 00	6-4	26	D458 444 00	11-4	27	D493 483 00	8-3	25
D419 349 00	15-16	4	D458 445 00	7-1	7	D493 484 00	8-3	26
D419 355 00	16-7	4-1	D458 461 00	8-2	40	D493 503 00	7-2	27
D419 356 00	16-1	2	D458 464 00	7-1	41	D493 504 00	7-2	28
D419 357 00	16-7	4	D458 468 00	8-1	29	D493 507 00	7-1	44
D419 359 00	15-15	2	D458 497 00	16-7	5	D493 516 00	8-3	44
D419 360 00	6-1	14	D458 501 00	8-2	52	D493 519 00	8-3	45
D419 370 00	15-16	24	D458 502 00	8-2	53	D493 528 00	8-3	8
D419 450 00	8-2	14	D458 503 00	7-1	62	D493 529 00	8-3	9
D419 472 00	15-9	2	D458 504 00	7-1	63	D493 530 00	8-3	10
D419 477 00	9-2	51	D458 508 00	15-15	6	D493 535 00	8-3	4
D419 490 00	4-3	16	D458 514 00	8-2	51	D493 541 00	8-3	36
D419 496 00	7-2	30	D458 515 00	8-2	58	D493 599 00	8-3	6
D419 542 00	8-1	2	D458 516 00	8-2	55	D493 600 00	8-3	7
D419 544 00	7-4	51-1	D458 568 00	8-2	54	D493 601 00	8-3	5
D419 551 00	6-1	19	D458 580 00	8-2	56	D493 614 00	7-1	55
D419 580 00	9-2	4	D458 581 00	8-2	57	D493 622 00	8-3	3
D433 496 00	7-4	9	D458 634 00	8-2	1	D493 624 00	7-1	45
D433 503 00	6-4	21	D465 313 00	9-2	14	D493 625 00	7-1	46
D433 504 00	7-4	19	D465 314 00	9-2	15	D493 626 00	15-9	21
D448 005 00	8-4[A]	1	D465 318 00	6-2	3	D493 636 00	7-4	7
D452 207 00	15-15	3	D465 319 00	6-2	4	D493 637 00	8-3	34
D455 737 00	16-5	3	D465 358 00	15-9	4	D493 638 00	8-3	2
D456 908 00	12-1	5	D465 380 00	9-2	2	D493 640 00	8-3	16
D457 127 00	16-6	9	D465 381 00	9-2	3	D493 641 00	8-3	11
D458 059 00	8-1	26	D465 382 00	15-15	4	D493 642 00	8-3	13
D458 060 00	8-1	27	D465 383 00	15-15	5	D493 643 00	8-3	14
D458 072 00	8-2	10	D470 700 00	8-4[A]	4	D493 644 00	7-4	8
D458 149 00	15-9	3	D470 805 00	8-4	1	D493 645 00	7-4	20
D458 184 00	1-1	5	D470 805 00	8-4[A]	3	D493 650 00	7-4	21
D458 236 00	8-2	33	D475 052 00	11-1	9	D493 654 00	8-3	21
D458 257 00	8-1	19	D480 009 00	6-2	43	D493 655 00	8-3	35
D458 259 00	8-1	1	D481 022 00	7-1	6	D493 656 00	8-3	42
D458 269 00	9-1	1	D490 186 00	11-1	5	D493 657 00	7-1	9
D458 274 00	7-1	40	D490 373 00	11-1	7	D493 658 00	7-1	27
D458 279 00	8-2	2	D490 374 00	11-1	6	D493 659 00	7-1	28
D458 288 00	8-1	28	D490 443 00	16-4	4	D493 660 00	7-1	43
D458 291 00	8-2	48	D493 434 00	8-3	15	D493 661 00	7-1	54
D458 411 00	7-1	38	D493 439 01	15-9	14	D493 662 00	7-1	42
D458 413 00	16-2	5	D493 462 00	8-3	18	D493 663 00	7-1	52

https://truckmanualshub.com/

部品番号順索引

PARTS INDEX

55V4

PARTS No.	Sh No.	KEY No.	PARTS No.	Sh No.	KEY No.	PARTS No.	Sh No.	KEY No.
D493 665 00	7-1	58	D551 006 02	8-2	37	F342 639 00	5-6	0
D493 667 00	8-3	38	D551 007 01	8-3	17	F342 640 00	4-4	0
D493 668 00	4-1	4	D551 008 01	8-3	40	F342 640 00	4-4[A]	0
D493 679 00	8-3	28	D551 009 01	15-15	18	F342 640 00	4-4[B]	0
D493 680 00	8-3	29	D551 009 02	15-15	19	F342 640 00	6-1	0
D493 681 00	8-3	43	D551 009 03	15-15	20	F342 640 00	6-3	0
D493 682 00	8-3	46	D551 009 04	8-2	45	F342 647 00	1-7	0
D493 684 00	8-3	41	D551 009 05	8-2	46	F342 647 00	12-2	0
D493 685 00	8-3	1	D551 009 06	8-3	30	F342 649 00	11-4	0
D493 686 00	8-3	12	D551 009 07	8-3	31	F342 651 00	4-1	0
D493 687 00	8-3	32	D551 010 01	15-15	21	F342 651 00	4-2	0
D493 689 00	8-3	33	D551 010 02	15-15	22	F342 651 00	4-3	0
D493 692 00	8-3	37	D580 163 00	11-4	29	F342 651 00	11-4	0-1
D493 693 00	8-3	39	D580 170 00	4-3	2	F342 651 00	12-2	0-1
D493 694 00	15-15	17	D580 184 00	4-3	3	F342 664 00	15-1	0
D493 696 00	8-3	48	D581 191 00	8-5	1	F342 664 00	15-2	0
D493 698 00	8-3	49	D581 203 00	8-5	1-1	F342 664 00	15-3	0
D493 699 00	8-3	50	D581 204 00	8-5	1-2	F342 676 00	15-4	0
D493 700 00	7-1	64	D581 205 00	8-5	1-3	F353 206 00	8-5	0-4
D493 721 00	8-3	47	D584 141 00	7-2	1	F354 810 00	15-6	1
D493 732 00	15-9	22	D592 161 00	15-12	1	F355 037 00	15-11	0
D493 733 00	8-3	51	D592 194 02	9-1	14	F355 102 00	9-1	0-1
D493 753 01	15-5	10	D592 195 03	9-1	15	F355 182 00	15-5	0
D493 753 02	15-5	9	D592 206 00	9-2	44	F355 183 00	8-5	0-1
D495 577 00	6-2	32	D592 285 00	9-1	42	F355 184 00	8-5	0
D495 774 00	6-2	13	D592 288 00	9-1	12	F355 185 00	8-5	0-2
D495 808 00	6-3	12	D592 290 00	6-2	39	F355 190 00	8-1	0
D495 810 00	6-4	14	D592 304 00	16-6	1	F355 190 00	8-2	0
D495 830 00	6-4	4	D592 305 00	16-6	2	F355 190 00	8-3	0
D495 838 00	6-1	12	D592 307 00	15-16	1	F355 196 00	8-5	0-3
D495 839 00	6-1	13	D592 309 00	15-9	23	F355 197 00	8-4[A]	0
D495 843 00	6-2	49	F300 686 00	1-4	0	F355 211 00	8-4	0
D501 057 00	6-1	22	F301 019 00	12-1	0	F355 221 00	8-4	0-1
D501 058 00	6-1	27	F311 358 00	2-1	0	F355 231 00	15-9	0
D501 059 00	15-1	47	F320 251 00	3-1	0	F361 697 00	6-4	0
D501 075 00	6-3	23	F320 258 00	2-1	0-1	F361 706 00	9-2	0
D501 076 00	6-1	23	F330 676 00	7-1	0	F361 707 00	9-2	0-1
D525 004 00	7-2	25-3	F330 676 00	7-2	0	F361 722 00	6-1	0-1
D528 005 00	9-2	35	F330 677 00	7-3	0	F361 722 00	6-2	0
D528 006 00	9-2	18	F330 678 00	7-1	0-1	F361 722 00	8-1	0-1
D550 019 00	4-4	48	F337 318 00	7-4	0	F361 722 00	8-2	0-1
D550 019 00	4-4[A]	48	F337 321 00	7-4	0-1	F361 722 00	8-3	0-1
D550 019 00	4-4[B]	48	F342 598 00	16-1	0	F366 201 00	16-6	11
D550 063 00	7-4	6	F342 624 00	16-2	0-1	F366 792 00	15-13	0
D551 006 01	8-2	36	F342 625 00	16-2	0	F366 821 00	9-1	0-2

https://truckmanualshub.com/

部品番号順索引

PARTS INDEX

PARTS No.	Sh No.	KEY No.
F366 879 00	16-6	0
F366 889 00	9-1	0
F370 340 00	16-5	0
F370 342 00	16-7	0
F373 220 00	8-6	0
F377 850 00	8-7	0
F377 850 00	8-7[A]	0
F377 850 00	8-7[B]	0
F377 850 00	8-7[C]	0
F377 850 00	8-7[D]	0
F377 850 00	8-7[E]	0
F377 850 00	8-7[F]	0
F377 850 00	8-7[G]	0
F377 852 00	15-10	0
F377 852 00	15-10[A]	0
F377 852 00	15-10[B]	0
F377 852 00	15-10[C]	0
F377 852 00	15-10[D]	0
F377 852 00	15-10[E]	0
F377 852 00	15-10[F]	0
F377 852 00	15-10[G]	0
F377 854 00	8-7	0-1
F377 854 00	8-7[A]	0-1
F377 854 00	8-7[B]	0-1
F377 854 00	8-7[C]	0-1
F377 854 00	8-7[D]	0-1
F377 854 00	8-7[E]	0-1
F377 854 00	8-7[F]	0-1
F377 854 00	8-7[G]	0-1
F377 855 00	15-10	0-1
F377 855 00	15-10[A]	0-1
F377 855 00	15-10[B]	0-1
F377 855 00	15-10[C]	0-1
F377 855 00	15-10[D]	0-1
F377 855 00	15-10[E]	0-1
F377 855 00	15-10[F]	0-1
F377 855 00	15-10[G]	0-1
F377 856 00	8-7	0-2
F377 856 00	15-10	0-2
F377 860 00	16-8	0
F385 394 00	15-17	0
F385 396 00	15-15	0
F385 400 00	15-16	0
F385 402 00	15-14	0
F388 254 02	11-3	0-5
F388 255 01	11-3	0-3
F388 255 02	11-3	0-1
F388 255 03	11-3	0-2
F388 255 04	11-3	0
F388 255 05	11-3	0-4
F388 256 02	11-3	0-6
F388 386 00	11-1	0
F388 388 00	4-3	0-1
F388 388 00	11-2	0
F418 128 00	16-4	0
F432 277 00	15-12	0
F771 315 00	15-16	27
K15221 4317 0	0-0	30
K15221 4317 0	7-4	56
K15694 65992	9-1	51
K15841 3901 0	0-0	38
K17490 42360	7-4	58
K1A021 6001 7	0-0	37
K1G382 9701 0	0-0	35
K1G642 72401	7-1	61
K1G924 7301 0	0-0	36
K1J002 8304 0	0-0	39
K1K533 6566 0	0-0	34
K1K574 6022 0	0-0	33
K1K574 60221	9-1	50
KHH164 3243 0	0-0	31
KR1401 5135 2	0-0	32
KR1401 5135 2	7-4	57
ZG00451	0-0	45
ZG00452	0-0	45-1
ZG00453	0-0	45-2
ZG00501	0-0	46
ZG00502	0-0	46-1
ZG00503	0-0	46-2
ZG10100	0-0	43