https://truckmanualshub.com/

TOYOTA

NEW MODEL FEATURES

ELECTRIC FORKLIFT TRUCKS

7FBMF 16,18
7FBMF 20,25
7FBMF 30,35
7FBMF 40,45,50

< Tillbaka till Servicemanual 7FBMF 16-50

Index

AUGUST 2002

Pub. No. PE313

SECTION INDEX

https://truckmanualshub.com/

NAME	SECTION
GENERAL	0
DEVELOPMENT OBJECTIVES	1
CONTROLLER	2
MULTIPLE DISPLAY	3
BATTERY	4
POWER TRAIN	5
STEERING & REAR AXLE	6
TIRES	7
OPERATOR'S COMPARTMENT	8
BODY & ACCESORIES	9
MATERIAL HANDLING & HYDRAULICS SYSTEM	10
SAS	11
MAIN OPTIONS & ATTACHMENTS	12
WIRING DIAGRAM	13

https://truckmanualshub.com/

FOREWORD

This manual mainly describes the development objectives of new Toyota forklift 7FBMF16~50 models, outlines of main component units, structures and functions of new mechanisms and other technical features.

Please read it carefully for sales and service activities.

This manual has been edited for the vehicles launched into the market in September 2002.

Any later change shall be informed through Toyota Industrial Equipment Parts & Service News.

Please refer to the repair manual and parts catalog for the matters necessary for servicing.

TOYOTA Material Handling Company
A Division of TOYOTA INDUSTRIES CORPORATION

https://truckmanualshub.com/

GENERAL

Page

VEHICLE EXTERIOR VIEWS 0-2

MODEL LINE-UP 0-3

STANDARD EQUIPMENTS 0-4

https://truckmanualshub.com/

VEHICLE EXTERIOR VIEWS

7FBMF16~35

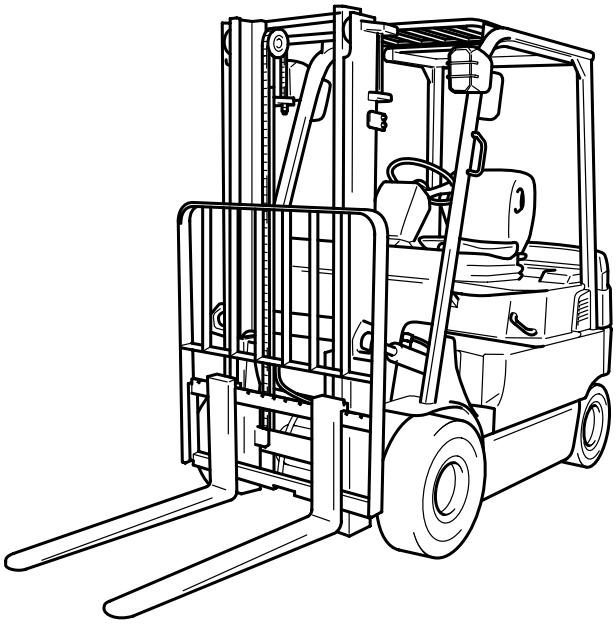

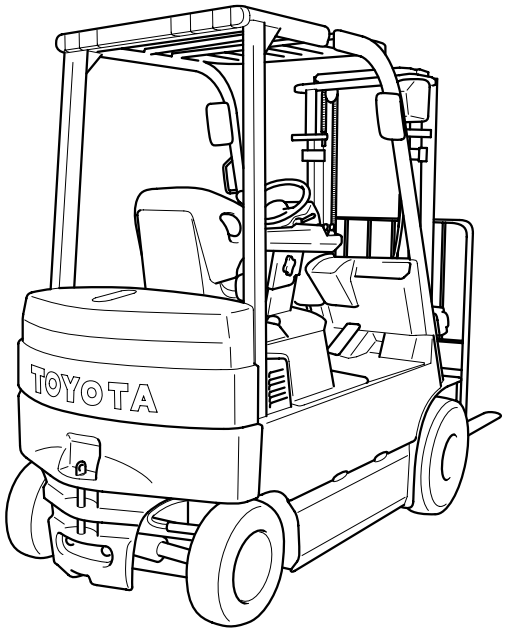

7FBMF40~50

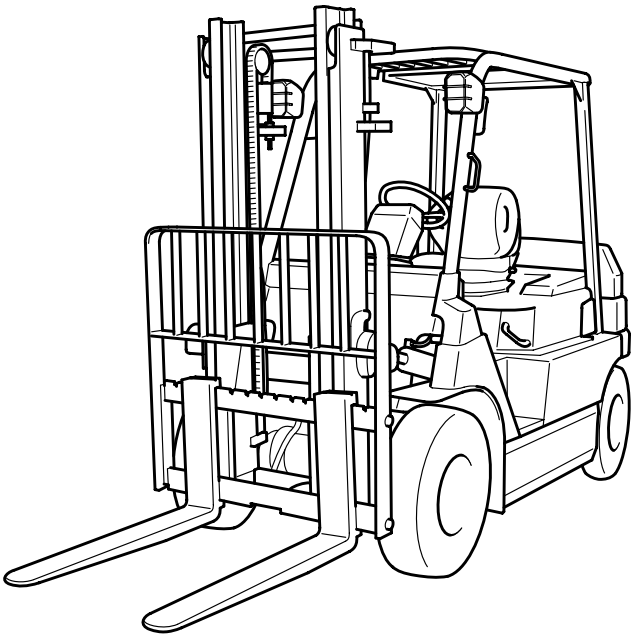

https://truckmanualshub.com/

MODEL LINE-UP

Models

	Capacity (Load Center 500 mm)	Model (80V or 72 V)	
		New	Previous
1 ton Series	1.6 ton	7FBMF16	FBMF16
	1.8 ton	7FBMF18	—
2 ton Series	2.0 ton	7FBMF20	FBMF20
	2.5 ton	7FBMF25	FBMF25
3 ton Series	3.0 ton	7FBMF30	FBMF30
	3.5 ton	7FBMF35	—
4 ton Series	4.0 ton	7FBMF40	—
	4.5 ton	7FBMF45	—
	5.0 ton	7FBMF50	—

Frame number stamping

Model	Stamping Style (Starting Number)	Stamping Location
7FBMF16	7FBMF18Ⓔ10011	Stamp on LH & upper surface of front cross plate 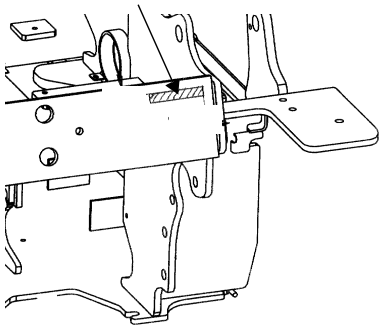
7FBMF18		
7FBMF20	7FBMF25Ⓔ10011	
7FBMF25		
7FBMF30	7FBMF35Ⓔ10011	
7FBMF35		
7FBMF40	7FBMF50Ⓔ10011	
7FBMF45		
7FBMF50		

0

https://truckmanualshub.com/

STANDARD EQUIPMENTS

○ : STD P:OPT —: Not Available

	Standard Equipment	1.6-3.5 ton	4.0-5.0 ton	Note
Electrical System	AC Power system for travelling & load handling	○	○	
	AC Power controller for steering	—	○	1.6-3.5 ton: DC system
	Multiple display (All round model)	P	P	
Chassis	SAS (System of Active Stability)	○	○	
	Wet brake system	○	○	
	Parking brake system of electric switch type	○	○	
	Full hydraulic power steering	○	○	
Body	Overhead guard	○	○	
	Memory tilt steering column	○	○	
	ORS seat	○	○	
	Floor mat	○	○	
	Battery hood damper	○	○	
	Assist grip (LH)	○	○	
	Instrument panel holder	○	○	
	Paper clamp on battery hood	○	○	
	Drawbar pin	○	○	
Load Handling System	Wide visible mast (V)	○	○	H3300 mm
	Load bucharest	○	○	H1220 mm
	Fork	○	○	1.6~1.8 ton: L800 mm 2.0~5.0 ton: L1000 mm
	Mini-lever control system	○	○	
	3-way valve (A400)	○	○	
Others	Electric horn	○	○	
	Headlight	P	P	
	Rear-view mirror	P	P	

https://truckmanualshub.com/

DEVELOPMENT OBJECTIVES

Page

DEVELOPMENT OBJECTIVES..... 1-2
FEATURES (SELLING POINTS)..... 1-3
AC POWER SYSTEM..... 1-6

https://truckmanualshub.com/

DEVELOPMENT OBJECTIVES

TOYOTA 1.6 ~ 3.0 ton FBMF 16 ~ 30 counterbalance type electric 4-wheel forklift trucks have had an established reputation as high performance forklift trucks since first their model launched in 1989.
There have been rising demands for clean electric forklift trucks with relevant to environmental concern; and further the market wants higher capacity forklift than 3.0 ton beside the existing capacity models.
Keeping these points in mind, the design concepts were established, as follows:

1. AC induction motor

Making best use of the advantages of AC induction motor drive system to respond to customer's needs for the most suitable load handling system.

2. SAS - System of Active Stability

In order to gain better stability, SAS has been developed. SAS, adopted by 7 series, has already won high confidence from the industrial truck markets.
This same level of stability will be incorporated into the new 7FBMF 16 ~ 50 models.

3. Introducing larger capacity models of 3.5 ton and over in addition to new 1 ~ 3 ton capacity models to enhance the product range.

Creation of over 3.5 ton capacity models has been undertaken together with the model changes launched for 1 ~ 3 ton capacity models.
Most of all, the AC induction drive motor system has been a pioneering endeavor having rallied our technological powers for a successful introduction in our products. Excellent features inherent to AC induction motor have been used to its full advantages with success.
Furthermore, varied demands for additional features have been implemented. Emphasis has been placed on system design development such as the mini-lever system and the wet brake system, etc.
The 7FBMF 16 ~ 50 models certainly have outstanding features compared to other forklift models. On operation, the differences are so obvious in fundamentals, performance, comfort, etc. New 7FBMF 16 ~ 50 models are commendable as an epoch in new era.

https://truckmanualshub.com/

FEATURES (SELLING POINTS)

■ Table of selling points

mfr: manufacturer
◎: Newly adopted, ○: Improved
S: STD, P: OPT, –: Not available

Selling point		Function or Item	Objective	1.5 ~ 3.5t	4.0 ~ 5.0t	mfr A	Relative page
Improved performance							
Improvement in operation hours and work cycles without an operator noticing a decline in performance	◎	Power keep function	Better performance at a low battery level	S	S	—	1-8 2-2
Availability of different power modes for different needs: H mode: High power mode P mode: Power mode S mode: Standard mode Other customized modes are available as well.	◎	Power select function	A touch on a switch selects optimum power mode.	S	S	—	1-11 2-2
		Load handling power control		S			
Improvement on operator comfort							
Improvement in ease of getting on and 0ff	○	The entry area has been widened by installing the battery under floor	Ease of getting on and off equivalent to the engine-powered model	S	S	—	1-10
Increased leg space	○		Expansion of foot space	S	S	—	1-10
Improved serviceability							
Improved serviceability	◎	AC motor	Need for servicing motor brushes is eliminated.	S	S	—	1-7
	◎	Overheat protector	Power is reduced automatically when motor is overheated.	S	S	—	2-5 5-2
	◎	AC controller	Need for servicing contactor is eliminated.	S	S	—	2-2
	◎	Thermal protector	Output is reduced automatically when controller is overheated.	S	S	—	2-5 5-2
Reduced need for servicing brake	◎	Wet brake system	Service life of brake system is prolonged	S	S	S	5-10
	◎	Regenerative system (accelerator off)	Service life of brake system is prolonged.	S	S	S	2-5
Higher safety during servicing	○	Jacking points under the counter weight and frame	Jacking points indicated for higher safety	S	S	—	9-2

https://truckmanualshub.com/

Selling point		Function or Item	Objective	1.6 ~ 3.5t	4.0 ~ 5.0t	mfrA	Relative Page
Safety							
Improved turning stability	◎	SAS-active control rear stabilizer	Rear wheel ground grip force increased when required	S	S	—	11-6
Improved material handling stability	◎	SAS-active mast function controller (front tilt angle control)	Controls front tilt angle for high lifting, etc.	S	S	—	11-10
Load collapse reduction	◎	SAS-active mast function controller (rear tilt speed control)	Controls rear tilt speed for high lifting, etc.	S	S	—	11-10
Operation error prevention for lift lever	◎	SAS-active mast function controller (key-lift interlock)	Prevents unintended fork lowering	S	S	—	11-10
Large reduction of natural drop and front tilt (1/3 of previous values)	◎	SAS-active mast function control (key-lift interlock)	Cuts off valve oil leaks when the key switch is turned OFF.	S	S	—	11-10
Easy monitoring of SAS operation status	◎	SAS-operation monitor, indicator lamp, and diagnosis	Easy recovery from SAS faults	S	S	—	3-2
Availability of maximum travel speed control		Speedometer	Large display easy to see	S	S	—	3-4
		Speed alarm	Warning is given when travel speed exceeds preset level.	P	P	—	3-5
		Speed limiter	Sets limits to travel speed	S	S	—	3-4
Improved visibility	○	High-mount rear combination lamps	Visibility of forklift truck from surrounding area	P	P	—	9-6
Forward view		Super-wide visible mast	Maintains advantages of internal width of wide mast.	S	S	—	10-2
Operability, etc.							
Easy operation	◎	SAS-active mast function control (automatic fork leveling control)	Automatically sets the mast vertical.	S	S	—	11-12
	◎	Steerage, load handling lever, accelerator pedal	Reduced operation power	S	S	—	—
	◎	Mini-lever		S	S	P	10-12
	◎	Anti roll back		S	S	S	2-5
Improved traveling stability	◎	Regenerative system (accelerator off)	Regenerative braking equivalent to engine brake	S	S	—	2-5
Smooth and quick switchback operation	◎	AC motor and AC controller	Quick switchback operation without time lag	S	S	—	2-5
Improved meter of screen	○	Multiple display	Legible display	S	S	—	3-2
Battery roll out	◎			P	P	—	12-3

https://truckmanualshub.com/

Outline of Design

■ Major differences from previous models

Item		New models	Applicable model	Previous models	Applicable model	Relative page
General	Overhead guard height	2195mm	1.6 ~ 1.8 ton	2160mm	1.6 ton	—
		2195mm	2.0 ton	2180mm	2.0 ton	
		2215mm	2.5 ton	2180mm	2.5 ton	
		2215mm	3.0 ~ 3.5 ton	2275mm	3.0 ton	
		2310mm	4.0 ~ 5.0 ton	—	—	
	Wheelbase	1420mm	1.6 ~ 1.8 ton	1360mm	1.6 ton	
		1580mm	2.0 ~ 2.5 ton	1505mm	2.0 ~ 2.5 ton	
		1725mm	3.0 ~ 3.5 ton	1650mm	3.0 ton	
		2080mm	4.0 ~ 5.0 ton	—	—	
Motor	Drive motor (72V/80V)	AC: 12.0 / 13.3 kw	1.6 ~ 1.8 ton	DC: 7.6 / 8.6 kw	1.6 ton	5-2
		AC: 15.4 / 17.1 kw	2.0 ~ 3.5 ton	DC: 10.1 / 10.6 kw	2.0 ~ 3.0 ton	
		AC: 14.9 / 16.6 kw	4.0 ~ 5.0 ton	—	—	
	Pump motor (72V/80V)	AC: 12.0 / 13.5 kw	1.6 ~ 1.8 ton	DC: 11.5 / 13.0 kw	1.6 ton	10-27
		AC: 16.9 / 18.6 kw	2.0 ~ 2.5 ton	DC: 14.8 / 17.0 kw	2.0 ~ 2.5 ton	
		AC: 16.9 / 18.6 kw	3.0 ~ 3.5 ton	DC: 16.5 / 18.5 kw	3.0 ton	
		AC: 22.8 / 25.4 kw	4.0 ~ 5.0 ton	—	—	
	PS motor (72V/80V)	DC: 1.0 / 1.1 kw	1.5 ~ 3.5 ton	DC: 1.0 / 1.1 kw	1.5 ~ 3.0 ton	10-27
		Same motor for PS as well as hydraulic oil pump	4.0 ~ 5.0 ton	—	—	
Controller	Traveling	Main controller & traveling motor driver	1.6 ~ 5.0 ton	Traveling & load handling controller	1.6 ~ 3.0 ton	Section 2, 11
	Load handling	Main controller & load handling motor driver	1.6 ~ 3.5 ton			
	SAS	Controller of SAS includes the steerage control	1.6 ~ 5.0 ton	—		
	Steerage		1.6 ~ 3.5 ton	Steerage controller	1.6 ~ 3.0 ton	
		Controller of main includes the steerage control	4.0 ~ 5.0 ton	—	—	
Brake mechanism	Main brake	Wet brake	1.6 ~ 5.0 ton	Dry brake	1.6 ~ 3.0 ton	5-10
	Parking brake	Parking brake system of electric switch type	1.6 ~ 5.0 ton	Parking brake lever of ratchet type	1.6 ~ 3.0 ton	5-13
SAS equipment	SAS specifications	SAS-active control stability	1.6 ~ 5.0 ton	—	—	11-6
		Mast function control • Front tilt angle control • Rear tilt speed control • Automatic fork leveling control • Key-lift interlock		—	—	11-10
Frame	Overhead guard Clearance	1055mm	1.6 ~ 3.5 ton	1030mm	1.6 ~ 3.0 ton	Section 9
		1075mm	4.0 ~ 5.0 ton	—	—	
	Step height	525mm	1.6 ~ 1.8 ton	515mm	1.6 ton	
			2.0 ton	540mm	2.0 ~ 2.5 ton	
		545mm	2.5 ton			
			3.0 ~ 3.5 ton	675 (2nd) /160 (1st)	3.0 ton	
		535mm	4.0 ~ 5.0 ton	—	—	
	Underclearance Center of Wheelbase (Without load)	90mm	1.6 ~ 1.8 ton	110mm	1.6 ton	
			2.0 ton	130mm	2.0 ~ 2.5 ton	
		110mm	2.5 ton			
			3.0 ~ 3.5 ton	225mm	3.0 ton	
		150mm	4.0 ~ 5.0 ton	—	—	
Others	Floor mat	Equipped	1.6 ~ 5.0 ton	Nothing	1.6 ~ 3.0 ton	—
	Material handling lever	Mini-lever with armrest	1.6 ~ 5.0 ton	Manual lever on the front cowl	1.6 ~ 3.0 ton	10-12
	Seat	ORS seat with seat belt	1.6 ~ 5.0 ton	Seat with seat belt	1.6 ~ 3.0 ton	8-4

https://truckmanualshub.com/

AC POWER SYSTEM

■ AC system in industrial trend

Industries have already employed AC power system by making use of its features. Three major features are:

	System design advantages	Product level advantages
1	Simpler and smaller construction of motor	More powerful motor can be used without increasing size.
2	Three-phase AC control realizes wider control range.	Wide control range offers a higher performance and operability.
3	Motor brushes and contactors are dispensed with.	Reduced maintenance cost as the needs for servicing motor brushes and contactors are eliminated.

Industry	1970 80 90
Machine tool	DC \ AC
Train	DC \ AC
Electric Automobiles (EV)	DC \ AC
Electric Forklifts	DC

Thereby industrial truck engineers worldwide have already been aware of the splendid features of AC power system to be implemented in electric forklift trucks.
New AC drive motor systems have been adopted not only in the smaller capacity models, but also in the larger capacity models. This new system resolves the opposing factors between larger output necessity and compactness.

https://truckmanualshub.com/

■ AC power system as compared with DC power system

In the DC power system the controller will chop the battery current in repetition and control the frequency cycles of ON and OFF. The motor performance will change in proportion with the frequency cycles between ON and OFF, thereby the inching at start to the max. performance is controlled.

The AC power system in the new models includes a controller that transforms the battery current into a three-phase alternating current. The motor power is controlled by changing the sinusoidal waveform (frequency, amplitude, etc.) of the three-phase alternating current.
Motor drive voltage, motor construction, and controller details differ between DC and AC power systems, as follows:

Comparison between DC and AC power systems

	Motor voltage	Motor construction	Controller
DC power system	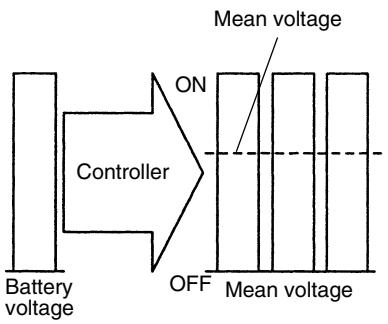	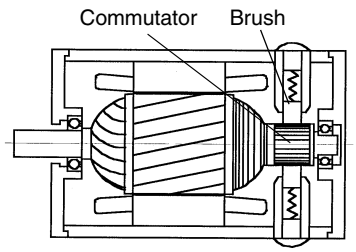	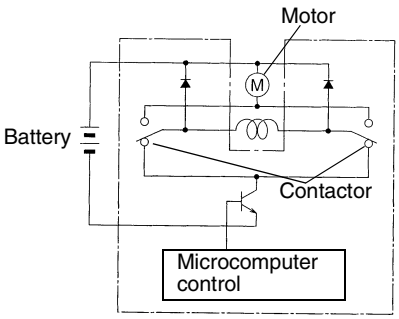
	• A chopper circuit converts the battery current (DC) into a rectangular waveform and controls the mean voltage at a desired level.	• Brushes and commutator require servicing. • Complex mechanism	• Motor power can be controlled simply via the mean DC voltage. • Contactors for reversing the motor rotation are required.
AC power system	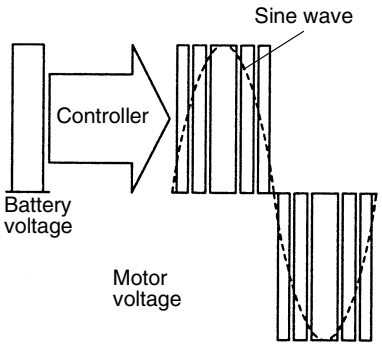	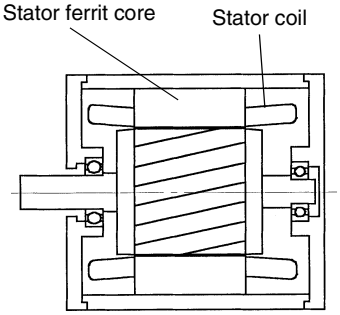	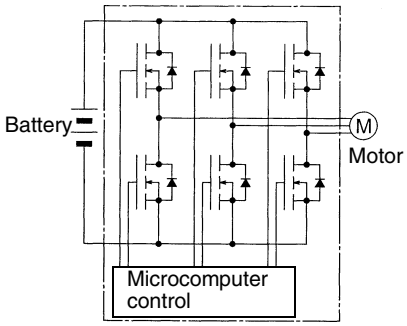
	• Controller converts battery current (DC) into AC.	• Brushes and commutator, which require servicing, arer not used. • Compact and lightweight	• A control module converts DC into three-phase AC. • Contactor for reversing the motor rotation are not required.

https://truckmanualshub.com/

■ Power keep function

(Functions in power mode: P, standard mode: S)

Power keep function using the benefit of AC power system further lengthen the operation hours epochally.
With conventional electric powered forklift trucks, the vehicle performance decreases gradually as the battery level goes low.
The power keep function adopted to new models takes advantage of the increased controllability provided by the AC system to keep the vehicle performance even when the battery level has become low. With this power keep function, the maximum operating hours have increased by 25%, and the number of work cycles that can be completed without the operator noticing a decline in performance has also increased by 25%.
New power keep function offers a significant and essential improvement in the material handling efficiency.
(See page 2-2 for further detail.)

Battery discharge level and vehicle performance

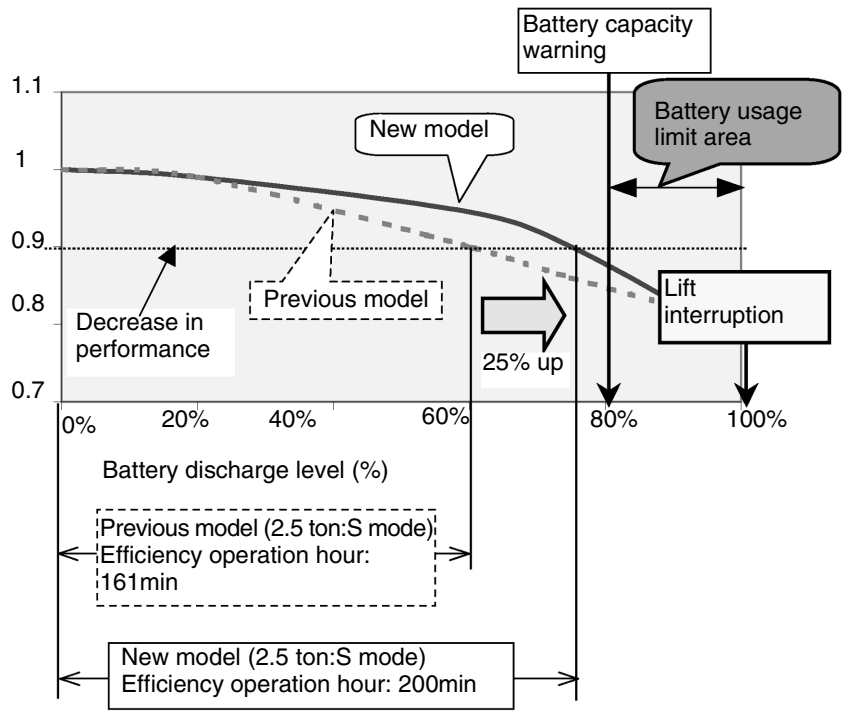

Even the battery indicator is flashing to indicate the charge warning, the performance level of 7FBMF series is batter than that of the former FBMF models.
In view of the battery protection, it is advisable to charge the battery before discharging to the limit.

https://truckmanualshub.com/

■ Performance features in comparison

mfr: manufacturer

2.5 ton

Traveling speed (km/h) [a]

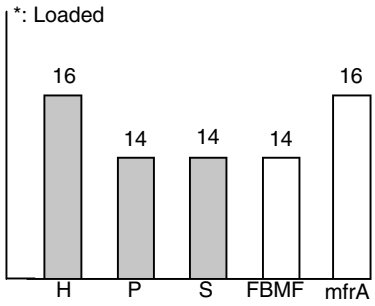

Acceleration (sec) [b]

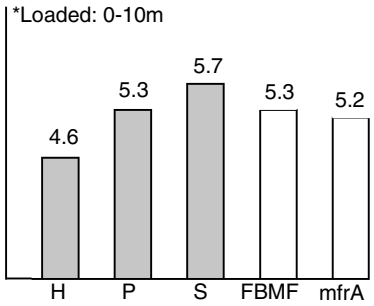

Slope climbing speed (km/h) [c]

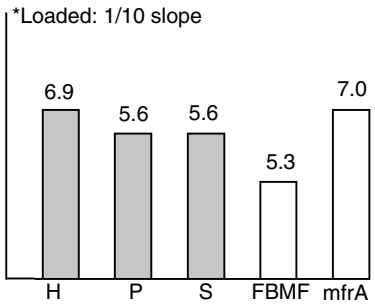

Efficiency operation hours (min) [d] (Toyota 30m cycle)

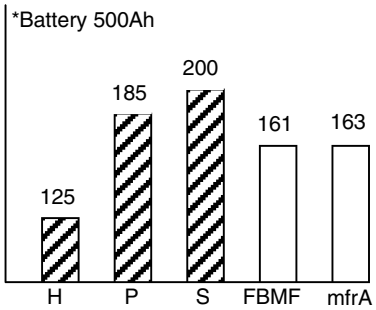

No of cycle (cycle) [e] (Toyota 30m cycle)

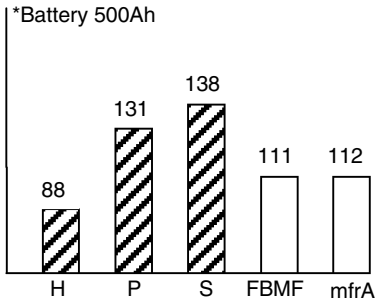

4.5 ton

Traveling speed (km/h) [f]

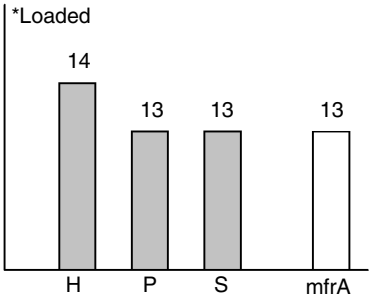

Acceleration (sec) [g]

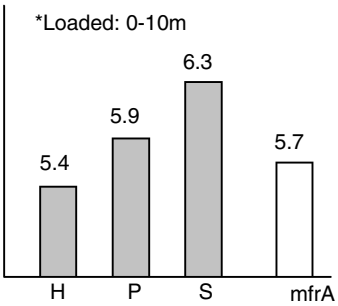

Slope climbing speed (km/h) [h]

Efficiency operation hours (min) [i] (Toyota 50m cycle)

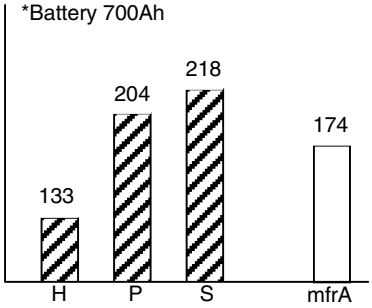

No of cycle (cycle) [j] (Toyota 50m cycle)

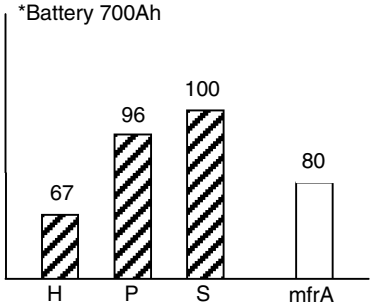

https://truckmanualshub.com/

Operator comfort

(1) Improvement of the ease of getting on and off
By new battery layout, improved the ease of getting on and off

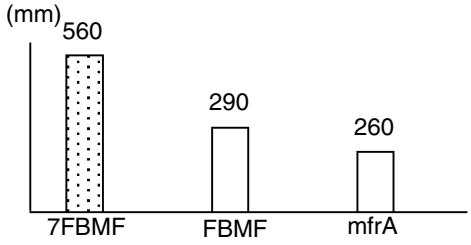

Entry clearance (2.5 ton) [a]

(2) Improvement of comfort
By new battery layout, improved the leg space

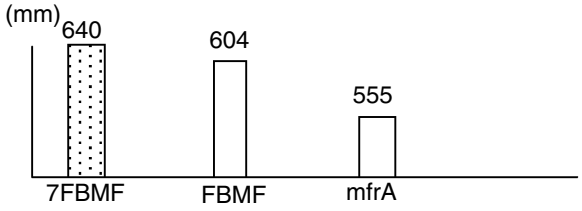

Leg space (2.5 ton) [b]

https://truckmanualshub.com/

■ Power select function

Using the power select function, the operator can select a desirable power mode.
Even though the conventional models also had a power selection switch, it only produced a small difference in the acceleration.
New models use an AC motor instead of a DC motor.
Since and AC motor is simpler and smaller, it becomes possible to install a motor that produces an output higher than that of a conventional DC motor.
In addition, the operator can select appropriate mode from the following power modes simply by operating a switch.

• High power mode <H mode>	: The most active mode with the quickest cycle-time
• Power mode <P mode>	: The highest efficiency mode with quick cycle time and long operation hour
• Standard mode <S mode>	: The longest operation hour mode with the performance equivalent to MFRA

In order to further satisfy the individual customer, a power select function has been provided.
The power select function enables the operator to select one from six power modes, including H, P and S modes, for traveling. The operator can select H mode for operations requiring power and high performance. Select S mode for long time operations, providing the operator with optimum performance to suit the operator's needs and greatly enhance efficiency.

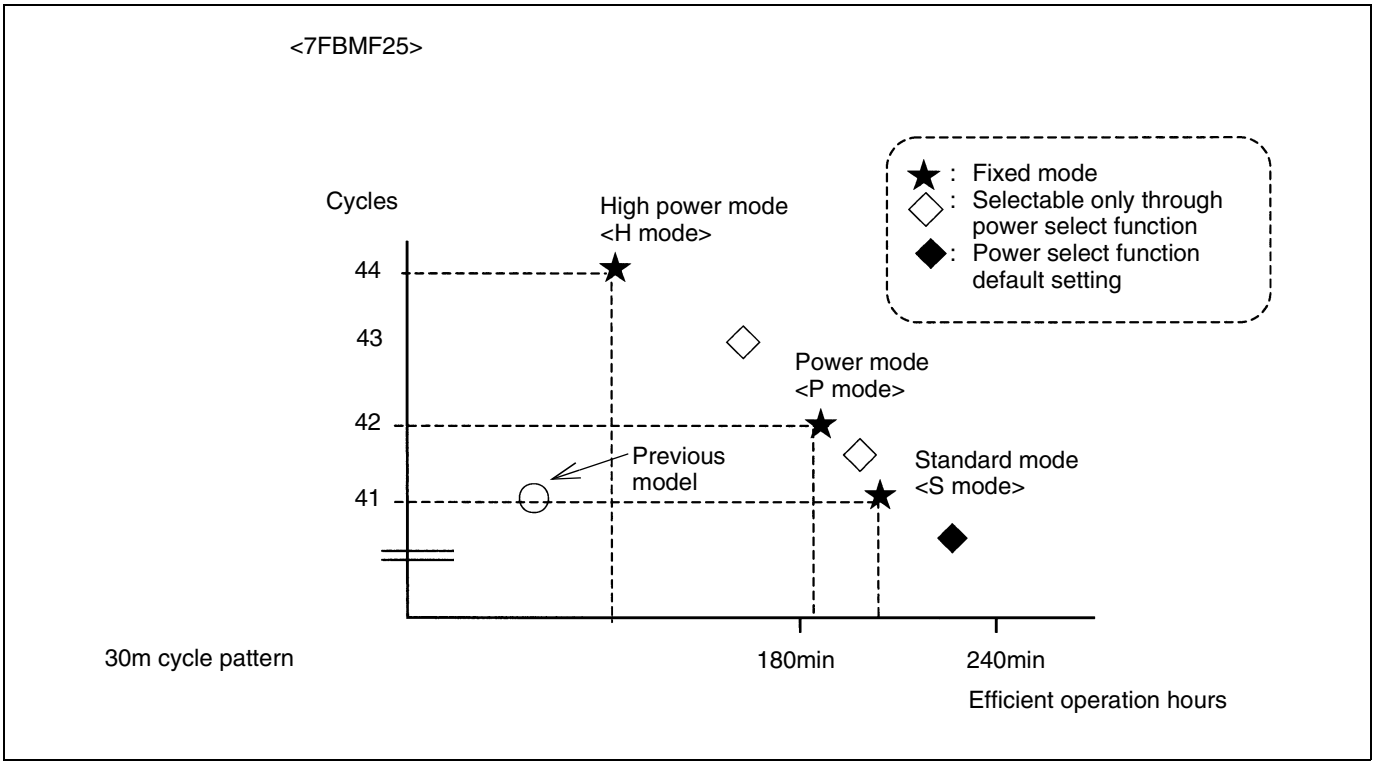

https://truckmanualshub.com/

■ Reduced maintenance cost

The following particular items are inherent to the conventional electric powered models.
① Supplying distilled water to the battery
② Material handling motor brush replacement
③ Material handling motor contactor replacement
④ Traveling motor brush replacement
⑤ Traveling motor contactor replacement
The new 7FBMF model eliminates the need for brush and contactor replacement because the new AC motor does not have brushes and the new AC controller does not have contactors.
The average customer can benefit from this by an annual cost savings of 69% for maintenance expenditures.

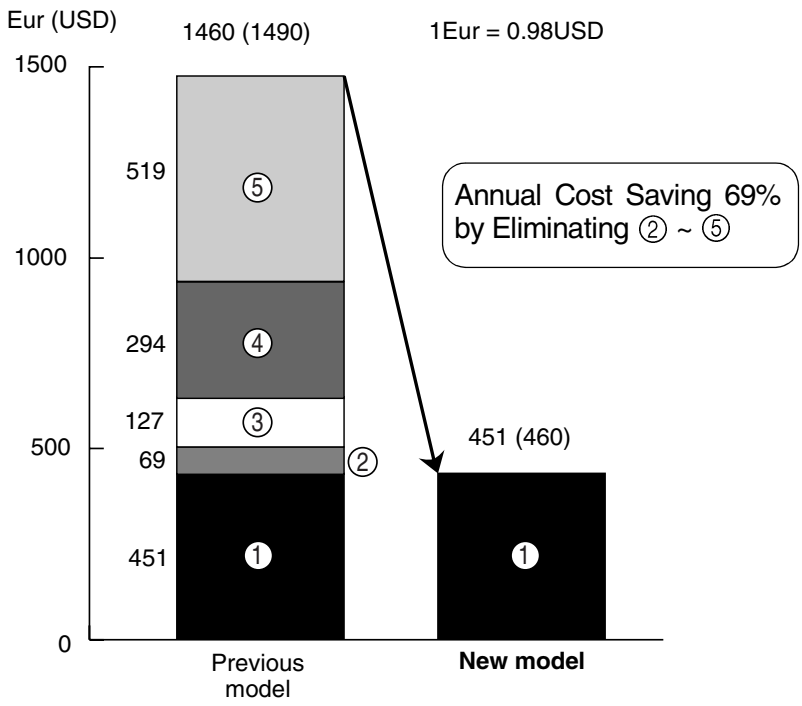

Taking advantage of the wider control range of the AC power system, a regenerative system is adopted.
The AC induction motor generates a braking force when the vehicle is traveling with the accelerator pedal at rest. Also the electromotive force generated in the AC motor, while the accelerator pedal is released, converts the braking effect energy into electrical energy that is sent to the battery.
This regenerative system increases the operation hours. At the same time, the regenerative system improves the traveling feel because it allows the operator to use less brake pedal force to slow the truck down. Furthermore, the regenerative system reduces load on the brake system, slowing down brake lining wear and decreasing the brake maintenance costs.

https://truckmanualshub.com/

■ Stabilizing features

The world-first System of Active Stability (SAS), adopted by the 7FB series models, is available for the new models, too.
Using the SAS the new models achieve the stability level equivalent to that achieved by the 7FB series models.
The following outlines the SAS. For more details of the SAS option, refer to Section 11 “SAS”.

Stability feature		Outline
Rear stabilizer (swing lock)		The rear wheel swing mechanism is locked at high lift-heights and heavy loads, and during a quick turn to obtain a better ground grip force from all four wheels.
Mast function control		
	Front tilt angle control	The front tilt angle is smaller at high heights and heavy loads; greater at low heights and light loads.
	Rear tilt speed control	The rear tilt speed is slower at high heights and faster at low heights.
	Key-lift interlock	The lift lever cannot function by inadvertent contact.
	Automatic fork leveling control	A push on a control button followed by a front tilt operation tilts the mast until the forks are horizontal.

■ Improvement on operability

1. Mini lever
   The hydraulic control levers are displaced to the arm rest fore-front and optimal length, and spacing are given on basis of human engineering. An operator can manipulate the control lever with a hand on the arm rest. Fine operation adjustment can be achieved with the display. The control lever position is adjustable vertically as well as to lengthwise.
   Pleasant material handling operation with less fatigue can be ensured.

https://truckmanualshub.com/

■ Anti-rollback

The anti-rollback function is provided to prevent the truck from rolling down on a slope. This is realized by making use of the combined features of the drive motor electric brake and the parking brake.
Restarting can be done smoothly without rolling down.

■ Model line-up

The model line-up has been widened by the development to 3.5 ~ 5 ton class new model ranges; besides, the 1.8 ton model is added onto the 1 ~ 3 ton classes to meet with varied needs from the markets.

◎: New ●: Continuation

		Capacity (kg)								
		1600	1800	2000	2500	3000	3500	4000	4500	5000
TOYOTA	7FBMF	●	◎	●	●	●	◎	◎	◎	◎
	FBMF	●		●	●	●				

https://truckmanualshub.com/

CONTROLLER

Page

MAIN CONTROLLERS 2-2

General 2-2

Controller Configuration Diagram 2-3

MAIN FEATURES OF CONTROLLER 2-5

https://truckmanualshub.com/

MAIN CONTROLLERS

General

■ AC system

The AC motor drive system controller has been provided with:
- Microcomputer-assisted travel inverter control (converts DC to three-phase AC)
- CAN (Controller Area Network) communication function between main controller and traveling/material handling controller.
- Communication function between multiple display and SAS controller.

This is a multi-functional controller with advanced electronics technology.

The controller offers the power select function and power keep function that take full advantage of the AC power system.

Power select function: Allows the operator to select from three traveling modes, H (High power) mode, P (Power) mode, and S (Standard) mode.
Power keep function: Maintains a high performance level even when the battery level becomes low and increases stress-free operation hours. (Available when P or S mode is selected.)

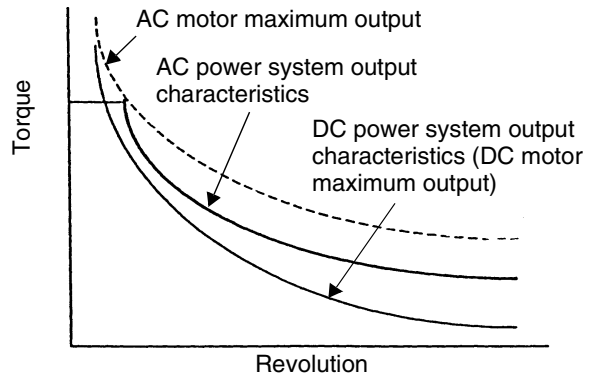

Compared to the DC motor, the AC motor has higher output and a range of output characteristics is obtainable from the increased output.

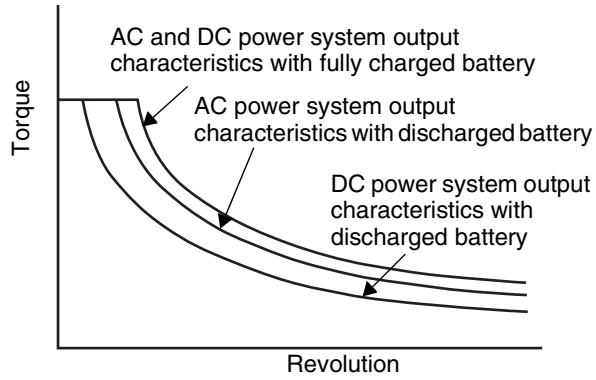

When the battery is discharged, the AC motor provides output characteristics closer to those of a fully charged battery than a DC motor does.

Compared with a DC motor of an equivalent size, an AC motor has a higher output.
The output characteristics of an AC motor are determined by the amplitude and frequency of the alternating current output by the controller.
The controller has a map stored in its memory of the optimum combinations of the current and frequency. Using these, the optimum output characteristics can be obtained for all conditions. When the power selection switch is operated, the controller switches the map and changes the output characteristics. The power select function thus enables the output characteristics to be changed in accordance with the vehicle usage conditions.

■ Power keep function

With a DC power system, the output characteristics are determined by the controller output voltage. The maximum output, therefore, is the output from the motor when the battery voltage is fully applied (chopper duty 100%). The output will decrease with the battery voltage as the battery is discharged.
With an AC power system, however, it is possible to maintain a high performance even when the battery level becomes low because the combination of the amplitude and frequency of the alternating current is changed as the battery level goes low.

https://truckmanualshub.com/

Controller Configuration Diagram

1. Traveling & Load handling controller

■ System configuration diagram

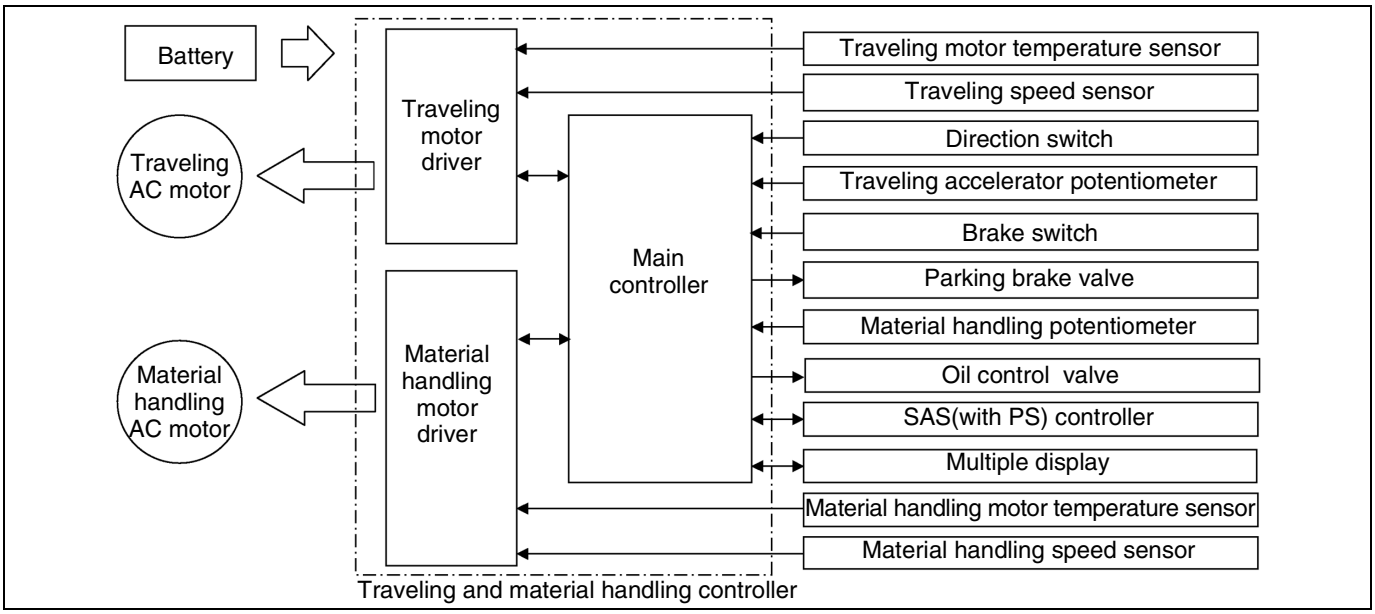

■ Controller internal configuration diagram

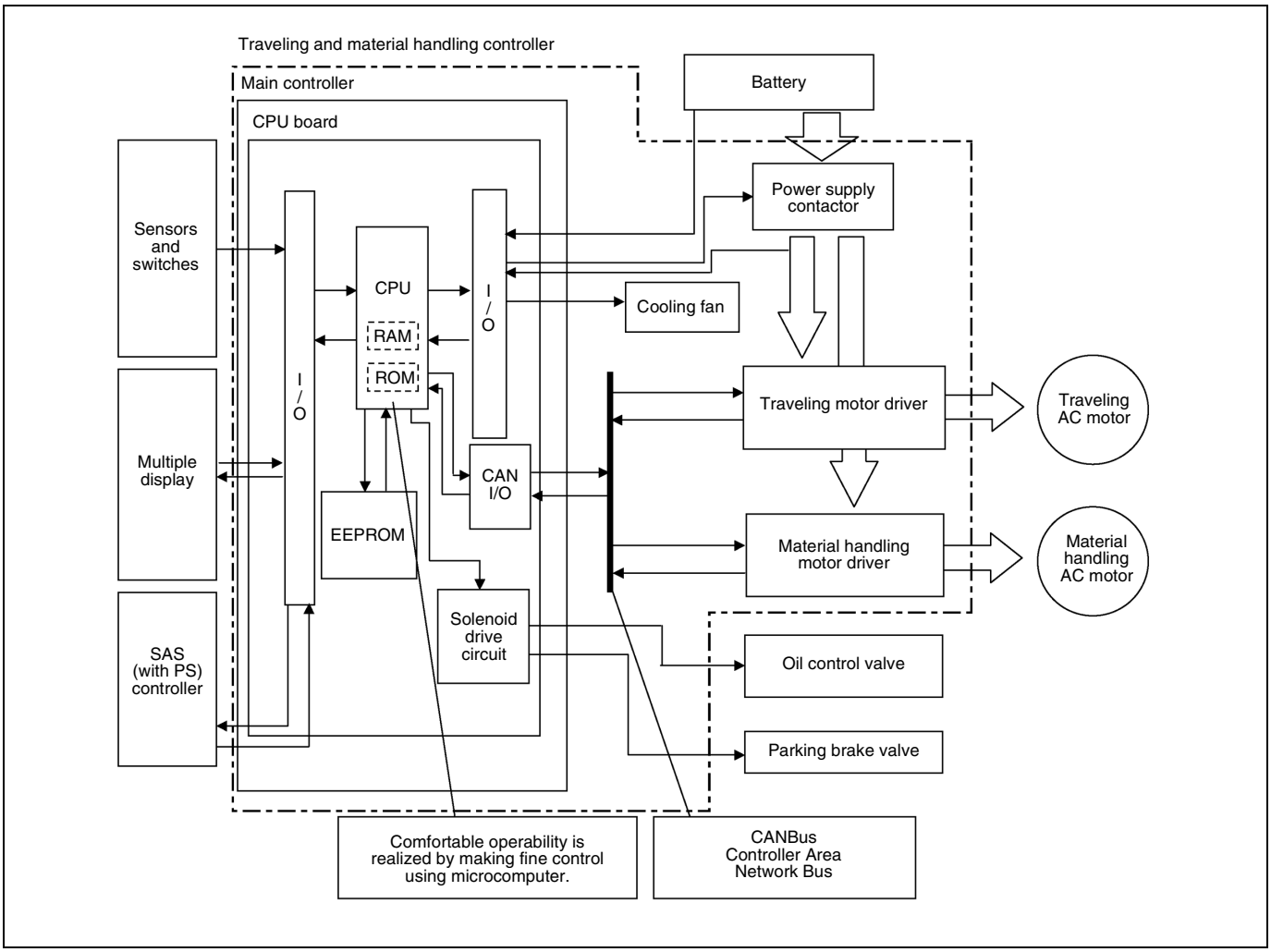

https://truckmanualshub.com/

CPU: Central Processing Unit
ROM: Read Only Memory (with built-in control program)
RAM: Random Access Memory (memory content lost when power turned off)
EEPROM: Electrically Erasable Programmable Read Only Memory (memorizes data required for control and error code.)
I/O: Input/Output interface
CANI/O: Controller Area Network Input/Output interface

2. SAS (With Power Steering) Controller

■ System configuration diagram

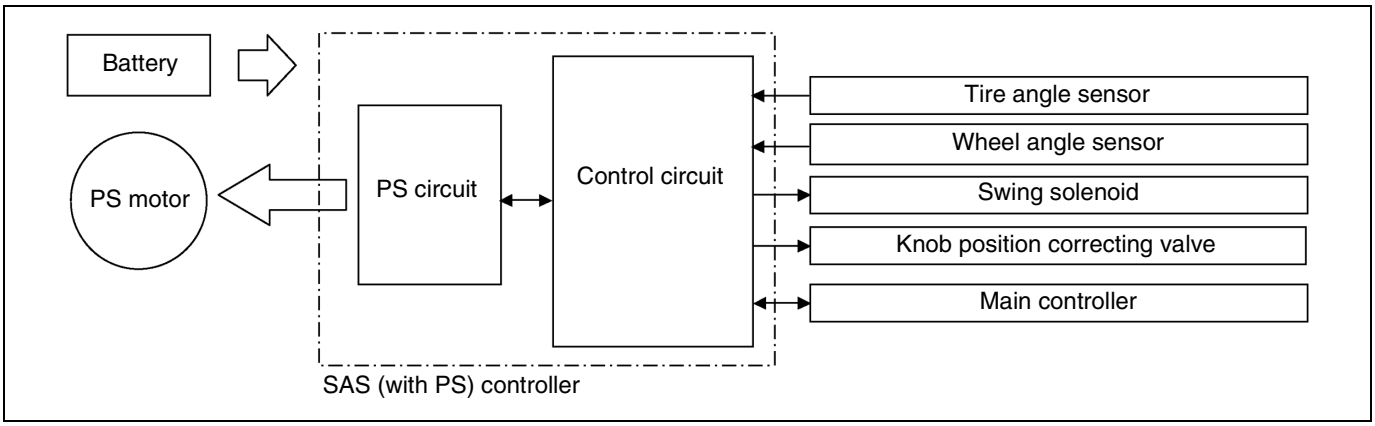

■ Controller internal configuration diagram

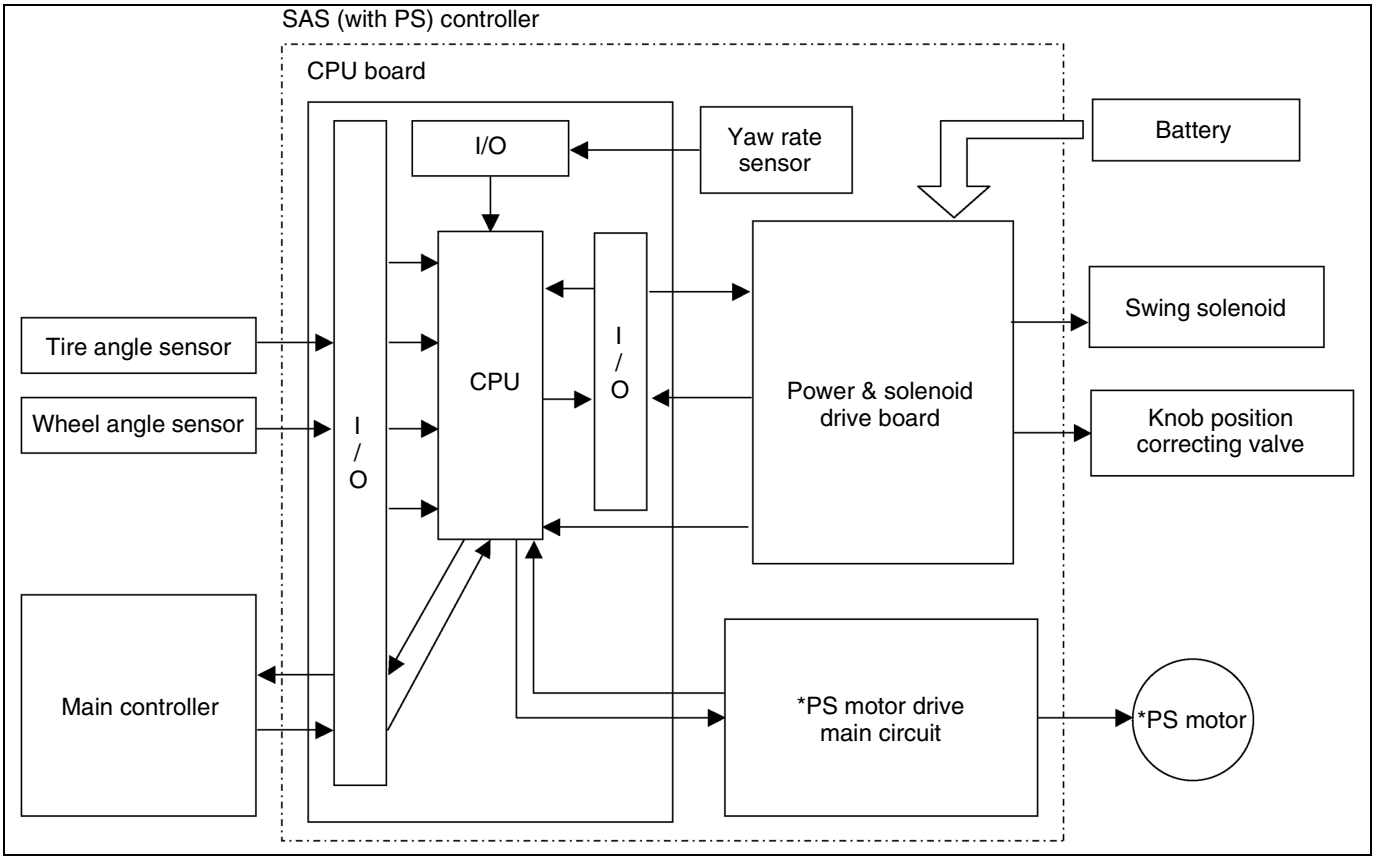

The portions marked with * are applicable only to 7FBMF 16 ~ 35 models.
CPU: Central Processing Unit
I/O: Input/Output interface

https://truckmanualshub.com/

MAIN FEATURES OF CONTROLLER

1. Regenerative system (accelerator off)
   When the vehicle travels with the accelerator off, a braking force produced by the motor generates electricity, which is retrieved by the battery. The working of the regenerative system extends the available operation hours and the service life of brake linings. At the same time, the regenerative system improves the travel speed controllability and stability because it allows the operator to use the soft braking force exerted by the motor. Even if the direction lever is at the neutral position, the regenerative system will function when the accelerator is off.
2. Regenerative system (brake pedal depressed)
   Regenerative system is operated when the brake pedal is depressed as well, which allows to extend the available operation hours and the service life of brake lining.
   Even if the direction is at the neutral position, the regenerative system will function when the brake pedal is depressed.
3. Regenerative system (switch back)
   The switch back operation (It means the directional change during traveling) also regenerate electricity like the previous model. Furthermore the AC controller in the new model has no contactor for traveling so that the switch back operates smoother than before.
4. Power select function
   Three traveling and material handling modes are available from a selection switch on the multiple display: H (high power) mode, P (power) mode, and S (standard) mode.
5. Advanced power select function (option)
   The advanced power select function allows the operator to select a traveling power mode and a material handling power mode independently from each other. It also allows the operator to define a mode other than H, P, and S.
6. Power keep function
   The power keep function maintains the vehicle performance at a high level even when the battery level is low. With the new models, stress-free operation hours for a battery charged have increased.
   (The power keep function is available only when the operator selects P or S mode.)
7. Auto-off system
   If the operator leaves the vehicle with the key switch ON, the auto-off system forcibly shuts down the controller (equivalent to key switch OFF) after a preset period to prevent wasteful expenditure of energy. To restart the vehicle, turn the key switch OFF and then ON.
8. Seat switch
   The seat switch does not allow the vehicle to travel as well as any material handling to operate by the mini-levers unless someone is on the operator's seat.
9. Anti-rollback function
   The anti-rollback function makes it easy to start the vehicle on an inclined surface. This function is achieved by controlling both the drive motor and the brake system.
10. 2-speed travel speed control
    The 2-speed travel speed control switch sets a speed limit.
    The set value is adjustable by a switch on the multiple display.
11. Thermal Protector
    Overheat warning:
    Temperature in the controllers and motors are monitored by temperature sensors. If an abnormally high temperature is detected, the controller output is reduced to prevent overheating. The display will warn the operator.

https://truckmanualshub.com/

12. Battery level computation
    The controller monitors decrease in the battery voltage, computes the remaining capacity, and displays it as the current battery level.
13. Diagnostic function
    The diagnostic function can detect abnormalities in the traveling controller and the material handling controller, operation mechanisms such as the accelerator, and sensors. When an abnormality is detected, the diagnostic function outputs a diagnostic code and takes the appropriate measure.
14. Analyzer function
    The multiple display has an analyzer mode that can be used for troubleshooting or for testing operation mechanisms and motor drivers.
15. Over-discharge warning function
    When the remaining capacity level reaches a specified level, the multiple display shows a warning and the load handling operation is restricted.
    This will protect the battery and will urge the operator to charge the battery.
    It is possible to release this restriction temporarily by turning the key switch off at once before resetting as emergency measures.
16. Return-to-neutral function
    If the operator turns the key switch ON with the direction lever at the forward or reverse position or with the accelerator pedal depressed, the vehicle will not start. The operator has to return the direction lever and accelerator pedal to their neutral positions once in order to allow it to restart.
17. Parking brake ON warning
    The buzzer sounds when the operator attempt to start the truck with the parking brake switch turned ON.
18. Parking brake OFF warning
    The buzzer sounds to warn the operator when moving from the drive seat without the parking brake switch turned on.
19. Mini-lever control
    Based on operation signals of the mini-lever, the main controller controls material handling operation by controlling solenoid valves and the material handling controller.

https://truckmanualshub.com/

MULTIPLE DISPLAY

Page

MULTIPLE DISPLAY INDICATION 3-2

MULTIPLE DISPLAY FUNCTIONS 3-3

SERVICE FUNCTIONS 3-9

https://truckmanualshub.com/

MULTIPLE DISPLAY INDICATION

General

Various essential data with regard to the truck status, warning signs, setting, meters, etc. are visible by switching display.

(Indication of ①-⑦ will be changed according to the functional operation.)

During parking

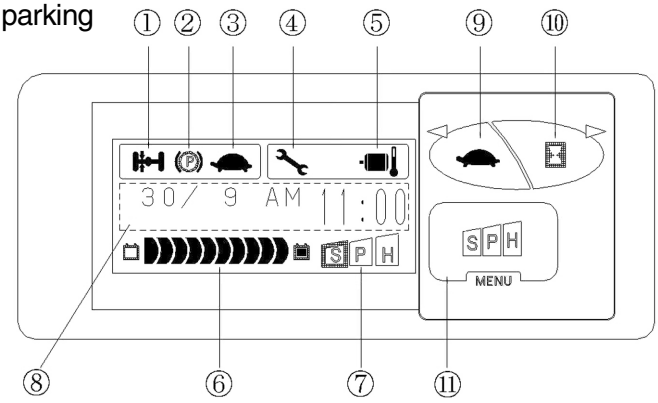

Initial screen after the key switching on

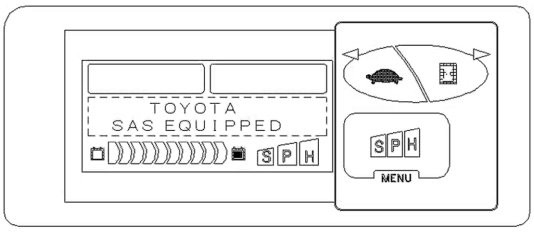

During traveling

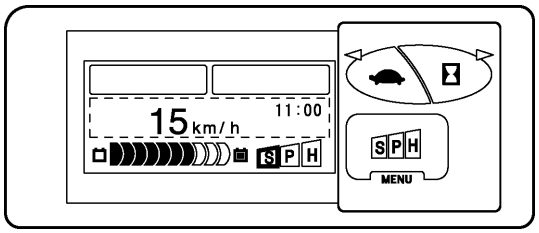

Upon error occurrence

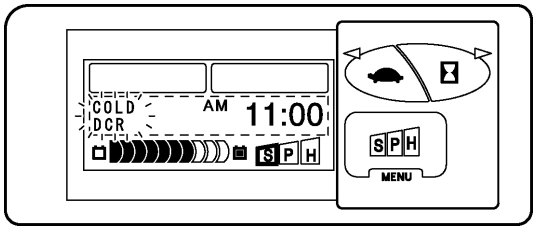

No.	Description	No.	Description
①	Swing lock indicator	⑦	Power select indicator
②	Parking brake indicator	⑧	Multiple display area
③	Travel 2nd speed setting indicator	⑨	Travel 2nd speed control set switch
④	Diagnostic mode indicator	⑩	Hour meter select switch
⑤	Overheat warning indicator	⑪	Power select switch
⑥	Battery capacity indicator		

https://truckmanualshub.com/

MULTIPLE DISPLAY FUNCTIONS

Table of Multiple Display Functions

○: Available
—: Not available

Functions			Easy model (standard)	All-round model (optional)
Status display	①	Battery capacity indicator	○	○
	②	Speedometer	○	○
	③	Travel 2nd speed setting indicator	○	○
	④	Swing lock indicator	○	○
	⑤	Parking brake indicator	○	○
	⑥	Power select indicator	○	○
Level setting	⑦	Power select function	○	○
	⑧	Travel power control level setting	○	○
	⑨	Material handling power control level setting	○	○
	⑩	Travel 2nd speed control level setting	○	○
Warning	⑪	Battery over-discharge warning	○	○
	⑫	Low battery capacity warning	○	○
	⑬	Overheat warning	○	○
	⑭	Parking brake ON warning	○	○
	⑮	Parking brake OFF warning	○	○
	⑯	Return to neutral warning	○	○
	⑰	Over speed alarm	—	○
	⑱	Diagnostic code display	○	○
Integrating meters	⑲	Key switch on hour meter	○	○
	⑳	Travel or material handling motors service hour meter	—	○
	㉑	Travel motor service hour meter	—	○
	㉒	Material handling motor service hour meter	—	○
	㉓	Lap time meter	—	○
	㉔	Odometer	—	○
	㉕	Trip meter	—	○
	㉖	Calendar/Clock	○	○

https://truckmanualshub.com/

Explanation of list items

■ Easy model (standard) and all-round model

Difference between easy model (standard) and all-round model (option)
As shown in the table, all-round model (option) has additional optional meters, such as No. ⑳-㉕.

■ Status display

The indications with regard to the existing condition (or Status quo) of the truck before or during the operation

① Battery capacity indicator
Battery capacity indicator shows the remaining battery level in 10 stage mark.

② Speedometer
Speedometer indicates speed digitally in 1 km/h.
When stopping, the part of the display of the vehicle speed shows the date and the clock, and only when traveling, displays the vehicle speed.

③ Travel 2nd speed setting indicator
This indicator comes on or goes off whenever the operator presses the travel 2nd speed control switch. This indicator is lit when the travel 2nd speed control is effect, limiting the vehicle speed at a preset level. The speed control level can be set using the travel 2nd speed control level setup screen.

④ Swing lock indicator
This indicator is lit when the swing lock cylinder of SAS function is locked. This indicator goes off automatically when the swing lock cylinder is unlocked.

⑤ Parking brake indicator
The operation indicator blinks while the parking brake is in operation.

⑥ Power select indicator
It is a mode being enclosed with □ of S P H which has been selected now. Whenever the power select switch is pushed, the select mode can be changed. When “POWER SELECT” is “YES” on the power control selection screen, all S P H is enclosed with □ .

https://truckmanualshub.com/

■ Level setting

The level with regard to the manipulation and the performance can be selected and set up in compliance with needs.

⑦ Power select function
Three traveling and material handling modes are available from a selection switch on the multiple display: H (high power) mode, P (power) mode, and S (standard) mode.

⑧ Travel power control level setting
Setting becomes possible only when setting “YES” on the power control selection screen. The power control level can be set besides the S P H mode.

⑨ Material handling power control level setting
Setting becomes possible only when setting “YES” on the power control selection screen. The power control level can be set besides the S P H mode.

⑩ Travel 2nd speed control level setting
The travel 2nd speed set up and its cancellation can be done on the screen, and the maximum speed is restrained from exceeding by the set up speed.

■ Warning

Faults or risks can be detected and warning are given .

⑪ Battery over-discharge warning
If the battery is further discharged to another preset level after the low battery level warning has been given, all segments in the battery level indicator blink and a buzzer sounds to warn the operator.

⑫ Low battery capacity warning
If the battery level goes below a preset level, the battery level indicator blinks. If the operator turns the key switch from OFF to ON when the battery level is below this level, a buzzer will sound five seconds to warn the operator.

⑬ Overheat warning
Overheat warning indicator blinks and a buzzer sounds to warn the operator when traveling motor, or material handling motor, and the controller overheats.

⑭ Parking brake ON warning
The buzzer sounds when the operator attempt to start the truck with the parking brake set.

⑮ Parking brake OFF warning
The buzzer sounds to warn the operator when moving from the drive seat without setting the parking brake.

⑯ Return-to-neutral warning
The buzzer sounds when the operator turns the key switch on while depressing the accelerator pedal or turning the direction switch on to start the vehicle.

⑰ Over speed alarm (option)
When the set speed is exceeded, it is detected and the speed indicator blinks and the buzzer sounds to give a warning to the operator. Unlike travel 2nd speed control, even if the set speed is exceeded, any speed restriction is not applied.

⑱ Diagnostic mode indicator
This indicator blinks when the diagnostic mode operates, the error code is displayed, and the buzzer sounds.

https://truckmanualshub.com/

■ Integrating meters (or multiple hour meter)

The indication differs between the easy model (standard) and the all-round model (option), as listed in the table on page 3-3. The meter ⑳ ~ ㉕ are available to the all-round model.

In addition to the key-on-hours, the travelling and the material handling hours, and the travel distance can be shown by total figures.

⑲ Key switch on hour meter
Total hours of the Key switch on time are shown

⑳ Travel or material handling motors service hour meter (option)
Drive motor running hours + (plus) material handling motor running hours are shown in total hours.
Length of time during which both motors are running, one motor only is counted.

㉑ Travel motor service hour meter (option)
Travel motor running hours in total are shown.

㉒ Material handling motor service hour meter (option)
Material handling motor running hours in total are shown.

㉓ Lap time meter (option)
Key on time in total during predetermined period is shown.

㉔ Odometer (option)
Travel distance in total is shown.

㉕ Trip meter (option)
Travel distance per trip is shown.

㉖ Calender / clock
See page 3-2 (Top drawing.)

https://truckmanualshub.com/

■ Display screen list

<Initial screen>
Initial screen is displayed for a few seconds after key-switch ON.

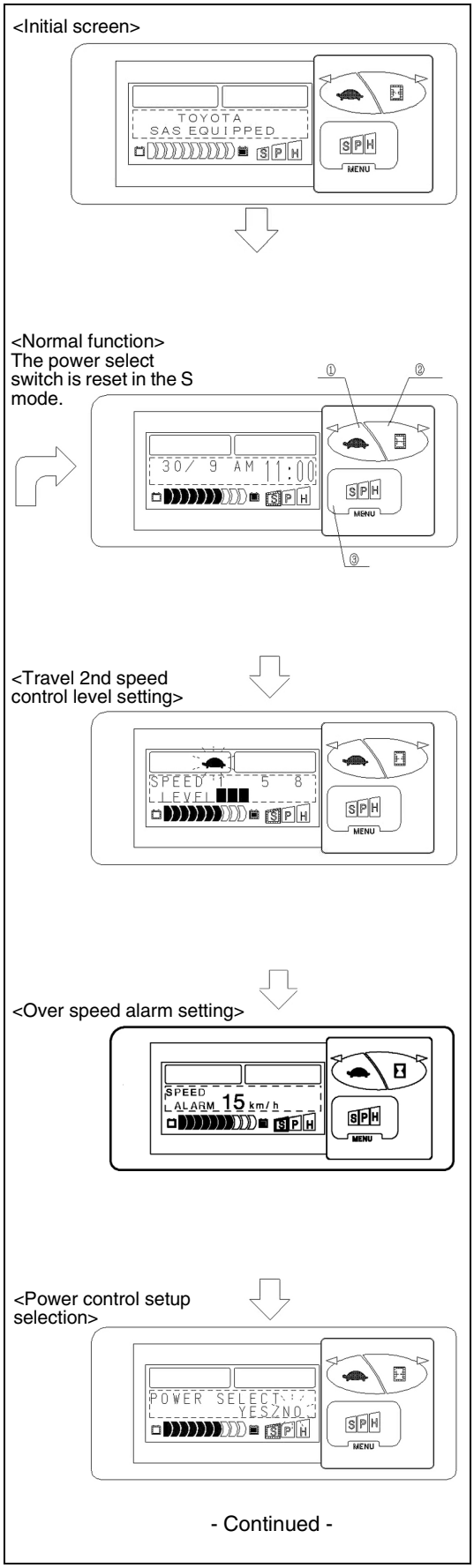

<Normal function>
Press switch① ..... Travel 2nd speed control ON and OFF
Press switch② ..... Hour meter screen
Press switch③ ..... Power select (S→P→H)
Press switch③ ..... for more than 2 seconds ... Next screen

<Travel 2nd speed control level setting>
Press switch① ..... Decrease the set level
Press switch② ..... Increase the set level
Press switch③ ..... Next screen

<Over speed alarm setting> All-round model (option) only
Press switch① ..... Decrease the set speed
Press switch② ..... Increase the set speed
Press switch③ ..... Next screen

<Power control setup selection>
Press switch① ..... Changes the setting from “NO” to “YES”
Press switch② ..... Changes the setting from “YES” to “NO”
Press switch③ ..... Select “YES” → Travel power control screen
Select “NO” → Next screen

- Continued -

https://truckmanualshub.com/

<Clock setup selection>

Press switch① ..... Changes the setting from “NO” to “YES”
Press switch② ..... Changes the setting from “YES” to “NO”
Press switch③ ..... Select “YES” → Clock set screen
Select “NO” → Normal function screen

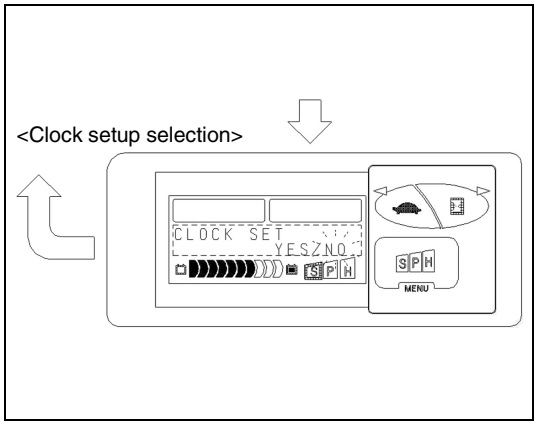

https://truckmanualshub.com/

SERVICE FUNCTIONS

Multiple display has the service function to use when the serviceman maintain and set the specification of the vehicle. Never to destroy important internal data by using the service function wrong, the service functions are protected by the password.

Functions		Description
Analyzer		Used for displaying the operation status of electrical systems onboard or for accessing information on errors detected by the controller.
Tuning		Used for fine-tuning the traveling and material handing control features.
Option setting	Specifications	Used for changing the setups according to the availability of options.*1
	Availability of controls	Used for changing the setups according to the availability of various control features.
	Multiple hour meter startup	Used for starting up the multiple hour meter.
	Demonstration mode	Used for setting and canceling the demonstration mode. (Function prohibiting material handing operation during traveling which is set at the time delivery.)
Matching		Used for readjusting the sensor signal voltage values associated with the standard vehicle condition.
Wheel dia. (tire constant)		Used for improving the speedometer accuracy by updating the wheel diameter information.

*1:
These functions are used to adjust the controller and display setups to the availability of optional or control features. They do not enable or disable the actual functioning of the optional or control features.

https://truckmanualshub.com/

BATTERY

Page

SPECIFICATION 4-2
NECESSARY BATTERY WEIGHT 4-2
RECOMMENDED BATTERIES 4-2
BATTERY CONNECTOR RELEASE 4-2
BATTERY STOPPER 4-3
BATTERY INTERCHANGEABILITY 4-3
RECOMMENDED BATTERY LIST 4-4
TABLE OF WORKING HOURS 4-5

https://truckmanualshub.com/

SPECIFICATION

The batteries are not set up as TOYOTA genuine parts.
Use a battery compatible to DIN43 536 (See the battery case dimensions listed in the table on page 4-4).
In case where high height battery type and battery roll out option are selected, the battery case dimensions are different from the STD type.
Use a battery attached with the intermediate tapping led.

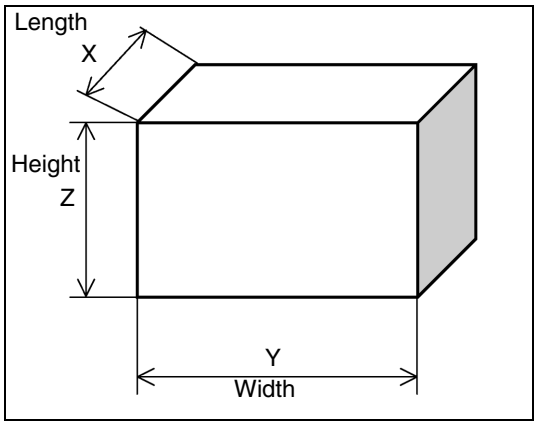

NECESSARY BATTERY WEIGHT

When installing a battery, refer to the table on page 4-4. adjust the weight so that the necessary minimum weight is satisfied.

RECOMMENDED BATTERIES

Refer to the table on page 4-4.

BATTERY CONNECTOR RELEASE

The battery connector release is the standard equipment in all the models.
Since the battery connecter is located under the battery hood, it is necessary to disconnect at the operator's seat by the lever operation.

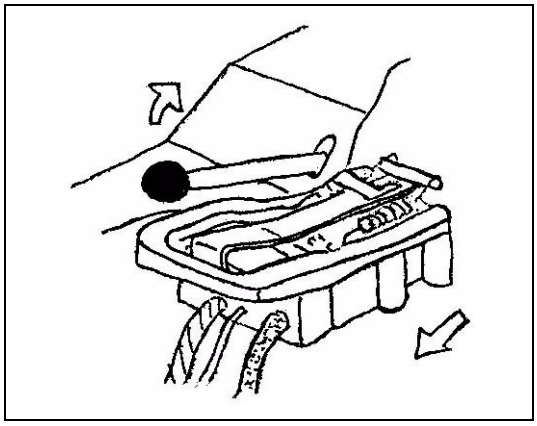

https://truckmanualshub.com/

Note: Use a battery connector (320A, 50sq) compatible to DIN 43 589 with Auxiliary electrode (the recommended connector is FEM 320A made by REELS. The dimensions of the hook is as illustrated. Don't use any other connector.
When a battery is installed locally, always check that the connector can be released by the release lever.

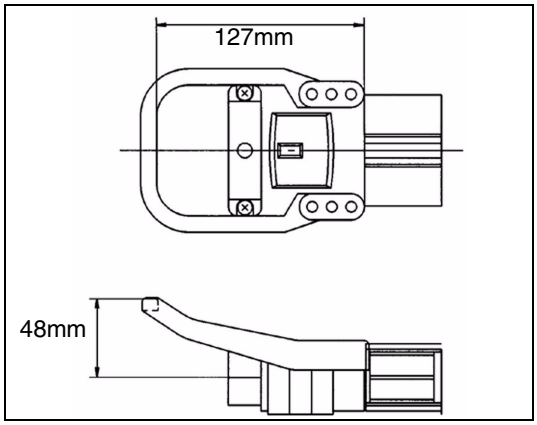

BATTERY STOPPER

Newly designed battery stopper prevents the battery from coming out, even if the truck should tip over. Always check that the stopper is securely locked by the spring, as illustrated.

Where the high height type battery option or the battery roll out type option is installed, always check that the battery hood is securely locked, because the hoods prevent the battery from coming out even if the truck should tip over.

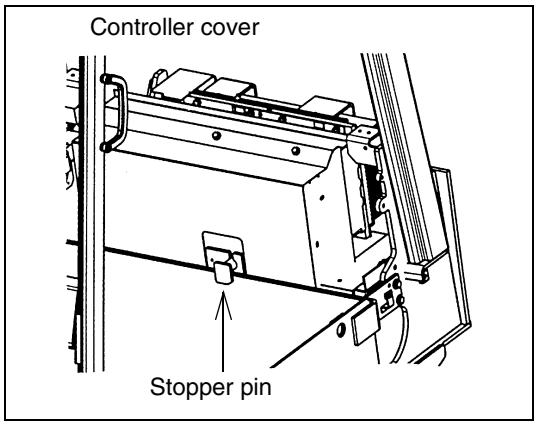

BATTERY INTERCHANGEABILITY

The dimensions of the battery case for the previous models are equivalent to those of high height battery type option on the new models. But in order to install the previous battery on the new model, it is necessary to change the battery connector and the cable (160A, 35 sq → 320A, 50 sq).

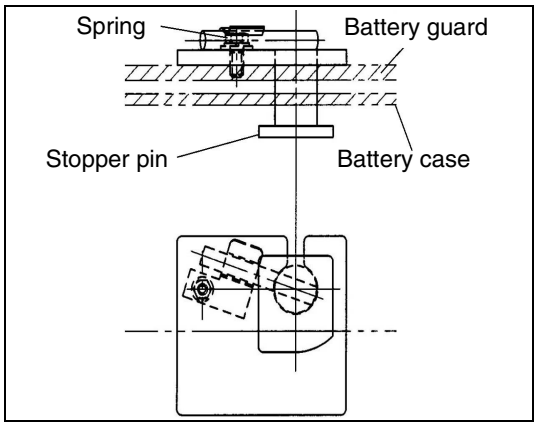

https://truckmanualshub.com/

RECOMMENDED BATTERY LIST

Vehicle type	Voltage	Battery type	DIN No.	Installed battery			Battery case			Necessaey minimum battery weight
				Supplier	Model	Capacity [AH/5hr]	Dimensions[mm]			Dimensions[kg]:With case
							Length	Width	Height	
7FBMF16,18	80	STD	4PzS440L	VARTA	4PzG400	400	708	1026	627	1220
					4PzS440L	440	↑	↑	↑	↑
					4PzS480Hx	480	↑	↑	↑	↑
				OLDHAM	DPA4	400	↑	↑	↑	↑
					DNA4(4PzS480Hx)	480	↑	↑	↑	↑
				FULMEN	80 v 4EPSZ 460	460	↑	↑	↑	↑
					80 v 4EPSZ 500	500	↑	↑	↑	↑
		OPT (High height battery and Battery roll out)	3PzS420L	VARTA	3PzG360	360	567	1028	784	1240
					3PzS420L	420	↑	↑	↑	↑
					3PzS450Hx	450	↑	↑	↑	↑
				OLDHAM	DZA3	390	↑	↑	↑	↑
					DOA3	450	↑	↑	↑	↑
				CHLORIDE	WESD7	360	↑	↑	↑	↑
					WFSD7	450	↑	↑	↑	↑
				FULMEN	SDH3	360	↑	↑	↑	↑
					EGX3	450	↑	↑	↑	↑
7FBMF20,25	80	STD	5PzS550L	VARTA	5PzG500	500	852	1026	627	1530
					5PzS550L	550	↑	↑	↑	↑
					5PzS600Hx	600	↑	↑	↑	↑
				OLDHAM	DPA5	500	↑	↑	↑	↑
					DNA55(PzS600Hx)	600	↑	↑	↑	↑
				FULMEN	80 v 5EPSZ 575	575	↑	↑	↑	↑
					80 v 5EPSZ 625	625	↑	↑	↑	↑
		OPT (High height battery and Battery roll out)	4PzS560L	VARTA	4PzG480	480	711	1028	784	1560
					4PzS560L	560	↑	↑	↑	↑
					4PzS600Hx	600	↑	↑	↑	↑
				OLDHAM	DZA4	520	↑	↑	↑	↑
					DOA4	600	↑	↑	↑	↑
				CHLORIDE	WESD9	480	↑	↑	↑	↑
					WFSD9	600	↑	↑	↑	↑
				FULMEN	SDH4	480	↑	↑	↑	↑
					EGX4	600	↑	↑	↑	↑
7FBMF30,35	80	STD	6PzS660L	VARTA	6PzG600	600	996	1026	627	1780
					6PzS660L	660	↑	↑	↑	↑
					6PzS720Hx	720	↑	↑	↑	↑
				OLDHAM	DYA6(6PzS660L)	660	↑	↑	↑	↑
					DNA6(6PzS720Hx)	720	↑	↑	↑	↑
				FULMEN	80 v 6EPSZ 690	690	↑	↑	↑	↑
					80 v 6EPSZ 750	750	↑	↑	↑	↑
		OPT (High height battery and Battery roll out)	5PzS700L	VARTA	5PzG600	600	855	1028	784	1860
					5PzS700L	700	↑	↑	↑	↑
					5PzS750Hx	750	↑	↑	↑	↑
				OLDHAM	DZA5	650	↑	↑	↑	↑
					DOA5(5PzS750Hx)	750	↑	↑	↑	↑
				CHLORIDE	WFSD9	600	↑	↑	↑	↑
					WFSD11	750	↑	↑	↑	↑
				FULMEN	EGX4	600	↑	↑	↑	↑
					EGX5	750	↑	↑	↑	↑
7FBMF 40,45,50	80	STD	7PzS770L	VARTA	7PzG700	700	1140	1034	627	2030
					7PzS770L	770	↑	↑	↑	↑
					7PzS840Hx	840	↑	↑	↑	↑
				OLDHAM	DYA7(7PzS770L)	770	↑	↑	↑	↑
					DNA7(7PzS840Hx)	840	↑	↑	↑	↑
				FULMEN	80 v 7EPSZ 805	805	↑	↑	↑	↑
					80 v 7EPSZ 875	875	↑	↑	↑	↑
		OPT (High height battery and Battery roll out)	6PzS840L	VARTA	6PzG720	720	999	1028	784	2180
					6PzS840L	840	↑	↑	↑	↑
					6PzS900Hx	900	↑	↑	↑	↑
				OLDHAM	6PzS840L	840	↑	↑	↑	↑
					DOA6(6PzS900Hx)	900	↑	↑	↑	↑
				FULMEN	80 v 6EPSZ 930	930	↑	↑	↑	↑

https://truckmanualshub.com/

TABLE OF WORKING HOURS

Table of Working Hours (S-Mode)

Model	Battery Voltage (V)	Battery Capacity (AH/5hr)	Working Hours (h min.)
7FBMF16	80, (72)	400	4 h 30 min.
		480	5 h 40 min.
7FBMF18	80, (72)	400	4 h 20 min.
		480	5 h 25 min.
7FBMF20	80, (72)	500	4 h 55 min.
		600	6 h 00 min.
7FBMF25	80, (72)	500	4 h 30 min.
		600	5 h 35 min.
7FBMF30	80, (72)	600	5 h 35 min.
		720	6 h 50 min.
7FBMF35	80, (72)	600	5 h 15 min.
		720	6 h 30 min.
7FBMF40	80, (72)	700	5 h 05 min.
		840	6 h 15 min.
7FBMF45	80, (72)	700	4 h 50 min.
		840	6 h 00 min.
7FBMF50	80, (72)	700	4 h 30 min.
		840	5 h 35 min.

Note:

1. **Working Hours**
   7FBMF16 ~ 35 : TOYOTA 30m operation cycle
   7FBMF40 ~ 50 : TOYOTA 50m operation cycle

2. **Working Hours of H-Mode**
   1 ton Series : about 65% down of S-Mode
   Above 2 ton model : about 73% down of S-Mode

3. **Working Hours of P-Mode**
   All model : about 92% down of S-Mode

https://truckmanualshub.com/

POWER TRAIN

Page

DRIVE MOTOR 5-2

DRIVE UNIT 5-7

FRONT AXLE 5-9

BRAKE 5-10

PARKING BRAKE 5-13

PARKING BRAKE SYSTEM 5-15

BRAKE PEDAL 5-17

https://truckmanualshub.com/

DRIVE MOTOR

■ General

1. The new models use a newly developed AC induction motor as the drive motor. Being compact, powerful, and maintenance-free, the new motor has ideal characteristics for a motor used in a battery-powered forklift truck.
2. Since the new motor is so compact, it provided enough space under the floor to install the battery. With the battery installed under the floor, the new models incorporate improvements in the ease of getting on and off of the vehicle and operator comfort.
3. The new motor is maintenance-free; it does not have brushes that have to be serviced.

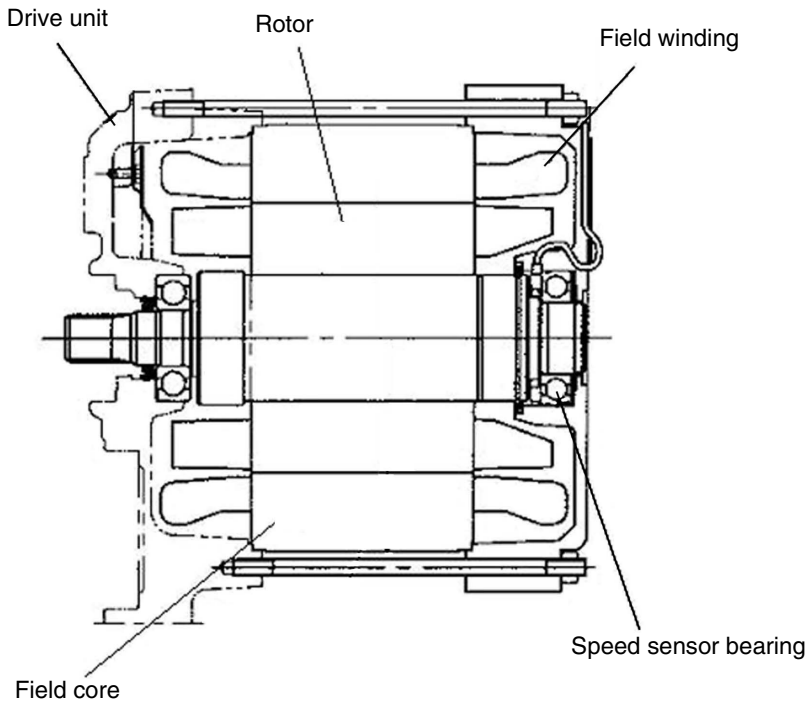

■ Drive motor characteristic

The newly developed AC induction motor characteristics are as follows:

- The motor is directly installed to the drive unit case (semi-built-in structure). Consequently, the drive motor assembly is very compact.
- Optimized motor core form and coils have improved the motor efficiency.
- High-precision rpm sensors have been adopted to directly detect revolving speed, realizing power selection function, power keep function and other fine-textured functions.
- The motor temperature detection sensor has been adopted to alert the controller and prevent the motor from overheating during overloaded operation.

Note: The truck performance may go down temporarily under the severe use condition such as continuous operation with a heavy load. The performance decline at the time is not at all abnormal since it has been so arranged that the controller and the motor can be prevented from overheating.
The temperature sensors incorporated in the controllers as well as the motors detect the temperature rise, and the control by which current supply toward the motors has undergone restriction will take place. On the occasion the monitoring display shows where subjected to overheat.
In the event of the overheat indication, wait the truck operation for a while until the display indication has gone away.

https://truckmanualshub.com/

■ Main specifications

	Models	Nominal voltage (V)	Rated output (kW)	Type	Body size Diameter × Length (mm)	Weight (kg)
STD	7FBMF16,18	72/80	12.0/13.3	Three phase AC	ϕ 270 × 260	62
	7FBMF20,25,30, 35	72/80	15.4/17.1	Three phase AC	ϕ 270 × 285	73
	7FBMF40,45,50	72/80	14.9/16.6	Three phase AC	ϕ 270 × 340	96

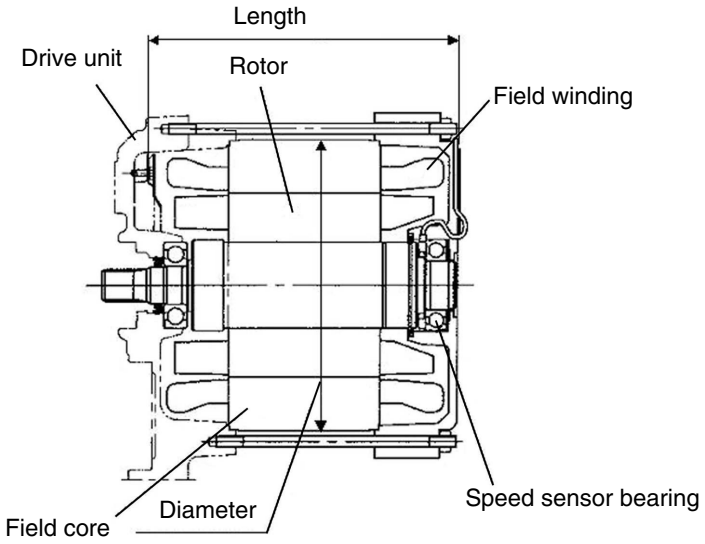

https://truckmanualshub.com/

■ Structure and principle of AC induction motor

AC induction motor has no brushes, commutator and the sliding portion as opposed to the conventional DC motor.

Consequently it has the following characteristics:

1. For the same output, the motor dimensions can be reduced by the portion L for the brushes and commutator.
2. For the same motor dimensions, core dimensions can be increased by the portion L, subsequently increasing the output.
3. Smaller number of parts and no sliding portion make the motor highly reliable.

An optimum AC induction motor has been developed for new models by incorporating these characteristics.

Induction motor	Previous motor (DC motor)
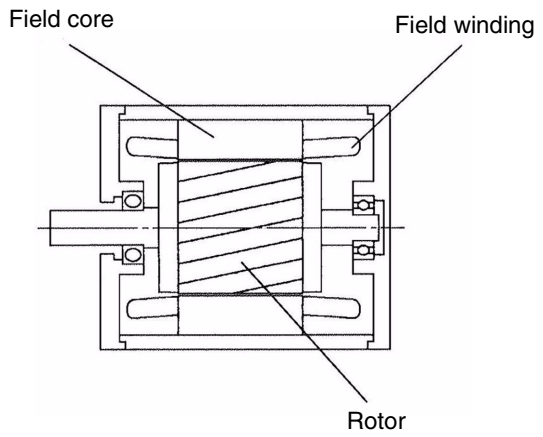	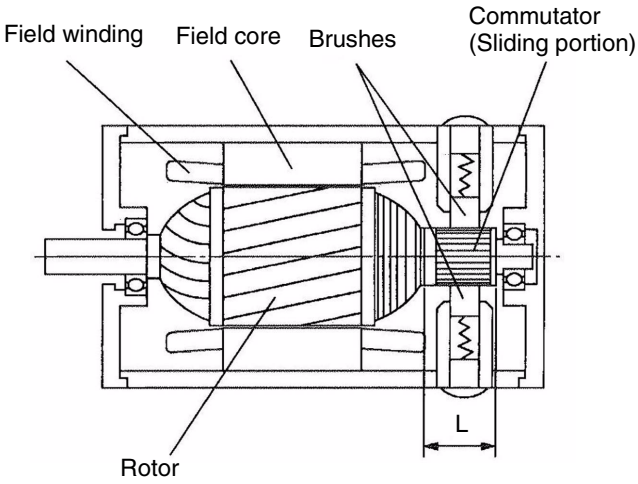

A rotor assembly consists of a number of identical aluminum conductor bars sunk into slots in a laminated steel core, and the end rings that combine both ends of the conductor bars on the sides of the core as shown. Since the bars and the end rings form like a cage for a squirrel or mouse, it is called a cage rotor.

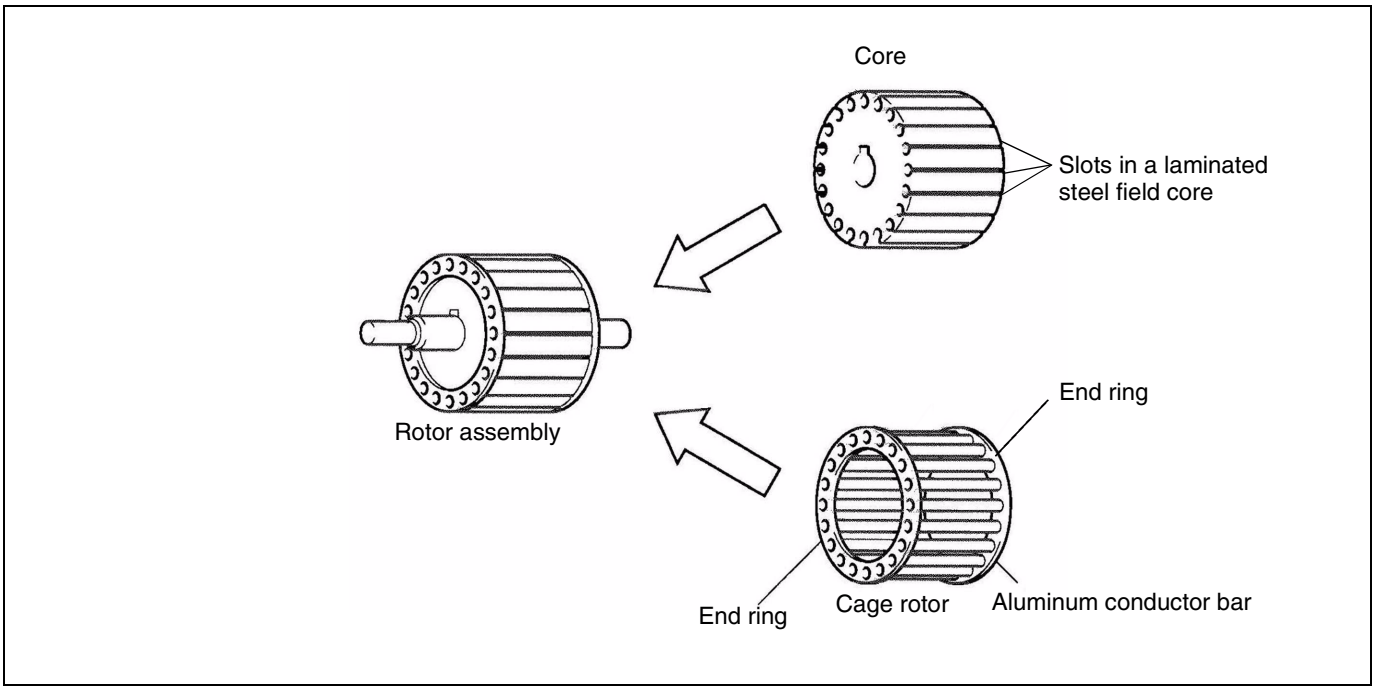

https://truckmanualshub.com/

■ Operational sequence

1. The current flows in a fixed direction in the field winding in the figure. Magnetic field is produced around the field winding in the illustrated direction according to the right-hand rule*, and magnetic poles (N-pole and S-pole) are generated.
2. Now suppose that the magnetic poles are rotated clockwise. Then the bar of the rotor is considered to be rotated to the counterclockwise direction.
3. Now, according to the Fleming's right-hand rule*, electro motive force is generated to the bar of the rotor in the illustrated direction.
4. Because of the electro motive force generated to the bar of the rotor, a clockwise force is generated to the bar according to Fleming's left-hand rule.*
5. Thus rotational torque is generated by electromagnetic force. The rotating speed of rotor is slightly slower than the revolution of the field pole.
6. Actually, the field winding on the periphery is not moving. Sine wave from each phase of the three-phase alternating current produces rotating magnetic field, generating torque to the rotor.

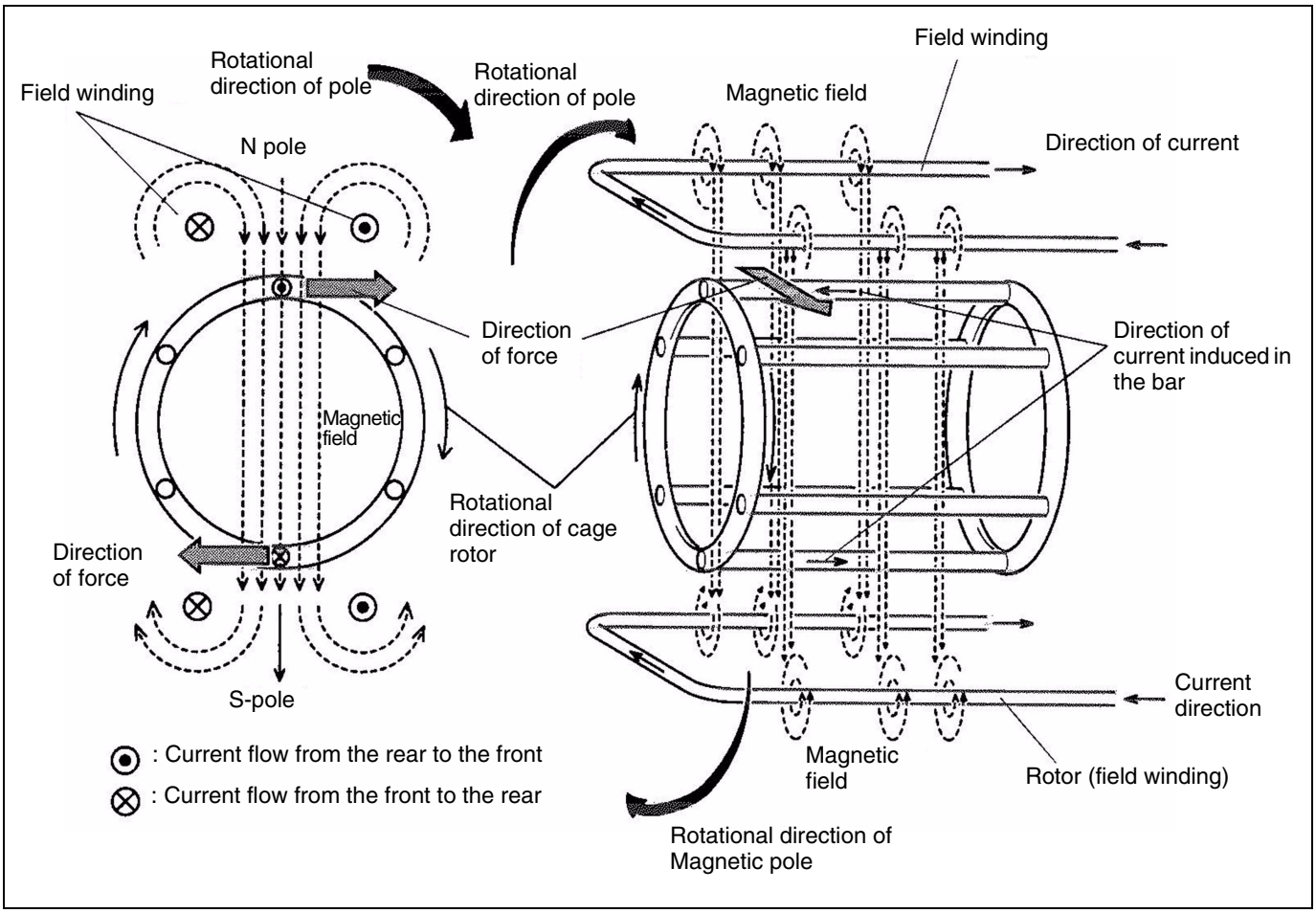

* See the next page.

https://truckmanualshub.com/

■ Operating principle of motor

Before explaining the operating principle of motor, Ampere's right thread rule and Fleming's rule will be explained.

1. Right handed screw rule
   Extend the thumb of the right hand and close the fingers. If you point the thumb in the direction of current flow as illustrated, the magnetic field is produced at right angle to the current direction and in the direction of the closed fingers.

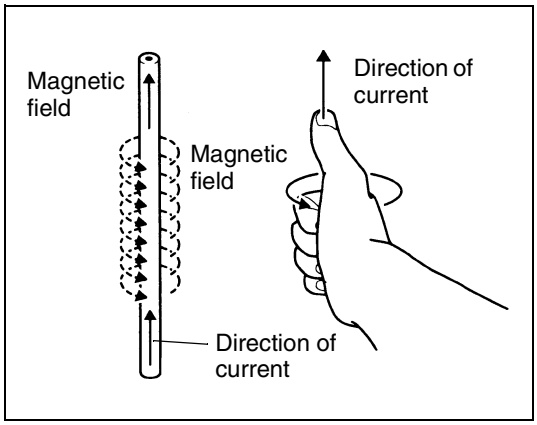

2. Fleming's right-hand rule
   Arrange for a fixed object on which a linear object can freely move as shown. In this state, when the magnetic field is produced in the illustrated direction, moving the linear object in the illustrated direction produces current. The direction of current is as illustrated:

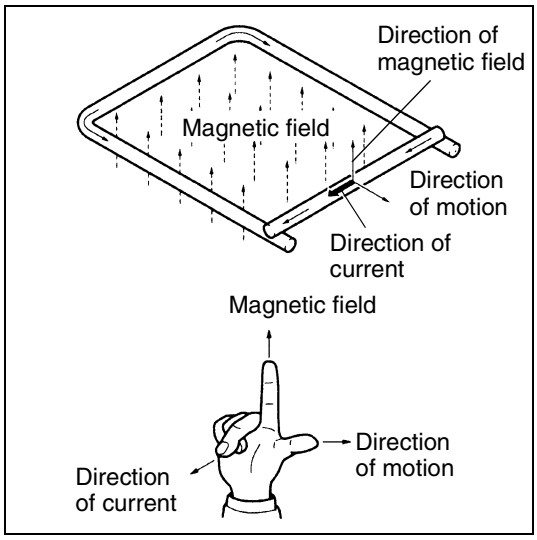

3. Fleming's left-hand rule
   Arrange for a fixed object on which a linear object can freely move as shown. In this state, when the magnetic field is produced in the illustrated direction, current flowing in the fixed object causes a force acts on the linear object in the illustrated direction.

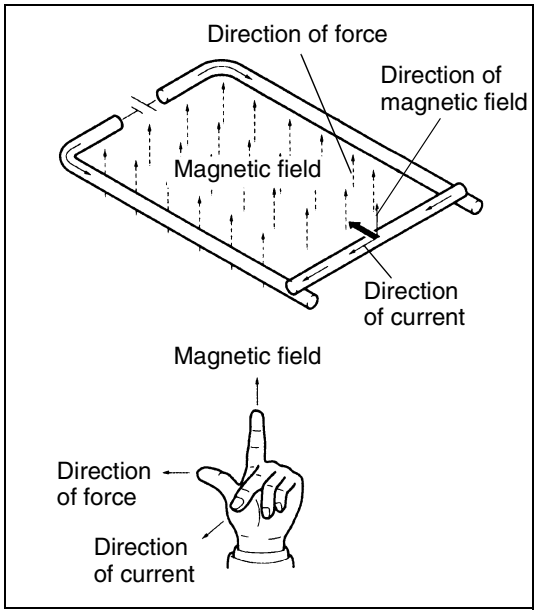

https://truckmanualshub.com/

DRIVE UNIT

■ Features

1. The drive unit has been changed, as follows:

Previous models		New models
4-axes, 3-stages speed reduction	⇨	3-axes, 2-stages speed reduction

2. The parking brake has been set up on the drive motor shaft due to the adoption of the wet brake.
3. New models like the previous models, the drive motor has been installed to the drive unit in “Semi-built-in structure”, on a parallel to the front axle.
4. New models, like the previous models, use the liquid gasket (FIPG) to obtain high sealing effect on the drive unit housing.
5. As the lubricant, use the gear oil suitable for the wet brake.

   Note: Use gear oil only TOYOTA specified:
   SHELL DONAX TD

6. New models like the previous models, helical gear having high transmitting efficiency has been adopted to all the gears.
7. Gear ratio table

	New model			Previous model		
1-ton Series	89/16 × 54/11	=	27.307	52/23 × 62/33 × 45/12	=	15.929
2-ton Series	96/15 × 60/11	=	34.909	52/23 × 62/33 × 45/12	=	15.929
3-ton Series	96/15 × 60/11	=	34.909	56/19 × 62/33 × 45/12	=	20.766
4-ton Series*	88/15 × 51/19	=	15.747	—		

* Without wheel reduction

https://truckmanualshub.com/

Drive unit sectional view

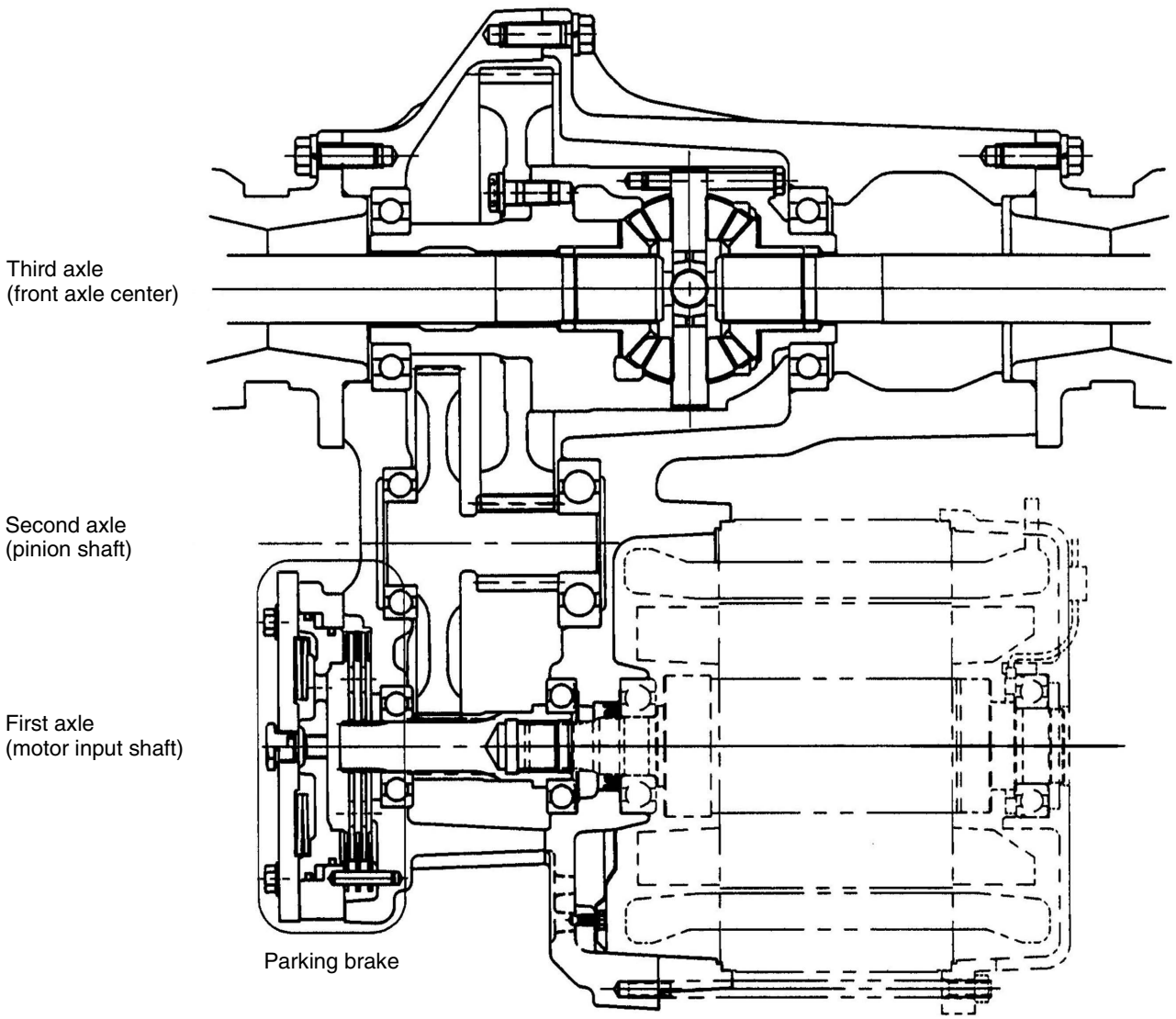

https://truckmanualshub.com/

FRONT AXLE

Difference between previous models and new models

The axle housing and the axle brackets are integrated, and bolted to the drive unit housing. The reactive force vs. the drive-force and the brake effects will be received by the axle bracket mount bolts.

Type of front axle
Semi floating type front axle design has been used for all the models. 7FBMF40, 45 and 50 models use planet gears between the tires and the differential gears.

Front axle (1.6 ~ 3.5 ton)

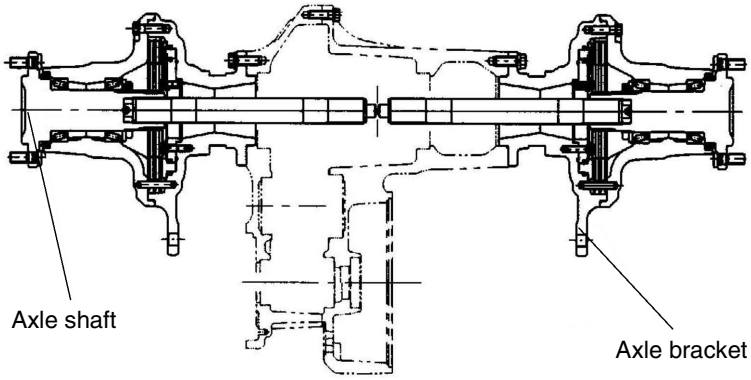

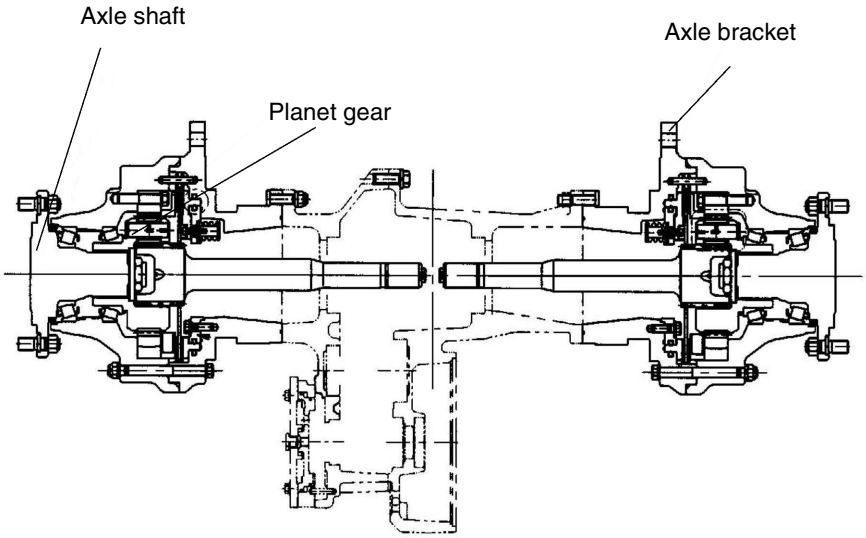

Front axle (4.0 ~ 5.0 ton)

https://truckmanualshub.com/

BRAKE

Difference between previous model and new model

The wet brake has been adopted in place of the dry brake with the result that reliability and durability have been considerably improved, especially against water and mud.
Besides the brake has become free from worn particles out of the brake lining.

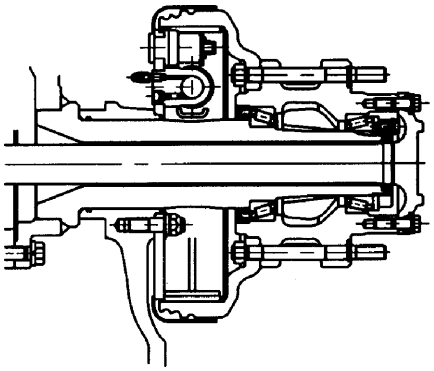

Dry brake

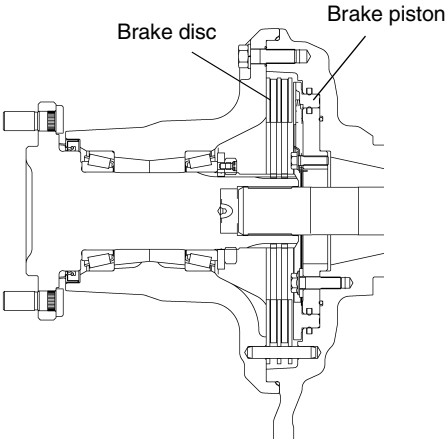

Wet brake (1.6 ~ 2.5 ton)

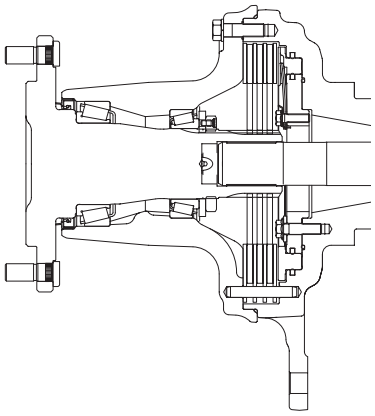

Wet brake (3.0·3.5 ton)

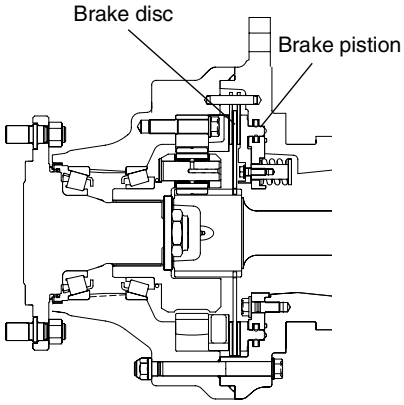

Wet brake (4.0 ~ 5.0 ton)

Brake specification

Item	1.6 ~ 1.8 ton	2.0 ~ 2.5 ton	3.0·3.5 ton	4.0 ~ 5.0 ton
Brake lining dimensions (thickness × outside dia. × inside dia.) mm	0.5 × 221 × 150	←	←	0.8 × 276 × 200
Quantity of brake disk	2 × 2	2 × 2	3 × 2	1 × 2
Brake & drive unit oil	SHELL DONAX TD			

https://truckmanualshub.com/

Brake valve

The full power type brake valve has been adopted for all the models (1.6 to 5.0 ton capacity).

Specification of valve

Item	1.6 ~ 5.0 ton
Type	Full power CHPS
Fluid used	ISO VG#32

1.6 ~ 3.5 ton

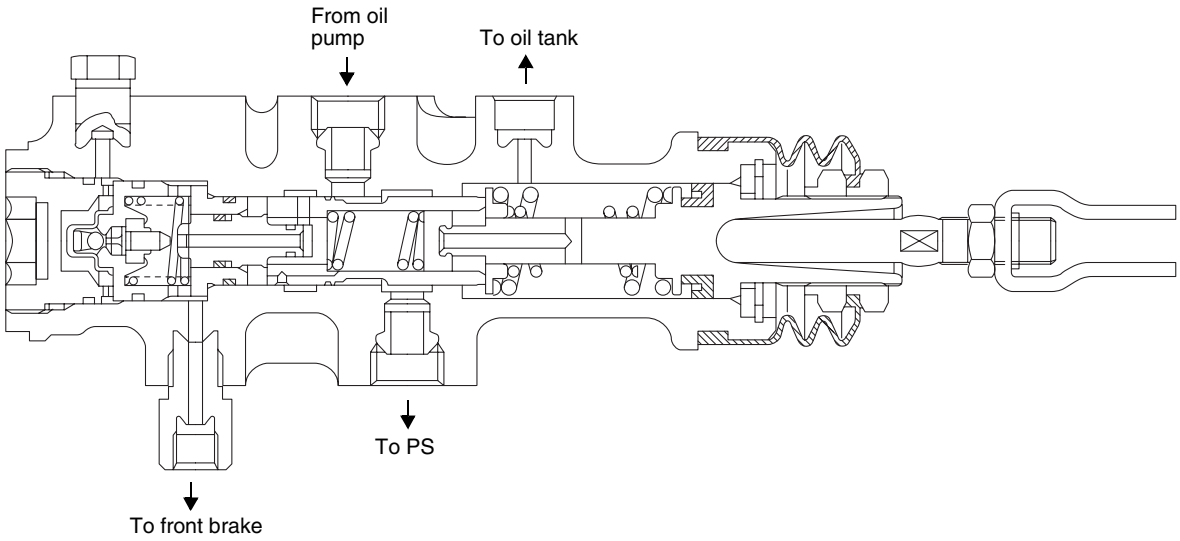

4.0 ~ 5.0 ton

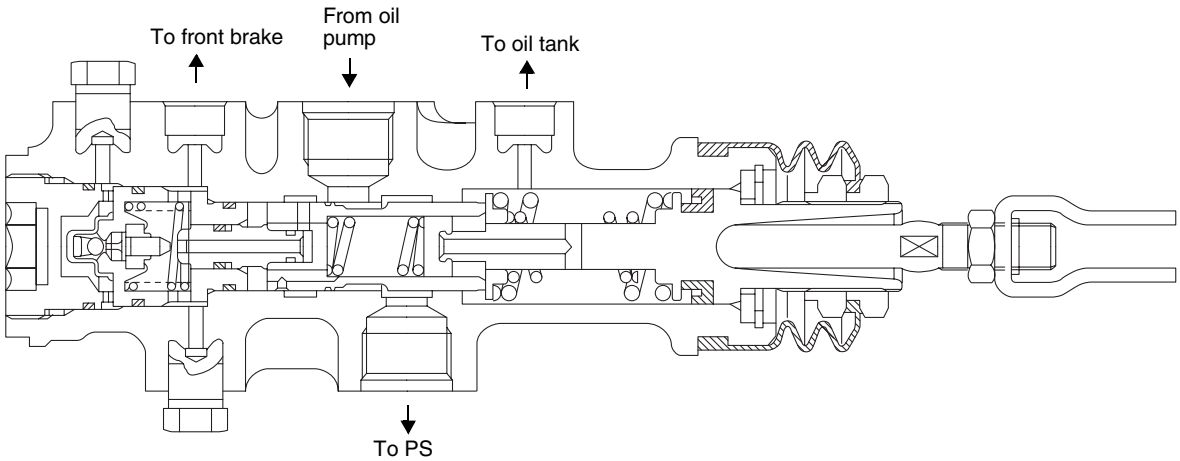

https://truckmanualshub.com/

Note:

1. **Lubricant for brake**
   For the lubrication of the brake discs as well as for the drive gearing, the same oil are used, since the wet brake discs are dipped in gear oil.
   Only TOYOTA specified oil must be used.

   TOYOTA Specified oil: SHELL DONAX TD

   It must be strictly forbidden to use the oil other than those specified by TOYOTA or oil mixed with another since it will give the adverse effect, such as the brake mal-function and the noise occurrence.

2. **Service for brake life**
   In case that the brake has become ineffective or noise should arise, the deterioration of the gear oil and the brake discs can be suspected as the possible causes.
   At the time, the gear oil should be renewed at first. If it is still ineffective, wearing down of the brake discs can be considered. Then the brake discs should be renewed together with the gear oil.

3. **Washing**
   It must be strictly avoided to splash water round the breather (or bleed) plug while washing the truck since water will penetrate into gear oil through the breather plug.

https://truckmanualshub.com/

PARKING BRAKE

The wet disc parking brake has been adopted for all the models (1.6 ~ 5.0 ton).
Specification (for all the models)

Item	1.6 ton ~ 5.0 ton
Parking brake lining dimension Thickness × Outside Dia. × Inside Dia.	0.45 × 136 ×105
Quantity of discs	2
Parking brake oil	SHELL DONAX TD

Function

- Newly designed parking brake system differs from the previous system in that the parking brake force arises when the brake discs are compressed on the motor shaft through the piston pressed by the conical disc springs.
- On turning the parking switch ON, the solenoid valve releases oil in the chamber 'A' so that the force of the conical disc springs will apply the brake.
- On turning the parking switch OFF, pressurized oil is fed to the brake housing from the PS pump through the solenoid valve. Then the conical disc springs are compressed throgh hydraulic pressure so that the brake will be released.

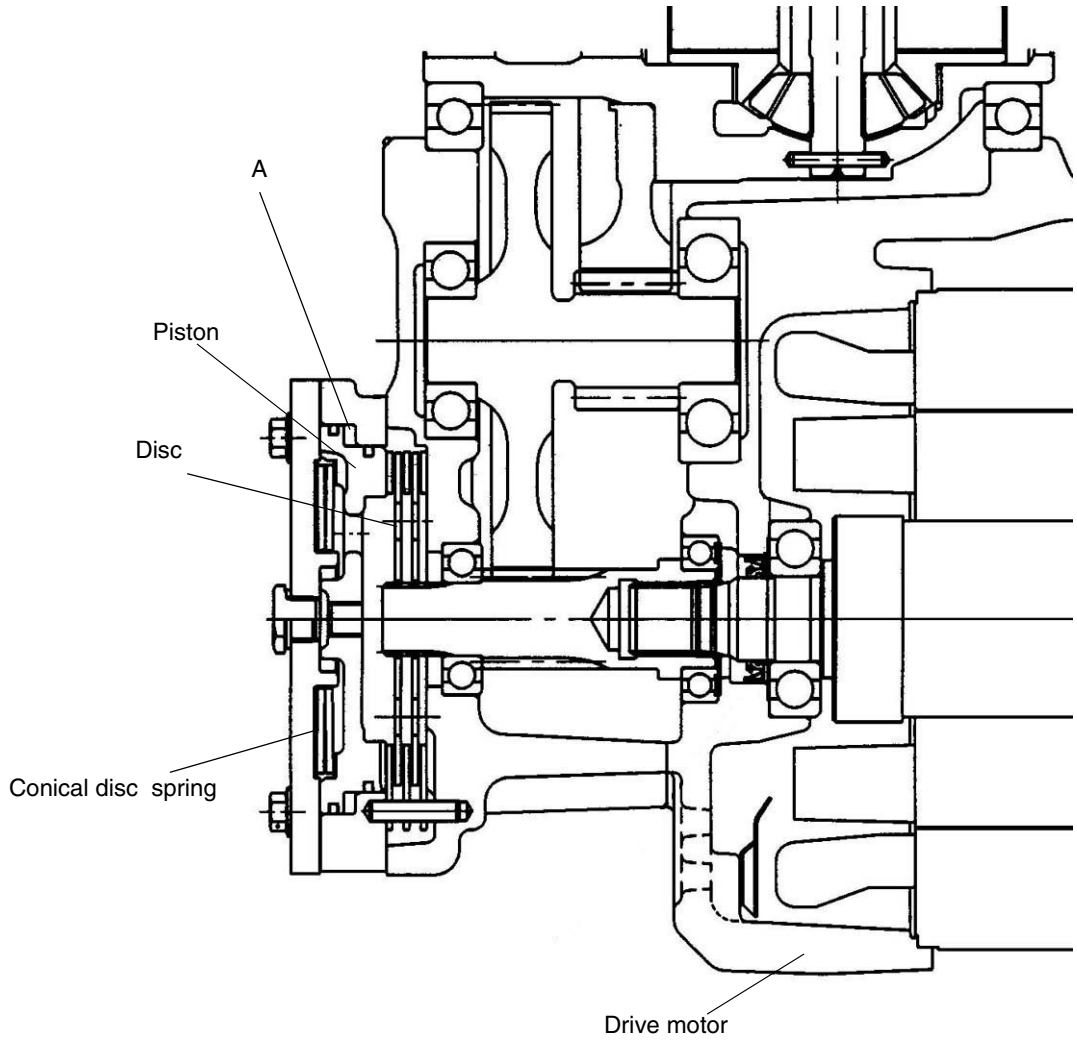

https://truckmanualshub.com/

Parking brake switch

- The parking brake system is actuated by the electrical selector switch as illustrated:

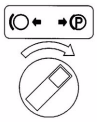

Turn it to the right:
Parking brake on

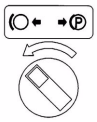

Turn it to the left:
Parking brake release

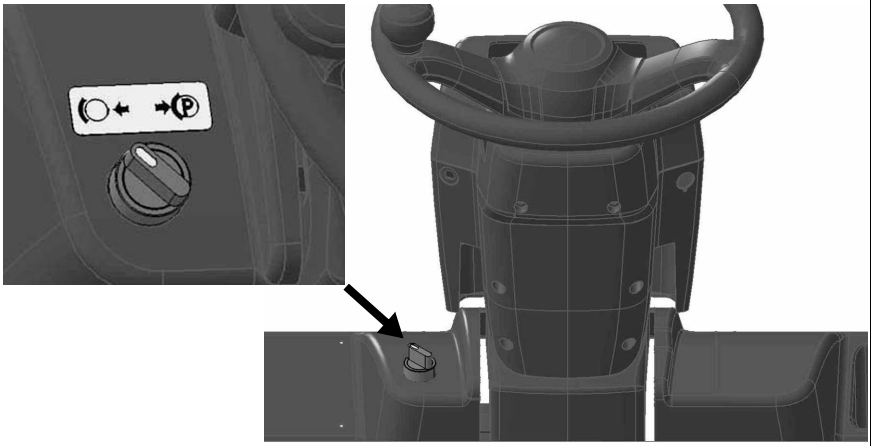

Note:

- **Always stop the truck and turn on the parking brake switch (turn to the right) to engage the parking brake before getting off the vehicle.**
  Check to confirm that the parking brake is engaged.
- **Never turn off the key switch unnecessarily while traveling, because it will cause the truck a sudden stop with a shock.**
- **Never pull off the battery plug while traveling (except in case of emergency), because it will cause the truck a sudden stop with a shock.**
- **It is impossible to release the parking brake if the power steering pump should stop supplying the parking brake with pressurized oil; therefore, in case that the traction of the truck is in urgent need, the parking brake cover plug should be removed to release the parking brake manually with a specified tool (bolt).**

https://truckmanualshub.com/

PARKING BRAKE SYSTEM

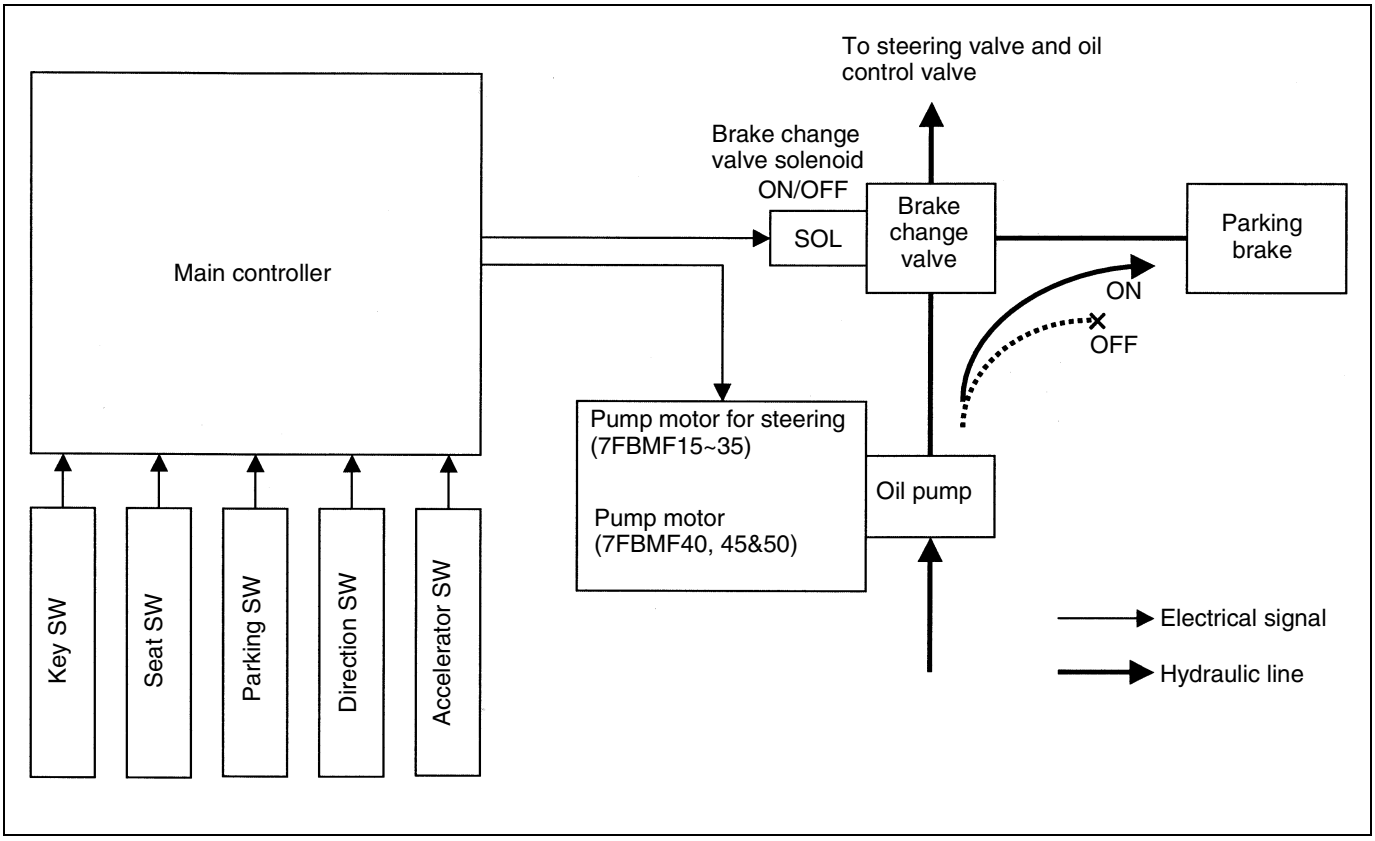

■ Function

1. The parking brake will be released when it receives oil pressure from the brake change valve.
   When it does not take oil pressure, it becomes the condition that a parking brake piston is pressed by the cone spring, and the parking brake is effective.
2. The brake change valve changes an oil way to the parking brake by the solenoid valve.
   Solenoid ON: The parking brake is released as it makes the oil way to the parking brake opened.
   Solenoid OFF: The parking brake is applied as it makes the oil way to the parking brake closed.
3. The motor (The PS motor for 1.6 to 3.5 tons models and the pump motor for 4.0 to 5.0 tons models) starts driving when both the key switch and the direction switch are turned on.
   Then, oil pressure will arise from the oil pump directly connected to the motor.
4. The main control controller controls the solenoid valve by the signals from each switch.

Note: The traveling speed sensor which detects the traveling condition of the vehicle also has relation to the parking brake system through the traveling controller.

https://truckmanualshub.com/

5. To try to travel the vehicle makes the parking brake released.
   When all the following conditions are satisfied, the parking brake is released by turning on the solenoid valve.
   - Turning on the key switch
   - Turning on the seat switch (The seated condition)
   - Shifting the parking switch left (Release side)
   - Turning on the direction switch (Forward or Reverse)
   - Switching on the accelerator (Depressing the accelerator pedal)

   In reverse, either of the following manipulation makes the parking brake operated by changing the solenoid from ON to OFF.
   - Turning off the key switch
   - Shifting the parking switch right (Parking side)

   When the switch other than mentioned above is turned off, the parking brake is not actuated at once but controlled as the following items 6, 7 and 8.
6. When a foot is left from the accelerator pedal during traveling, the parking brake is applied from 10 seconds later after an electric brake acts and the vehicle stops completely.
   And, it is the same when the direction lever is made a neutral position during traveling.
7. Brake control on a slope
   If the accelerator pedal is released with the neutral direction lever position after the vehicle stops on the slope once, the electric brake (the regenerative brake) works for 10 seconds to prevent the truck from going down, and then it makes the parking brake acted in place of the electric brake.
8. If the seat switch is turned off during traveling, the controller considers the condition as an emergent situation, and it makes the parking brake acted by changing the solenoid valve from ON to OFF as soon as the vehicle stops by the electric brake.

https://truckmanualshub.com/

BRAKE PEDAL

- 1.6 ~ 3.5 ton
  New models use the pendent type brake pedal in place of the step down type brake pedal on the previous models.
- 4.0 ~ 5.0 ton:
  The pendent type brake pedal and the double link mechanism have been adopted.

Regenerative sensor

The limit switch has been adopted for reliability as that of the previous model, and sensing ability has been improved.
When the readjustment is required for the regenerative brake, service accessibility is good.

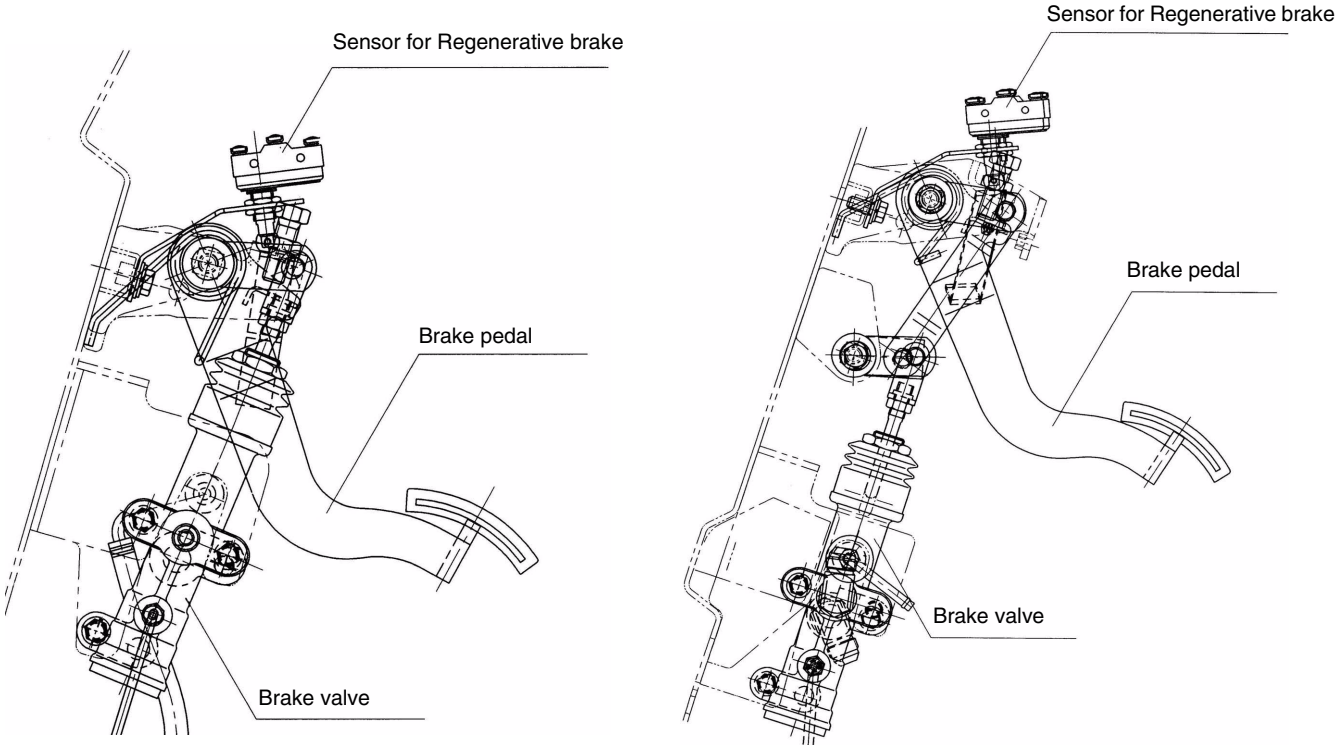

Brake pedal (1.6 ton ~ 3.5 ton)

Brake pedal (4.0 ton ~ 5.0 ton)

https://truckmanualshub.com/

STEERING & REAR AXLE

Page

STEERING 6-2

REAR AXLE (1.6 ~ 3.5 ton model) 6-5

REAR AXLE (4.0 ~ 5.0 ton model) 6-7

https://truckmanualshub.com/

STEERING

■ 1.6 ~ 3.5 ton

Power steering system

New models like the previous models have adopted Electronically controlled fully-Hydraulic Power Steering (EHPS) as the standard equipment.

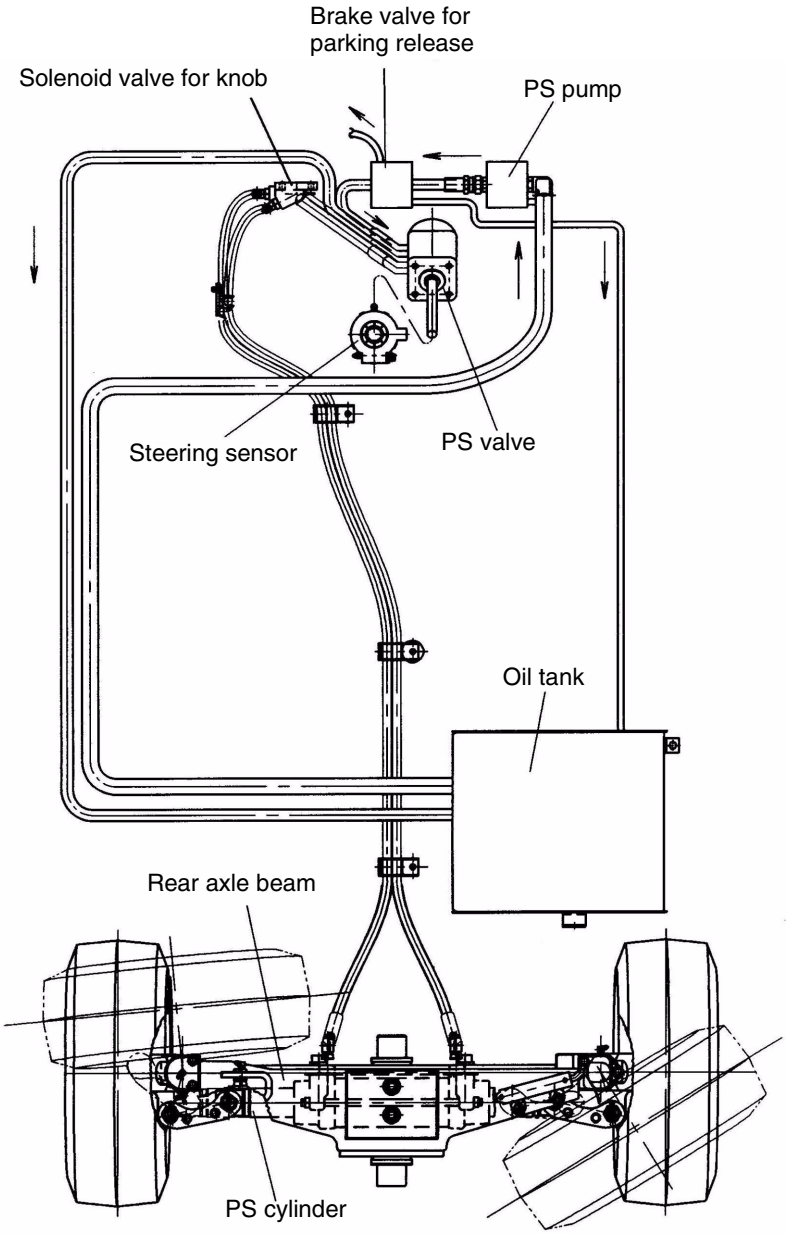

https://truckmanualshub.com/

Principle of EHPS (Electronically controlled full-Hydraulic Power Steering)

1. The steering sensor will defect the steering wheel revolution speed without mechanical contact while the operator rotating the steering wheel.
2. In the meantime, the detected speed is turned into electronic pulse signals and being sent to the controller.
3. The controller will adjust the current being supplied to the power steering motor corresponding to the pulse signals.
4. Thus the adequate power steering motor speed in response to the steering manipulation can be obtained.

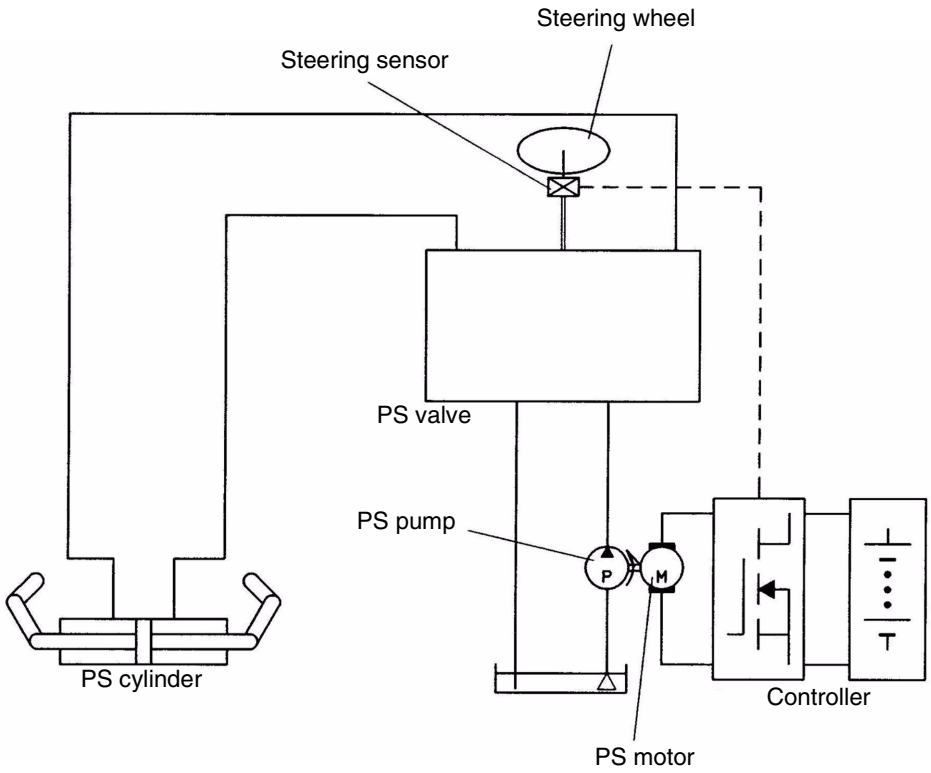

https://truckmanualshub.com/

■ 4.0 ~ 5.0 ton

Power steering system
Fully hydraulic power steering has been adopted as the standard equipment.

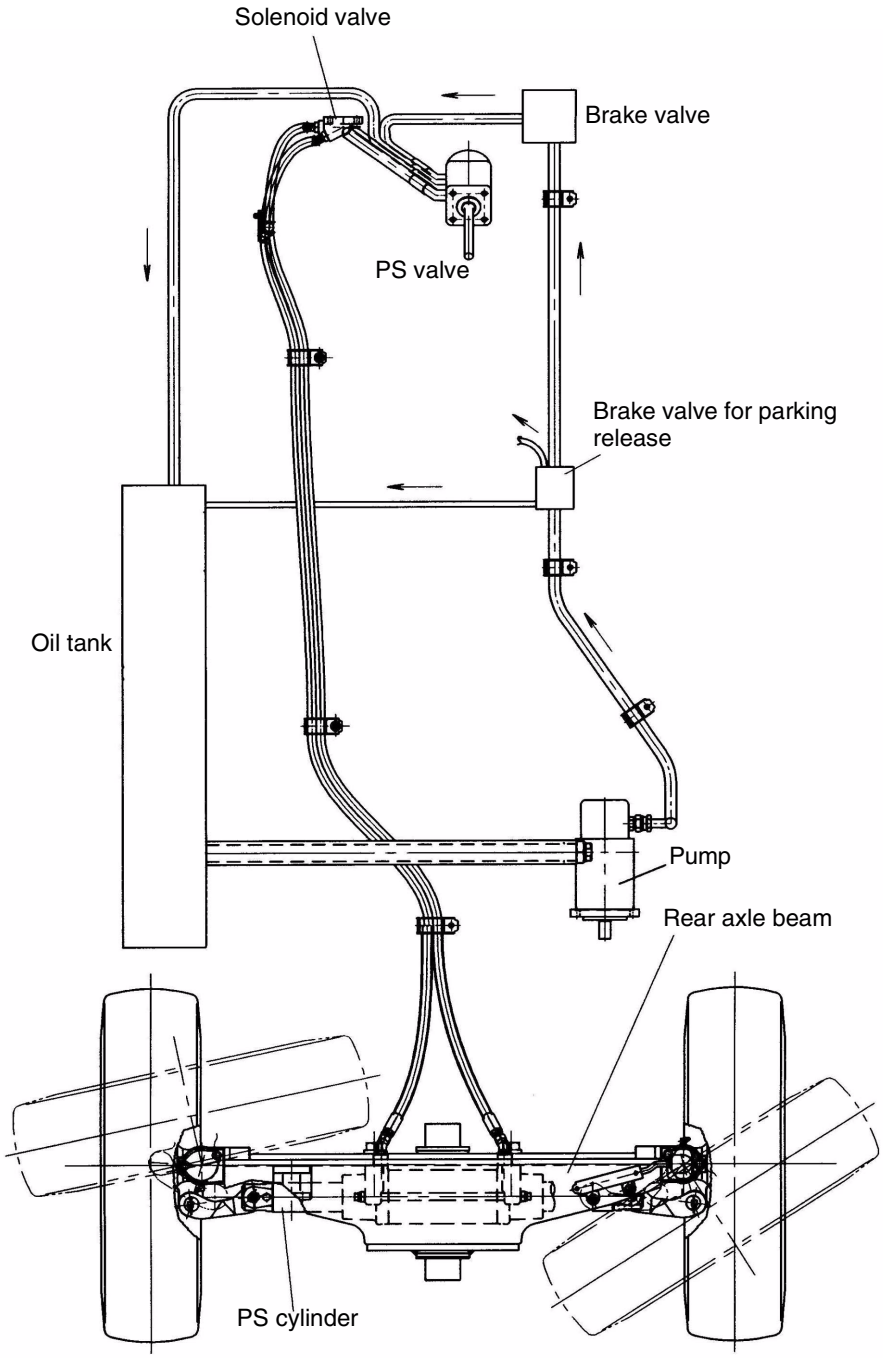

■ Power Steering valve (PS valve)

1. When the truck is running straight forward (or when the steering wheel is not in operation), the power steering valve absorbs the reaction from the tires before it is transmitted to the steering wheel.
2. When the battery voltage is stopped, the power steering valve works instead of the pump by making the manual steering circuitry.

https://truckmanualshub.com/

REAR AXLE (1.6 ~ 3.5 ton model)

The structure of the rear axle for the new models is similar to that of the previous FBMF series. As the illustration shows, the lock cylinder rod mount clevis has been added on the portion (B) for the active rear stabilizing control. The rear axle cylinder mount pins (A) are eccentric in shape so that the wheel angle can be adjusted by rotating the eccentric pin as illustrated on the next page.

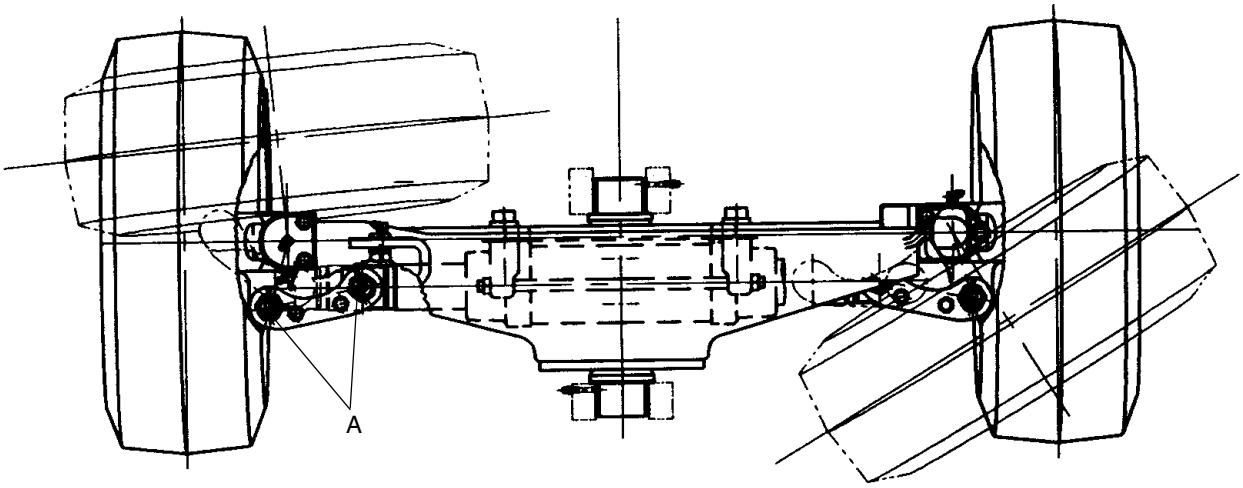

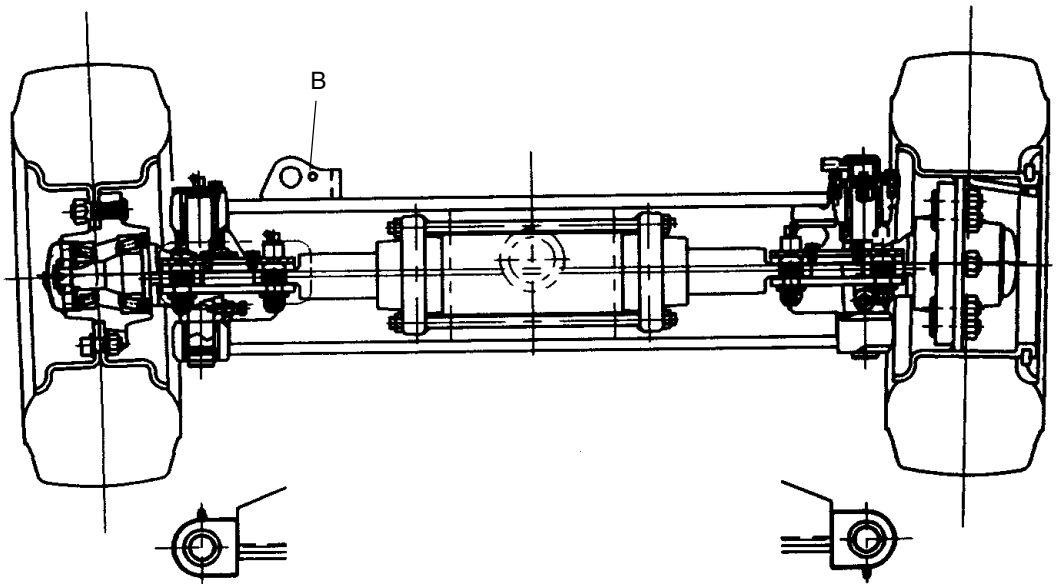

https://truckmanualshub.com/

Rotation of cylinder pin	0° (min.) ~ 360° (max.)
Tire angle adjustment range	Toe-in side: Approx. 1.5°
	Toe-out side: Approx. 1°

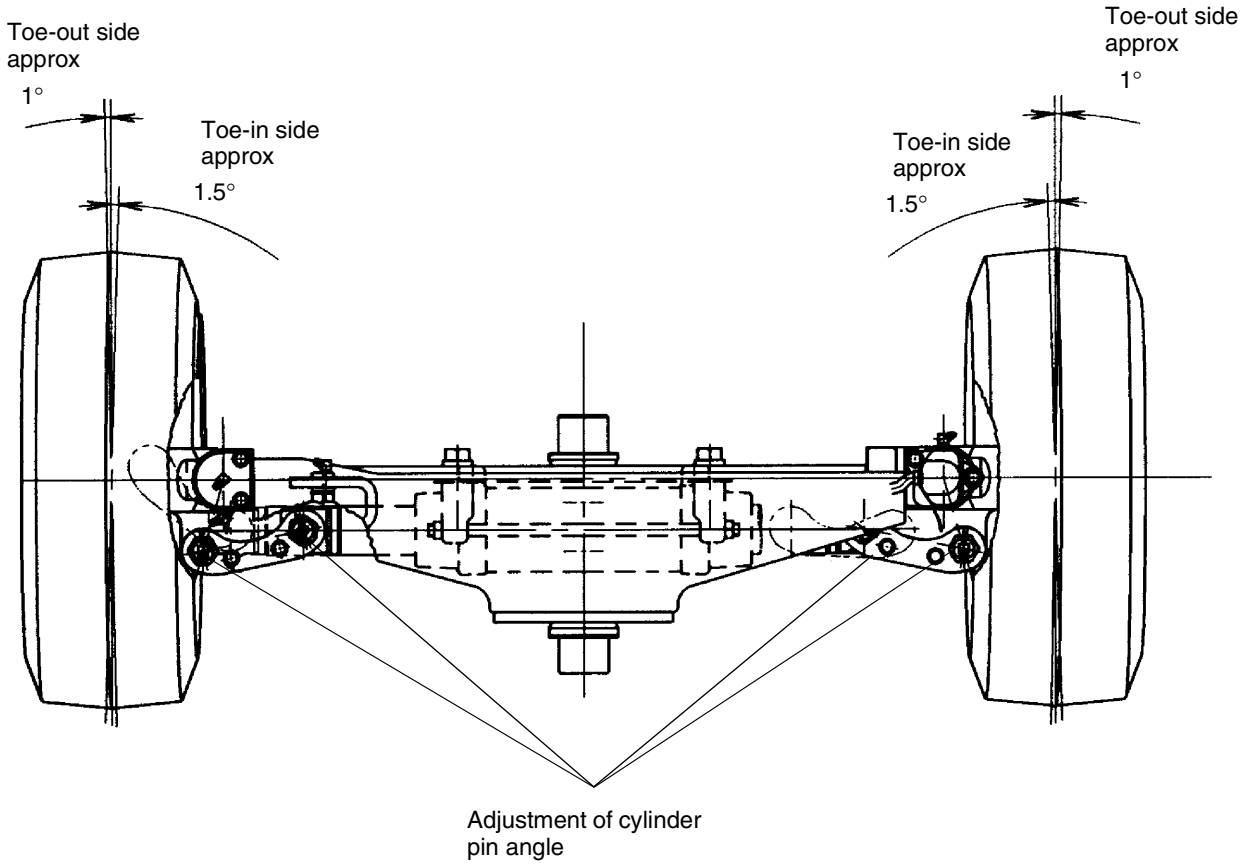

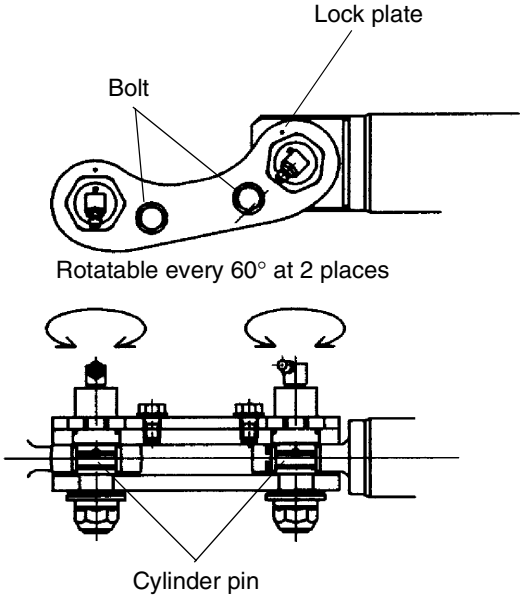

https://truckmanualshub.com/

REAR AXLE (4.0 ~ 5.0 ton model)

The rear axle assembly parts are similar to those of 7FB35 series.

1. The rear axle can be lubricated with grease at 12 points (A1 ~ A12) shown in the illustration, while steerig the rear axle to the left and right.
2. For active control rear stabilizing, a lock cylinder rod mounting clevis has been added at point B.
3. The rear axle cylinder mount pins (A) are eccentric in shape so that the wheel angle can be adjusted by the rotating the pin angle as illustrated on the next page.

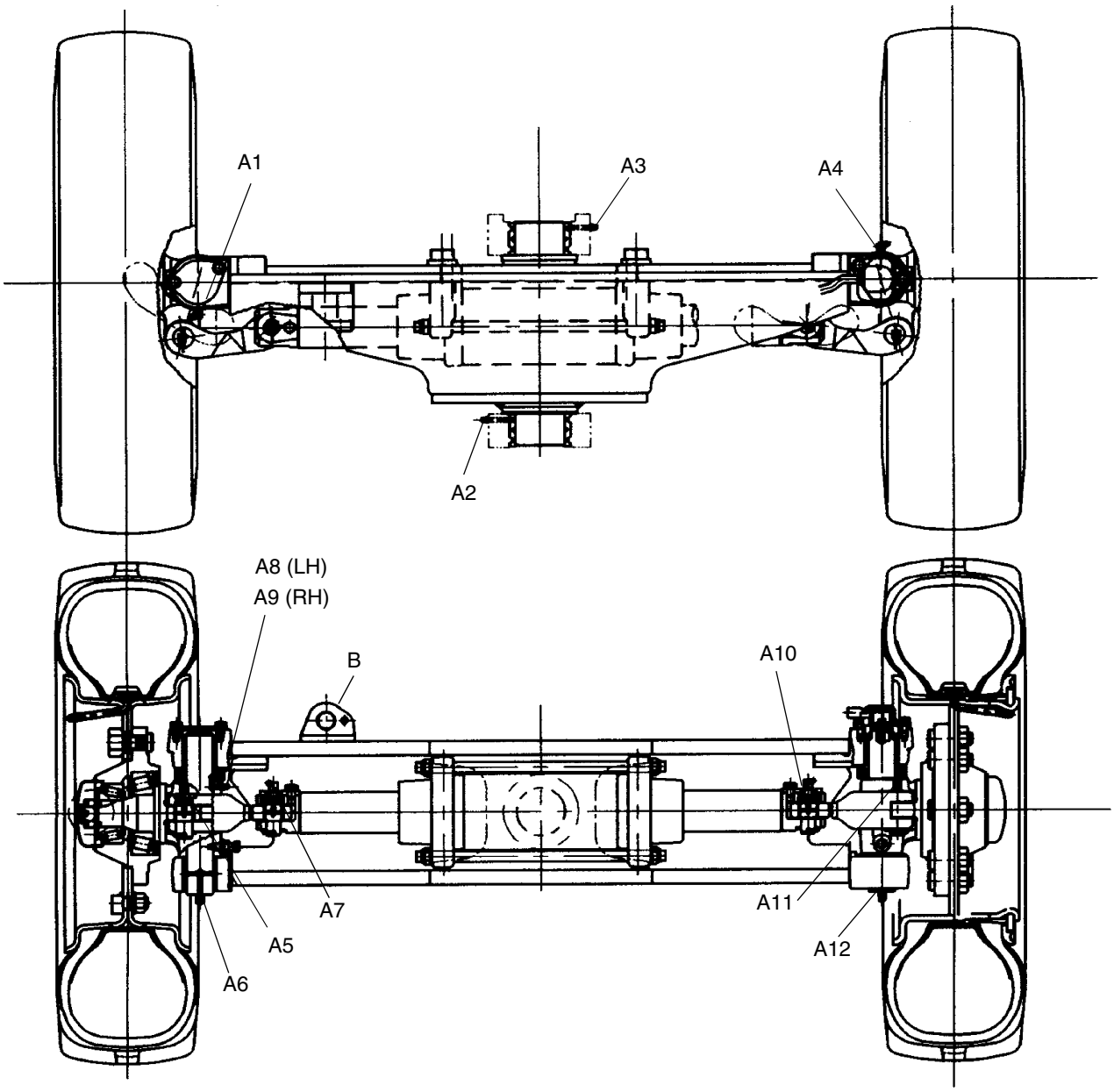

https://truckmanualshub.com/

Rotation of cylinder pin	0° (min.) ~ 360° (max.)
Tire angle adjustment range	Toe-in side: Approx. 1.5°
	Toe-out side: Approx. 1°

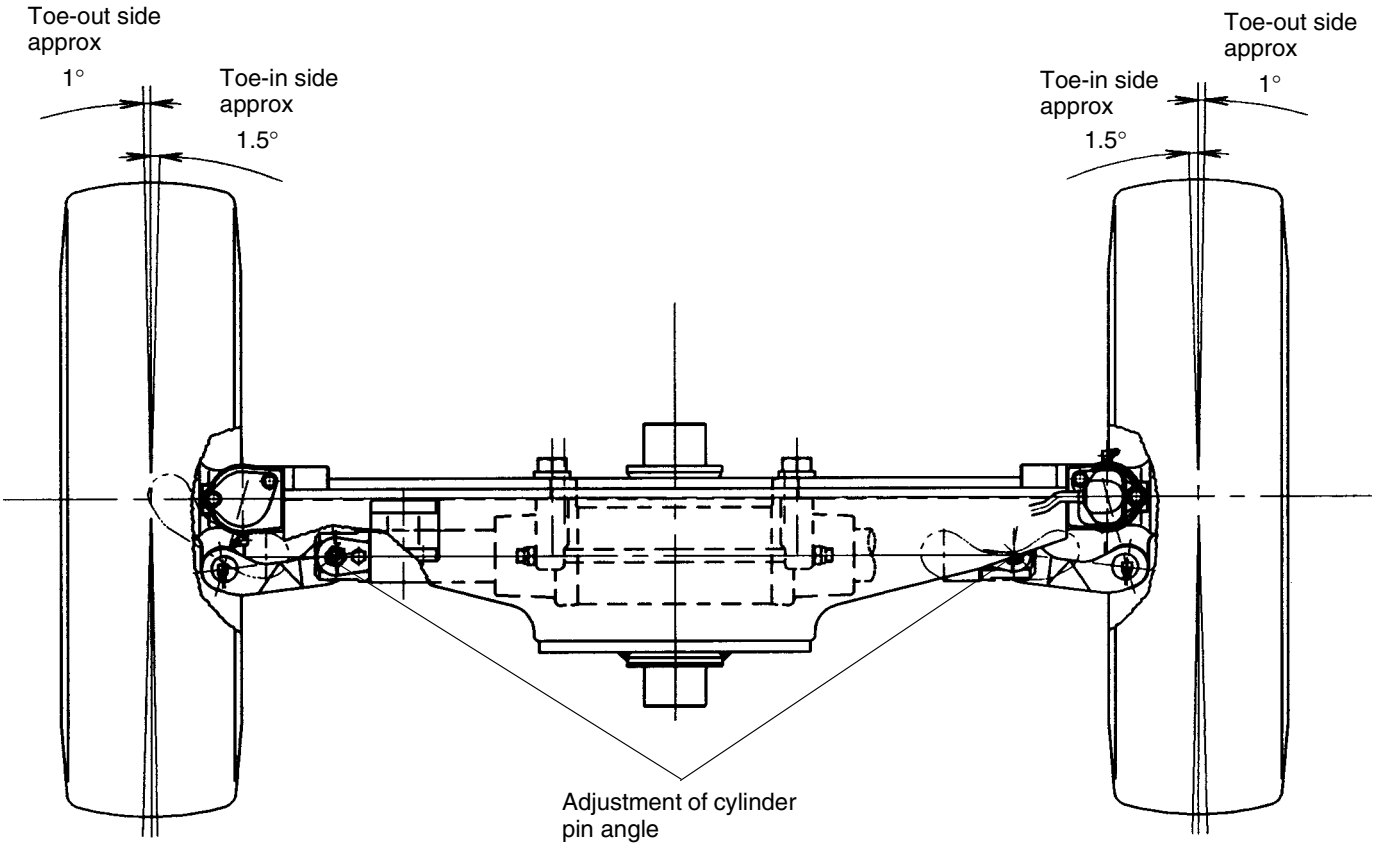

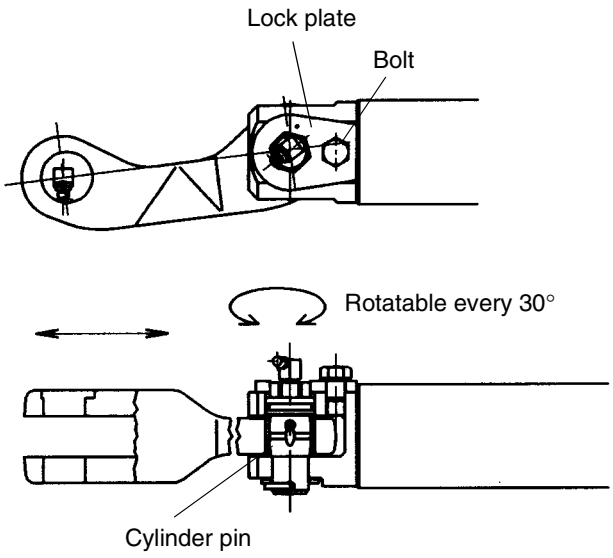

https://truckmanualshub.com/

TIRES

Page

SPECIFICATIONS 7-2

7FBMF16 ~ 35 Tire Specifications 7-2

7FBMF40, 7FBMF45, and 7FBMF50

Tire Specification 7-3

SPECIFICATION TABLE 7-5

7FBMF16·18·20·25·30·35 7-5

7FBMF40·45·50 7-6

https://truckmanualshub.com/

SPECIFICATIONS

7FBMF16 ~ 35 Tire Specifications

■ General

- New models like previous models have adopted the pneumatic shaped cushion tire.
- A pneumatic tire is available as the option for 7FBMF16, 7FBMF18, 7FBMF20, and 7FBMF25 models.
- The wide tread specifications are available as the option for 7FBMF16 ~ 35 with the standard size.
- The oversize front tire is available as the option for 7FBMF16, 7FBMF18 and 7FBMF20.

Note: See the table on page 7-5 for the further detail.

■ Front tire

Table 1 7FBMF16 and 7FBMF18 front tire

		Standard Tire		Over size Tire	
		Standard Tread	Wide Tread	Standard Tread	Wide Tread
Tire Size		21 × 8-9	21 × 8-9	6.50-10	
Tread (Front)	mm	920	975	945	
Overall Width	mm	1115	1170	1110	

Table 2 7FBMF20 front tire

		Standard Tire		Over size Tire	
		Standard Tread	Wide Tread	Standard Tread	Wide Tread
Tire Size		21 × 8-9	21 × 8-9	23 × 9-10	23 × 9-10
Tread (Front)	mm	975	1100	975	1100
Overall Width	mm	1170	1300	1175	1300

Table 3 7FBM25 front tire

		Standard Tire		Over size Tire	
		Standard Tread	Wide Tread	Standard Tread	Wide Tread
Tire Size		23 × 9-10	23 × 9-10		
Tread (Front)	mm	975	1100		
Overall Width	mm	1170	1300		

https://truckmanualshub.com/

Table 4 7FBMF30 and 7FBMF35

		Standard Tire		Over size Tire	
		Standard Tread	Wide Tread	Standard Tread	Wide Tread
Tire Size		23 × 10-12	23 × 10-12		
Tread (Front)	mm	970	1070		
Overall Width	mm	1220	1320		

■ Rear tire

Table 5 7FBMF16~35 rear tire

		7FBMF16·18·20	7FBMF25	7FBMF30·35
Tire Size		5.00-8	18 × 7-8	18 × 7-8
Tread (Rear)	mm	895	940	940

7FBMF40, 7FBMF45, and 7FBMF50 Tire Specification

■ General

- New models have adopted the pneumatic shaped cushion tire.
- A pneumatic tire is available as option (except for the tire size 28 × 12.5-15).
- The dual tire is available as the option.

Note: See the table on page 7-6 for the further details.

7

■ Front tire

Table 6 7FBMF40, 7FBMF45, and 7FBMF50 single tire

		7FBMF40	7FBMF45		7FBMF50
		All Mast	V Mast & FV Mast	FSV Mast	All Mast
Tire Size		250-15	250-15	28 × 12.5-15	28 × 12.5-15
Tread (Front)	mm	1120	1120	1150	1150
Overall Width	mm	1345	1345	1440	1440

■ Rear tire

Table 7 7FBMF40, 7FBMF45, 7FBMF50 rear tire

Tire \ Model		7FBMF40·45·50
Tire Size		7.00-12
Tread (Rear)	mm	1100

https://truckmanualshub.com/

Note:
- **Front tire wheels are not interchangeable between the new models and the previous models.**
- **The interchangeability of the rear wheels between the new models and the previous models is as shown in Table 8.**
- **The truck with the non-marking white tires should be equipped with the earth band for grounding where the working floor has high friction factor such as resin coat, because the condition has high potential to generate static electricity.**

Table 8 Interchangeability of the rear wheel

○ : Interchangeable × : Not interchangeable

		Previous model			
		FBMF16	FBMF20	FBMF25	FBMF30
New model	Tire size	5.00-8	18 × 7-8	18 × 7-8	18 × 7-8
7FBMF16	5.00-8	○	—	—	—
7FBMF18	5.00-8	○	—	—	—
7FBMF20	5.00-8	○	×	×	—
7FBMF25	18 × 7-8	—	×	×	—
7FBMF30	18 × 7-8	—	—	—	×
7FBMF35	18 × 7-8	—	—	—	×

https://truckmanualshub.com/

SPECIFICATION TABLE

7FBMF16·18·20·25·30·35

MODEL CLASS B			SPECIFICATION TABLE (TIRES)										
						MODEL							
TIRE NAME		TIRE SPEC.	TIRE SIZE	RIM SPEC.	RIM SIZE	7FBMF16	7FBMF18	7FBMF20	7FBMF25	7FBMF30	7FBMF35	TIRE BRAND	WIDE TREAD
PNEUMATIC SHAPED CUSHION	FR	SINGLE TIRE	21x8-9/6.00	SIDERING	9x6.00E	STD	STD	STD				WATTS	OPT
		SINGLE TIRE	6.50-10/5.00	SIDERING	10x5.00F	OPT	OPT					WATTS	
		SINGLE TIRE	23x9-10/6.50	SIDERING	10x6.50F			OPT	STD			WATTS	OPT
		SINGLE TIRE	23x10-12/8.00	SIDERING	12x8.00G					STD	STD	WATTS	OPT
PNEUMATIC	FR	SINGLE TIRE	21x8-9-14PR	SIDERING	9x6.00E	OPT	OPT	OPT				WATTS	OPT
		SINGLE TIRE	6.50-10-14PR	SIDERING	10x5.00F	OPT	OPT					WATTS	
		SINGLE TIRE	23x9-10-18PR	SIDERING	10x6.50F			OPT	OPT			WATTS	OPT
NON-MARKING WHITE	FR	SINGLE TIRE	21x8-9	SIDERING	9x6.00E	OPT	OPT	OPT				WATTS	
		SINGLE TIRE	23x9-10	SIDERING	10x6.50F				OPT			WATTS	
		SINGLE TIRE	23x10-12	SIDERING	12x8.00G					OPT	OPT	WATTS	

						MODEL						
TIRE NAME		TIRE SPEC.	TIRE SIZE	RIM SPEC.	RIM SIZE	7FBMF16	7FBMF18	7FBMF20	7FBMF25	7FBMF30	7FBMF35	TIRE BRAND
PNEUMATIC SHAPED CUSHION	RR	SINGLE TIRE	5.00-8/3.00	DIVIDED	8x3.00D DT	STD	STD	STD				WATTS
		SINGLE TIRE	5.00-8/3.00	SIDERING	8x3.00D TB	OPT	OPT	OPT				WATTS
		SINGLE TIRE	18x7-8/4.33	DIVIDED	8x4.25 DT				STD			WATTS
		SINGLE TIRE	18x7-8/4.33	SIDERING	8x4.33R TB				OPT	STD	STD	WATTS
PNEUMATIC	RR	SINGLE TIRE	5.00-8-8PR	DIVIDED	8x3.00D DT	OPT	OPT					WATTS
		SINGLE TIRE	5.00-8-8PR	SIDERING	8x3.00D TB	OPT	OPT					WATTS
		SINGLE TIRE	5.00-8-10PR	SIDERING	8x3.00D			OPT				WATTS
		SINGLE TIRE	18x7-8-16PR	DIVIDED	8x4.25 DT				OPT			WATTS
		SINGLE TIRE	18x7-8-16PR	SIDERING	8x4.33 TB				OPT			WATTS
NON-MARKING WHITE	RR	SINGLE TIRE	5.00-8/3.00	DIVIDED	8x3.00D DT	OPT	OPT	OPT				WATTS
		SINGLE TIRE	5.00-8/3.00	SIDERING	8x3.00D TB	OPT	OPT	OPT				WATTS
		SINGLE TIRE	18x7-8/4.33	DIVIDED	8x4.25 DT				OPT			WATTS
		SINGLE TIRE	18x7-8/4.33	SIDERING	8x4.33R TB				OPT	OPT	OPT	WATTS

https://truckmanualshub.com/

7FBMF40·45·50

MODEL CLASS B			SPECIFICATION TABLE (TIRES)								
						MODEL					
TIRE NAME		TIRE SPEC.	TIRE SIZE	RIM SPEC.	RIM SIZE	7FBMF40	7FBMF45 V,FV MAST	7FBMF45 FSV MAST	7FBMF50	TIRE BRAND	COMMENTS
PNEUMATIC SHAPED CUSHION	FR	SINGLE TIRE	250-15/7.00	SIDERING	15x7.00T	STD	STD (*1)			WATTS	(*1): Case of D56A choice selects (*2)
		SINGLE TIRE	28x12.5-15/9.75	SIDERING	15x9.75		OPT	STD	STD	WATTS	
							(*2)				(*2): Matching automatically with D56A (Except F00D)
		DUAL TIRE	7.00-15/5.5	SIDERING	15x5.5	OPT	OPT	OPT	OPT	WATTS	
PNEUMATIC	FR	SINGLE TIRE	250-15-18PR	SIDERING	15x7.00T	OPT	OPT (*1)			WATTS	(*1): NA D56A
		DUAL TIRE	7.00-15-12PR	SIDERING	15x5.5	OPT	OPT	OPT	OPT	WATTS	
NON-MARKING WHITE	FR	SINGLE TIRE	250-15/7.00	SIDERING	15x7.00T	OPT	OPT (*1)			WATTS	(*1): NA D56A

						MODEL					
TIRE NAME		TIRE SPEC.	TIRE SIZE	RIM SPEC.	RIM SIZE	7FBMF40	7FBMF45 V,FV MAST	7FBMF45 FSV MAST	7FBMF50	TIRE BRAND	COMMENTS
PNEUMATIC SHAPED CUSHION	RR	SINGLE TIRE	7.00-12/5.00	DIVIDED	12x5.00S DT	STD	STD	STD	STD	WATTS	
		SINGLE TIRE	7.00-12/5.00	SIDERING	12x5.00S TB	OPT	OPT	OPT	OPT	WATTS	
PNEUMATIC	RR	SINGLE TIRE	7.00-12-12PR	DIVIDED	12x5.00S DT	OPT	OPT	OPT		WATTS	
		SINGLE TIRE	7.00-12-12PR	SIDERING	12x5.00S TB	OPT	OPT	OPT		WATTS	
		SINGLE TIRE	7.00-12-14PR	SIDERING	12x5.00S TB				OPT	WATTS	
NON-MARKING WHITE	RR	SINGLE TIRE	7.00-12/5.00	DIVIDED	12x5.00S DT	OPT	OPT	OPT	OPT	WATTS	
		SINGLE TIRE	7.00-12/5.00	SIDERING	12x5.00S TB	OPT	OPT	OPT	OPT	WATTS	

https://truckmanualshub.com/

OPERATOR'S COMPARTMENT

Page

OPERATOR'S COMPARTMENT 8-2

DRIVING POSITION..... 8-3

SEAT 8-4

ACCELERATOR PEDAL..... 8-6

DIRECTION SWITCH 8-7

INSTRUMENT PANEL 8-8

https://truckmanualshub.com/

OPERATOR'S COMPARTMENT

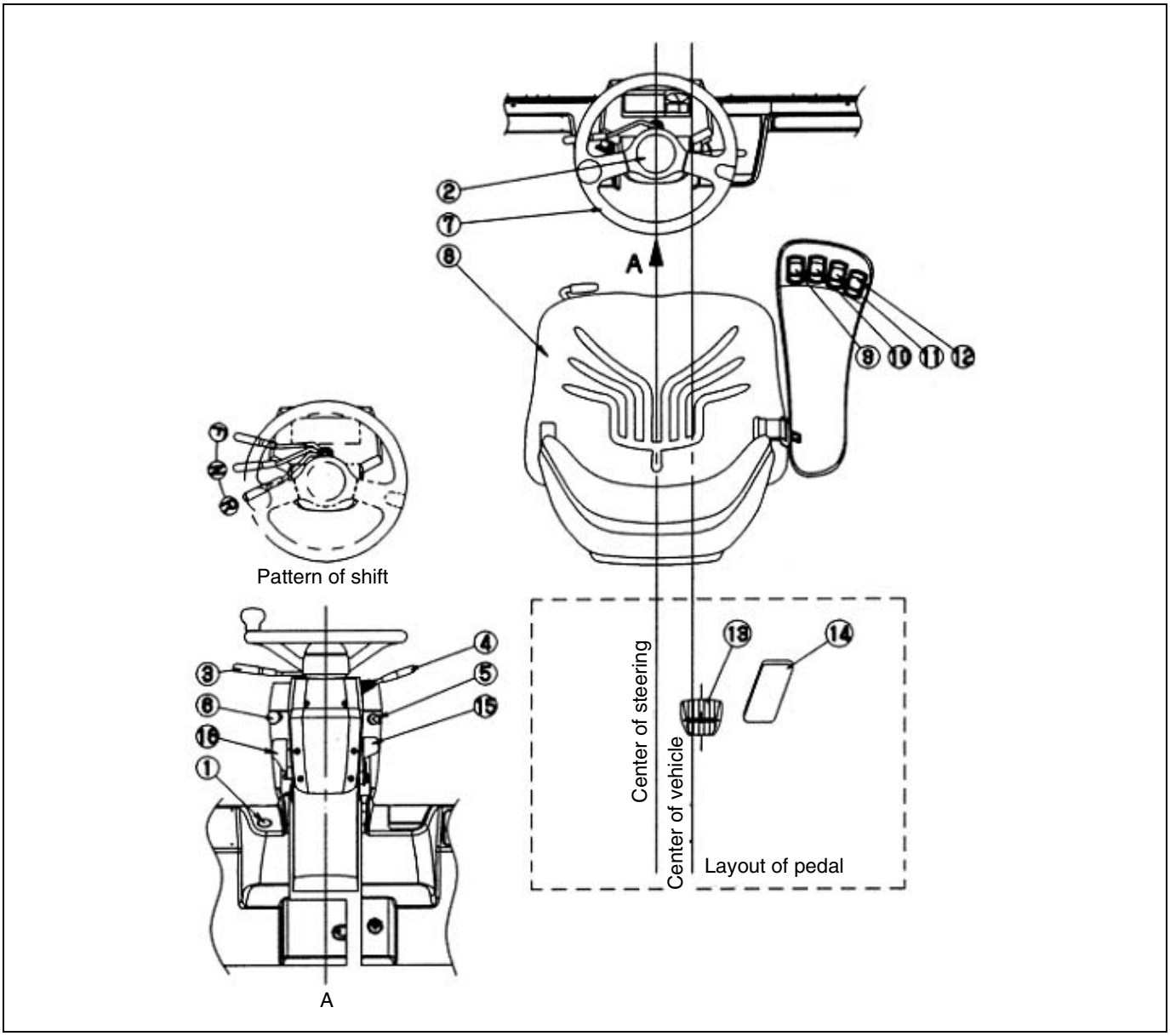

No.	NAME	No.	NAME
1	Parking switch	9	Control lever (Lift)
2	Horn switch	10	Control lever (Tilt)
3	Direction lever	11	Control lever (Attachment)
4	Turn signal switch (OPT)	12	Control lever (Attachment)
5	Ignition key switch	13	Brake pedal
6	Light switch	14	Accelerator pedal
7	Steering wheel	15	Tilt steering lock lever
8	Seat	16	Seat stand release lever

https://truckmanualshub.com/

DRIVING POSITION

The new model mounted with the battery assembly underfloor room creates the ample foot space, contributing to the operation comfort. (The same as that of 7FB25 having established evaluation in the market.)

The enlarged distance between the operator's seat and the accelerator pedal (with FBMF series in comparison) will relieve the operator of ankle fatiguing by daily work.

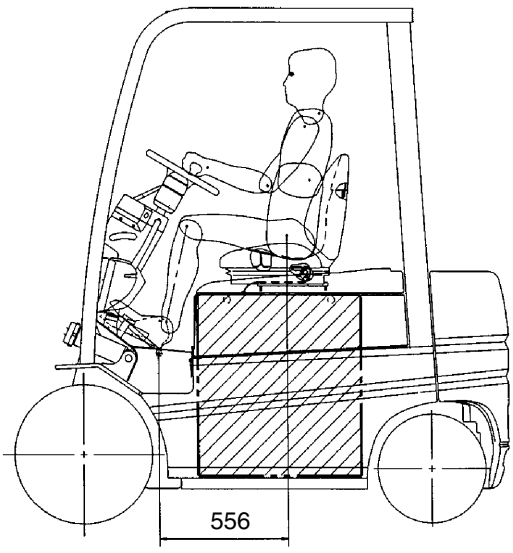

Previous model (FBMF25)

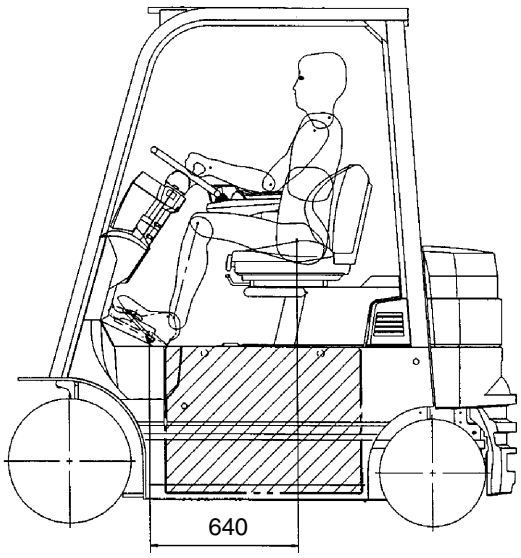

New model (7FBMF25)

https://truckmanualshub.com/

SEAT

The same seat as 7FGF25 series has been adopted to 7FMF16 to 50. (The same seats have had an established reputation by the name of Grammer seat).
The new seat is provided with the seat switch function.

Features:

1. ORS (Operator Restrain System)
   If the truck should tip over, ORS will protect the operator by restraining means.
2. Side support with gripping hole
   - Operator support in case of emergency
   - Used as a grip when getting on
3. The seat belt:
   - ELR type (Emergency Locking Retractor)
4. Adjustment function of seat back tilt angle
   Forward 5°/Backward 5°
5. Dial-type suspension adjustment mechanism
   - The knob position is in front of the seat.
   - The adjustable body weight range for the suspension is from 50 kg to 130 kg.
6. Seat switch
   The seat switch is built-in.
7. Bull mark
8. Fabric seat is available as an option.

https://truckmanualshub.com/

■ Seat stand opening & closing

Procedure:
Open and close the seat stand by the following procedure.

<7FBMF16~35>

1. Move the mini lever box to the rearmost position.
2. Slide the seat to the foremost position.
3. Pull the lock release lever, and tilt the steering post forward.
4. Open the seat stand.

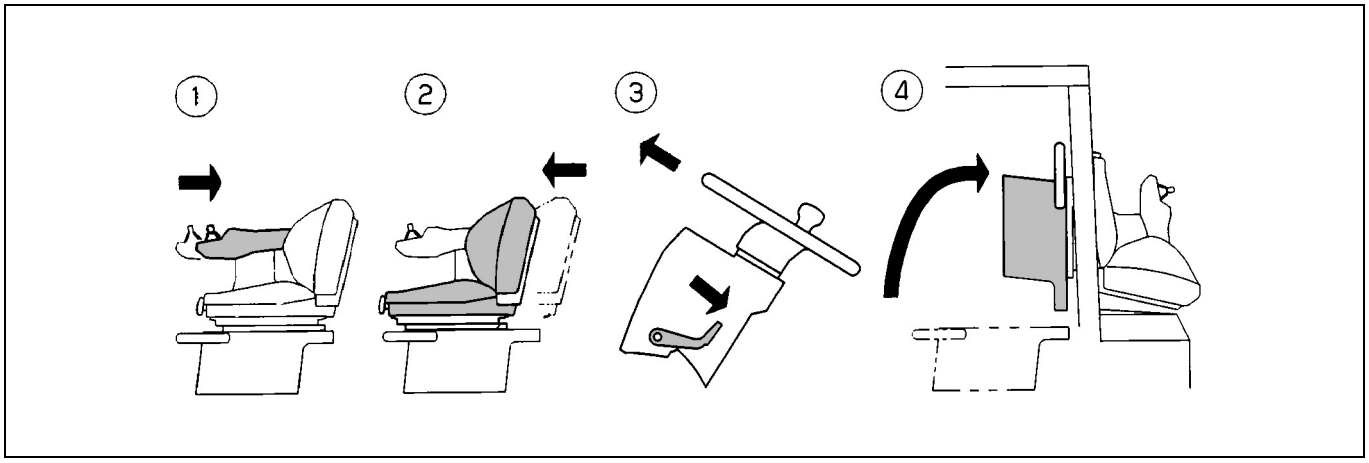

<7FBMF40~50>

1. Tilt up the mini lever box fully to the backward.
2. Slide the seat to the rearmost position.
3. Pull the lock release lever, and tilt the steering post forward.
4. Open the seat stand.

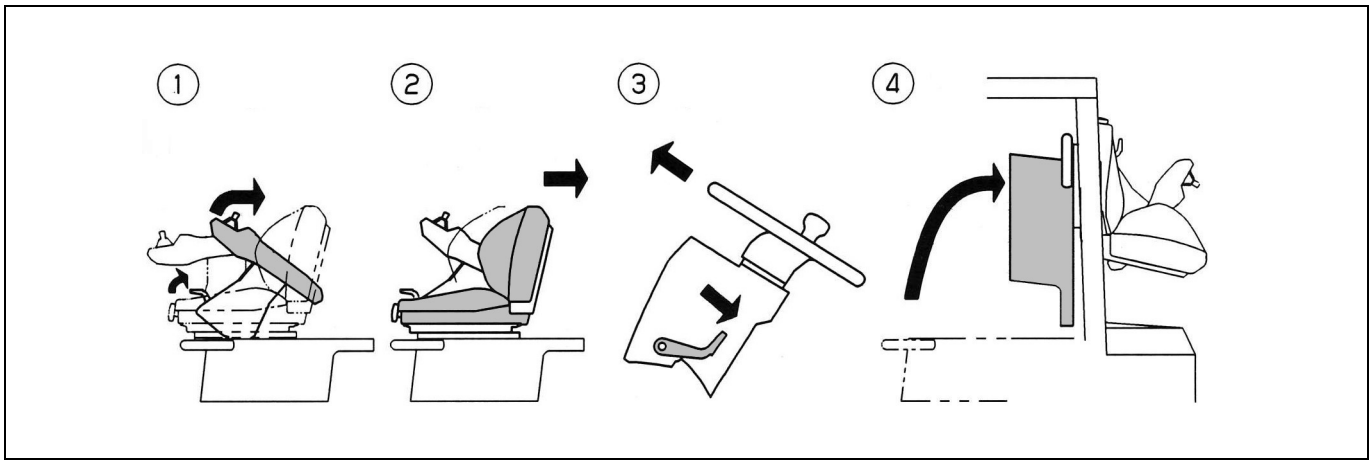

https://truckmanualshub.com/

ACCELERATOR PEDAL

The accelerator pedal is installed on the front toe board.
The feeling of initial operation became smoother thanks to the resin mold pedal.
With the enlarged (A) pedal stroke angle combined with the change of the seated position (See Page 8-3), the ankle will be relieved of fatigue.

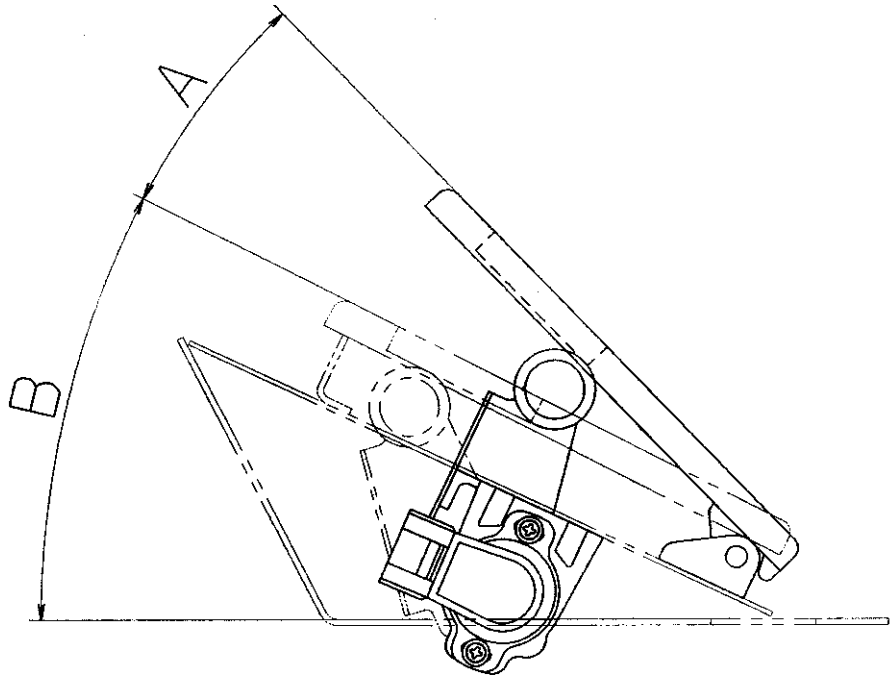

	New model	Previous model
Pedal operating angle(A)	19°	15°
Pedal stroke end angle(B)	27°	25°

https://truckmanualshub.com/

DIRECTION SWITCH

- A finger touch type direction switch has been adopted to reduce the force needed for operation and to make it easier to operate with the fingertips (same as in previous model).
- An exclusive resin knob, similar to that of turn signal switch, is used at the lever tip to improve the design around the steering wheel (same as in current model).
- The direction switch lever is always on LH side (same as current model).

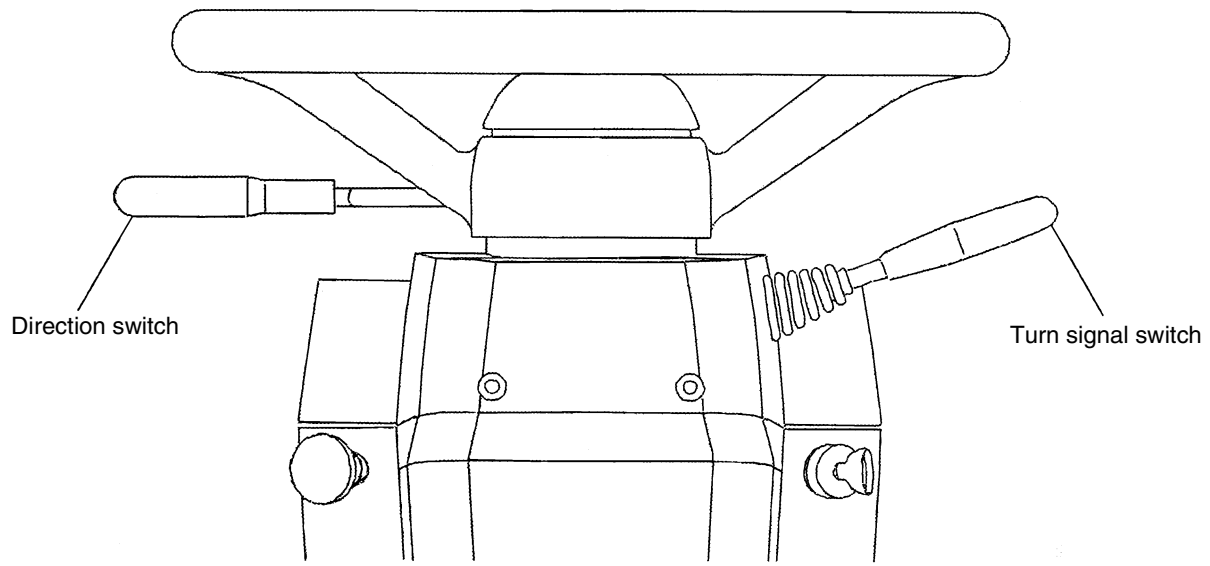

https://truckmanualshub.com/

INSTRUMENT PANEL

■ Instrument panel

- Resin fabrication realized new design.
- The instrument panel consists of two pieces on 7FBM16 to 35 and three pieces, on 7FBMF40 to 50. The quality of the material is excellent in intensity and is made from eco-friendly polypropylene.
- The instrument panel is furnished with the holder as the standard provision.

7FBMF 16 ~ 35

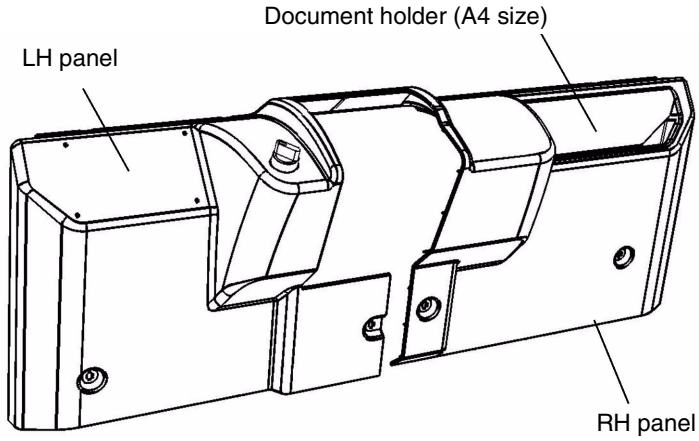

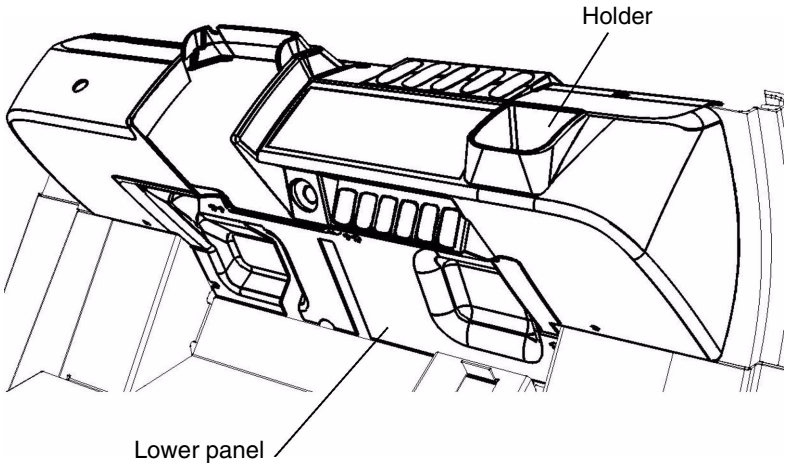

■ Lower panel (or lower part of panel)

The lower panel covers the area between the instrument panel and the toe board. Thereby, following improvements are made:

- Components, such as the link mechanism, are protected from dirt or mud.
- The foot area became spacious with operational ease.

https://truckmanualshub.com/

BODY & ACCESORIES

Page

NOTICES-HOIST AND JACK POSITION 9-2

BODY & FRAME 9-3

ACCESSORIES 9-6

Lights 9-6

https://truckmanualshub.com/

NOTICES-HOIST AND JACK POSITION

1. Hoisting by holding the mast and the rear wheels
   When hoisting the vehicle, hold the front by the outer mast top tie beam, and the rear by the rear tire wheels.
   Never use overhead guard or counter weight to hoist the vehicle.

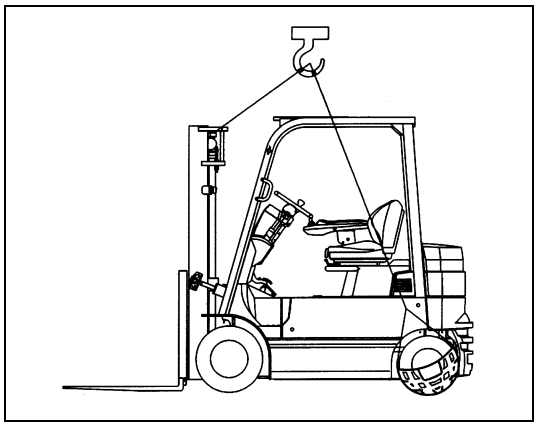

2. Lifting truck with a jack

(1) Jacking points on the front side are provided on the bottom surface of the frame structure behind the front tires.

(2) Note the following about the jacking point:
   - Position a jack under the frame structure at a point that is 150 mm (5.9 in) or closer to the fender.
   - Do not work under a truck supported by a jack only.
   - Always support the truck with blocks or stands when you are working on it.
   - For information on the jacking point on the rear side, refer to the next page explaining the counter weight.

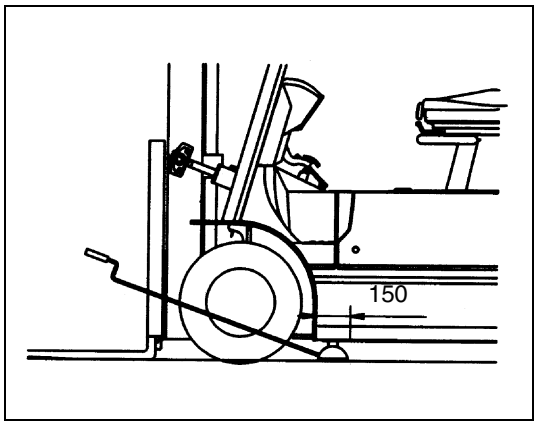

https://truckmanualshub.com/

BODY & FRAME

■ Fender

As for the wide tread/specs., (2.0 to 3.5 ton) and the dual tire specs (4.0 to 5.0 ton), the fenders are bolted on the body frame to cover the front wheels.

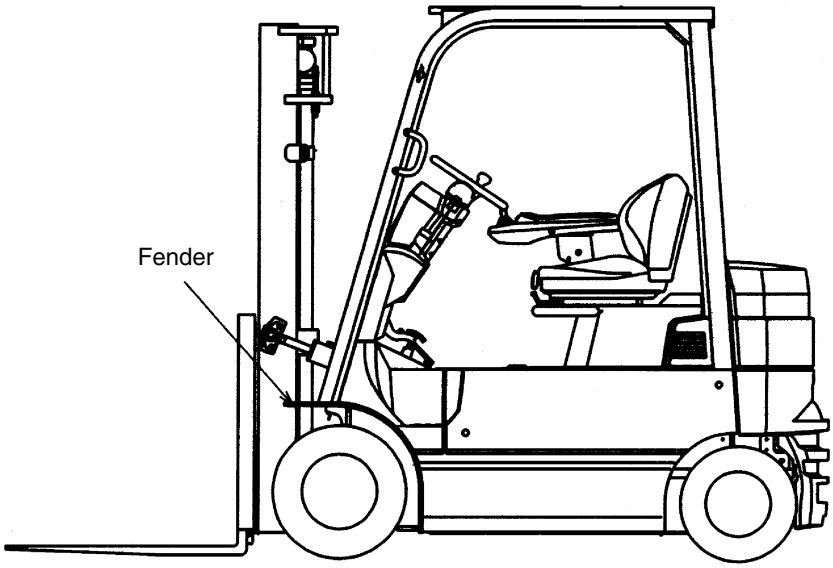

■ Counterbalance weight

In the previous models, the controller is enclosed in the counterbalance weight.
In the new models, the controller is installed into the partition covered by the seat stand to protect it from getting wet.

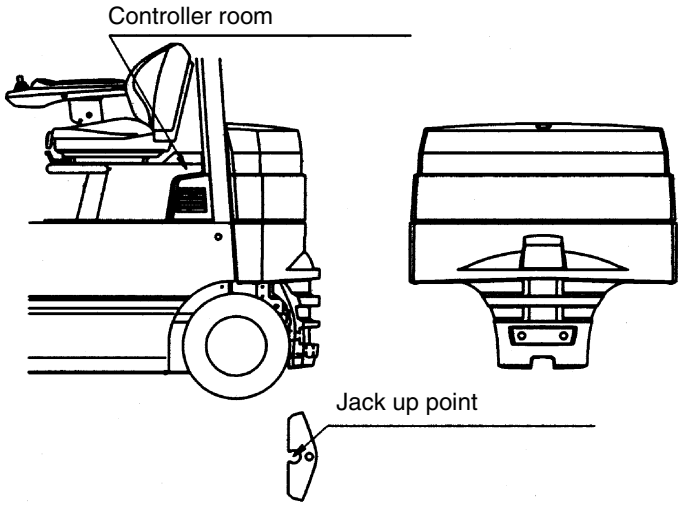

The jack point is made for the new models on the undersurface of the counterbalance weight in a concave form.

https://truckmanualshub.com/

■ Step

7FBMF 16 ~ 35

- Aiming at unique, and unchangeable cleanliness desirous for the electric forklift trucks, the step on the LH side has been made from resin compound, so that the step has become corrosion free and water clean feature.
- Further, the step surface forms a number of the skid proof holes for a safety ride.

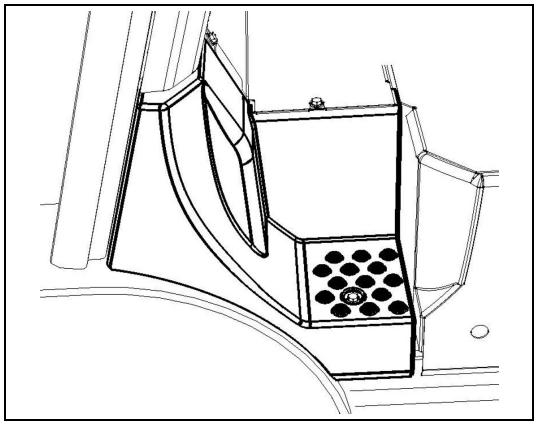

7FBMF30

- The height of the step for 7FBMF30 become lower than that of the previous model so that the auxiliary step has been dispensed with.

7FBMF40, 45, 50

- Easy to get on due to wide open step area and the skid proof feature have been added on.

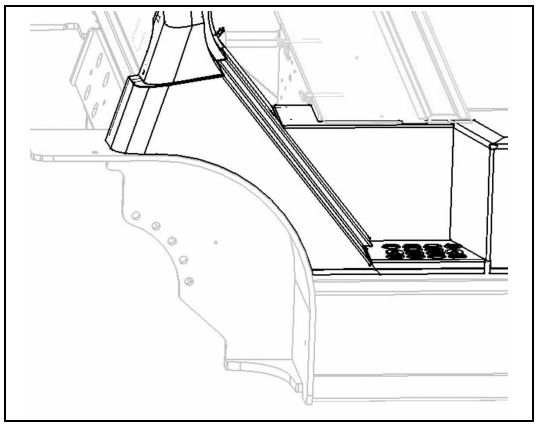

https://truckmanualshub.com/

■ Toe Board

The toe board is separated into two parts, front and rear.
Battery maintenance can be easily performed. The rear toe board consists of two plates hinged at the middle between them so that the battery change or the battery maintenance will be facilitated.
The front toe board can be lifted without using the tool since it is not bolted to the place. The toe board is equipped with the stopper bar to support the rear toe board when opened.

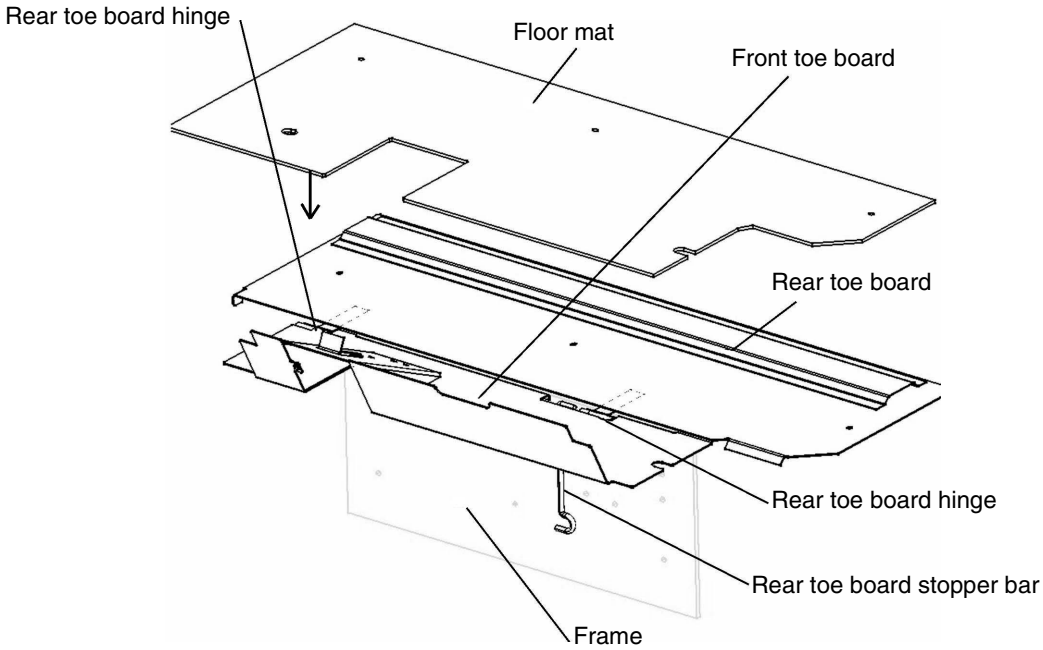

■ Rear toe board stopper

When opening the rear toe board, lock the rear toe board in the following procedure:
① Open the rear toe board fully. (Approx. 95°)
② Slide the stopper bar upward fully.
③ Turn the stopper bar left fully.

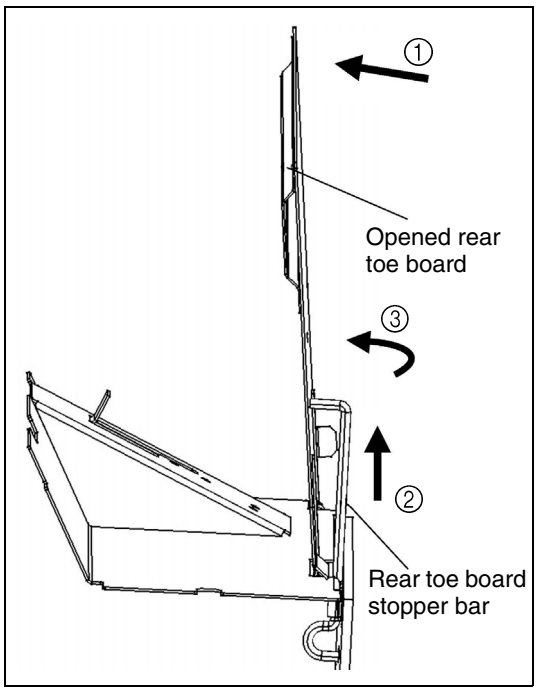

https://truckmanualshub.com/

ACCESSORIES

Lights

(1) List of lights and OPT settings OPT: Option

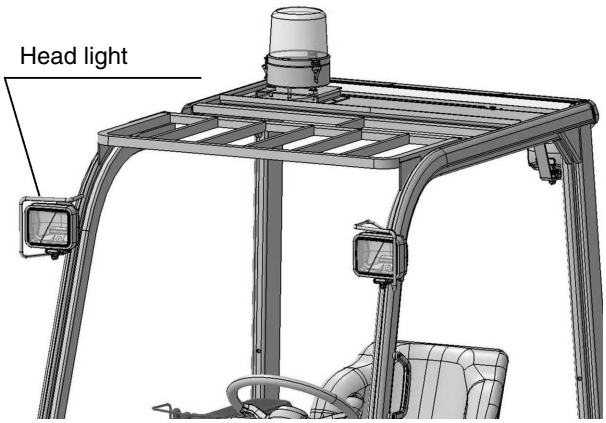

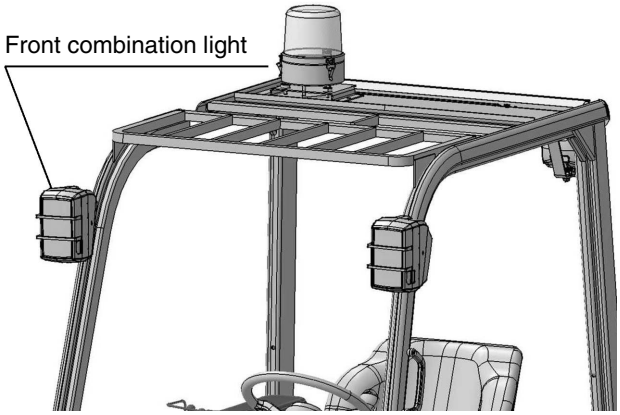

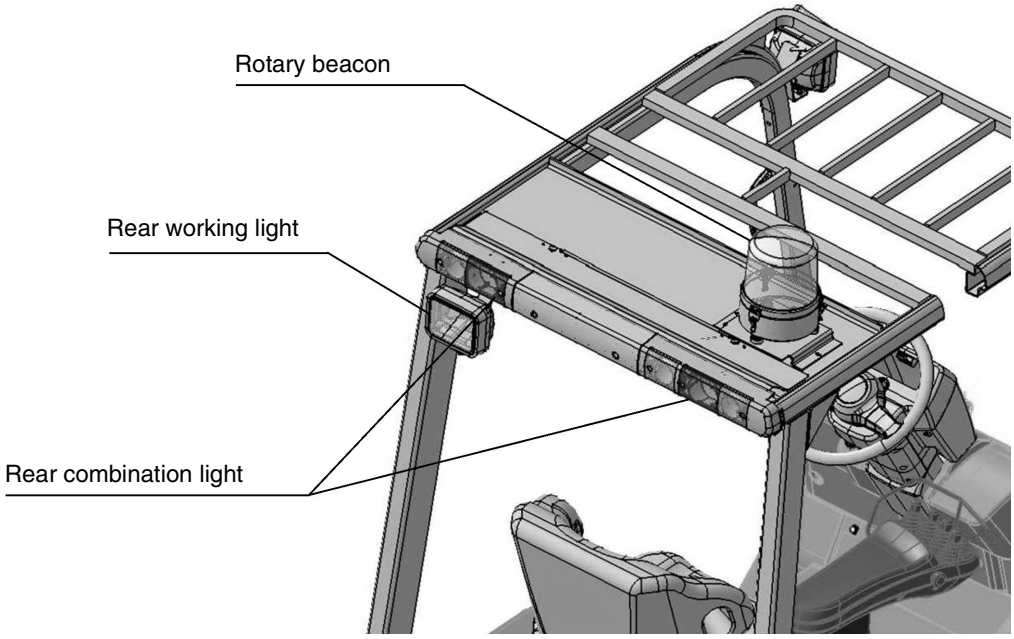

https://truckmanualshub.com/

Headlights	As with previous model, headlight is large diameter square type with guard.	OPT
Front combination lights	As 7FB25 model, the front combination light is integrated.	OPT
Front combination lights with Mast	If outside mast piping OPT and front combination lights in 7FBMF40 ~ 50 FSV or FV A450, the lights are installed with mast.	OPT (7FBMF40 ~ 50, FSV or FV, A450)
Rear combination lights	As 7FB25 model, the rear combination light is high-mount type which is installed crosswise to improve visibility, prevent damage and enhance appearance as 7FB25 model.	OPT
Rear working light	Rear working light is square type same as the headlight (same as in the previous models).	OPT
Rotary Beacon	Rotary beacon is same as the previous models.	OPT

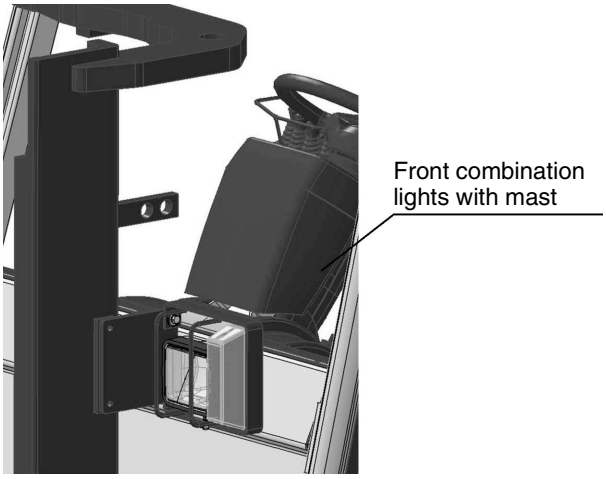

https://truckmanualshub.com/

(2) Light switch

The position of the light switch has been changed to the left of steering wheel, and it improves operation.
The switch is 3-step switching, and it is possible to switch the lights with one switch.

1st step : Clearance lights, Tail lights
2nd step : Head lights, Clearance lights, Tail lights
3rd step : Clearance lights, Tail lights, Rear working light

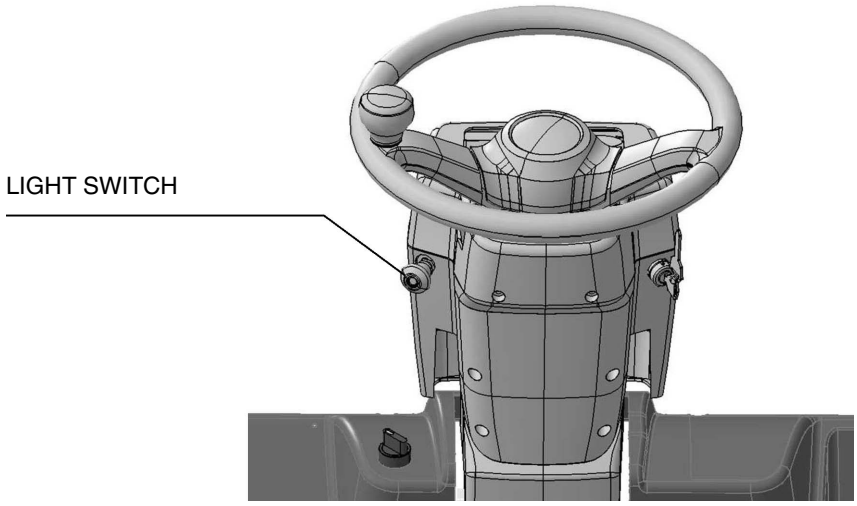

https://truckmanualshub.com/

MATERIAL HANDLING & HYDRAULICS SYSTEM

	Page
V MAST	10-2
FV MAST	10-4
FSV MAST	10-5
FORK, FORKBAR, AND LOAD BACKREST	10-6
MAST WEIGHT	10-8
MAST INTERCHANGEABILITY	10-9
HYDRAULIC CIRCUIT	10-10
LOAD HANDLING LEVER (MINI-LEVER)	10-12
OIL CONTROL VALVE	10-16
PUMP MOTOR	10-27
STEERING MOTOR	10-28
OIL PUMP	10-29
LIFTING SPEED	10-30
TILT CYLINDER	10-31
OIL TANK	10-32
OTHER HYDRAULIC PARTS	10-34
A4 PIPING	10-35

https://truckmanualshub.com/

V MAST

The V mast is standard equipment.
The basic structure of the V mast of 7FBMF16 to 30 is the same as that of the previous model. The basic mast structure of 7FBMF35 is the same as 7FGJF35. The basic mast structures of 7FBMF40, 45 and 7FBMF50 are the same as 7FD35 and 7FD45 respectively. See below about the improvement from the previous model.

1) Mast durability improvement
The structure around the tilt bracket of 7FBMF30, 35 is the same as that of 7FGF30 and 7FGJF35 so that the mast has an improved durability.

Previous model (3.0 ton)

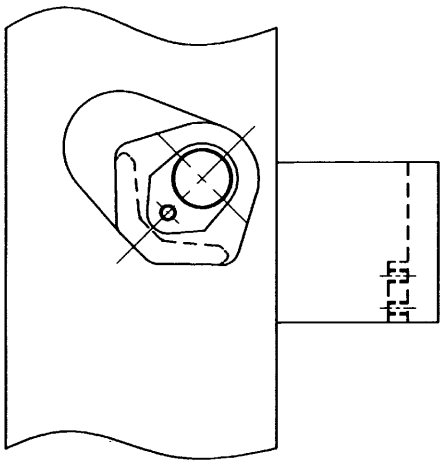

New model (3.0 ton, 3.5 ton)

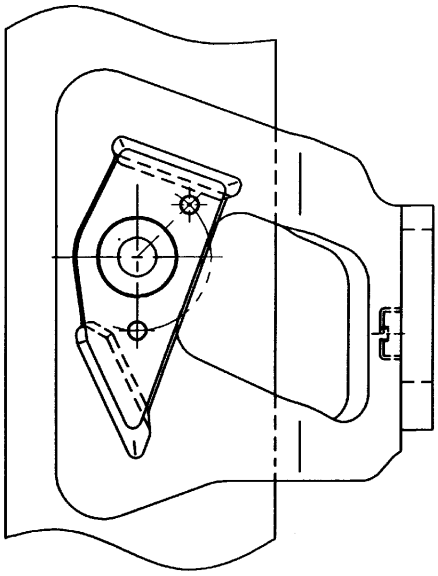

2) Front view
As the previous model, an optimum front visibility is obtained by adopting proper mast rails and finger bars. For the models of 4.0 ton, 4.5 ton and 5.0 ton, we adopt the same mast rail and finger bar as those of 7FD35 series and obtain an optimum front visibility.

3) Chain
The chain size of 7FBMF16 to 30 is the same as that of the previous model. For 7FBMF35, we adopt the same size as 7FGJF35 (BL834). For 7FBMF40 to 50, we adopt the same size as 7FD35 series (7FBMF40, 45: BL834, 7FBMF50: BL1034).

4) Lift cylinder
The basic structure of the lift cylinder of 7FBMF16 to 30 is the same as that of the previous model. The lift cylinder of 7FBMF35 is the same as 7FGJF35. The lift cylinder of 7FBMF40 to 50 is the same as 7FD35 series.
Only the cylinder of 7FBMF35 has the shock less landing mechanism.

https://truckmanualshub.com/

5) Lift cylinder piping
The basic structure of the lift cylinder piping of 7FBMF16 to 30 is the same as that of the previous model. The safety down valve is an inline type similar to that of the previous model, but the additional fitting for the pressure sensor is connected.
The lift cylinder piping of 7FBMF35 is the same as that of 7FGJF35. The lift cylinder piping of 7FBMF40 to 50 is the same as that of 7FD35 series.

6) Lift roller
The lift roller of 7FBMF16 to 30 is the same as that of the previous model. The roller of 7FBMF35 is the same as 7FGJF35. The roller of 7FBMF40 to 50 is the same as 7FD35 series.

7) Lost load center (Distance between the center of front axle and the front face of fork)
See below table.

(mm)

	1.6, 1.8 ton	2.0, 2.5 ton	3.0 ton	3.5 ton	4.0, 4.5 ton	5.0 ton
New model	410	430	460	495	520	580
Previous model	405	420	485	—	—	—

https://truckmanualshub.com/

FV MAST

Full-free mast (FV mast)

The FV mast is available as an option except for 7FBMF35 and 7FBMF50.
The basic structure of the FV mast of 7FBMF16 to 30 is the same as that of the previous model. The mast of 7FBMF40 and 45 is the same as 7FD35.
See below about the improvement from the previous model.

1) Mast durability improved
It is the same as that of V mast.

2) Front view
It is the same as that of V mast.

3) Chain
It is the same as that of V mast.

4) Lift cylinder
The basic structure of the lift cylinder of 7FBMF16 to 30 is the same as that of the previous model. The lift cylinder of 7FBMF40 and 45 is the same as 7FD35.

5) Lift cylinder piping
The basic structure of the lift cylinder piping of 7FBMF16 to 30 is the same as that of the previous model. The safety down valve is an inline type similar to that of the previous model, but the additional fitting for the pressure sensor is connected.
The lift cylinder piping of 7FBMF40 and 45 is the same as 7FD35.

6) Lift roller
It is the same as that of V mast.

7) Lost load center (Distance between the center of front axle and the front face of fork)
It is the same as that of V mast.

https://truckmanualshub.com/

FSV MAST

Full-free three-stage mast (FSV mast)

The FSV mast is available as an option.
The basic structure of the FSV mast of 7FBMF16 to 30 is the same as that of the previous model. The basic mast structure of 7FBMF35 is the same as 7FGJF35. The basic mast structures of 7FBMF40, 45 and 7FBMF50 are the same as 7FD35 and 7FD45 respectively.
See below about the improvement from the previous model.

1) Mast durability improvement
It is the same as that of V mast.

2) Front view
As the previous model, an optimum front visibility is obtained by adopting proper mast rails and finger bars. For over 4.0 ton truck, we adopt the same mast rail and finger bar as those of 7FD35 series and obtain an optimum front visibility.

3) Chain
It is the same as that of V mast.

4) Lift cylinder
The basic structure of the lift cylinder of 7FBMF16 to 30 is the same as that of the previous model. The lift cylinder of 7FBMF35 is the same as 7FGJF35. The lift cylinder of 7FBMF40 to 50 is the same as that of 7FD35 series.

5) Lift cylinder piping
The basic structure of the lift cylinder piping of 7FBMF16 to 30 is the same as that of the previous model. An additional fitting for the pressure sensor is connected to the flow regulator housing.
The lift cylinder piping of 7FBMF35 is the same as that of 7FGJF35. The lift cylinder piping of 7FBMF40 to 50 is the same as that of 7FD35 series.

6) Lift roller
It is the same as that of V mast.

7) Lost load center (Distance between the center of front axle and the front face of fork)
See below table.

(mm)

	1.6, 1.8 ton	2.0, 2.5 ton	3.0 ton	3.5 ton	4.0, 4.5 ton	5.0 ton
New model	430	460	480	505	550	610
Previous model	430	450	495	—	—	—

https://truckmanualshub.com/

FORK, FORKBAR, AND LOAD BACKREST

Fork

The fork of 7FBMF16 to 30 is the same as that of the previous model. The fork of 7FBMF35 is the same as that of 7FGJF35. The fork of 7FBMF40 to 50 is a newly adopted one. Refer to the table of “6.2. Fork” about its size. The standard fork color is black. The orange-colored fork is also prepared as an option.
As the previous model, the option “without fork set” is available for all the mast too.

(◎: STD, ○: Available)

Model	Width of fork (mm)	Thickness of fork (mm)	Length of fork (mm)					
			800	1000	1100	1200	1400	1500
7FBMF16, 18	80	40	◎	○	○	○	○	—
7FBMF20, 25	100	40	—	◎	○	○	○	—
7FBMF30	100	45	—	◎	○	○	○	○
7FBMF35	125	45	—	◎	○	○	○	○
7FBMF40, 45	150	50	—	◎	○	○	○	○
7FBMF50	150	60	—	◎	○	○	○	○

Forkbar & load backrest

Load backrest

The load backrest is the standard equipment of the mast.
The backrest of 7FBMF16 to 30 is the same as that of the previous model. The backrest of 7FBMF35 is the same as that of 7FGJF35. The backrest of 7FBMF40 to 50 is a newly adopted one, but its structure is the same as that of 7FBMF16 to 35: Flat steal type.
The option “W/O load backrest” is available for all the mast of 7FBMF series.

7FBMF16 ~ 35 (V, FV, FSV)

(◎: STD, ○: Available)

			Length of forkbar (mm) Outside width of load backrest [+60 mm]				
		Model	920	1020	1070	1170	1470
Height of load backrest (mm)	1220	7FBMF16, 18	◎	—	—	—	—
		7FBMF20, 25	—	◎	—	○	○
		7FBMF30, 35	—	—	◎	○	○

https://truckmanualshub.com/

7FBMF40 ~ 50 (V,FV,FSV)

			Length of forkbar (mm) Outside width of load backrest [+60 mm]			
		Model	1170	1320	1470	1630
Height of load backrest (mm)	1220	7FBMF40, 45	◎	○	○	○
		7FBMF50	◎	○	○	○

https://truckmanualshub.com/

MAST WEIGHT

Mast Type	Maximum fork height	7FBMF16, 18	7FBMF20, 25	7FBMF30	7FBMF35	7FBMF40, 45	7FBMF50
	mm	kg	kg	kg	kg	kg	kg
V	3000	410	465	570	680	890	1060
	3300	440	500	610	715	930	1100
	3500	460	520	630	730	950	1110
	3700	470	530	650	750	970	1170
	4000	490	565	680	830	1050	1270
	4500	540	615	760	900	1100	1350
	5000	570	655	800	940	1150	1430
FV	3000	450	505	610	NA	930	NA
	3300	480	540	660	NA	960	NA
	3500	500	560	680	NA	980	NA
	3700	510	570	700	NA	1000	NA
	4000	530	605	740	NA	1100	NA
FSV	3700	560	650	795	890	1070	1350
	4000	580	670	815	920	1100	1380
	4300	610	690	855	955	1130	1420
	4700	650	720	895	985	1190	1480
	5000	680	740	935	1070	1220	1520
	5500	700	790	1015	1125	1270	1610
	6000	770	840	1075	1200	1370	1690

Note:
1) The value is without the weight of load backrest and forks.
2) The value in this list is rounded off to the nearest one.

https://truckmanualshub.com/

MAST INTERCHANGEABILITY

1: Interchangeability in the new model

Model group	Mast		
	V	FSV	FV
7FBMF16, 18	○	△	○
7FBMF20, 25	○	△	○
7FBMF30	○	△	○
7FBMF35	○	△	—
7FBMF40, 45	○	△	○
7FBMF50	○	△	—

○: Interchangeable with the other masts in each model groups.
△: Interchangeable, but the tilt cylinder has to be exchanged at the same time.

2: Interchangeability with the previous model
There is no interchangeability of the mast between the previous model and the new model.

3: Interchangeability with 7FGF25 series
Only the mast of 7FBMF16, 18 can be interchangeable with those of 7FGF15 and 18. Note that the pressure sensor and the sensor harness is different between the 7FBMF16, 18 and 7FGF15, 18 and these parts have to be exchanged when swapping the mast.

https://truckmanualshub.com/

HYDRAULIC CIRCUIT

A general hydraulic circuit is shown below.

1.6 ton ~ 3.5 ton

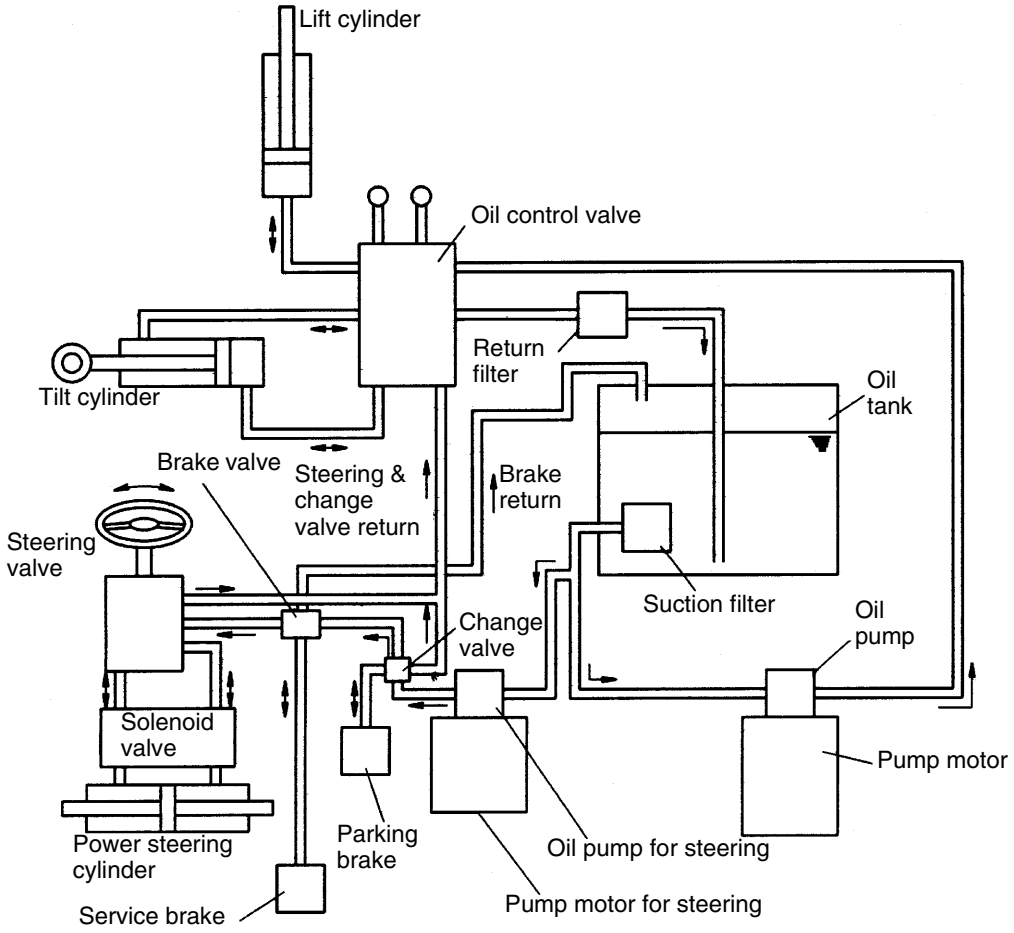

Just as on the old models, both suction and return filters are provided as standard equipment to protect the hydraulic equipment.
The return filter is installed under the front toe-board.

https://truckmanualshub.com/

4.0 ton ~ 5.0 ton

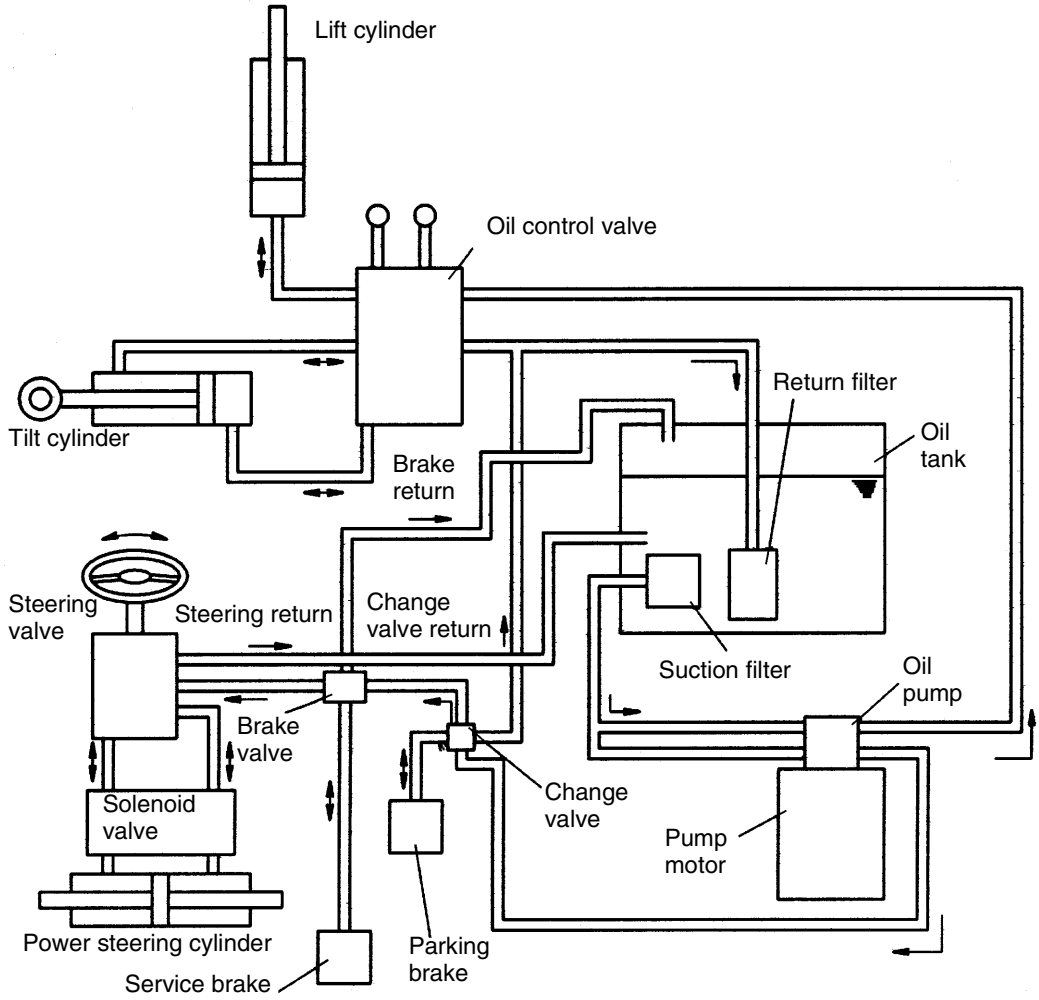

Both suction and return filters are provided as standard equipment to protect the hydraulic equipment.

https://truckmanualshub.com/

LOAD HANDLING LEVER (MINI-LEVER)

1) The structure of mini-lever
Mini lever is available as standard to meet the demand of European market.

The operation stroke has been made smaller and operating force has been decreased by changing the position of the lever from over cowl to right front of the seat. Operability is improved and operator's fatigue with the lever operation is reduced.

It is easy to replace the vehicle from previous model with new model because the lever is independent forward-back single axis lever that is the same as manual lever cowl position of previous model.

Fork automatic leveling control switch is located on back of tilt lever. Once the button is pushed, the movement condition of the button is held by the locking mechanism of inside switch, and the fork automatic leveling function is effective. When the button is pushed again, the lock is released and the fork automatic leveling control function is canceled. (Refer to page 11-10 Active mast function controller for detail function.)

Lever position is adjustable in forward-back direction. Loosen the knob that fix lever box, and set the lever box at the position that operator prefer, and tighten the knob to fix the lever box.

Guard is installed around the lever.

Load handling operation is prohibited when operator leaves the seat.

https://truckmanualshub.com/

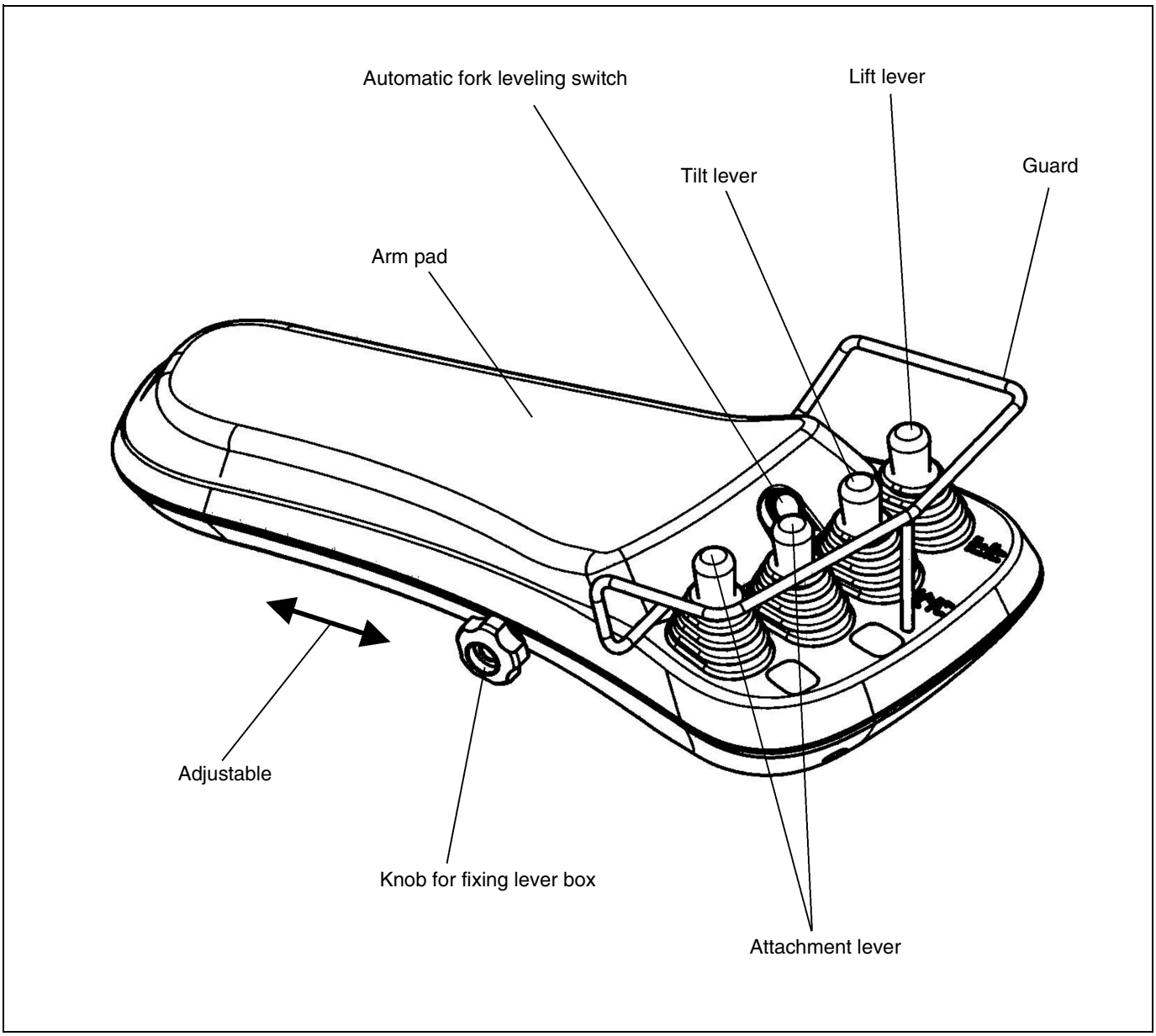

https://truckmanualshub.com/

2) The structure of armrest

Armrest is installed to lessen the operator's fatigue of right arm when driving the vehicle and operating hydraulic lever.

The material of the arm pad is polyurethane. It is soft and fits the arm and the palm.

Armrest is fixed on battery hood, and it does not move with seat slide. Therefore, by moving the seat backward for large operator whose legs and arms are long and by moving the seat forward for small operator whose legs and arms are short, all operators can take best position to operate load handling lever.

The height of the armrest is adjustable. Loosen the knob that fix armrest, and set the armrest at the position that operator prefer, and tighten the knob to fix armrest.

The mini lever box of model 7FBMF40, 45 and 50 can be tilted up to avoid the interference between the overhead guard and the mini lever box when opening the battery hood.

(Refer to page 8-5 seat stand opening & closing)

https://truckmanualshub.com/

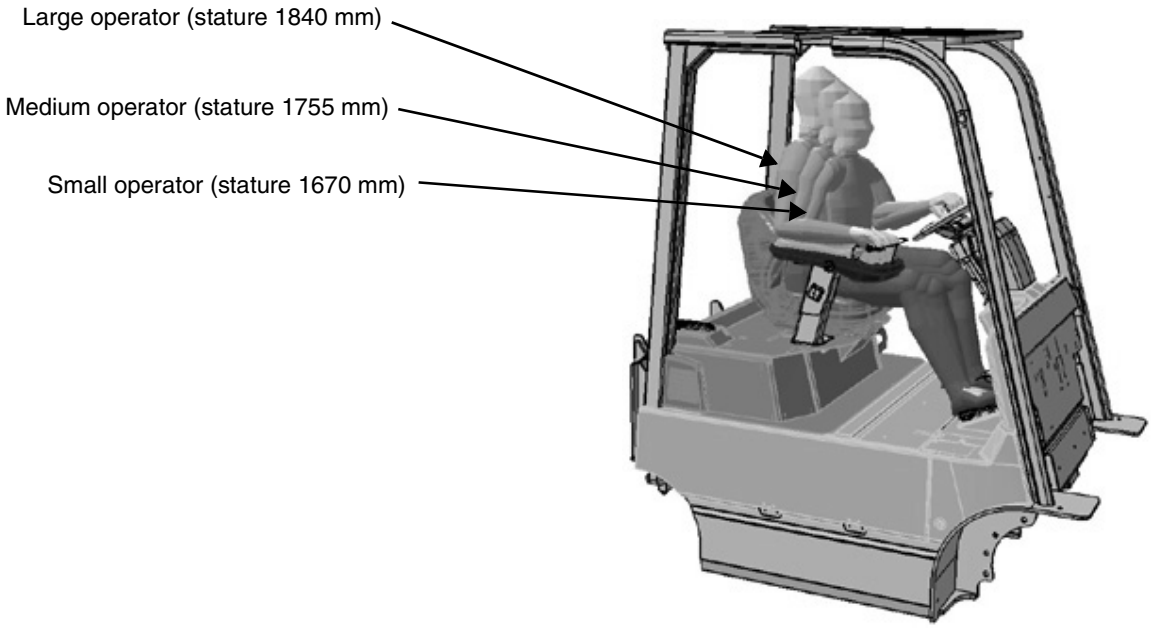

Every operator can choose the most suitable position to operate the lever.

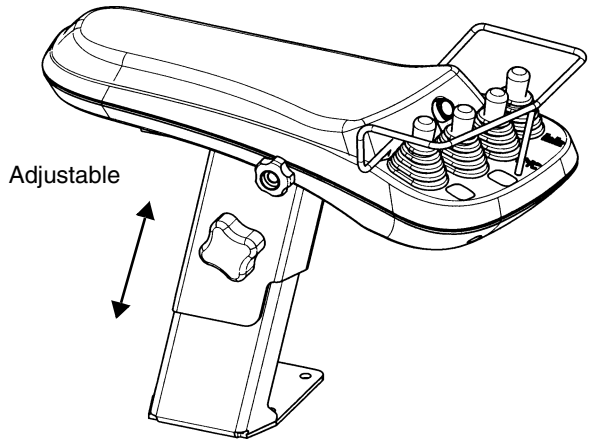

Knob for fixing the armrest

7FBMF 16, 18, 20, 25, 30, 35

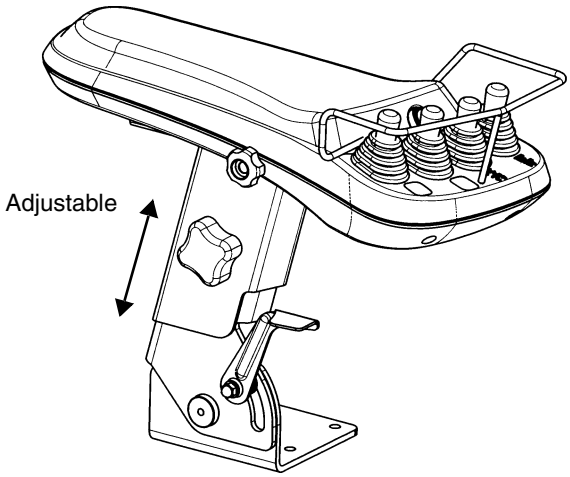

Lever for locking and releasing mini-lever box

7FBMF 40, 45, 50

https://truckmanualshub.com/

OIL CONTROL VALVE

General

The electric proportional oil control valve for mast control has been adopted.
The following point has been adopted.

- The tilt circuit is equipped with a logic valve and the electric proportional valve for control of the mast tilt operation.
- The lift circuit contains a logic valve and electric proportional valve, and a key-off lift lock function has been added so that the forks do not descend even if the lift lever is accidentally pushed to the down side.
- The natural drop amount and natural forward tilt amount have been greatly reduced by the solenoid valves in the lift circuit and the tilt circuit.

Appearance

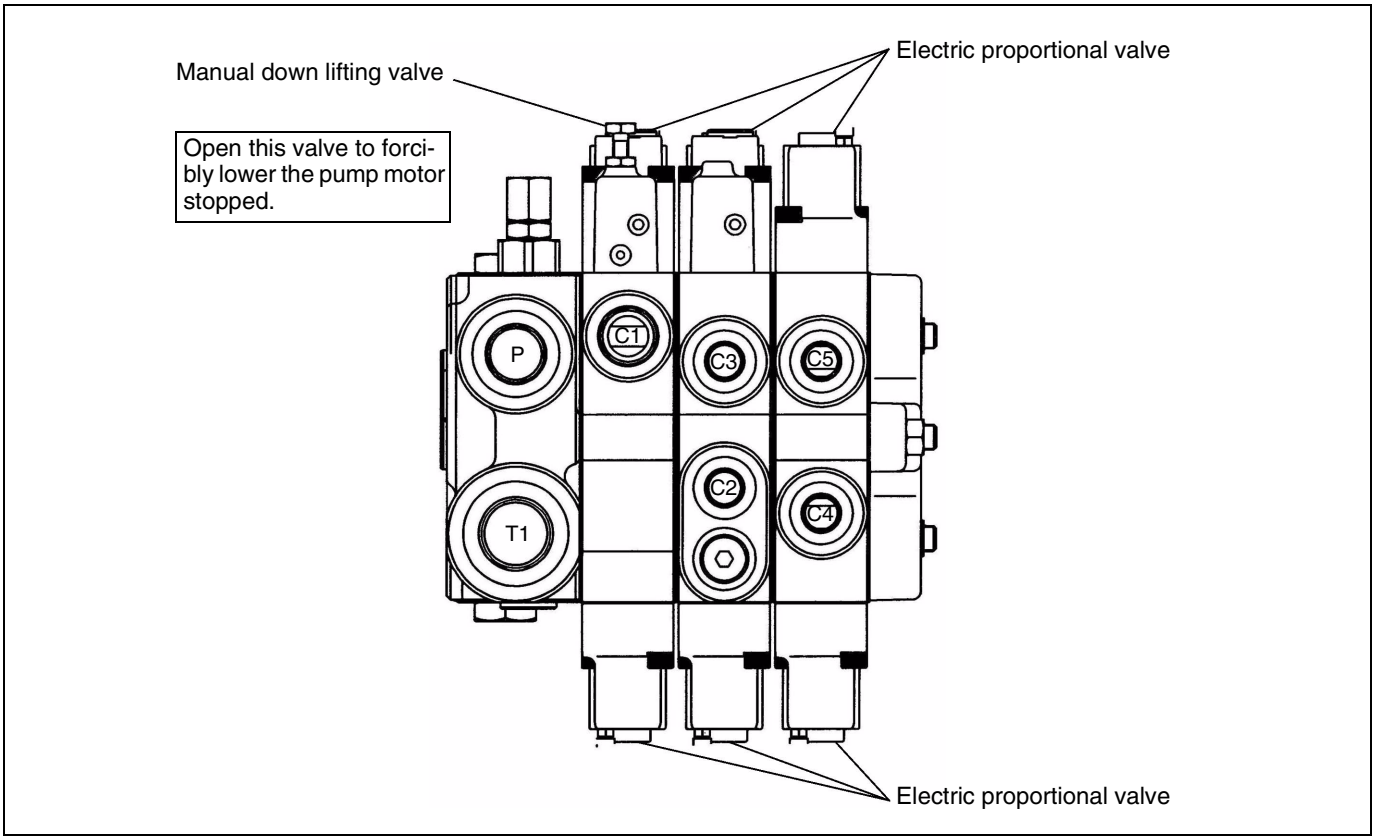

Note: With the lift lock check valve for lift circuit lock used this time, locking is released only when the key is turned ON, and the lift lever is pushed to the lowering side. And with the tilt lock check valve for tilt circuit lock, locking is released and operation is possible only when the key is turned ON and the tilt lever is pushed to the forward tilt side. (There is lock release sound at the time of an operation start.)

https://truckmanualshub.com/

Specifications

Unit: MPa (kgf/cm^2)[psi]

	7FBMF16 ~ 18	7FBMF20 ~ 35 7FFBMF40 ~ 50
Relief pressure	16.2 (165) (2350)	18.1 (185) (2630)

Material handling valve

1.6 ~ 3.5 ton models

- Pressure compensation mechanism
  Pressure oil flowing from port P flows from chamber (a) through orifice A to chamber (b), then flows through orifice B to chamber (c).
  The opening aperture of oil passage E is determined by the equilibrium of chamber (b), chamber (c) and spring 1.
  This controls the oil pressure of chamber (a) at a fixed pressure higher than the oil pressure in chamber (c).
  Pressure oil that has flowed through the pressure reducing valve flows to chamber (f), then flows through diaphragm D to chamber (e).
  The pressure oil in chamber (c) flows into chamber (d) and the pressure compensation valve is operated by the equilibrium of chamber (c), chamber (d) and spring 2.
  This controls the oil pressure of chamber (d) at a fixed pressure higher than the oil pressure in chamber (e).
  Chamber (d) and chamber (c) are connected by diaphragm C, so they have the same oil pressure, and the pressure differential between chamber (a) and chamber (f) is kept constant by operation of the unload valve and the pressure compensation valve.
  This pressure differential is detertimed by spring 1 and spring 2.
  When the oil pressure in chamber (a) becomes high, the oil drains from the pilot relief valve of the unload valve.
  Accordingly, the maximum oil pressure of chamber (a) is detertimed by the installation load of spring 3.

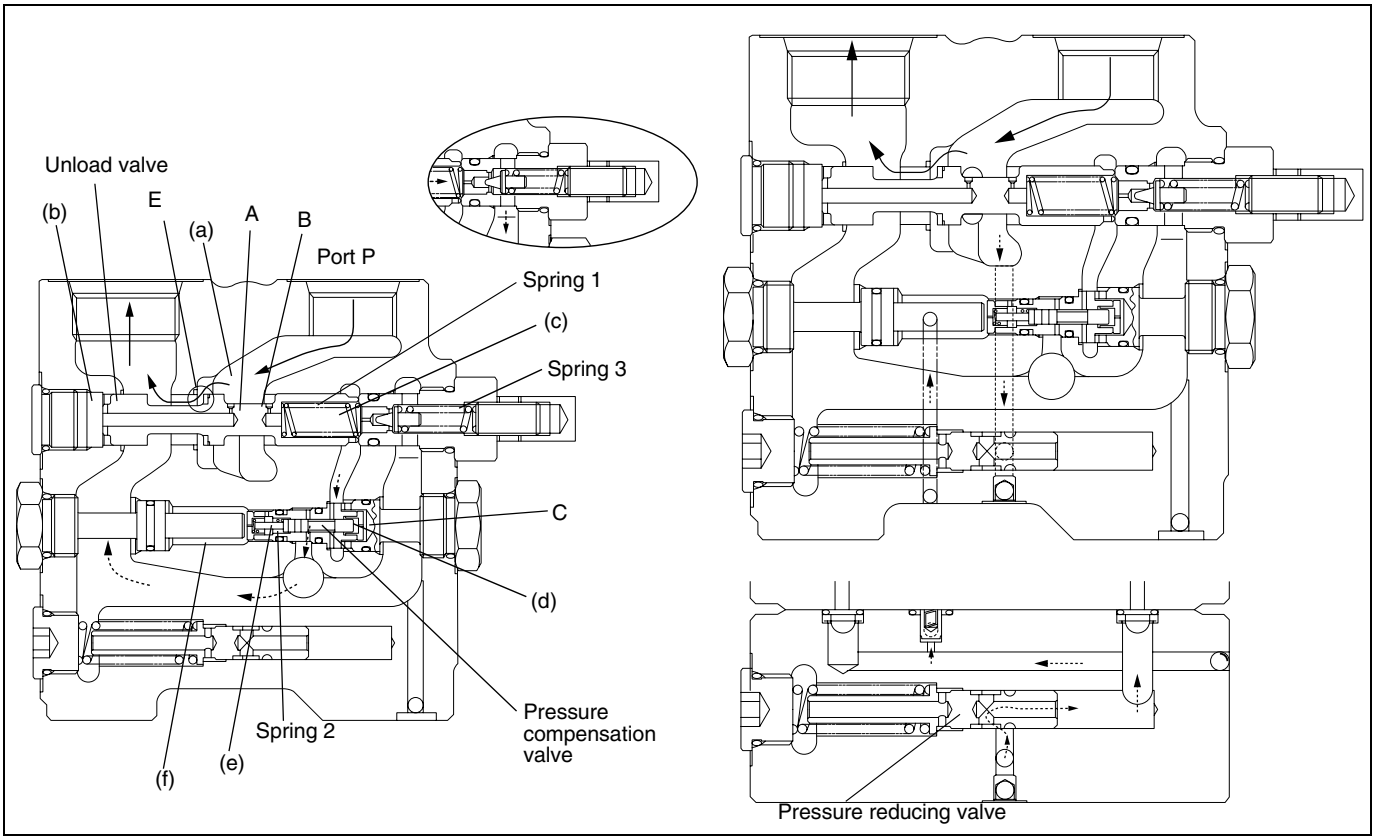

https://truckmanualshub.com/

- Backpressure leak reduction mechanism
  Port C1 of the lift cylinder is connected to the bottom of the lift cylinder, and port C3 of the tilt cylinder is connected to the rod side of the tilt cylinder.
  When load pressure from port C1 and port C3 is applied, leakage to chamber (i) and chamber (j) is controlled by H and I on the seat.
  Leakage of pressure oil that flowed to the lift lock check valve and pressure oil that flowed to the tilt lock check valve is controlled by land part J and land part K respectively.
  This reduces natural drop and natural forward tilt.

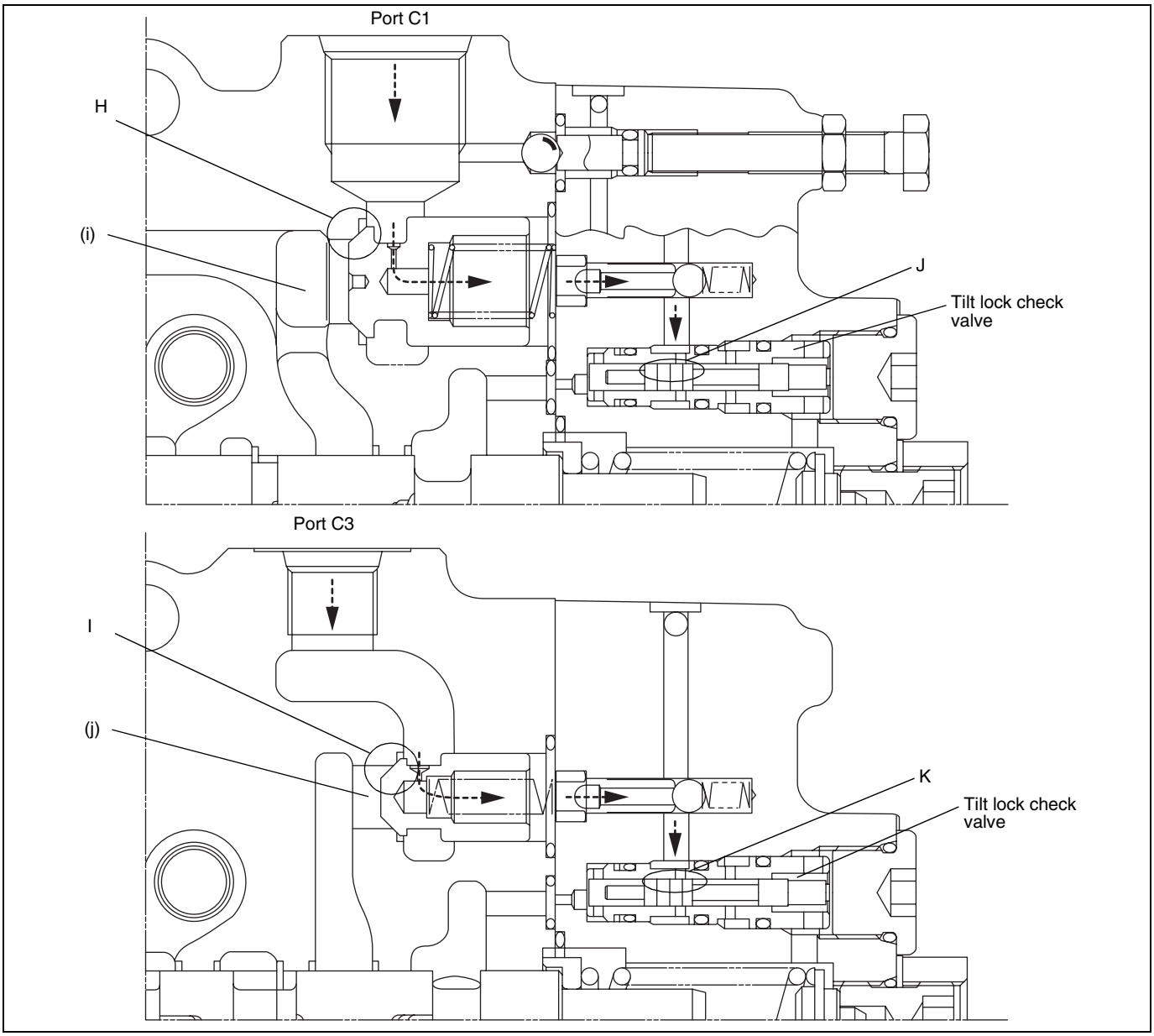

https://truckmanualshub.com/

- Hydraulic pressure mechanism for solenoid proportional valve
  The pressure oil that has had its pressure reduced by the pressure reducing valve flows to chamber (f), then flows through passage 4 and the filter to become the pilot pressure to each solenoid.
  The pressure of the oil is determined by the set load on spring 4.

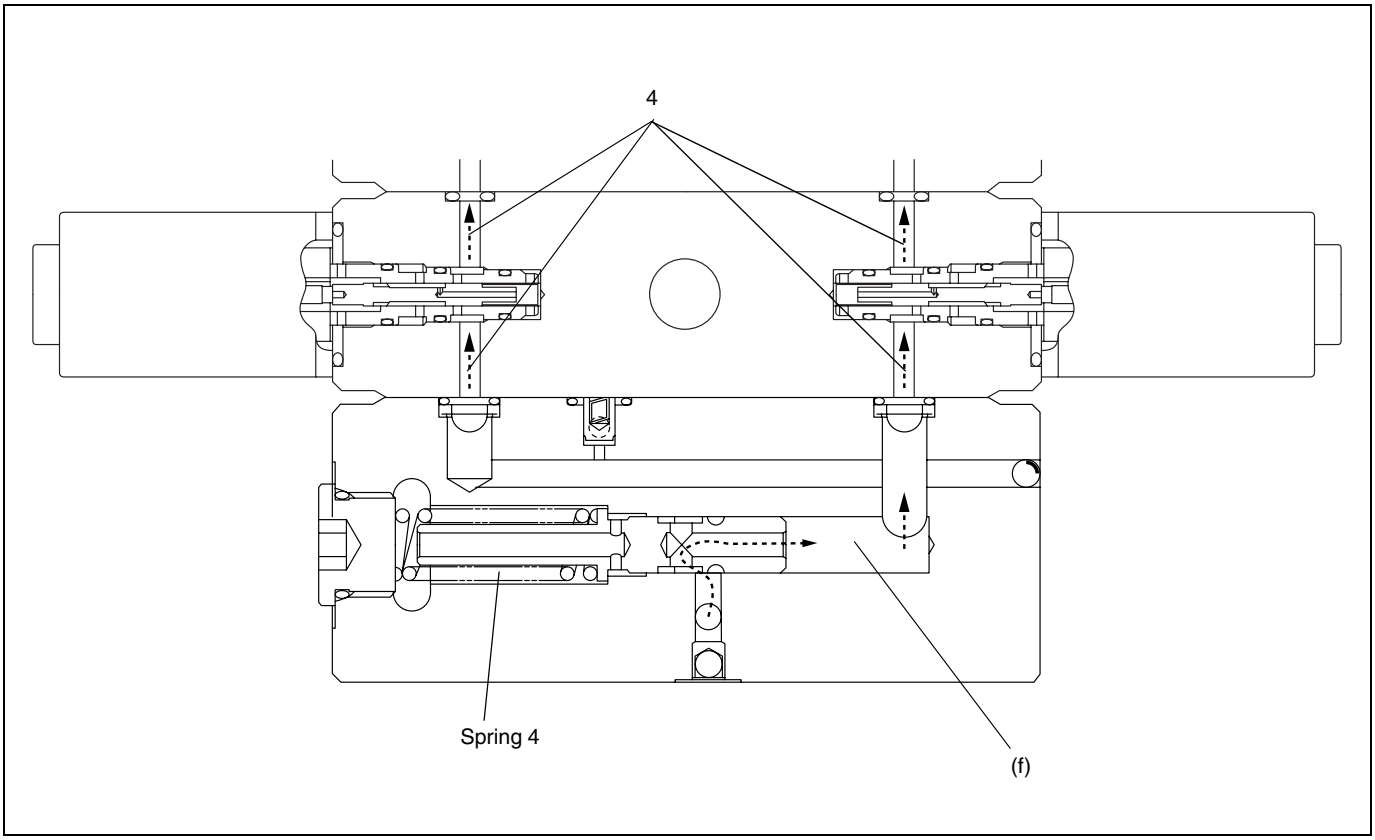

https://truckmanualshub.com/

- Load-sensing mechanism
  The pressure compensation valve, unload valve and sensing circuit are part of pressure compensation operation.
  When the spool strokes, chamber 7 connects to each cylinder port.
  Sensing pressure is the cylinder pressure, which gives feedback to the pressure compensation valve.
  When sensing pressure + pressure of spring (2) = pressure of chamber (d) and chamber (c), the pressure compensation valve moves to the equilibrium position.
  The pressure differential between the sensing pressure and chamber (d) and chamber (c) becomes the pressure of spring (2).
  The pressure of chamber (d) and chamber (c) is applied to the unload valve, then the unload valve moves to the equilibrium position, when pressure of chamber (e) and chamber (c) + pressure of spring (1) = P port pressure.
  The pressure differential between chamber (d) and chamber (c) and P port pressure becomes the pressure of spring (1).
  The force of spring (1) and spring (2) is now constant, so the pressure differential is constant, and sensing pressure + force of spring (1) +force of spring (2) = P port pressure.

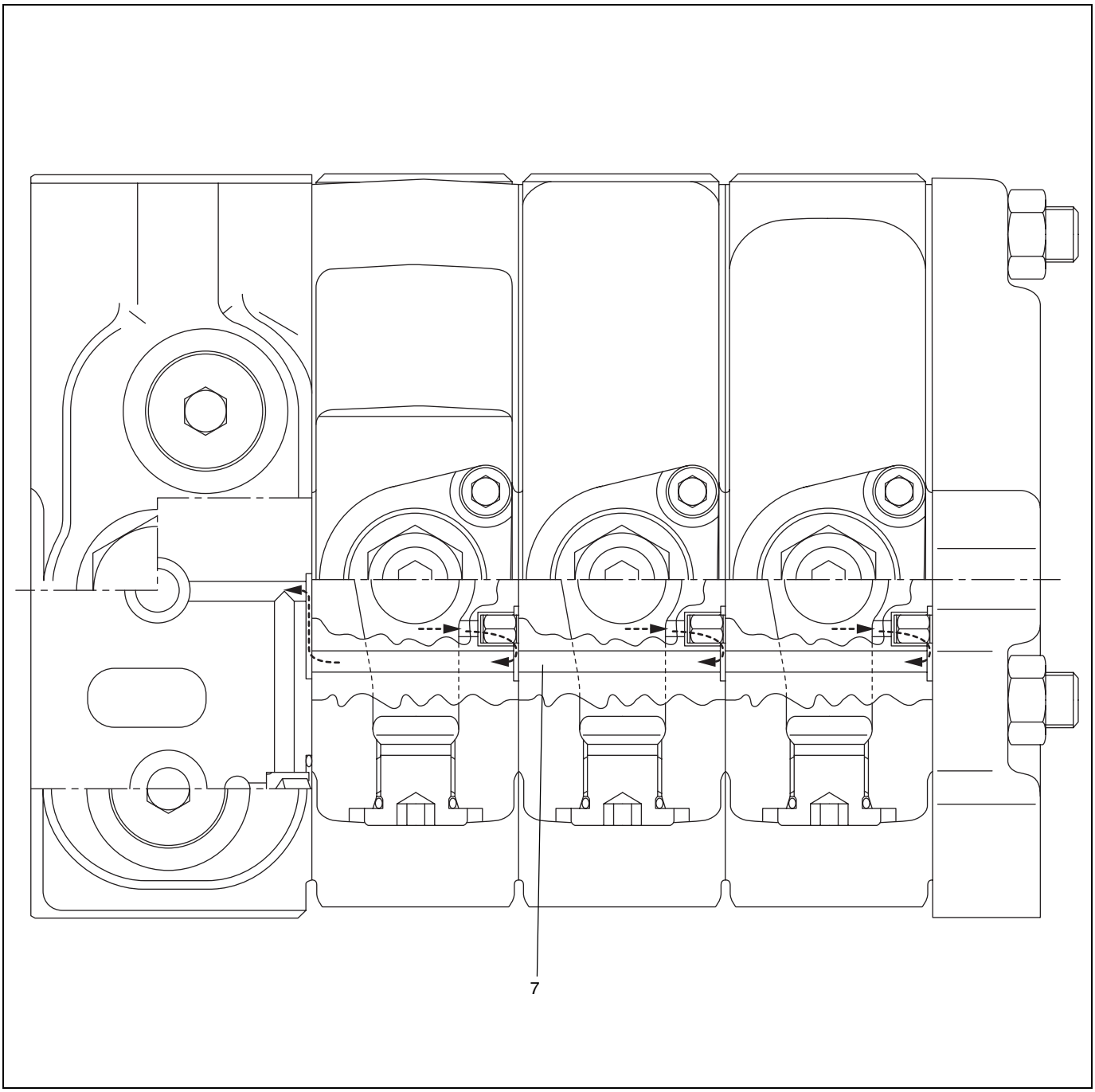

https://truckmanualshub.com/

- Lift UP operation
  When the lift lever is pushed to the UP side, solenoid b1 is energized and the solenoid proportional valve moves to the right. Then the pressure oil controlled by the pressure reducing valve flows to chamber (k) on the left side, and the lift spool moves to the right side.
  The volume of oil that flows to chamber (k) is proportional to the distance the lever is operated.
  Pressure oil flowing from chamber (a) in the inlet section pushes down the load check, then flows through part L and chamber 7 to move the lift lock check valve, and then flows to the port C1 and the bottom of the lift cylinder.
  The select valve does not operate at this time, so the select valve becomes simply a check valve.
  The pressure differential between chamber (a) and chamber 7 is kept constant by the pressure compensation mechanism and the load sensing mechanism, so the volume of pressure oil supplied to port C1 is determined by the opening aperture of part L irrespective of the load.

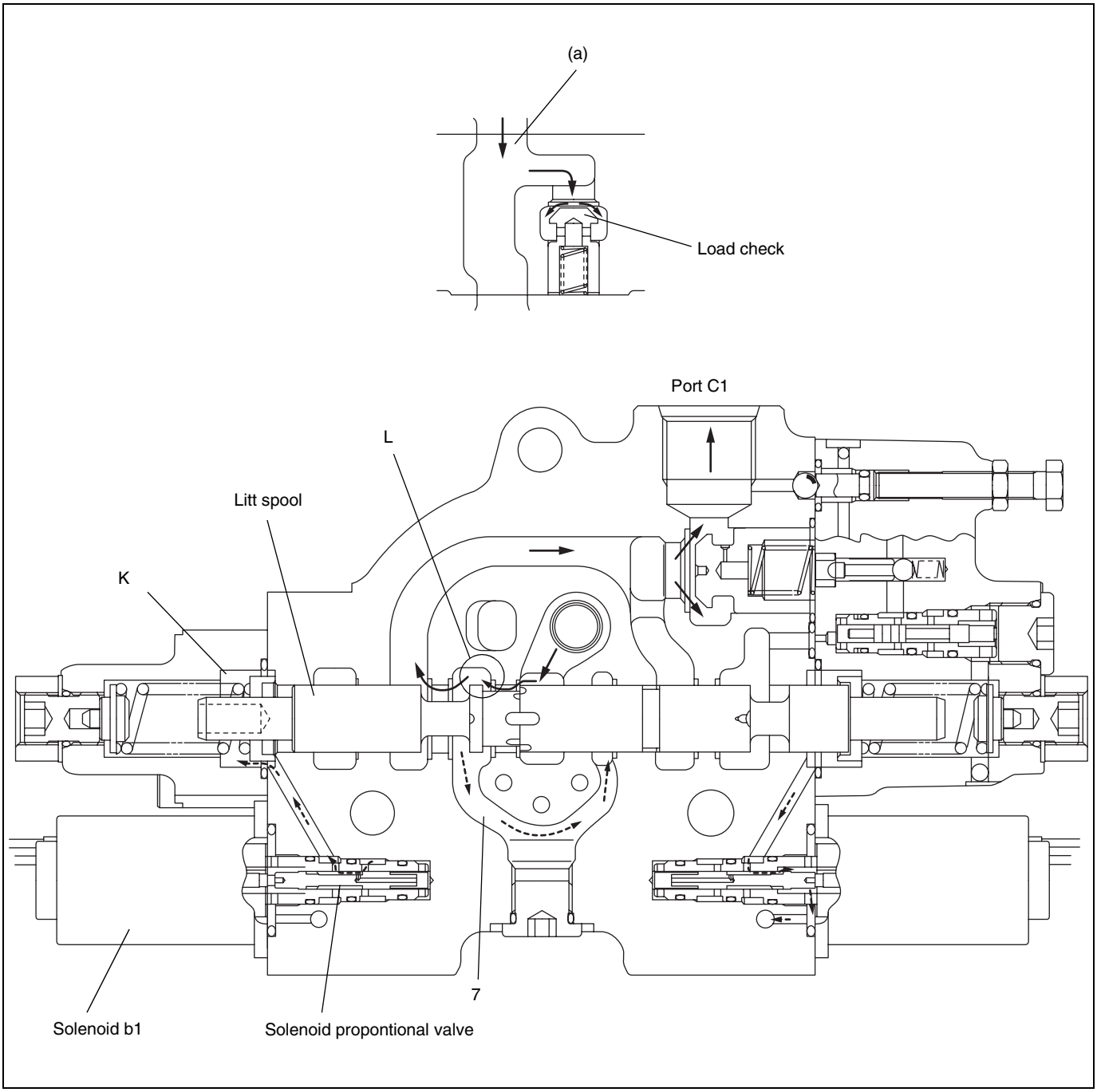

https://truckmanualshub.com/

- Lift DOWN operation
  When the lift lever is pushed to the DOWN side, solenoid a1 is energized and the solenoid proportional valve moves to the left. Then the pressure oil controlled by the pressure reducing valve flows to chamber (m) on the right side, and the lift spool moves to the left side.
  The volume of oil that flows to chamber (m) is proportional to the distance the lever is operated.
  The pressure oil from chamber (m) flows through 11 into chamber (n) and shifts the select valve to the left.
  Then the pressure oil operating on port C1 flows through diaphragm F and enters the select valve.
  The circuit is configured with the select valve and chamber (g) connected, so the pressure oil of the select valve flows through part M and then flows from chamber (h) to the tank.
  Accordingly, C1 holding pressure opens the lift lock check valve and the oil flows from C1 to the tank.

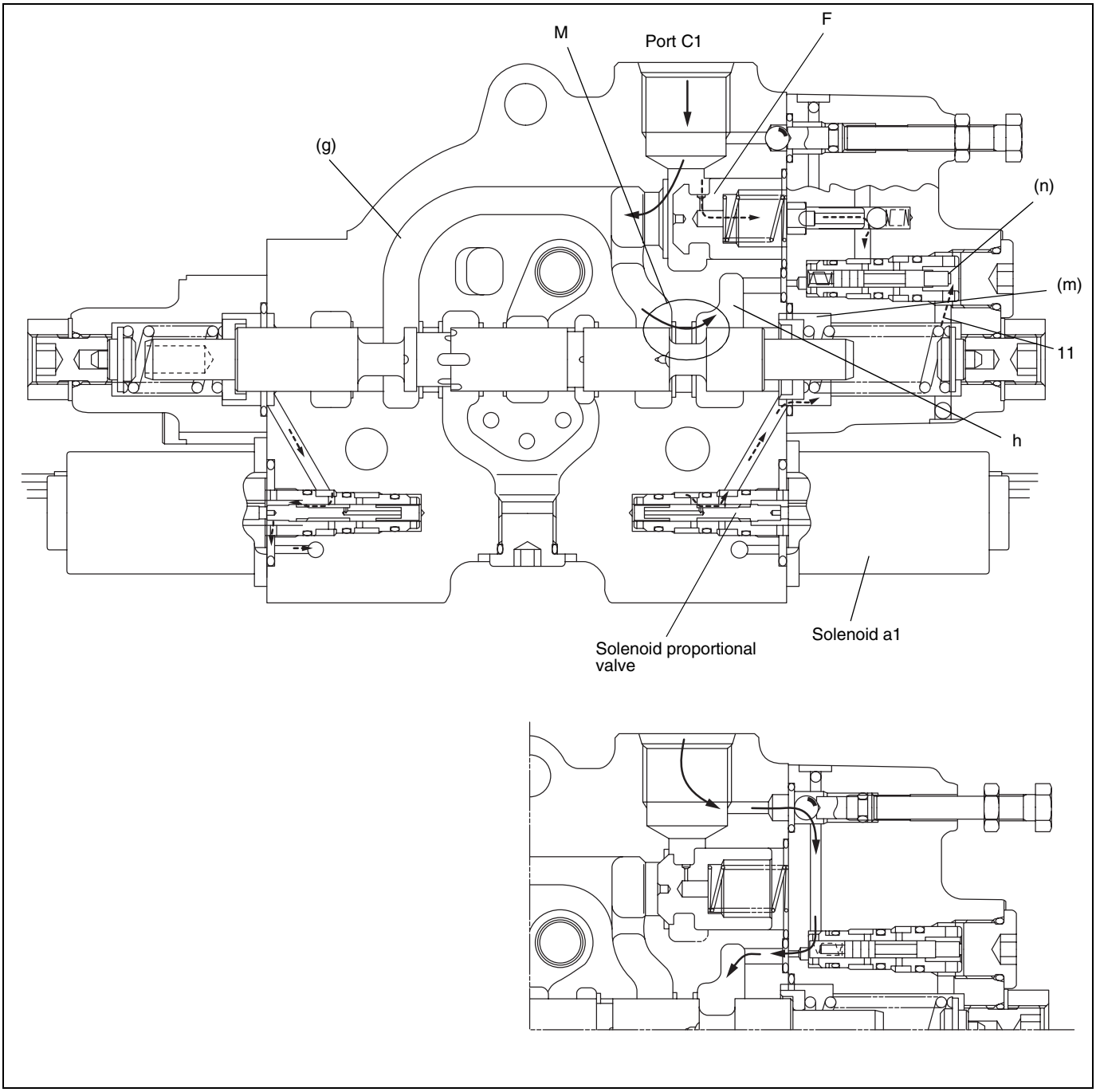

If, due to a malfunction, you want to lower the mast without moving the lift spool, opening the emergency DOWN valve will configure the circuit as shown in the diagram and the mast will descend.

https://truckmanualshub.com/

- FORWARD tilt operation
  When the tilt lever is pushed to the FORWARD side, solenoid a2 is energized and the solenoid proportional valve moves to the left. Then the pressure oil controlled by the pressure reducing valve flows to chamber (o) on the right side, and the tilt spool moves to the left side.
  The volume of oil that flows to chamber (o) is proportional to the distance the lever is operated.
  Pressure oil flowing from chamber (a) in the inlet section pushes down the load check, then flows from port C2 to the bottom of the tilt cylinder.
  Pressure oil flowing to chamber (o) enters chamber (p), and shifts the select valve to the left.
  The circuit is configured so that oil from the tilt cylinder rod side flows from port C3 through the tilt lock check valve and chamber (s) to chamber (t).
  This generates a pressure differential before and after diaphragm G, and the shifting of the tilt lock valve to the right causes the oil on the tilt cylinder rod side to return to the tank.

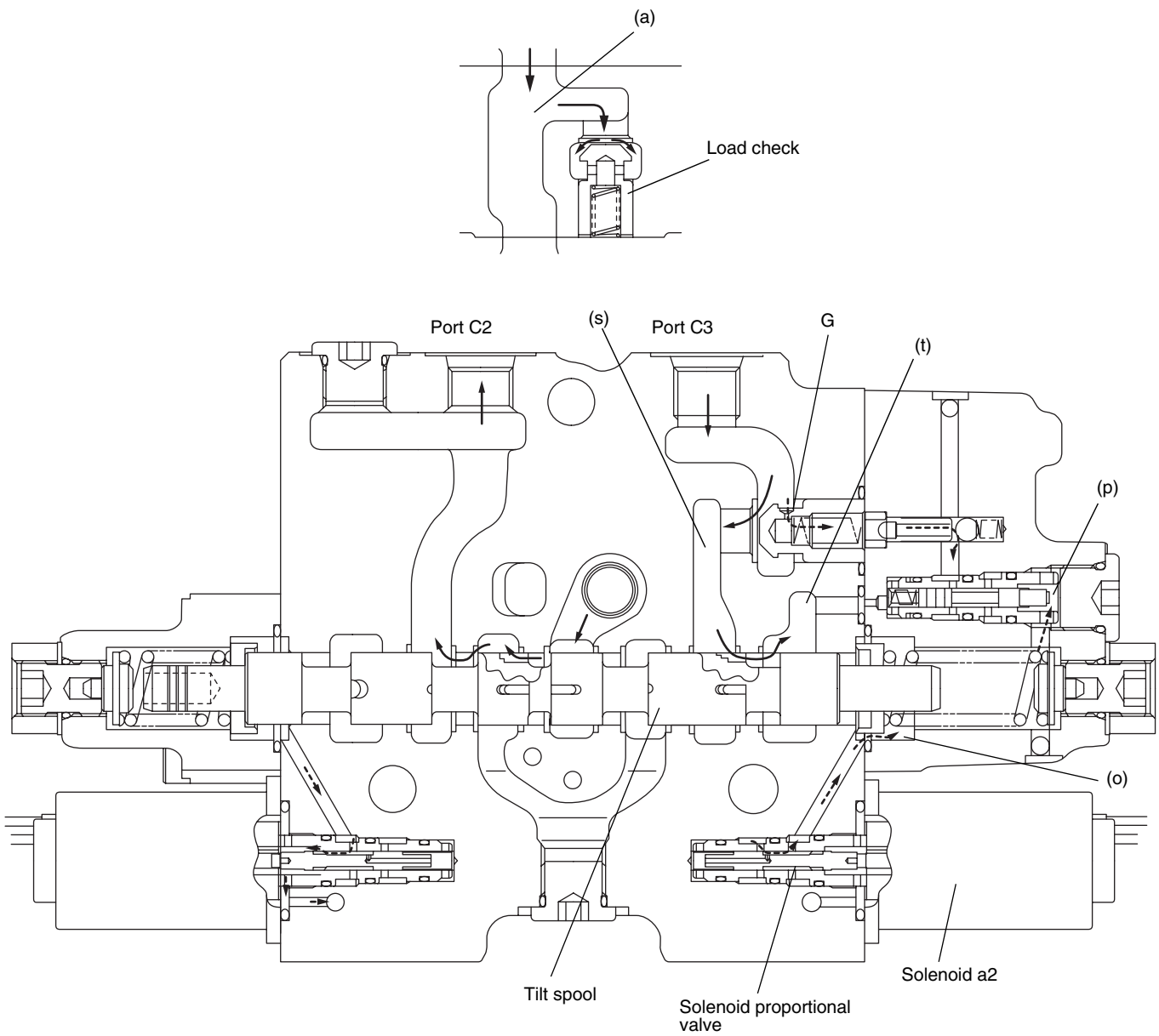

https://truckmanualshub.com/

- REAR tilt operation
  When the tilt lever is pushed to the REAR side, solenoid b2 is energized and the solenoid proportional valve moves to the right. Then the pressure oil controlled by the pressure reducing valve flows to chamber (u) on the left side, and the tilt spool moves to the right side.
  The volume of oil that flows to chamber (u) is proportional to the distance the lever is operated.
  Pressure oil flowing from chamber (a) in the inlet section pushes down the load check and shifts the tilt lock check valve, then flows from port C3 to the tilt cylinder rod side.
  The select valve does not operate at this time, so the select valve becomes simply a check valve.
  The pressure differential between chamber (a) and chamber 7 is kept constant by the pressure compensation mechanism and the load sensing mechanism, so the volume of pressure oil supplied to port C3 is determined by the opening aperture of part O irrespective of the load.

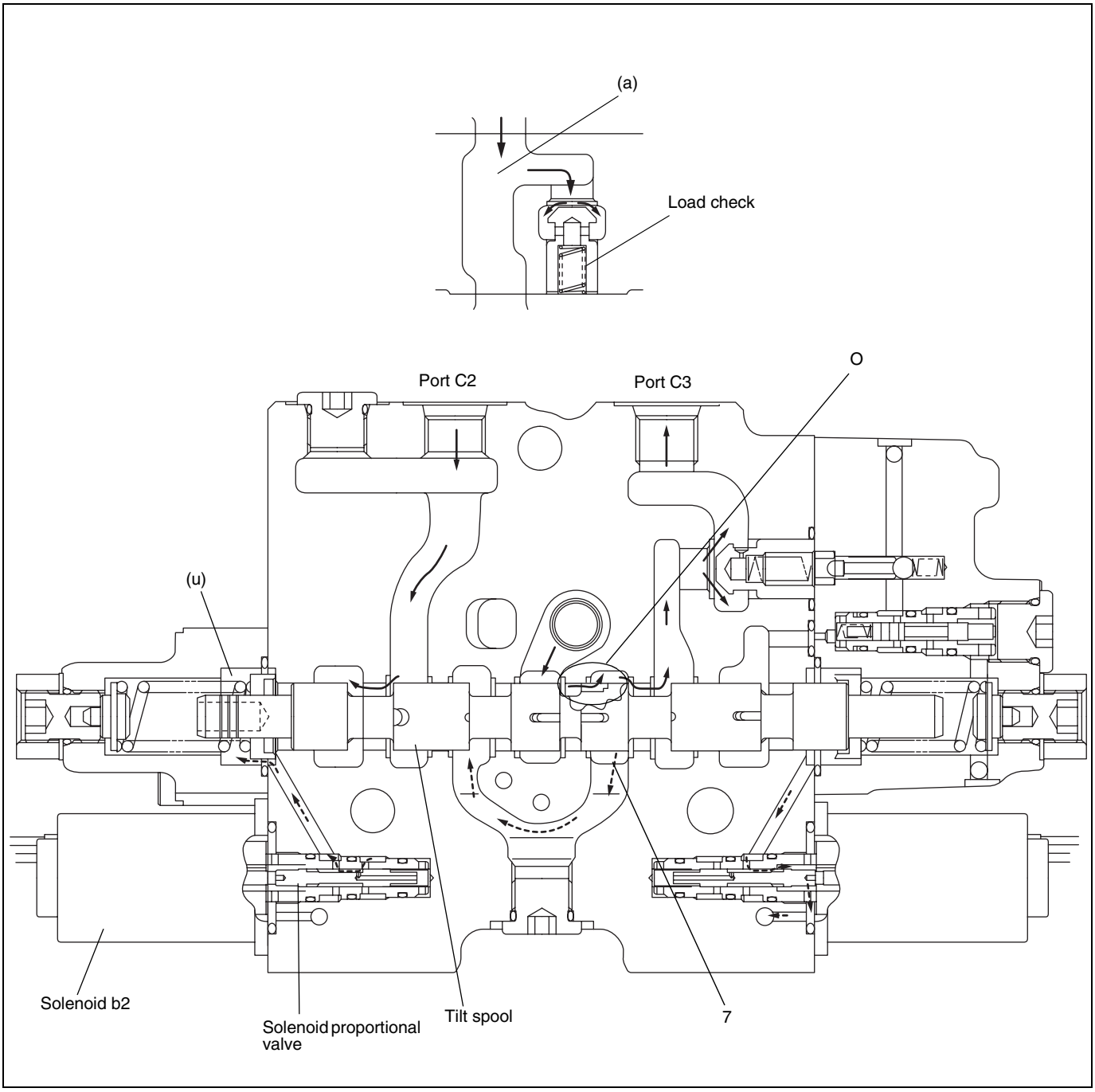

https://truckmanualshub.com/

- Attachment
  When you operate the attachment lever, solenoid b3 is energized and the solenoid proportional valve moves to the left. Then the pressure oil controlled by the pressure reduction valve flows to chamber (p) on the left side and the spool moves to the right side.
  Now the oil from chamber (q) drains out from 10 via the solenoid proportional valve.
  The flow of the pressure oil after this is the same as for tilt operation.

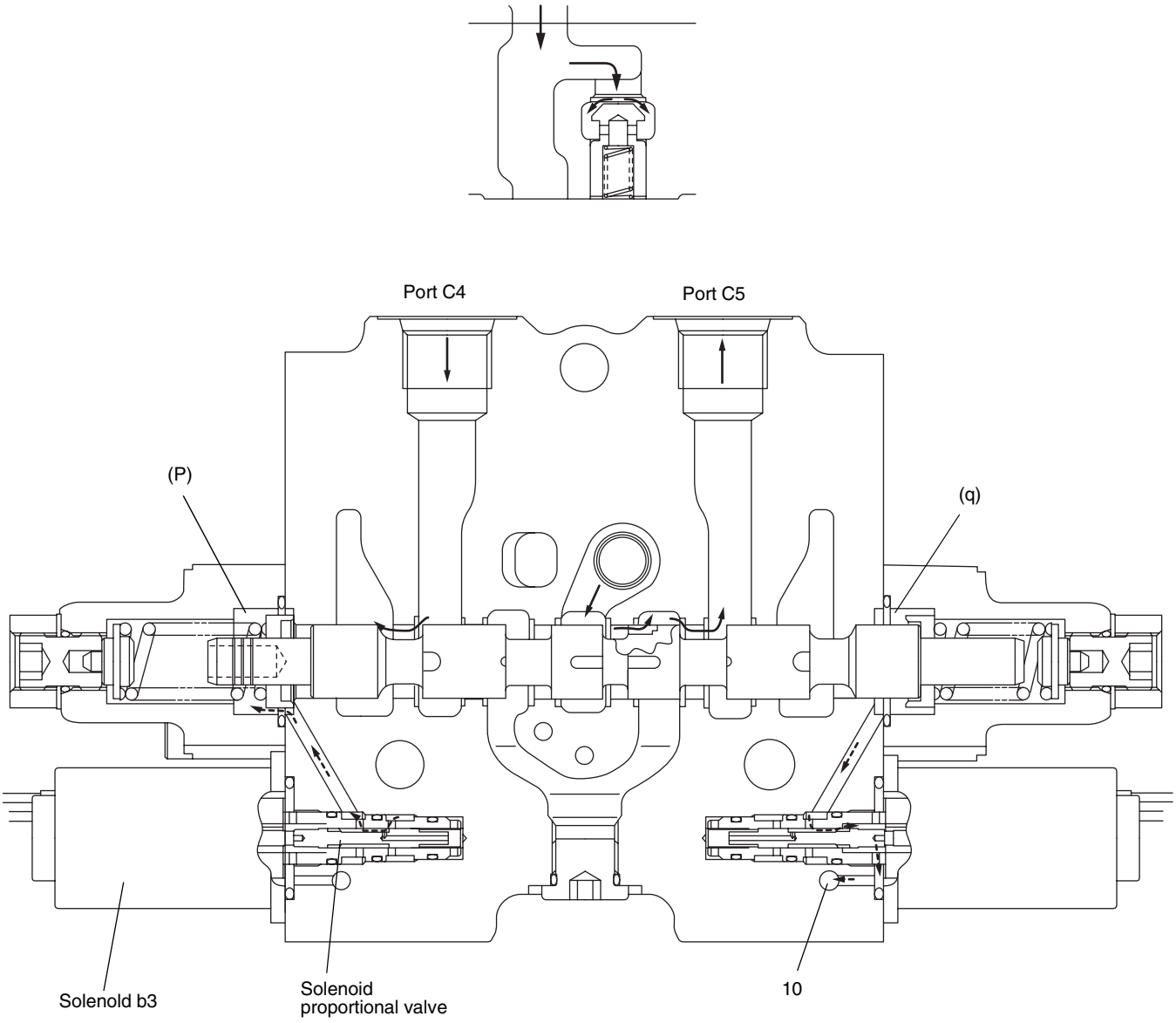

https://truckmanualshub.com/

4.0 ~ 5.0 ton models

- Pressure compensation system
  - When pressure compensation mechanism is ON
    When solenoid c1 is energized and the non-leak valve is closed, the pressure compensation mechanism operates the same way as for the 1.6 ~ 3.5 ton models.
  - When pressure compensation mechanism is OFF
    When solenoid c1 is not energized and the non-leak valve is open, the pressure oil from chamber (c) flows through diaphragm Q, then returns to the tank via chamber (h). Now chamber (a) has the same pressure as the tank, so all the pressure oil from port P returns to the tank via part E.

Operation of other mechanisms is the same as for the 1.6 ~ 3.5 ton models.

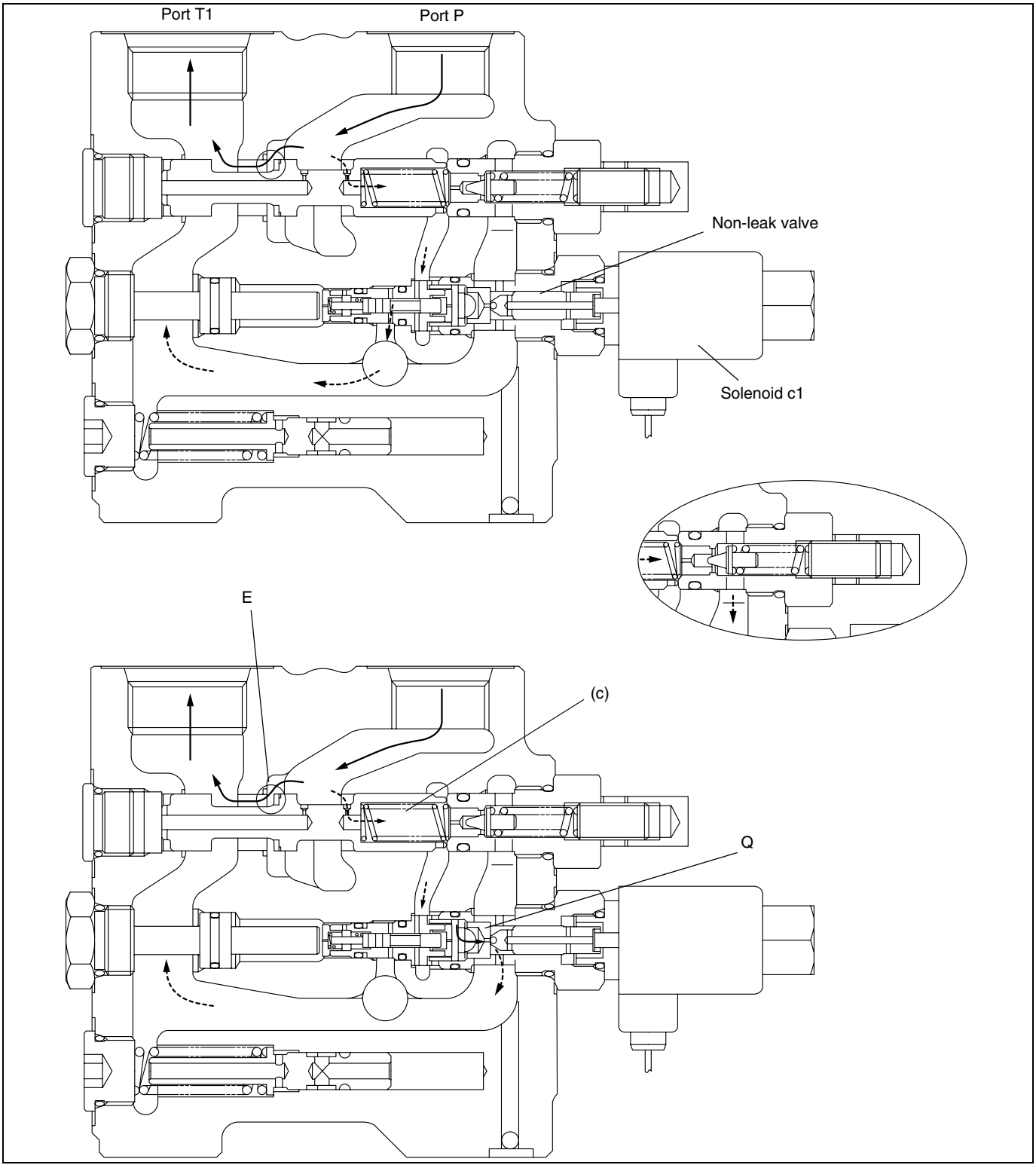

https://truckmanualshub.com/

PUMP MOTOR

■ General

1. The pump motor like the drive motor uses AC induction motor, ideal for the electric forklift design, featuring higher performance even with the compact sizing combined with the maintenance free advantage.
2. Making use of the advantages of the AC induction motor, the motor output has been upgraded with the result that either of the performance, with loaded or with unloaded has been improved.
3. Since the motor does not have brushes, it has become maintenance-free.

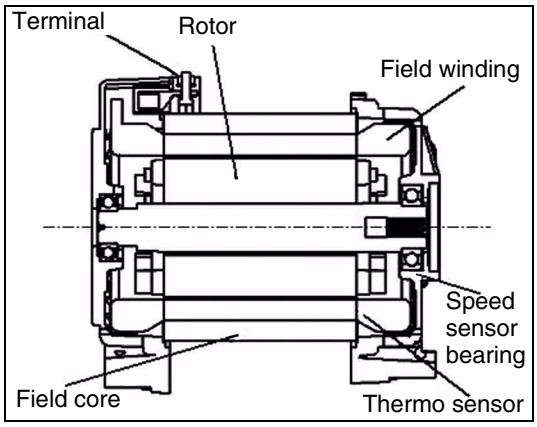

■ Specifications

	Models	Nominal voltage (V)	Rated output (kW)	Type	Body size (mm)	Weight (kg)
STD	7FBMF16, 18	72/80	12.0/13.5	Three phase AC	$\phi 240 \times 324$	57
	7FBMF20, 25, 30, 35	72/80	16.9/18.6	Three phase AC	$\phi 240 \times 339$	60
	7FBMF40, 45, 50	72/80	22.8/25.4	Three phase AC	$\phi 260 \times 427$	97

https://truckmanualshub.com/

STEERING MOTOR

The steering motor for use in 7FBMF series has been unchanged from that of FBM series, featuring the high output and reliance on quality.

Previous model				New model			
Voltage (V)	Size (mm)	Rated output (kW)	Type	Voltage (V)	Size (mm)	Rated output (kW)	Type
70	$\phi 114 \times 268$	1.0	DC permanent magnet	70	$\phi 114 \times 268$	1.0	DC permanent magnet

https://truckmanualshub.com/

OIL PUMP

An externally mounted type gear pump is used.
1.6 to 3.5 ton series use 1 pump as in the previous model.
4.0 to 5.0 ton series use dual pump. No.1 pump is used for load handling. No.2 pump is used for brake and power-steering.
The table below lists the oil pumps used for different load capacities and specification.

List of oil pumps

Truck	Pump type		Displacement (cc/rev)
7FBMF16 ~ 18	Single		25.5
7FBMF20 ~ 35	Single		33.2
7FBMF40 ~ 50	Dual	No.1	34.3
		No.2	12.02

https://truckmanualshub.com/

LIFTING SPEED

(80V SPEC)

Mast		Mode	7FBMF16		7FBMF18		7FBMF20		7FBMF25		7FBMF30		7FBMF35	
			NL (mm/s)	FL (mm/s)	NL (mm/s)	FL (mm/s)	NL (mm/s)	FL (mm/s)	NL (mm/s)	FL (mm/s)	NL (mm/s)	FL (mm/s)	NL (mm/s)	FL (mm/s)
V	Lifting	H	780	520	780	480	630	480	630	460	550	440	470	370
		P	750	470	750	420	600	440	600	420	520	400	450	330
		S	750	470	750	420	600	440	600	420	520	400	450	330
	Lowering	All	550	500	550	500	500	500	500	500	450	500	450	500
FV	Lifting	H	700	475	700	430	595	450	595	405	500	400	–	–
		P	675	435	675	400	565	425	565	385	480	370	–	–
		S	675	435	675	400	565	425	565	385	480	370	–	–
	Lowering	All	420	480	420	480	420	480	420	480	390	460	–	–
FSV	Lifting	H	720	470	720	420	600	450	595	400	525	395	455	345
		P	690	430	690	390	570	420	585	380	500	365	435	320
		S	690	430	690	390	570	420	585	380	500	365	435	320
	Lowering	All	450	480	450	480	450	480	450	480	420	460	420	460

Mast		Mode	7FBMF40		7FBMF45		7FBMF50	
			NL (mm/s)	FL (mm/s)	NL (mm/s)	FL (mm/s)	NL (mm/s)	FL (mm/s)
V	Lifting	H	510	330	510	320	420	280
		P	460	320	460	290	390	260
		S	460	320	460	290	390	260
	Lowering	All	500	500	500	500	500	500
FV	Lifting	H	495	335	495	320	–	–
		P	465	310	465	290	–	–
		S	465	310	465	290	–	–
	Lowering	All	500	450	500	450	–	–
FSV	Lifting	H	490	330	490	320	405	275
		P	460	310	460	290	380	250
		S	460	310	460	290	380	250
	Lowering	All	500	450	500	450	400	400

https://truckmanualshub.com/

TILT CYLINDER

The tilt cylinder for 7FBMF16 to 30 is changed from the previous model. It is the same cylinder as that of 7FGF25 series.

- The size of the tilt cylinder is reduced so that it can be hidden from the foot space.
- The front joint is changed from the screwed type to the rod welded type.
- The front pin for fixing the cylinder to the mast is changed to the eccentric pin which has been used for 7FGF25 series. It is used to allow a fine backward tilt adjustment and travel adjustment.
- The grease seal of the front joint is changed to the o-ring to prevent disengagement of the sealing during assembling.

The tilt cylinder for 7FBMF35 is the same cylinder as that of 7FGF25 series.
The tilt cylinder for 7FBMF40 to 50 is the same as that of 7FD35 series. Its structure is the same as that of 7FBMF16 to 35.

The tilt cylinder boot is newly available as an option. Covering the cylinder rod with this part, the rod is prevented from rust and damage.

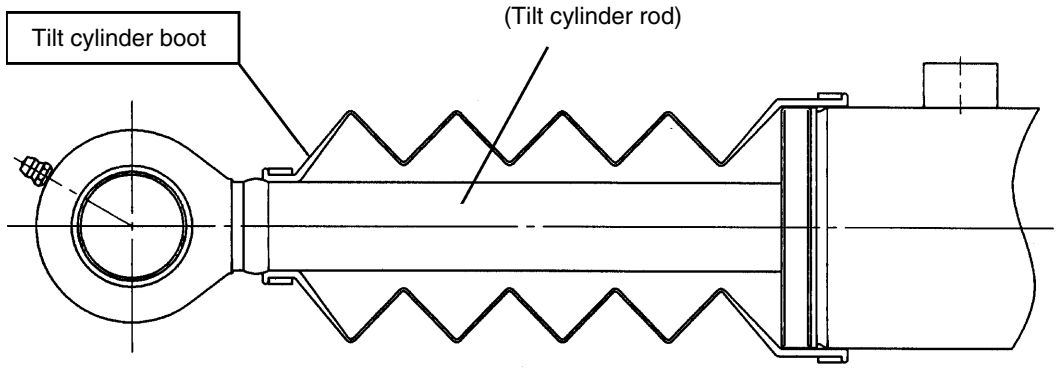

https://truckmanualshub.com/

OIL TANK

■ Oil tank 1.6 ~ 3.5 ton (same as in previous model)

Tank is constructed of welded iron plates, independent of the frame structure, bolted on the rear frame.
Filling and checking of oil can be carried out easily by opening the battery hood.
Return filter is under the front toe-board.

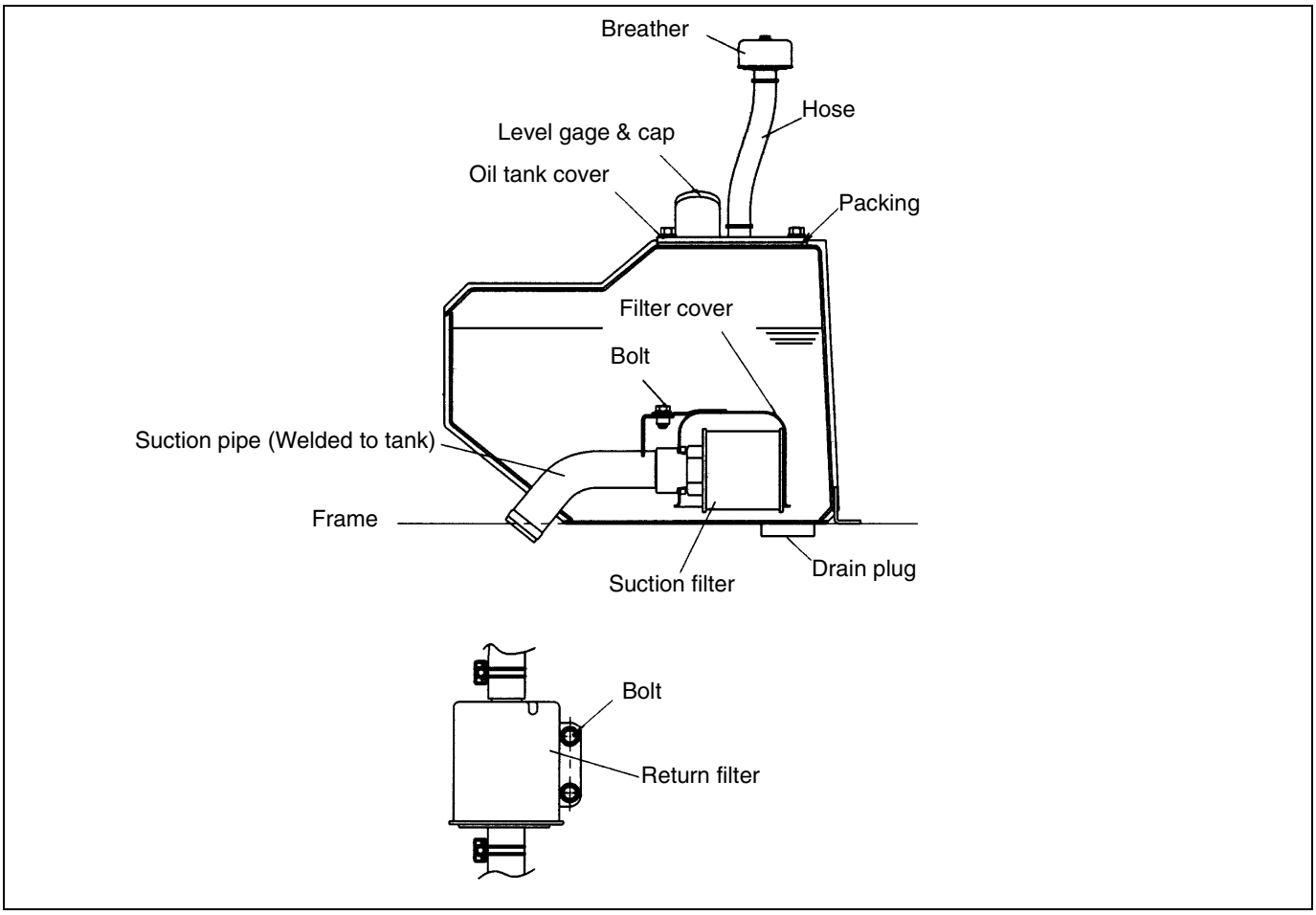

https://truckmanualshub.com/

■ Oil tank 4.0~5.0 ton

Tank is constructed of welded iron plates, independent of the frame structure, bolted on the side of left frame. Filling and checking of oil can be carried out easily by opening the battery hood.

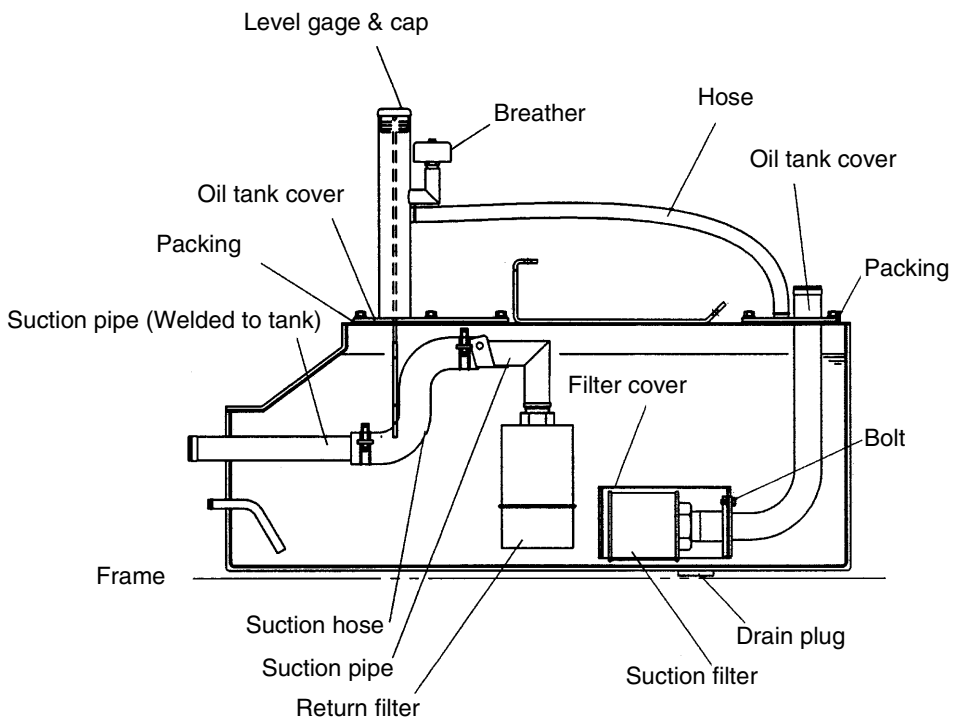

https://truckmanualshub.com/

OTHER HYDRAULIC PARTS

■ Oil tank cover (same as in previous model)

The oil tank cover is constructed with various pipes welded to it. A special packing that completely prevents ooze or leakage of oil is used for positive sealing.

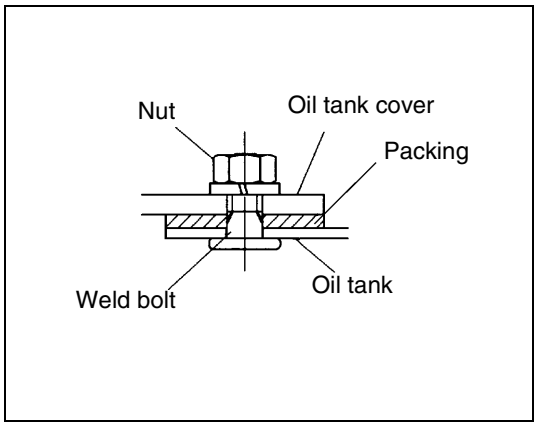

■ Oil tank cap

A rubber plug-in type cap is employed. Just as on the old models, the breather is separated for compactness.
The oil level is checked by holding the end of the cap lightly in contact with the retainer port as shown in the figure.

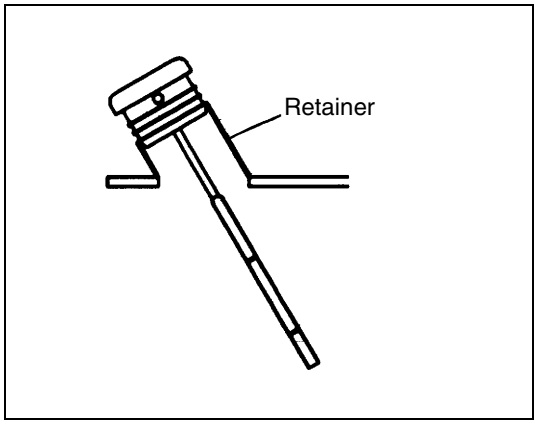

■ Breather (same as in previous model)

The breather is installed separately from the cap to prevent oil leakage positively from the breather.
(40 μ mesh)

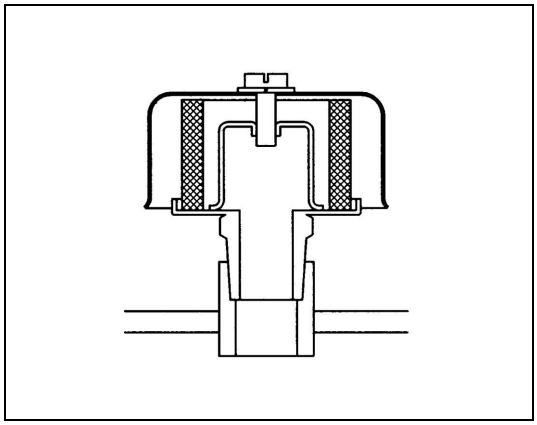

https://truckmanualshub.com/

A4 PIPING

1: List of available A4 type

Piping type	Oil control valve	Numbers of hoses	Piping position	7FBMF16 ~ 30			7FBMF35	
				Mast			Mast	
				V	FSV	FV	V	FSV
A405	4-way	0	None	○	○	○	○	○
A410	3-way	2	Inside	○	○	○	○	○
A430	4-way	2	Inside	○	○	○	○	○
A450	4-way	4	Inside	○	○	○	○	○

Piping type	Oil control valve	Numbers of hoses	Piping position	7FBMF40, 45			7FBMF50	
				Mast			Mast	
				V	FSV	FV	V	FSV
A405	4-way	0	None	○	○	○	○	○
A410	3-way	2	Inside	○	○	○	○	○
			Outside	—	△	—	—	—
A430	4-way	2	Inside	○	○	○	○	○
			Outside	—	△	—	—	—
A450	4-way	4	Inside	○	○	—	○	—
			Outside	—	△	○	—	○

○ : Availale, △: Option, —: Nonavailable

2: Piping layout
7FBMB16 ~ 30 V: The piping is changed to the hose-integrated type from the pipe and hose type of the previous model. The piping is simplified and the front visibility is improved. The attachment connector on the lift bracket is changed to the fitting type from the pipe type of the previous model. This new piping layout is the same as that of 7FGF25 series.

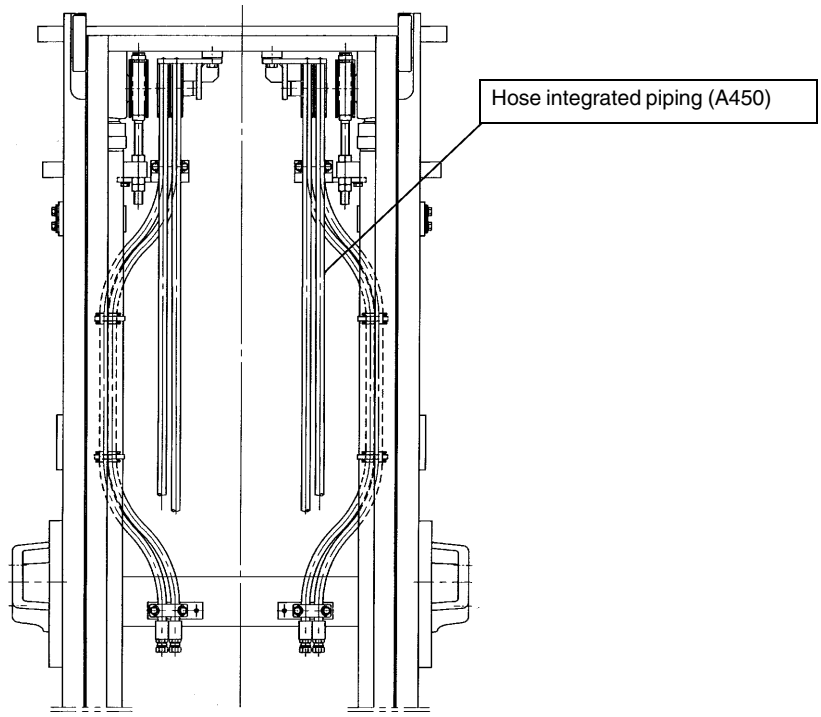

https://truckmanualshub.com/

7FBMF35 V
The piping is the hose-integrated type and the same as that of 7FGJF35.

7FBMF40 ~ 50 V
The piping is the hose-integrated type and the same as that of 7FD35 series.

7FBMF16 ~ 30 FSV, FV
The piping is the same as that of the previous model.

7FBMF35 FSV
The piping is the same as that of 7FGJF35.

7FBMF40, 45 FSV, FV
The piping is the same as that of 7FD 35. As the standard of FSV A4 piping, the piping position is the inside of the mast, and we prepare the outside piping of the mast as an option for better front visibility.

7FBMF50 FSV
The piping is the same as that of 7FD45.

3: Free lift
The free lift without backrest of the FSV and FV mast is reduced as shown is the table below when the A4 piping is assembled because the pulley for the A4 piping must be mounted on the front cylinder.

(mm)

Mast	7FBM16, 18	7FBMF20	7FBMF25	7FBMF30	7FBMF35	7FBMF40, 45	7FBMF50
FSV	Same as the mast w/o A4 piping	Same as the mast w/o A4 piping	Same as the mast w/o A4 piping	-80	Same as the mast w/o A4 piping	Same as the mast w/o A4 piping	-115
FV	-125	-75	-105	-150	—	Same as the mast w/o A4 piping	—

4: Tilt angle
The backward tilt angles of FV mast with A4 piping for 7FBMF16 to 25 and 7FBMF40, 45 are different from those of the standard trucks to prevent the interference of the piping with the truck frame.

	Backward tilt angle			
	7FBM16, 18	7FBMF20	7FBMF25	7FBMF40, 45
FV mast (STD)	9°	9°	10°	12°
FV mast (A4)	5°	5°	6°	10°

Note: This modification concerns with the A410, A430 and A450 piping.

https://truckmanualshub.com/

5: Termination type
7FBMF16 ~ 35
The position of the A4 piping termination on the lift bracket is the same as that of the 7FGF25 series.

7FBMF40 ~ 50
The position of the A4 piping termination on the lift bracket is the same as that of the 7FD35 series.

The screw size of the termination fitting is 9/16-18 UNF.

CTR: Center termination, RH SIDE: Right-hand side termination
CTR & LH SIDE: Center and left-hand termination, RH SIDE: Right-hand side termination
RH & LH SIDE: Right-hand and left-hand side termination, —: Unavailable

Piping type		7FBMF16 ~ 30			7FBMF35	
		Mast			Mast	
		V	FSV	FV	V	FSV
A405	STD	NONE	NONE	NONE	NONE	NONE
A410	STD	CTR	RH SIDE	RH SIDE	CTR	RH SIDE
	OPT	—	CTR	CTR	—	CTR
A430	STD	CTR	RH SIDE	RH SIDE	CTR	RH SIDE
	OPT	—	CTR	CTR	—	CTR
A450	STD	CTR	RH & LH SIDE	RH & LH SIDE	CTR	RH & LH SIDE
	OPT	—	CTR & LH SIDE	CTR & LH SIDE	—	CTR & LH SIDE

Piping type		7FBMF40, 45			7FBMF50	
		Mast			Mast	
		V	FSV	FV	V	FSV
A405	STD	NONE	NONE	NONE	NONE	NONE
A410	STD	CTR	CTR	CTR	CTR	CTR
	OPT	—	RH SIDE	—	—	—
A430	STD	CTR	CTR	CTR	CTR	CTR
	OPT	—	RH SIDE	—	—	—
A450	STD	CTR	CTR	RH & LH SIDE	CTR	RH & LH SIDE
	OPT	—	RH & LH SIDE	—	—	—

https://truckmanualshub.com/

SAS

Page

OUTLINE OF SAS 11-2
ACTIVE CONTROL REAR STABILIZER 11-6
ACTIVE MAST FUNCTION CONTROLLER 11-10
ACTIVE STEERING SYNCHRONIZER FHPS 11-14

https://truckmanualshub.com/

OUTLINE OF SAS

General

1. Excellent stability and high-technology realized in our forklift is sure to gain customer's satisfaction.
2. On basis of the engineering theme "safe material handling".
   SAS (System of Active Stability) has been developed.

■ Purpose of SAS

Active control rear stabilizer	➔	The rear axle beam swing function can be locked whenever necessary to ensure steady footing. Thus enhancing lateral stability remarkably.
Active mast function controller	➔	(1) Longitudinal stability is improved by adopting the mast front tilt angle control. (2) Mast rear tilt angle speed control is adopted to prevent load from falling. (3) Automatic fork leveling control is adopted to improve operating efficiency. (4) Key-lift interlock is adopted.
Active steering synchronizer with FHPS	➔	Characteristics of turning and straight traveling are improved by developing active steering synchronizer with FHPS.

FHPS: Full Hydraulic Power Steering

https://truckmanualshub.com/

■ System configuration

Limit switches and sensors are installed at various positions of the vehicle. These sensors detect the condition of various components of the vehicle and send specific signals to the controller. These signals are processed by the controller, and then specific commands are sent to each actuator to perform desired motion.

Input			
Sensor \ Control	S	T	K
Lift height switch	○	○	
Tilt angle sensor		○	
Tilt lever potentiometer		○	
Automatic fork leveling switch		○	
Load sensor	○	○	
Vehicle speed sensor	○		○
Steering wheel angle sensor			○
Yaw rate sensor	○		
Tire angle sensor			○

- SAS(with PS) Controller (* 1)
- Main controller
- Traveling controller
- Material handling controller

Output	
Control	Actuator
S	Swing lock cylinder
T	Electric proportional oil control valve
K	Steering synchronizer solenoid
S, T, K	LCD display • Swing lock indicator • Diagnosis

S: Active rear stabilizer control
T: Active mast function control
K: Active steering synchronizer

Mast control is performed by the main controller and the material handling controller. Active control rear stabilizer is controlled by the SAS (with PS) controller (*1), the main controller and the traveling controller. The controllers communicate with each other.
*1: 4.0 ton to 5.0 ton models use the SAS controller instead of the SAS (with PS) controller.

https://truckmanualshub.com/

■ Names and functions of each component

1. Names of each component

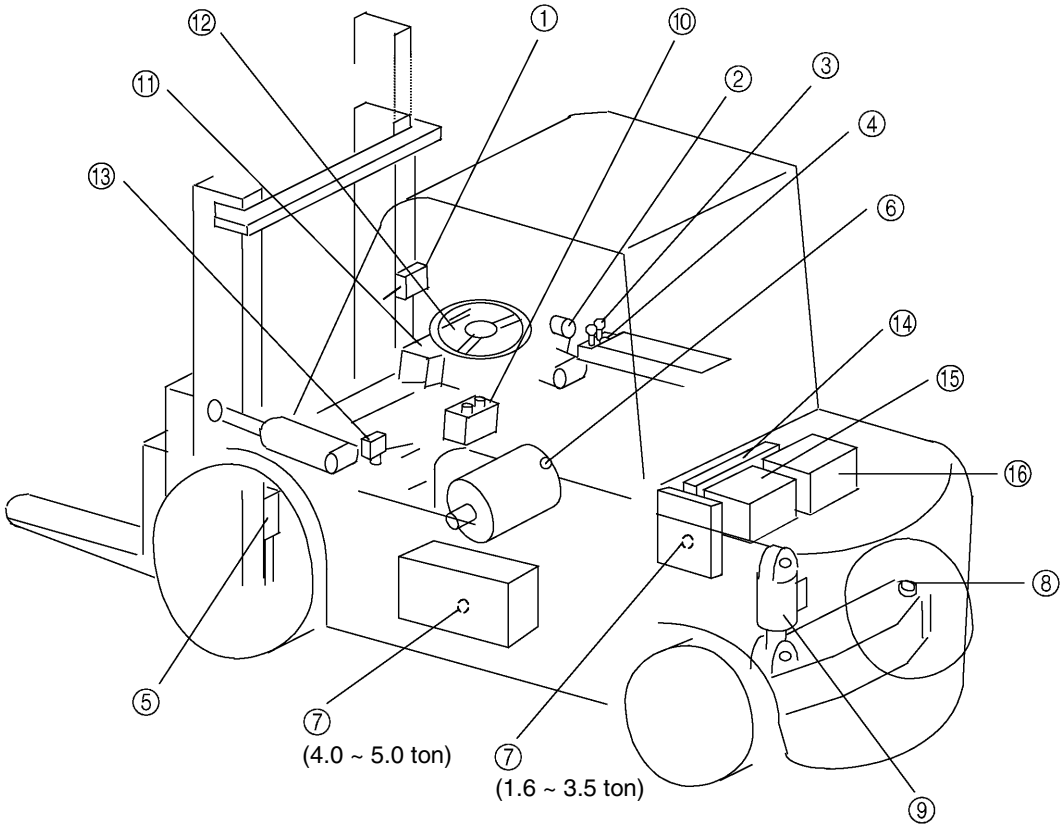

① Lift height switch
② Tilt angle sensor
③ Tilt lever potentiometer
④ Automatic fork leveling switch
⑤ Load sensor
⑥ Vehicle speed sensor
⑦ Yaw rate sensor
- 1.6 ton to 3.5 ton
  <in the SAS (with PS) controller case>
- 4.0 ton to 5.0 ton
  <in the SAS controller case>

⑧ Tire angle sensor
⑨ Swing lock cylinder
⑩ Electric proportional oil control valve
⑪ LCD display
- Swing lock indicator
- Diagnosis

⑫ Steering wheel angle sensor
⑬ Steering synchronizer solenoid
⑭ Main controller
⑮ Traveling controller
⑯ Material handling controller

https://truckmanualshub.com/

2. Functions of each component

Input to controller

No.	Name	Function
①	Lift height switch	The limit switch installed on the outer mast detects the height of the inner mast. Then it is determined whether the lift is on the lower stage or upper stage with respect to the specified height.
②	Tilt angle sensor	The angle sensor installed on the front protector above the right tilt cylinder detects the tilt angle of the mast by measuring the turning angle of the mast around the rear pin of the tilt cylinder.
③	Tilt lever potentiometer	The potentiometer installed on the shaft of the tilt lever detects the operation angle of the tilt lever.
④	Automatic fork leveling switch	This switch is used to automatically level the fork and also to reduce the rear-tilting speed when the lift height is determined to be on the lower stage.
⑤	Load sensor	The pressure sensor installed in the hydraulic circuit of the lift cylinder detects the load.
⑥	Vehicle speed sensor	The sensor installed in the traveling motor detects the vehicle speed from the number of revolutions of the pickup gear.
⑦	Yaw rate sensor	The sensor installed within the controller case detects the angular speed of the vehicle as it makes a turn.
⑧	Tire angle sensor	The sensor installed above the king pin on the right side of the rear axle detects the steered angle of the tire from the turned angle of the king pin.
⑨	Swing lock cylinder	When the specific command is received from the controller, the solenoid installed on the swing lock cylinder works to either lock or release the swing lock cylinder.
⑩	Electric proportional oil control valve	The electric proportional oil control valve has proportional solenoid valves on the tilt and lift circuit. These valves are controlled by the commands from the controllers. Then, the valve on the tilt circuit controls the active mast function and rear tilt angle speed, and the valve on the lift circuit controls lift lock and release.
⑪	LCD display	When the swing lock cylinder is fixed (locked), the swing lock indicator on the display illuminates. When the lock is released, the indicator is automatically extinguished.
		If there is malfunction in the SAS function, the spanner mark on the display blinks, and a buzzer sounds simultaneously, and it warns of the abnormalities. And the error code is displayed on the diagnostic digital indicator.
		The SAS system should be initialized with the display if servicing the SAS function. (Refer to the display section in the repair manual.)
⑫	Steering wheel angle sensor	The sensor installed at the foot of the steering wheel detects the turned angle of the steering wheel.
⑬	Steering synchronizer solenoid	When the specific command is received from the controller, the solenoid installed on the synchronizer valve works to either open or close the synchronizer valve and control the flow rate of hydraulic oil in the power steering cylinder, and thus corrects the knob position.

https://truckmanualshub.com/

ACTIVE CONTROL REAR STABILIZER

General

Forklift trucks are used to carry a heavy load, lift it high, and make a small turn with the load.
“Active Control Rear Stabilizer” is developed to ensure stability in operating these vehicles. In this system the vehicle information from each sensors is sent to the active control rear stabilizer.
The active control rear stabilizer then determines whether or not to send a specific command to relevant components to temporarily lock the swinging of the rear axle to stabilize the vehicle when the swing motion is disadvantageous.
Note that this active control rear stabilizer is not available for double tires vehicles.

■ Principles of active control rear stabilizer

The rear axle of the forklift is supported by the center pin in most cases. Therefore, it can be said that the vehicle weight is supported at three points as illustrated. The stability of the vehicle depends on where the center of gravity (G) is. As long as the center of gravity falls within the triangle formed by above three points, the vehicle stays stabilized. Otherwise, the wheels left ground and the vehicle is likely to tip over in the worst case. The swing lock mechanism is intended to disable the swinging function of the rear axle to stabilize the vehicle. When the swing is locked, the vehicle weight is supported by four points.

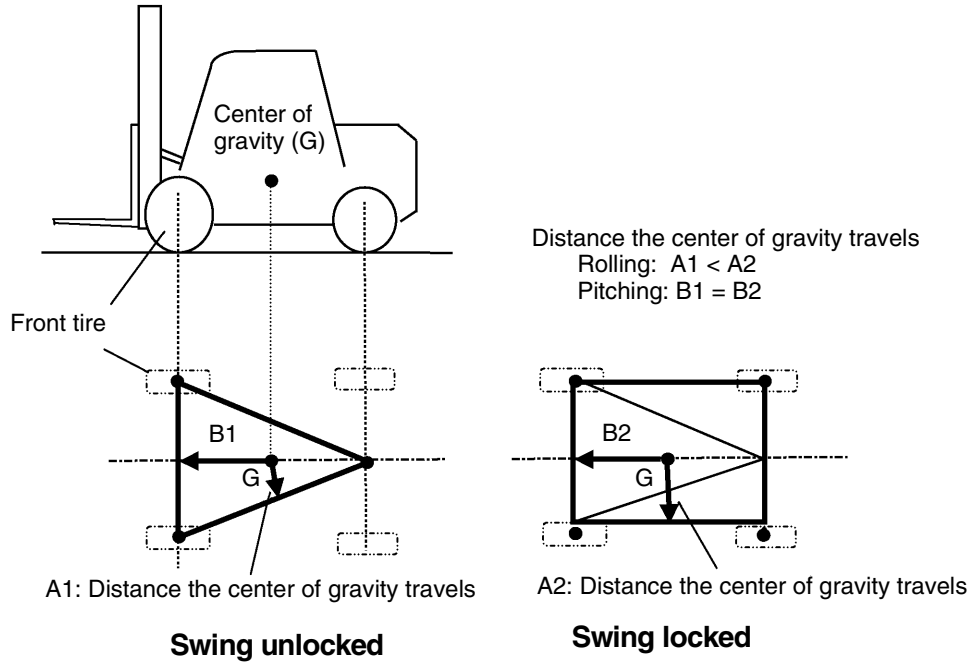

https://truckmanualshub.com/

It gives the center of gravity more allowances before it gets out of the safe area formed by the four points. In other words, the distance the center of gravity can travel in the square (A2) is larger than that in the triangle (A1), thus enhancing lateral stability as shown below. The longitudinal stability, on the other hand, will not be affected by the swing lock function because the center of gravity travels in the square (B2) is equal to that in the triangle (B1).

Caution: ***Do not blindly rely on the active control rear stabilizer*.**

- **When the swing lock is effected, the vehicle is more stable. But it does not necessarily mean that it will not turn over. So safety driving is always necessary.**
- **Never make a quick turn with the load lifted high.**
- **With a load lifted high, the center of gravity shifts forward and upward. As the result, the difference between A1 and A2 becomes small and the effect of the swing lock function will be reduced.**
  (Nevertheless the vehicle is less likely to turn over when the swing lock is enabled than when it is disabled.)

■ Control block diagram

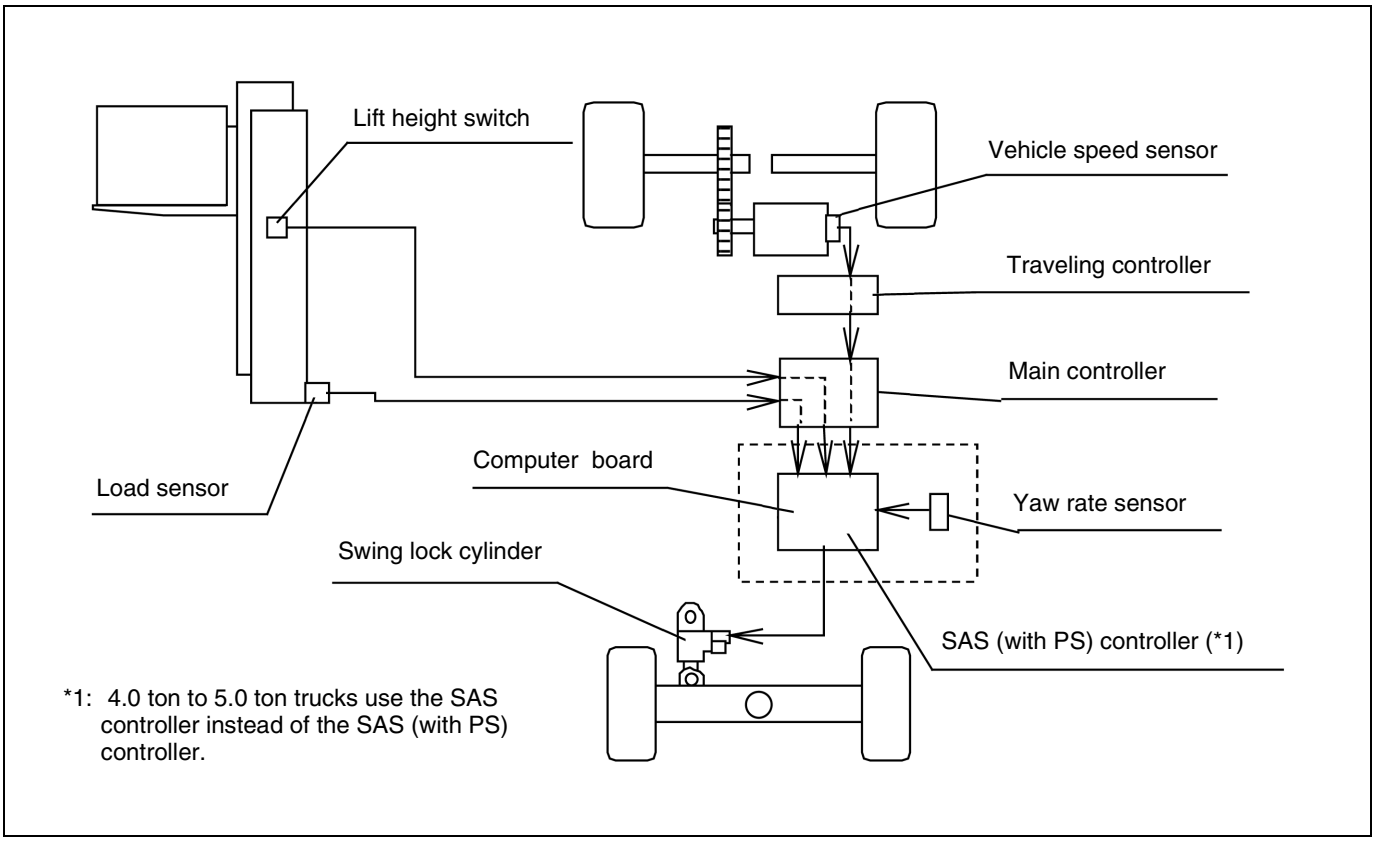

https://truckmanualshub.com/

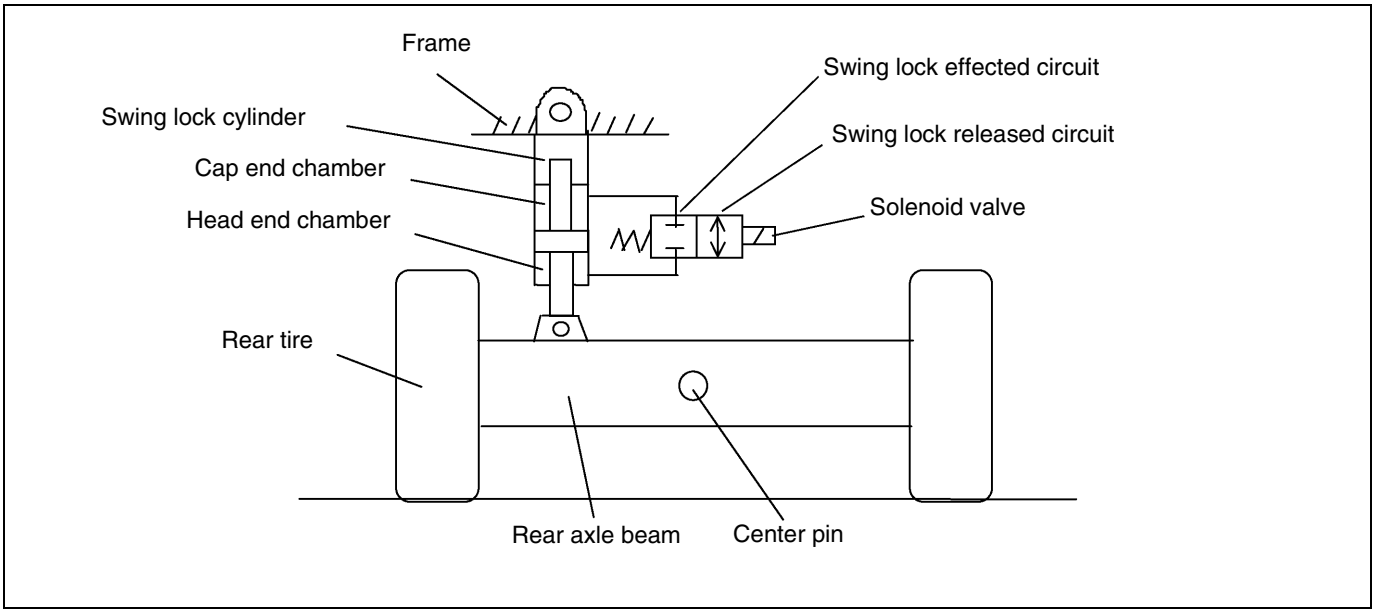

■ Structure and operation

The rear axle suspension method is the same as the previous model. It is designed to swing with respect to the center pin. The swing lock cylinder linked to the crank and rod is installed between the rear axle beam and the frame to temporarily stop the swinging motion of the rear axle. The swing lock cylinder is a chamber filled with oil. The oil can flow between the cap end chamber and the head end one through the solenoid valve circuit installed on the side of cylinder. The solenoid valve is controlled by the command signal sent from the controller. The solenoid valve is normally in OFF state and the swing is locked. As soon as the valve is turned ON, the swing lock will be released. When the swing lock command is sent from the controller, the power to the solenoid is shut immediately and the swing is locked. When the key switch is OFF, power is not supplied to the solenoid and the swing is locked. As soon as the key switch is turned on, the solenoid turns ON and the swing lock is released.

Swing lock released

The swing lock cylinder extends or contacts in response to the swing motion of the rear axle. This causes the oil inside the cylinder to move between the cap end and head end chambers of the cylinder through the solenoid valve circuit.

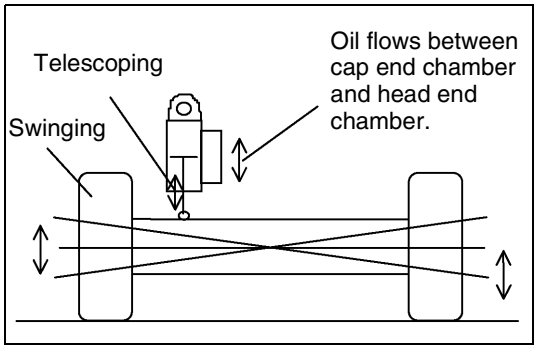

Swing lock effected

When the swing lock command is received from the controller, the swing lock solenoid valve circuit is closed and the oil inside the cylinder cannot move freely any more. This holds the piston in the cylinder and eventually the swing motion of the rear axle is locked.

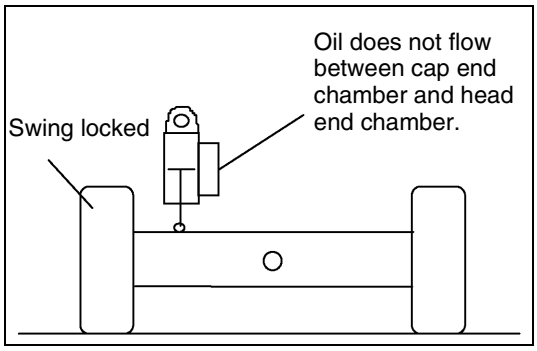

https://truckmanualshub.com/

■ Conditions of swing lock

There are two controller commanding routes for the swing lock. Whichever route it takes, the swing lock will engage.

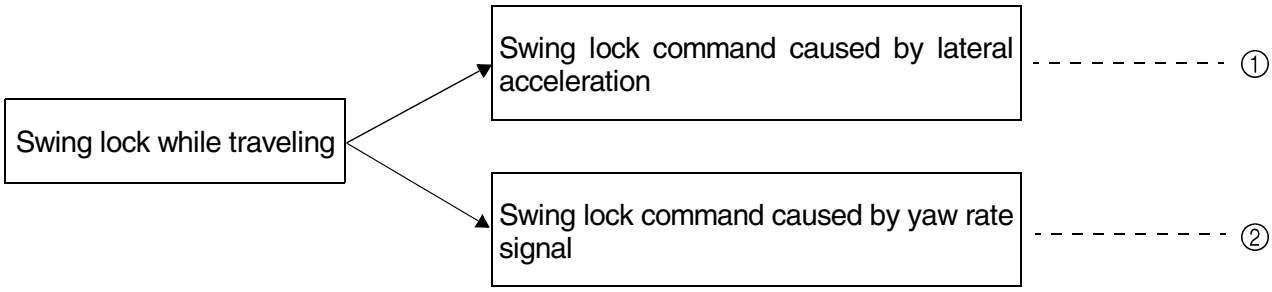

① Lateral acceleration
When the vehicle makes a turn, a centrifugal force is generated and gravitational acceleration works in crosswise direction as to turn over the vehicle. This is called lateral acceleration G. As soon as the lateral acceleration G exceeds the specified value, the swing lock command is issued.

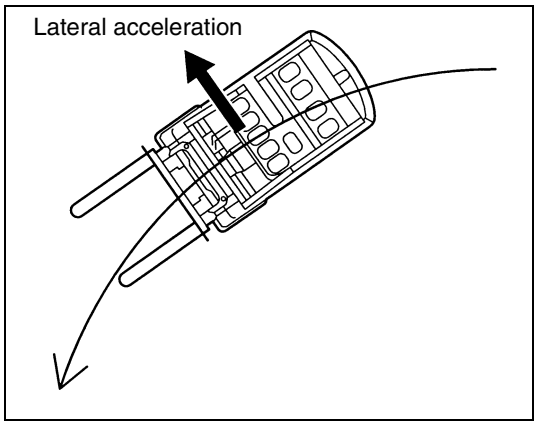

② Yaw rate lock
When the vehicle makes a turn yawing occurs. The operator feels this as the rolling. This motion is detected by the yaw rate sensor, and then the controller can compute the yaw rate degrees. As soon as the yawing exceeds the specified value, the swing lock command is issued.

Yawing: Yawing is a turn about of the vehicle vs. the vertical axis that passes the gravity center of the vehicle.

Yaw rate: The turn angle about the vertical axis that passes the gravity center of the vehicle is called yawing angle. The angular speed of yawing is called yaw rate.

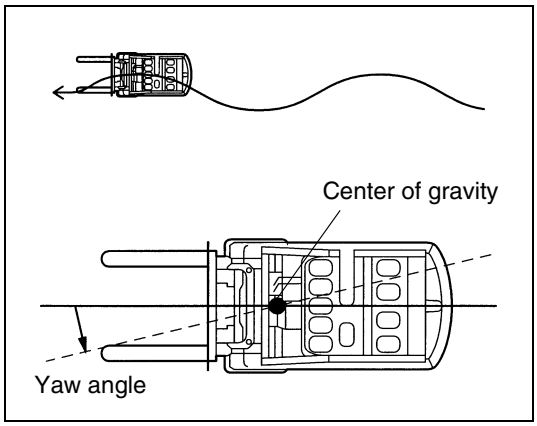

https://truckmanualshub.com/

ACTIVE MAST FUNCTION CONTROLLER

General

The active mast function controller has the following features.

1. Active mast front tilt angle control
   This function automatically moderates the front tilt angle of the mast depending on the load and lift height. It can prevent the load from falling or the vehicle from turning over in such a case as the operator inadvertently tilted the mast excessively forward.
2. Active mast rear tilt speed control
   The function automatically reduces the rear tilting speed at high lift height in order to prevent the load from falling. Even for low lift height, it is possible to reduce the rear tilting speed of the mast by operating the rear tilt with the automatic fork leveling switch depressed.
3. Automatic fork leveling control
   When the tilt lever is operated forwards with the automatic fork leveling switch depressed, the fork will level (mast vertical) and stop at the same position automatically. This function is useful when stacking loads or when retrieving a load from the stack.
4. Key-lift interlock
   Even the lift lever is operated forwards when the key switch is OFF, the key-lift interlock prevent the fork from lowering.

■ Control block diagram

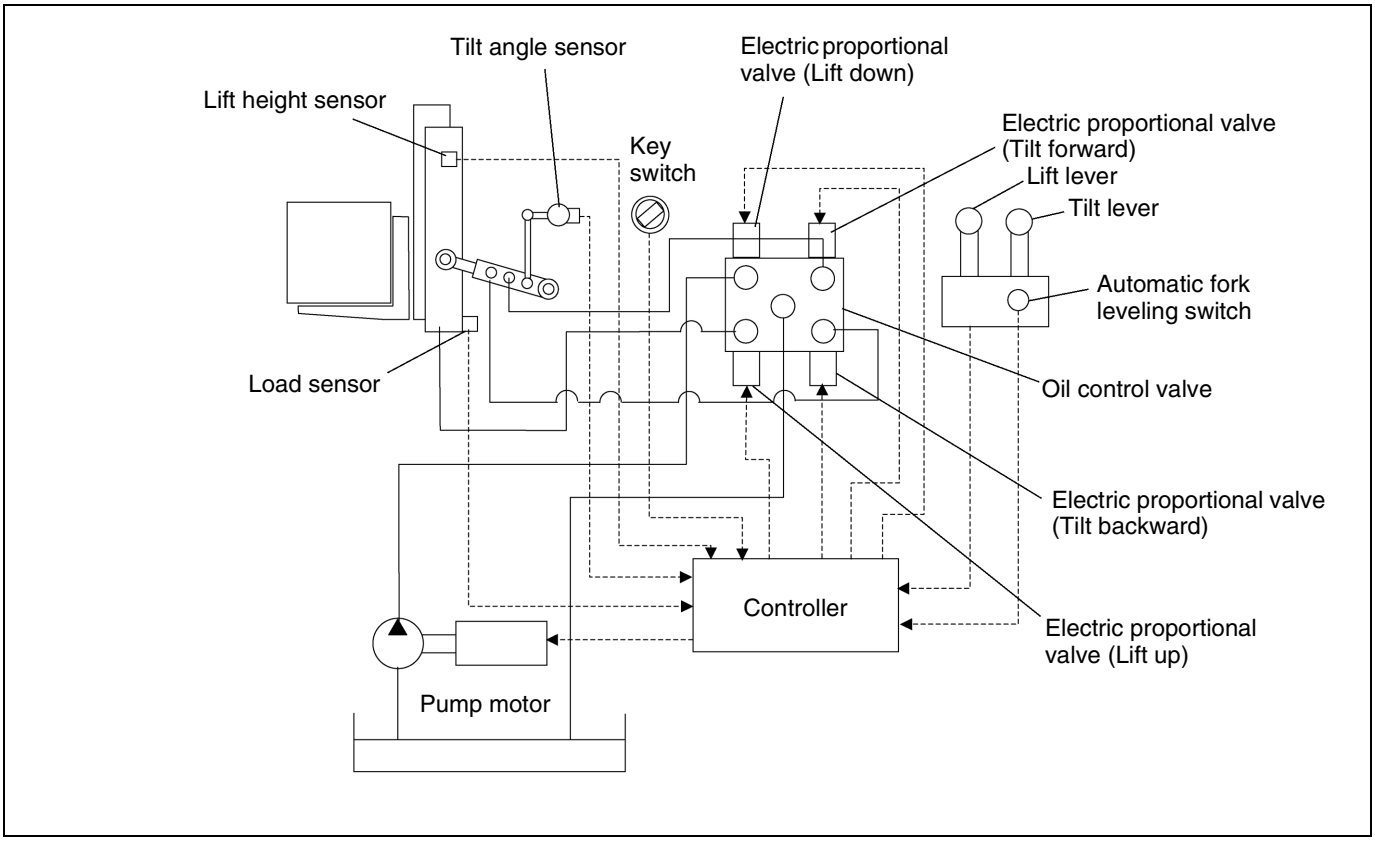

https://truckmanualshub.com/

Description of operation

■ Active mast front tilt control

1. The forward tilt angle varies depending on the lift height and load as follows:

	Light load (no load)	Intermediate load	Heavy load
High lift height	No restriction for front tilt angle	Angle restricted between 1°	Forward tilt angle restricted to 1°
Low lift height	No restriction for front tilt angle		

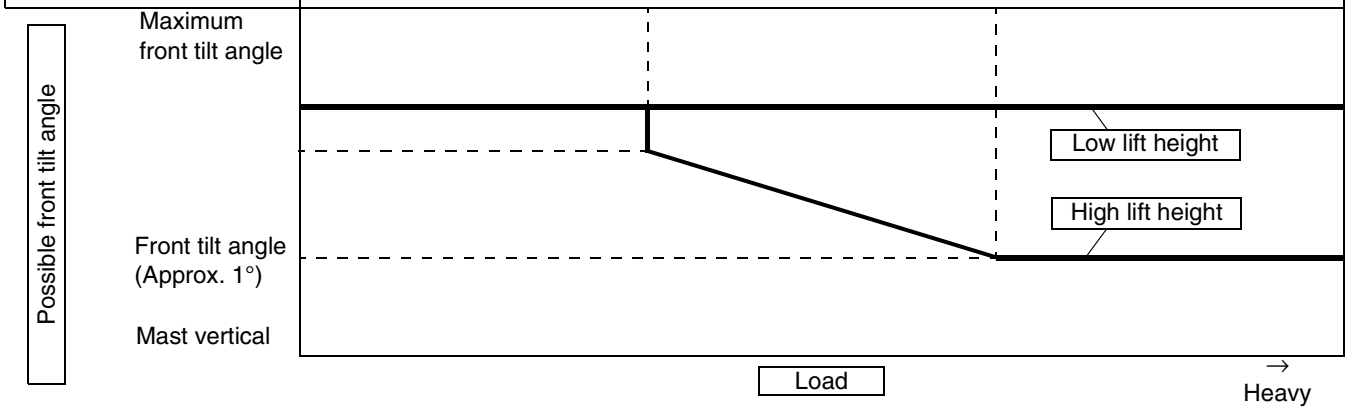

2. The actual front tilt angle may exceed the restricted forward tilt angle when a load is lifted at a small lift height with the mast tilted forward. As with the previous model, this must be avoided absolutely.
3. If a light load is at the highest uplifting end, the pressure used to relieve the valve remains, and the pressure sensor detects it as a heavy load. Therefore, the front tilt angle is restricted. It is possible to let it tilt forward if the mast as lowered a little.
4. If a large-sized heavy attachment is to be installed on the mast, the mast front tilt angle control may have to be disused.

Caution: ***Do not blindly rely on the active mast front tilt angle control.***

- **The front tilt angle is reduced depending on the load and lift height, but it does not necessarily mean that the load will never fall down or that the vehicle will never turn over.**
- **As with the previous model, never allow the mast to tilt forward from the vertical position with the load raised high. Even if the load is less than the rated capacity, longitudinal stability may be lost and the vehicle may turn over.**
- **Never use the active mast front tilt angle control for work.**

https://truckmanualshub.com/

■ Active mast rear tilt speed control

1. In the upper lift height stage, the rear tilt speed is restricted to be slow regardless of the load. The speed restraint will be continued if the lift enters the lower stage from the upper stage during rear tilting process.
2. In the lower lift height stage, there is no speed restriction for rear tilting regardless of the load. It is possible, however, to restrain the rear tilt speed by operating the rear tilt with the fork automatic leveling switch depressed. As long as the switch is pressed, the restraint will be effective.
3. When the fork enters upper lift height stage from the lower one, the rear tilt speed will be restrained as long as the switch is depressed. If the switch is not depressed, the fully open speed will be applied.

■ Automatic fork leveling control

When the tilt lever is operated from the rear tilt position to forward with the switch depressed, the fork automatically levels itself (mast vertical) and then the mast tilting comes to a stop. Note that the lift height and load conditions must be considered, as shown:

	No load	Loaded
High lift height	Stop with leveling forks (mast vertical)	No front tilt
Low lift height	Stop with leveling forks (mast vertical)	Stop with leveling forks (or up to 1° to rear side) depending on the load

Caution:
- **Under the loaded condition and the forks at high lift position, if the automatic fork leveling switch is depressed, forward tilting motion will be suspended. This operation must not be applied to the material-handling job. The turn over accident may take place depending on the conditions under which truck is placed.**
- **For the vehicle equipped with attachments, it is dangerous to use the fork automatic leveling control with the maximum lever stroke and the lift height in the upper stage.**
- **The automatic fork leveling function may be omitted if a heavy weight attachment is mounted on the vehicle.**

■ Key-lift interlock

1. The new electric proportional oil control valve is designed for controlling the mast. At the same time, the lift hydraulic circuit is modified.
2. The lift will not go downward if the down lifting is operated with the key switch turned OFF.
3. The lift hydraulic circuit equipped with a lift lock valve, and when the key switch is OFF, the solenoid valve is closed, so even if the lift lever is operated, the forks do not descend. To lower the forks, turn the key switch to ON first and then perform the lowering operation.

https://truckmanualshub.com/

■ Availability of the mast control in reference to attachment extra weight

In case that the heavy attachment is used, if the additional weight (due to attachment) value exceed the values shown in the table, on such a truck model, the tilt forward angle is restricted to approx. 1°, and it is impossible to use the automatic fork leveling control at high lift height.

kg

Max. fork height mm	1.6 ton	1.8 ton	2.0 ton	2.5 ton	3.0 ton	3.5 ton	4.0 ton	4.5 ton	5.0 ton
~ 3000	700	800	950	950	1200	1400	1500	1800	1800
3300 ~ 4000	700	700	950	950	1200	1400	1500	1600	1600
4300 ~ 5000	600	650	900	900	1000	1000	1500	1500	1500
5500 ~ 6000	450	550	650	800	800	1000	1200	1500	1500
6500 ~ 7000	—	—	—	—	500	500	—	—	—

https://truckmanualshub.com/

ACTIVE STEERING SYNCHRONIZER FHPS

General

1. A sensor installed under the steering wheel detects the wheel angle and the tire angle sensor installed above the rear axle king pin detects the rear tire angle. If any mismatch is found between the two angle date, the solenoid valve opens to compensate the difference.
2. The controller sends a specific command to the solenoid valve to activate the solenoid valve. As the result, a bypass circuit is formed and part of the hydraulic oil to be supplied to the PS cylinder is returned to the tank. The correlation between the steering wheel knob position and the tire angle is kept in this way.
3. This compensation may be omitted for safety depending on the vehicle condition such as vehicle speed.
4. Even if a knob displacement occurs following servicing, it can be automatically corrected by turning the steering wheel from lock to lock after turning on the key switch.

■ Control block diagram

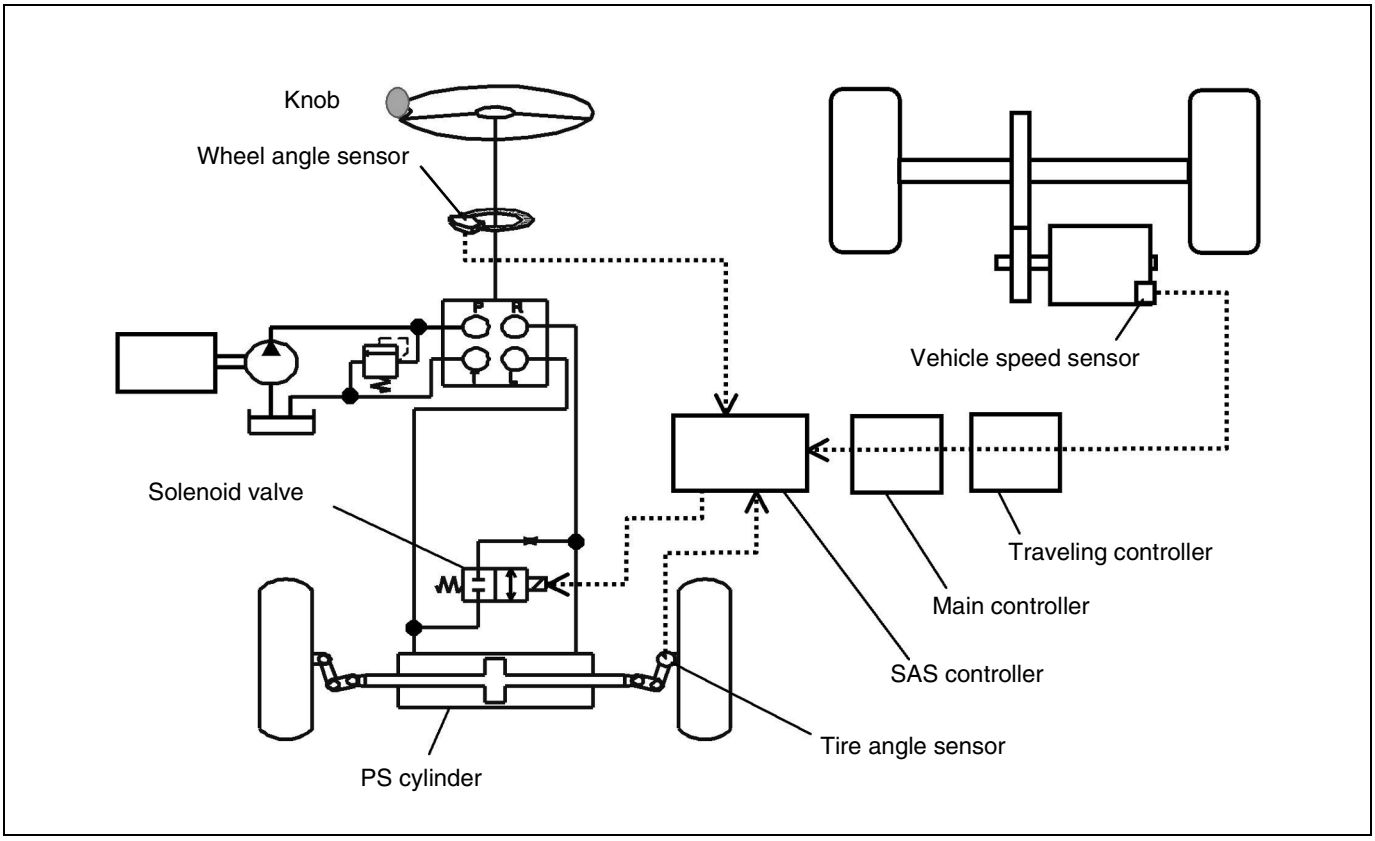

https://truckmanualshub.com/

MAIN OPTIONS & ATTACHMENTS

Page

FISHERMAN SPECIAL 12-2

BATTERY ROLL-OUT 12-3

HIGH HEIGHT BATTERY TYPE 12-6

FULLY OIL CHARGED LIFT CYLINDER 12-9

DUAL TIRES 12-9

MASTLESS 12-10

CAUTIONS IN ORDERING 12-11

ATTACHMENT LIST 12-13

https://truckmanualshub.com/

FISHERMAN SPECIAL

The fisherman special whose anti-rust effect is higher than STD model is newly set up as an option. Please recommend this to the customers who use 7FBMF series in severe working condition, e.g. :
- in the marine products industry,
- in the chemical industry,
- on wet or salty road,
- in high humidity,
- carrying a tank filled salt water,
- using oxidizable solution such as hydrogen peroxide water and sodium hypochlorite.
- on road with fusion agent such as chlorination calcium.

It is natural that fisherman special models as compared with the standard models, the former is disadvantageous as long as the heat radiation is concerned since the waterproof is indispensable. Therefore, the operation ratio should be restricted into 60% of the standard performance, so that the temporal decline of the performance may be encountered in the fisherman special model, but it is normal because the priority is given to the protection of the motors and the controller from overheating especially under the severe operative condition.
The sensors built in the controller and the motors can detect the predetermined heat levels with the result that the current to be supplied to the motor is restricted from the commandment of the controller and a warning message is indicated on the monitoring display.
In this case, please make the truck rested for a while until the warning disappears.

Item	Content
Drive motor	Waterproof type
Direction switch	Nickel chrome plating lever
PS cylinder	PS cylinder boot
Brake switch	Waterproof type
Brake pipe	Fluorine coating
Covers	Under the front-protector cover
	Tilt cylinder hole cover
Mast	Anti-rust roller
	Fully oil charged lift cylinder
Tilt cylinder	Tilt cylinder boot
Bolt	Rust preventive treatment (Covers, Tilt pin)

https://truckmanualshub.com/

BATTERY ROLL-OUT

Model

Available for 7FBMF16 to 50.

Structure

In order to replace the OPT size battery from RH side, the battery roll-out specifications use different parts such as the frame, the seat stand, the side hood and the rear toe board from standard.
(They are not available for STD size battery.)
Main structure is as illustrated:

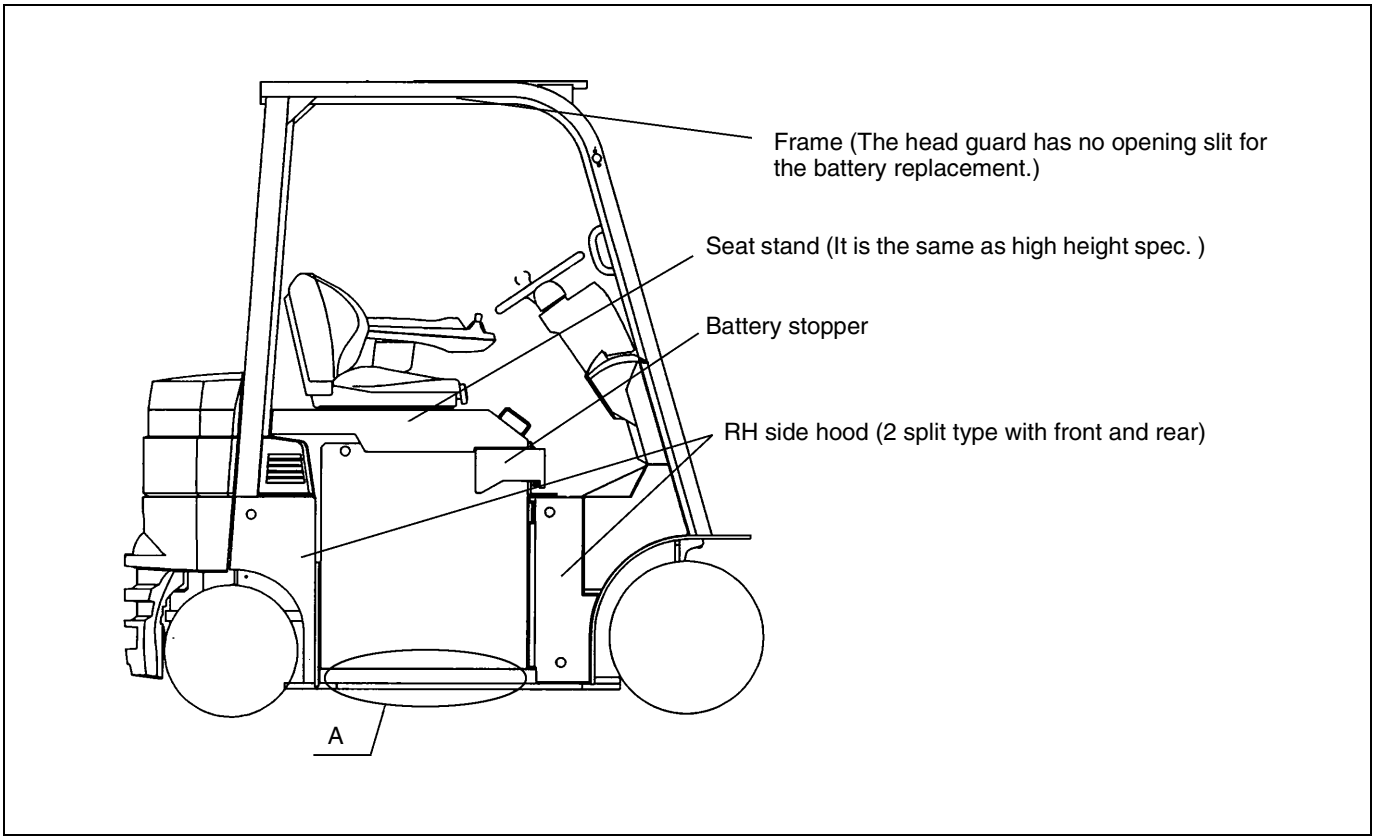

* Portion “A”
The metal strips and rollers can be mounted under the battery.

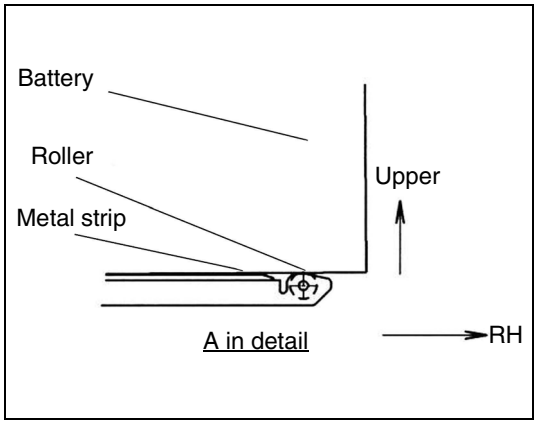

https://truckmanualshub.com/

Battery removal procedure

Remove the battery according to the following procedure.
(7FBMF16 ~ 35)

1. Open the seat stand.
2. Open the battery stopper.
3. Slide out the battery to the right.

To install the battery, reverse the above procedure.
Note: Use the same procedure as on high height spec. to open and close the seat stand.

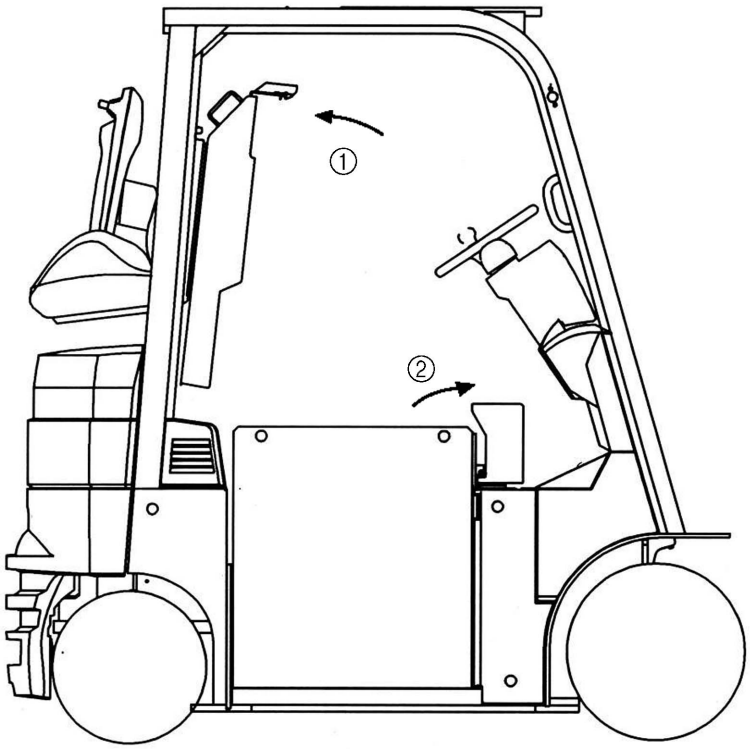

https://truckmanualshub.com/

(7FBMF40 ~ 50)

1. Open the seat stand.
2. Release the battery stopper lock.
3. Open the battery stopper.
4. Slide out the battery to the right.

To install the battery, reverse the above procedure.
Note: Use the same procedure as on high height spec. to open and close the seat stand.

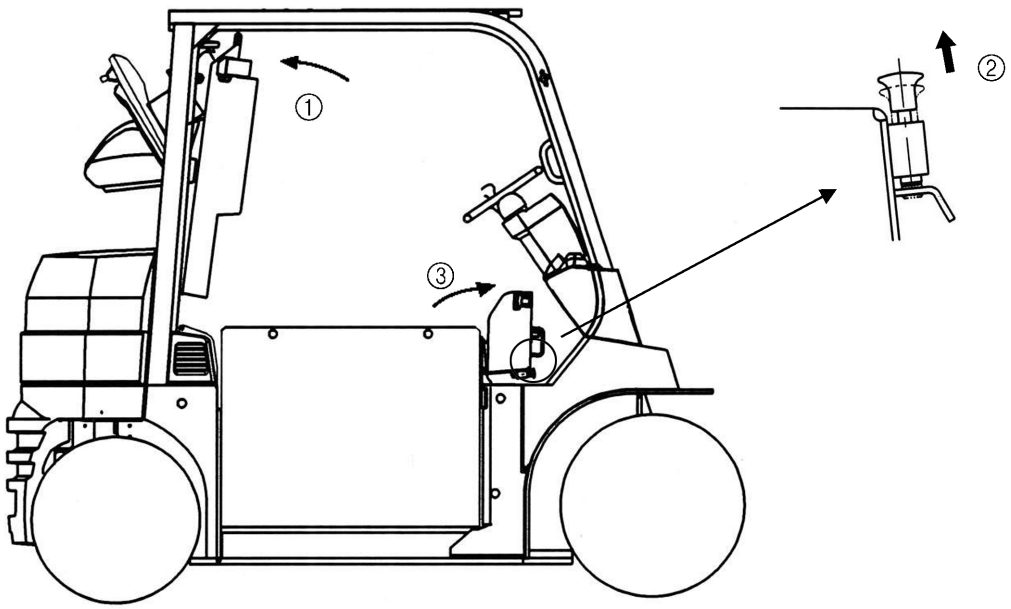

Attention:
1. **The replacing equipment is necessary to roll out.**
2. **That equipment should meet 4000N or more capacity for pushing/pulling the battery.**
3. **Apply grease on metal strip periodically in order to replace or maintain the battery smoothly.**

https://truckmanualshub.com/

HIGH HEIGHT BATTERY TYPE

Model

Available for 7FBMF16 to 50.

Structure

(7FBMF16 ~ 35)
In order to mount the OPT battery (*) , the high height battery type uses different seat stand and rear toe board from standard truck.

(*): 16 ~ 18 → DIN 43 536 3PzS420L (3PzS360)
20 ~ 25 → DIN 43 536 4PzS560L (4PzS480)
30 ~ 35 → DIN 43 536 5PzS700L (5PzS600)

Remarks: Those enclosed in a bracket ( ) shows the previous codes.

The above option battery has interchangeability with the previous model respectively.
(Refer to page 4-3 for detail.)
Main structure is as shown:

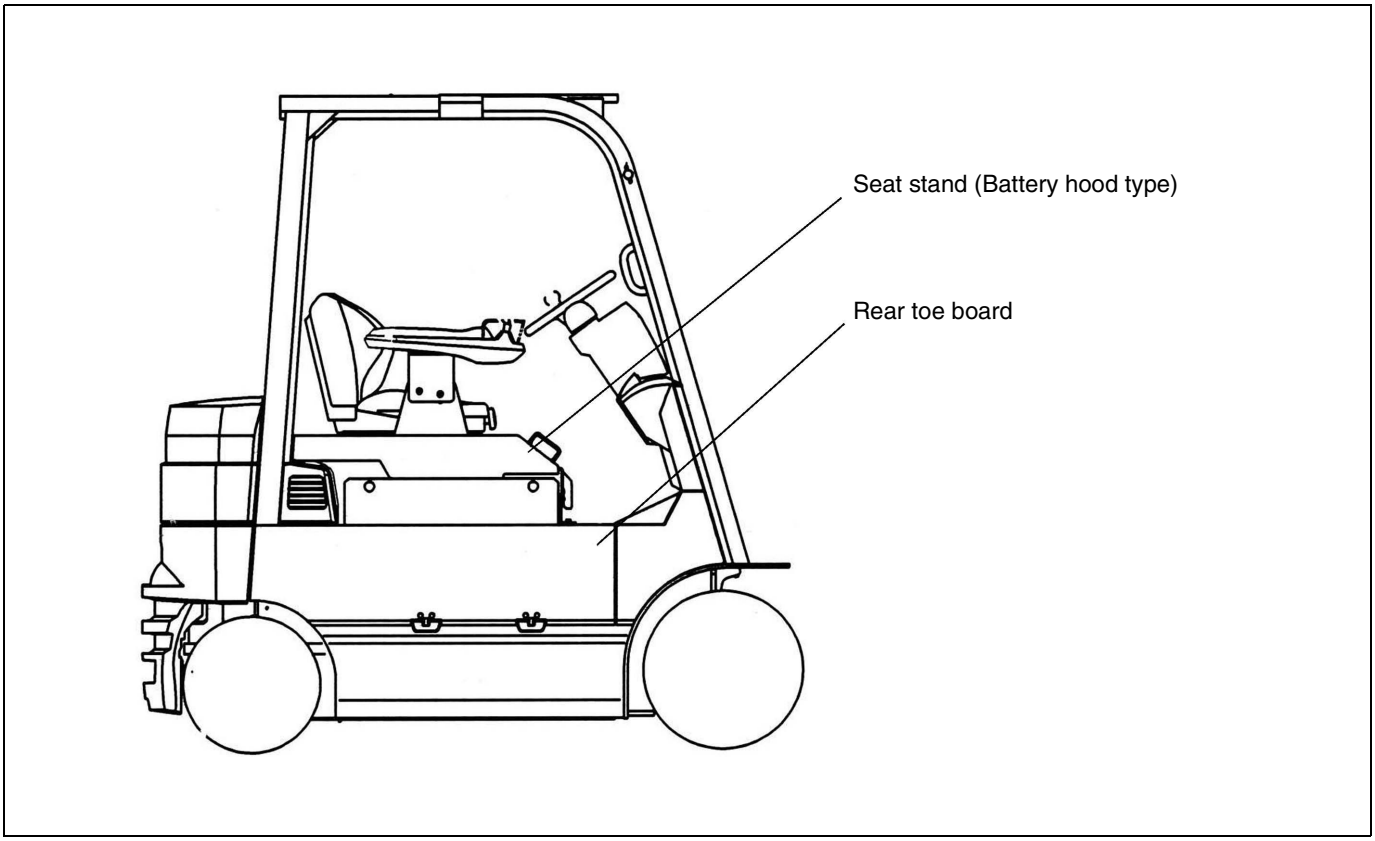

https://truckmanualshub.com/

(7FBMF40 ~ 50)
In order to mount the OPT battery (*), the high height battery type uses different seat stand and rear toe board from standard truck.
And, battery stopper is added.
(*): DIN 43 536 6PzS840L (6PzS720)
(Refer to page 4-3 for detail.)
Main structure is, as shown:

Remarks:
Enclosed in the bracket ( ) shows the previous code.

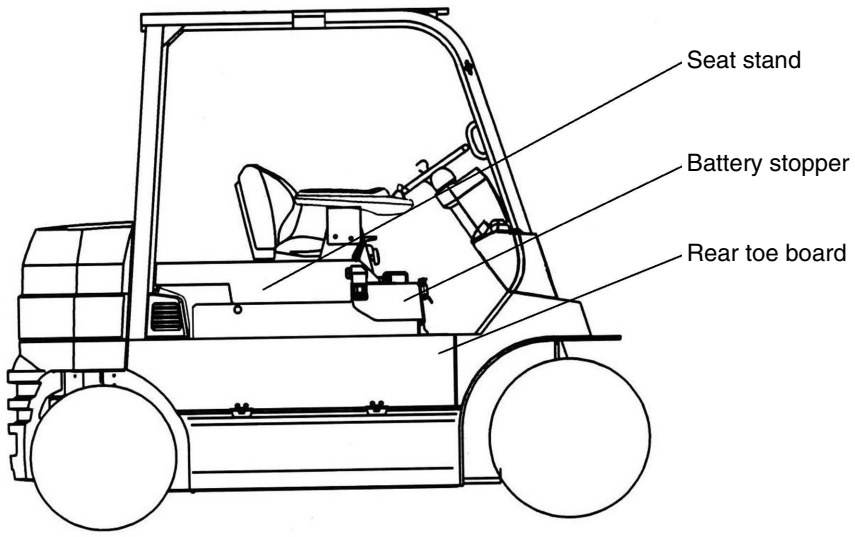

https://truckmanualshub.com/

Seat stand locking device

A locking device and a catch are provided at the front edge of the seat stand, to securely hold the seat stand in place while the truck is operated.
(7FBMF16 ~ 35)
The locking device automatically locks to the frame side when the seat stand is closed, thus making it impossible to forget to lock the hood. And the catch prevents the seat stand from rattling.

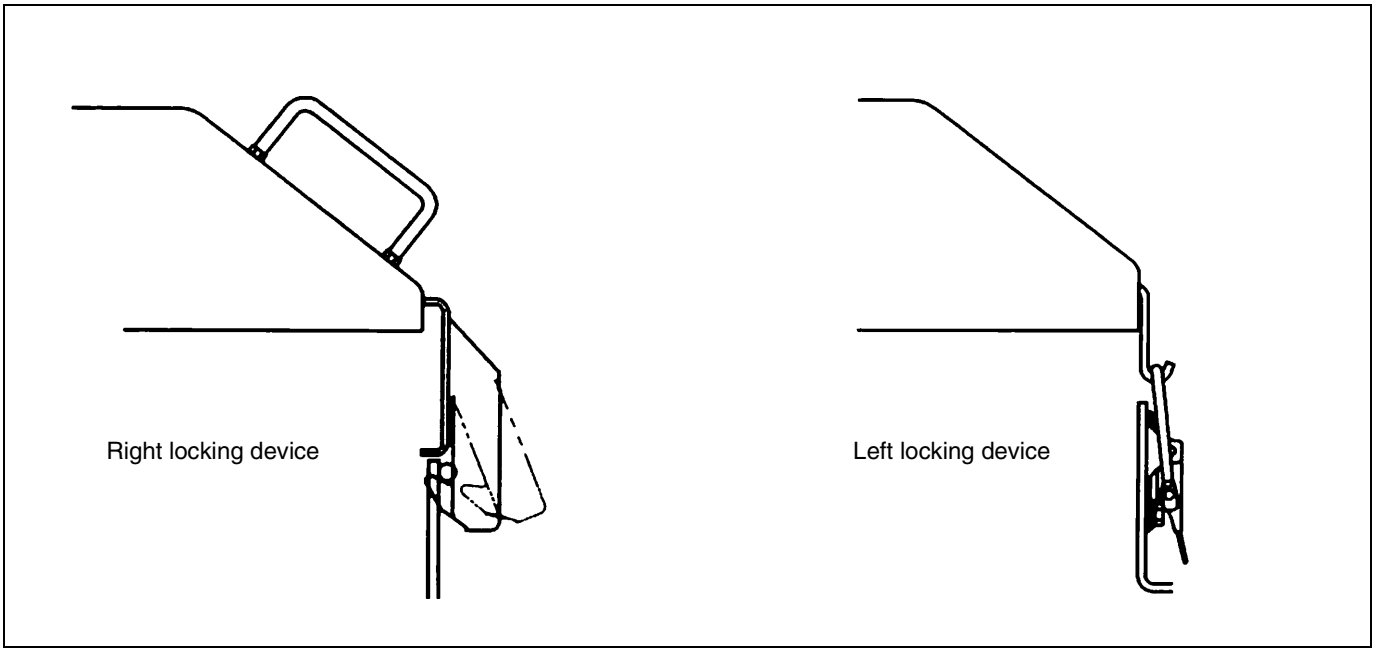

(7FBMF40 ~ 50)
At 7FBMF40 to 50, locking devices are provided both sides of seat stand at front edge. The left locking device has an additional lever to hold it unlocked so that the seat stand can be opened from the right side of the truck. Once the seat stand is opened, the left locking device returns to the ready-to-lock position with the return spring force. There is also catch lever at front center of the seat stand.

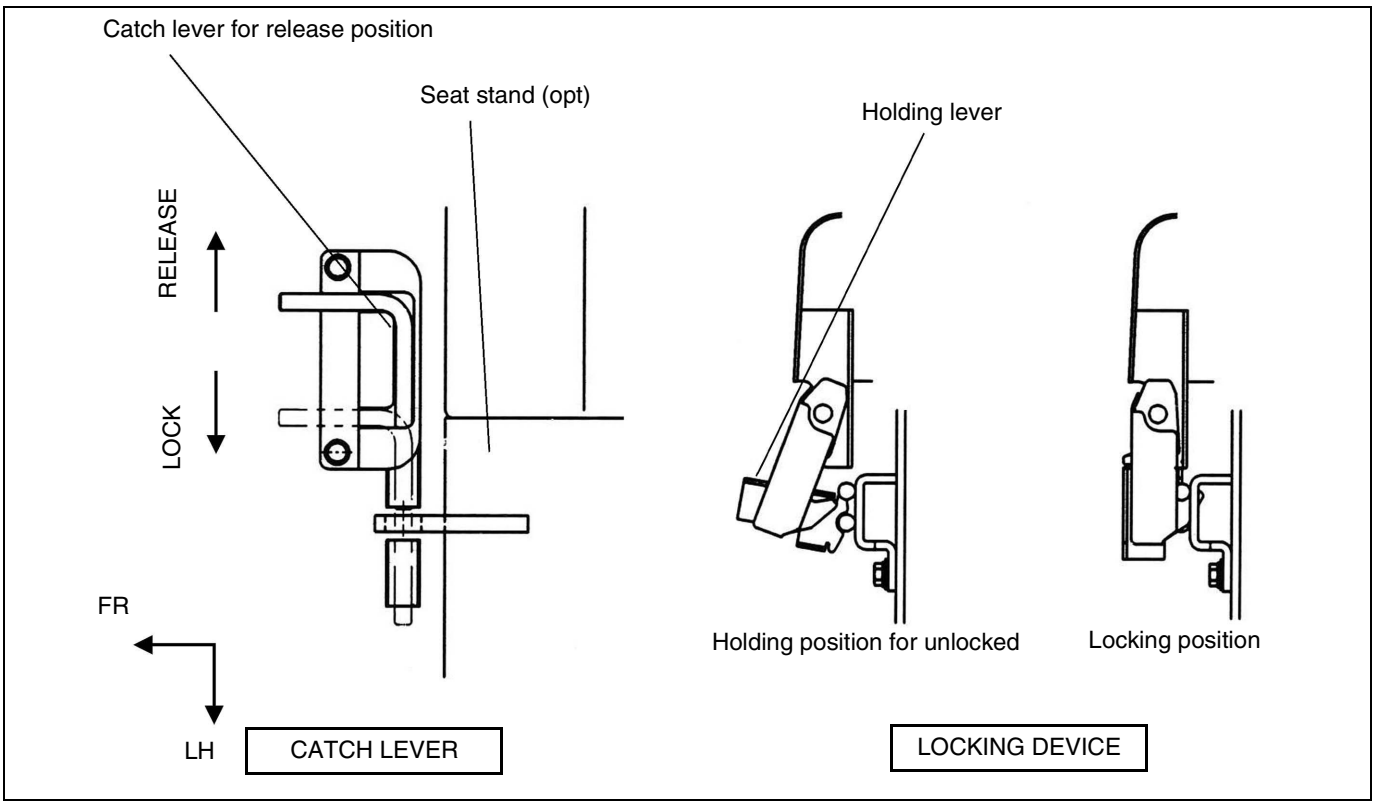

https://truckmanualshub.com/

FULLY OIL CHARGED LIFT CYLINDER

Fully oil charged lift cylinder is available for 7FBMF16 to 35 as an option.
See the table below regarding the availability of this option.

Model	Mast	Availability
7FBMF16 ~ 35	V	○
	FSV	○
	FV	— (*)
7FBMF40 ~ 50	V	×
	FSV	×
	FV	— (*)

○: Available
×: Nonavailable
—: Nonapplicable
(*) This option is not applicable to FV mast for 7FBMF16 to 35 because these masts have originally used the fully oil charged lift cylinder.

DUAL TIRES

Outline

- A dual tire specification has been selected as optional front tire of 4.0 to 5.0 ton models.
- The table below outlines the tire sizes.

4.0 ton ~ 5.0 ton Front Dual Tire

	4.0 ton ~ 5.0 ton
	All mast
Tire size	7.00 – 15
Tread (Front) mm	1280
Overall width mm	1710

Reconstruction parts

- If single tire will be replaced by dual tire, Tire (with wheel) and hub nut must be changed, and add wheel stop.

https://truckmanualshub.com/

MASTLESS

The option “without mast & fork” is newly available.

- The mast (including the mast support cap and the bushing), the lift bracket, the load backrest and the forks are not installed on the truck.
- The high pressure hose between the hydraulic oil control valve and the mast is not installed. Instead, a plug is installed on the control valve fitting there.
- The tilt cylinder installed on the truck is the same as that of the FSV mast and its backward tilt angle is 6°. The pin for fixing the tilt cylinder to the mast is not installed.
- The name plate bears the stamps of the model code, frame number, produced year, front tread, tire size, tire air pressure, voltage, battery weight and rated capacity, and fixed by rivets at the same position as the standard truck.
- The spare name plate bears the stamps of the model code, frame number, produced year, voltage, battery weight and rated capacity, is attached to the truck.

Note:

- **Install the genuine TOYOTA mast of 7FBMF series for SAS on the truck according to the repair manual.**
- **It is necessary to reset the SAS (System of Active Stability) after installing the mast.**
- **If the installed mast is V or FV mast whose max. fork height is H4000 or less, it is possible to use the tilt cylinder of 10° backward tilt angle for 7FBMF16 to 35. (In the case of 7FBMF40 to 50, the cylinder of 12° backward tilt angle.)**

https://truckmanualshub.com/

CAUTIONS IN ORDERING

Fisherman special

1. Electrical parts on the STD models such as the motors are vulnerable to salt water or chemicals when the customer deals with the loads like the fresh fish, pickles, leather, etc. on the following conditions:
   - on wet or salty road,
   - in high humidity,
   - carrying a tank filled with salt water,
   - using oxidizable solution such as hydrogen peroxide water or sodium hypochlorite
   - on road with fusion agent such as chlorination calcium, etc.

   Please recommend those customers “7FBMF Fisherman Special” specification.
2. Please pay attention to the types of industry concerned as the marine products processing industry, pickle shop, tanned hide business and chemical fertilizer business, etc., regarding the salt effect, and chemical effect.

Caution in modification

1. Contents
   This forklift is installed with high-precision electronic devices. When electric accessories other than those specified by the manufacturer are to be installed, therefore sufficient attention should be paid to avoid adverse influence on their functioning.
2. Caution
   Before selecting and installing electric accessories other than those specified by the manufacturer, make sure that its operation does not involve any abnormal surge* or noise and also pay attention to the installation method.
   If it is unknown whether or not any surge is generated, consult with the accessory manufacturer.
   * Surge is momentary application of a high voltage to a part of the circuit due to a sudden current variation in an electric circuit.
3. Other general advice supplementing the above caution
   (1) The caution for each type of electric accessory is as follows:
   ① Accessory such as a motor or solenoid with a built-in inductive load
   - Connect a circulating diode to both ends of the inductive load.
   - Connect a surge absorber to both ends of the ON/OFF switch.

   ② Accessory such as buzzer or chime that generates sound.
   - Use an electronic buzzer instead of a contact type buzzer or chime.

   ③ Accessory such as an igniter containing a high-voltage discharge circuit.
   - Since the accessory is very likely to generate noise, check no noise generation before installation.

   (2) Cautions concerning the wiring are as follows:
   ① Lay the harness for the accessory apart from the vehicle harnesses as far as possible.
   ② Do not branch power or signal line from a part of a vehicle harness. Connect the power line, for example, from option connector terminals or directly from the vehicle battery terminals.
   ③ If possible, the power supply to the accessory should be prepared independently.

   (3) Others
   ① Use static strap with non-marking tire or smooth non marking tire.

https://truckmanualshub.com/

Cautions in handling

1. Do not blindly rely on the active control rear stabilizer.
   (Refer to the page 11-7.)
2. Do not blindly rely on the active mast front tilt angle control.
   (Refer to the page 11-11, 11-12.)
3. Quit to turn off the PKB key switch unnecessarily, because the vehicle stops sharply in the case that turned off the PKB switch during traveling.
   (Refer to the page 5-14.)
4. In the case that the vehicle is hauled in the emergency, remove the plug of the parking brake cover and cancel the brake mechanically with the tool of the exclusive use.
   (Refer to the page 5-14.)
5. It may depend on the hard working conditions where the performance of the vehicle should be temporarily restricted in order to protect the controller or the motor from overheating. In other words, if the temperature of the controllers or the motors which are monitored by the sensors built in them exceeds the prescribed level, the controller command to limit the current supply for the motor. This limitation for the protection is deemed as normal, but warning is indicated on the monitoring display, please make the truck rested for a while until the warning disappears.
6. Regarding the interchangeability of the battery on the new model with the previous models, dimensions of battery case for previous model comply with high height battery type option.
   But, the battery connector and cable have been changed (160A, 35sq → 320A, 50sq). It is necessary to change them, if the battery for previous model is used.

https://truckmanualshub.com/

ATTACHMENT LIST

Attachment / Truck model	Side shifter					
	E811	E811A	E811B	E911	E911A	E911B
	Integrated	Integrated +A430	Integrated +A450	Hooked on	Hooked on+A430	Hooked on+A450
7FBMF16	○	○	○	○	○	○
7FBMF18	○	○	○	○	○	○
7FBMF20	○	○	○	○	○	○
7FBMF25	○	○	○	○	○	○
7FBMF30	○	○	○	○	○	○
7FBMF35	○	○	○	○	○	○
7FBMF40	—	—	—	○	○	○
7FBMF45	—	—	—	○	○	○
7FBMF50	—	—	—	○	○	○

○: Available

Note: Center termination is included in the side shifter.

E9: Hooked on sideshifter (Cascade)

Outline

- Hooked on sideshifter (Cascade) is provided.
- The basic structure of the E9 is the same as that of the previous model.
- The E9 attachment can be attached to all the mast types.
- And width of sideshifter is equal to that of the fork bar on the corresponding truck model.

(Front view of the hooked on type sideshifter)

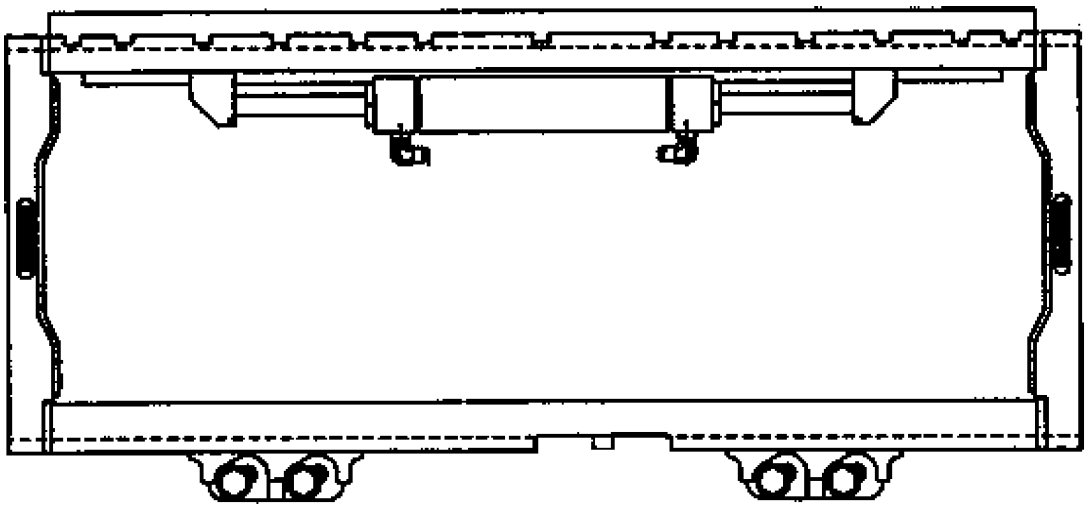

https://truckmanualshub.com/

Specification

7FBMF16,18	Fork bar width	mm	920		
	Assembly weight	kg	50.3		
	Effective thickness	mm	59		
	Max. sideshift	mm	200	◎: STD in E9	
	Series		◎	○: OPT	
7FBMF20,25	Fork bar width	mm	1020	1170	1470
	Assembly weight	kg	53.5	59.0	88.3
	Effective thickness	mm	59	←	←
	Max. sideshift	mm	200	←	←
	Series		◎	○	○
7FBMF30	Fork bar width	mm	1070	1170	1470
	Assembly weight	kg	98	106	140
	Effective thickness	mm	63	←	←
	Max. sideshift	mm	200	←	←
	Series		◎	○	○
7FBMF35	Fork bar width	mm	1070	1170	1470
	Assembly weight	kg	139	149	192
	Effective thickness	mm	78	←	←
	Max. sideshift	mm	200	←	←
	Series		◎	○	○
7FBMF40,45,50	Fork bar width	mm		1170	1470
	Assembly weight	kg		149	192
	Effective thickness	mm		78	←
	Max. sideshift	mm		200	←
	Series			◎	○

https://truckmanualshub.com/

Others

1. Fork & backrest
   Fork & backrest are the same as those of the standard truck models.
   So series options of the standard truck models are available.
2. A4 piping
   The E9 attachments including the A4 piping are as shown:

E9-code	A4-type
E911	A410
E911A	A430
E911B	A450

3. Control lever arrangement
   Control lever arrangement is the same as that of the previous model.

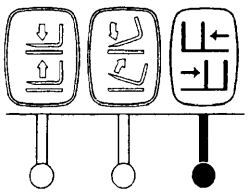

Sideshift control lever

E8: Integral sideshifter

Outline

- Sideshifter integrated with lift bracket is provided.
- The basic structure of the E8 is the same as that of the previous model.
- The E8 attachment can be attached to all the mast type.
- The load capacity and the load center distance are the same as those of the STD model.

(Rear view of the integral sideshifter)

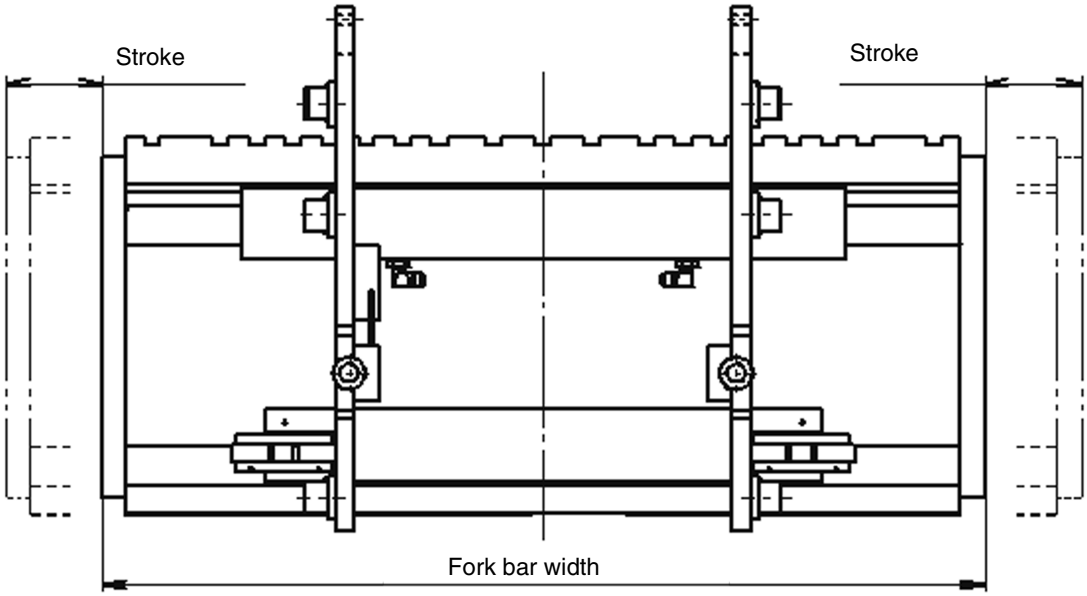

https://truckmanualshub.com/

Specification

7FBMF16,18	Fork bar width	mm	920		
	Max. sideshift	mm	200		
	Series		◎		
7FBMF20,25	Fork bar width	mm	1020	1170	1470
	Max. sideshift	mm	200	←	←
	Series		◎	○	○
7FBMF30	Fork bar width	mm	1070	1170	1470
	Max. sideshift	mm	200	←	←
	Series		◎	○	○
7FBMF35	Fork bar width	mm	1070	1170	1470
	Max. sideshift	mm	200	←	←
	Series		◎	○	○

◎: STD in E8
○: OPT (Option)

Others

1. Fork & backrest
   Fork & backrest are the same as those of the standard vehicle.
   So series options of the standard vehicle are available.
2. A4 piping
   The E8 attachment includes the A4 piping are as shown:

E8-code	A4-type
E811	A410
E811A	A430
E811B	A450

3. Tire chain reconstruction
   The option of “tire chain reconstruction” is not unavailable with the integral side shift.
4. Control lever arrangement
   Control lever arrangement is the same as that of the previous model.

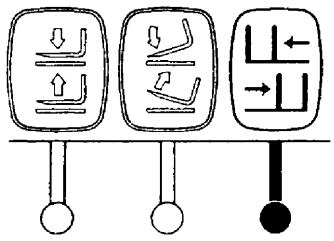

Sideshift control lever

https://truckmanualshub.com/

WIRING DIAGRAM

Page

WIRING DIAGRAM (1.6 ~ 3.5 TON MODEL)..... 13-2

WIRING DIAGRAM (4.0 ~ 5.0 TON MODEL)..... 13-3

https://truckmanualshub.com/

7FBMF 16-35

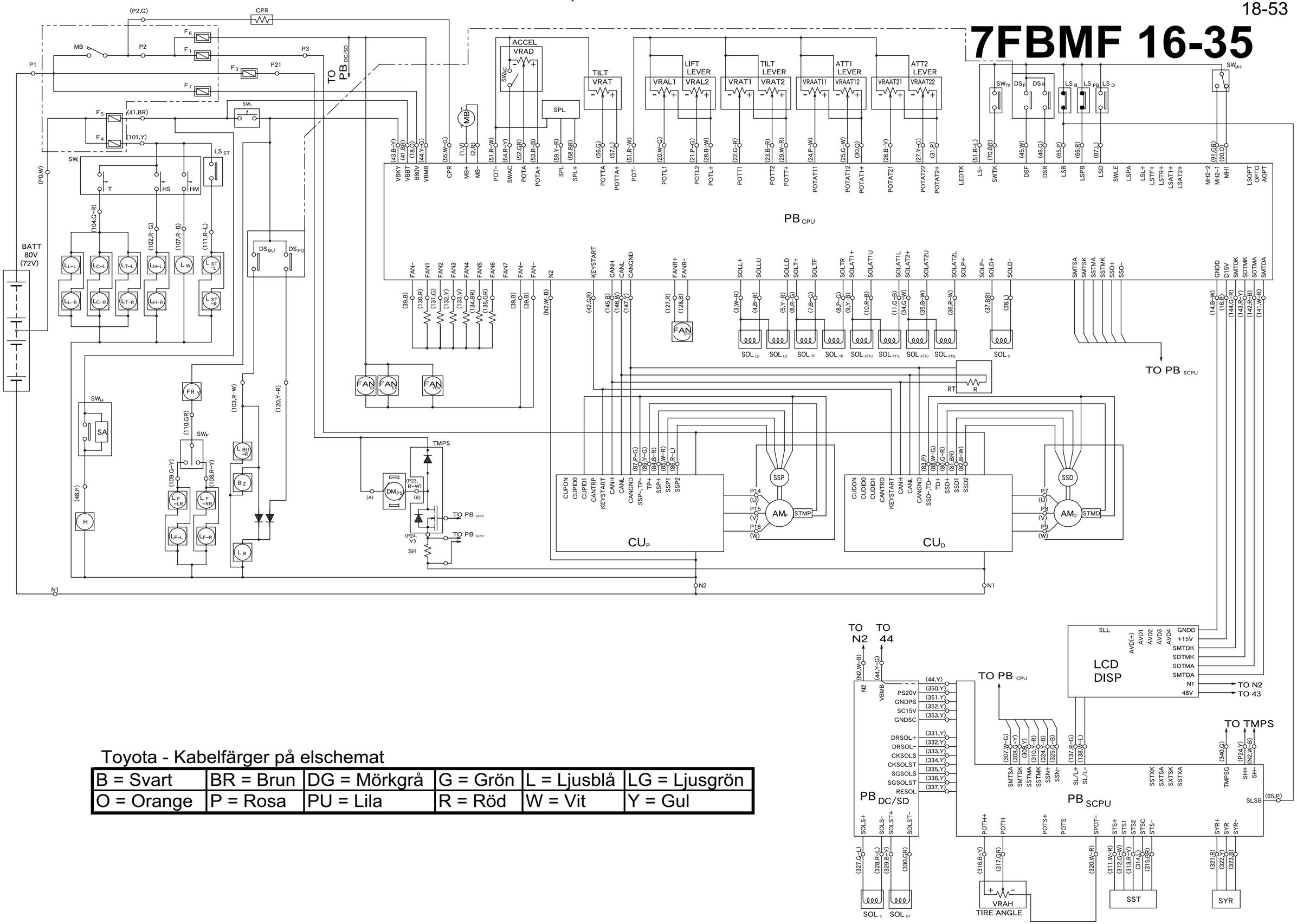

Toyota - Kabelfärger på elschemat

B = Svart	BR = Brun	DG = Mörkgrå	G = Grön	L = Ljusblå	LG = Ljusgrön
O = Orange	P = Rosa	PU = Lila	R = Röd	W = Vit	Y = Gul

https://truckmanualshub.com/

7FBMF 40-50

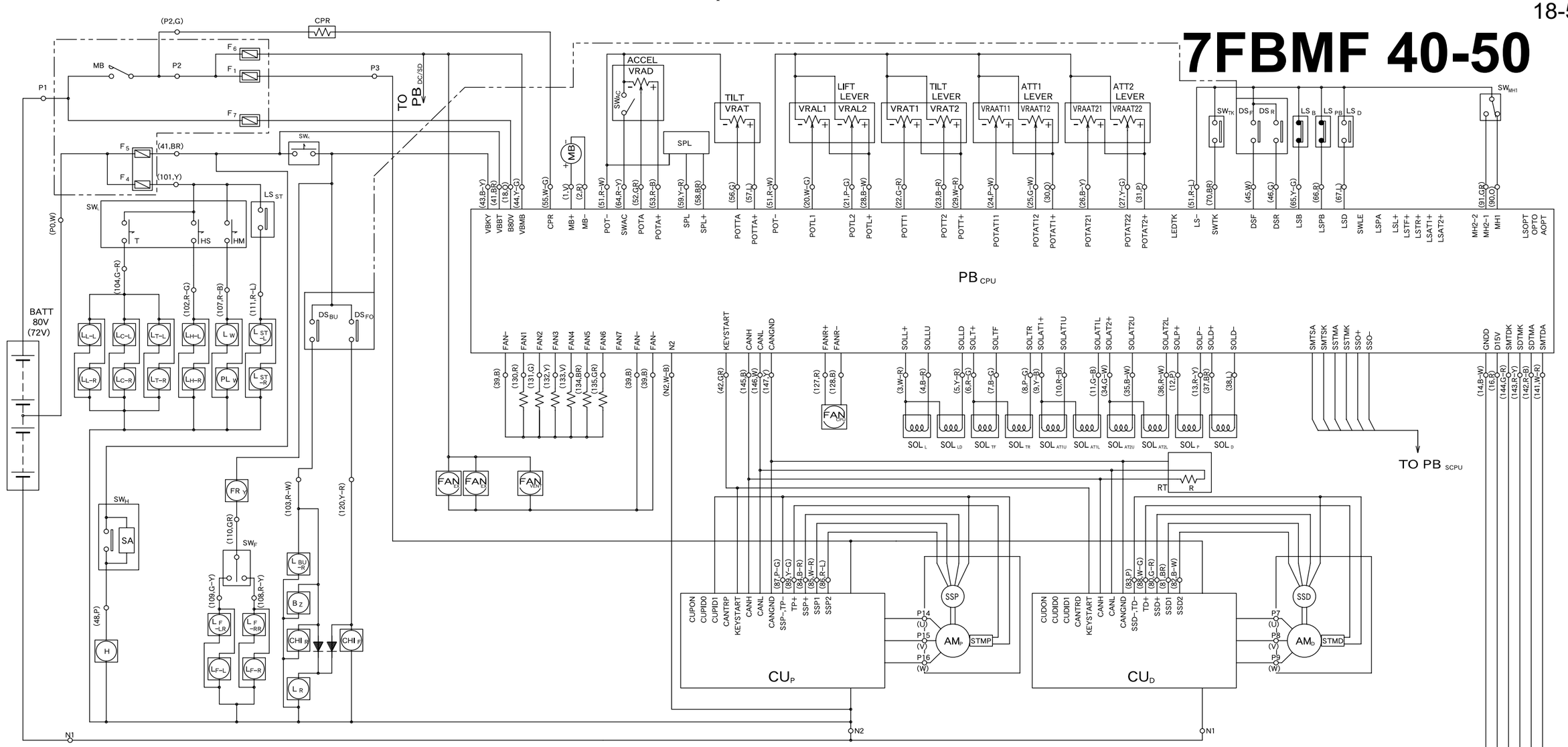

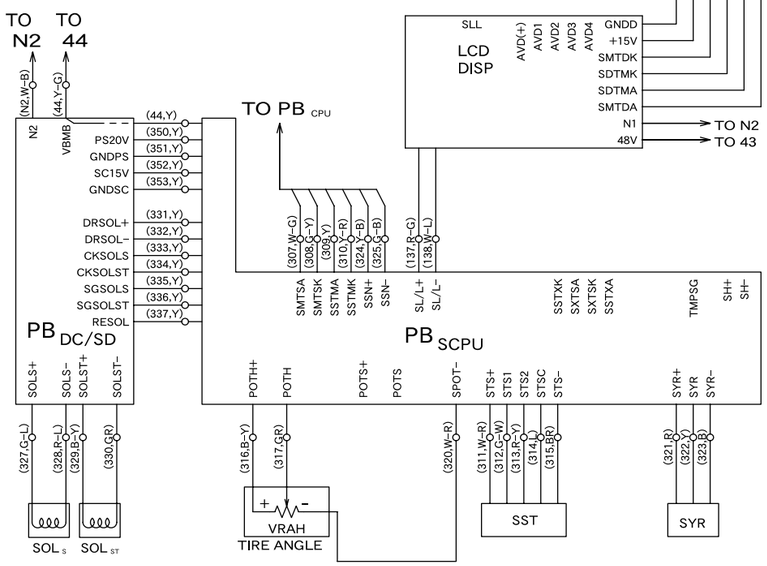

Toyota - Kabelfärger på elschemat

B = Svart	BR = Brun	DG = Mörkgrå	G = Grön	L = Ljusblå	LG = Ljusgrön
O = Orange	P = Rosa	PU = Lila	R = Röd	W = Vit	Y = Gul