https://truckmanualshub.com/

Haulotte GROUP

CE

OPERATING AND MAINTENANCE MANUAL

SELF-PROPELLED PLATFORM HA16PX / HA18PX

242 032 0720 - E 11.06 GB

ISO 9001 V2000 Haulotte GROUP

WWW.HAULOTTE.COM

Haulotte GROUP
Pinguely-Haulotte - La Péronnière - BP 9 - 42152 l'Horme - France - Tel : +33 (0)4 77 29 24 24 - Fax : +33 (0)4 77 29 43 95 - email : haulotte@haulotte.com

https://truckmanualshub.com/

https://truckmanualshub.com/

Distribué par / *Distributed by/ Distribuito da*

Haulotte France
Tél / *Phone* +33 (0)4 72 88 05 70
Fax / *Fax* +33 (0)4 72 88 01 43

Centre Mondial Pièces de Rechange
Spare Parts International Centre
Tél / *Phone* +33 (0)4 77 29 24 51
Fax / *Fax* +33 (0)4 77 29 98 88

Haulotte Hubarbeitsbühnen
Tél / *Phone* + 49 76 33 806 920
Fax / *Fax* + 49 76 33 806 82 18

Haulotte Portugal
Tél / *Phone* + 351 21 955 98 10
Fax / *Fax* + 351 21 995 98 19

Haulotte UK
Tél / *Phone* + 44 (0) 1952 292753
Fax / *Fax* + 44 (0) 1952 292758

Haulotte U.S. Inc.
Main tool free 1-877-HAULOTTE
Service tool free 1-877-HAULOT-S

Haulotte Singapore Pte Ltd
Tél / *Phone* + 65 6536 3989
Fax / *Fax* + 65 6536 3969

Haulotte Netherlands BV
Tél / *Phone* + 31 162 670 707
Fax / *Fax* + 31 162 670 710

Haulotte Australia PTY Ltd
Tél / *Phone* + 61 3 9706 6787
Fax / *Fax* + 61 3 9706 6797

Haulotte Italia
Tél / *Phone* + 39 05 17 80 813
Fax / *Fax* + 39 05 16 05 33 28

Haulotte Do Brazil
Tél / *Phone* + 55 11 3026 9177
Fax / *Fax* + 55 3026 9178

Haulotte Scandinavia AB u.b.
Tél / *Phone* + 46 31 744 32 90
Fax / *Fax* + 46 31 744 32 99

Haulotte Iberica - Madrid
Tél / *Phone* + 34 91 656 97 77
Fax / *Fax* + 34 91 656 97 81

Haulotte Iberica - Sevilla
Tél / *Phone* + 34 95 493 44 75
Fax / *Fax* + 34 95 463 69 44

https://truckmanualshub.com/

https://truckmanualshub.com/

Why use only Haulotte original spare-parts ?

1. RECALLING THE EEC DECLARATION OF CONFORMITY IN QUESTION

Components, substitutions, or modifications other than the ones recommended by **Haulotte** may recall in question the initial security conditions of our **Haulotte** equipment. The person who would have intervened for any operation of this kind will take responsibility and recall in question the EEC marking validity granted by **Haulotte**. The EEC declaration will become null and void and **Haulotte** will disclaim regulation responsibility.

2. END OF THE WARRANTY

The contractual warranty offered by **Haulotte** for its equipment will no longer be applied after spare-parts other than original ones are used.

3. PUBLIC AND PENAL LIABILITY

The manufacture and unfair competition of fake spare-parts will be sentenced by public and penal law. The usage of fake spare-parts will invoke the civil and penal liability of the manufacturer, of the retailer, and, in some cases, of the person who used the fake spare-parts.
Unfair competition invokes the civil liability of the manufacturer and the retailer of a “slavish copy” which, taking unjustified advantage of this operation, distorts the normal rules of competition and creates a “parasitism” act by diverting efforts of design, perfection, research of best suitability, and the know-how of **Haulotte**.

FOR YOUR SECURITY, REQUIRE HAULOTTE ORIGINAL SPARE-PARTS

4. QUALITY

Using **Haulotte** original spare-parts means guarantee of :

- High quality partsl
- The latest technological evolution
- Perfect security
- Peak performance
- The best service life of your **Haulotte** equipment
- The **Haulotte** warranty
- **Haulotte** technicians' and repair agents' technical support

5. AVAILABILITY

Using Haulotte original spare-parts allows you to take advantage of 40 000 references available in our permanent stock and a 98% service rate.

WHY NOT TAKE ADVANTAGE ?

https://truckmanualshub.com/

GENERAL

You have just taken delivery of your mobile elevating work platform

It will give you complete satisfaction if you follow the operating and maintenance instructions exactly.

The purpose of this instruction manual is to help you in this.

We stress the importance:
- of complying with the safety instructions relating to the machine itself, its use and its environment,
- of using it within the limits of its performances,
- of proper maintenance upon which its service life depends.

During and beyond the warranty period, our After-Sales Department is at your disposal for any service you might need.

Contact in this case our Local Agent or our Factory After-Sales Department, specifying the exact type of machine and its serial number.

When ordering consumables or spares, use this documentation, together with the «Spares» catalogue so as to receive original parts, the only guarantee of interchangeability and perfect operation.

This manual is supplied with the machine and is included on the delivery note.

REMINDER: You are reminded that our machines comply with the provisions of the «Machines Directive» 89/392/EEC of June 14th 1989 as amended by the directives 91/368/EEC of June 21st 1991, 93/44/EEC of June 14th 1993, 93/68/EEC of July 22nd 1993 and 89/336/EEC of May 3rd 1989, directive 2000/14/CE and directive EMC/89/336/CE.

Caution!
The technical data contained in this manual cannot involve our responsibility and we reserve the right to proceed with improvements or modifications without amending this manual.

CONTENTS

1 - GENERAL RECOMMENDATIONS - SAFETY 1

1.1 - GENERAL WARNING 1
1.1.1 - Manual 1
1.1.2 - Labels 1
1.1.3 - Safety 1

1.2 - GENERAL SAFETY INSTRUCTIONS 2
1.2.1 - Operators 2
1.2.2 - Work environment 2
1.2.3 - Using the machine 2

1.3 - RESIDUAL RISKS 4
1.3.1 - Risks of jerky movements and tipping over 4
1.3.2 - Electrical risk 4
1.3.3 - Risk of explosion or burning 4
1.3.4 - Risks of collision 4

1.4 - INSPECTIONS 5
1.4.1 - Periodic inspections 5
1.4.2 - Examination of machine suitability 5
1.4.3 - State of conservation 5

1.5 - REPAIRS AND ADJUSTMENTS 6

1.6 - VERIFICATIONS WHEN RETURNING TO SERVICE 6

1.7 - BEAUFORT SCALE 6

1.8 - MINIMAL DISTANCES OF SAFETY 7

2 - PRESENTATION 9

2.1 - IDENTIFICATION 9

2.2 - MAIN COMPONENTS 10

2.3 - WORKING AREA 11
2.3.1 - HA 16P working area 11
2.3.2 - HA 18P working area 12

2.4 - TECHNICAL CHARACTERISTICS 13
2.4.1 - HA 16PX TECHNICAL CHARACTERISTICS 13
2.4.2 - HA 18PX TECHNICAL CHARACTERISTICS 14

2.5 - DIMENSIONS 16

2.5.1 - HA 16PX dimensions 16
2.5.2 - HA 18PX dimensions 17

2.6 - LABELLING 18
2.6.1 - Position of labels 18
2.6.2 - Common labels 21
2.6.3 - Labels specific to models 23
2.6.4 - Labels specific to options 23
2.6.5 - Labels specific to Holland 24
2.6.6 - Labels specific to Australia 24

3 - OPERATING PRINCIPLE 25

3.1 - HYDRAULIC CIRCUIT 25
3.1.1 - Movement control 25
3.1.2 - Actuators 25
3.1.3 - Manual emergency system 26
3.1.4 - Emergency and rescue 26

3.2 - ELECTRICAL CIRCUIT 26
3.2.1 - Control of the load in the platform 26
3.2.2 - Tilt check 26
3.2.3 - High travel speed 27
3.2.4 - Hour counter 27

4 - OPERATION 29

4.1 - OPERATING SAFETY MECHANISMS 29
4.1.1 - Travel (controlled from "platform" station) 29
4.1.2 - Emergency or rescue procedure 29

4.2 - UNLOADING - LOADING - MOVING THE MACHINE - PRECAUTIONS 30
4.2.1 - Unloading by lifting 30
4.2.2 - Unloading using ramps 31
4.2.3 - Loading 31
4.2.4 - Moving the machine 31
4.2.5 - Filling the fuel tank 32

4.3 - OPERATIONS PRIOR TO FIRST USE OF THE MACHINE 33
4.3.1 - "Turntable" control panel 33
4.3.2 - "Platform" control panel 34
4.3.3 - Checks before using the machine 34

4.4 - STARTING WORK 36
4.4.1 - Operations from the ground 36
4.4.2 - Operations from the platform (Photo 3, page 34) 37

https://truckmanualshub.com/

4.5 - BUILT-IN GENERATOR (OPTION) 38

4.6 - EMERGENCY OPERATION WITH THE STANDBY ELECTROPUMP UNIT 39

4.7 - RESCUE OPERATION 39

4.7 - UNCOUPLING 40

5 - MAINTENANCE 41

5.1 - GENERAL RECOMMENDATIONS 41

5.2 - MAINTENANCE PLAN 42

5.3 - OPERATIONS 44

5.3.1 - Summary table 44

5.3.2 - Tightening torques of the screws of crowns of orientation 45

5.3.3 - Operating Instructions 46

5.3.4 - List of consumables 47

6 - OPERATING INCIDENTS 49

7 - SAFETY SYSTEMS 53

7.1 - FUNCTION OF RELAYS AND FUSES IN THE TURNTABLE BOX 53

7.2 - FUNCTION OF SAFETY CONTACTS 53

8 - WIRING DIAGRAMS 55

8.1 - DIAGRAM E 598 - FOLIO 01/05 55

9 - HYDRAULIC DIAGRAMS 61

9.1 - DIAGRAM HA16/18PX REFERENCE P22513 61

https://truckmanualshub.com/

1 - GENERAL RECOMMENDATIONS - SAFETY

1.1 - GENERAL WARNING

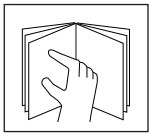

1.1.1 - Manual

This manual is designed to familiarise the operator with HAULOTTE self-propelled platforms in order to ensure efficient and safe use. However, it cannot replace the basic training required by any user of site equipment.

The site manager is bound to inform the operators of the instructions contained in the manual. He is also responsible for applying the «user regulations» in force in the country of use.

Before using the machine, it is essential to understand all these instructions in order to ensure safe and efficient operation.

This manual must be kept available for all operators. Additional copies can be supplied by the manufacturer on request

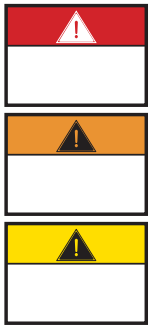

1.1.2 - Labels

Potential dangers and machine instructions are indicated on labels and plates. All instructions on such plates must be read.

All labels conform to the following colour code:

- Red indicates a potentially fatal danger.
- Orange indicates a danger of causing serious injury.
- Yellow indicates a danger that may cause material damage or slight injury.

The site manager must ensure that these labels are in good condition and remain legible. Additional copies can be supplied by the manufacturer on request.

1.1.3 - Safety

Ensure that any persons entrusted with the machine are fit to meet the safety requirements that its use imposes.

Avoid any working method that may jeopardise safety. Any use not compliant with the instructions may cause risk and damage to persons and property.

Caution !

To attract the reader's attention instructions are signalled by this sign.

This manual must be kept by the user throughout the machine's service life, including in the case of loan, lease and resale.

Ensure that all plates or labels relative to safety and hazards are complete and legible.

1.2 - GENERAL SAFETY INSTRUCTIONS

1.2.1 - Operators

Operators must be aged over 18, and hold an operating license in the country of use issued by their appropriate autority to prove that they are apt to operate the machine.

Caution !
Only trained operators can use Haulotte self-propelled platforms.

There must always be one person at ground level who is familiar with the emergency control to:

- Take fast action if necessary.
- Take over the controls in case of accident or malfunction.
- Monitor and prevent movement of vehicles and people near the platform.
- Guide the platform operator if required.

1.2.2 - Work environment

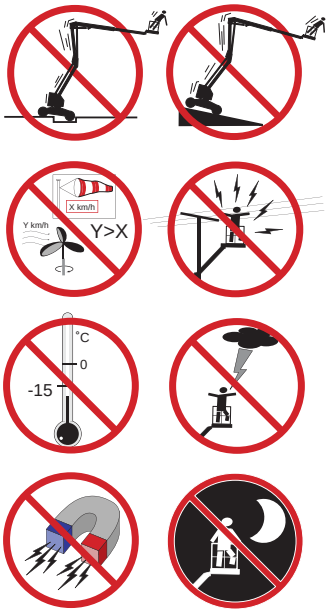

Never use the machine:

- On ground that is soft, unstable, congested.
- On ground that has a slope greater than permissible limit.
- In winds greater than the permissible limit. If used outside, use an anemometer to ensure that the wind speed does not exceed the permissible limit (see Chap 1.7, page 6).
- Near power lines (check minimum safe approach distances according to voltage carried) (see Chap 1.8, page 7).
- In temperatures less than -15°C (especially in refrigerated chambers). Consult us if it is necessary to work below -15°C.
- In explosive atmospheres.
- In poorly-ventilated areas, since the exhaust fumes are toxic.
- During storms (risk of lightning).
- In the dark, unless the optional floodlight is fitted.
- In the presence of intense electromagnetic fields (radar, moving and high currents).

DRIVING ON PUBLIC ROADS IS PROHIBITED.

1.2.3 - Using the machine

In normal service (i.e. operating from the platform), the platform/turntable control select key must be removed and kept at ground level by a person who is present and trained in rescue/emergency assistance manoeuvres.

Do not use the machine:

- with a load greater than allowed load,
- if wind speed exceeds the maximum
- with more than maximum authorised number of occupants in platform,
- with a side load in the platform greater than permissible limit.

https://truckmanualshub.com/

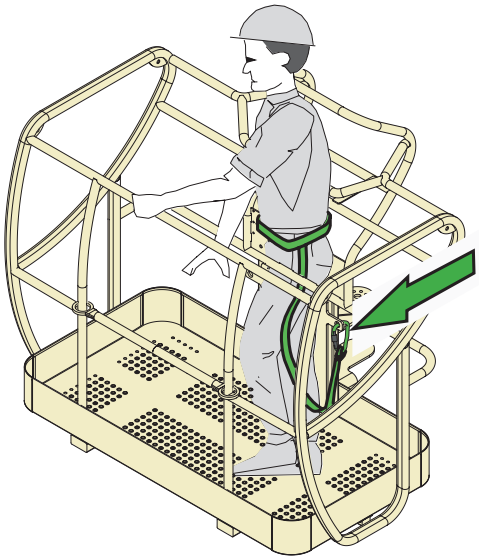

To reduce the risks of **serious falls, operators must respect the following instructions**:

- Hold the guardrail firmly when lifting or driving the platform.
- Remove any traces of oil or grease from the platform steps, floor or guardrails.
- Wear personal protective equipment suited to working conditions and conform to local regulations, particularly when working in hazardous areas.
- Anyone working onboard the platform must wear a safety harness which should be attached to the usual fixing point with a strap. Attach one strap only per fixing point.
- Never disable the limit switches of the safety devices.
- The contact with fixed or mobile obstacles can cause the premature deterioration of the structure, and involve the rupture of certain safety members of the machine
- Do not increase the platform operating height by means of ladders or other accessories.
- Never use the guardrails to climb into or out of the platform (use the steps provided).
- Never climb on the guardrails when the platform is up.
- Avoid driving the machine at high speed in narrow or congested areas.
- Never use the machine without putting in place the platform safety bar or closing the safety gate.
- Never climb on the covers.

Caution !

Never use the platform as a crane, hoist or lift.
Never use the machine to pull or tow.
Never use the boom as a ram or thruster or to lift the wheels.

To reduce the risks of tipping over, operators **must follow these instructions**:

- Never disable the limit switches of the safety devices.
- Never move the control handles from one direction to the other without stopping in the «O» position. (To stop when travelling, gradually move the handle to «O», keeping your foot down on the pedal.).
- Do not exceed the maximum load or the number of occupants allowed in the platform.
- Spread the load and if possible place in the centre of the platform.
- Check that the ground resists the pressure and load per wheel.
- The contact with fixed or mobile obstacles can cause the premature deterioration of the structure, and involve the rupture of certain safety members of the machine
- Do not drive the platform at high speed in narrow or congested areas.
- Do not drive the platform in reverse gear (poor visibility).
- Do not use the machine with a congested platform.
- Do not use the machine with equipment or objects hanging from the guardrails or boom.
- Do not use the machine with items liable to increase the wind load (e.g. panels).
- Never carry out maintenance on the machine with the platform raised, without first installing the required safety provisions (overhead crane, crane).
- Perform the daily checks and monitor the machine's good working order during periods of use.
- Protect the machine from any uncontrolled intervention when it is not in operation.

NOTE : Do not tow the unit. (The equipement is not designed for towing. Transport of the unit should be carried out using a vehicle built for this purpose).

1.3 - RESIDUAL RISKS

1.3.1 - Risks of jerky movements and tipping over

Caution !
The direction of travel can be reversed after a 180° turntable rotation. Take account of the colour of the arrows on the chassis compared with the direction of travel (green = forward, red = reverse)
Thus, moving the manipulator in the direction of the green arrow on the control panel will move the machine according to the direction indicated by the green arrow on the chassis. Similarly, moving a manipulator in the direction of the red arrow on the control panel, will move the machine in the direction of the red arrow on the chassis

Risks of jerky movement and tipping over are high in the following situations:
- Sudden action on the controls.
- Overloading of the platform.
- Uneven ground (Be careful during thaw periods in winter).
- Gusts of wind.
- Contact with an obstacle on the ground or at a height.
- Working on platforms, pavements, etc.

Allow sufficient stopping distances:
- 3 meters at high speed,
- 1 meter at low speed.

Allow sufficient stopping distances: 3 metres at high speed and 1 metre at low speed.

Do not alter or override any components connected in any way to the machine's safety or stability.

Do not place or fasten a load so that it overhangs the machine's parts.

Do not touch adjacent structures with the elevator arm.

1.3.2 - Electrical risk

Caution !
If the machine has a 220 V 16A max. plug, the extension must be connected to a mains socket protected by a 30 mA differential circuit breaker.

Electrical risks are high in the following situations:
- Contact with a live line (check safety distances before operation near electricity lines) (see Chap 1.8, page 7).
- Use during storms.

1.3.3 - Risk of explosion or burning

The risks of explosion or burning are high in the following situations:
- Working in explosive or inflammable atmosphere.
- Filling the fuel tank near naked flames.
- Contact with the hot parts of the motor.
- Use of a machine causes hydraulic leakage.

1.3.4 - Risks of collision

- Risk of crushing people in the machine operation zone (when travelling or manoeuvring equipment).
- The operator must assess the risks above him before using the machine.
- Pay attention to the position of the arms during turntable rotation.
- Adapt movement speed to conditions related to the ground, traffic, slope and movement of people, or any other factor that may cause a collision.
- When driving down the ramp of a truck, ensure sufficient space is available for safe unloading.
- Check brake pad wear regularly to avoid all risk of collision.
- Always use a winch line connected to the unit when loading and unloading off tilt tray vehicules.

https://truckmanualshub.com/

1.4 - INSPECTIONS

Comply with the national regulations in force in the country of machine use.

For AUSTRALIA: ie.AS2550.10.

For FRANCE: Order dated 1st March 2004 + circular DRT 93 dated 22 September 1993 which specify:

1.4.1 - Periodic inspections

The machine must be inspected every 6 months in order to detect any defects liable to cause an accident.

These inspections are performed by an organisation or personnel specially designated by the site manager and under his responsibility (whether or not they belong to the company) Articles R 233-5 and R 233-11 of the French Labour Code.

The results of these inspections are recorded in a safety register kept by the site manager and constantly available to the labour inspector and the site safety committee (if one exists) and the list of specially designated personnel (Article R 233-5 of the French Labour Code).

Moreover, before each use, check the following:

- the operator's manual is in the storage compartment on the platform,
- the stickers are placed according to the section concerning «Labels and their positions»,
- oil level and any elements in the maintenance operation table
- look out for any damaged, incorrectly installed, modified or missing parts.

NOTE : This register can be obtained from trade organisations, and in some cases from the OPPBTP or private prevention agencies.

The designated persons must be experienced in risk prevention (Articles R 233-11 or order n° 93-41).

No member of personnel is allowed to perform any check whatsoever during machine operation (Article R 233-11 of the French Labour Code).

1.4.2 - Examination of machine suitability

The manager of the site where the machine is operated must ensure the machine is suitable, i.e. capable of performing the work in complete safety, and in compliance with the operating manual. Furthermore, the French order of 1st March 2004 addresses problems relative to leasing, examination of the state of conservation, checking upon operation after repairs, and test conditions (static test coefficient 1.25; dynamic test coefficient 1.1). All users must consult this order's requirements and comply with them.

1.4.3 - State of conservation

Detect any deterioration liable to cause hazardous situations (concerning safety devices, load limiters, tilt sensor, cylinder leaks, deformation, welds, bolt tightness, hoses, electrical connections, tyre state, excessive mechanical gaps).

NOTE : If the machine is rented/leased, the user responsible for the machine must examine its state of conservation and suitability. He must obtain assurance from the leaser that general periodic inspections and pre-operation inspections have been performed.

1.5 - REPAIRS AND ADJUSTMENTS

These cover major repairs, and work on or adjustments to safety systems or devices (of a mechanical, hydraulic or electrical nature).

These must be performed by personnel from or working for PINGUELY-HAULOTTE who will use only original parts.

Any modification not controlled by PINGUELY-HAULOTTE is unauthorised.

The manufacturer cannot be held responsible if non-original parts are used or if the work specified above is not performed by PINGUELY-HAULOTTE-approved personnel.

1.6 - VERIFICATIONS WHEN RETURNING TO SERVICE

To be performed after:

- extensive disassembly-reassembly operation,
- repair affecting the essential components of the machine,
- any accident caused by the failure of an essential component.

It is necessary to perform a suitability examination, a state of conservation examination, a static test, a dynamic test (see coefficient in paragraph (see Chap 1.4.2, page 5).

Caution !
These test must be performed by a competent person.

1.7 - BEAUFORT SCALE

The Beaufort Scale of wind force is accepted internationally and is used when communicating weather conditions. It consists of number 0 - 17, each representing a certain strength or velocity of wind at 10m (33 ft) above ground level in the open.

Description of Wind		Specifications for use on land	MPH	m/s
0	Calm	Calm; smoke rises vertically	0-1	0-0.2
1	Light Air	Direction of wind shown by smoke	1-5	0.3-1.5
2	Light Breeze	Wind felt on face; leaves rustle; ordinary vanes moved by wind	6-11	1.6-3.3
3	Gentle Breeze	Leaves and small twigs in constant motion; wind extends light flag	12-19	3.4-5.4
4	Moderate Breeze	Raises dust and loose paper; small Branches are moved	20-28	5.5-7.9
5	Fresh Breeze	Small trees in leaf begin to sway; crested wavelets form on inland waterways	29-38	8.0-10.7
6	Strong Breeze	Large branches in motion; whistling heard in telephone wires; umbrellas used with difficulty	39-49	10.8-13.8
7	Near Gale	Whole trees in motion; inconvenience felt when walking against wind	50-61	13.9-17.1
8	Gale	Breaks twigs off trees; generally impedes progress	62-74	17.2-20.7
9	Strong Gale	Slight structural damage occurs (chimney pots and slates removed)	75-88	20.8-24.4

https://truckmanualshub.com/

1.8 - MINIMAL DISTANCES OF SAFETY

- It is important to hold the machine far away from the lines and equipment of electrical current according to the applicable governmental réglements and the following diagram

Voltage	distance minimum safety in meters
from 0 to 300 V	Avoid contact
from 300 V to 50 kV	3.05
from 50 kV to 200 kV	4.60
from 200 kV to 350 kV	6.10
from 350 kV to 500 kV	7.62
from 500 kV to 750 kV	10.67
from 750 kV to 1000 kV	13.72

https://truckmanualshub.com/

2 - PRESENTATION

The self-propelled elevating work platforms, models HA 16 PX and HA 18 PX, are designed to carry out all kinds of overhead work within the limits imposed by their characteristics (see Chap. 2.3, page 11, and Chap. 2.4, page 13) and provided that all safety instructions relating to the equipment and environment of use are respected.

The main control panel is situated in the platform.

The control panel situated on the turntable is to be used in emergencies or cases of machine failure.

2.1 - IDENTIFICATION

A plate attached to the rear, right-hand side of the chassis, is engraved with all the necessary information for identification of the machine.

REMINDER: When requesting information, intervention or spare parts, you will need to specify the machine type and serial number.

2.2 - MAIN COMPONENTS

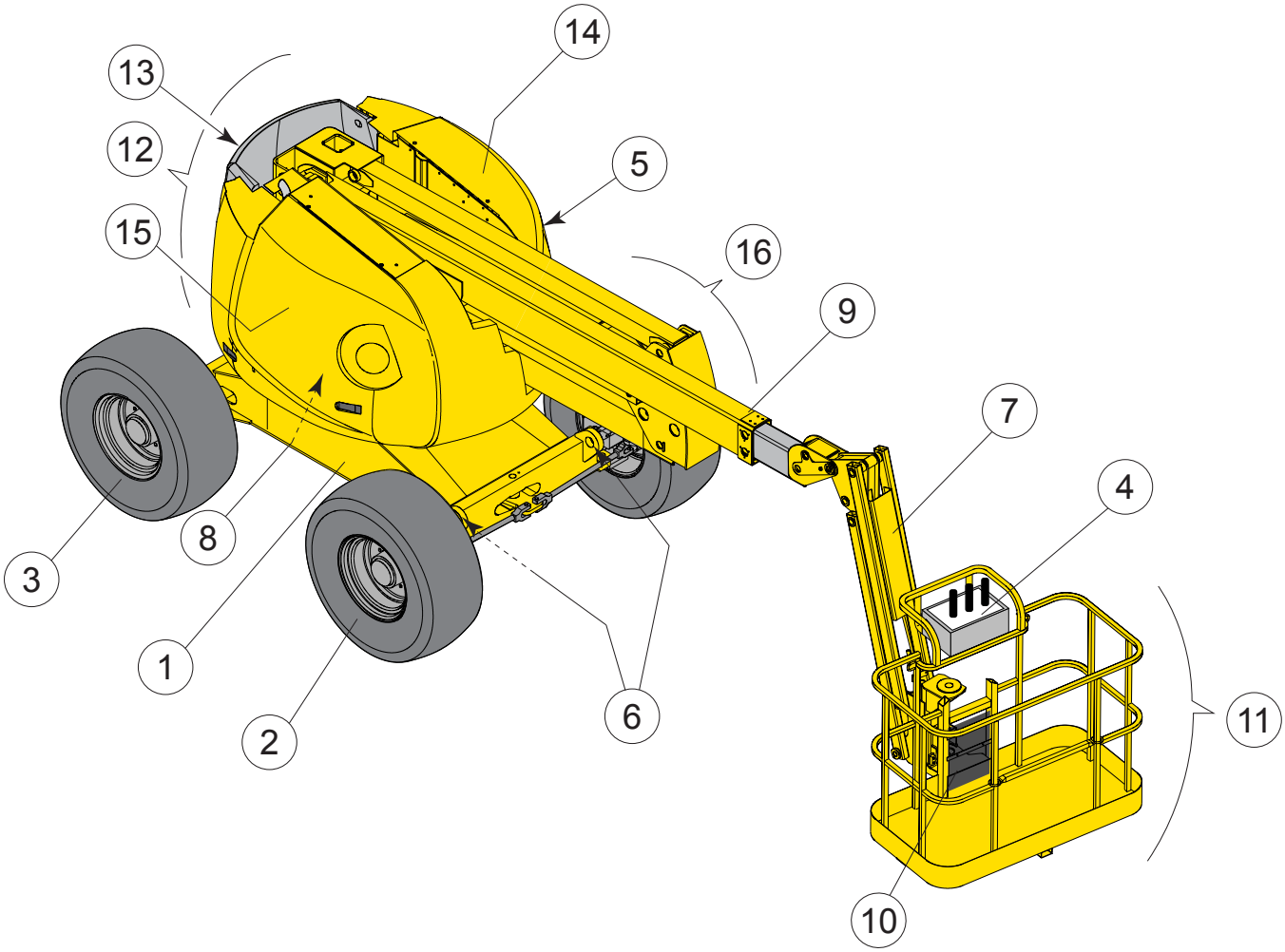

1 - Rolling chassis	9 - Boom
2 - Steering wheels	10 - Document holder
3 - Drive and steering wheels	11 - Platform
4 - Top control panel	12 - Turntable
5 - Bottom control panel	13 - Counterweight
6 - Anchoring lugs	14 - Right compartment
7 - Jib	15 - Left compartment
8 - Slew ring	16 - Arm

2.3 - WORKING AREA

2.3.1 - HA 16P working area

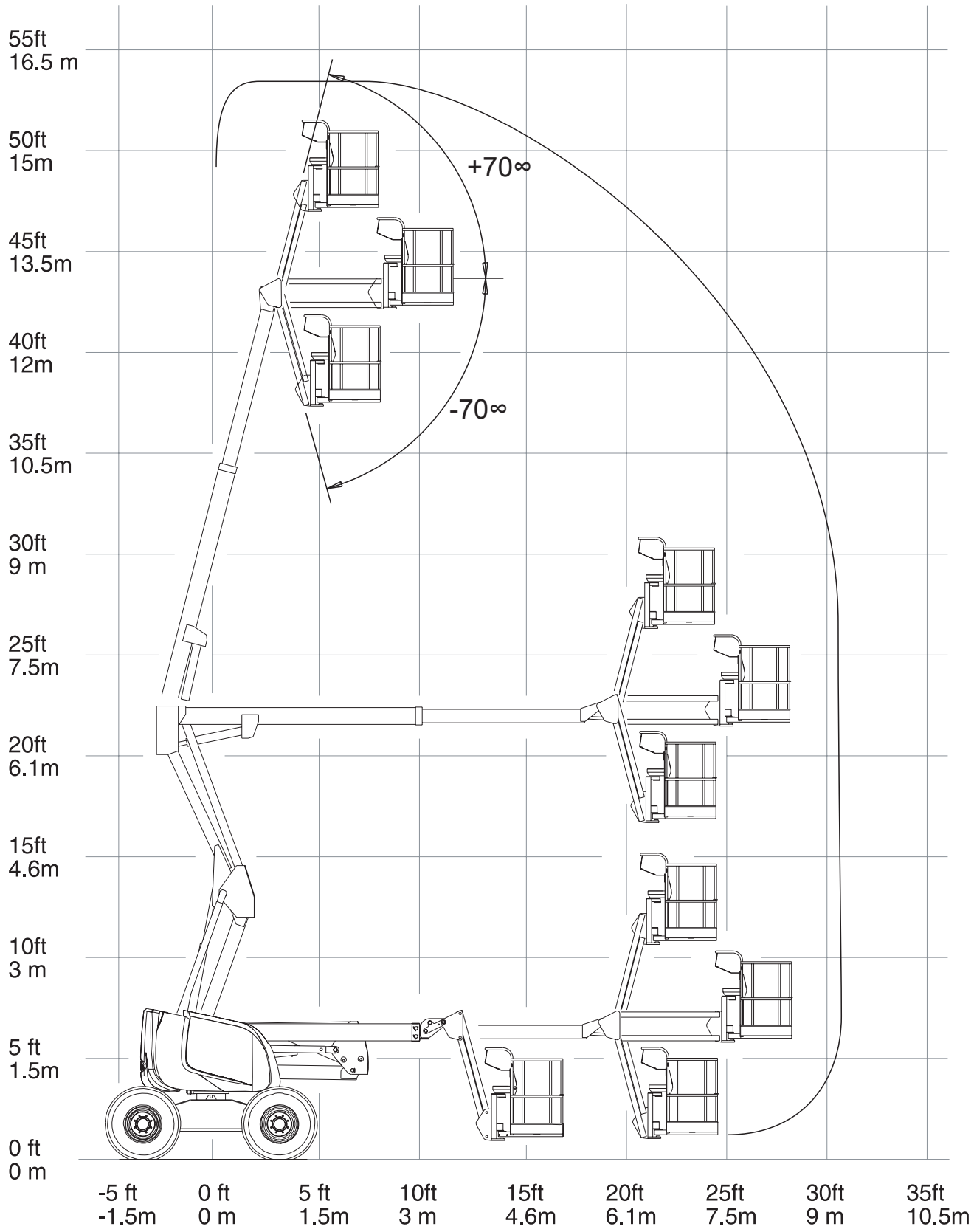

2.3.2 - HA 18P working area

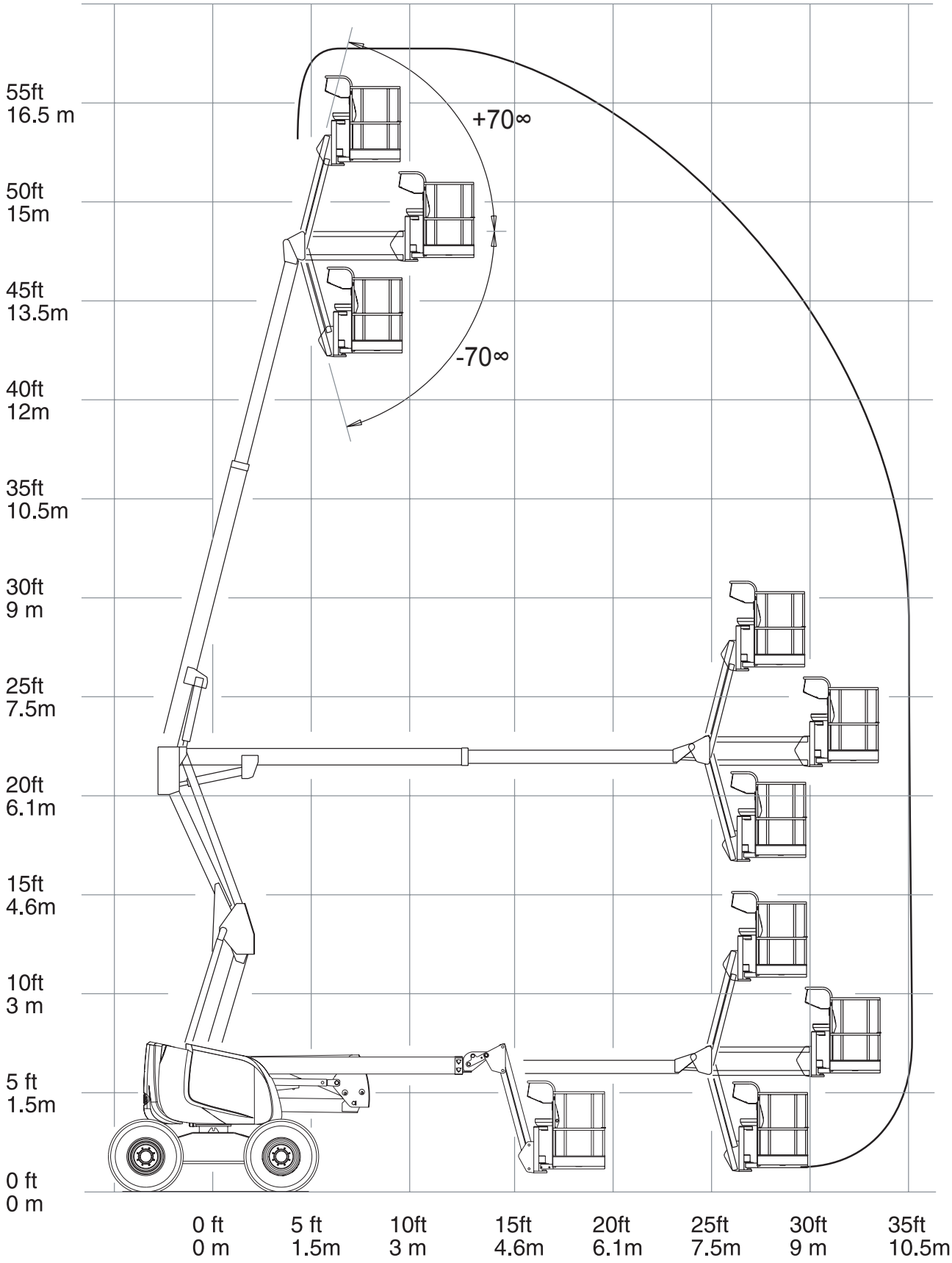

2.4 - TECHNICAL CHARACTERISTICS

2.4.1 - HA 16PX TECHNICAL CHARACTERISTICS

DESCRIPTION	HA 16PX		Unit
	Standard basket 1800x800	Basket option 2300x800	
Load	230	230	Kg
Max. lateral manual force	400	400	N
Max. wind speed	60	45	Km/h
Overall platform length in idle position	6.95		m
Overall platform length in transport position	5.25		m
Height under basket floor in idle position	0.235		m
Height under basket floor in work position			m
Overall width of the platform	2.3 (standard tyres)	2.38 (wide tyres)	m
Overall height of the platform	2.2		m
Floor clearance, chassis edge	0.4		m
Floor clearance of the basket in the idle position	0.235		m
Floor clearance of the basket in the transport position			m
Platform height in the transport position	2.15		m
Platform height in the idle position	2.20		m
Platform width at tyre level	2.3 (standard tyres)	2.38 (wide tyres)	m
Max. height of floor rise	14		m
Max. height of floor lowering			m
Max. height of articulation point	6.60		m
Max. reach of the basket above the ground	8.70		m
Turntable rotation angle	360 (continuous)		°
Positive boom range	74		°
Negative boom range	-3		°
Overall length of the basket	1.80	2.3	m
Overall width of the basket	0.80	0.8	m
Overall height of the basket, platform	1.10		m
Basket rotation angle	-90° /+ 90°		°
External turning radius	4		m
Internal turning radius	1.9		m
Tyre width	0.385		m
Lateral distance between the wheels	2.00		m
Tyre diameter	1.080		m
Max. slope in travel	50		%
Authorised tilt	5		°
Hydraulic tank	100		l
Fuel tank	72		l
Total weight	7240		Kg
Differential blocking	yes		
Hydraulic brakes	2		
Freewheel	yes		
DEUTZ motor - Power - Power at slow speed - Consumption	F3L1011F 38CH/28.33hp/28Kw at 2400 rpm 20.4 CH/15.21 hp/15Kw at 1250 rpm 2309 Kwh		

DESCRIPTION	HA 16PX	Unit
Travel speed - micro speed: - low speed: - medium speed: - high speed:	 0.22 0.38 0.77 1.52	m/s
Hydraulic pressure - general - travel - steering - orientation	 24 24 24 10	MPa
Max. force on one wheel	3610	Kg
Max. pressure on the ground - hard ground (concrete) - soft ground (earth)	 8 3.2	daN/cm²
Starter battery	12V-95Ah-450A	
Supply voltage	12	V
Accoustic power	104	dB(A)
Accoustic pressure at 10 metres	75	dB(A)

2.4.2 - HA 18PX TECHNICAL CHARACTERISTICS

DESCRIPTION	HA 16PX		Unit
	Standard basket 1800x800	Basket option 2300x800	
Load	230	230	Kg
Max. lateral manual force	400	400	N
Max. wind speed	60	45	Km/h
Overall platform length in idle position	7.60		m
Overall platform length in transport position	5.90		m
Height under basket floor in idle position	0.235		m
Height under basket floor in work position			m
Overall width of the platform	2.3 (standard tyres)	2.38 (wide tyres)	m
Overall height of the platform	2.2		m
Floor clearance, chassis edge	0.4		m
Floor clearance of the basket in the idle position	0.235		m
Floor clearance of the basket in the transport position			m
Platform height in the transport position	2.15		m
Platform height in the idle position	2.20		m
Platform width at tyre level	2.3 (standard tyres)	2.38 (wide tyres)	m
Max. height of floor rise	15.3		m
Max. height of floor lowering			m
Max. height of articulation point	6.60		m
Max. reach of the basket above the ground	10.07		m
Turntable rotation angle	360 (continuous)		°
Positive boom range	74		°
Negative boom range	-3		°
Overall length of the basket	1.80	2.3	m
Overall width of the basket	0.80	0.8	m
Overall height of the basket, platform	1.10		m
Basket rotation angle	-90° /+ 90°		°

https://truckmanualshub.com/

DESCRIPTION	HA 16PX	Unit
External turning radius	4	m
Internal turning radius	1.9	m
Tyre width	0.385	m
Lateral distance between the wheels	2.00	m
Tyre diameter	1.080	m
Max. slope in travel	50	%
Authorised tilt	5	°
Hydraulic tank	100	l
Fuel tank	72	l
Total weight	8120	Kg
Differential blocking	yes	
Hydraulic brakes	2	
Freewheel	yes	
DEUTZ motor - Power - Power at slow speed - Consumption	F3L1011F 38CH/28.33hp/28Kw at 2400 rpm 20.4 CH/15.21 hp/15Kw at 1250 rpm 2309 Kwh	
Travel speed - micro speed: - low speed: - medium speed: - high speed:	 0.22 0.38 0.77 1.52	m/s
Hydraulic pressure - general - travel - steering - orientation	 24 24 24 10	MPa
Max. force on one wheel	3960	Kg
Max. pressure on the ground - hard ground (concrete) - soft ground (earth)	 8.2 3.6	daN/cm²
Starter battery	12V-95Ah-450A	
Supply voltage	12	V
Accoustic power	104	dB(A)
Accoustic pressure at 10 metres	75	dB(A)

2.5 - DIMENSIONS

2.5.1 - HA 16PX dimensions

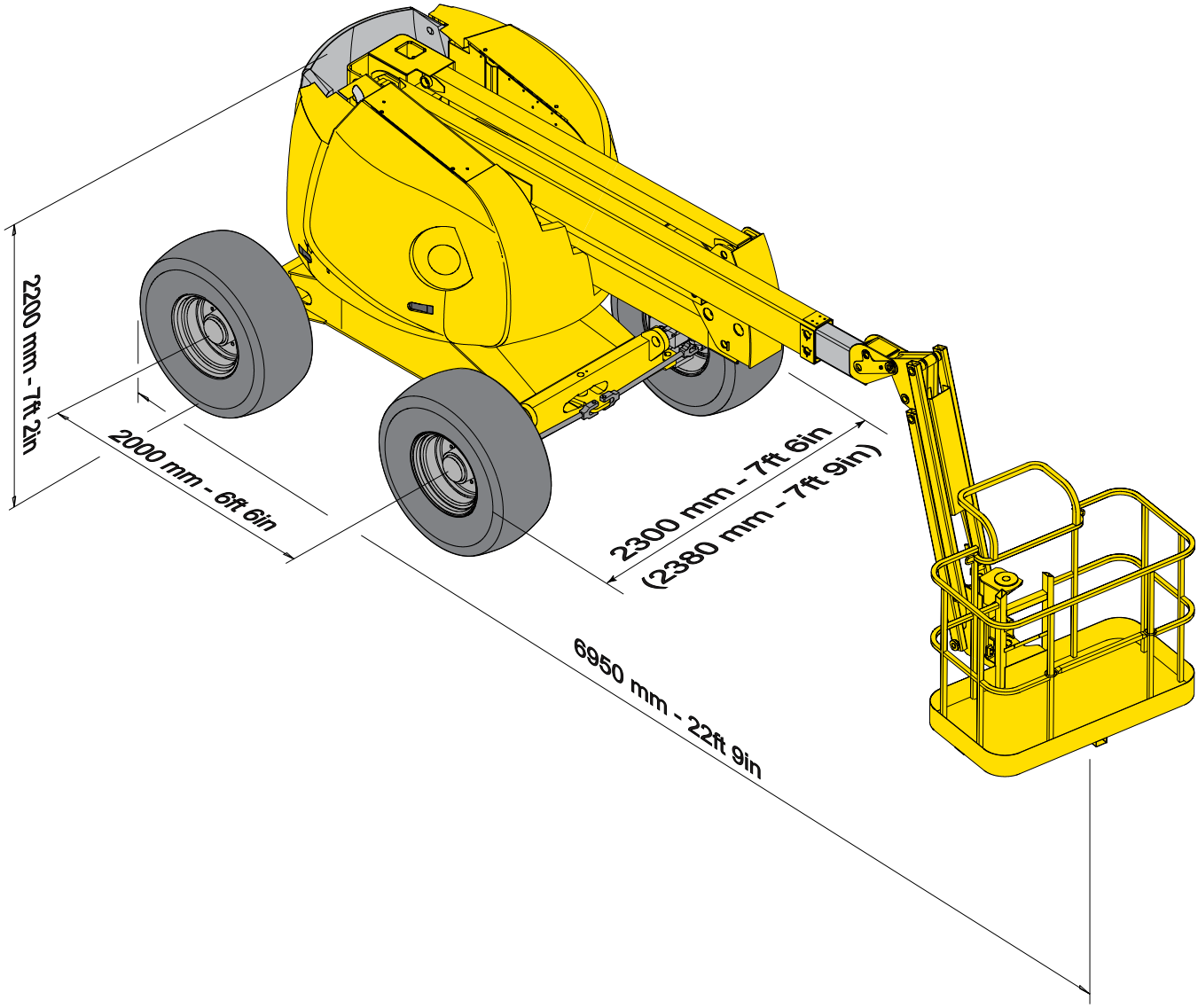

2.5.2 - HA 18PX dimensions

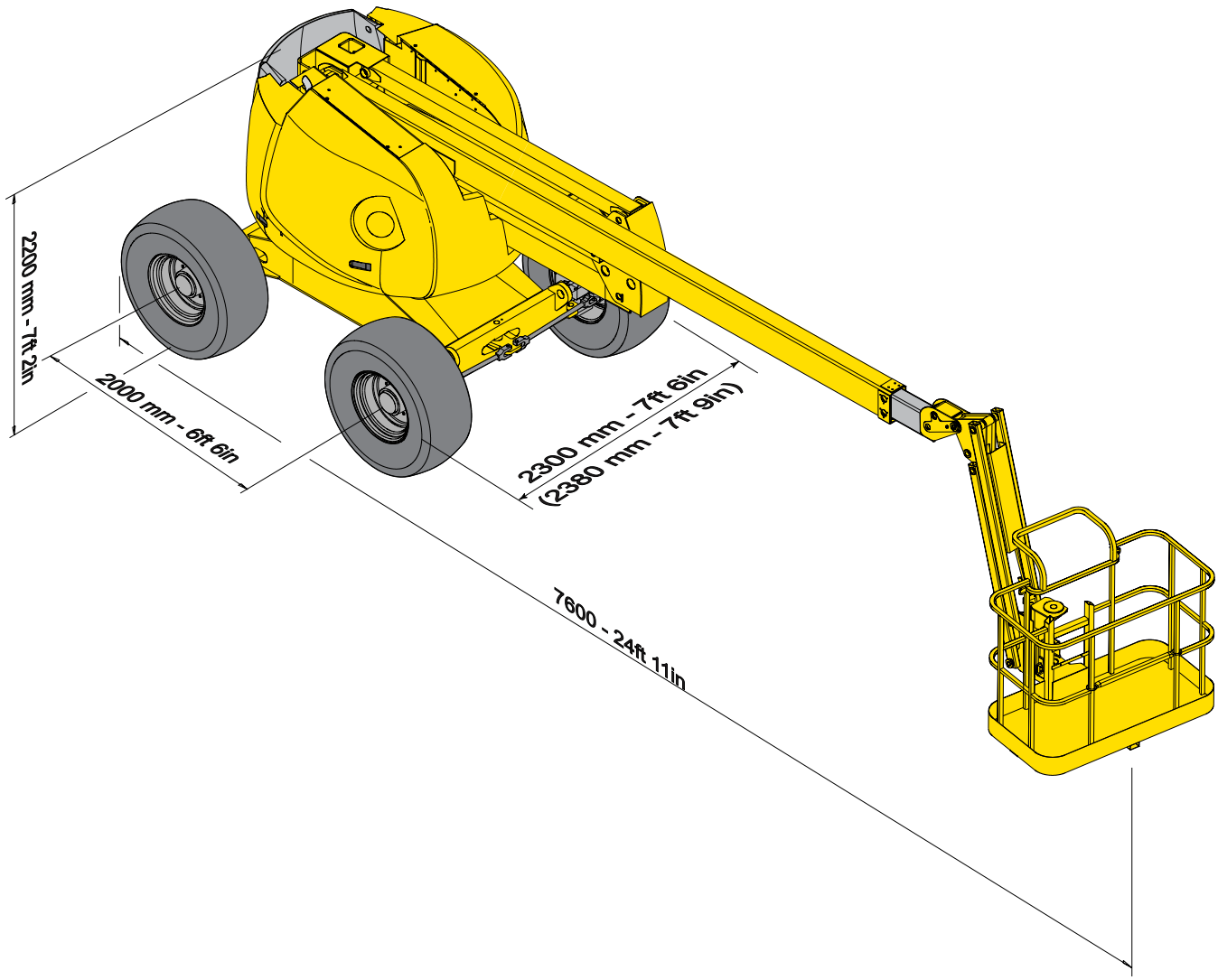

2.6 - LABELLING

2.6.1 - Position of labels

Ref	Code	Qty	Description
2	307P218190 307P218220	1 1	HA16PX logo HA18PX logo
5	3078143710 3078143690	2 2	Floor height + load (HA18P/PX) Floor height + load (HA16P/PX)
7	3078143420 3078143430 3078143440 3078143450 3078143460 3078143470 3078144940 3078143540 3078145830 3078145940 3078144560	1	Operating instructions (French) Operating instructions (Spanish) Operating instructions (German) Operating instructions (English) Operating instructions (Italian) Operating instructions (Dutch) Operating instructions (Danish) Operating instructions (Finnish) Operating instructions (Portuguese) Operating instructions (Swedish Operating instructions (Australia)
8	307P218070 307P218110 307P218090 307P218080 307P218100 307P218120 307P218130 307P218160 307P218150 307P218140	1	Manufacturer's plate (French) Manufacturer's plate (Spanish) Manufacturer's plate (German) Manufacturer's plate (English) Manufacturer's plate (Italian) Manufacturer's plate (Dutch) Manufacturer's plate (Danish) Manufacturer's plate (Finnish) Manufacturer's plate (Swedish Manufacturer's plate (Portuguese)
9	3078173550	1	Do not stop in the work area
10	3078143490 3078144430	1	Machine uninsulated Danger of electrocution (Australia)
11	3078143520	1	"Hydraulic oil" label
12	3078145070	1	Travel direction danger
13	3078143590	1	High and low hydraulic oil
14	3078143620	2	Risk of hand crushing
15	3078143510	1	Battery check plate
16	3078143610	1	Wear protective gear
17	3078143640	2	Do not stand on the cover
19	3078143600	1	Caution: do not use as a welding earth
20	3078143540a 3078144570	1	The part must be connected The part must be connected (Australia)
21	3078143680 b	1	Read CE user manual
23	307P217920	1	Chassis control panel
24	307P217930	1	Platform control panel
26	3078143560	1	Do not use the machine during charging
29	3078145730	1	240V socket position (Holland)
30	2420505950	1	Guarantee activation
31	3078145180	1	Do not interchange
33	3078144490	4	Handling lugs (Australia)
34	3078144510	1	Fuel filling with gun only (Australia)
35	3078144390	1	Charger connection (Australia)
40	2421808660		Yellow and black reflective adhesive marking (Holland)
41	3078143570	1	ring lubrication
42	3078143530	2	Remove the pin

Ref	Code	Qty	Description
43	178B153230 178B153240 178B153140	1	"E" logo "N" logo X logo
44	3078143630	2	Risk of body crushing
45	178C143900 178C143910 178C143920	1	"X" logo "E" logo "N" logo
46	307P218310	1	hand pump plate
	3078146150	1	Z1 - Z2 - Z3
48	3078137440 a	1	Green arrow
49	3078137430 a	1	Red arrow
50	307P217770	3	"HAULOTTE" logo
52	3078144930 a	1	Emergency operation (Australia)
53	3078144520	1	Wear harness (Australia)
54	3078148700	1	Acoustic power
58	307P216290	2	Fixing point of harness.
60	7815351	1	Safety
100	3078151530 3078151540	4 4	Load for wheel

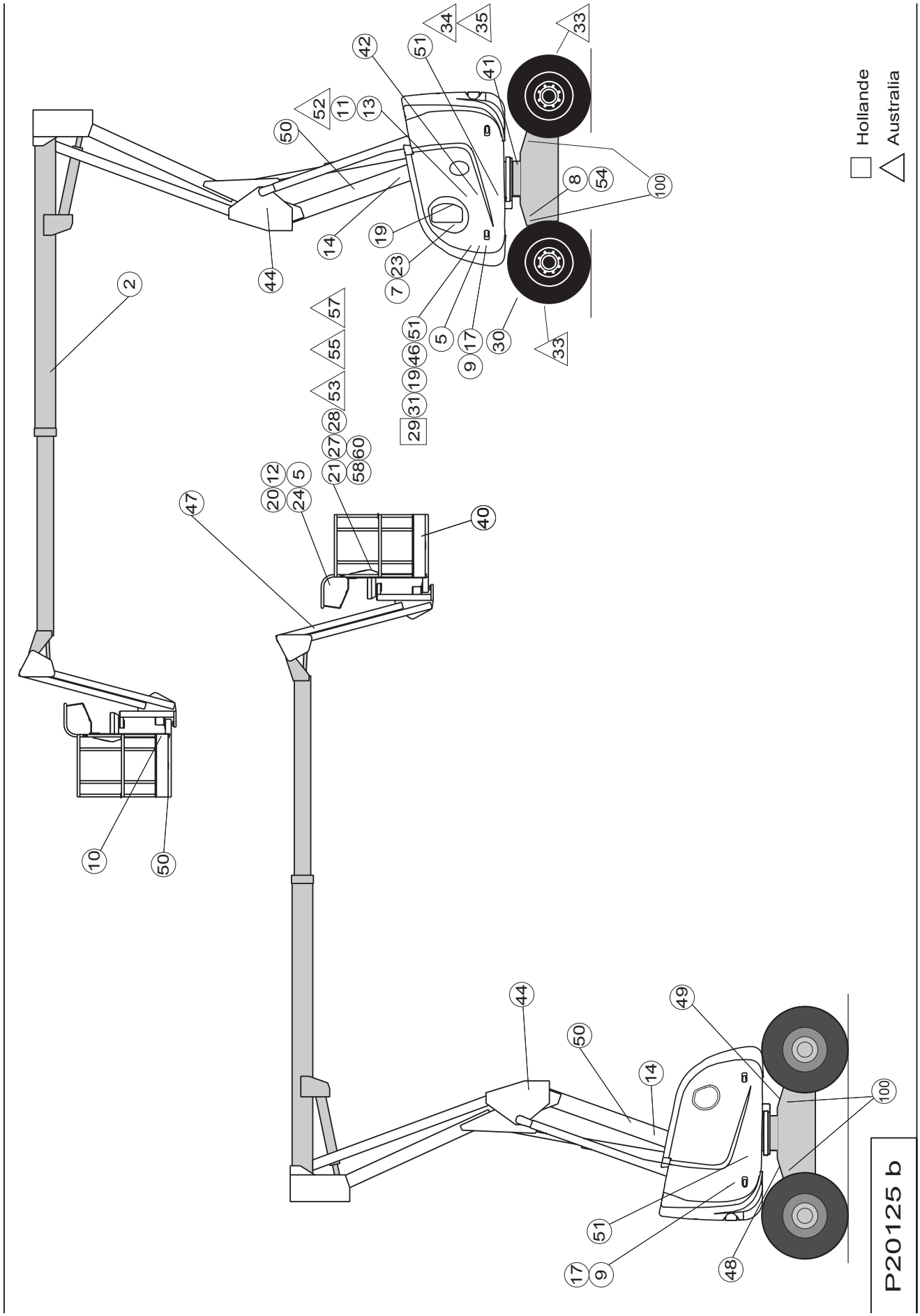
Hollande
Australia
P20125 b

2.6.2 - Common labels

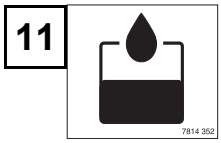

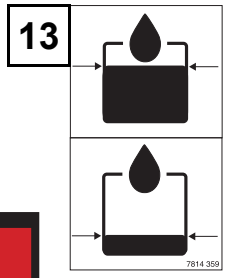

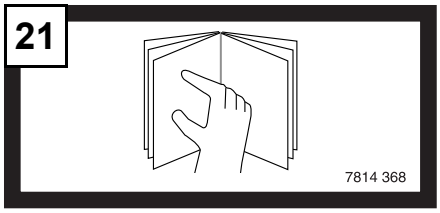

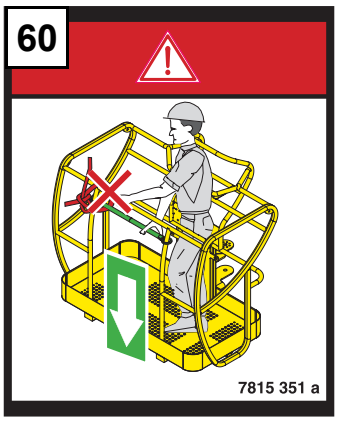

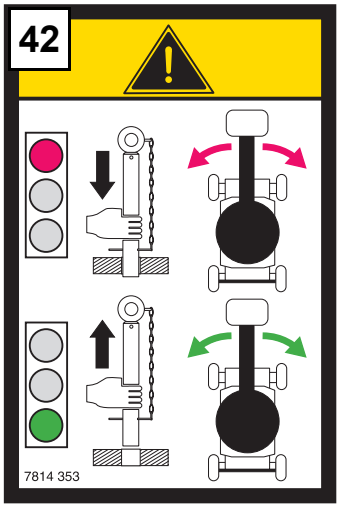

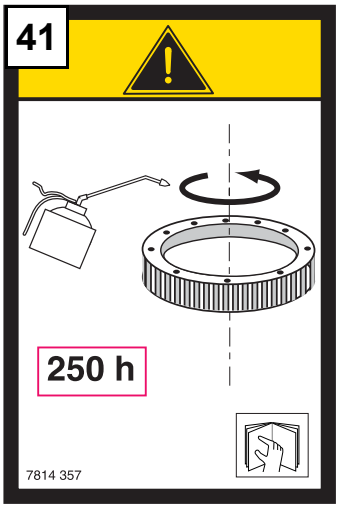

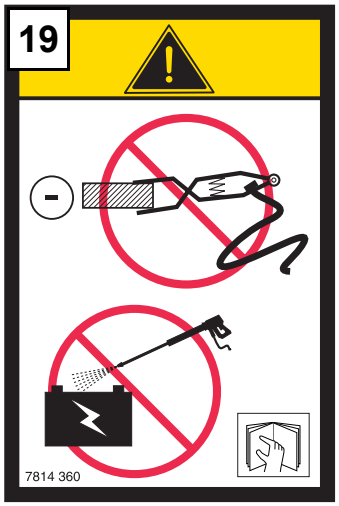

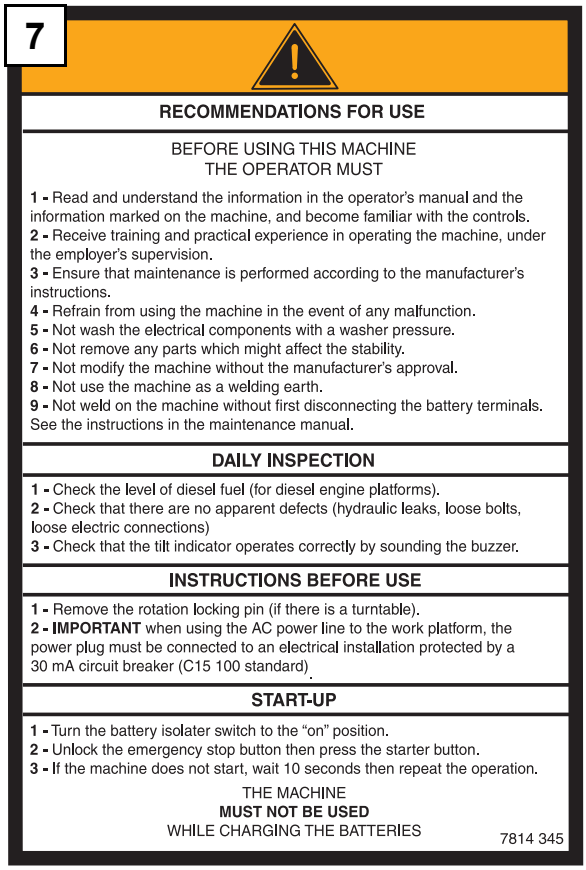

7

RECOMMENDATIONS FOR USE

BEFORE USING THIS MACHINE
THE OPERATOR MUST

1 - Read and understand the information in the operator's manual and the information marked on the machine, and become familiar with the controls.
2 - Receive training and practical experience in operating the machine, under the employer's supervision.
3 - Ensure that maintenance is performed according to the manufacturer's instructions.
4 - Refrain from using the machine in the event of any malfunction.
5 - Not wash the electrical components with a washer pressure.
6 - Not remove any parts which might affect the stability.
7 - Not modify the machine without the manufacturer's approval.
8 - Not use the machine as a welding earth.
9 - Not weld on the machine without first disconnecting the battery terminals. See the instructions in the maintenance manual.

DAILY INSPECTION

1 - Check the level of diesel fuel (for diesel engine platforms).
2 - Check that there are no apparent defects (hydraulic leaks, loose bolts, loose electric connections)
3 - Check that the tilt indicator operates correctly by sounding the buzzer.

INSTRUCTIONS BEFORE USE

1 - Remove the rotation locking pin (if there is a turntable).
2 - IMPORTANT when using the AC power line to the work platform, the power plug must be connected to an electrical installation protected by a 30 mA circuit breaker (C15 100 standard).

START-UP

1 - Turn the battery isolater switch to the "on" position.
2 - Unlock the emergency stop button then press the starter button.
3 - If the machine does not start, wait 10 seconds then repeat the operation.

THE MACHINE
MUST NOT BE USED
WHILE CHARGING THE BATTERIES

7814 345

10

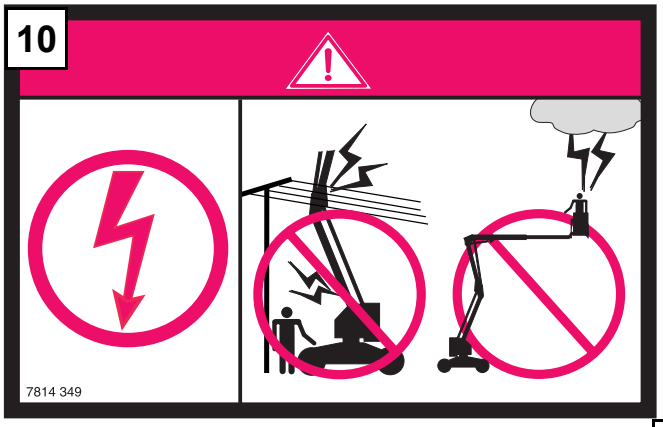

31

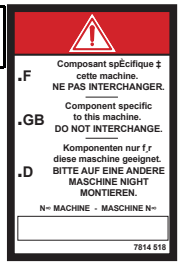

12

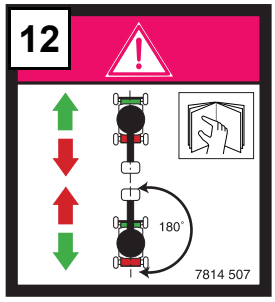

23

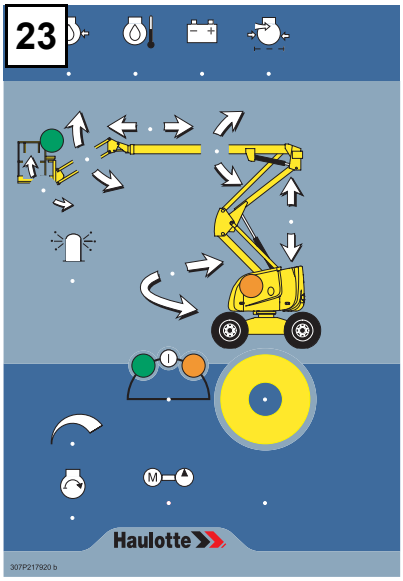

24

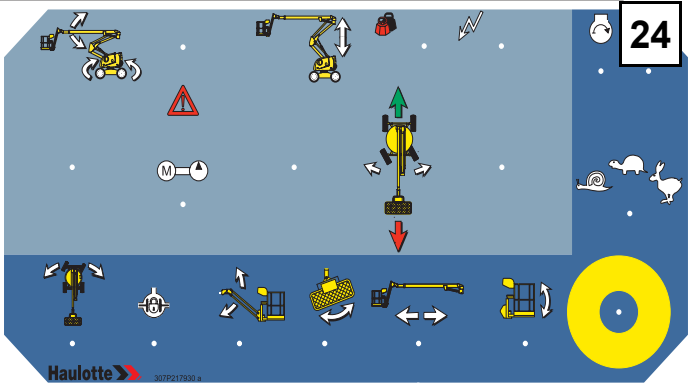

48

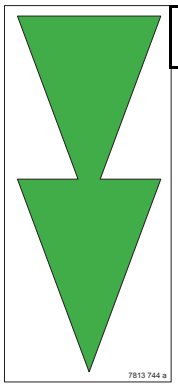

49

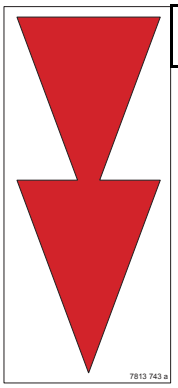

54

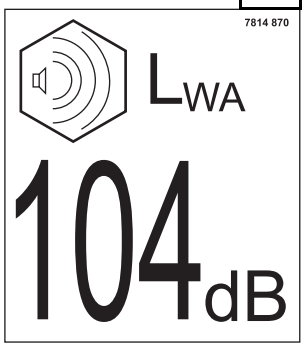

58

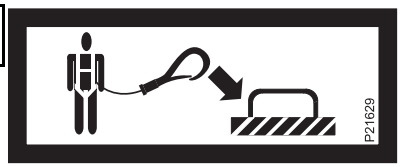

46

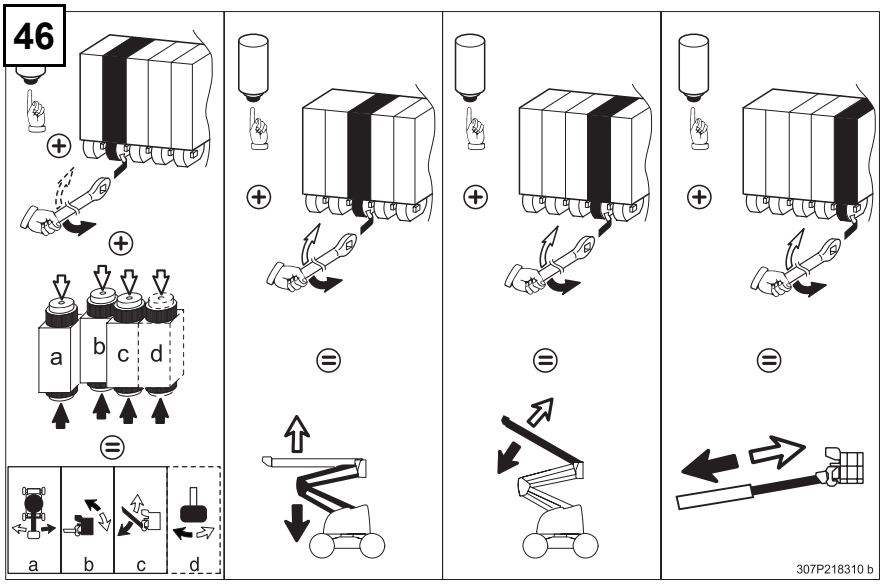

2.6.3 - Labels specific to models

HA 16PX

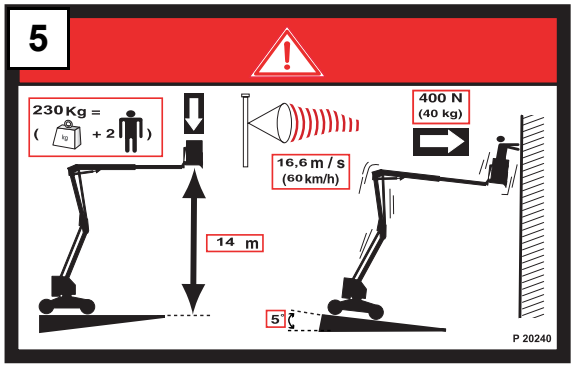

HA 18PX

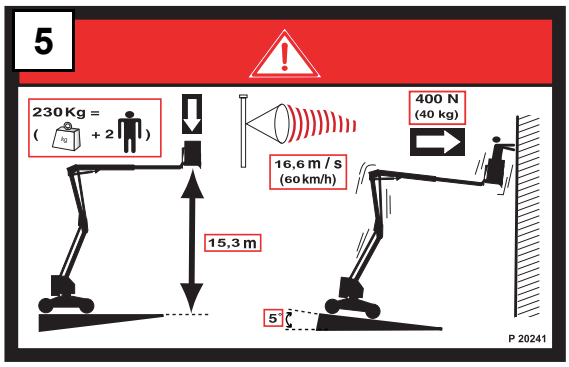

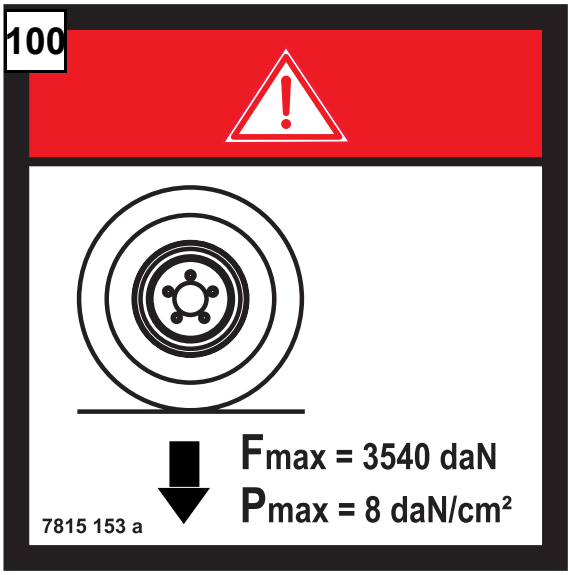

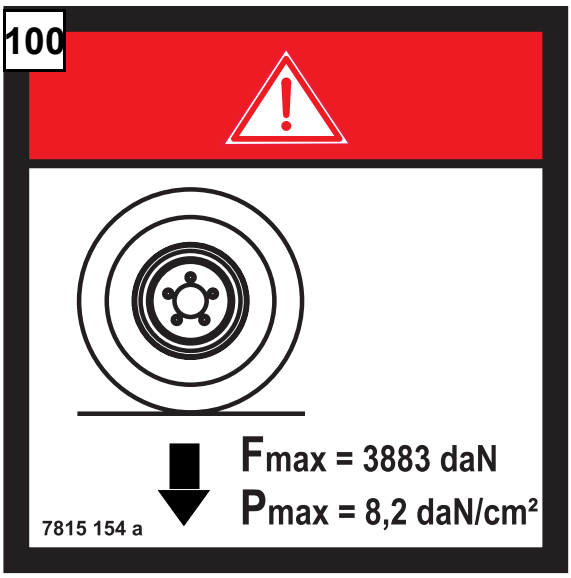

2.6.4 - Labels specific to options

Bi-energy option

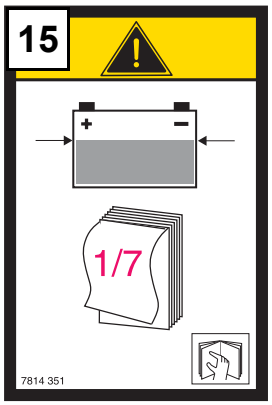

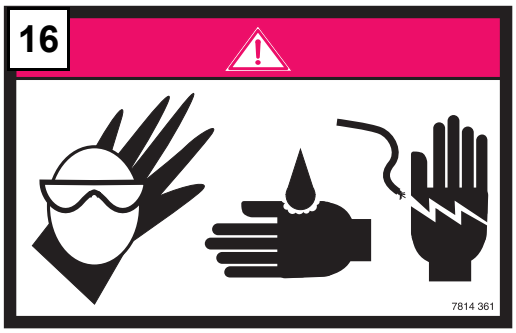

2.6.5 - Labels specific to Holland

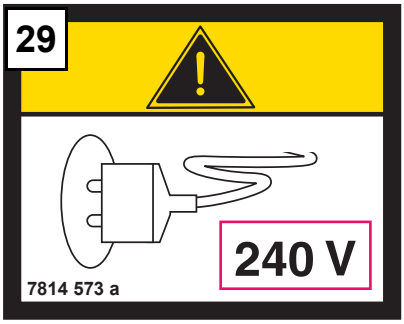

2.6.6 - Labels specific to Australia

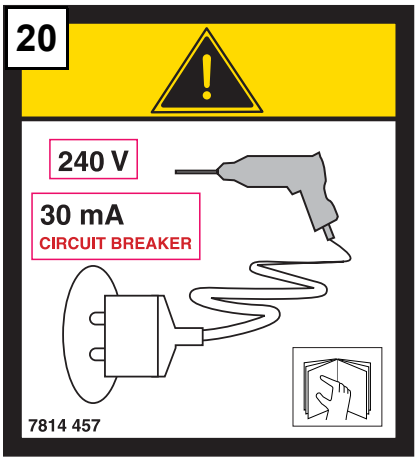

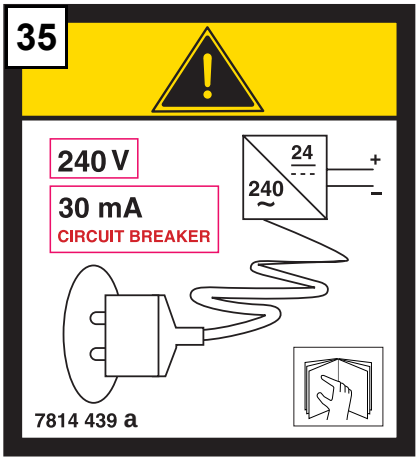

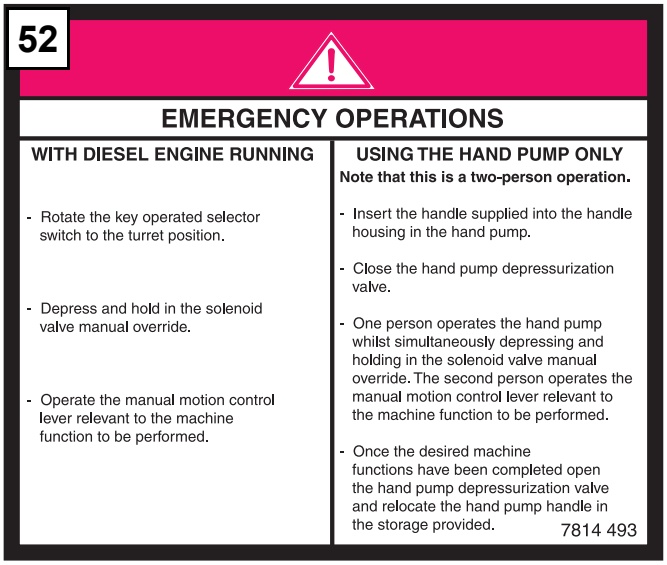

3 - OPERATING PRINCIPLE

3.1 - HYDRAULIC CIRCUIT

All the machine's movements are powered by hydraulic energy from a self-regulatiung, open circuit, piston pump, equipped with a "LOAD SENSING" compensator.

3.1.1 - Movement control

3.1.1.1 -Travel, slewing, arm lifting and boom lifting movements

These movements are controlled in proportional distribution (compensated in pressure). Pump flow is automatically adapted to the demand by the "LOAD SENSING" channel. In neutral, there is no pump flow.

3.1.1.2 -Telescoping, jib, basket rotation, compensation and steering movements

These movements are controlled by 4-channel electrovalves, with on/off flow. A proportional distributor valve provides the flow required for these movements.

3.1.1.3 -Telescoping, boom lifting, arm lifting and jib cylinders

These are equipped with sealed, flanged, balancing valves.

3.1.2 - Actuators

The type of actuator varies depending on the movement.

Caution!
Adjustments can only be made by specialised personnel.

3.1.2.1 -Platform rotation

Platform rotation uses a hydraulic motor. Rotation speed can be adjusted by flow limiters.

3.1.2.2 -Platform compensation

Compensation works by oil transfer between 2 cylinders with similar characteristics.

The cylinder being compensated is fitted with a double flanged controlled valve.

3.1.2.3 -Travel (moving the machine)

Hydraulic motors mounted in the wheels drive the wheels via epicycloidal reducing gears. The motors are mounted on the four steering wheels.

The motor pressure supply eliminates the brake's action on the wheels. As soon as movement stops, the brake returns to its place by spring action.

A hydraulic differential blocking system is provided on each axle.

The three speeds (high, medium and low) are controlled by a switch.

Speed	4x4 version principle
High speed	The steering axle is switched to freewhel and the flow from the pump goes through the motors mounted in series on the front wheels.
Medium speed	The steering axle is switched to freewhel and the flow from the pump goes through the two motors mounted in parallel on the front wheels.
Low speed	Pump flow is divided between the front and rear axles. The flow to each axle supplies the axle's hydraulic motors mounted in parallel.

3.1.3 - Manual emergency system

If the diesel motor works, but a failure occurs preventing use of arm lifting, boom lifting, turntable orientation, jib, basket rotation, compensation movements from the platform and turntable control panels, these movements can be controlled using the mechanical levers and pushing the manual control of the electrovalve located at the top on the main distribution block.

3.1.4 - Emergency and rescue

Caution!
Only a skilled operator can perform emergency or rescue operations.

3.1.4.1 -Rescue

If the operator in the platform becomes unable to control the movements inspite of the machine working normally, a skilled operator on the ground can use the turntable control panel with the main diesel power source to bring the platform operator back down to the ground.

3.1.4.2 -Emergency operation

Caution!
Use of the emergency unit is exclusively reserved for rescuing personnel if the main hydraulic power supply fails. Any other use may cause damage

A standby electropump unit controlled from either the platform or the turntable can be used if the main pump fails.

If an operating incident occurs preventing the operator in the platform to return to the ground, a skilled operator can bring him down using the electric pump and the electric controls on the turntable control panel.

Instructions:

- Turn the key to the "turntable station" position (Ref 13 , Photo :, page 33)
- Activate the switch (Ref 9, Photo :, page 33) controlling the standby unit.
- Activate the switches corresponding to the movements required (Ref 5-6-7-8, Photo :, page 33).

3.2 - ELECTRICAL CIRCUIT

The electrical power used for the controls and to start the heat motor is supplied by a 12v battery.

3.2.1 - Control of the load in the platform

If the load in the platform exceeds the maximum authorised load, no movements are possible from the platform control station. The overload light indicator on the platform panel and the buzzer alert the operator. Load must be removed to reset the assembly.

3.2.2 - Tilt check

The fault light indicator on the platform control panel flashes and the tilt sensor emits an audible signal when maximum permitted tilt is reached . If the situation persists, after a delay of 1 to 2 sec., the controls for lifting the boom (up), lifting the arms (up), telescope out, are cut off together with the travel movement as long as the machine is extended.

To restore the travel movements, all lifting parts of the machine must be completely lowered.

NB: While the machine is extended, the tilt detector issues an audible signal as long as the slope remains greater than the authorised limit, indicating to the operator that the platform cannot be extended

3.2.3 - High travel speed

High travel speed is only authorised when the platform is completely folded.

When the boom is lifted or the arms extended, only low speed is possible.

3.2.4 - Hour counter

The operating time of the heat motor is recorded by an hour counter.

4 - OPERATION

4.1 - OPERATING SAFETY MECHANISMS

To prevent the machine from being used in excess of its capabilities, safety mechanisms have been integrated to protect personnel and the machine. These mechanisms immobilise the machine or disable movements.

In either case, if knowledge of the characteristics and operation of the machine is insufficient, a machine failure may be diagnosed, when in fact the safety mechanisms are operating correctly.

It is therefore necessary to fully understand the instructions in the following chapters.

Caution!

Do not make any movements before studying the instructions ***Chap. 4.3, page 33.***

4.1.1 - Travel (controlled from "platform" station)

To move the machine, activate the "fail-safe" by holding down the manipulator button.

Releasing the "fail-safe" pedal stops the travel movement.

Travel is possible up to a maximum slope of 5° (approx. 9%).

CAUTION:
At high and medium speed (4x4 model), it is not possible to raise the boom or to carry out telescoping and rotation movements.

THE COMPENSATION COMMAND IS ACTIVE BELOW A THRESHOLD OF 8.2 FT ONLY

4.1.2 - Emergency or rescue procedure

CAUTION:
If a rescue or emergency manual procedure is necessary, the safety mechanisms are neutralised and only qualified operators can carry out the required operations.

4.2 - UNLOADING - LOADING - MOVING THE MACHINE - PRECAUTIONS

Caution!

When transporting the machine, it is vital to block the turntable using the rotation locking pin located under the turntable (Photo 6, page 36)

IMPORTANT: Before moving or using the machine check it over to make sure it has not been damaged during transport. If any damage is apparent, express your reservations in writing to the transporter.

Caution!

A mistake could cause the machine to fall, potentially causing very serious injuries and material damage.

Unload the machine on a stable, flat and sufficiently resistant surface (see ground pressure - Chap. 2.4, page 13), free of any obstacles.

4.2.1 - Unloading by lifting

- Use a lifting beam with 4 slings.
- Take the following precautions:
  - the lifting equipment is in good condition and of sufficient capacity,
  - the slinging accessories can bear the load and show no signs of abnormal wear,
  - the slinging lugs are clean and in good condition,
  - the personnel is qualified to use lifting equipment.
- Unloading:
  - hook the 4 slings to the 4 slinging lugs,
  - lift slowly, ensuring the load is evenly distributed and slowly put the machine down.

Caution!

Never stand underneath or too close to the machine during operation.

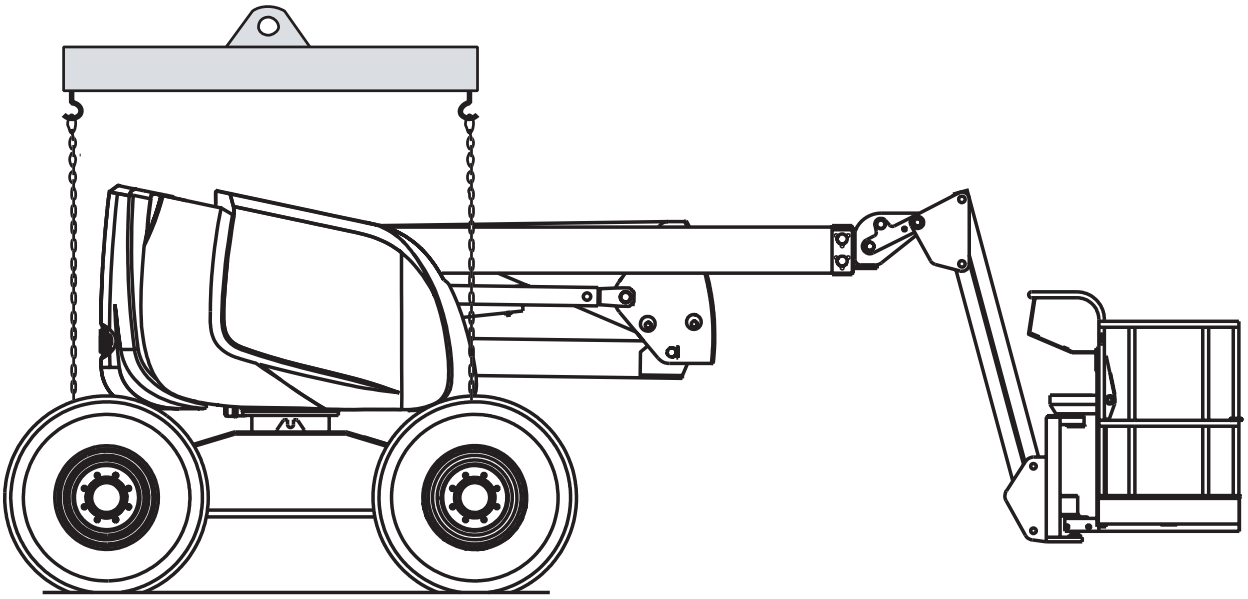

4.2.2 - Unloading using ramps

Precautions: ensure that the ramps can bear the load and that the surface offers sufficient grip to avoid any risk of the machine slipping during the procedure. Make sure the ramps are firmly secured in position.

NB: This method requires the machine to be in operation (see Chap. 4.4, page 36), therefore, to avoid all risk of incorrect operation, select low travel speed.

NB: The slope of the ramp is nearly always greater than the maximum authorised working tilt (5°). Therefore, the boom and arms must be lowered or travel will be impossible.

In this case, the buzzer sounds but travel movement is possible.

If the slope is greater than the maximum authorised tilt during travel, use a winch to add traction (see Chap. 2.4, page 13).

4.2.3 - Loading

The same precautions must be taken as for unloading.

The machine must be secured as shown in the diagram below.

Select high speed to mount lorry ramps.

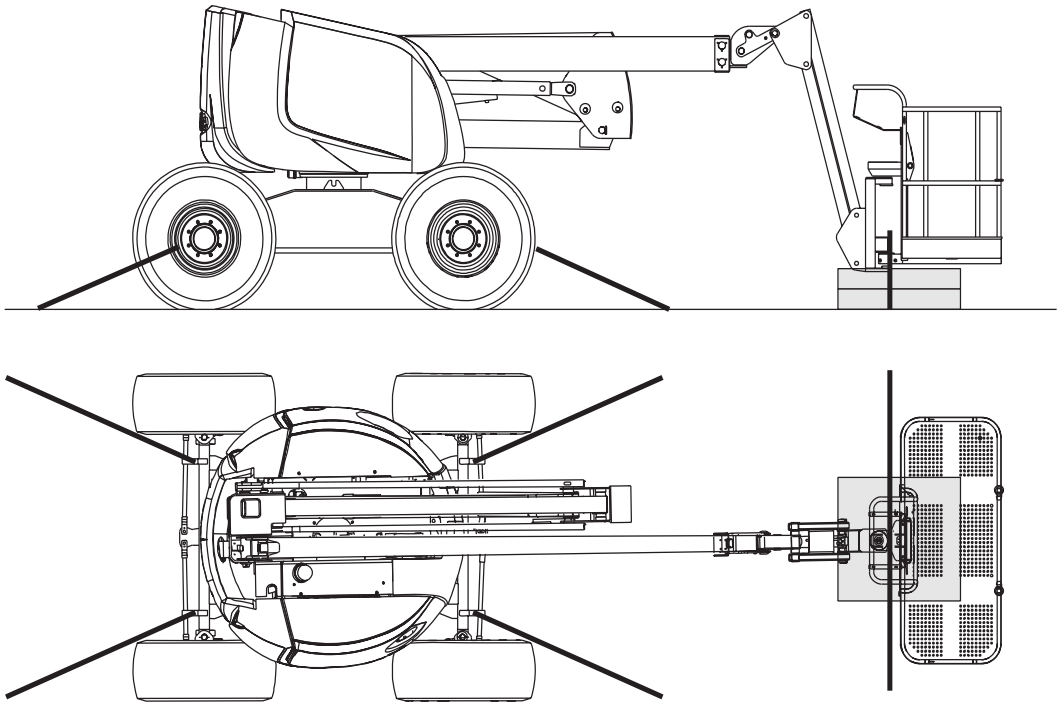

4.2.4 - Moving the machine

Closely follow traffic rules or instructions for the area in which the machine is to be moved:

- If moving over rough terrain, inspect the route carefully before beginning overhead work.
- When moving the machine, always keep a sufficient distance away from unstable areas or banks.
- Ensure that nobody is standing too close to the machine before carrying out any movement of the whole machine or the elevating parts.

REMINDER: the machine may not be driven on public highways.

4.2.5 - Filling the fuel tank

- Before filling, ensure that the fuel is the type recommended and that it is stored in clean conditions with no risk of being polluted.
- Do not take fuel from a barrel without decanting and never use fuel from the bottom.

Due to the risk of fire, take the following precautions when filling the tank:

- do not smoke
- stop the heat motor if it is operating
- stand with the wind behind you to avoid being sprayed with fuel
- touch the outside of the filling hole with the pump nozzle before starting to fill with fuel to avoid the risk of sparks due to static electricity.
- close the tank cap tightly and clean up any fuel that has spilled out of the tank.

4.3 - OPERATIONS PRIOR TO FIRST USE OF THE MACHINE

REMINDER: Before carrying out any operation, ensure that you are familiar with the machine by reading this manual and the instructions on the various plates.

4.3.1 - "Turntable" control panel

Photo 1

Photo 2

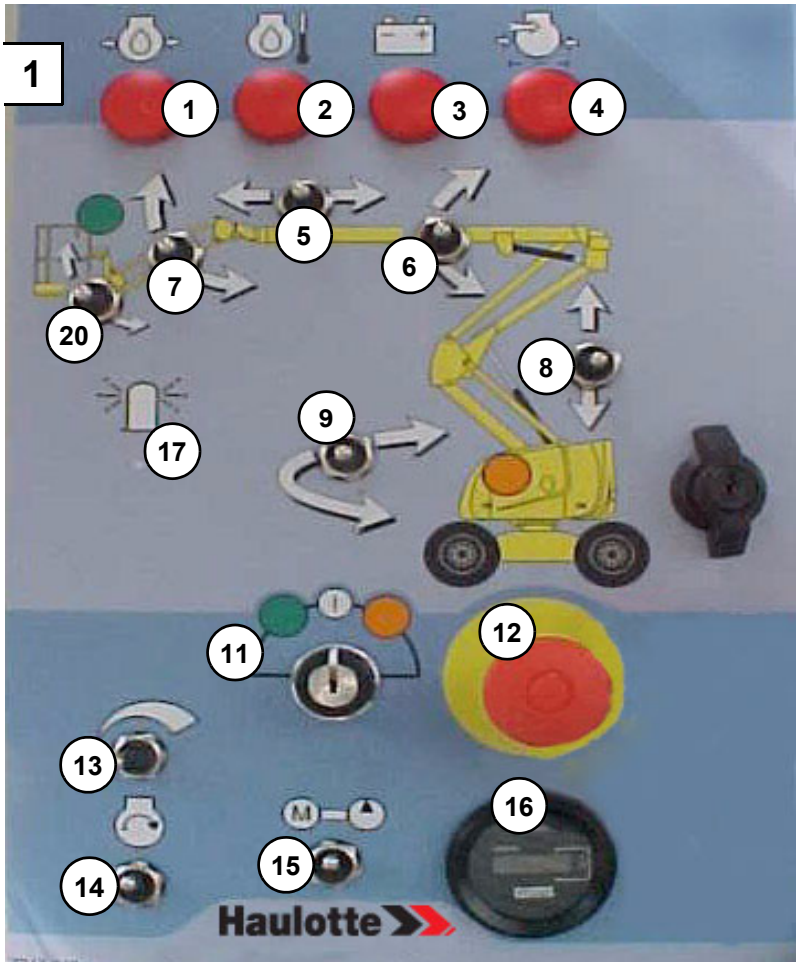

1 - Motor oil pressure light
2 - Motor temperature light
3 - Battery charge indicator
4 - Filter clogging indicator
5 - Boom telescope control
6 - Raising control
7 - Jib control
8 - Lifting control
9 - Turntable rotation control
11 - Turntable / platform control panel selector
12 - Emergency stop button
13 - Motor acceleration control
14 - Motor start button
15 - Emergency control
16 - Hour counter
17 - Optional flashing light control
18 - Buzzer
19 - Tilt detector
20- Compensation switch

⚠ Caution!

During high pressure cleaning, do not aim the jet directly towards the electrical boxes and cabinets.

4.3.2 - "Platform" control panel

Photo 3 and 4

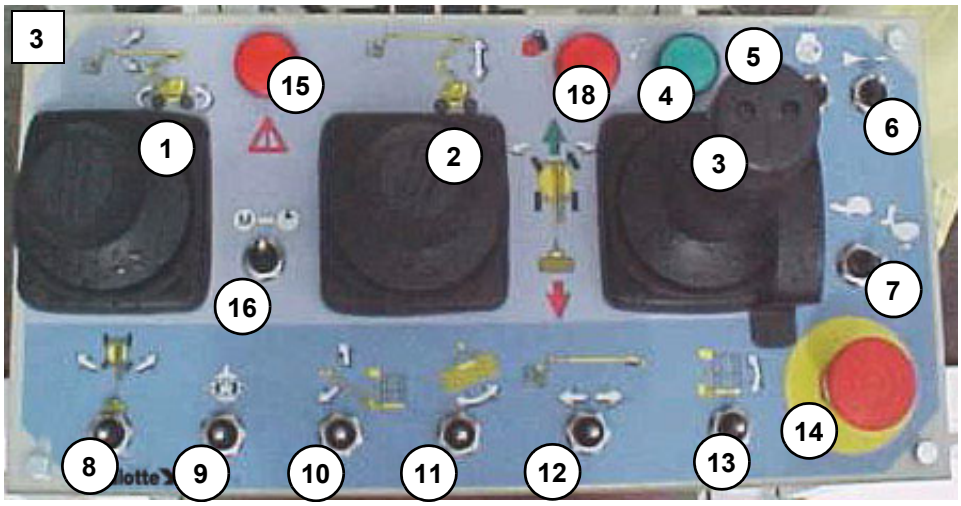

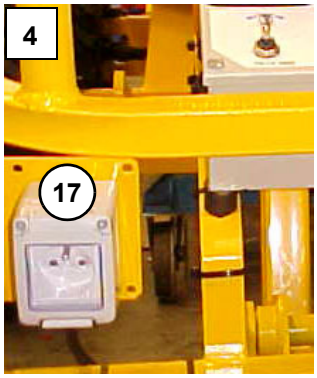

NB: The manipulators are equipped with a "fail-safe" safety contact.

1- Orientation and boom lifting manipulator
2- Arm lifting manipulator
3- Travel and BACK steering manipulator
4- Power light indicator
5- Starter switch
6- Horn
7- Low, medium, high selector switch
8- FRONT steering switch
9- Differential blocking switch
10- Jib switch
11- Platform rotation switch
12- Telescope switch
13- Compensation switch
14- Emergency stop button
15- Fault light indicator
16- Backup pump
17- 220 V single phase - 16 A plug
18- Platform overload indicator

4.3.3 - Checks before using the machine

- Ensure that the ground under the machine is flat, stable and can bear the weight of the machine (see Chap. 2.4, page 13 - ground pressure)

NB: See WORKING AREA diagram (Chap. 2.3, page 11) for maximum authorised tilt.

- Ensure that no obstacles can obstruct machine movements:
  - travel (movement of the whole machine).
  - turntable rotation
  - telescoping and lifting: see the WORKING AREA diagram (Chap. 2.3, page 11).
- Carry out a visual inspection of the machine: pay particular attention to flaking paint or acid leaking from the battery.
- Check that all bolts, screws, connections and hoses fit tightly, that there are no oil leaks, and that no electrical connections have become damaged or disconnected.
- Check the arms, boom, jib and platform: there should be no visible damage, no traces of wear or deformation.

- Check that there are no leaks, traces of wear, blows or scratches, rust or foreign bodies on the cylinder rods.
- Check that there are no leaks from the wheel reducing gears.
- Pump and hydraulic unit: no leaks, all components tight.
- Check that the reducing gears have not become disconnected.
- Check the tightness of the wheel nuts and the extent of tyre wear.
- Check that the battery terminals are clean and tight: if they become loose or corroded, power may be lost.
- Check the electrolyte level in the batteries: the level should be approximately 10 mm above the plates; add distilled water if necessary.

Caution!
Follow the safety instructions supplied by the battery manufacturer

- Check that the main control panel power cable is in good condition.
- Check that the emergency stops work correctly.

Caution!
This type of machine is not insulated and must not be used close to electricity lines.

- Check that the air filter is clean - see motor manual.
- Check levels of:
  - motor oil: gauge (Ref.1 Photo 4, page 35), top up if necessary (see motor manual).
  - hydraulic oil (boom Photo 5, page 35) top up if necessary by filling via the cap (1). (see Chap. 5.3.3.1, page 46).
  - diesel level: the min. and max. levels can be checked when the cover is closed, using the two light indicators. Top up if necessary (cap Ref.2 Photo 5, page 35).

Caution!
To top up fluid levels, use only the products recommended in the consumables chapter.

- Check the hydraulic filter clogging indicator (Ref. 2 Photo 4, page 35). If the red indicator is visible, replace the filter cartridge ref. 3 (see Chap. 5.3.3, page 46).
- Check that the tilt detector (Ref.19 Photo 2, page 33) is working correctly by angling the support plate. Beyond an angle of 5°, an alarm should sound.

Photo 4

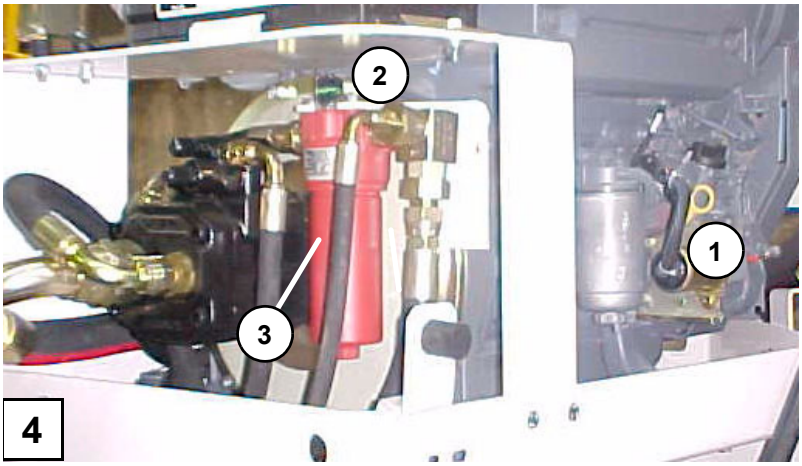

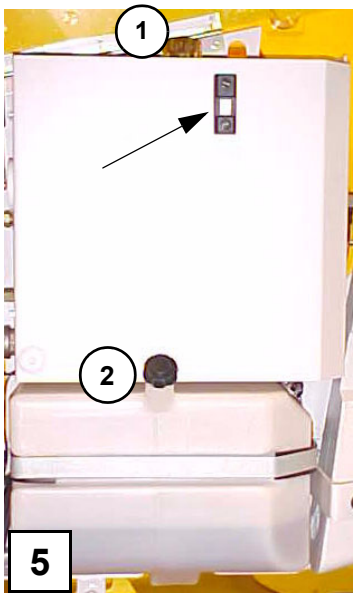

Photo 5

- Turntable locking pin:
  - Ensure that the locking pin (Ref. 1 Photo 6, page 36) for turntable rotation is removed.

Caution!
When transporting the machine, it is vital to block the turntable using the rotation locking pin situated under the turntable ***(Photo 6, page 36)***

Photo 6c

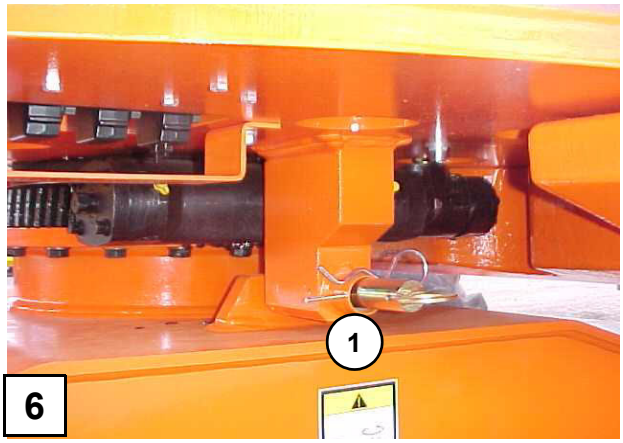

4.4 - STARTING WORK

IMPORTANT: WORK MAY ONLY BEGIN WHEN ALL OF THE INSTRUCTIONS GIVEN IN THE PREVIOUS SECTION HAVE BEEN FOLLOWED SCRUPULOUSLY.

TO BECOME FAMILIAR WITH THE MACHINE CARRY OUT THE FIRST FEW OPERATIONS AT GROUND LEVEL, KEEPING THE MACHINE IN ITS TRANSPORT CONFIGURATION: COUNTER-WEIGHT FORWARD, BOOM LOWERED.

Caution!
When the counterweight is placed above the steering wheels, the travel and steering controls act in the opposite directions.

REMINDER: The main control panel is on the platform.

In normal operating conditions, the "turntable" control panel is an emergency or rescue control station, and only used if absolutely necessary.

4.4.1 - Operations from the ground

Only the heat motor version of the machine can be used from this control station.

Motor starting: (Photo 1, page 33)

- Ensure that the emergency stop button (Ref 16) is pulled out.
- Put the operating station selection key switch (Ref 15) in the "ground control" position (pictograms). In this position, the "platform" panel controls are cancelled.
- Motor oil pressure (Ref 1) and battery charge (Ref 3) light indicators are on. The air filter clogging light indicator (Ref 4) is off.
- Press the start button (Ref 14), the motor starts, the light indicators (Ref 1 and 3) go out.

NB: If the motor does not start, switch off the ignition by pressing the emergency stop button and start the operation over again.

- Leave the motor to warm up and in the meantime check that the hour counter (Ref 12), motor and pump are working correctly.

Testing the various movements (Photo 1, page 33)

REMINDER: Always make sure that no obstacles can cause an obstruction before any operation.

- Test the lifting movement in the up and then down direction (control Ref.8).
- Test the raising movement in the up then down direction (control Ref.6)
- Stop boom lowering in the horizontal position.
- Then test the turntable rotation movements in both directions (control Ref.9) and telescoping in/out (control Ref. 5) then lower the boom completely.
- Switch to "platform" control.
- Put the key selector (Ref.15 Photo 1, page 33) in the "platform" position (green rectangle).
- Check that the tilt detector works properly (Ref.19 Photo 2, page 33).

THE COMPENSATION COMMAND IS ACTIVE BELOW A THRESHOLD OF 8.2 FT ONLY

4.4.2 - Operations from the platform (Photo 3, page 34)

- Climb into the basket, respecting the maximum load instructions. If necessary, distribute the load evenly over the whole platform.

Caution!
MAXIMUM LOAD: 230 KG.

NB: If the load in the platform exceeds the maximum authorised load, no movements are possible from the platform control station. The overload light indicator on the platform panel and the buzzer alert the operator. Load must be removed to re-enable the machine. There is no load restriction on the reach.

Control station test

- Before any operation, ensure that the green light indicator (Ref. 4) is on, indicating that machine power is on and that the selector is in the "platform" position
- Check that the emergency stop button (Ref.14) is unlocked.
- Check that the horn works.

Caution!
High speed is only availble if the machine is folded. Even if only slightly extended, only micro speed is available.

Work may now begin.

Testing the movements

- To make a movement, choose the corresponding manipulator or selector.
- Press the "fail-safe" contact and activate the required manipulator.
- The speed and angle of tilt of the manipulators enable gradual mvoement.
- If the ground is not horizontal, correct the platform position using the corresponding selector.
- Test telescoping, jib, basket rotation movements with the relevant selector.
- Test the rear axle steering movement using the selector placed on the handle of the travel manipulator. Test front axle steering movement using the selector on the platform control panel.

- Test the 2 travel speeds (in 4x2x4 version) or the 3 speeds (in 4x4x4 version) by activating the low or high speed selector in 4x2x4 version or the low, medium or high speed selector in 4x4x4 version.
- Movement direction is indicated by the blue arrows.

4.5 - BUILT-IN GENERATOR (OPTION)

Caution!

Do not expose the built-in generator to direct contact with a jet of water or a high pressure cleaner.

(See photo Built-in generator and socket in the basketr, page 38)

The built-in generator enables voltage supply (220V or 110V depending on the option chosen) in the platform to enable connection of a tool, with maximum power 3 KW.

Photo 7:Built-in generator and socket in the basketr

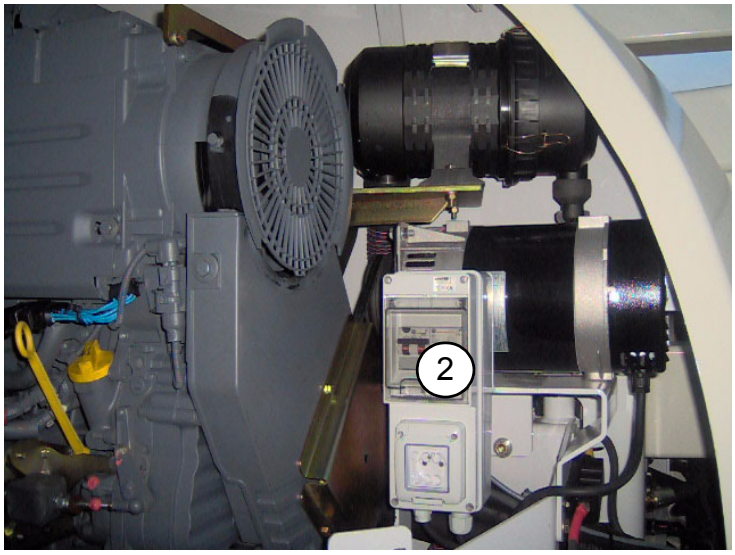

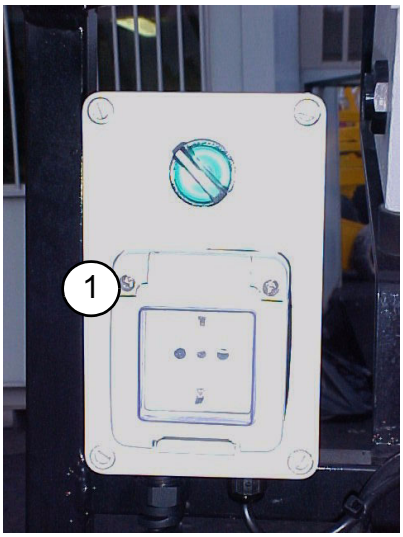

4.5.0.1 -Instructions:

- Switching on the built-in generator:
  - Activate the circuit breaker (Ref 2 , Photo :Built-in generator and socket in the basketr, page 38)
  - Put the selector is in the "platform" position (green circle)
  - Put the button above the power socket in the ON position and the button's green light indicator comes on (Ref. 1, See photo Built-in generator and socket in the basketr, page 38).
  - Connect the tool to the socket.
  - At any time, you can change the tool.

NOTA: When using the built-in generator, you cannot make any machine movements. To make a movement, you must switch off the built-in generator (see instructions below).

- Switching off the built-in generator:
  - Disconnect the tool from the socket.
  - Put the button above the power socket in the OFF position and the green light indicator goes out (Ref. 1, See photo Built-in generator and socket in the basketr, page 38).
  - Movement is active once again, you can make any movements.

Caution!

Use of the emergency unit is exclusively reserved for rescuing personnel if the main hydraulic power supply fails. Any other use may cause damage

4.6 - EMERGENCY OPERATION WITH THE STANDBY ELECTROPUMP UNIT

Photo 8:Emergency control

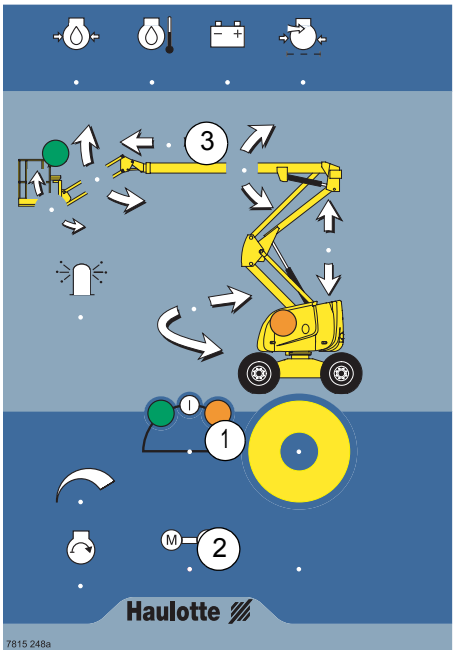

Movements can be controlled when the main energy source malfunctions. There is an electropump unit powered by the starter battery. This unit can be controlled from either the turntable control panel or the platform control panel.

The emergency standby electropump control operates in the same way from both control panels.

- Instructions:
  - Select the control panel you want to validated (orange or green), (Ref 1, Photo :Emergency control, page 39)
  - Activate and hold down the emergency control switch (Ref 2, Photo :Emergency control, page 39)
  - Actvate and hold down the switch corresponding to the movements required (Ref 3, Photo :Emergency control, page 39).

4.7 - RESCUE OPERATION

If the machine is working normally, but the operator in the platform becomes unable to return the platform to the ground, an operator at ground level may do so:

- Switch the selection key (ref. 13 , Photo :, page 33) to the "turntable" position.
- Control the movements required using the controls corresponding to normal operation.

4.7 - UNCOUPLING

It is possible to uncouple the reducing gears on the drive wheels to be able to tow the machine if it breaks down.

Caution!
In this configuration, the machine is no longer braked.

Caution!
To tow the machine, it is essential to use a rigid bar and not to exceed 5 kph.

Uncoupling procedure:

- Unscrew the 2 screws with a 11 wrench (Photo 14, page 40).

Photo 14

- Turn over the part and screw up again. The reducer is on free wheel (Photo 15, page 40).

Photo 15

Caution!
The coupling of gear motors must be carried out by competent operators.

Caution!
This operation is to be carried out on even ground.

Caution!
As long as the 4 gear clutches are not in place, the machine does not slow down properly.

Coupling procedure:

Proceed in the opposite order from the uncoupling procedure.

NOTA : Handling is facilitated when it is carried out with 2 people

5 - MAINTENANCE

5.1 - GENERAL RECOMMENDATIONS

The maintenance operations described in this manual apply when the machine

is used in ordinary conditions.

Under difficult conditions: extreme temperatures, high humidity, a polluted atmosphere, high altitude, etc., some of these operations should be carried out more frequently and special precautions should be taken.

For more details check the motor manufacturer's manual and consult your local PINGUELY-HAULOTTE agent.

Only qualified and competent personnel may carry out interventions on the machine and safety instructions relating to personnel and environment protection must be respected.

As far as the motor is concerned, refer to the manufacturer's manual and instructions.

Regularly check proper operation of the safety mechanisms:

- Tilt detector: buzzer + stop (travel, boom lifting, arm lifting and telescope out movements disabled).
- Platform overload : The overload system is set so that it trips before 120% permitted load.
- High speed unavailable (or medium speed for the 4x4 model) if the boom is raised, arm is lifted, telescope is out.

CAUTION:

- **Do not use the machine as a welding earth.**
- **Do not weld without disconnecting the (+) and (-) terminals of the batteries.**
- **Do not use to jumpstart other vehicles.**

5.2 - MAINTENANCE PLAN

The plan (following page) shows the frequency and area of maintenance and the consumables to be used.

The reference shown in the symbol shows the area maintained based on the frequency.

The symbol represents the consumable to use (or the operation to be carried out).

Consumable	Specification	Symbol	Lubricants used by Pinguely-Haulotte	ELF	TOTAL
Motor oil	SAE 15W40		SHELL / RIMULA		
Gearbox oil	SAE 90		ESSO EP 80 W 90	Tranself EP 80 W 90	TM 80 W/90
Hydraulic oil	AFNOR 48602 ISO VG 46		BP SHF ZS 46	HYDRELF DS 46	EQUIVIS ZS 46
Optional bio-degradable hydraulic oil	Bio ISO 46				
Lithium grease	KP 2 K		ESSO Beacon EP2	Epaxa 2	
Lithium grease	NLGI 2 EP		ESSO Moly Multi-Purpose Grease	Cadrexa GR1 AL	
Lead-free grease	Grade 2 or 3		ESSO GP GREASE	Multimotive 2	Multis EP 2
Exchange or specific operation					

HOURS

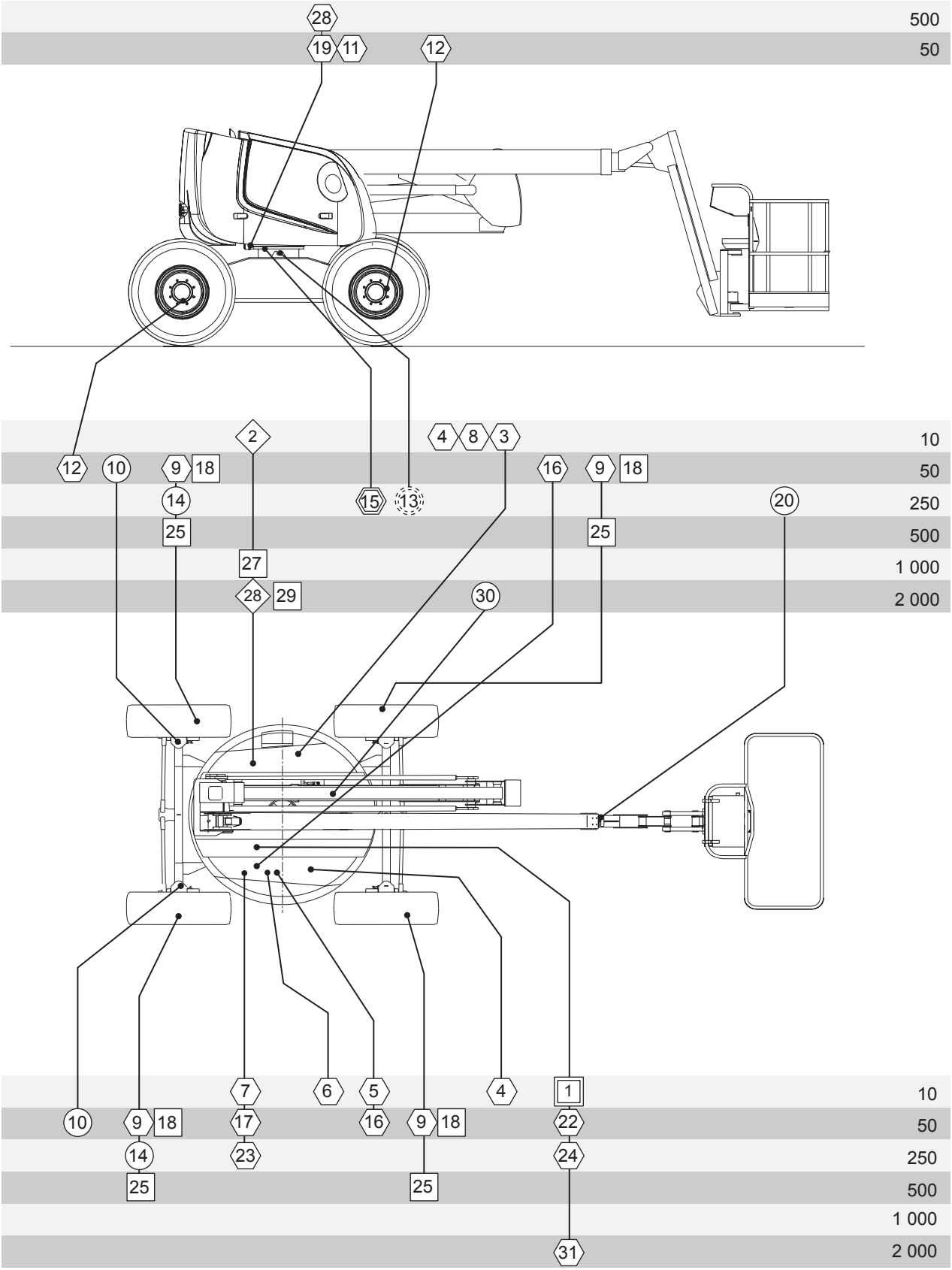
28
19
11
12
500
50
2
4
8
3
10
12
10
9
18
16
9
18
50
14
15
13
20
250
25
25
500
27
1 000
28
29
30
2 000
7
6
5
4
1
10
10
9
18
17
16
9
18
22
50
14
23
24
250
25
25
500
1 000
31
2 000

5.3 - OPERATIONS

5.3.1 - Summary table

FREQUENCY	OPERATIONS	REF
Every day or before each use	• Check the levels: - motor oil - hydraulic oil - diesel • Check cleanliness: - diesel pre-filter, replace if water or impurities are found - motor air filter - machine (particularly check the tightness of connectors and hoses), also check the condition of tyres, cables and all accessories and equipment. • Check hydraulic oil filter clogging. If the clogging indicator is visible, change the cartridge.	 1 2 3 8 5 6 7
Every 50 hours	Motor: see manufacturer's manual • Grease: - wheel pivot axles: 2 x 2 points - turntable rotation locking pin • Check the diesel pre-filter, replace if water or impurities are found • Check the level of the drive wheel reducing gears (see Chap. 5.3.3.2, page 46) CAUTION: after the first 50 hours: • Change the hydraulic filter cartridge (see 250 hour freqeuncy) • Empty the drive wheel reducers (see 500 hour frequency) - 2 points for the 4x2 model - 4 points for the 4x4 model • Check the tightness: - of slew ring screws (torque 21,5 daNm) - of wheel nuts (torque 32 daNm)	22 10 11 16 9 17 18 19 12
Every 250 hours	Motor: see manufacturer's manual • Change the hydraulic filter cartridge • Grease: - bearings of the steering wheels 4x2 (remove the cap) - slew ring bearing path (rotate during the operation) 2 points - friction parts of the telescope (spatula) - teeth of the slew ring (using a brush) • Check condition of rings (condition and positioning) and exchange them if damaged or broken. • Check 'wear and tear' indicator of the telescope feet; to be replaced if indicator not visible.	24 23 14 13 20 15
Every 500 hours	Motor: see manufacturer's manual • Empty wheel reducing gears • Refill with oil: capacity 2 x 0.7 l for the 4x2 - 4 x 0.7 l for the 4x4 • Ring screws: check tightness and tighten if necessary	 25 28
Every 1000 hours or every year	Motor: see manufacturer's manual • Empty: hydraulic oil tank	 27
Every 2000 hours	Motor: see manufacturer's manual • Empty: hydraulic oil tank and whole circuit • Empty and clean the diesel tank • Grease: rotation reducing gear: 1 point	31 28 29 30
Every 3000 hours or every 4 years	• Check: - the state of telescoping friction pads - the state of electric cables, hydraulic hoses, etc	

REMINDER: The above frequencies should be reduced if work is carried out in difficult conditions (consult After Sales Service if necessary).

5.3.2 - Tightening torques of the screws of crowns of orientation

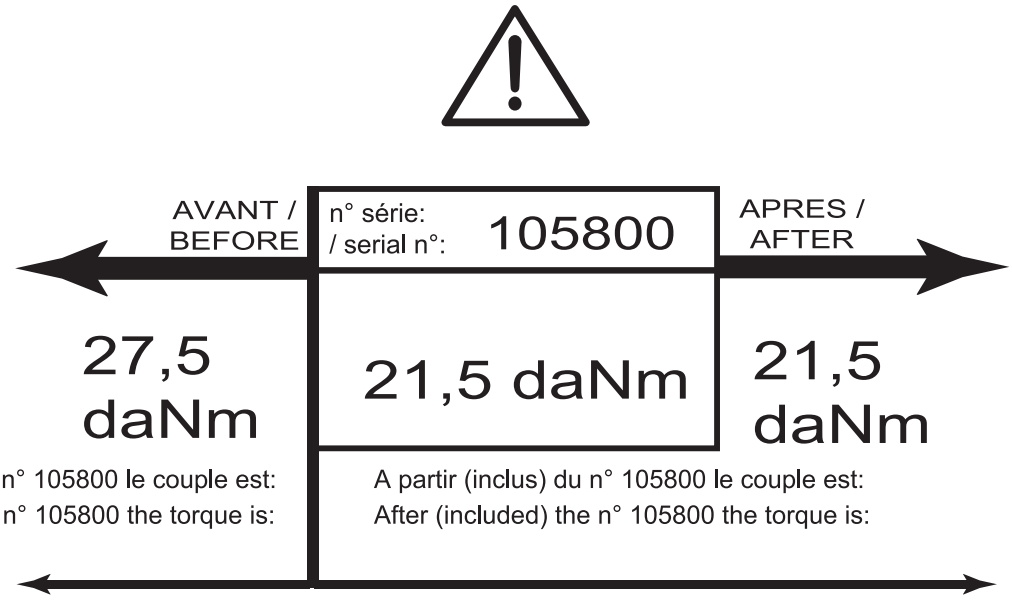

5.3.3 - Operating Instructions

IMPORTANT:

ONLY USE THE LUBRICANTS RECOMMENDED IN THE TABLE IN CHAP. 5.2, PAGE 42 FOR FILLING AND GREASING OPERATIONS.

COLLECT THE WASTE OIL AFTER DRAINAGE TO PREVENT POLLUTION.

5.3.3.1 -Hydraulic oil filter

Photo 16

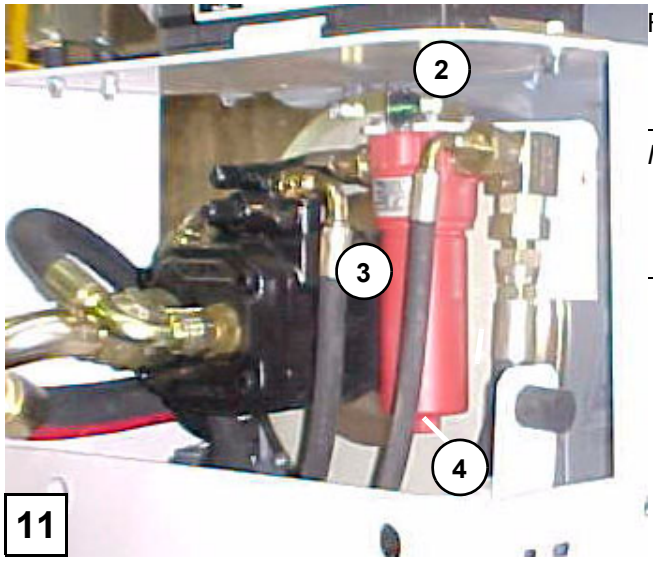

Filter with clogging indicator.

- Change the cartridge (Ref 3) if the clogging indicator is visible (Ref 2).

NB: *Clogging must be checked when the machine is warm, if cold, the indicator may be visible because of oil viscosity.*

- Unscrew the base nut (Ref 4) and remove the cartridge
- Screw the new cartridge into place.

Caution!

Before disassembling, make sure that the oil circuit is no longer pressurised and that the oil is not too hot.

5.3.3.2 - Drive wheel reducing gears

Photo 17

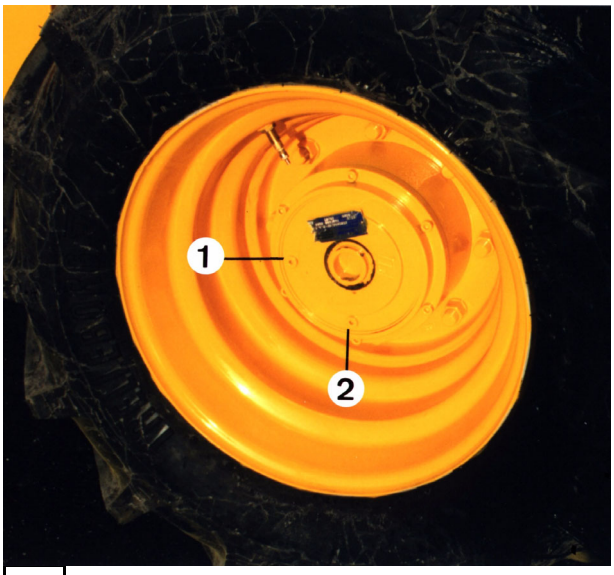

The wheel must be dismantled for checks and drainage. To do so, immobilise the machine and lift using a jack or a hoist.

https://truckmanualshub.com/

Caution!

Check that the machine is correctly secured and that the lifting equipment is of sufficient capacity and in good condition.

Fluid level check:

- turn the wheel so that one cap is on a horizontal line (1) and one cap (2) is on a vertical line
- unscrew the cap (1) and check the fluid level which should reach the hole, add more if necessary.
- screw the cap back on.
- Draining:
  - In the same position, unscrew both caps and let the oil drain out.
  - Fill as described above.
  - Screw the caps back on.

5.3.4 - List of consumables

- Hydraulic filter cartridge
- Air filter element
- Diesel pre-filter
- Diesel filter - motor oil filter.

6 - OPERATING INCIDENTS

REMINDER: Following the safety and maintenance instructions should enable you to avoid most of these incidents. Nevertheless, if an incident does occur, it is vital to check if it is listed in table below before carrying out any intervention. If so, simply follow the instructions. If it is not listed, contact the PINGUELY-HAULOTTE agent or the plant's PINGUELY-HAULOTTE After Sales department.

Before diagnosing a failure, check that:

- the fuel tank is not empty,
- the batteries are properly charged,
- the turntable and platform "palm button" emergency stop buttons are unlocked,
- the relays (platform control panel - turntable box) are correctly pushed into their compartments.

INCIDENTS	PROBABLE CAUSE	SOLUTION
The motor does not start or stops	• Empty diesel tank • Defective fuse on printed circuit (in electric box) • "Palm button" pushed in • Motor in "safety" mode: oil pressure, overheating, alternator charging, air filter clogged • Charging light indicator bulb blown • Air filter clogging light indicator on • Defective motor safety relay • Loose contact between battery cables and terminal	• Fill the tank • Replace defective fuses • Reset • See manufacturer's manual or contact After-sales • Change the bulb • Change the cartridge • Replace the relay • Unscrew and clean the terminals
Insufficient pressure or power at the pump	• Clogged air filter • Motor regime insufficient • Oil leak on connector, hose, component • Clogged oil filter	• Change the filter. • Adjust the speed (contact After-sales) • Repair or replace (contact After-sales) • Replace the oil filter cartridge
No movement from the platform	•Turntable key selector in the wrong position • Overload in the platform • "Fail-safe" safety system not activated • Manipulator operating fault • Selected movement electrovalve fault • Insufficient hydraulic oil • Tilt or slope > 5° up lifting movement disabled	• Put in the platform position • Remove load • Press the "fail-safe" contact and hold down during movement • Replace manipulator (see After-sales) • Replace the electrovalve or its coil • Top up • Lower the arms and boom to reset
No high speed	• Platform slightly extended	• Lower the arms and boom completely
No steering movement	• Insufficient hydraulic oil • "Fail-safe" safety system not activated	• Top up • Press the "fail-safe" contact and hold down during movement
No travel, telescope out, boom lifting, arm lifting + buzzer sounding	• Slope or tilt >5°	• First retract the telescope then lower the boom to reset
The turntable does not turn	• The locking pin is engaged in the chassis	• Remove the pin
Noisy hydraulic pump	• Insufficient oil in the tank	• Top up
Hydraulic pump cavitation	• Oil viscosity too high	• Empty the circuit and replace with the recommended oil
No adhesion on one drive wheel	• Insufficient load on one wheel	• Act on the blocking button

https://truckmanualshub.com/

INCIDENTS	PROBABLE CAUSE	SOLUTION
Buzzer sounding	• Tilt or slope > 5° • Platform load close to limit • Hydraulic oil temperature too high	• Reset by retracting the telescoping and lowering the boom • Remove load • Leave to cool
The electropump does not work	• Open battery circuit breaker • Defective fuses	• Close the battery circuit breaker • Replace the fuses

NB: In the turntable box, LEDS indicate the state of each output to check that it is activated.

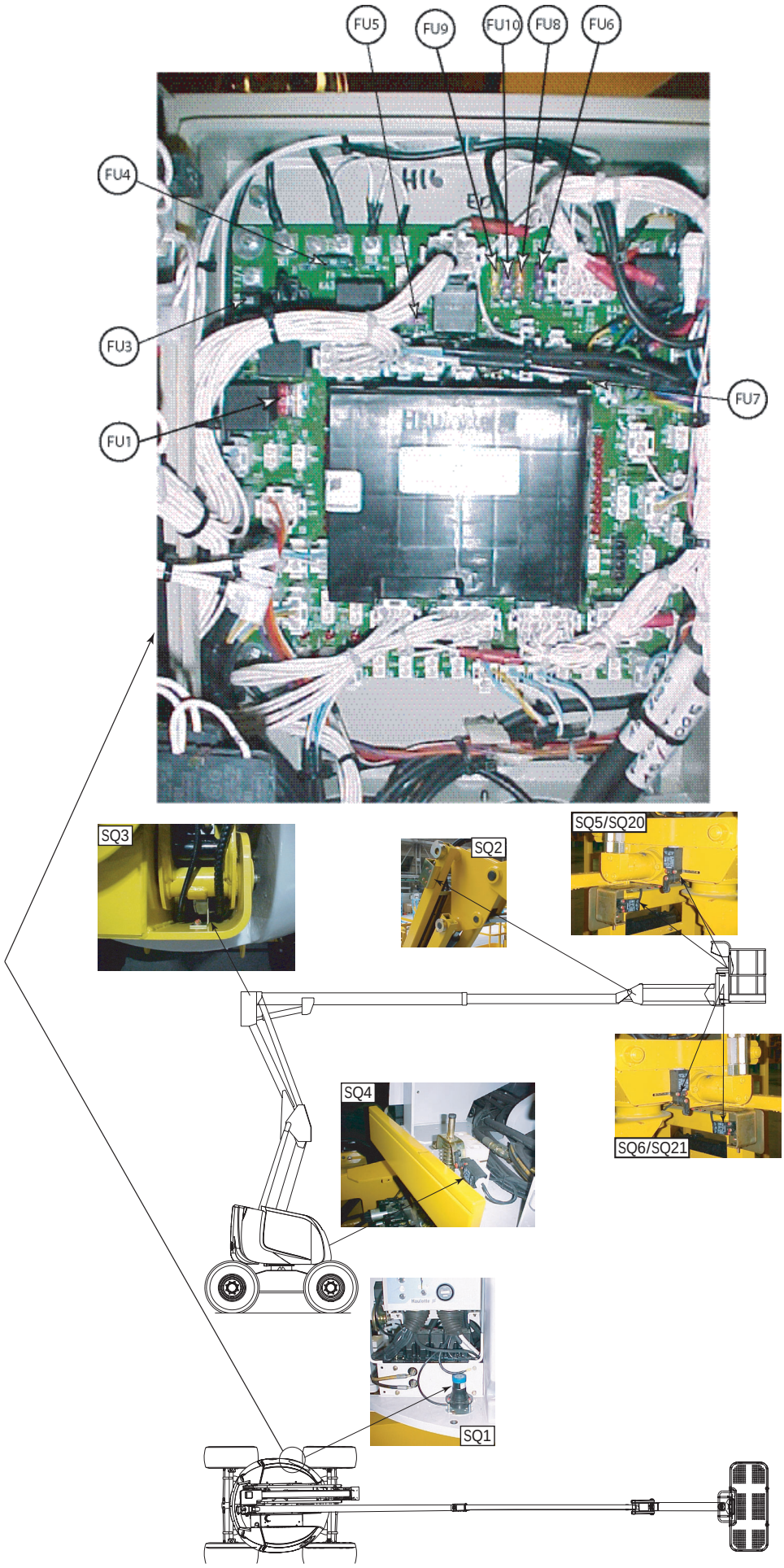
FU5
FU9
FU10
FU8
FU6
FU4
FU3
FU1
FU7
SQ3
SQ2
SQ5/SQ20
SQ4
SQ6/SQ21
SQ1

7 - SAFETY SYSTEMS

7.1 - FUNCTION OF RELAYS AND FUSES IN THE TURNTABLE BOX

(see wiring diagram)

KA2	Heat motor start	FU3–80 A	Accelerator circuit fuse
KP1	Heat motor stop	FU4–30 A	Main circuit fuse (motor)
KT2	Movement acceleration (electromotor)	FU5–3 A	Turntable movement control circuit fuse
KMG	Mains power	FU6–3 A	Platform movement control circuit
KA32	Battery-converter switching	FU7–20 A	Electrovalve supply circuit fuse
KA37	Converter supply	FU8–5 A	Turntable / platform control circuit fuse
KM1	Motorpump unit no. 1 control (bi-energy)	FU9–20 A	Accessory circuit fuse
KM2	Motorpump unit no. 2 control	FU10–3 A	Circuit fuse
FU1–10 A	Motor stop circuit fuse	FU11–250 A FU12–125 A	Electropump no. 1 circuit fuse Electropump no. 2 circuit fuse

7.2 - FUNCTION OF SAFETY CONTACTS

(see wiring diagram)

QS1	Battery circuit breaker	SQ3	Tilt reset if machine folded (boom)
SB1	Palm button emergency stop (turntable)	B1	Air filter contact. Motor cut off if clogged air filter
SB2	Palm button emergency stop (platform)	B2	Motor temperature contact. Motor cut off if temperature too high
SQ1	Tilt detector, disables arm lifting, boom lifting, telescoping, jib lifting and travel movements by breaking	B3	Oil pressure contact. Motor cut off if insufficient pressure
SQ4	Tilt reset if machine folded (arms)	B4	Hydraulic oil temperature contact. Audible alert if temperature too high
SQ5	overload.	SQ20	basket rotation
SQ6	overload - break Disables all movements from the platform	SQ21	basket rotation
SQ2	Jib contactor >0°		

8 - WIRING DIAGRAMS

8.1 - DIAGRAM E 598 - FOLIO 01/05

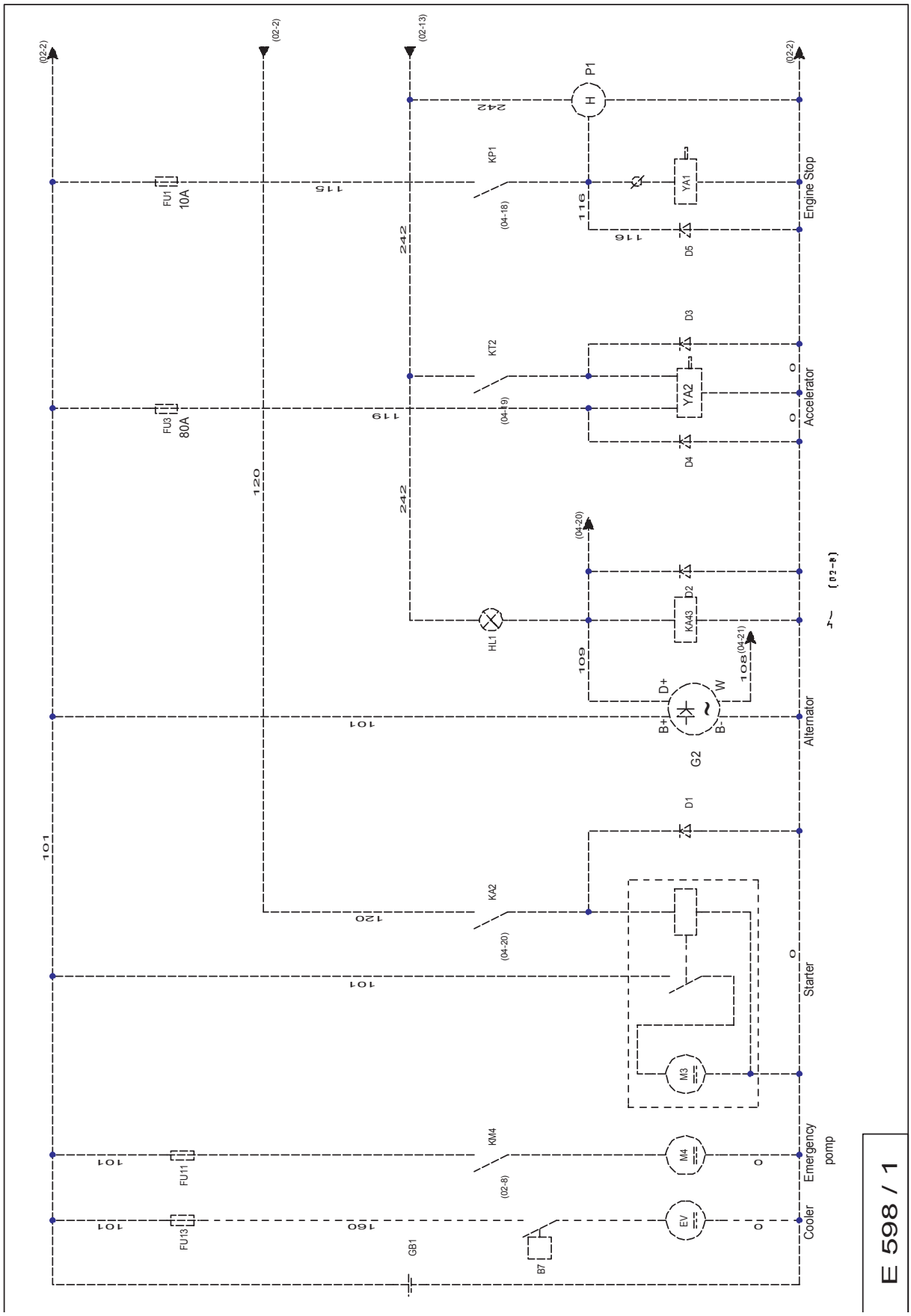

FOLIO 02/05

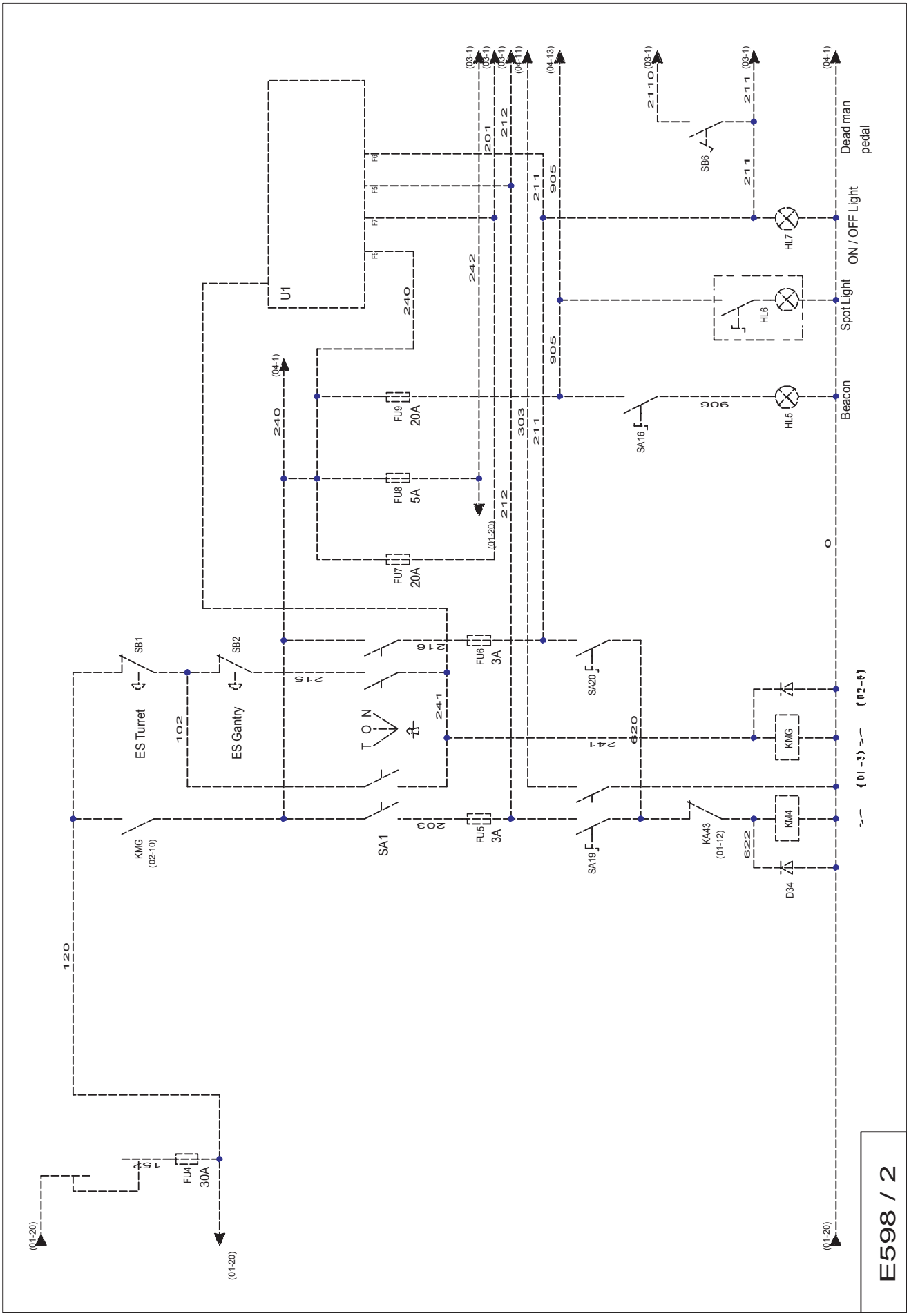

E598 / 2

FOLIO 03/05

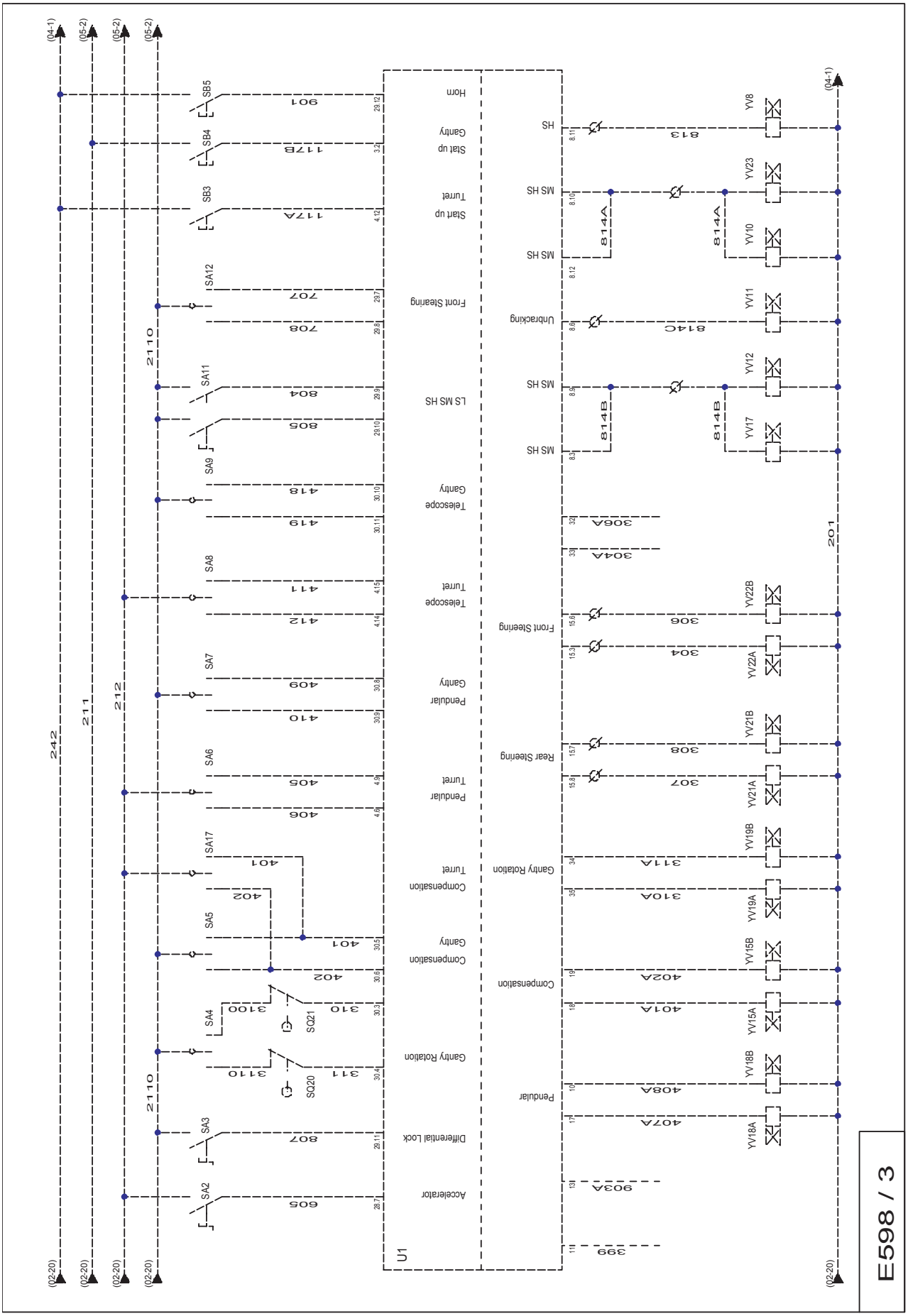
(04-1)
(05-2)
(05-2)
(05-2)
(02-20)
(02-20)
(02-20)
(02-20)
242
211
212
2110
2110
SB5
SB4
SB3
SA12
SA11
SA9
SA8
SA7
SA6
SA17
SA5
SA4
SA3
SA2
901
117B
117A
707
708
804
805
418
419
411
412
409
410
405
406
401
402
3100
310
3110
311
807
605
SQ21
SQ20
Horn
Stat up Gantry
Stat up Turret
Front Steering
LS MS HS
Telescope Gantry
Telescope Turret
Pendular Gantry
Pendular Turret
Compensation Turret
Compensation Gantry
Gantry Rotation
Differential Lock
Accelerator
U1
HS
MS HS
MS HS
Unbracking
MS HS
MS HS
Front Steering
Rear Steering
Gantry Rotation
Compensation
Pendular
813
814A
814A
814C
814B
814B
306A
304A
306
304
308
307
311A
310A
402A
401A
408A
407A
903A
399
YV8
YV23
YV10
YV11
YV12
YV17
YV22B
YV22A
YV21B
YV21A
YV19B
YV19A
YV15B
YV15A
YV18B
YV18A
201
E598 / 3

FOLIO 04/05

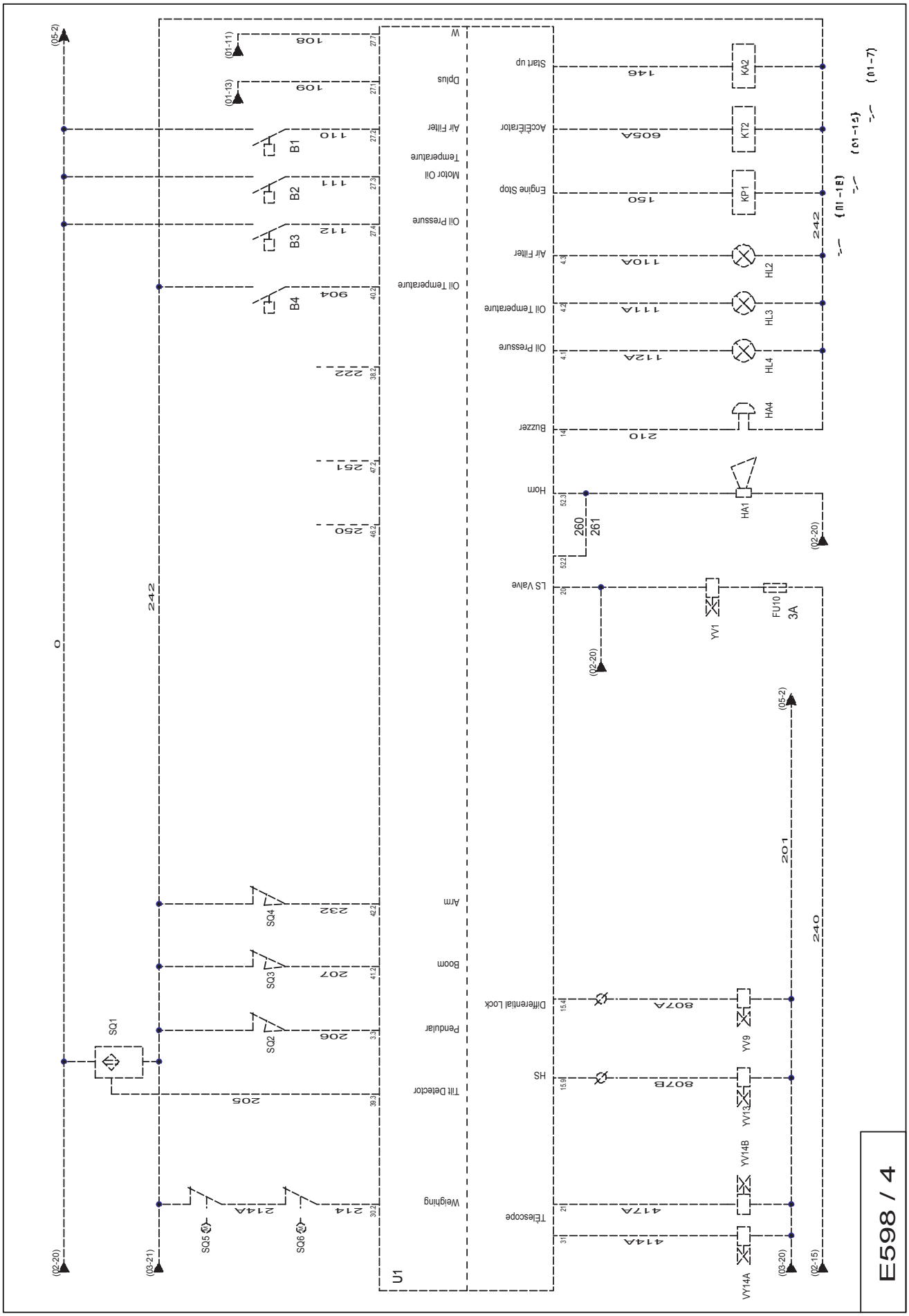

E598 / 4

FOLIO 05/05

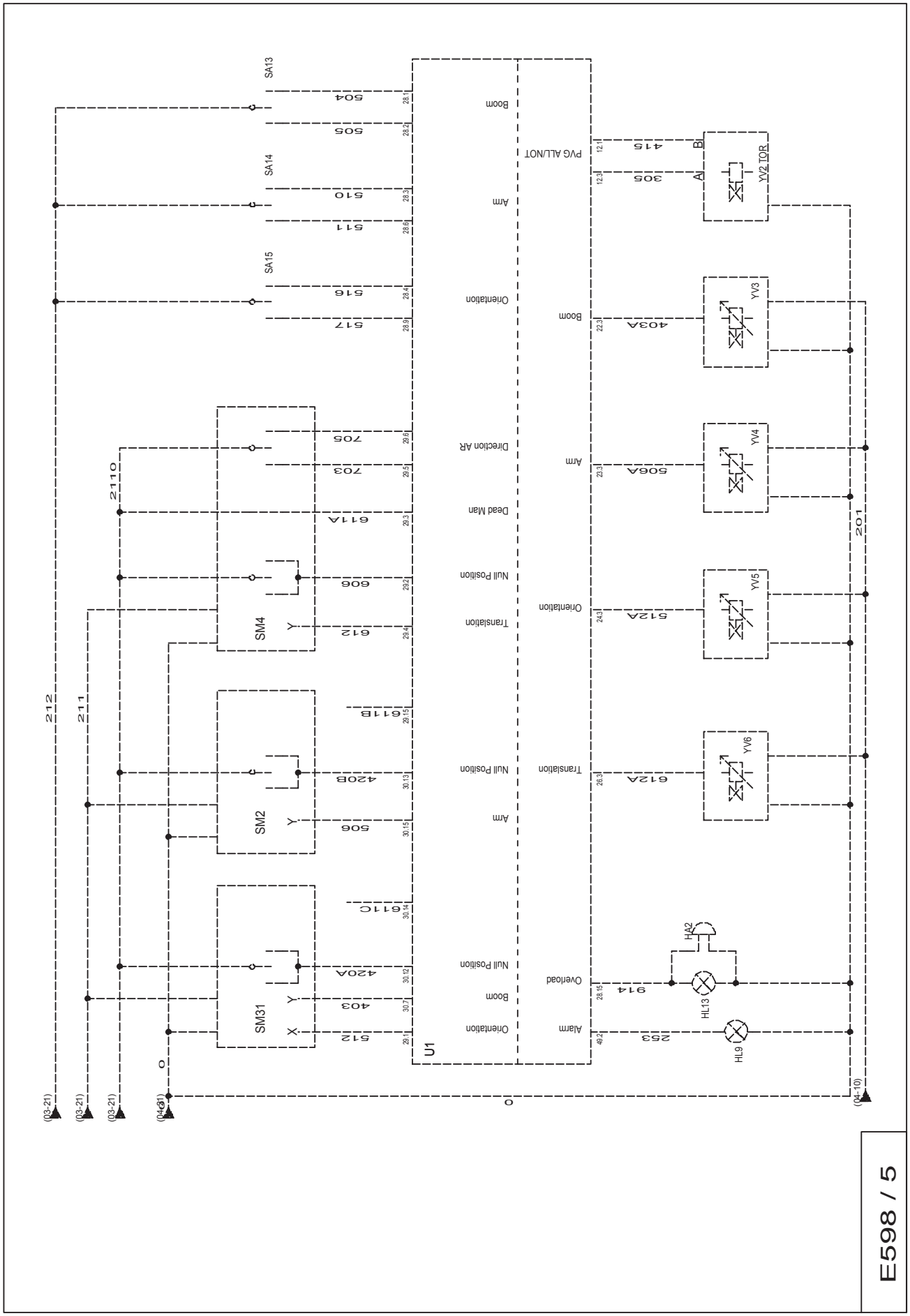

E598 / 5

9 - HYDRAULIC DIAGRAMS
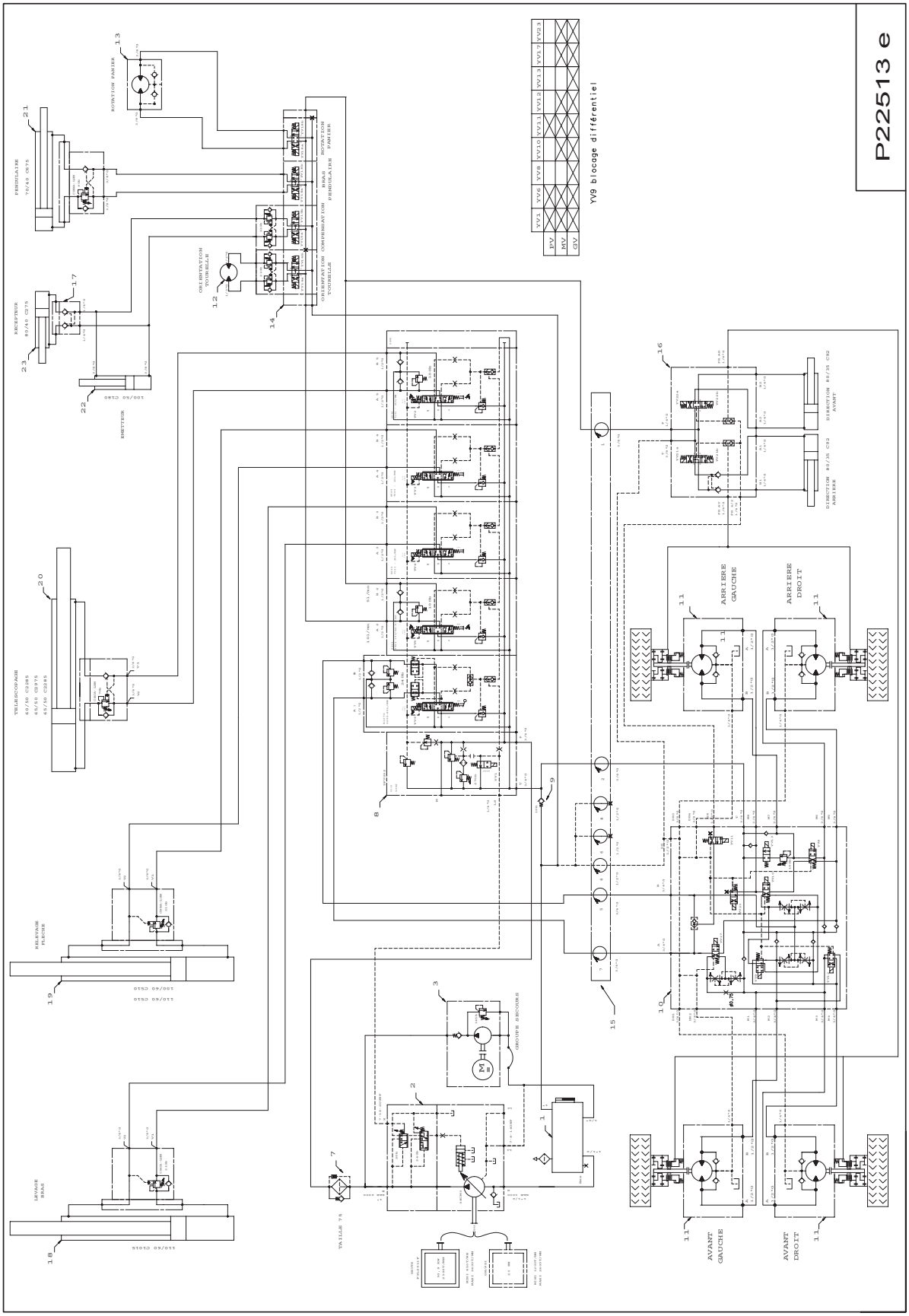
9.1 - DIAGRAM HA16/18PX REFERENCE P22513