https://truckmanualshub.com/

MANISCOPIC

MRT 1742
M Series

- Lift height : 17.30 m
- Max. reach : 14.50 m
- Engine : 101 HP - 74.5 kw
- 4 wheel drive - 4 wheel steer
- Hydrostatic transmission

MANITOU

https://truckmanualshub.com/

MRT 1742 M Series

ROTATION ON STABILISERS FULLY EXTENDED WITH FORKS

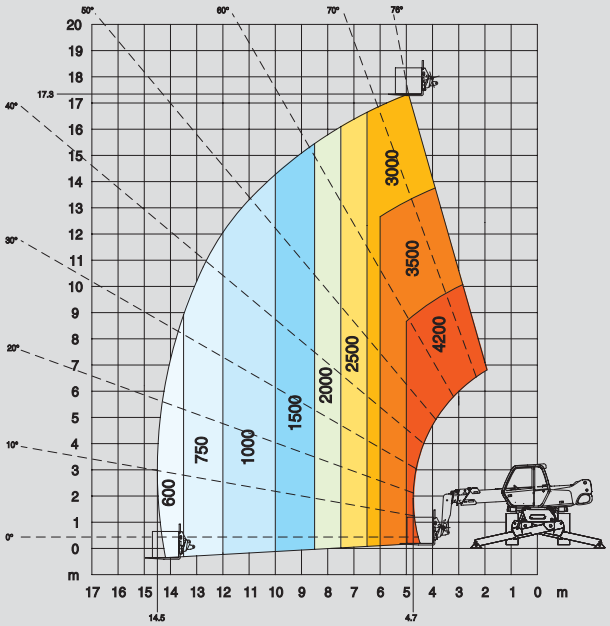

FRONTAL POSITION ON WHEELS WITH FORKS

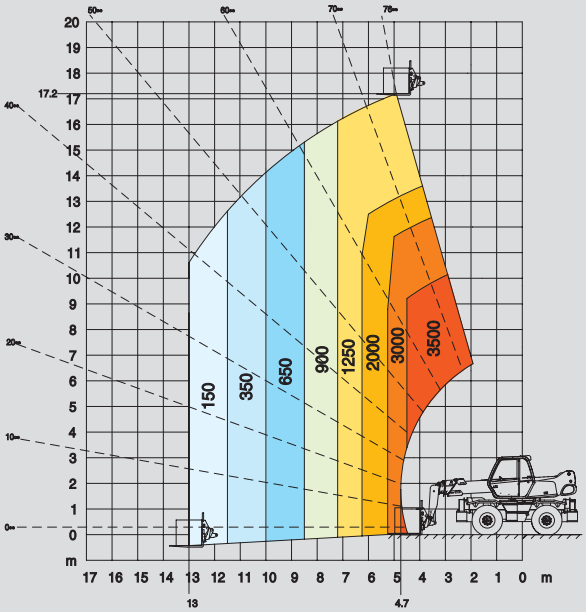

ROTATION ON STABILISERS NOT FULLY EXTENDED WITH FORKS

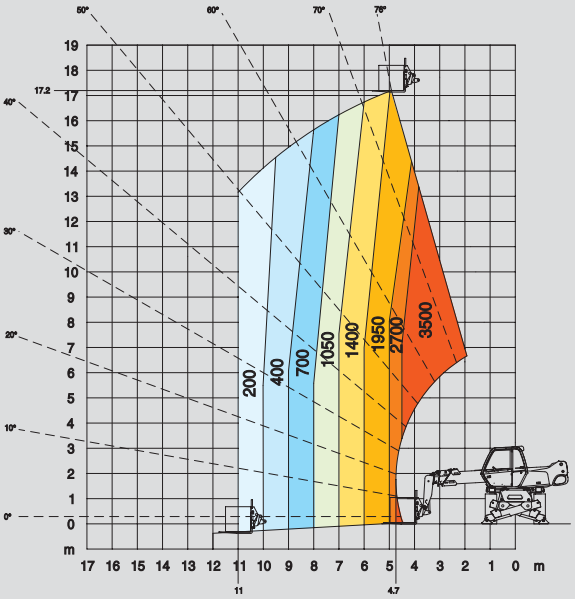

ROTATION ON STABILISERS FULLY EXTENDED WITH 5T WINCH

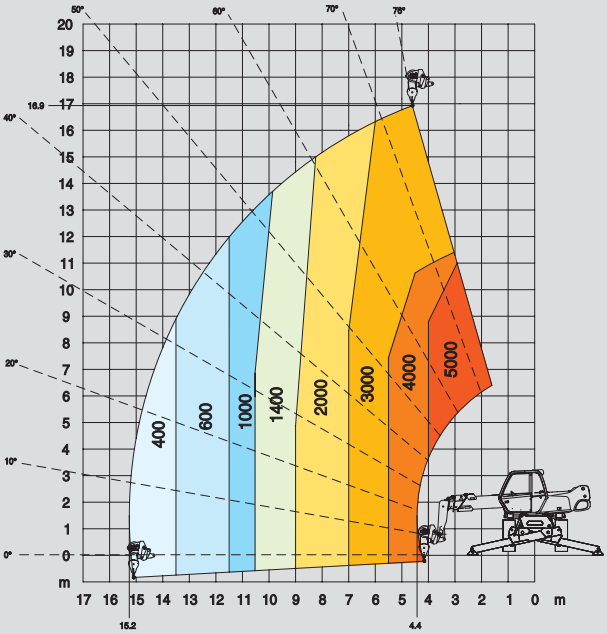

ROTATION ON STABILISERS FULLY EXTENDED WITH JIB P 600

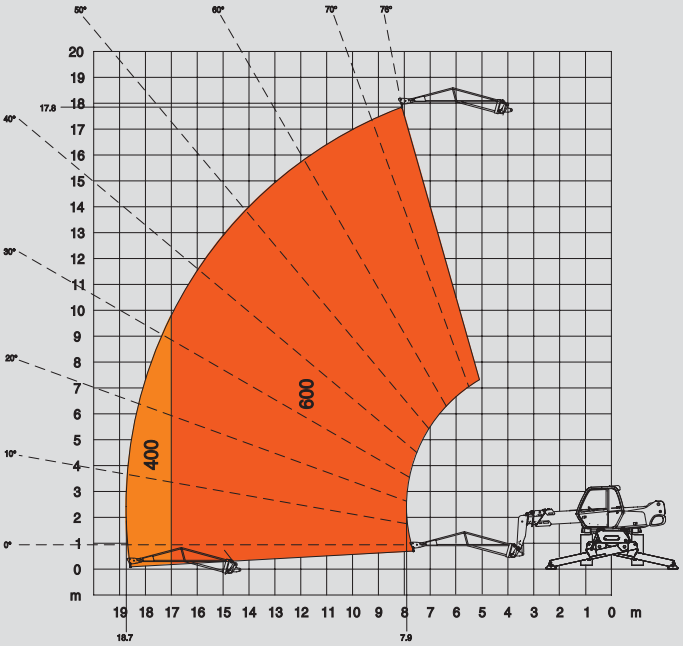

ROTATION ON STABILISERS FULLY EXTENDED WITH JIB P 1500

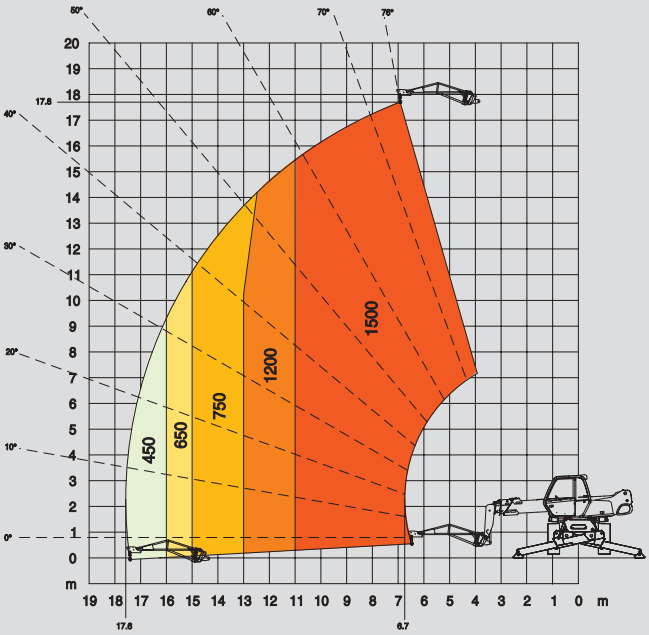

https://truckmanualshub.com/

ROTATION ON STABILISERS FULLY EXTENDED WITH EXTENSIBLE PLATFORM 2,25/4 m

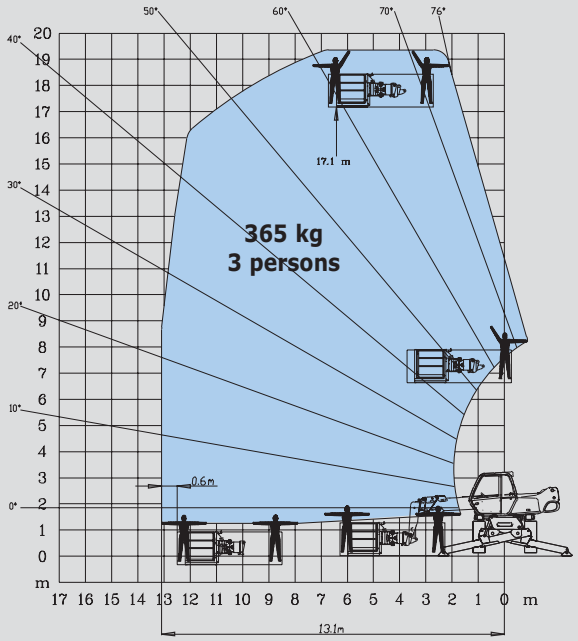

ROTATION ON STABILISERS FULLY EXTENDED WITH 1000 KG PLATFORM 2,25/4 m

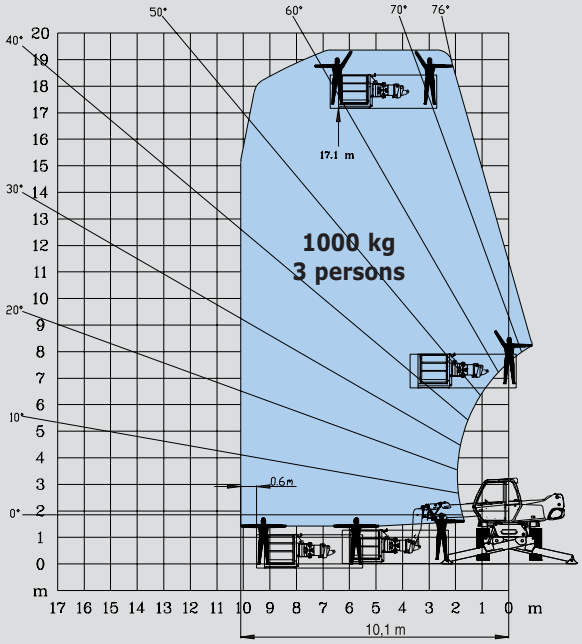

ROTATION ON STABILISERS FULLY EXTENDED WITH 3 D SYSTEM IN POSITIVE POSITION

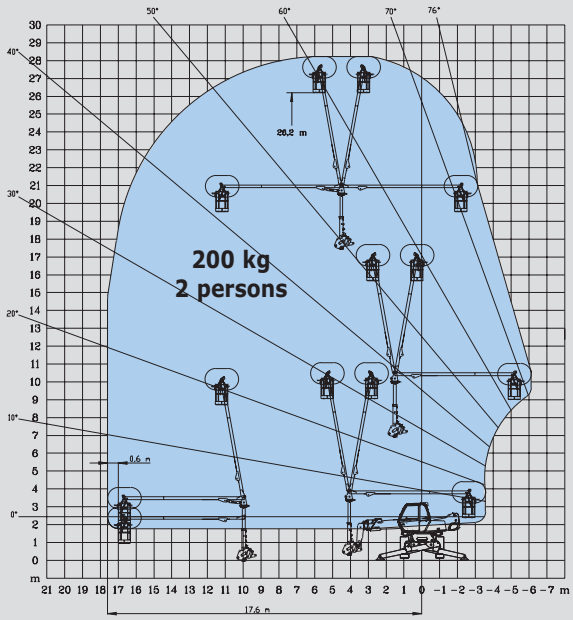

ROTATION ON STABILISERS FULLY EXTENDED WITH 3 D SYSTEM IN NEGATIVE POSITION

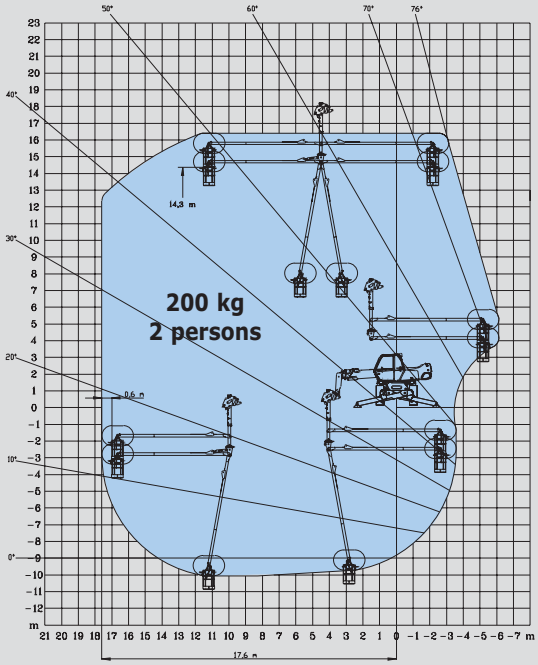

ROTATION ON STABILISERS FULLY EXTENDED WITH AERIAL JIB PLATFORM

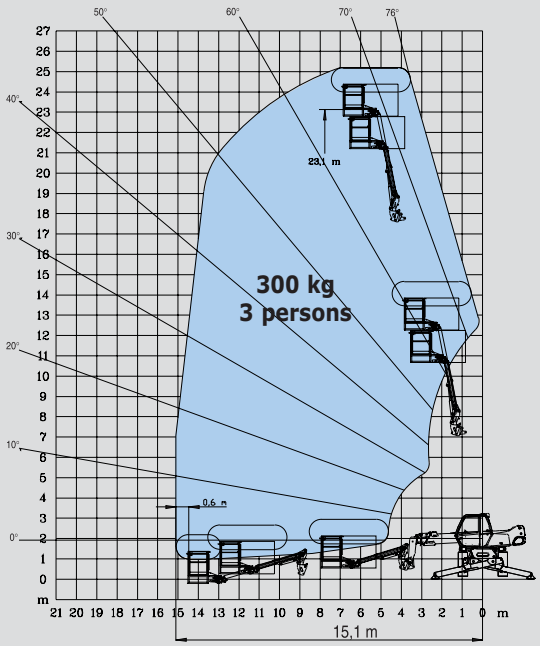

ROTATION ON STABILISERS FULLY EXTENDED WITH CRANE JIB

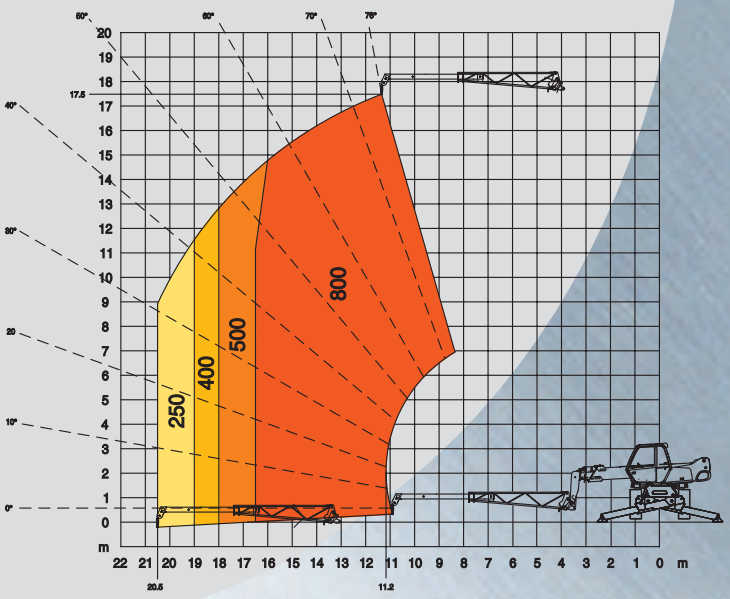

https://truckmanualshub.com/

MRT 1742 *M Series*

Lift capacity (on stabilisers) .....4200 kg
at 500 mm from forks heels

Lift height : .....17.30 m

Tyres
18 - 22,5 16 PR

Forks (mm)
Length.....1200
Width x thickness.....150 X 50

Multidisc brakes : hydraulically assisted on both axles
Negative parking brake

Engine PERKINS
Type.....1104C.44 T
Capacity.....4 cyl. 4400 cm³
Power (ISO/TR 14396).....101 HP/74.5 kw
at 2300 rpm
Water cooling
Direct injection

Transmission .....hydrostatic
With automatic power regulation (hydraulic variable displacement pump and motor)
Reversing shift .....electromagnetic
2 speed forward and reverse
Travel speed.....25 km/h

Rear axle
Automatic rear axle locking system
over 15° rotation

4 stabilisers
simultaneous or individually controlled

Rotation through 400°
Turret mounted on a double slew ring

Hydraulics
2 pumps gear type .....270 bars/115 l/mn

Control : 2 electro proportional control joysticks for all hydraulic movements

Capacities
Cooling system.....15 l.
Engine oil .....8.1 l.
Hydraulic oil .....140 l.
Fuel tank .....130 l.

Weight unladen (with forks) .....14600 kg
Overall width.....2.43 m
Overall height .....3.02 m
Overall length .....6.07 m
Ground clearance.....0.46 m
Drawbar pull.....10800 daN

Standard load moment indicator
(mobile crane standards)

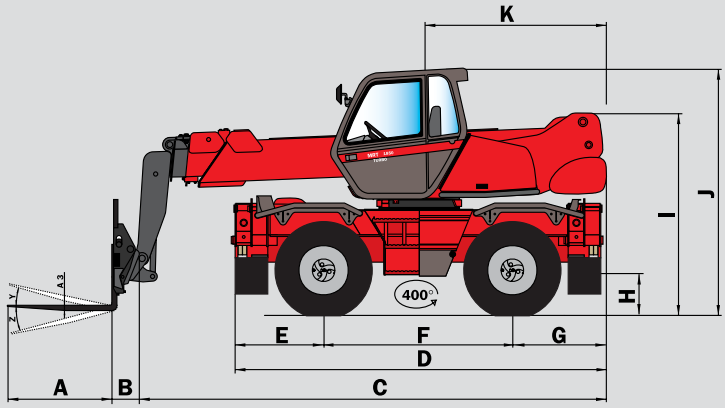

A	1200
A1	150
A2	1320
A3	50
B	290
C	5785
D	4630
E	1155
F	2320
G	1155
H	460
I	2410
J	3025
K	2040
L	1930
M	2425
N	4100
O	4500
P	200
Q	4000
R	3410
S	4100
V	950
Y	12°
Z	105°

mm

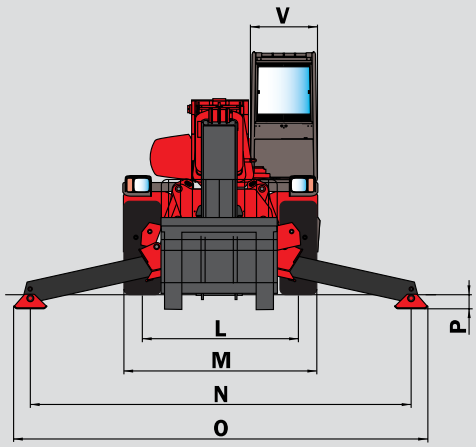

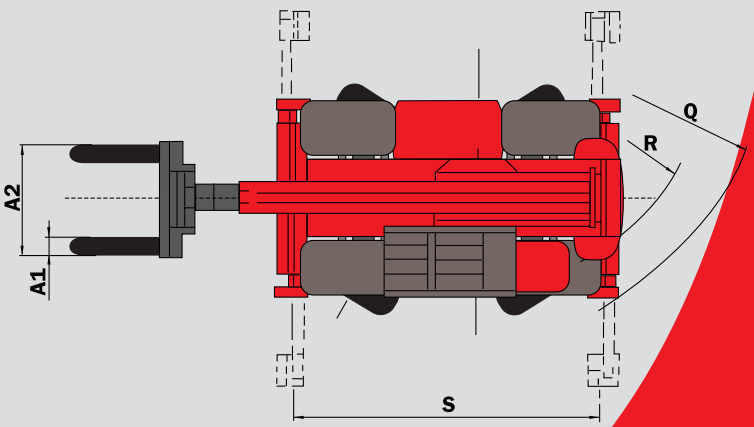

This publication in no way constitutes an offer and the company reserves the right to alter specification without prior notice.
The MANITOU models presented in this brochure can be supplied complete with optional equipment attachments.

CE

MANITOU BF SA
B.P. 249 - 44158 Ancenis Cedex - France
Tél. : 33 2 40 09 10 11 / Export Department Fax : 33 2 40 09 10 97
www.manitou.com

700037EN

MANITOU