https://truckmanualshub.com/

TCM

DIESEL POWERED
PNEUMATIC TIRE TRUCKS
6-10ton

FD60 / FD70 / FD80 / FD100

https://truckmanualshub.com/

Our new diesel engine runs cleaner and stronger!

The TCM FD60 to FD100 forklift trucks have been substantially upgraded to be more powerful, yet eco-friendly workhorses with a variety of state-of-the-art features.
They include a new type of electronically-controlled diesel engine which meets Tier-3/Stage IIIA emission control regulations, a traveling interlock system which helps ensure safe operation of the truck, and a new, easy-to-read instrument panel. The new series offer both more eco-friendliness and higher productivity, to meet the load handling challenges of today as well as tomorrow.

https://truckmanualshub.com/

ECOLOGY
COMFORT
SAFETY
ECONOMY

FD60 / FD70 / FD80 / FD100

https://truckmanualshub.com/

ECO-FRIENDLINESS

Quest for greater eco-friendliness with a greener diesel engine

Greener than ever

This environmentally friendly diesel engine emits substantially less nitrogen oxides (NOx) and particulate matter (PM).

* Diesel engine is equipped with a turbocharger and an intercooler
The rated output has been increased substantially to ensure the highest output in these truck classes, for higher productivity.
* The rated speed is as low as 2,000 rpm, making this engine more durable than ever.

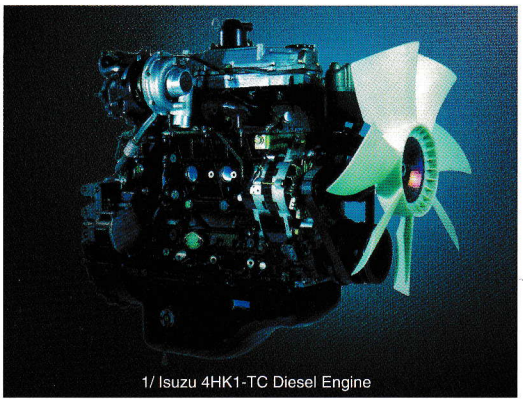

1/ Isuzu 4HK1-TC Diesel Engine

Total displacement:	Rated output:	Max. torque:
5.193cc	87.0kW at 2,000rpm (Gross)	486.7N-m at 1,500rpm (Gross)

Use of advanced engine technologies: common rail fuel injection system and electronic all speed control.

Fuel consumption has been reduced **8%**

(source: internal data)

Common rail fuel injection system

The common rail fuel injection system uses a single fuel pump to put the fuel under extremely high pressure. Then, the fuel is distributed through the common rail to each cylinder under high and consistent pressure. The injector for each cylinder is electronically controlled, to deliver precisely the optimal amount of fuel at the perfect time, to suit the engine's immediate operating conditions. Optimized fuel combustion substantially reduces the amount of pollutants in the exhaust gas. It also helps improve fuel economy and reduces engine vibration.

Note: Use only JIS K-2204 diesel fuel or equivalent; otherwise the engine may be damaged and fail.

The use of a common rail equalizes the fuel injection pressure at all cylinders.

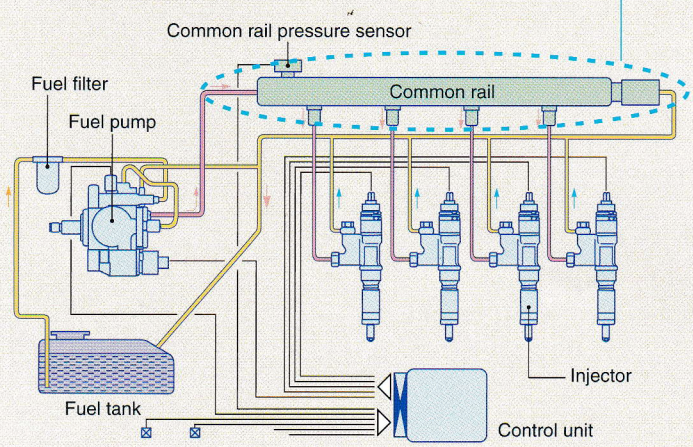

Cooled exhaust gas recirculation (EGR) system

Cooled exhaust gas recirculation (EGR) is a technique for reducing nitrogen oxide (NOx) emissions by mixing a portion of an engine's exhaust gas with the intake air to reduce the concentration of oxygen in the combustion chamber. This helps reduce the temperature during combustion, which lowers the formation of NOx. In addition, the EGR cooler reduces the exhaust temperature, while the fuel to air ratio control system uses a feedback loop to control the fuel/air mixture supplied to the engine, reducing the formation of NOx even more and improving fuel economy.

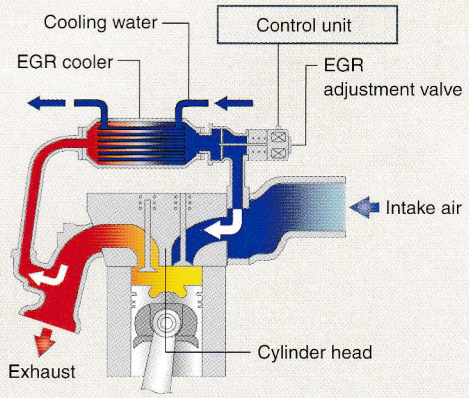

The EGR system cools part of the exhaust and mixes it with the intake air to achieve more efficient fuel combustion when the engine is running at low speeds.

https://truckmanualshub.com/

OPERATOR COMFORT

Quest for better work efficiency through advanced features

Easier operation

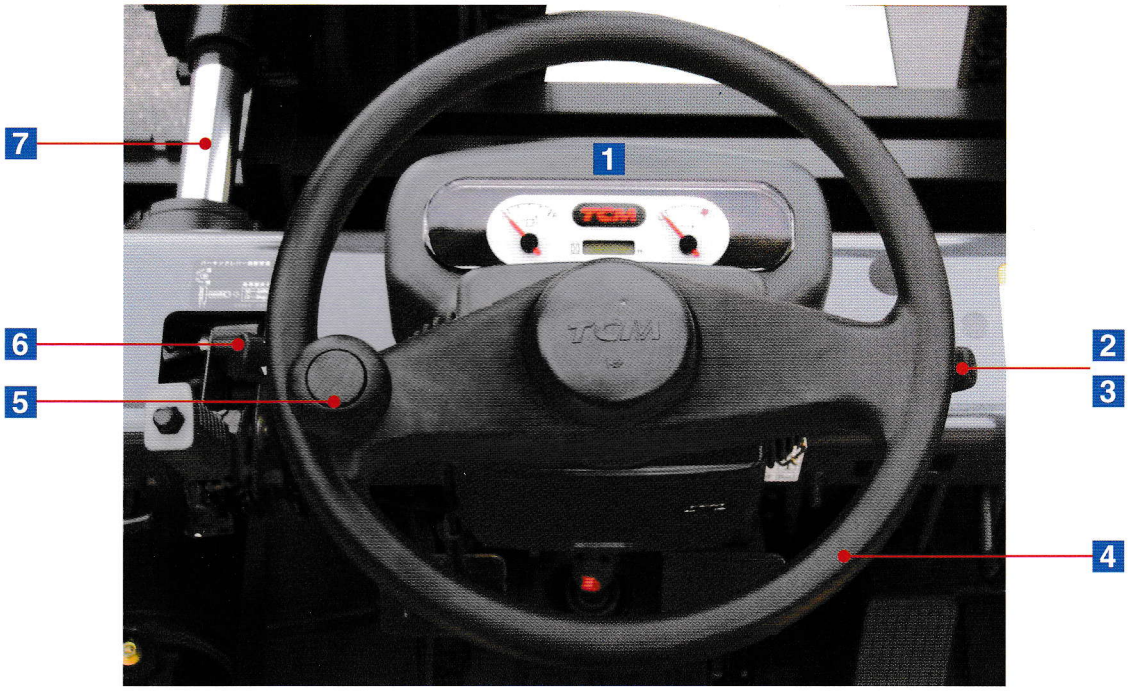

1 New, easy-to-read instrument panel

The new type of instrument panel is easy to read and simple to understand.
The indicators are brightly lit with long-life LEDs.

2 The light switch is combined in the turn signal lever

The light switch has been integrated with the turn signal lever for easier operation.

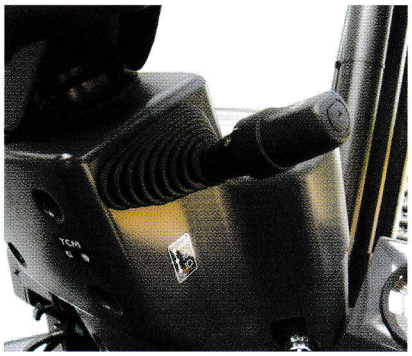

3 Auto-return turn signal lever

The turn signal lever returns automatically to neutral when the steering wheel is returned to the straight-ahead position.

4 Fully-hydraulic power steering

Fully-hydraulic power steering makes it possible to turn the wheels while the truck is at a complete stop.

5 Automatic correction of steering wheel knob deviation

Fully-hydraulic power steering systems unintentionally allow the steering wheel to move gradually away from the center position you want to hold while traveling. On this truck, however, any deviation in the steering wheel center position is automatically corrected, back to the position you want.

6 Electric directional control lever

The electric directional control lever makes it easy to change the direction of travel.

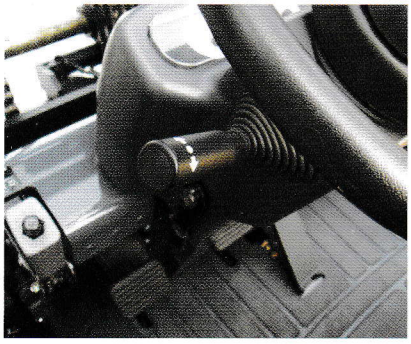

7 Optimized mast tilt speed

The control valve has a bleed-off circuit to reduce the mast tilting speed, for fine tuning the mast stop position when tilting the mast forward or back.

Mast tilt speeds (Previous models → New models)

Forward:	2.8	→ 3.0	seconds
Backward:	1.6	→ 3.0	seconds

(FD100-2)

https://truckmanualshub.com/

SAFETY

Quest for safer operation through ergonomics

Improved safety

Traveling interlock system

The traveling interlock system prevents the truck from moving if the operator gets out of the operator's seat. A buzzer sounds if the operator leaves his seat while the starter switch is on. After about 3 seconds, the transmission will be locked in neutral and the warning light will come on.

* The interlock system only shifts the transmission into neutral; it does not engage the brakes. When leaving the truck, always apply the parking brake.

Neutral start safety mechanism

The neutral start safety mechanism prevents the engine from being started unless the directional control lever is in the neutral position. This prevents the truck from moving abruptly when the starter switch is turned. Also, a neutral indicator has been installed on the instrument panel, to allow the operator to check whether or not the directional control lever is in neutral.

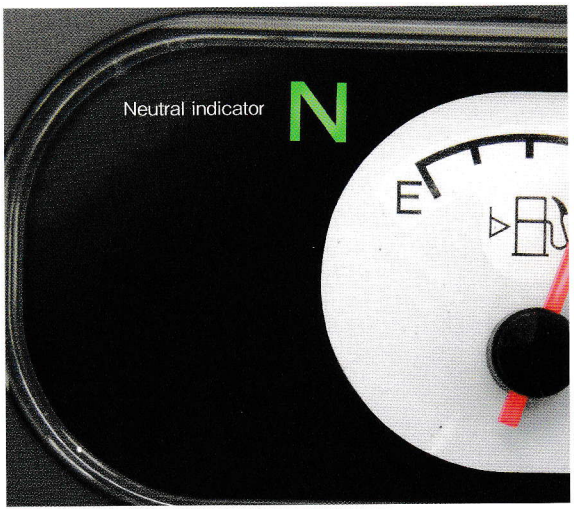

Wider range of forward visibility

Forward visibility has been improved thanks to the use of a super-wide carriage, and the view of the fork tips from the operator's seat has also been improved substantially.

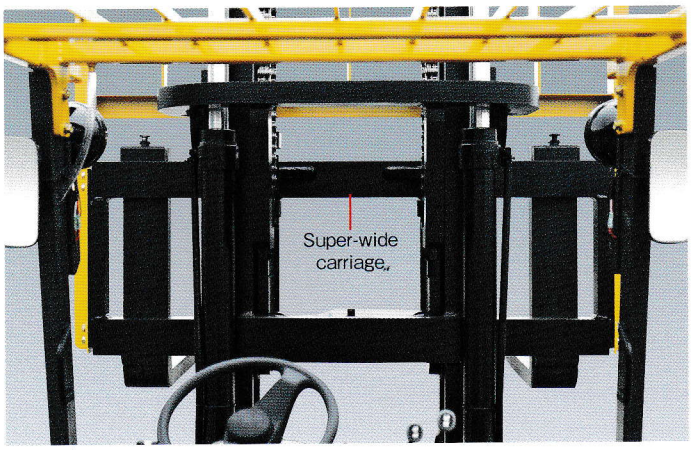

Some of the fastest lift speeds in their class

Engine output has been increased with a turbocharger and an intercooler, as well as the direct fuel injection system, to give these trucks some of the fastest lift speeds in their class.

Overheating prevention

A warning light has been installed to tell the operator that the engine is overheated. If the coolant temperature rises excessively, the engine output is automatically reduced to keep the engine from becoming seriously damaged.
(The warning light comes on when the engine has overheated.)

Safety seat with side supports

The new series is also equipped with a safety seat, a seat belt and side supports.
It adjusts easily to the individual operator's weight, reclines, and has fore-and-aft positioning for more operator comfort. It also has a convenient document pocket on the rear of the seat back.

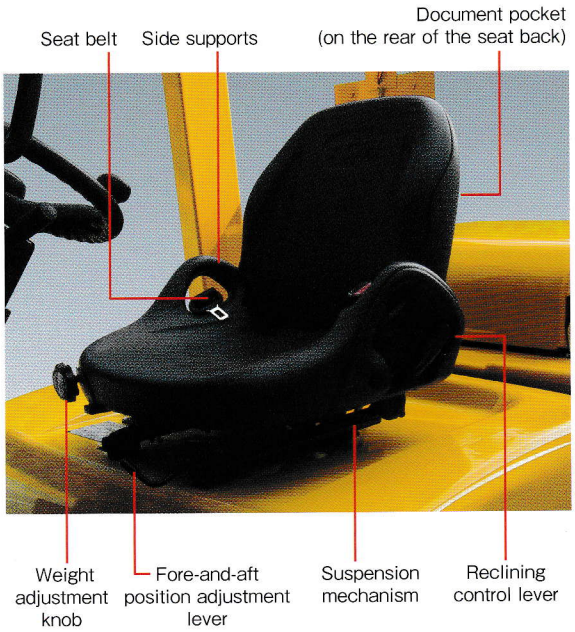

https://truckmanualshub.com/

ECONOMY

Quest for better economy through superb serviceability

Easier to service

Rear axle with a built-in cylinder

The rear axle has a built-in steering cylinder. Its simple design with a smaller number of service points contributes to improved ease of servicing.

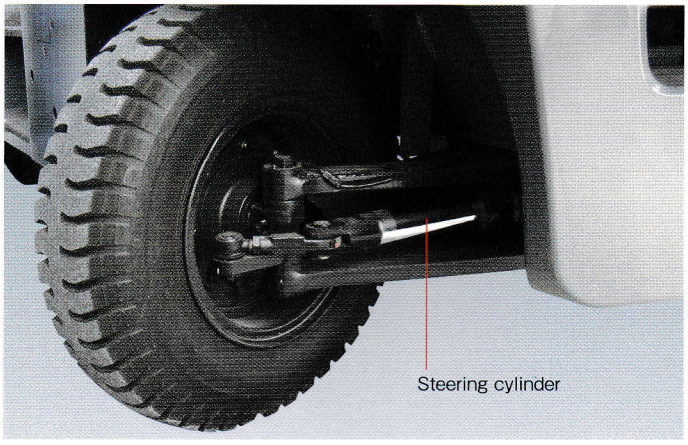

Engine hood has a gas-spring support

The engine hood has a gas-spring support, so that the operator can open and close the hood easily. The support also has a fail-safe stopper, so the hood won't shut unexpectedly.

Boltless floorboards are easy to remove and reinstall

The front and rear floorboards can be removed and reinstalled easily, without any tools.

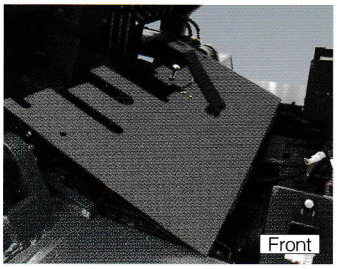

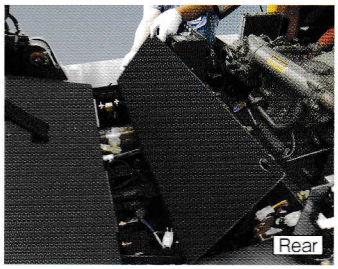

Pen holder and clipboard

A pen holder and a clipboard to secure papers are provided for your convenience.
The clipboard is made of comfortable resin.

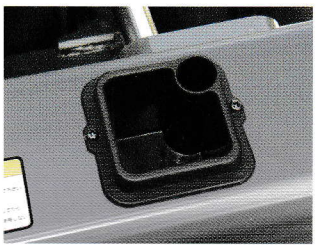

■Standard equipment

- Operator's seat
- Horn
- Steering wheel
- Directional control lever
- Parking brake lever
- Brake pedal (inching pedal)
- Brake pedal
- Accelerator pedal
- Turn signal lever and lighting switch
- Lift lever
- Tilt lever
- Starter switch
- Traveling speed selection switch
- Engine warning light
- Fuel level warning light
- Engine preheating indicator light
- Interlock warning light
- Neutral start indicator light
- Fuel level indicator
- Hour meter
- Cooling water temperature gauge
- Engine oil pressure warning light
- Charge warning light

■Optional equipment (for truck body)

- "J" lug tire
- "Unique" tire ("Super Lug")
- "Unique" tire ("Softone")
- Overhead guard-mounted air cleaner (w. precleaner)
- Double-element air cleaner
- Radiator dust screen
- Overhead guard with front windshield (w/ wiper)
- Steel cabin
- Steel cabin (w. air conditioner)
- Car heater
- Different lever arrangement
- Speedometer
- Torque converter oil pressure gauge
- OK monitors
- Rear work light
- Yellow beacon light (140 mm in diameter)
- Yellow beacon light (170 mm in diameter)
- Back-up buzzer (high volume level type)
- Mast-mounted lamps (w. lamp guard)
- Mast tilt gauge
- Fire extinguisher
- Certified inspection specification (incl. speedometer)
- Upright muffler
- Tilt cylinder boot
- Three-valve manifold
- Four-valve manifold
- Three-valve manifold for VM mast piping
- Four-valve manifold for VM mast piping

■Optional equipment for load handling

- Long fork
- Load grab
- Fork extension sleeve
- Fork positioner
- Manual fork positioner
- Hinged fork
- Scoop for hinged fork
- Ram
- Rotating fork
- Side shifter
- Wide carriage
- Full-free mast
- Full-free three-stage mast
- High-Lo mast

https://truckmanualshub.com/

- TCM retains the right to change these products and specifications without incurring any obligation relating to such changes.
- These products and specifications are subject to change without notice.
- Photos and illustrations may or may not include optional equipment and accessories.
- Features and specifications may vary depending on markets.
- Performance data and dimensions are nominal and subject to tolerances.

ISO 9001 Certification
(TCM Shiga Plant)

ISO 14001 Certification
(TCM Shiga Plant)

Manufactured by

TCM

TCM CORPORATION

1-15-10, Kyoumachi-bori Nishi-ku,
Osaka, 550-0003, Japan
TEL:+81-6-7669-8906
FAX:+81-6-7669-8916
www.tcmglobal.net

Distributed by

CATALOGUE No. FS08-30R/E(General)
Printed in Japan SI-1108030-00

https://truckmanualshub.com/

TCM

DIESEL POWERED

Pneumatic Tire Truck

6-10t/13000-22000 lbs.

FD60Z8	6000 kg / 600 mm 13000 lbs/ 24 in	**FD80Z8**	8000 kg / 600 mm 17500 lbs/ 24 in
FD70Z8	7000 kg / 600 mm 15500 lbs/ 24 in	**FD100Z8**	10000 kg / 600 mm 22000 lbs/ 24 in

POWERFUL

BIGGEST AND MOST POWERFUL ENGINE IN THIS CLASS

High-power & Low-fuel consumption
6.5 liter diesel engine, 6BG1 provides;

Rated power
84.6 kW (115PS)/2100 r.p.m.··· FD80 · 100
82.4 kW (112PS)/2000 r.p.m.··· FD60 · 70

Rated torque
416.5N · m (42.5 kg · m)/1500 r.p.m.

FASTEST ACCELERATION

10 meter accelerating speed (loaded)

NEW	4.3 sec
PREVIOUS	5.1 sec

SPEEDY

SPEEDY LIFTING

510 mm/s (loaded, FD60)

ELECTRONIC CONTROLLED AUTOMATIC TRANSMISSION

Automatic transmission provides reliable travel control incorporated with a low effort single electronic control lever.

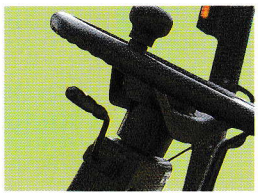

FRIENDLY

ENVIRONMENT FRIENDLY
BLACK SMOKE SAVINGS OF 30%
NOXIOUS SUBSTANCE SAVINGS OF 50%

LOW NOISE

85 dB(A) (at operators ear, according to ISO)

GREATER VISIBILITY

Excellent forward and upward visibility (top in class) 20% wider than previous model.

https://truckmanualshub.com/

STANDARD SPECIFICATIONS

Characteristics	1	Manufacturer				TCM	
	2	Model				FD60Z8	FD70Z8
	3	Loading Capacity			kg (lbs)	6000 (13000)	7000 (15500)
	4	Load Center			mm (in.)	600 (24)	
	5	Power Type				Diesel	
	6	Operator Type				Sit Down Rider Type	
	7	Tire Type		Front / Rear		Pneumatic	
	8	Wheels (X = driven)		Front / Rear		4×/2	
Dimensions	9	Standard Lifting Height			mm (in)	3000 (118)	
	10	Free Lift			mm (in)	205 (8.1)	215 (8.5)
	13	Fork Size		L×W×T	mm (in)	1220×150×60 (48.0×5.9×2.4)	1220×150×70 (48.0×5.9×2.8)
	14	Tilt Range		Fwd / Bwd	deg	6 / 12	
	15	Length to Fork Face			mm (in)	3535 (139.2)	3600 (141.7)
	16	Overall Width			mm (in)	1995 (78.5)	
	17	Mast Height Fork Lowered			mm (in)	2500 (98.4)	
	18	Overall Height, Fork Raised			mm (in)	4420 (174.0)	
	19	Overhead Guard Height***			mm (in)	2450 (96.5)	
	21	Turning Radius (Outside)			mm (in)	3300 (130.0)	3360 (132.3)
	22	Fork Overhang (Centerline of Front Axle to Front Fork Face)			mm (in)	615 (24.2)	625 (24.6)
	23	Basic Right Angle Stacking Aisle Width			mm (in)	5550 (218.5)	5620 (221.3)
Performance	24	Speeds	Travel Max.	With Load	km / h (mph)	26 (16.1)	
				Without Load	km / h (mph)	30 (18.6)	
	25		Lifting	With Load	mm / s (fpm)	510 (100.4)	460 (90.6)
				Without Load	mm / s (fpm)	550 (108.3)	
	26		Lowering	With Load	mm / s (fpm)	450 (88.6)	
				Without Load	mm / s (fpm)	500 (98.4)	
	28	Max. Drawbar Pull		With / without load	kN (lbs)	53.9 (12100) / 22.1 (4960)	52.9 (11900) / 21.6 (4850)
	29	Gradeability at (1.6 km/h or 1 mph)		With Load	% (tan θ)	33	29
	30	Max. Gradeability**		With / without load	% (tan θ)	38 / 19	33 / 19
Weight	32	Total Weight			kg (lbs)	8630 (19030)	9360 (20640)
	33	Weight Distribution	With Load	Front	kg (lbs)	13040 (28750)	14530 (32040)
				Rear	kg (lbs)	1590 (3510)	1830 (4040)
	34		Without Load	Front	kg (lbs)	3810 (8400)	3750 (8270)
				Rear	kg (lbs)	4820 (10630)	5610 (12370)
Brakes and Tires	35	Tire	Number	Front / Rear		4 / 2	
	36		Size	Front		8.25×15—14PR	
	37			Rear		8.25×15—14PR	
	38	Wheelbase			mm (in)	2250 (88.6)	
	39	Tread		Front	mm (in)	1470 (57.9)	
				Rear	mm (in)	1700 (66.9)	
	40	Underclearance	at lowest point		mm (in)	190 (7.5)	
	41		at Frame		mm (in)	225 (8.9)	
	42	Brake	Service			Hydraulic-Foot pedal	
	43		Parking			Mechanical—Hand lever	
Engine and Transmission	45	Battery	Voltage / Capacity			2×12V—70AH / 20h	
	49	Internal Combustion Engine	Make-Model			Isuzu 6BG1	
	50		Rated Horsepower / r.p.m.			82.4kW/2000r.p.m. : 112PS/2000r.p.m. (SAE GROSS 114HP/2000r.p.m.)	
	51		Rate Torque / r.p.m.			416.5N·m / 1500r.p.m. : 42.5kg·m /1500r.p.m. (SAE 307.4ft·lbs / 1500r.p.m.)	
	52		Number of Cylinder			6	
			Displacement		lit (cu-in)	6.494 (396.3)	
			Fuel Tank Capacity		lit (US gal)	140 (37.0)	
	55	Transmission	Number of Speed Fwd / Rvs—Type			2 / 2—Automatic Power shift	
	57	Operating Pressure	For Attachment		kg / cm² (psi)	200 (2844)	

**Computed values (Travel speed 0 km/h) ***In European Export Units +15 mm (0.5 in)

https://truckmanualshub.com/

TCM	
FD80Z8	**FD100Z8**
8000 (17500)	10000 (22000)
600 (24)	
Diesel	
Sit Down Rider Type	
Pneumatic	
4×/2	
3000 (118)	
205 (8.1)	
0×170×75 (48.0×6.7×3.0)	1220×180×75 (48.0×7.1×3.0)
6 / 12	
3940 (155.1)	4255 (167.5)
2165 (85.2)	2245 (88.4)
2700 (106.3)	2850 (112.2)
4420 (174.0)	4330 (170.5)
2560 (100.8)	
3650 (143.7)	3900 (153.5)
720 (28.3)	710 (28.0)
6015 (236.8)	6250 (246.1)
25 (15.5)	24 (14.9)
30 (18.6)	
450 (88.6)	390 (76.8)
470 (92.5)	410 (80.7)
450 (88.6)	470 (92.5)
450 (88.6)	340 (66.9)
7.3 (12900) / 27.4 (6150)	57.3 (12900) / 31.4 (7050)
27	22
29 / 19	24 / 20
10960 (24170)	12300 (27120)
17030 (37550)	20100 (44320)
1930 (4260)	2200 (4850)
4810 (10610)	5420 (11950)
6150 (13560)	6880 (15170)
4 / 2	
9.00×20—12PR	9.00×20—14PR
9.00×20—12PR	9.00×20—14PR
2500 (98.4)	2800 (110.2)
1600 (63.0)	
1700 (66.9)	
245 (9.6)	
320 (12.6)	
Hydraulic—Foot pedal	
Mechanical—Hand lever	
2×12V—70AH / 20h	
Isuzu 6BG1	
84.6kW/2100r.p.m. : 115PS/2100r.p.m. (SEA GROSS 118HP/2100r.p.m.)	
416.5N·m / 1500r.p.m. : 42.5kg·m / 1500r.p.m. (SAE 307.4ft·lbs / 1500r.p.m.)	
6	
6.494 (396.3)	
140 (37.0)	
2 / 2—Automatic Powershift	
200 (2844)	

LOAD CHART

FD60Z8 • FD70Z8

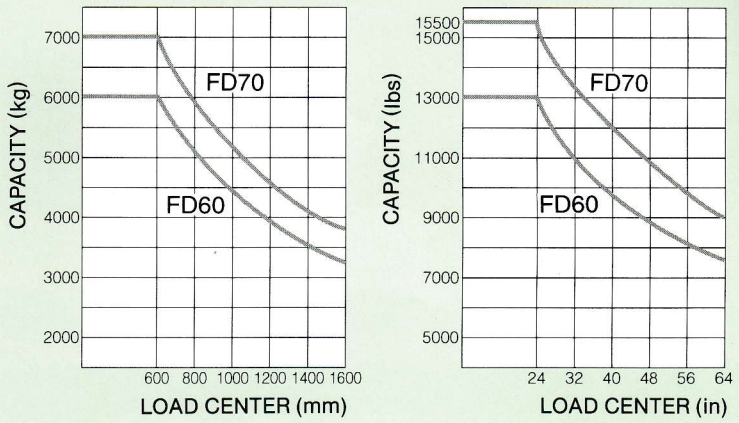

FD80Z8 • FD100Z8

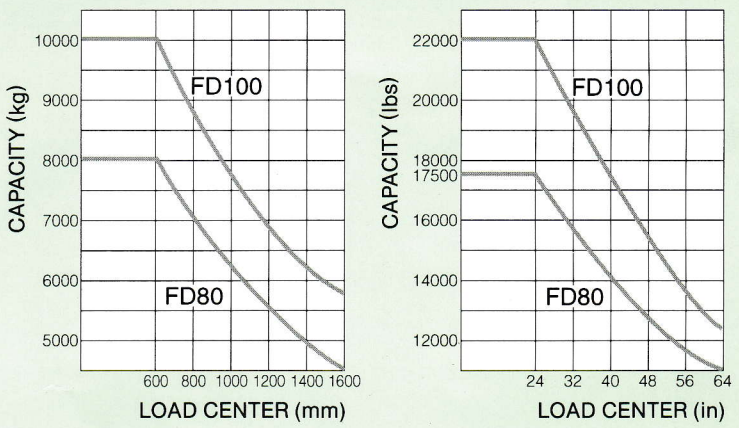

STANDARD EQUIPMENTS

●Wide View Mast ●Cyclopak air cleaner with dust indicator ●Load check valve
●Glow plug indicator ●Drawbar-pin ●Starter switch ●Load backrest ●Long life tires
●Overhead Guard ●Power brake ●Power steering ●Automatic shifting T/M
●Column shift direction change ●Radiator reserve tank ●Retaining Rollers
●Full wide carriage ●Convertor oil cooler ●Head & turn signal lights ●Charging light
●Hour meter ●Engine oil pressure warning light ●Water temperature gauge
●Fuel gauge ●Back-up light ●Horn ●Key switch engine stop ●Neutral safety switch
●Documents clip ●Rear view mirrors ●Tool set ●Back-up buzzer ●Suspension seat
●Tilt adjustable handle

OPTIONAL EQUIPMENTS & ACCESSORIES

●Central greasing ●Cold weather spec. ●Catalystic muffler ●Fire extinguisher
●Steel Cabin ●Heater ●Port relief valves ●Rear working light
●Right hand direction change ●Solid tires ●Spark arrest muffler ●Overhead exhaust
●Water separater ●Tilt cylinder boots ●Strober light ●Steel net on head guard
●Speedometer ●Plate fin radiator ●And others on request.

ATTACHMENTS

●Side shift ●Fork positioner ●Hinged Forks ●Ram ●Fork extension sleeves
●Long forks ●Load grab ●etc.

NOTES

●Overhead guard meets ANSI B56.1 and ISO-6055
●Meets following major standards
JIS D6001 Industrial Lift Trucks
ISO-1074 Counter Balanced Lift Trucks, Stability & Safety Test
ANSI B56.1 Low & High Lift Truck, required by OSHA sec. 1910.178(a)
FEM Safety Code of Lift Trucks
DIN Safety Code of Lift Trucks

https://truckmanualshub.com/

STANDARD DIMENSIONS

FD60Z8 • 70Z8 • 80Z8 • 100Z8

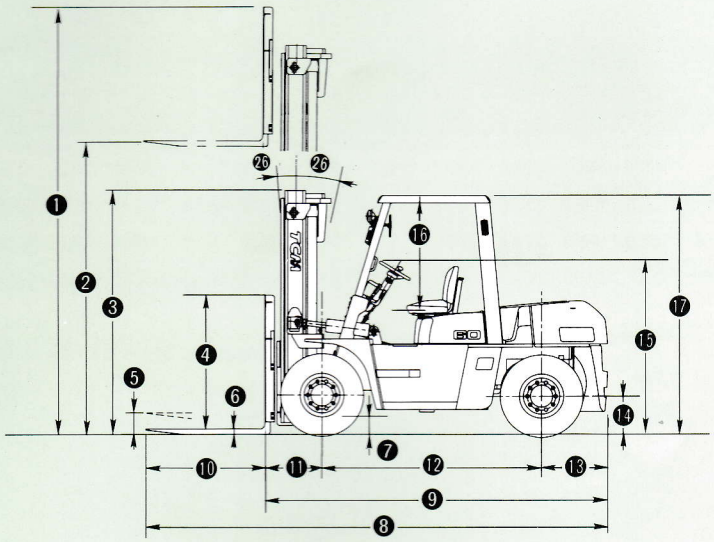

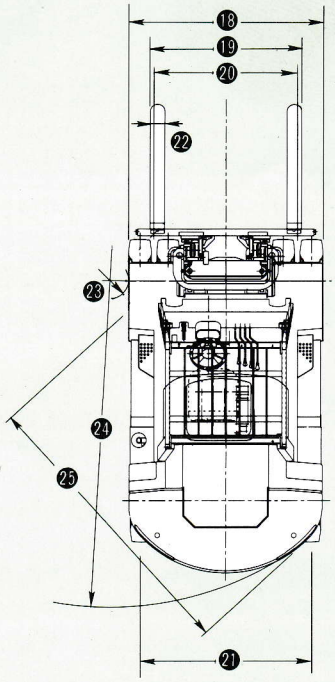

UNDER CLEARANCE

Upright : ●195mm (7.7 in) ○△245mm (9.7 in)
Frame center : ●225mm (8.9 in) ○△320mm (12.6 in)
Drive/Steel Axle : ●190mm (7.5 in)/245mm (9.7 in) ○△265mm (10.4 in)/325mm (12.8 in)
Counter weight : ●225mm (8.9 in) ○△310mm (12.2 in)

NOTES

Counter weight height : ●1370mm (53.9 in) ○1485mm (58.5 in) △1485mm (58.5 in)
Load backrest width : ●1995mm (78.5 in) ○2165mm (85.2 in) △not available
Carriage : ●Width 1845mm (72.6 in), ITA mounting Type IV ○Width 2015mm (79.3 in), ITA mounting Type IV △Width 2140mm (84.3 in), Shaft Type.

●FD60/70 ○FD80 △FD100

Models	FD60Z8		FD70Z8		FD80Z8		FD100Z8	
	mm	in	mm	in	mm	in	mm	in
❶ Overall height, Fork Raised (with backrest)	4420	174.0	4420	174.0	4420	174.0	4330	170.5
❷ Standard lifting height	3000	118.0	3000	118.0	3000	118.0	3000	118.0
❸ Mast height, Fork lowered (upright)	2500	98.4	2500	98.4	2700	106.3	2850	112.2
❹ Load backrest height	1370	53.9	1360	53.5	1355	53.3	1015	40.0
❺ Free lift	205	8.1	215	8.5	205	8.1	205	8.1
❻ Fork thickness	60	2.4	70	2.8	75	3.0	75	3.0
❼ Min. underclearance	190	7.5	190	7.5	245	9.6	245	9.6
❽ Overall length (with forks)	4760	187.4	4835	190.4	5180	203.9	5470	215.4
❾ Overall length (without forks)	3535	139.2	3600	141.7	3940	155.1	4255	167.5
❿ Fork length	1220	48.0	1220	48.0	1220	48.0	1220	48.0
⓫ Fork overhang	615	24.2	625	24.6	720	28.3	710	28.0
⓬ Wheelbase	2250	88.6	2250	88.6	2500	98.4	2800	110.2
⓭ Rear overhang	675	26.6	740	29.1	740	29.1	740	29.1
⓮ Coupler height	430	16.9	430	16.9	515	20.3	515	20.3
⓯ Machine height (without overhead guard and mast)	1780	70.1	1780	70.1	1885	74.2	1885	74.2
⓰ Overhead guard clearance (from face of seat)★★	1100	43.3	1100	43.3	1100	43.3	1100	43.3
⓱ Overhead guard height★★★	2450	96.5	2450	96.5	2560	100.8	2560	100.8
⓲ Overall width	1995	78.5	1995	78.5	2165	85.2	2245	88.4
⓳ Lateral fork adjustment (outside of forks)	300~1835	11.8~72.2	300~1835	11.8~72.2	340~2000	13.4~78.7	405~2145	15.9~84.4
⓴ Tread (front)	1470	57.9	1470	57.9	1600	63.0	1600	63.0
㉑ Tread (rear)	1700	66.9	1700	66.9	1700	66.9	1700	66.9
㉒ Fork width	150	5.9	150	5.9	170	6.7	180	7.1
㉓ Inside turning radius	200	7.9	200	7.9	200	7.9	200	7.9
㉔ Outside turning radius	3300	130.0	3360	132.3	3650	143.7	3900	153.5
㉕ Min. intersecting aisle	2980	117.3	3020	118.9	3290	129.5	3540	139.4
㉖ Tilt range (forward-backward)	6°—12°		6°—12°		6°—12°		6°—12°	

★★In European Export Unit +50mm (2.0 in)
★★★In European Export Unit +15mm (0.5 in)

https://truckmanualshub.com/

FD60Z8, FD70Z8 Wide View Mast VM

Upright Model	Capacity at Load Center 600mm (24 in)				Max. Fork height		Overall Mast Height				Free Lift with Backrest				Tilting Angle Fwd—Bkd	Service Weight with Backrest			
	FD60Z8		FD70Z8				Lowered		Raised with Backrest		FD60Z8		FD70Z8			FD60Z8		FD70Z8	
	kg	lbs	kg	lbs	mm	in	mm	in	mm	in	mm	in	mm	in	Degree	kg	lbs	kg	lbs
VM300	6000	13000	7000	15500	3000	118.0	2500	98.4	4420	174.0	205	8.1	210	8.3	6—12	8630	19030	9360	20640
VM330	6000	13000	7000	15500	3300	130.0	2650	104.4	4720	185.8	205	8.1	210	8.3	6—12	8680	19140	9410	20750
VM350	6000	13000	7000	15500	3500	137.8	2750	108.3	4920	193.7	205	8.1	210	8.3	6—12	8710	19210	9440	20820
VM400	6000	13000	7000	15500	4000	157.5	3050	120.1	5420	213.4	205	8.1	210	8.3	6—12	8900	19620	9630	21230
VM450	6000	13000	7000	15500	4500	177.2	3300	130.0	5920	233.1	205	8.1	210	8.3	6—12	8990	19820	9720	21430
VM500	6000	13000	7000	15500	5000	196.9	3550	139.8	6420	252.8	205	8.1	210	8.3	6—6	9100	20070	9830	21680
VM550	5700	12500	6600	14500	5500	216.5	3850	151.6	6920	272.4	205	8.1	210	8.3	3—6	9300	20510	10030	22120
VM600	5400	11900	6400	14100	6000	236.2	4100	161.4	7420	292.1	205	8.1	210	8.3	3—6	9380	20680	10110	22290

FD60Z8, FD70Z8 Wide View Full Free 2-Stage Mast VFM

Upright Model	Capacity at Load Center 600mm (24 in)				Max. Fork height		Overall Mast Height				Free Lift with Backrest				Tilting Angle Fwd—Bkd	Service Weight with Backrest			
	FD60Z8		FD70Z8				Lowered		Raised with Backrest		FD60Z8		FD70Z8			FD60Z8		FD70Z8	
	kg	lbs	kg	lbs	mm	in	mm	in	mm	in	mm	in	mm	in	Degree	kg	lbs	kg	lbs
VFM300	6000	13000	7000	15500	3000	118.0	2625	103.4	4420	174.0	1255	49.4	1265	49.8	6—12	8755	19310	9465	20880
VFM330	6000	13000	7000	15500	3300	130.0	2775	109.3	4720	185.8	1405	55.3	1415	55.7	6—12	8805	19420	9515	20990
VFM350	6000	13000	7000	15500	3500	137.8	2875	113.2	4920	193.7	1505	59.3	1515	59.6	6—12	8835	19490	9545	21050
VFM400	6000	13000	7000	15500	4000	157.5	3175	125.0	5420	213.4	1805	71.1	1815	71.5	6—12	9035	19930	9745	21490
VFM450	6000	13000	7000	15500	4500	177.2	3425	134.9	5920	233.1	2055	80.9	2065	81.3	6—12	9115	20100	9825	21670

NOTE: VFM MAST
Lifting speed : 350mm/s (69fpm) with load, 380mm/s (75fpm) without load
Lowering speed : 320mm/s (63fpm) with load, 250mm/s (49fpm) without load

Service weight : Without backrest FD60 −54kg (−120 lbs), FD70 −59kg (−130 lbs)
Without Backrest : Free lift +325mm (+12.8 in).
: Overall Mast Height (Raised) −325mm (−12.8 in).

FD60Z8, FD70Z8 Wide View Full Free 3-Stage Mast VFHM

Upright Model	Capacity at Load Center 600mm (24 in)				Max. Fork height		Overall Mast Height				Free Lift with Backrest				Tilting Angle Fwd—Bkd	Service Weight with Backrest			
	FD60Z8		FD70Z8				Lowered		Raised with Backrest		FD60Z8		FD70Z8			FD60Z8		FD70Z8	
	kg	lbs	kg	lbs	mm	in	mm	in	mm	in	mm	in	mm	in	Degree	kg	lbs	kg	lbs
VFHM400	5500	12150	6200	13650	4000	157.5	2500	98.4	5400	212.6	1130	44.5	1140	44.9	6—10	9255	20410	9965	21980
VFHM435	5500	12150	6200	13650	4350	171.3	2625	103.3	5750	226.4	1255	49.4	1265	49.8	6—10	9335	20590	10045	22160
VFHM480	5500	12150	6200	13650	4800	189.0	2775	109.3	6200	244.1	1405	55.3	1415	55.7	6—10	9415	20770	10125	22330
VFHM500	5500	12150	6200	13650	5000	196.9	2875	113.2	6400	252.0	1505	59.3	1515	59.6	6—10	9470	20890	10180	22450
VFHM600	5000	11050	5500	12150	6000	236.2	3300	130.0	7400	291.3	1930	76.0	1940	76.4	3—6	9830	21680	10540	23250
VFHM700	3500	7700	3700	8150	7000	275.6	3675	144.7	8400	330.7	2305	90.7	2315	91.1	3—6	10015	22090	10725	23650
VFHM800	2200	4850	2300	5050	8000	315.0	4100	161.4	9400	370.1	2730	107.5	2740	107.9	3—6	10340	22810	11050	24370

NOTE: VFHM MAST
Lifting speed : 350mm/s (69fpm) with load, 380mm/s (75fpm) without load
Lowering speed : 320mm/s (63fpm) with load, 250mm/s (49fpm) without load

Service weight : Without backrest FD60 −54kg (−120 lbs), FD70 −59kg (−130 lbs)
Without Backrest : Free lift +325mm (+12.8 in).
: Overall Mast Height (Raised) −325mm (−12.8 in).