https://truckmanualshub.com/

# VP 4600

## EQUAL-WHEELED TRACTORS
## ISM - VRM - ARM

ENGLISH

6615801A1 - 09/2016

VALPADANA

https://truckmanualshub.com/

# NEW 4600 SERIES

The 4600 Series is a range of low-power equal-wheeled tractors designed to offer unique features and superior performance in an ultra-compact package.

Supplied in a variety of configurations – ISM and ARM with equal-size wheels, VRM with oversized rear wheels, ISM and VRM with front wheel steering or ARM with articulated steering – the 4600 Series tractors are specially designed for intensive crops such as orchards and vineyards, for greenhouses and nurseries, as well as for the maintenance of green areas.

These super compact tractors cover a power range from 22.7 to 47.3 hp. They feature quiet, environmentally friendly engines, a powerful wet multi-disc braking system, a synchromesh transmission with 8 forward and 4 reverse speeds and a fully independent PTO with wet multi-disc clutch.

https://truckmanualshub.com/

## ISM: One-way, Equal-wheel

The equal-wheel version allows both the front and rear fenders to be mounted in low position, making this tractor ideal for use in greenhouses, large-canopy orchards and Y-trellis systems. The tractor design provides a clear unobstructed view of rear implements, allowing the operator to safely manoeuver in confined spaces.

## VRM: One-way, Variant

Equipped with oversized rear wheels, the VRM model offers greater traction capability for maximum productivity in any situation. Featuring upward turned-final drives on the rear axle, the VRM version maintains a low centre of gravity and offers a super tight turning radius. Specially designed for medium-scale orchards and vineyards, this tractor model can be equipped with implement draft and position control, making it ideal to operate ploughs, spring cultivators and grubbers.

## ARM: One-way, Articulated

Featuring an articulated steering system and equal-sized tyres, this version is ideally suited for use in intensive crops, such as orchards and vineyards, in greenhouses and nurseries, as well as for the maintenance of green areas.

https://truckmanualshub.com/

# UNMATCHED VERSATILITY

**ENGINE**

The 4600 series offers three Yanmar liquid-cooled, 3- and 4- cylinder engine options, one with indirect injection delivering 27 hp and the other two with direct injection and power outputs of 35.5 and 47.5 hp, respectively.

★ ***All engines meet the Tier 3 emission standards and are equipped with a 35-liter fuel tank ensuring over eight hours of operation without refuelling.***

https://truckmanualshub.com/

## Safety and comfort

Combining a sturdy chassis with a high lift capacity, the 4600 tractors can handle large implements with ease. On the ISM and VRM versions, the steering system features a steering cylinder integrated into the housing, which dispenses with the conventional front wheel tie rod, while providing impressive steering angles.

The driving position is mounted on a semi-platform and features a tilting steering wheel and side gear levers for maximum riding comfort. The instrument panel with ergonomically-arranged controls ensures safe and simple tractor operation.

**TRANSMISSION**

The 4600 is the only low-power equal-wheel tractor featuring a synchronized gearbox with 8FWD+4REV and a maximum speed of 30 km/h. The transmission control levers are fitted to the steering column for ease of operation.

★ *Specially-designed synchronizers allow for smooth and fast gear changes, even while in motion, without damage to the transmission. This makes the tractor very easy to use while delivering high performance during transport operations and combined road and field haulage.*

**DRIVE AND BRAKES**

When maximum traction is not required, the four-wheel drive can be disengaged to minimize soil damage.

★ *The 4600 is the only low-power equal-wheel tractor featuring internal wet multi-disc brakes for reliable braking performance in any conditions. This braking system, which is virtually maintenance and adjustment free, greatly enhances the active safety of the vehicle, making it ideal for sloping grounds and transport operations, as well as for circumstances where sharp braking is required to assist steering manoeuvres.*

https://truckmanualshub.com/

## Steering system

The exclusive Central Drive steering system with cylinder integrated into the front axle dispenses with the conventional front wheel tie rod. This innovative solution makes the steering system simpler in design and more efficient and allows for different steering angles on each wheel, which enables the ISM and VRM models to make super tight turns.

The ARM version features an articulated steering system allowing a steering angle of up to 40°.

## REAR HITCH AND PTO

The rear hitch comes standard with raise/lower and float control functions. A lowering speed control and a draft control are available as options. The three-point hitch is Category 1 and provides a maximum lift capacity of 1500 kg.

★ *The 4600 is the only low-power equal-wheel tractor that features a fully independent power take-off. The PTO is engaged by a mechanically-operated wet multi-disc clutch that causes the PTO shaft to rotate independently of the tractor motion.*

https://truckmanualshub.com/

## Driving position

The 4600 Series offers a clean, uncluttered driving position which provides plenty of room and allows easy access for the driver. The driving position features a sprung seat and a tilt-adjustable steering wheel that allow any driver to find the most comfortable position. The transmission control levers are fitted to the steering column and all controls are ergonomically arranged allowing for intuitive control and simple operation. Functional and easy to read, the instrument panel keeps the operator constantly informed on the tractor's performance. The instrument panel is designed to tilt with the steering wheel so it is always clearly visible.

## KEY FEATURES AND BENEFITS

- ★ *Safe and comfortable driving position*
- ★ *Maximum speed of 30 km/h*
- ★ *Independent PTO for precise implement control*
- ★ *Maximum productivity*
- ★ *Quick manoeuvring in tight spaces with the Central Drive steering system*
- ★ *Articulated steering on the ARM version for super tight turns*
- ★ *Less stress for the operator*

**CHASSIS**

With an oscillation angle of ± 15° between front and rear axle, the chassis of the 4600 Series provides maximum traction on all terrains, while keeping a low centre of gravity.

★ ***This design enhances the stability of the tractor/implement system and increases safety on slopes.***

**REMOTE HYDRAULIC VALVES**

The 4600 tractor can be fitted with up to two rear double-acting remote valves (1 standard and 1 optional) with ergonomically-positioned control levers. The quick-release couplings, mounted on the rear of tractor, are easily accessible for convenient and fast operation.

★ ***The hydraulic system is equipped with a pump that provides a flow rate of 34.6 l/min to operate both remote valves, as well as the rear hitch and steering system.***

https://truckmanualshub.com/

| | | 4630 ISM - ARM | 4645 ISM - ARM | 4655 ISM - ARM | 4645 VRM | 4655 VRM |
|---|---|---|---|---|---|---|
| **ENGINE** | | **(TIER 3)** | **(TIER 3)** | **(TIER 3)** | **(TIER 3)** | **(TIER 3)** |
| MAKE | | YANMAR | YANMAR | YANMAR | YANMAR | YANMAR |
| INJECTION | | INDIRECT | DIRECT | DIRECT | DIRECT | DIRECT |
| MODEL | | 3TNV76-XVA | 3TNV88-BKVA | 4TNV88-BKVA | 3TNV88-BKVA | 4TNV88-BKVA |
| MAX. POWER ISO | HP/KW | 22.7 / 16.7 | 35.4 / 26 | 47.3 / 34.8 | 35.4 / 26 | 47.3 / 34.8 |
| ENGINE SPEED | RPM | 2800 | 2800 | 2800 | 2800 | 2800 |
| MAXIMUM TORQUE | NM | 66 | 105.4 | 142.7 | 105.4 | 142.7 |
| MAX. TORQUE SPEED | RPM | 1800 | 1200 | 1100 | 1200 | 1100 |
| DISPLACEMENT | $CM^3$ | 1115 | 1642 | 2189 | 1642 | 2189 |
| CYLINDERS / VALVES | | 3 / 6 | 3 / 6 | 4 / 8 | 3 / 6 | 4 / 8 |
| WATER COOLING | | ● | ● | ● | ● | ● |
| FUEL TANK CAPACITY | L | 35 | 35 | 35 | 35 | 35 |
| **TRANSMISSION** | | | | | | |
| MECHANICAL GEARBOX WITH 8FWD+4REV SPEEDS | | SYNCHRONIZED | SYNCHRONIZED | SYNCHRONIZED | SYNCHRONIZED | SYNCHRONIZED |
| MAX. SPEED | | 30 KM/H | 30 KM/H | 30 KM/H | 30 KM/H | 30 KM/H |
| **POWER TAKE-OFF** | | | | | | |
| ENGINE / GEARBOX CONNECTION | | INDEPENDENT | INDEPENDENT | INDEPENDENT | INDEPENDENT | INDEPENDENT |
| ENGAGEMENT | | MECHANICAL | MECHANICAL | MECHANICAL | MECHANICAL | MECHANICAL |
| 1 SPEED 540 RPM | | ● | ● | ● | ● | ● |
| 1" 3/8 (34.9 MM) PTO SHAFT WITH 6 SPLINES | | ● | ● | ● | ● | ● |
| GROUND SPEED PTO | | ● | ● | ● | ● | ● |
| **FRONT AXLE** | | | | | | |
| FOUR-WHEEL DRIVE | | DISENGAGEABLE | DISENGAGEABLE | PERMANENT | DISENGAGEABLE | PERMANENT |
| MAX. OSCILLATION ANGLE | | ± 15° | ± 15° | ± 15° | ± 15° | ± 15° |
| DIFFERENTIAL LOCK | | MECHANICAL | MECHANICAL | MECHANICAL | MECHANICAL | MECHANICAL |
| **STEERING** | | | | | | |
| HYDRAULIC | | ● | ● | ● | ● | ● |
| MAX. STEERING ANGLE | | 42° - 40° (ARM) | 42° - 40° (ARM) | 42° - 40° (ARM) | 42° | 42° |
| **BRAKES** | | | | | | |
| CONTROL | | MECHANICAL | MECHANICAL | MECHANICAL | MECHANICAL | MECHANICAL |
| REAR WITH WET DISCS | | ● | ● | ● | ● | ● |
| **HYDRAULIC POWER LIFT** | | | | | | |
| RAISE / LOWER / FLOAT CONTROL | | ● | ● | ● | ● | ● |
| DRAFT CONTROL | | — | ○ | ○ | ○ | ○ |
| LIFT CAPACITY | | KG 1000 | KG 1000 | KG 1500 | KG 1000 | KG 1500 |
| PUMP FLOW RATE (HITCH + STEERING) | | L/MIN 19 | L/MIN 29.3 | L/MIN 45.5 | L/MIN 29.3 | L/MIN 45.5 |
| STANDARD THREE-POINT HITCH | | CAT. I | CAT. I | CAT. I | CAT. I | CAT. I |
| REAR REMOTE VALVES STD + OPT | | 1 + 1 | 1 + 1 | 1 + 1 | 1 + 1 | 1 + 1 |
| **DRIVING POSITION** | | | | | | |
| SEMI-PLATFORM | | ● | ● | ● | ● | ● |
| SPRUNG SEAT | | ● | ● | ● | ● | ● |
| STEERING WHEEL | | ADJUSTABLE | ADJUSTABLE | ADJUSTABLE | ADJUSTABLE | ADJUSTABLE |
| FOLDING ROPS | | ● | ● | ● | ● | ● |
| **TOW HOOK** | | | | | | |
| CUNA | | CATEGORY B, HEIGHT ADJUSTABLE | | | | |

**Key:** ● = standard; ○ = option; — = not available

https://truckmanualshub.com/

| | | 4630 ISM - ARM | | 4645 ISM - ARM | | 4655 ISM - ARM | | 4645 VRM | 4655 VRM |
|---|---|---|---|---|---|---|---|---|---|
| **ADDITIONAL EQUIPMENT** | | | | | | | | | |
| WHEEL BALLASTS 2X33 KG | | ○ (FRONT/REAR) | | | | | | ○ (FRONT) | |
| WHEEL BALLASTS 2X55KG | | — | | | | | | ○ (REAR) | |
| **WEIGHTS (IN RUNNING ORDER WITH DRIVER)** | | | | | | | | | |
| WITH FRONT WHEELS | | 7.50 R16 | | 7.50 R16 | | 7.50 R16 | | 7.50 R16 | 7.50 R16 |
| WITH REAR WHEELS | | 7.50 R16 | | 7.50 R16 | | 7.50 R16 | | 300/70 R20 | 300/70 R20 |
| TOTAL | KG | 1230 | 1190 | 1280 | 1240 | 1330 | 1290 | 1320 | 1370 |
| FRONT AXLE | KG | 735 | 715 | 775 | 755 | 825 | 805 | 790 | 840 |
| REAR AXLE | KG | 495 | 475 | 505 | 485 | 505 | 485 | 530 | 530 |
| **DIMENSIONS** | | | | | | | | | |
| A - OVERHANG | MM | 920 | 828 | 920 | 828 | 1012 | 928 | 920 | 1012 |
| B - WHEELBASE | MM | 1280 | 1362 | 1280 | 1362 | 1280 | 1362 | 1240 | 1240 |
| C - TOTAL LENGTH | MM | 2922 | | 2922 | | 3014 | | 2922 | 3014 |
| D - GROUND CLEARANCE | MM | 208 | | 208 | | 208 | | 208 | 208 |
| E - HEIGHT TO STEERING WHEEL | MM | 1137 | 1140 | 1137 | 1140 | 1137 | 1140 | 1137 | 1137 |
| F - HEIGHT TO ROPS | MM | 1954 | 1960 | 1954 | 1960 | 1954 | 1960 | 1954 | 1954 |
| G - HEIGHT TO REAR ROPS | MM | 1250 | 1256 | 1250 | 1256 | 1250 | 1256 | 1250 | 1250 |
| **DIMENSIONS WITH VARIOUS TYRES COMBINATIONS** | | | | | | | | | |
| H - FRONT TRACK WIDTH | MIN./MAX. MM | 970/1286 | | 970/1286 | | 970/1286 | | 970/1286 | 970/1286 |
| I - FRONT WIDTH | MIN./MAX. MM | 1178/1494 | | 1178/1494 | | 1178/1494 | | 1178/1494 | 1178/1494 |
| L - REAR TRACK WIDTH | MIN./MAX. MM | 970/1286 | | 970/1286 | | 970/1286 | | 936/1250 | 936/1250 |
| M - REAR WIDTH | MIN./MAX. MM | 1178/1494 | | 1178/1494 | | 1178/1494 | | 1290/1472 | 1290/1472 |

**Key:** ● = standard; ○ = option; — = not available

| TURNING RADIUS | | VRM | ISM | ARM |
|---|---|---|---|---|
| WITH FRONT WHEELS | | 260/70R16 | 260/70R16 | 260/70R16 |
| WITH REAR WHEELS | | 300/70R20 | 260/70R16 | 260/70R16 |
| INNER RADIUS | M | 1.25 | 1.25 | 1.35 |
| OUTER RADIUS | M | 3.00 | 2.85 | 2.39 |
| TRACK WIDTH | MM | 970 | 970 | 970 |

| ISM - ARM - FRONT/REAR TYRES |
|---|
| 7.50-16 |
| 260/70R16 |
| 29X12.50-15 GARDEN |

| VRM - FRONT/REAR TYRES |
|---|
| 7.50-16 AND 9.50R20 |
| 7.50-16 AND 300/70R20 |
| 260/70-R16 AND 300/70R20 |

**EQUAL-WHEEL**

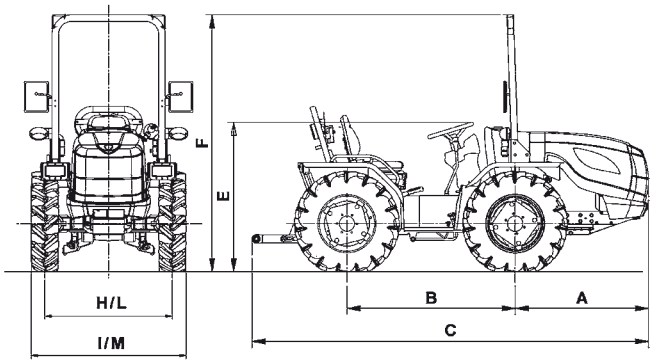


**VARIANT**

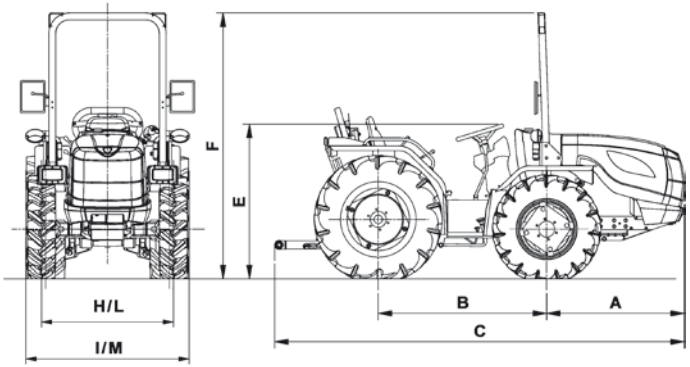


ARGOTRACTORS
via G. Matteotti, 7 | 42042 Fabbrico [RE] Italia
t. +39.0522.656.111 | f. +39.0522.656.476
webmaster@argotractors.com | www.argotractors.com

AgroLube
graphic design: gruppo saldatori | bzzbzz@grupposaldatori.com
All data and illustrations provided in this brochure are for information purposes only and can be changed without notice.