https://truckmanualshub.com/

Operator's Manual
VNL and VNM

VOLVO

https://truckmanualshub.com/

Foreword

This manual contains information concerning the safe operation of your vehicle. It is extremely important that this information is read and understood before the vehicle is operated. This manual also contains a considerable amount of information concerning the vehicle, such as vehicle identification, Preventive Maintenance recommendations and a log for your service records. Please keep this in the vehicle at all times. Information from other component manufacturers is supplied in separate manuals in the Owner's Package.

NOTE! It is important that this manual stay with the vehicle when it is sold. Important safety information must be passed on to the new customer. The service information contained in this manual gives the owner important information about maintaining the vehicle but is not intended as a substitute for the Preventive Maintenance Service Manual and must not be regarded as such.

The National Highway Traffic Safety Administration (NHTSA) and Volvo Trucks North America, Inc. (VTNA) should be informed immediately if you believe that the vehicle has a defect that could cause a crash, injury or death.

Contact NHTSA by calling the Auto Safety Hotline at 1 (800) 424–9393 (or 366–0123 in the Washington, DC area) or by writing to: NHTSA, U.S. Department of Transportation, Washington, DC 20590.

Volvo Trucks North America, Inc.
Greensboro, NC USA

Order number: PV776-TSP20 154796

© 2001 Volvo Trucks North America, Inc., Greensboro, NC USA

All rights reserved. No part of this publication may be reproduced, stored in retrieval system, or transmitted in any forms by any means, electronic, mechanical, photocopying, recording or otherwise, without the prior written permission of Volvo Trucks North America, Inc..

https://truckmanualshub.com/

Contents

General Information 1
- Information For the Owner 1
- General Safety Information 3
- Modifications to Vehicle 7
- Exhaust and Noise Emissions 8
- Vehicle Data 16

Vehicle Access 20
- Cab Doors and Door Lock 20
- Cab Entry and Exit 22
- Luggage Compartment 29
- Hood 30

Pre-Trip Inspection and Daily Maintenance 32
- General 32
- Pre-Trip Inspection Quick List 33
- Daily Maintenance 45

Additional Safety Features 50
- Safety Belts 50
- SRS Airbag 61
- Safety Equipment 68
- VORAD Collision Warning System ... 69

Instruments and Controls 70
- Dash Overview 70
- Instrument Cluster Overview 71
- Telltale Overview 72
- Graphic Display Telltale Overview 73
- Left Instrument Section 74
- Main Instrument Section 82
- Right Instrument Section 89
- Changing Telltale Bulbs In Cluster 95
- Steering Column Switches 97
- Left Switch Cluster 99
- Driving Light Switches 104
- Right Switch Cluster 106
- Pneumatic Switch Cluster 110
- Optional Switch Cluster 112
- Miscellaneous Switches 113

Graphic Display 114
- Graphic Display Overview 114
- Graphic Display Controls 115
- Graphic Display Telltales 117
- Information and Stop Messages 118
- Information Telltale 119
- Stop Telltale 126
- Acknowledge Information and Stop Messages 130
- Main Menu: Set-Up Mode 132
- Main Menu: System Diagnostic 137
- Main Menu: Data Log Mode (Volvo Engine Only) 152
- Main Menu: Password Input 158
- Main Menu: Gauge 159
- Main Menu: Fuel Economy (option) 163
- Main Menu: Time/Distance 165
- Main Menu: FAULTS? 170

Heating and Air Conditioning 174
- General 174
- Climate Unit Main Control Panel 175
- Sleeper Climate Unit 183
- Cab Ventilation 185
- Cab Air Filters 187
- Parking Heater (optional) 188
- A/C Diagnostic Module 194

Seats 195
- General 195
- National Standard Seat Adjustments 196
- National Comfort Seat Adjustments . 197
- Volvo Standard Seat Adjustments 198
- Volvo Comfort Seat Adjustments 199
- National Stationary Seat 202

https://truckmanualshub.com/

Cab Interior and Sleeper 203
Interior/Reading Lights 203
Storage Compartments 206
Sleeper Bunks 212
VN-660 and VN–770 Sleeper Table 217
Sleeper Compartment Sink 220
Miscellaneous Sleeper Equipment 224

Communication and Entertainment 231
Antennas 231
Stereo/Radio 233
Communication Equipment 234
Television 235

Fuel Economy Driving 237
Fuel Economy 237

Engine Start and Operation 244
Starting the Engine 244
Cold Weather Start and Operation ... 249
Engine Operation 256
Cruise Control 265
Fuel Tank Cap(s) 267

Clutch and Transmission 269
Clutch 269
Folding Gear Lever (option) 270

Brakes 272
Brakes 272

Electrical System 292
Electrical System 292

Power Steering 309
General 309

Axles and Wheels 311
Axles 311
Wheels 313

Fifth Wheel Instructions 316
Fifth Wheel General Information 316
Fifth Wheel 319
Fifth Wheel Slider (option) 320
Unlocking the Fifth Wheel 321
Trailer Coupling Procedures 323
Trailer Uncoupling Procedures 328
Operating the Volvo Slider 333

Emergency Information 335
Towing Procedure 335

Service Information 341
Service Assistance and Manuals 341

Index 343

https://truckmanualshub.com/

Warning Label Information

IMPORTANT

Before driving this vehicle, be certain that you have read and that you fully understand each and every step of the driving and handling information in this Operator's Manual. Be certain that you fully understand and follow all safety warnings. It is extremely important that this information is read and understood before the vehicle is operated.

IT IS IMPORTANT THAT THE FOLLOWING INFORMATION CONCERNING LABELS BE READ, UNDERSTOOD AND ALWAYS FOLLOWED.

The following types of labels are used throughout this manual:

NOTE! A note defines an operating procedure, practice, condition, etc., which is essential to proper operation of the vehicle.

CAUTION

A caution label directs the operator's attention to unsafe practices where personal injury is not likely but property damage could occur. The caution label is in **black** type on a **white** background with a **black** border.

WARNING

A warning label directs the operator's attention to unsafe practices which could result in personal injury or severe damage to the vehicle. The warning label is in **black** type on a **gray** background with a **black** border.

DANGER

A danger label directs the operator's attention to unsafe practices which could result in serious personal injury or death. The caution label is in **white** type on a **black** background with a **black** border.

https://truckmanualshub.com/

Information For the Owner

If there are questions on the maintenance and performance of your vehicle, please discuss them with your Volvo Truck dealer. Your authorized dealer is required to have trained mechanics, special tools and spare parts to fully service your vehicle. If necessary, your dealer will contact the manufacturer for any assistance.

In addition to this Operator's Manual, there may be additional instruction/operator's manuals supplied by component manufacturers. These manuals are placed in the Owner's Package and placed in the cab. Be sure to read all the manuals thoroughly before operating the vehicle.

Also, various safety labels may be placed on components by the component manufacturer. Be sure to read and follow these labels to prevent damage to the vehicle, personal injury or even death.

Information in this manual refers to Volvo components and Volvo drivetrain. Information concerning non-Volvo engines and/or drivetrains can be obtained by contacting the respective manufacturer.

Establish a Preventive Maintenance Program with the help of your local Volvo Truck dealer. A Preventive Maintenance Program makes it possible to maximize the amount of time your vehicle is up and running, resulting in longer component life. This makes for a safer vehicle by reducing any mechanical failures due to poor maintenance practices.

Various truck warranty coverage plans, contingent on application and weight class, are available. Please contact an authorized Volvo Truck Dealer for complete details. Replacement warranty certificates for Volvo Trucks are available from Volvo dealers.

For trucks placed in service after August 1, 2000 and operating in the USA and Canada, Volvo dealers can print copies of the Standard Truck Warranty Certificate and the Premium (Purchased) Truck Coverage Certificate. Copies are available in either English or Canadian French at the dealer communication system (DCS) website. Look in the Service/Warranty folder.

NOTE! Federal law requires manufacturers to notify owners of its products in the event of a non-compliance to a Federal Motor Vehicle Safety Standard or if a safety related defect is discovered. If you are not the original owner of this vehicle, please notify us about the change in ownership at the address below or through an authorized Volvo Truck dealer. This is the only way we will be able to contact you if necessary.

Volvo Trucks North America, Inc.

Att: Vehicle Registration Dept.

P. O. Box 26115

Greensboro, NC 27402–6115

United States of America

https://truckmanualshub.com/

Do Not Remove this manual from the vehicle. It contains important operational and safety information that is needed by all drivers and owners of this vehicle.

This Operator's Manual covers Volvo VN-series vehicles manufactured by Volvo Trucks North America, Inc. with any of the following designations:

VNL42T	**VNM42T**	**VNL42**	**VNM42**
VNL64T	**VNM64T**	**VNL64**	**VNM64**

L=long hood, M=medium hood
T=tractor

Explanation: The first number after the model designation represents the total number of wheels (hubs) per vehicle. The second number represents the number of wheels (hubs) that drive the vehicle. Each model designation also carries a suffix, which identifies the cab type.

This manual, together with manuals for specific components, for example, Volvo engine, Cummins engine, Eaton transmission, etc., contain important information to be able to operate this vehicle safely. They contain advice and instructions which will enable you to get the operating economy and performance that you expect from this quality vehicle.

All information, illustrations and specifications contained in this manual are based upon the latest product information available at the time of publication. If any questions arise concerning the current status of Federal or state laws, the appropriate Federal or state agency should be contacted.

Volvo Trucks North America, Inc. reserves the right to make changes at any time or to change specifications or design without notice and without incurring obligation.

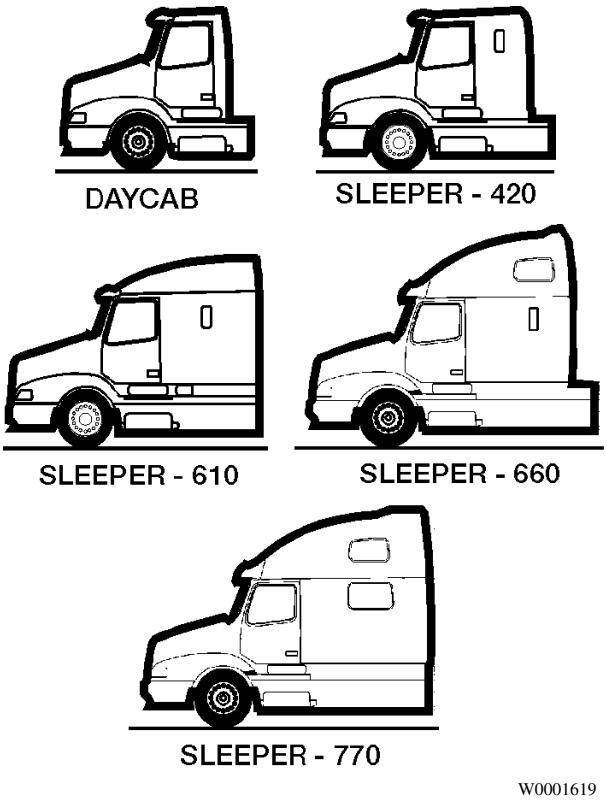

VN cab types

https://truckmanualshub.com/

General Safety Information

Operating the Vehicle

Every vehicle, including heavy duty vehicles, has blind spots. The size of blind spots varies from driver to driver and from situation to situation. As a skilled, professional driver, **you** are in the best position to avoid accidents in turns, lane changes or other maneuvers. Volvo Trucks North America, Inc. provides standard equipment (such as cabs, windshields, window sizes and mirrors), preferred by most owners and drivers under most conditions and in most applications.

However, due to differences in the size of drivers, their seating positions, the way that they use and operate their vehicles, personal preferences and other factors, no combination of mirrors and other visibility enhancement devices will eliminate all blind spots in every situation.

The safe operation of this vehicle is up to **you**. Because of your special preferences, needs and circumstances, you may want to add extra mirrors and/or other visibility enhancement devices. If so, you should contact an authorized Volvo Truck dealer to obtain those parts which best fit your own personal needs and preferences.

WARNING

All items within the cab must be secured before the vehicle is set in motion. This includes, but is not limited to, drinks, clothes, books, televisions, etc. In the event of a collision, loose items could fly around inside the cab. This could cause personal injury.

DANGER

Never try to operate or work on this vehicle while under the influence of alcohol. Your reflexes can be affected by even a small amount of alcohol. Drinking and operating this vehicle can lead to an accident, causing serious personal injury or death.

https://truckmanualshub.com/

Operating In Bobtail Mode

Tractors are equipped with a bobtail air brake proportioning valve which automatically redistributes the braking force between front and rear axles when not hooked up to a semitrailer (bobtail operation).

When operating in bobtail mode, the rear brake chambers receive reduced or proportional brake air pressure. When the tractor is towing a trailer, the rear brake chambers will receive full (normal) brake pressure.

NOTE! When operating bobtail, be certain that glad hands, trailer air hoses, electrical cable and connectors are properly stowed and secure. Do not allow them to rub or chafe on other components.

WARNING

When operating bobtail, the brake system on the vehicle reduces the possibility of rear wheel brake lockup, except on full pedal application. When bobtailing, be certain that adequate pedal pressure is applied. There is no need to reduce pedal effort. Failure to do so may result in increased stopping distances.

https://truckmanualshub.com/

Do Not Overload

This vehicle has been designed and assembled for a maximum gross vehicle weight rating (GVWR) and a maximum front and rear axle weights rating (FAWR and RAWR). The actual rating for this vehicle can be found on the label attached to the door frame on the driver's side. If any of these three ratings is exceeded and overloading occurs, instability, poor handling, failure of parts and accelerated wear can occur.

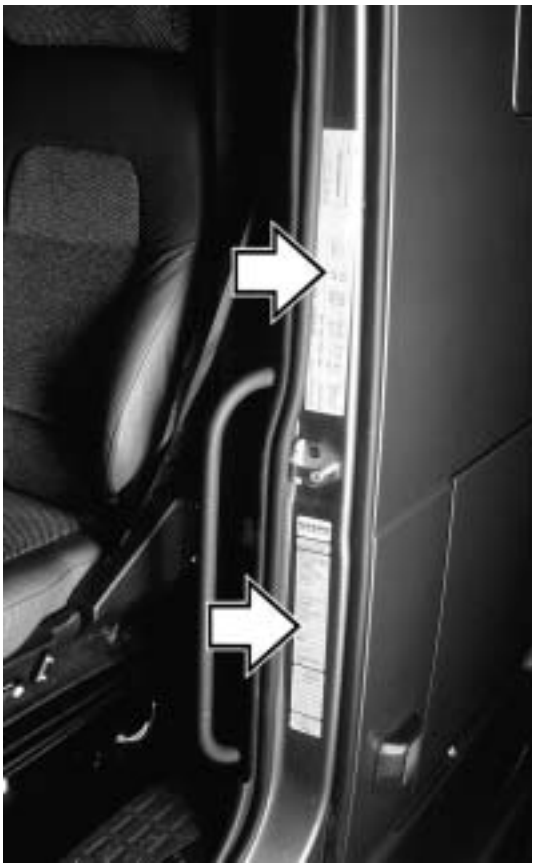

W0001210

DANGER

Under no circumstances should the published GVWR, FAWR, and/or RAWR be exceeded. Failure to observe these precautions can lead to the loss of vehicle control, resulting in a crash causing serious personal injury or death.

DANGER

Do not exceed the load rating of the tires or the vehicle weight ratings. Overloading may result in tire failure causing loss of vehicle control, leading to an accident resulting in severe personal injury or death.

Operating

Before driving this vehicle, locate the instruments and controls, and become thoroughly familiar with their operation. After starting and when driving, always check to make sure that the instrument readings are normal.

https://truckmanualshub.com/

Reporting Safety Defects

USA

The National Highway Traffic Safety Administration (NHTSA) and Volvo Trucks North America, Inc. should be informed immediately if you believe that the vehicle has a defect that could cause a crash, injury or death.

Contact NHTSA by calling the Auto Safety Hotline at 1 (800) 424–9393 (or 366–0123 in the Washington, DC area) or by writing to: NHTSA, U. S. Department of Transportation, Washington, DC 20590.

1 (800) 424-9393

Canada

Refer consumer complaints to Volvo Trucks Canada, Inc. or to the Transport Canada - Department of Public Complaints, Recalls and Investigations.

1 (905) 795-1555

Mexico

Volvo Trucks of Mexico, S.A. de C.V. should be informed immediately if you believe the vehicle has a defect that could cause a crash, injury or death. Contact Volvo Trucks de Mexico by calling or by writing to: Volvo Trucks de Mexico, S.A. de C.V., Prol. Paseo de la Reforma 600, 1er. Piso — 121, Col. Santa Fe Peña Blanca, C.P. 01210, México, D.F.

01 (800) 90 94 900

NOTE! For a listing of other contacts for information or help, see page 341.

https://truckmanualshub.com/

Modifications to Vehicle

Chassis Frame

Frame side rails are heat treated. *No welding* is permitted because structural failure may result. Do not drill through either top or bottom flanges. A warning label is also attached to the frame for information.

Drilling is permitted in the frame web in accordance with a specified hole spacing pattern. Consult a Volvo Truck dealer to obtain approved hole spacing dimensions or refer to the Frame Rail and Cross Member Service Manual.

Frame rail and cross member nuts and bolts should be checked periodically and tightened to the specified torque if necessary.

W7000519

WARNING

Do not weld on any part of the frame or drill holes in the top or bottom flanges. Serious structural damage could occur.

Frame Alterations

Under no circumstances can the frame be cut and an extension piece added to increase the wheelbase. The only alteration allowed is wheel base shortening, where the only change in the frame rail is a new hole pattern drilled for the new location of the rear suspension.

Welding In Vehicle

Do not weld anywhere in or on the vehicle before disconnecting batteries, all electronic control units (ECU) and instrument cluster. See page 298 for more information. Do not use oxy/acetylene welding to repair cab panels. Refer to the service manuals for specific information.

https://truckmanualshub.com/

Exhaust and Noise Emissions

General

USA

The Federal Clean Air Act, Section 203 (a) (3), states the following concerning the removal of air pollution control devices or modification of a certified engine to a non-certified configuration:

"The following acts and the causing thereof are prohibited:

(3) For any person to remove or render inoperative any device or element of design installed on or in a motor vehicle or motor vehicle engine in compliance with regulations under this part prior to its sale and delivery to the ultimate purchaser, or for any manufacturer or dealer knowingly to remove or render inoperative any such design after sale and delivery to the ultimate purchaser."

Specifically, please note that no person may make such changes prior to the sale and delivery of the vehicle to the ultimate purchaser, and, in addition, no manufacturer or dealer may make take such action after sale and delivery of the vehicle to the ultimate purchaser. The law provides a penalty of up to $10,000 for each violation.

Modifications, such as reprogramming of the fuel system so the engine will exceed the certified horsepower or torque, or removing the mufflers are examples of illegal changes.

Changes should not be made to a certified engine that would result in an engine that does not match the configuration of an engine model that is currently certified to meet Federal Standards.

Canada

The same conditions that apply in the USA apply to Canada, with one exception. After the vehicle is sold to a retail customer, that is, the end user, the jurisdiction controlling the emission control devices becomes the province in which the vehicle is licensed. No changes should be made that render any or all of the devices inoperative.

Should the owner/operator wish to make any changes to the emission control devices, check with the provincial authority before making any such changes.

Mexico

The same conditions that apply in the USA apply to Mexico. Refer to the Mexican Federal Law for Emission Control which adheres to EPA regulations. No changes should be made that render any or all of the emissions control devices inoperative.

Should the owner/operator wish to make any changes to the emission control devices, check with the state authority before making any such changes.

https://truckmanualshub.com/

California Emission Control Warranty Statement

YOUR WARRANTY RIGHTS AND OBLIGATIONS

The California Air Resources Board and Volvo Trucks North America , Inc. (VTNA) are pleased to explain the emission control system warranty on your vehicle. In California, new motor vehicles must be designed, built and equipped to meet the State's stringent anti-smog standards. Volvo Trucks North America, Inc. must warrant the emission control system on your vehicle for the periods of time listed below provided there has been no abuse, neglect or improper maintenance of your vehicle.

Your emission control system may include parts such as carburetor or fuel injection system and engine computer. Also included may be hoses, belts, connectors and other emission-related assemblies.

Where a warrantable condition exists, Volvo Trucks North America, Inc. will repair your vehicle at no cost to you including diagnosis, parts and labor.

MANUFACTURER'S WARRANTY COVERAGE

This warranty is appliccable for a period of five years, 100,000 miles or 3,000 hours of operation, whichever first occurs. If an emission-related part of your vehicle is defective, the part will be repaired or replaced by Volvo Trucks North America, Inc.

This is your emission control system DEFECTS WARRANTY.

OWNER'S WARRANTY RESPONSIBILITIES

As the vehicle owner, you are responsible for the performance of the required maintenance listed in your owner's manual. Volvo Trucks North America, Inc. recommends that you retain all receipts covering maintenance on your truck but Volvo Trucks North America, Inc. cannot deny warranty solely for the lack of receipts or for your failure to ensure the performance of all scheduled maintenance.

You are responsible for presenting your vehicle to a Volvo Trucks North America, Inc. dealer as soon as a problem exists. The warranty repairs should be completed in a reasonable amount of time, not to exceed 30 days.

As the vehicle owner, you should also be aware that Volvo Trucks North America, Inc. may deny you warranty coverage if your vehicle or a part has failed due to abuse, neglect, improper maintenance or unapproved modifications.

If you have any questions regarding your warranty rights and responsibilities, you should contact Volvo Trucks North America, Inc., Warranty Administration, (336) 393-2000 or the California Air Resources Board at 9480 Telstar Avenue, El Monte, CA 91731.

https://truckmanualshub.com/

EMISSION CONTROL SYSTEM WARRANTY

Volvo Trucks North America, Inc. WARRANTS TO THE ORIGINAL OWNER, AND EACH SUBSEQUENT OWNER, OF A NEW TRUCK POWERED BY A VOLVO DIESEL ENGINE THAT THE EMISSION CONTROL SYSTEM OF YOUR TRUCK:

1 Is designed, built and equipped so as to conform at the time of sale to all regulations of the U.S. Environmental Protection Agency and the California Air Resources Board applicable at the time of the manufacture; and

2 Is free from defects in material and workmanship which will cause the emission control components not to function as designed for a period of use of 5 years or 100,000 miles or 3,000 hours of engine operation, whichever comes first.

The 5 years/100,000 miles/3,000 hour warranty period shall begin on the date the vehicle is first delivered to the first retail purchaser or if the vehicle is placed in service as a demonstrator company vehicle prior to the sale at retail, on the date the vehicle is the first placed in service.

The emission control system of your new Volvo engine was designed, built and tested using genuine Volvo parts, and the engine is certified as being in conformity with Federal and California emission control regulations. Accordingly, it is recommended that any replacement parts used for maintenance, replacement or repair without invalidating this warranty; the cost of such services or or parts, however, will not be covered under the warranty except in an emergency situation. A part not being available or a repair not being completed within 30 days also constitutes an emergency.

Use of replacement parts which are not of equivalent quality may impair the effectiveness of emission control systems. If other than Volvo parts are used for maintenance, owner should obtain assurances that suck parts are warranted by their manufacturer to be equivalent to genuine Volvo parts. However, the use of other than Volvo replacement parts does not invalidate the warranty on other components, unless such parts cause damage to warranted parts.

Repairs and service covered by the warranty will be performed by an authorized Volvo Trucks North America, Inc. dealer at his place of business with no charge for parts or labor (including diagnosis) using Volvo parts for the emission control system, that requires replacement and is covered by the warranty and found defective. In case of an emergency, where an authorized Volvo Trucks North America, Inc. dealer is not available, repairs may be performed at any available service establishment or by the owner, using any equivalent replacement parts and Volvo Trucks North America, Inc. will reimburse the owner for such repairs (including diagnosis) not to exceed Volvo Trucks North America, Inc's suggested retail retail price for the warranted parts and the labor rate appropriate for the geographical area and the tasks performed.

Replaced parts and paid invoices must be presented to a Volvo Trucks North America, Inc. dealer for reimbursement.

https://truckmanualshub.com/

The emissions control parts covered by this Emission Control System Warranty are listed under "What Is Covered by the Emissions Warranty." You are responsible for the performance of all required maintenance on your new Volvo engine, including maintenance or repairs needed due to severe operating conditions. Volvo Trucks North America, Inc. will not deny a warranty claim solely because you have no record of maintenance. However, Volvo Trucks North America, Inc. may deny a warranty claim if your failure to perform required maintenance resulted in the failure of a warranted part. Receipts covering the performance of regular maintenance should be retained in the event questions arise concerning maintenance. The receipts should be transferred to each subsequent owner of the vehicle with the emission warranted engine.

CUSTOMER ASSISTANCE

Volvo Trucks North America, Inc. wishes to help to assure that the Emission Control System Warranty is properly administered. In the event that you do not receive the warranty service to which you believe you are entitled under the Emission Control System Warranty, you should contact Volvo Trucks North America, Inc. Warranty Administration, (336) 393-2000. The address and telephone number of each Regional Office is in your vehicle owner's manual. If you need additional assistance or information concerning the Emission Control System Warranty, contact: Volvo Trucks North America, Inc., Warranty Administration, (336) 393-2000.

WHAT IS NOT COVERED BY THE EMISSION WARRANTY

This warranty does not cover:

1 Malfunctions in any part caused by any of the following: misuse, abuse, improper adjustments unless performed by a Volvo Trucks North America, Inc. dealer, modifications, alterations, tampering, disconnection, improper or inadequate maintenance, or use of fuels not recommended for the engine as described in the owner's manual.
2 Damage resulting from accident, acts of nature or other events beyond the control of Volvo Trucks North America, Inc.
3 The replacement of expendable maintenance items such as filters, hoses, belts, oil, thermostat and coolant made in connection with scheduled maintenance services once these parts have been replaced. Any parts replaced under warranty before the first required replacement point are warranted for the remainder of the warranty period.
4 Replacement items which are not genuine Volvo parts or not authorized by Volvo Trucks North America, Inc.
5 Loss of time, inconvenience, loss of use of vehicle or engine, or commercial loss.
6 Any vehicle on which the odometer or hourmeter has been disconnected or the mileage (or hours) has been altered so the actual usage cannot be readily be determined.
7 Any vehicle registered and normally operated outside the United States.

https://truckmanualshub.com/

WHAT IS COVERED BY THE EMISSION WARRANTY

The following is a list of the items that are considered a part of the Emission Control Systems and are covered by the Emission Warranty when installed as original equipment by Volvo Trucks North America, Inc. on vehicles which were built to conform to Environmental Protection Agency and California Air Resources Board regulations

IMPORTANT - This may not include expendable maintenance items. Emission related parts requiring scheduled maintenance are warranted until their first scheduled replacement point.

I. Fuel Injection System

II. Air Induction System

- A. Intake Manifold
- B. Turbocharge System
- C. Charge Air Cooler (Intercooler)

III. Exhaust Manifold

IV. Miscellaneous Items Used in Above Systems

- A. Hose, clamps, fittings and tubing
- B. Pulleys, belts and idlers
- C. Vacuum, temperature, and time sensitive valves and switches
- D. Mounting hardware, sealing gaskets and PVC (if applicable)

THIS CALIFORNIA EMISSION CONTROL WARRANTY STATEMENT IN NO WAY REPLACES, MODIFIES, ALTERS OR SUPERSEDES THE TRUCK WARRANTY CERTIFICATE, ITS TERMS AND CONDITIONS, AND ITS LIMITATIONS AND EXCLUSIONS.

BE CERTAIN YOU READ AND UNDERSTAND ALL WARRANTIES WHICH ACCOMPANIED YOUR VEHICLE.

NOTE! Warranty coverage is subject to change without notice. Contact your Volvo Truck dealer for the current warranty statement.

https://truckmanualshub.com/

Noise Emissions

Volvo Trucks North America, Inc. warrants to the first person who purchases this vehicle for purposes other than resale and to each subsequent purchaser, that this vehicle as manufactured by Volvo Trucks North America, Inc. was designed, built and equipped to conform, at the time it left the control of Volvo Trucks North America, Inc., with all applicable U.S. EPA Noise Control Regulations.

This warranty covers this vehicle as designed, built and equipped by Volvo Trucks North America, Inc., and is not limited to any particular part, component or system of the vehicle manufactured by Volvo Trucks North America, Inc. Defects in design, assembly or in any part, component or system of the vehicle as manufactured by Volvo Trucks North America, Inc., which, at the time it left the control of Volvo Trucks North America, Inc. caused noise emissions to exceed Federal standards, are covered by this warranty for the life of the vehicle.

https://truckmanualshub.com/

Tampering with Noise Control System

Federal law prohibits the following acts or the causing thereof:

(1) The removal or rendering inoperative by any person, other than for purposes of maintenance, repair, or replacement, of any device or element of design incorporated into any new vehicle for the purpose of noise control prior to its sale or delivery to the ultimate purchaser or while it is in use;

or

(2) the use of the vehicle after such device or element of design has been removed or rendered inoperative by any person.

Among those acts presumed to constitute tampering are the acts listed below:

Air Intake System

Removing or rendering inoperative the air cleaner or intake piping.

Engine Cooling Fan

Removing or rendering inoperative the fan clutch.

Removing the fan shroud.

Engine

Removing or altering engine speed programming so as to allow engine speed to exceed manufacturer's specifications.

Modifying the parameters of the Engine Electronic Control Unit.

https://truckmanualshub.com/

Fuel System

Removing or altering engine speed programming so as to allow engine speed to exceed manufacturer's specifications.

Inner Fender Shields and Cab Skirts

Removing shields or skirts.

Cutting away parts of shields, skirts or damaged or loose portions of shields or skirts.

https://truckmanualshub.com/

Vehicle Data

Identification and Labels

It is extremely important that the correct vehicle model and serial number are given whenever replacement parts or service literature are ordered. Using these numbers, as well as giving the major component model and serial numbers, will prevent delay and errors in obtaining the correct material. Space is given on the rear inside cover of this manual for noting the main component model and serial numbers.

The full 17–digit Vehicle Identification Number (VIN) is shown on the Vehicle Identification label located in the door opening on the driver's side (see next page). The 8–digit chassis number is embossed into the bottom flange right hand side of the frame rail and the top flange left hand side of the frame rail, 42 inches (1065 mm) back from the front edge of the frame rail. The use of this number is very helpful when ordering parts for your vehicle.

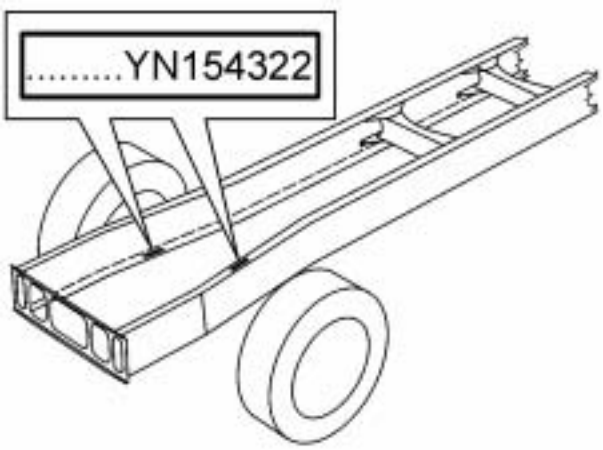

W0001995

Vehicle Order

The Vehicle Order is a complete and detailed record of all data pertaining to the assembly of the vehicle. It should be filed in the Owner's office where it will be readily available for reference. Any changes made to the vehicle must become a part of the Vehicle Order and must comply with all applicable Federal Motor Vehicle Safety Standards.

https://truckmanualshub.com/

Identification and Certification Labels

There are two labels that are located on the rear, lower face of the driver side door frame. These should be part of the vehicle at all times.

The VIN is shown on the Vehicle Identification label. The VIN includes the vehicle make, model series, weight class, engine model, where the vehicle was built and the vehicle serial number. This label also shows the truck model designation, major component model and serial number, cab model and serial number, cab and chassis paint colors, and color numbers.

On the upper part of the door frame is the Certification label showing the axle and load ratings for the vehicle as it was built. Do not exceed these ratings by overloading.

NOTE! To deter tampering with the original build information, the information on the label will be destroyed if label is removed. If for any reason a label is damaged, contact your Volvo Truck dealer for a replacement.

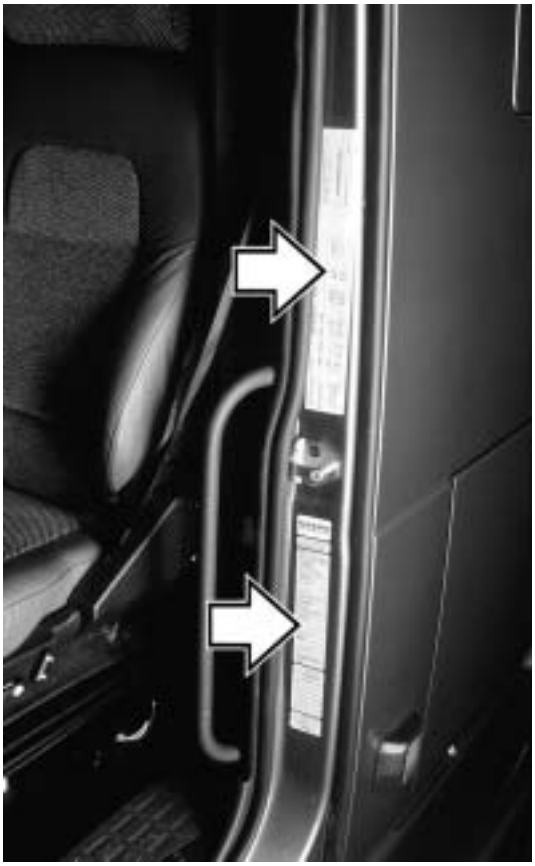

W0001210

Noise Emission Control

A Noise Emission Control label is located on the left end of the dash. It is the Owner's responsibility to maintain the vehicle so that it conforms to EPA regulations.

Refer to page 14 for a listing of what constitutes tampering with the Noise Emissions Control.

W0001458

https://truckmanualshub.com/

Components

The Volvo D12 engine serial number is located on the rear, left side of the cylinder block.

There is also a label on the engine electronic control unit that shows the engine serial number.

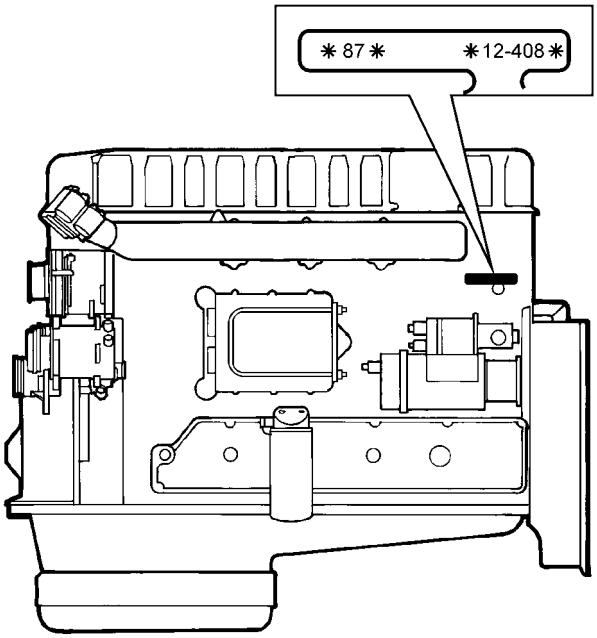

W0001529

The Volvo D7 engine serial number is located on the rear, left side of the cylinder block.

There is also a label on the rear valve cover that shows the engine serial number.

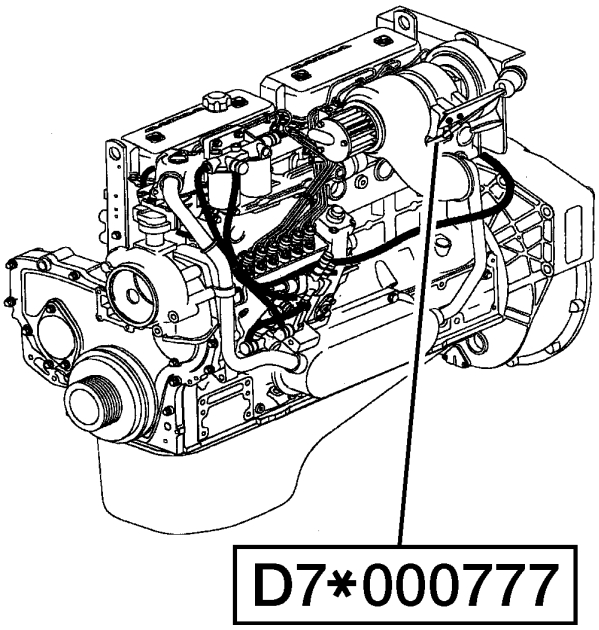

W2002707

https://truckmanualshub.com/

The rear axle model and serial number is located on the right side of the transfer gear housing on the tandem front axle. It is located on the left side of the differential housing on the tandem rear axle and on the right side of the single axle.

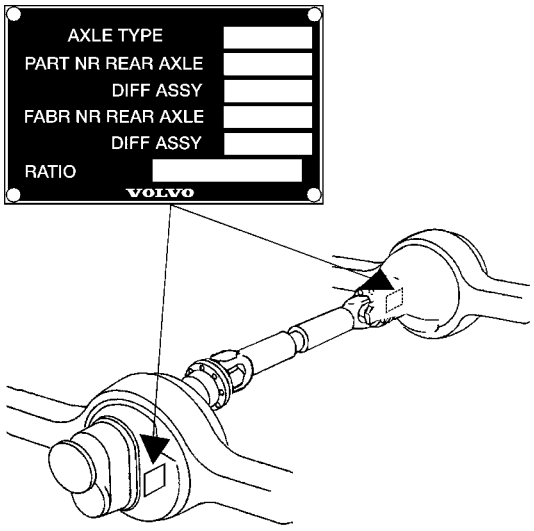

W4000894

https://truckmanualshub.com/

Cab Doors and Door Lock

The cab door is unlocked with the same key used for the ignition lock. Keys can be made to fit only one vehicle or all the vehicles in a fleet of Volvos. A tool for changing bulbs in the instrument cluster is included on the keychain.

W0001231

Key code at the end of keychain

The key fits in the door lock either way. Insert the key and turn it 1/4 turn counterclockwise to unlock or clockwise to lock the door.

NOTE! The vehicle is delivered with 2 identical keys. If more keys are needed, order them through your Volvo Truck authorized dealer. The keys are laser cut and require a special machine for copying, available through the dealer. Record the key code and keep it in a secure place. A new key can be made if the keys are lost.

The door locks are mechanically or electrically operated. The lock is activated by either the key from the outside or the door lock handle from the inside. With mechanical locks, only one door can be locked/unlocked at a time. With electrical locks, both doors will be locked/unlocked by operating either the key or the inner door lock handle on either side.

To lock either door from the inside, push the door lock handle forward. The handle will stay in place, indicating the door is locked. It can be unlocked without opening the door by moving the door lock handle to the middle position.

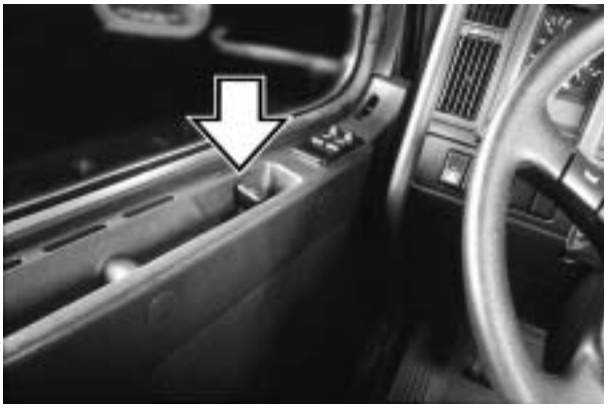

W8001462

No door can be locked while it is still open. The door must be closed for the lock to work. In the event of a power failure the electrical lock system reverts back to a mechanically functioning system.

https://truckmanualshub.com/

The door has a position lock that enables the door to remain open in two different positions. An indented bar is holding the door at approximately 30° and in the fully open position at approximately 85°.

To close the door from the inside, place the hand in the handhold and pull the door in.

W8001854

DANGER

To lessen the chance of being thrown from the vehicle in case of an accident, always lock the door and wear the safety belt while driving. Failure to do so can cause serious personal injury or death if involved in an accident.

CAUTION

Do not shut the door by pushing on the door panel. Hard pushing may distort the metal in the door panel.

To close the door from the outside, place the hand flat against the door lock area and push the door shut.

W8001853

https://truckmanualshub.com/

Cab Entry and Exit

General

DANGER

Do not stand on the steps or any other part of the vehicle while it is in motion. The steps and the back of cab access deck plates are **only** for entering/exiting the vehicle and not for riding on. Failure to heed this warning can result in serious personal injury or death.

WARNING

Wearing shoes with soles that are dirty or wet increases the chance of slipping and falling. Be careful when entering the cab with dirty or wet soles.

WARNING

Both the operator and passenger should exercise caution when entering or exiting the cab. Use the steps and grab handles to safely get in and out of the cab to prevent injuries related to a slip and fall.

DANGER

Steps are designed to be slip resistant and to provide a stable surface for entering or exiting the cab. However, accumulation of ice, dirt, lubricants, etc. on the steps can make entering or exiting hazardous. Always make sure the steps are free from slippery substances. Failure to follow this guideline may result in a fall that can cause serious personal injury or death.

W8000928

The steps on the vehicle are designed to conform with the requirements of 49 CFR 399. You should familiarize yourself with this Federal regulation.

https://truckmanualshub.com/

General Entry Guidelines

1 *Always* have three limbs (one foot and two hands or two feet and one hand) in contact with the vehicle at all times when entering or exiting the cab or the area behind the cab.

2 Be certain you have a firm handhold and/or stable foot position before transferring weight to that position. For example, do not start to put weight on a foot until you are certain your foot is properly on the step and will not slip when you transfer your weight.

3 *Do not* climb on top of the frame, fuel tanks or storage boxes to make trailer hook-ups.

4 If the vehicle is equipped with air fairings, do not use the side mounted fairing (wind deflector) brackets and braces as steps or grab handles.

5 Be certain that the grab handles are clear of snow, mud, ice or other substances that could make them slippery before using them. Do not use steps or grab handles if they are slippery or damaged.

6 Be certain that all grab handles, steps and related parts are in good working condition. Any defects should be reported and repaired before using the grab handles and steps.

7 *Do not* step on the curved surface of the fuel tanks. They may be slippery from snow, mud, ice, water, spilled fuel or other slippery substances.

8 If a step is mounted to the top of the battery box, be certain that the battery box cover is properly fastened before stepping.

9 *Do not* jump from the cab or from the steps to the ground.

10 *Always* face the cab when entering or exiting.

11 *Do not* hold anything in your hands when entering or exiting the cab or the area behind the cab. Log books, cups, clipboards, jackets, luggage and the like can be placed on the cab floor or rear deck plate before entering or exiting.

12 Be sure to disconnect the safety belt before exiting the cab.

13 Be sure that the safety belt is fully retracted and out of the way prior to entering or exiting the cab.

14 Do not put your foot on any surface that does not have slip resistant, self cleaning material. If there is no step material, the surface may be slippery and you could fall.

15 Before entering or exiting, be certain that the soles of your shoes/boots are free from grease, mud or any other substance which could make them slippery.

16 Always put the foot flat on the top of the step. Do not place your foot on the side or edge of the step.

BE SURE TO FOLLOW ALL OF THESE INSTRUCTIONS BEFORE ENTERING OR EXITING THE CAB OR THE AREA BEHIND THE CAB.

https://truckmanualshub.com/

Driver Side Entry/Exit

Open the door. Place any hand-carried items on the cab floor. Grasp the right grab handle with your right hand and the left grab handle with your left hand. Put your right foot fully on the bottom step and pull yourself up to the opening.

Slide hands up on the handles, if necessary. Put your left foot on the top step and step up. Step into the cab with your right foot first.

To exit, reverse the process. Do not attempt to exit the cab while carrying any items in your hands.

W0001223

WARNING

On vehicles without side fairings, always make sure that the battery box cover is securely fastened before stepping up. Failure to fasten the cover may lead to personal injury.

Passenger Side Entry/Exit

Open the door. Place any hand-carried items on the cab floor. Grasp the left grab handle with your left hand and the right grab handle with your right hand. Put your left foot fully on the bottom step and pull yourself up to the opening.

Slide hands up on the handles, if necessary. Put your right foot on the top step and step up.

Step into the cab with your left foot first.

To exit, reverse the process. Do not attempt to exit the cab while carrying any items in your hands.

W0001228

https://truckmanualshub.com/

Behind the Cab Entry

When trailer air and electrical connections can not be coupled from the ground, Federal Regulations require commercial carriers to provide back-of-cab access steps, grab handles and plates.

Depending on what option is chosen, grab handles are available in many variations. In each case, make sure to always have three limbs (one foot and two hands or two feet and one hand) in contact with the vehicle at all times when entering or exiting the area behind the cab.

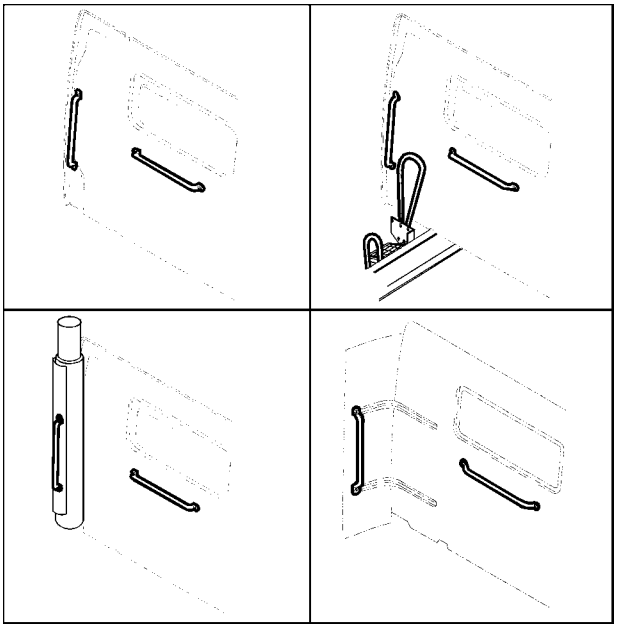

W8001363

WARNING

Wearing shoes with soles that are dirty or wet increases the chance of slipping or falling. Be careful when entering the back-of-cab area with dirty or wet soles.

Grasp the grab handle to the left with both hands. Put the left foot onto the bottom step and pull yourself up. Put the right foot on the top step and step onto the deck plate with the left foot.

WARNING

Always perform trailer hook-ups while standing on the ground. **Do not** climb on top of fuel tanks or frame rails to hook up or disconnect trailer air lines and electrical cord, or serious injuries could result from a slip and fall.

W9000077

https://truckmanualshub.com/

Stand on the ground when connecting the air and electrical connections to the trailer.

W5000713

Entering Sleeper From Seat

Standard Gear Lever

When moving from the driver seat to the sleeper section, follow this procedure:

- Make sure the parking brakes are set
- Place the gear shift lever in a gear position toward the rear of the vehicle
- If equipped with an adjustable steering column, move the steering wheel up and forward
- Place the left hand on the steering wheel and the right hand on the top of the gear lever
- Move the right foot out to the middle of the floor
- Lift the upper body, supported by the hands on the steering wheel and the gear lever and step out from the seat area.

W8002037

https://truckmanualshub.com/

Folding Gear Lever (option)

When moving from the driver seat to the sleeper section, follow this procedure:

- Make sure the parking brakes are set
- To release the gear lever, pull the lever toward the seat and press on the knob downward in a straight line.

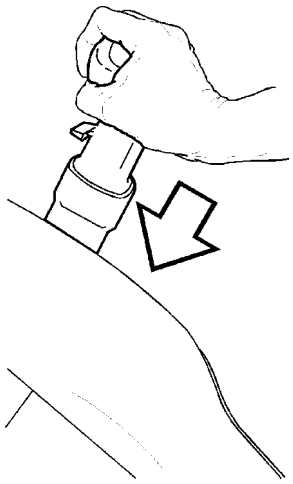
W4001388

- Twist the lever counterclockwise while holding pressure on the knob. When releasing the pressure, the springloaded lever will be pushed up out of the locked position.

W4001389

- Lift and fold the gear lever straight back, parallel with the seat. It will come to rest in the folded position.

  NOTE! If the lever is not folded straight back, it may not be able to travel the full distance.

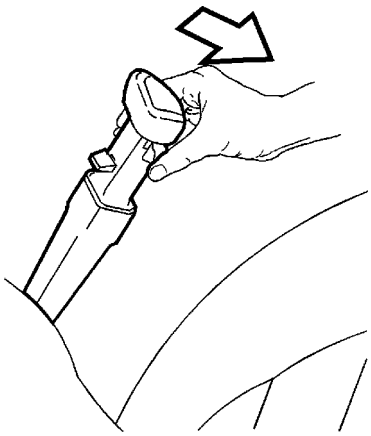
W4001390

https://truckmanualshub.com/

- If equipped with an adjustable steering column, move the steering wheel up and forward
- Place the left hand on the steering wheel and the right hand on the top of the dash
- Move the right foot out to the middle of the floor
- Lift the upper body, supported by the hands on the steering wheel and the dash and step out from the seat area.

DANGER

When locking the gear lever in place again, follow the procedure on page 271. Failure to lock the gear lever properly into place can cause loss of control of vehicle, leading to serious personal injury or death.

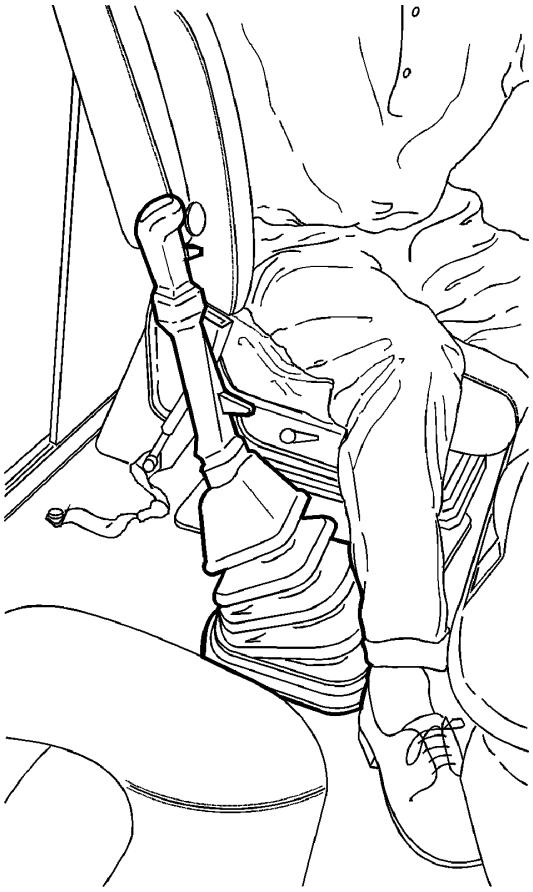

W4001391

https://truckmanualshub.com/

Luggage Compartment

To gain access to the luggage compartments, there is a pull-ring connected to the lock, located at the lower rear corner of the cab door opening on each side. Pull ring to unlock the door. The lock has a safety catch that will hold the door in place, even if the door is not fully locked. To open door, hold pull-ring out while pulling the door out.

W8000984

The door swings out from the bottom on hinges mounted on the top. To assist in opening and to hold the door open, there are two compressed gas cylinders mounted on each door. The door will swing up by itself when pulled out a short distance and then released. If the light switch is set on automatic, the light will come on when the door opens.

W8001073

Safety equipment and tow hooks are stored in the luggage compartments. If equipped, the sleeper heater and air conditioning unit is located in the passenger side luggage compartment.

W1000139

WARNING

Always place heavy objects in the luggage compartment. Sudden stops or sudden turns could cause personal injury if heavy objects fall from overhead storage shelves.

https://truckmanualshub.com/

Hood

The hood is locked down by two latches, one on each side of the back end of the hood. The latches are operated by a handle on the bottom edge of the dashboard.

W8000986

Pull the bottom of the handle out to release hood. The hood will be raised about two inches off its resting position and remain there.

Make sure the hood can be opened fully without hitting anything. Stand sideways in front of the hood with feet in line with the vehicle. Place feet well apart and grasp the recessed handle in the front part of the hood. Transfer the body weight by leaning away from the hood. Lift the hood until it is past the balance point. Release the hood and let it complete the opening movement unaided.

W8000982

Two restraint cylinders will engage during the last part of the opening. The cylinders will slow and dampen the hood down to its resting position.

WARNING

Make sure that no one is in the way of the hood when closing. The hood could injure a person in the way while being lowered.

To close the hood, stand with feet well apart and place the hands along the front edge of the hood. Bend the knees and let the leg muscles do the work when lifting.

W8000983

Raise the hood up to the halfway point. Carefully guide the hood down with enough speed that the hood latches lock the hood in place when it comes to its normal resting position.

https://truckmanualshub.com/

Manual Hood Opening

In the event of a malfunction in the hood opening mechanism, the hood latches can be manually operated through an opening in the wheelwell splash shield. The opening is normally covered by a plate.

To access the opening, remove the two screws using a T30 Torx screwdriver. Remove the cover plate.

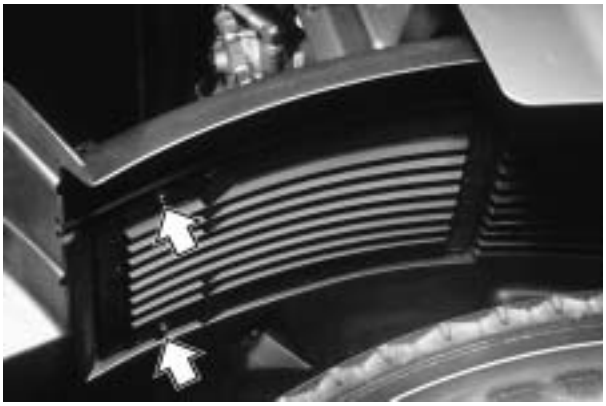

W8002389

The hood latch can now be accessed through the hole. Operate the latch manually by pushing the lever in toward the engine. Do the same on the other side.

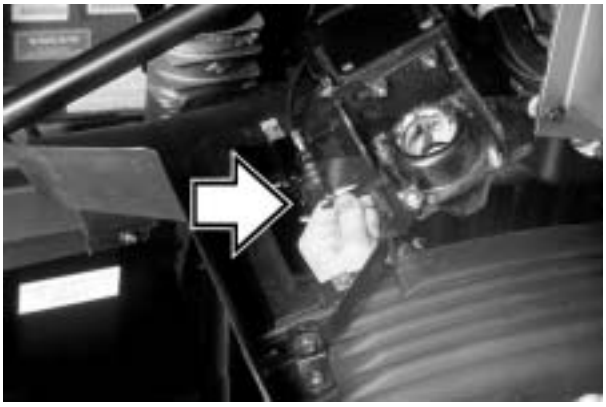

W8000981

https://truckmanualshub.com/

General

DANGER

Before working on or inspecting a vehicle, set the parking brakes, place the transmission in neutral and block the wheels. Failure to do so can result in unexpected vehicle movement and can cause serious personal injury or death.

Safety is the most important and obvious reason for doing a pre-trip inspection. Federal and state laws require inspection done by the driver. Federal and state inspectors also inspect commercial vehicles. An unsafe vehicle can be placed “out of service” until the driver or owner corrects the deficiency. Owners and operators should familiarize themselves with sections 49 CFR 396.11 and 396.13 concerning Federal requirements for vehicle inspection. Certain other laws may also apply.

Section 49 CFR 396.13 states that all motor carrier drivers must complete a written report at the end of each work day for each vehicle operated, covering most of what is covered in the pre-trip list. The report should list all defects or deficiencies discovered by the driver. Doing a pre-trip inspection prepares for the end-of-work report.

Starting on the next page are suggested guidelines to be used in performing truck, tractor and trailer pre-trip inspections. Depending on the application of the vehicle being used, these guidelines should be modified to include other necessary inspection points. For example, steps and grab handles should be checked daily on refuse trucks because the operator is getting in and out of the cab more frequently.

If any component or system does not pass this inspection, it must be corrected before operating the vehicle. Whenever equipment requires adjustment, replacement, repair or lubrication, refer to the Service Manuals or contact a Volvo Truck dealer for the correct procedures, specifications and intervals.

Take your time going through the pre-trip inspection. Remember that a careful pre-trip inspection saves time by eliminating unscheduled stops for correcting a faulty item.

The following information has been provided by the American Trucking Association as developed by the D.O.T. Office of Motor Carriers (BMCS).

https://truckmanualshub.com/

Pre-Trip Inspection Quick List

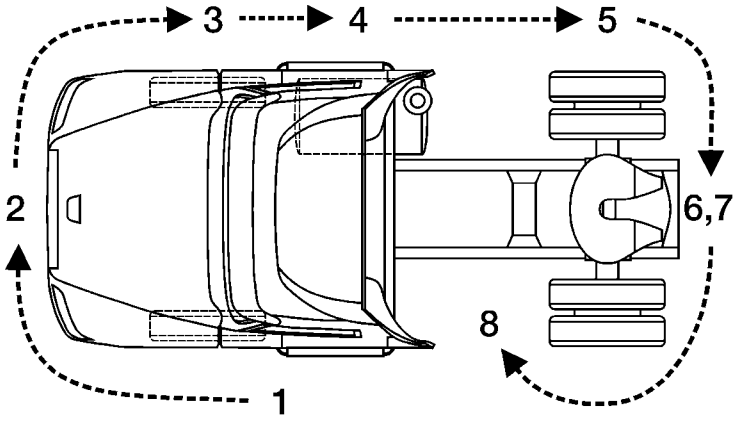

W0001230

Inspect the vehicle in a circular manner as shown in the illustration. Numbers between parentheses in the list, refer to pages in this manual where component function and necessary inspection is explained in greater detail.

Approaching the Vehicle

- Check under the vehicle for oil, fuel, coolant leaks or other signs of damage.
- Check body surfaces for signs of breaks or damage.

Preparation

- Open drain cocks on air tanks to let the tanks drain (page 283).
- Chock wheels on vehicle and, if hooked up, trailer.
- Close air tank drain cocks.
- Start the engine and let the air pressure build up to normal (page 273). Stop engine.
- Switch on parking lights and four-way flashers (page 99).
- Apply parking brakes (page 278).
- Release the hood latches (page 30). Raise hood.

Step 1: Left Side Of the Cab

Left Front Wheel

- Check condition of wheel rim. Especially look for cracks, missing lockrings, bent or broken studs, clamps or lugs.
- Check condition of tire: properly inflated, no serious cuts, bulges, tread wear or any signs of misalignment; valve stem not touching wheel, rim or brake drum; valve cap in place.
- Check wheel bearing and hub: no obvious leaking on outside or inside wheel. Verify correct oil level in hub.

Left Front Suspension

- Check condition of spring, spring hangers, shackles, U-bolts: no cracks, breaks or shifting.
- Check shock absorber condition.

https://truckmanualshub.com/

Step 1: Left Side Of the Cab (cont.)

Left Front Brake

- Condition of brake drum. With brakes released, look for a noticeable gap between lining and drum (This check cannot be made if dust covers are in place).
- Condition of brake air hose.
- Check brake chamber mounting bolts and bracket.
- Check slack adjuster and chamber pushrod travel.

Condition of Front Axle and Steering System, Left Side

- No loose, worn, bent, damaged or missing parts.

Under Hood, Left Side

- Check coolant hose condition.
- Check condition of fan drive belts.
- Check engine and surrounding areas for coolant, oil and fuel leaks.
- Check wiring harnesses for signs of damage.

Step 2: Front Of Cab Area

Condition of Windshield

- Check for damage and clean if dirty (page 48).
- Check windshield wiper arms for proper spring tension.
- Check wiper blades for any damage, “dead” rubber and securement to arm.

Lights and Reflectors

- Lower hood and inspect parking, clearance and identification lights on hood and cab. They should be clean, operating and of the proper color.
- Reflectors clean and proper color.
- Turn on headlights. High and low beams should be operating and lenses clean. If equipped, check daytime running lights.
- Left and right front turn signal lights clean, operating and proper color. Raise hood.

Grille

- Check that charge air cooler and radiator or bugscreens are clean and undamaged.

Step 3: Right Side Of Cab Area

Right Front Wheel

- Check condition of wheel rim. Especially look for cracks, missing lockrings, bent or broken studs, clamps or lugs.
- Check condition of tire: properly inflated, no serious cuts, bulges, tread wear or any signs of misalignment; valve stem not touching wheel, rim or brake drum; valve cap in place.
- Check wheel bearing and hub: no obvious leaking on outside or inside wheel. Verify correct oil level in hub.

https://truckmanualshub.com/

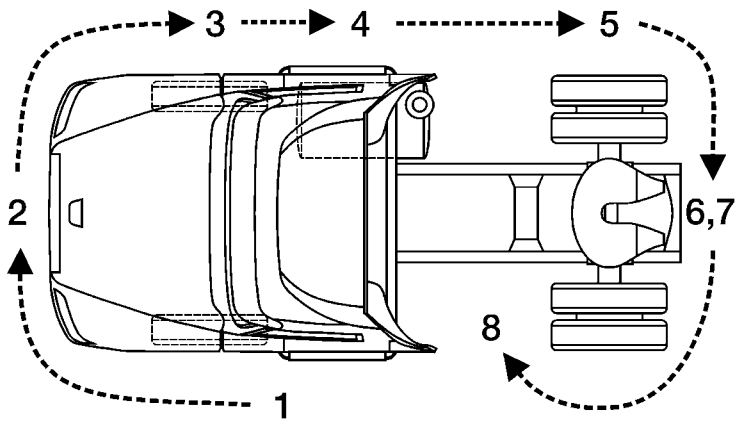

W0001230

Step 3: Right Side Of Cab Area (cont.)

Right Front Suspension

- Check condition of spring, spring hangers, shackles, U-bolts: no cracks, breaks or shifting.
- Shock absorber condition.

Right Front Brake

- Condition of brake drum. With brakes released, look for a noticeable gap between lining and drum (This check cannot be made if dust covers are in place).
- Condition of brake air hose: check for any chafing.
- Check brake chamber mounting bolts and bracket.
- Check slack adjuster and chamber pushrod travel. With brakes applied or released, look for conspicuously different positions of the slack adjusters.

Condition of Front Axle and Steering System, Right Side

- No loose, worn, bent, damaged or missing parts.

Under Hood, Right Side

- Check condition of coolant and heater hoses.
- Check condition of fan drive belts.
- Check engine and surrounding areas for coolant, oil and fuel leaks.
- Check fuel separator sight glass and drain if necessary. Check for leaks.
- Check wiring harnesses for signs of damage.
- Check air filter with brackets and hoses for loose connections or damage. Check filter gauge, if mounted on the filter.

Step 4: Right Saddle Tank Area

Right Fuel Tank(s)

- Securely mounted and not damaged or leaking.
- Fuel lines secure and not leaking. Check that shut-off valves are open.
- Tank(s) full of fuel. Cap on and secure.

https://truckmanualshub.com/

Condition of Visible Components

- Rear of engine: not leaking.
- Transmission: not leaking. If equipped with oil cooler, check for leaks or that air-to-air cooler is not blocked.
- Check drive shaft.
- Exhaust system: secure, not leaking, not touching wires, fuel or air tubing.
- Frame and cross members: no bends, cracks or breaks.
- Air tubing and electrical wiring: secured against snagging and chafing.

Step 5: Right Rear Vehicle Area

Dual Wheels, One Or Two Axles

- Check condition of wheels and rims. Especially look for cracks, missing lockrings, bent or broken spacers, studs, clamps or lugs.
- Check condition of tires: properly inflated, no serious cuts, bulges, tread wear or any signs of misalignment; valve stems not touching wheels, rims or brake drums; valve caps in place and no objects stuck between the wheels.
- Check that both tires are of same type, for example, not mixed radial and bias type and that their circumferences are matched.
- Check wheel bearing and hub: no obvious leaking on outside or inside wheel.

Suspension

- Check condition of springs (leaf or air), spring hangers, shackles and U-bolts.
- Axle alignment.

Brakes

- Condition of brake drums. With brakes released, look for a noticeable gap between lining and drum (This check cannot be made if dust covers are in place).
- Condition of brake hoses: check for any chafing.
- Check brake chamber mounting bolts and brackets.
- Check slack adjusters and chamber push rod travel. With brakes applied or released, look for conspicuously different positions of the slack adjusters.
- Check spring brakes.

Step 6: Rear Of Vehicle Area

Frame Area

- Frame or cross members not bent, cracked or otherwise damaged or missing.
- Check that air tubing and electrical lines are properly secured to the frame with no damage or chafing.

Lights and Reflectors

- Tail lights, brake lights and turn signal lights: operating, clean and proper color.

https://truckmanualshub.com/

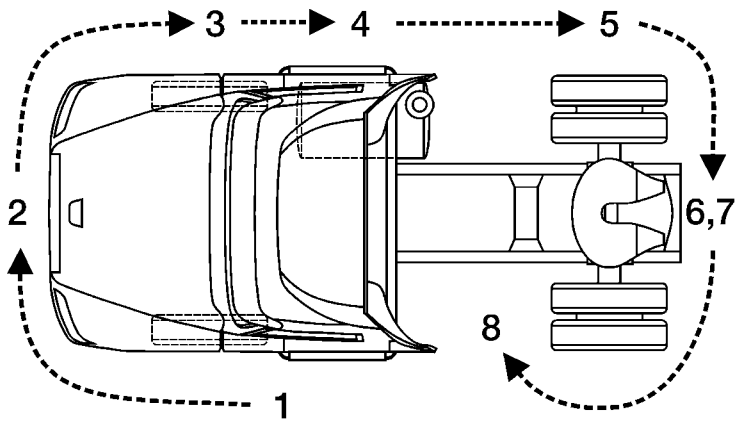

W0001230

Step 7: Coupling System Area

Fifth Wheel

- Securely mounted to the frame.
- No missing or damaged parts.
- Check that trunnion and plate are properly lubricated (page 318).

Sliding Fifth Wheel

- Mechanism not worn, bent, damaged or parts missing (page 320).
- Properly lubricated.
- All locking pins present and locked in place.
- If air operated: no air leaks.

Air Tubing and Electric Lines Visible From This Point

- Should be secure from dangling.
- Both air lines and electric line should be free from damage, oil and grease.

Step 8: Left Saddle Tank and Left Rear Vehicle Wheels Area

Dual Wheels, One Or Two Axles

- Check condition of wheels and rims. Especially look for cracks, missing lockrings, bent or broken spacers, studs, clamps or lugs.
- Check condition of tires: properly inflated, no serious cuts, bulges, tread wear or any signs of misalignment; valve stems not touching wheels, rims or brake drums; valve caps in place and no objects stuck between the wheels.
- Check that both tires are of same type, for example, not mixed radial and bias type and that their circumferences are matched.
- Check wheel bearing and hub: no obvious leaking on outside or inside wheel.

Suspension

- Check condition of springs (leaf or air), spring hangers, shackles and U-bolts, no cracks, breaks or shifting.

https://truckmanualshub.com/

Brakes

- Condition of brake drums. With brakes released, look for a noticeable gap between lining and drum (This check cannot be made if dust covers are in place).
- Condition of brake hoses: check for any chafing.
- Check brake chamber mounting bolts and brackets.
- Check slack adjusters and chamber push rod travel. With brakes applied or released, look for conspicuously different positions of the slack adjusters.
- Check spring brakes.

Condition of Visible Components

- Transmission: not leaking.
- Drive shaft: looks OK.
- Exhaust system: secure, not leaking, not touching wires, fuel or air tubing.
- Frame and cross members: no bends, cracks or breaks.
- Air tubing and electrical wiring: secured against snagging and chafing.

Left Fuel Tank(s)

- Securely mounted and not damaged or leaking.
- Fuel lines secure and not leaking. Check that shut-off valves are open.
- Tank(s) full of fuel. Cap on and secure.

Battery Area

- Open the battery box (page 294). Battery box securely mounted to vehicle.
- Batteries secured against movement (page 294).
- Battery cases not broken or leaking. Battery cables free from damage.
- Tops of batteries and terminals clean and free from foreign material.
- If equipped, replace battery lid and make sure it is securely fastened (page 295).

https://truckmanualshub.com/

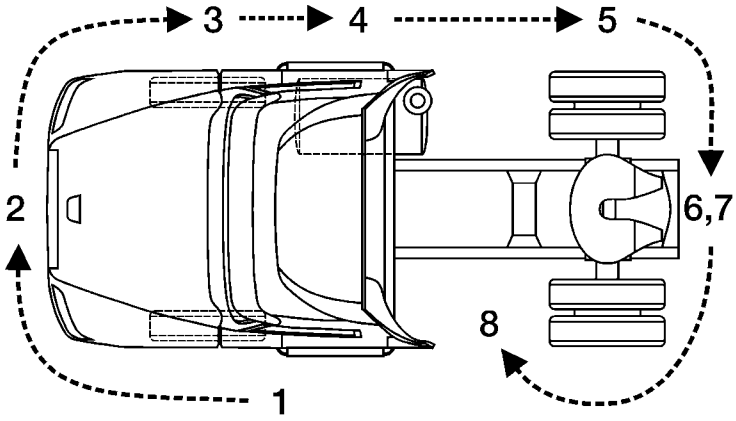

W0001230

In the Cab

- Check steps and grab handles for looseness or breakage (page 23). Also, clean them if there is any substance that makes them slippery, which makes cab entry/exit hazardous.
- Start the engine. If equipped, check that exhaust rain cap opens when accelerating engine.
- Check gauges and telltale light function (page 85).
- Check function of low air warning (page 91). Check the Graphic Display for any fault codes (page 114).
- Check clutch function (page 269). If equipped, check for clutch brake function.
- Check windshield wipers and washers (page 47) and horns, including backup alarm, if equipped.
- Clean inside windshield, door windows and instruments. Clean mirrors.
- Check climate control and defroster (page 174). If equipped, check mirror heater.
- Check condition of warning triangles, fire extinguisher and flares (page 68).
- Adjust the seat (page 195). Check mirror adjustment.
- Check safety belts for function and damage (page 55).
- Apply service brakes. After initial drop, pressure should hold steady, or increase slightly, with engine at idle.
- Check steering wheel for excessive free play.
- Check for loose items in the cab. Secure them if necessary.

https://truckmanualshub.com/

Hooking Up To Trailer

Hook-up Preparation

- Check kingpin and mounting plate on trailer, free from wear, bends or damage.
- Chock trailer wheels.

Fifth Wheel Or Trailer Hitch

- No visible space between fifth wheel and trailer (page 326).
- Locking jaws around the shank and not the head of kingpin (page 326).
- Release lever properly seated and safety latch/lock engaged (page 327).
- Check all connections to dolly or trailer hitch and safety chains are secured.
- Check function of trailer air supply valve and trailer brakes.

Sliding Fifth Wheel

- Check that fifth wheel is not so far forward that the tractor frame will strike the landing gear during turns.

https://truckmanualshub.com/

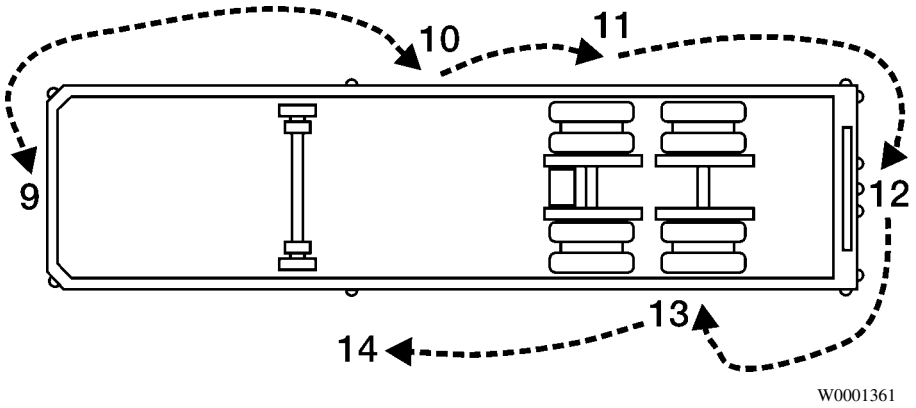

NOTE! Refer to the trailer manufacturer's manual for specific information on the trailer checks.

Step 9: Trailer Front Area

Air and Electrical Connections

- Glad hands properly mounted, free from damage and not leaking.
- Trailer cord receptacle properly mounted, free of damage; plug properly seated and safety catch engaged to prevent accidental disconnect.
- Air and electrical lines properly secured against tangling, snagging and chafing with sufficient slack for turns.

Step 10: Right Side of Trailer Area

Landing Gear or Dolly Area

- Fully raised; no missing or damaged parts.
- Crank handle present and secured.
- If power operated, no air/hydraulic leaks.

Spare Wheel(s)

- Carrier or rack not damaged.
- Spare wheel securely mounted in rack.
- Tire and wheel condition adequate for a spare: proper size, properly inflated.

Lights and Reflectors

- Trailer side clearance lights: clean, operating and proper color.
- Reflectors clean and proper color.

Frame and Body

- Frame and crossmembers not bent, cracked, damaged or missing.
- Proper placarding.
- Body parts not damaged or missing.

https://truckmanualshub.com/

Step 11: Right Rear Trailer Wheel

Dual Wheels, One Or Two Axles

- Check condition of wheels and rims. Especially look for cracks, missing lockrings, bent or broken spacers, studs, clamps or lugs.
- Check condition of tires: properly inflated, no serious cuts, bulges, tread wear or any signs of misalignment; valve stems not touching wheels, rims or brake drums; valve caps in place and no objects stuck between the wheels.
- Check that both tires are of same type, for example, not mixed radial and bias type and that their circumferences are matched.
- Check wheel bearing and hub: no obvious leaking on outside or inside wheel.

Suspension

- Condition of springs (leaf or air), spring hangers, shackles and U-bolts.
- Axle alignment.
- Condition of torque rod arms.
- If equipped with sliding axles, check position and alignment. Look for damaged, worn or missing parts, all locks present, fully in place and locked.
- Flexible air tubing not cracked, cut, crimped or otherwise damaged. Secured against tangling, dragging and chafing.

Brakes

- Condition of brake drums. With brakes released, look for a noticeable gap between lining and drum (This check cannot be made if dust covers are in place).
- Condition of brake hoses: check for any chafing.
- Check brake chamber mounting bolts and brackets.
- Check slack adjusters and chamber push rod travel. With brakes applied or released, look for conspicuously different positions of the slack adjusters.
- Check spring brakes.

Step 12: Rear of Trailer Area

Lights and Reflectors

- Rear clearance, identification and tail lights clean, operating and proper color.
- Reflectors clean and proper color.

Cargo Securement

- Cargo properly blocked, braced, tied, chained, etc.
- Tailboard up and properly secured. End gates free from damage, properly secured in stake pockets.
- Canvas or tarp (if required) properly latched down to prevent water damage, tearing, billowing or blockage of either mirrors or tail lights.
- Rear doors securely closed, latched or locked; required security seals in place.
- Underside guard in place: not cracked, bent or broken.

https://truckmanualshub.com/

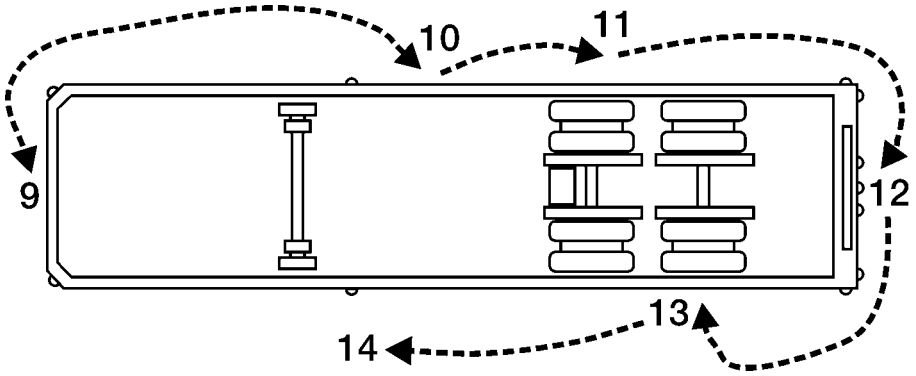

W0001361

NOTE! Refer to the trailer manufacturer's manual for specific information on the trailer checks.

Step 13: Left Rear Trailer Wheels Area

Dual Wheels, One Or Two Axles

- Check condition of wheels and rims. Especially look for cracks, lockrings missing, bent or broken spacers, studs, clamps or lugs.
- Check condition of tires: properly inflated, no serious cuts, bulges, tread wear or any signs of misalignment; valve stems not touching wheels, rims or brake drums; valve caps in place and no objects stuck between the wheels.
- Check that both tires are of same type, for example, not mixed radial and bias type and that their circumferences are matched.
- Check wheel bearing and hub: no obvious leaking on outside or inside wheel.

Suspension

- Condition of springs (leaf or air), spring hangers, shackles and U-bolts.
- Axle alignment.
- Condition of torque rod arms.
- If equipped with sliding axles, check position and alignment. Look for damaged, worn or missing parts, all locks present, fully in place and locked.
- Flexible air tubing not cracked, cut, crimped or otherwise damaged. It should be secured against tangling, dragging and chafing.

Brakes

- Condition of brake drums. With brakes released, look for a noticeable gap between lining and drum (This check can not be made if dust covers are in place).
- Condition of brake hoses: check for any chafing.
- Check brake chamber mounting bolts and brackets.
- Check slack adjusters and chamber push rod travel. With brakes applied or released, look for conspicuously different positions of the slack adjusters.
- Check spring brakes.

https://truckmanualshub.com/

Step 14: Left Side of Trailer Area

Landing Gear or Dolly Area

- Fully raised; no missing or damaged parts.
- Crank handle present and secured.
- If power operated, no air/hydraulic leaks.

Spare Wheel(s)

- Spare wheel securely mounted in rack with no damage to rack.
- Tire and wheel condition adequate for a spare: proper size, properly inflated.

Lights and Reflectors

- Trailer side clearance lights: clean, operating and proper color.
- Reflectors clean and proper color.

Frame and Body

- Frame and crossmembers not bent, cracked, damaged or missing.
- Proper placarding.
- Body parts not damaged or missing.

Before Leaving the Parking Area

- Remove chocks from the wheels.
- Test trailer hook-up by slowly pulling while applying the trailer brakes with the trailer brake hand control valve.
- Test the service brakes before leaving the parking area.
- Test parking brakes by stopping on a 20% grade and applying the parking brakes. The parking brakes shall hold the combined vehicle and trailer without moving.

https://truckmanualshub.com/

Daily Maintenance

The following should be checked daily in addition to doing the pre-trip inspection of the truck or tractor and trailer.

While checking the fluid levels, visually inspect hoses, pipes and their connections for signs of leakage. Inspect the ground under engine, transmission and rear axle(s) for signs of leakage.

Check coolant level in the coolant tank. The level should be above the minimum mark shown on the side of the tank.

WARNING

Do not remove the cap to the surge tank while the engine and radiator are still hot and under pressure. Scalding fluid and/or steam may be blown out under pressure if the cap is taken off too soon.

If the coolant level is low, add more coolant to the tank so the level is above the minimum mark. Coolant should be filled through the cap in the middle of the tank.

CAUTION

To prevent cooling system damage, add only pre-mixed coolant made up of 50% clean water and 50% antifreeze. See the "*Operator's Manual, Maintenance & Engine*" for more detailed information.

DANGER

Before working on or inspecting a vehicle, set the parking brakes, place the transmission in neutral and block the wheels . Failure to do so can result in unexpected vehicle movement and can cause serious personal injury or death.

W2002049

https://truckmanualshub.com/

WARNING

Keep yourself clear of all moving or hot engine parts. A hot engine can cause serious burns.

Check oil level in the engine with the dipstick. The oil level should be between the minimum and maximum marks on the dipstick.

CAUTION

Do not overfill or underfill oil. Premature wear or component damage may result if you do.

See the "*Operator's Manual, Maintenance and Engine*" for correct types of oil used in Volvo engines.

CAUTION

If the vehicle is equipped with an aerodynamic bumper, do not step on or press in between the bumper and the wheel. Breakage or damage may result.

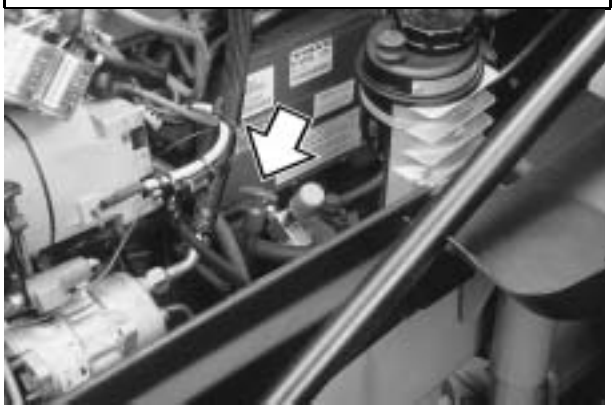

W2002047

To add oil to the engine, remove oil cap on the valve cover and fill through the hole.

CAUTION

Make sure the oil added is the same type of oil that is in the engine. The wrong type of oil could accelerate wear on engine if not suited for application.

W2002048

https://truckmanualshub.com/

Check fluid level in the clutch fluid reservoir. Fluid level should be between the level marks on the reservoir.

If fluid needs to be added, use brake fluid, DOT 4.

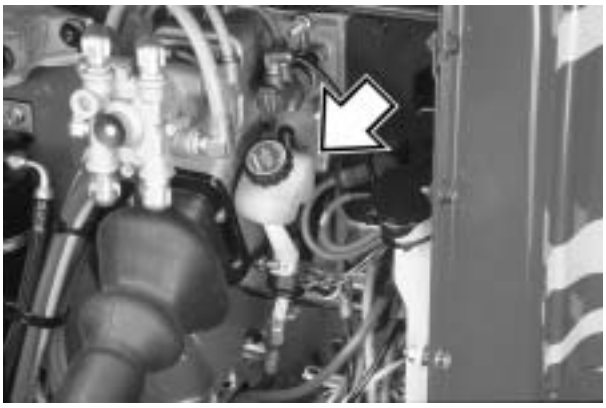

W4000726

Check level in the windshield washer reservoir. If washer fluid needs to be added, use a commercially reputable washer fluid that has good cleaning capability and does not freeze in cold weather.

Total reservoir capacity is 3.3 gallons (12.5 liters). An indicator will appear on the diagnostic display when there is approximately 1.4 gallons (5.3 liters) remaining in the reservoir.

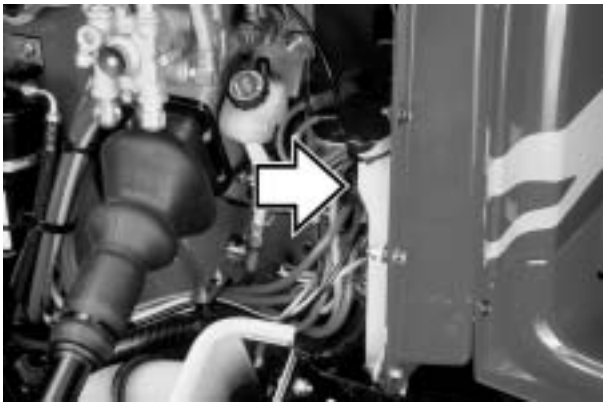

W8000985

Check that windshield wipers and washer are working properly.

The windshield washer spray should cover the windshield well. The wipers should clean the windshield in a couple of strokes and should not leave any streaks.

W3000874

https://truckmanualshub.com/

If the windshield needs an overall cleaning, use a long handled cleaning sponge and squeegee.

Clean the side windows in the same way with a long handled sponge and squeegee.

W1000070

Check all lights for proper function:

- Headlights
- Daytime running lights
- Parking and marker lights
- Stoplights
- Turn signals

W3000953

NOTE! Make sure that all fluid levels are at their proper levels. If the fluids are not at their proper levels, add as necessary. Refer to the Engine and Maintenance Manual for information on what types of fluids are recommended for your Volvo vehicle.

https://truckmanualshub.com/

WARNING

When draining the air tanks, do not look into the area of the draining air. Dirt or sludge particles may be in the air stream that could cause eye injury.

Empty out the air tanks daily. With the air system fully charged and with the engine shut off, listen for air leaks.

W5000601

https://truckmanualshub.com/

Safety Belts

General

DANGER

Safety belts must be properly worn at all times by the driver and all passengers while the vehicle is in motion even if the vehicle is equipped with a Supplemental Restraint System (SRS or air bag). Failure to do so can result in serious personal injury or death in the event of a sudden stop or collision.

DANGER

Fasten the safety belt before starting to drive. Trying to fasten the safety belt while the vehicle is moving may lead to an accident, causing serious personal injury or death.

Safety belt assemblies installed in this vehicle meet FMVSS 209, “Type 1” and “Type 2” requirements. They are recommended for all persons weighing over 50 lb (25 kg).

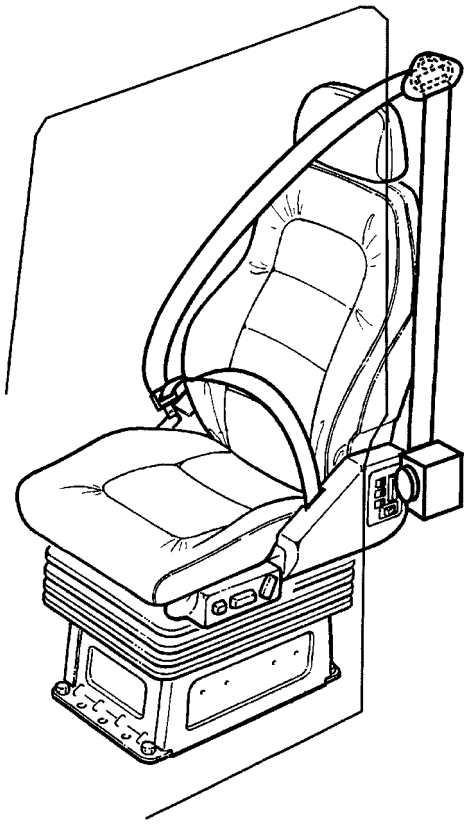

W8001834

A child restraint system should also be provided for each child weighing 50 lb (25 kg) or less. It should meet the requirements of FMVSS 213, “Child Restraint System.” Carefully read and follow all manufacturer’s instructions on installation and use. Make certain the child remains in the restraint system at all times while the vehicle is in motion.

W8002741

https://truckmanualshub.com/

Safety belts must be worn by the driver and all passengers at all times. Before adjusting or fastening the safety belt, move the seat forward or rearward and adjust the seat height as necessary. Sit erect and adjust the seat cushion and seat back for a comfortable driving position. In the event of a collision, a correct driving position maximizes the effectiveness of the safety belt.

There are both Federal and State laws governing the use of safety belts. As laws differ from state to state, make yourself familiar with the current rules.

W8001077

Tether straps are installed on all suspension-type seats. Tether straps help secure the seat to the floor and are intended to restrain the seat and safety belt in case of an accident or sudden stop.

The tethers are not adjustable and do not need any adjustment.

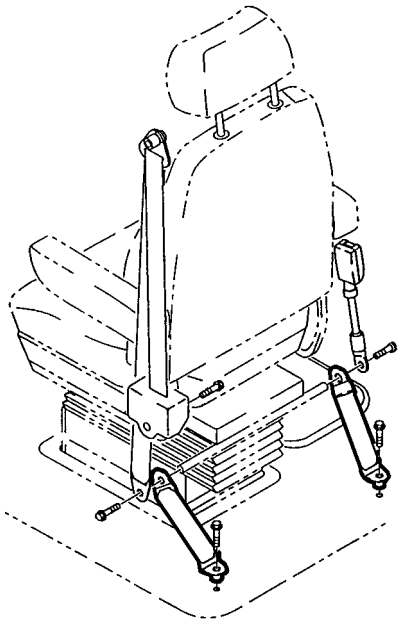

W8001387

https://truckmanualshub.com/

Operating the Safety Belt

To fasten the safety belt, pull the belt out from the retractor and insert the latch into the buckle. Verify proper lock of the latch by pulling on the latch.

W8001835

Adjust the slack by pulling on the top part of the belt until the lower part, or the part that crosses the lap, is snugly adjusted. Release the top part and let the retractor pull the belt in.

The lap portion of the safety belt should be worn low across the pelvic region (hip bone) and adjusted snugly. Never adjust the lap belt across the abdomen. A push button on the buckle is used to release the safety belt latch by pushing in the button release on the buckle.

The buckle portion of the safety belt system is different depending on the seat option chosen. The National standard and comfort seat has a separate buckle that is attached to a floor anchor by a seat strap. This seat strap is not adjustable, and does not need to be adjusted.

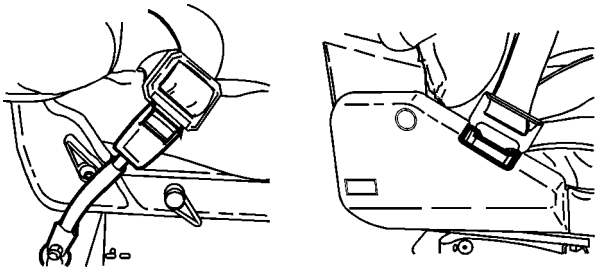

W8001836

The buckle for the seat is bolted to the seat floor.

If a comfort clip is used on the safety belt, always adjust the latch so that there is a maximum of 1 in. (25 mm) slack between the belt and chest (about the width of two fingers). If a larger slack is allowed, the effectiveness of the safety belt is decreased in the event of a collision. Operation of the clip is described on page 60.

W8001837

Make sure the safety belt is completely retracted and out of the way when not in use.

https://truckmanualshub.com/

Sleeper Safety Restraint

DANGER

Always use the safety restraint when the vehicle is in motion. Failure to do so not only may cause severe injuries or death to the passenger in the event of an accident but also poses a danger of injuries to other occupants of the vehicle.

DANGER

Anytime the vehicle is in motion, a passenger using the sleeper bunk should be strapped in using the safety restraint. The top bunk should always be used with the harness in place, whether the vehicle is in motion or not. Falling from the upper bunk can result in severe personal injury or death.

W8000895

The restraint netting can be used for securing loose articles. Any loose articles that can shift in the cab during hard cornering or braking should be kept restrained.

Fasten the restraint by connecting the buckle with the latch. Make sure the belts are not twisted. Test the latch connection by pulling on the belt. If they come apart, reconnect and test again. If the connection can not be made, replace the belt before using the bunk for sleeping during driving.

To loosen the restraint, press the red release button on the latch (1). Restraints should be properly stored when not used. Having the restraint laying loose in the cab can be a source for unintentional snagging.

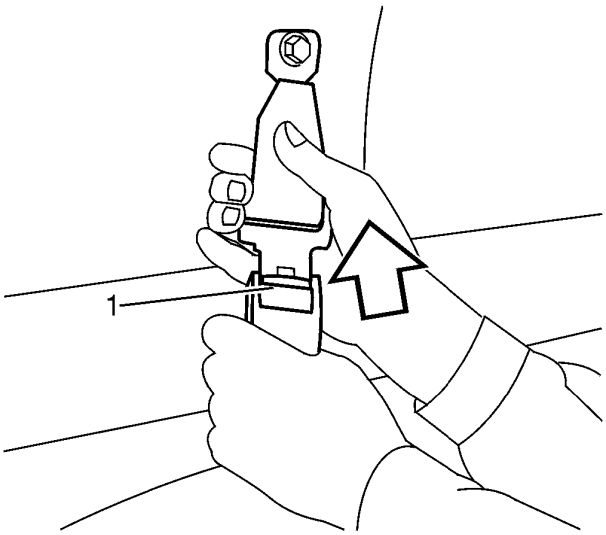

W8002475

https://truckmanualshub.com/

Safety Restraint — VN-420, VN–610 and VN–660

The restraint has latches in one end and buckles in the other so it can only be installed one way. Connect the restraint to the back wall and the buckles on the floor. Connect the side tethers and adjust the straps to form a “tent” over the bunk (VN-660 upper bunk does not have the “tenting” feature).

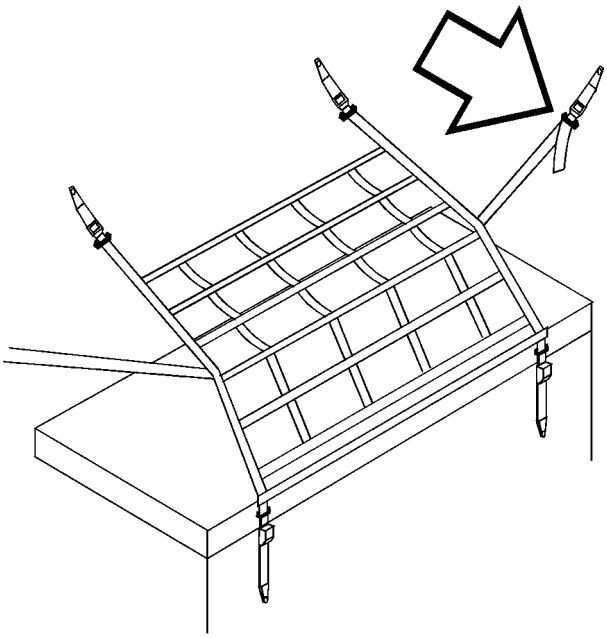

W8002039

Safety Restraint — VN-770

Connect the restraint to the back wall first. The wall connectors are located in the storage units. Connect the lower part of the restraint to the lower buckles. Connect the side tethers and adjust the straps to form a “tent” over the bunk.

NOTE! The restraints for top and bottom bunks are different. Each belt can only be installed to the correct bunk.

https://truckmanualshub.com/

Inspection

DANGER

Failure to properly inspect and maintain the safety belts can cause serious personal injury or death.

DANGER

It is critical that any time a vehicle has been involved in an accident, the entire safety belt system must be replaced in the vehicle (which also includes the sleeper bunk restraints) if they were in use at the time of the accident. Failure to replace the safety belt system may result in serious injury or death.

DANGER

A damaged safety belt, whether visibly damaged or not, could result in serious personal injury in the event of an accident. The safety belt systems should be replaced at least every five years.

DANGER

Do not bleach or re-dye the color webbing because it may cause a severe loss of belt strength. This loss of strength could allow the safety belt to break under stress, thus resulting in severe personal injury or death.

Check the belts, buckles, latch plates, retractors, anchorages, and guide loops to ensure that they are working properly. Look for loose/damaged parts (without disassembling) that could keep the restraint system from working properly. If the safety belt, retractor and hardware were in use during a collision, they must be replaced. The restraint system anchorage fasteners must be replaced if necessary. If there is any doubt about the restraint system's effectiveness, replace the entire safety belt assembly.

https://truckmanualshub.com/

The following maintenance guidelines detail how to inspect safety belts and tethers for cuts, fraying, extreme or unusual wear of the webbing, etc., and damage to the buckle, retractor, hardware or other factors which indicate that safety belt system replacement is necessary.

Check the web wear at the buckle/latch area. The webbing must be closely examined to determine if there are any cuts, fraying or extreme wear in the webbing. Cuts, fraying or excessive wear would indicate the need for replacement of the safety belt system.

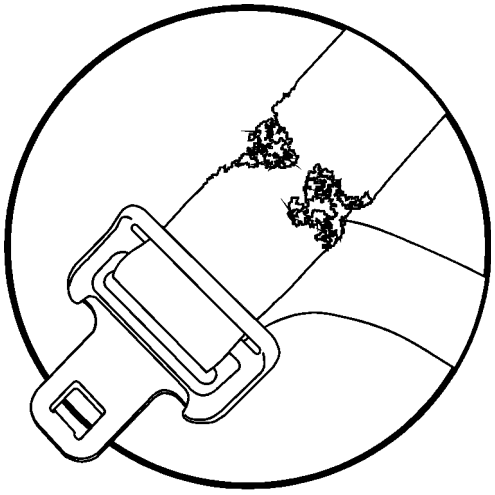

W8001406

The D-loop web guide is an area where almost constant movement of the safety belt webbing occurs because of the relative movement between the seat and the cab. This constant movement forms an area where wear will often occur. The webbing must be closely examined to determine if there are any cuts, fraying or extreme wear in the webbing. Cuts, fraying or excessive wear would indicate the need for replacement of the safety belt system.

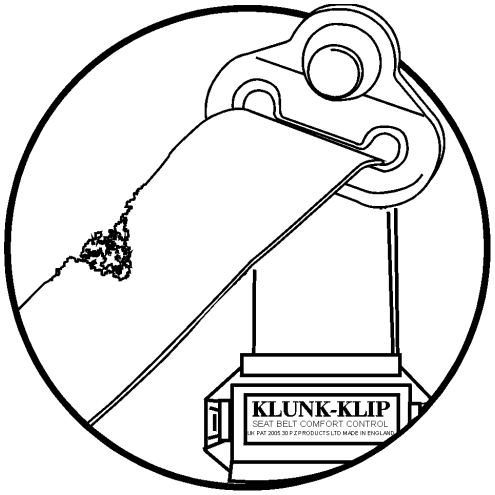

W8002478

https://truckmanualshub.com/

Check to make sure that the D-loop web guide is rotating properly. If the guide is not rotating properly, the webbing will pull at the wrong angle through the guide, accelerating wear.

W8002477

If equipped, check the comfort clip for cracks or possible damage. Make sure that it works properly.

Check the buckle by inserting the latch and verifying proper operation. Determine if the latch plate is worn or deformed. Check the buckle and latch casing for cracks or breakage.

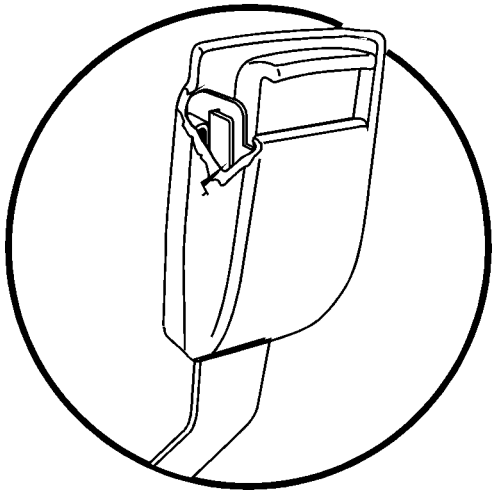

W8001404

https://truckmanualshub.com/

The retractor web storage device is mounted on the B-pillar, just behind the door in the cab. The retractor is the heart of the safety belt system and can be damaged if abused, even unintentionally. Check the retractor web storage device operation to ensure that it is not locked and that it spools out and retracts the webbing properly.

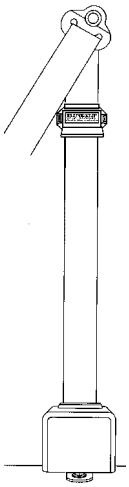

W8002481

If tethers are being used to anchor the safety belts to the floor, make sure that they are properly attached to the seat. Tethers must also be inspected for web wear and proper tightness of mounting hardware.

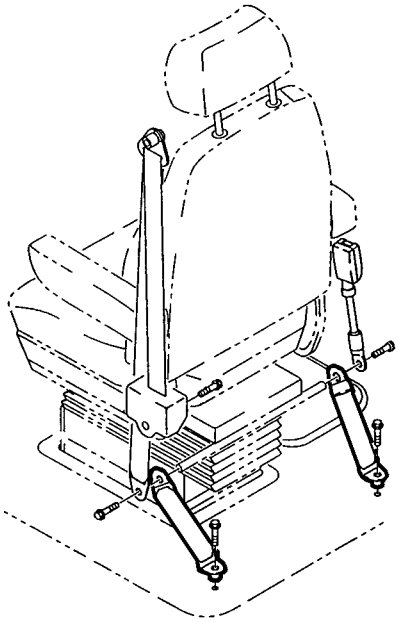

W8001387

All hardware for safety belt mounting points should be evaluated for corrosion. All attachment points of the system should be checked for tightness of mounting hardware.

Check the web in areas exposed to ultra-violet rays from the sun or extreme dust or dirt. If the original color of the web in these areas is extremely faded, the physical strength of this web may have deteriorated. If this condition exists, replace the safety belt system.

https://truckmanualshub.com/

Important Facts About Safety Belts in Heavy Trucks

The high mileage associated with heavy trucks, the continual relative movement of the seat with the cab, the possible contact with the vehicle seat or other parts of the cab structure, and the potential exposure of this safety belt to severe environmental conditions make it crucial to inspect the seat belt system regularly. It is recommended that the system be inspected every 15,000 miles (24,000 km) or more often if the vehicle is exposed to severe environmental or vocational conditions. Any safety belt system that shows cuts, fraying, extreme or unusual wear, significant discolorations due to ultra-violet ray exposure, dusty-dirty conditions, abrasion to the safety belt webbing or damage to the buckle, latch plate, retractor, hardware or any other obvious problem should be replaced immediately, regardless of the mileage.

Once replacement of the safety belt has been determined necessary, be certain that it is replaced only with a Volvo original replacement safety belt. See your authorized Volvo Truck dealer for replacement. Your Volvo safety belt system has been developed and tested specifically for heavy trucks. Replace it only with the exact same design that the vehicle was equipped with.

If the inspection indicates that any other part of the safety belt system requires replacement, the entire belt system must be replaced. An installation guide is attached to every replacement system, entitled “Three-Point Safety Belt Installation Guide.” There are separate safety belt instruction guides for suspension and stationary seats. Use the proper guide for your type of seat and follow the instructions very closely. It is vitally important that all components are mounted back in the same positions as the original components that were removed. This will maintain the design integrity of the mounting points for the safety belt assembly.

https://truckmanualshub.com/

Comfort Clip Operation

When provided, the comfort clip is located on the shoulder strap just below the D-ring.

When adjusting the comfort clip, the following procedure must be followed for proper adjustment:

1 Pull out only enough webbing to allow slight pressure to the shoulder and chest. Allow no more than a 1 in. (25 mm) slack when measured between the chest and the belt.

2 To activate the clip mechanism feature, lift the lever up to clamp the webbing in place.

NOTE! When the safety belt is not in use, the clip should be in the open position to allow the seat belt to retract to its proper position. Also make sure that the adjustment of the comfort clip does not interfere with the operation of the safety belt.

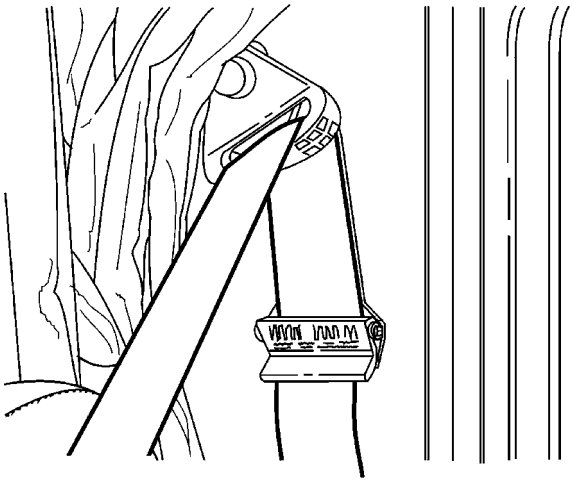

W8002388

Open position

Always adjust the clip so that there is a maximum of 1 in. (25 mm) of slack between the belt and chest (about two fingers width). If a larger slack is allowed, the effectiveness of the safety belt is decreased in the event of a collision.

W8001837

https://truckmanualshub.com/

SRS Airbag

WARNING

The SRS airbag is intended to supplement — not replace — the standard safety belt. The airbag is not deployed when the truck is hit from behind, from the side or if it rolls over. For best protection, sit in a normal, upright position. **Always wear the safety belt**.

For added safety, the vehicle may be equipped with an airbag or SRS (Supplemental Restraint System) as a supplement to the standard three-point anchored safety belt. The SRS is designed to reduce the risk of injury to the driver's face and upper part of the body. Together with the safety belt, the airbag helps prevent the driver from being thrown against the steering wheel, windshield or other hard surfaces in the cab.

The Volvo SRS Airbag provides increased protection in frontal collisions, where the vehicle collides with a fixed or heavy object with enough force to activate the sensors which then activates the airbag. Damage to the vehicle is not always proportional to whether the SRS Airbag deploys or not.

The SRS Airbag is **not** designed to be activated with:

- Collision from the sides
- Collision from the rear
- Rolling over
- Head-on collisions at low speed or against soft objects such as bushes, snow drifts, etc.

https://truckmanualshub.com/

SRS System

The inflatable airbag is folded into the center of the steering wheel. It inflates in the event of a serious collision above a certain level, where the angle of impact, crash severity, speed and nature of the object involved in the collision all play a part in whether or not the airbag is activated.

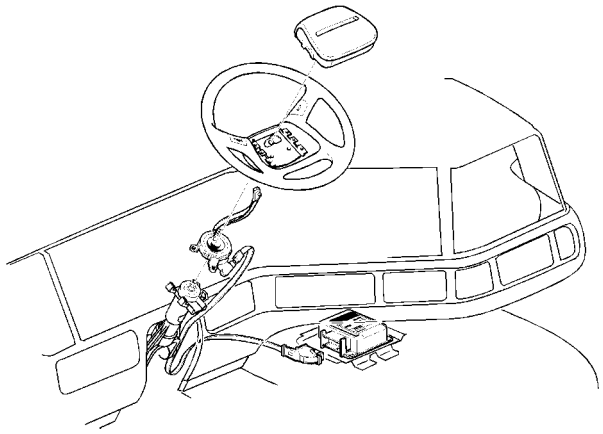

T8006849

The system consists of a gas generator surrounded by the inflatable airbag. In the event of a sufficiently violent collision, a control unit activates the gas generator ignitor and the airbag inflates. To cushion the impact, the airbag deflates when compressed. This also releases some non-toxic smoke into the cab. The entire sequence, from inflation to deflation of the airbag, takes a few tenths of a second.

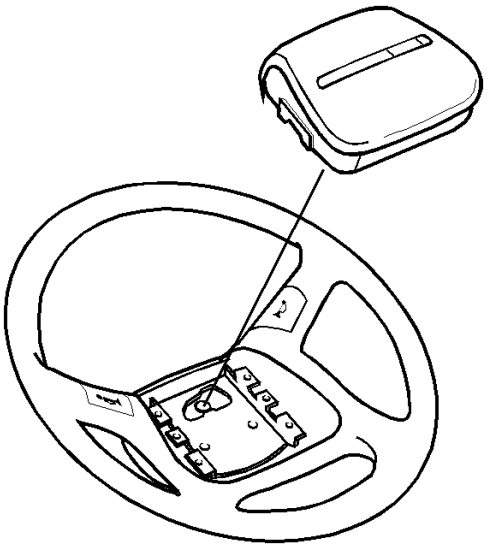

T8006855

WARNING

Never attempt to drive with a deployed airbag. With the bag hanging out of the hub of the steering wheel, the truck may be more difficult to steer. In addition, other safety systems may be damaged. Continuous exposure to the smoke and dust created during the deployment of the airbag can cause irritation to the skin and eyes.

https://truckmanualshub.com/

The SRS system is continually monitored by the control unit. A control unit is mounted on a bracket above the engine cover which detects deceleration. The control unit also contains a standby power unit which can supply the system with power for a short time, should the normal supply be broken.

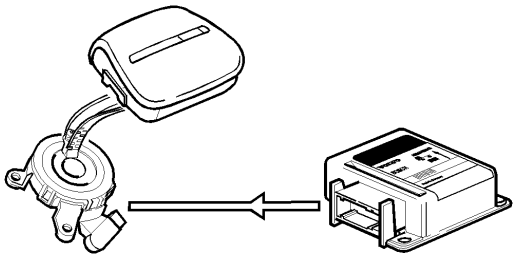
T8006857

If the control unit detects a sufficiently violent deceleration (collision), the system is activated. The gas generator triggers and fills the bag with a non-toxic gas within a few hundredths of a second. During a collision, after the bag has been filled, gas flows out through two holes in the weave. These holes are large enough to let the airbag collapse slowly, gently catching the driver.

In the event of a problem in the SRS system, a telltale shows on the graphic display in the instrument cluster. This telltale, together with other telltales in the cluster, also light up when the engine is started. The telltale should go out after approximately 10 seconds when the starting key has been turned to the drive position.

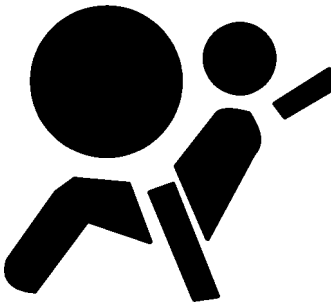
W3000982

If a problem develops in the system, the ⚠INFO telltale will come on together with the SRS telltale.

CAUTION

The vehicle should be taken to an authorized Volvo Truck dealer immediately if the SRS telltale stays on or lights up when the vehicle is being driven.

https://truckmanualshub.com/

Warning Labels

The label attached to the left hand sunvisor shows the year and month when a Volvo Truck dealer should be contacted for a specific inspection and for a possible replacement of the airbag. This is done to guarantee the function of the airbag after the stated date. Replace the label when replacing the airbag module. Never attempt to make any adjustments to SRS components yourself.

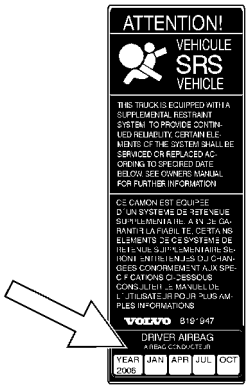

T8006843

Steering shafts and steering wheel should not be removed, adjusted or replaced without following the proper work procedure. Failure to do so can damage the SRS system to the point where it does not work any longer. A warning label is located on the upper steering shaft.

T8006842

There is also a label on the inside of the windshield that indicates the inclusion of an airbag to the vehicle safety features.

T8006841

When equipped with an airbag, a label about the correct procedure for protecting small children and protecting the driver is attached to the left hand, overhead storage lid or back of sunvisor.

W8002741

https://truckmanualshub.com/

Any queries concerning the SRS system should be directed to a Volvo Truck dealer. There is no maintenance required for the SRS system until the date stated on the warning label located on the left hand sun-visor.

DANGER

Never attempt to repair any part of the SRS system. Any interference with the system may cause it to malfunction and result in serious injury or death. Work on the system may only be carried out by an authorized Volvo Truck dealer.

To allow the SRS system to work as designed:

- Never drive an SRS system equipped vehicle with the hands on the steering wheel pad/airbag module.
- No objects, accessory equipment or stickers may be placed on, attached to or installed near the SRS cover in the center of the steering wheel.

https://truckmanualshub.com/

General Information

When is the airbag deployed?

The airbag is only deployed during a **head-on collision**, where the vehicle hits a fixed or heavy object with sufficient force. The SRS system registers both the force of the collision and the internal forces caused by the collision. The control unit determines if the collision is sufficiently violent for the airbag to be deployed.

NOTE! The SRS system is only activated once in a collision. If the airbag has deployed, the following is recommended:

- Have the vehicle towed to a Volvo Truck dealer. Even if the vehicle can be driven after a collision, **it is not recommended to drive the truck with the airbag deployed.**
- Have an authorized Volvo Truck dealer change the components in the SRS system.
- Only use original Volvo parts when replacing the SRS system components (airbag, safety belt, etc.).

When is the airbag not deployed?

Not all frontal collisions activate the SRS system. In a collision with a soft object (a snow drift or bush for example, or a hard or fixed object at low speed), there is no need for the SRS system to be activated. The airbag is usually not inflated in response to side-on collisions, impacts from the rear or if the vehicle overturns. The extent of damage to the vehicle is no measure of how well the SRS system works.

https://truckmanualshub.com/

Can the airbag be deployed accidentally?

The complete SRS system is constructed so that the airbag only inflates in particular collision conditions. The SRS system has its own diagnostic unit which continuously monitors the functioning of the system. Make a habit of checking the SRS system telltale light when starting and driving the vehicle.

Heart of the Volvo safety system

The **three-point anchored safety belt** is the heart of the Volvo safety system. The belt should be worn **at all times**. The SRS system is intended as a supplement to the three-point anchored safety belt.

https://truckmanualshub.com/

Safety Equipment

Safety triangles and fire extinguishers are available as optional equipment. The fire extinguisher should be located by the base of the driver seat, between the seat and the door. Depending on the cab style, the safety triangles are located in different places in the cab.

W1000071

Day Cab

The warning triangles are stored in a box that is strapped to the back wall.

W0001372

Sleeper Cab

The warning triangles are stored in a box that is strapped to the inner wall of the right side luggage compartment.

W1000139

https://truckmanualshub.com/

VORAD Collision Warning System

The Eaton VORAD computerized Collision Warning System constantly monitor vehicles ahead with a front end mounted radar and in a blind spot area with an optional side mounted radar. The Collision Warning System warns the driver of potentially dangerous situations by activating visual and audible alerts.

DANGER

The Eaton VORAD Collision Warning System is intended solely as an aid for an alert and conscientious professional driver. It is not to be used or relied upon to operate the vehicle. Use this system together with rear view mirrors and other instrumentation to maintain safe operation of the vehicle. Operate a VORAD equipped vehicle in the same safe manner as if VORAD was not installed.
The Eaton VORAD Collision Warning System is not a substitute for safe driving procedures nor will it compensate for any driver impairment, such as drugs, alcohol or fatigue.
The Eaton VORAD Collision Warning System may provide little or no warning for some hazards like: alerts for pedestrians, animals, oncoming vehicles and cross traffic. SmartCruise will not react to stationary objects and it does not have the capability to stop the vehicle.
Failure to follow these instructions may lead to a crash resulting in severe personal injury or death.

If your vehicle is equipped with the Eaton VORAD Collision Warning System, read the manufacturer's Driver Reference Manual before taking the vehicle on the road.

https://truckmanualshub.com/

Dash Overview

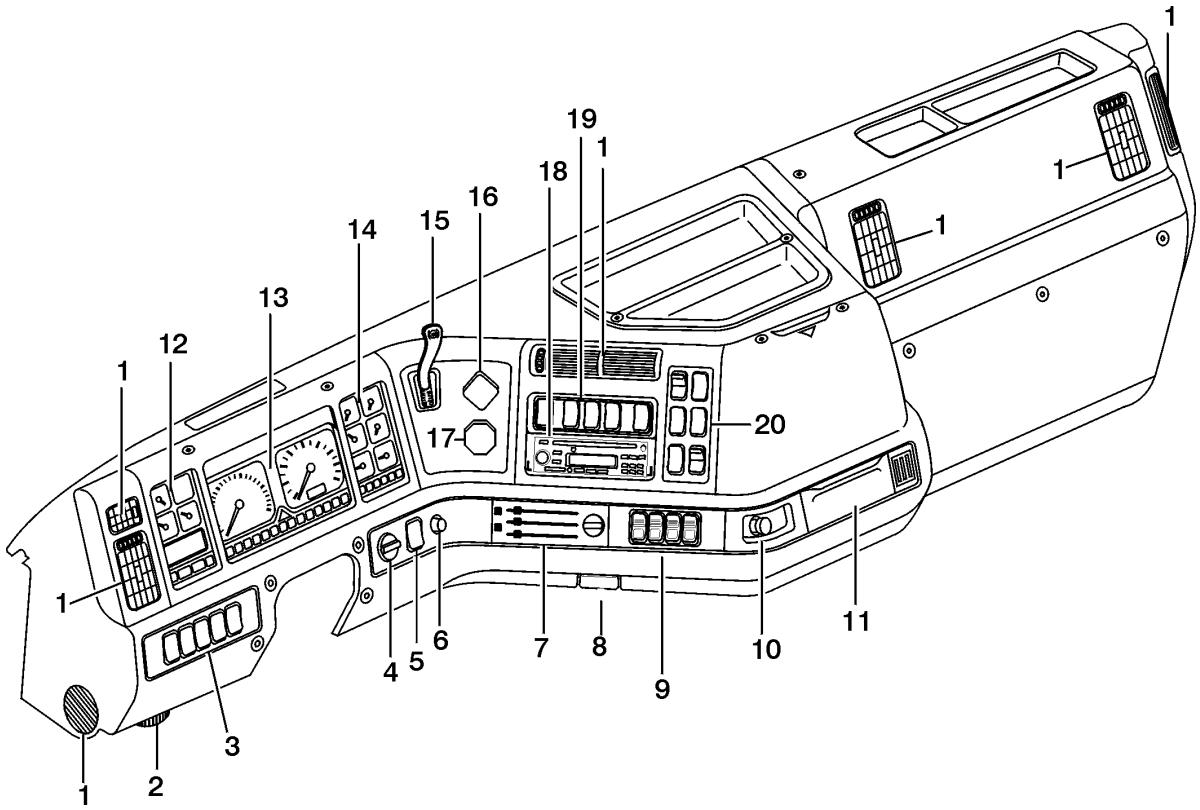

1 Air Vents (page 182)
2 Diagnostic Test Connection
3 Left Switch Cluster (page 99)
4 Headlight Switch (page 104)
5 Driving/Fog Lights - option (page 105)
6 Instrument Light Dimmer (page 113)
7 Climate Unit Control Panel (page 174)
8 Hood Latch Handle (page 30)
9 Pneumatic Switches (page 110)
10 Cigar Lighter (page 113)
11 Ashtray
12 Instrument Cluster, Left (page 74)
13 Instrument Cluster, Main (page 82)
14 Instrument Cluster, Right (page 89)
15 Trailer Hand Brake Control (page 283)
16 Tractor Parking Brake (page 278)
17 Trailer Air Supply (page 278)
18 Radio - option (page 233)
19 Optional Switches (page 112)
20 Right Switch Cluster (page 106)

Operating

Before driving this vehicle, locate the instruments and controls, and become thoroughly familiar with their operation. After starting and when driving, always check that the instrument readings are normal.

NOTE! Availability of gauges depends on chosen options. All gauges and telltales may not be used in all vehicles.

https://truckmanualshub.com/

Instrument Cluster Overview

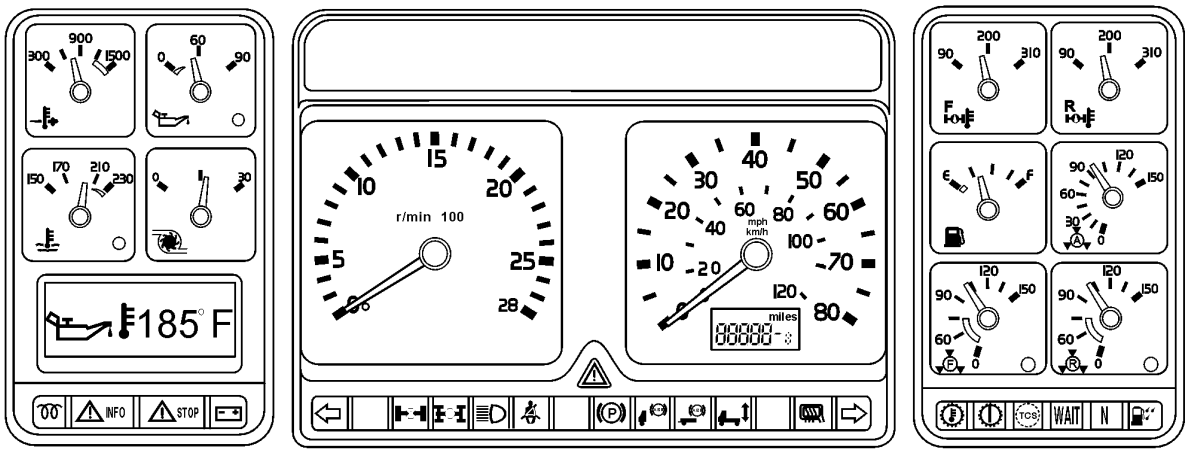

W3004396

General

The cluster is available in seven different configurations, with the speedometer either graded in mph or km/h. The cluster consists of three combined sections:

Left Section

The left section can include pyrometer, engine oil pressure gauge, engine coolant temperature gauge, turbo boost pressure gauge and a graphic display for driver information. See page 74 for gauge information and page 114 for graphic display information. There are telltales in the lower part. Please refer to page 77 for telltale information.

Center Section

The center section contains tachometer, speedometer and odometer. See page 82 for gauge information. In the lower part there is a central warning lamp and telltales for different vehicle functions. Please refer to page 85 for telltale information.

Right Section

The right section can include forward and rear axle temperature gauges, fuel level gauge, application air pressure gauge, front and rear brake air pressure gauges. Vehicles with rear air suspension may have an air suspension pressure gauge. See page 89 for gauge information. There are telltales in the lower part. Please refer to page 92 for telltale information.

https://truckmanualshub.com/

Telltale Overview

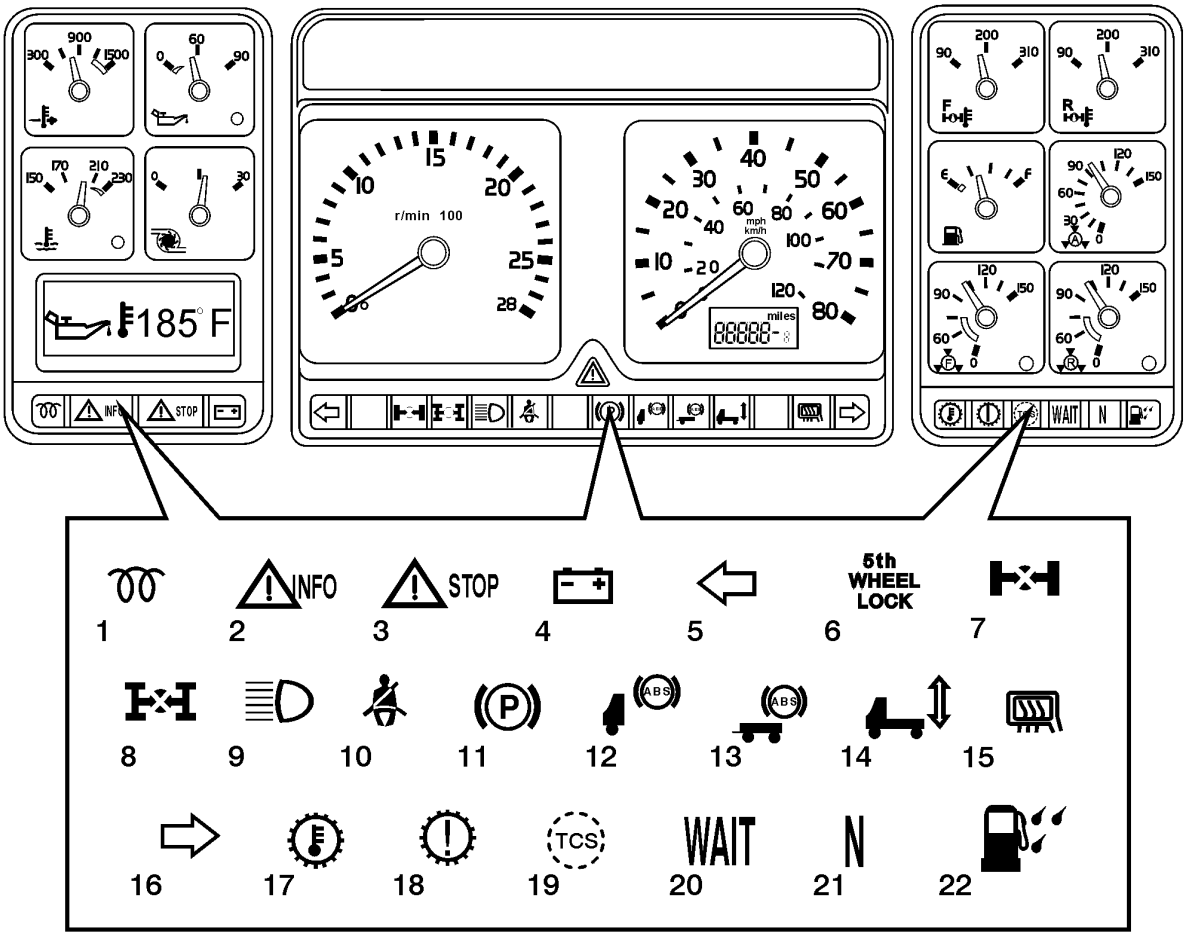

W3004406

1 Engine Preheat (page 78)
2 Yellow ⚠INFO Light (page 79)
3 Red ⚠STOP Light (page 80)
4 No Charge (page 81)
5 Left Turn (page 86)
6 Fifth Wheel Lock (page 86)
7 Wheel Differential Lock (page 86)
8 Axle Differential Lock (page 86)
9 High Beam (page 87)
10 Safety Belt (page 87)
11 Parking Brakes (page 87)
12 Tractor ABS (page 88)
13 Trailer ABS (page 88)
14 Air Suspension Level (page 88)
15 Mirror Heater (page 88)
16 Right Turn (page 86)
17 Transmission Temperature (page 92)
18 Check Transmission (page 92)
19 Traction Control System (page 92)
20 Wait to Start (Not used)
21 Transmission in Neutral (page 92)
22 Water in Fuel (Not used)

https://truckmanualshub.com/

Graphic Display Telltale Overview

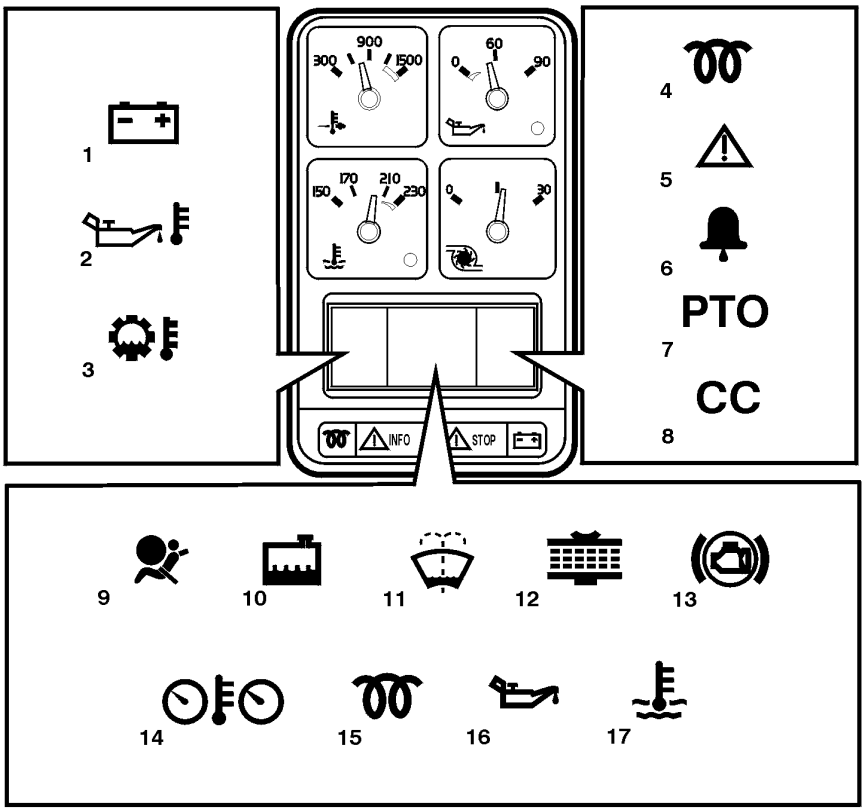

W3003534

1 Voltmeter (page 162)
2 Engine oil temperature (page 159)
3 Transmission oil temperature (page 125)
4 Preheating active (page 78)
5 Acknowledged warning (page 130)
6 Alarm clock on (page 167)
7 PTO engaged (page 101)
8 Cruise control engaged (page 265)
9 Airbag (SRS) (page 63)
10 Coolant level (page 126)
11 Washer fluid level (page 120)
12 Engine airfilter clogged (page 121)
13 Too cold for engine brake (page 289)
14 Overheating, instrument cluster (page 120)
15 Engine preheat fault (page 249)
16 Engine oil pressure (page 76)
17 Coolant temperature (page 75)

https://truckmanualshub.com/

Left Instrument Section

A Pyrometer (option) (this page)

B Engine Coolant Temperature (page 75)

C Engine Oil Pressure (page 76)

D Turbo Boost Pressure (option) (page 77)

E Graphic Display (page 114)

F Telltale Indicators (page 77)

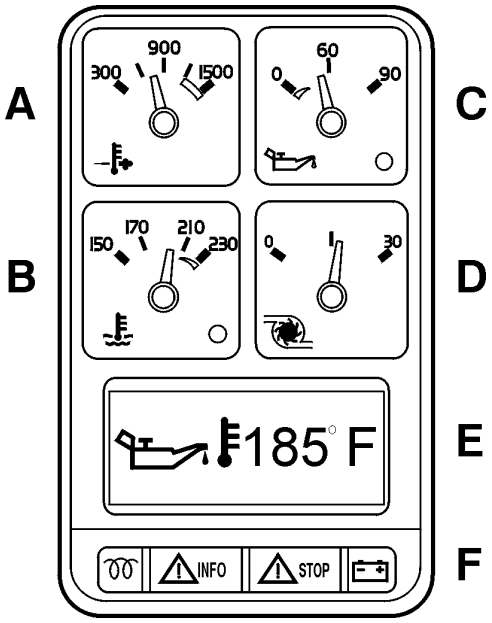

W3003644

A — Pyrometer (option)

An engine pyrometer system indicates the exhaust temperature, which helps the operator get the best efficiency from the engine.

Variations in engine load can cause the exhaust temperature to vary. For example, high exhaust gas temperature is the result of prolonged engine lugging or overfueling. If the pyrometer reading shows that exhaust temperature exceeds normal, reduce fuel to the engine until exhaust temperature is reduced. Shift to a lower gear if the engine is overloaded.

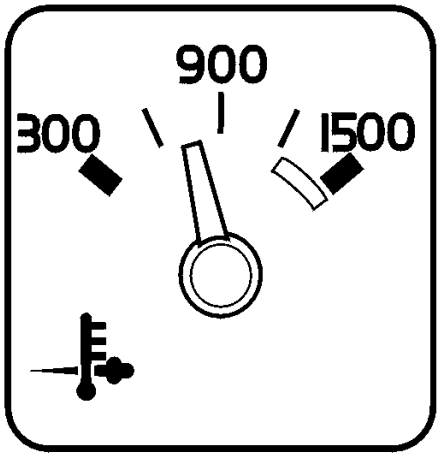

W3003632

https://truckmanualshub.com/

B — Engine Coolant Temperature

The gauge indicates engine coolant temperature. Normal operating temperature reading is 165 to 205°F (75 to 95°C) for the VOLVO engine. The temperature, under normal driving conditions, must be below the red sector. The temperature range for the coolant will vary depending on the type of engine, load, grade, ambient air temperature and operating conditions. If the temperature remains below or exceeds the normal temperature range, the cooling system should be checked for problems by your Volvo Truck dealer.

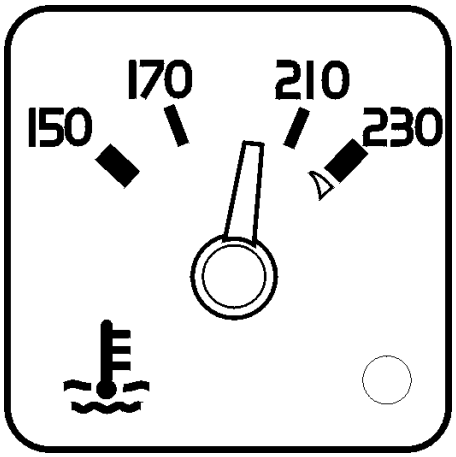

W3003769

The LED light in the lower right corner of the gauge lights up solid when coolant temperature is excessive. The temperature limit is dependent on the engine manufacturer electronic program. Together with the gauge light, the red ΔSTOP telltale will come on and the buzzer will also sound. The engine is at risk and the engine controller may react by derating the engine power. Stop at the first safe place where the problem can be checked.

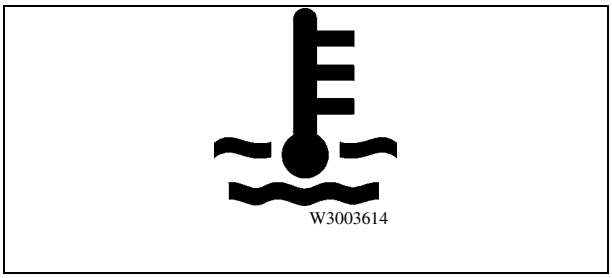
W3003614

T3008861

NOTE! If the coolant temperature returns to normal shortly after exceeding the limit and no repair has been made, the warning messages go out but there will be a fault message logged.

https://truckmanualshub.com/

C — Engine Oil Pressure

The gauge indicates oil pressure by a sensor directly connected to the engine lubrication system. Normal oil pressure is 30 to 70 psi (210 to 480 kPa) when the engine is at normal operating temperature. At idle speed, the pressure may drop to 5 to 20 psi (35 to 140 kPa). When first starting a cold engine, oil pressure may exceed 90 psi (620 kPa).

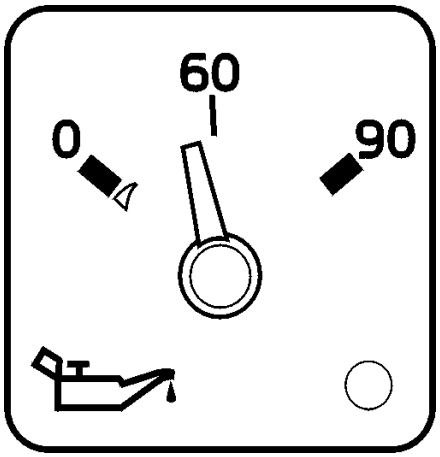

W3003768

The LED light in the lower right corner of the gauge lights up solid when the oil pressure is too low. The pressure limit is dependent on the engine manufacturer electronic program. When the gauge light comes on, the red ΔSTOP telltale starts blinking, the buzzer sounds and the oil pressure symbol appears on the graphic display. The engine is at risk and the engine controller may react by derating the engine power, for example. Bring the vehicle to a safe stop where the problem can be checked.

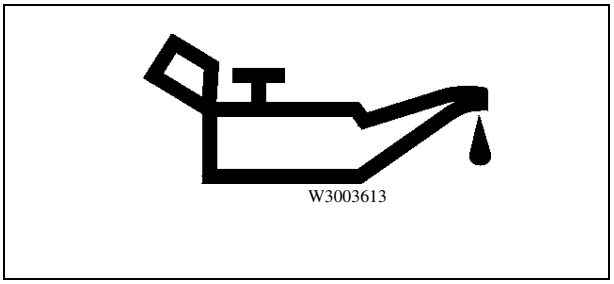

W3003613

With very low oil pressure, the red ΔSTOP telltale lights up solid. The engine will shut down within 30 seconds from when the light came on. Pull off the road as soon as possible without being a safety hazard.

T3008861

DANGER

Failure to take necessary action when the ΔSTOP telltale is on, can ultimately result in automatic engine shutdown and loss of power steering assist. Vehicle crash resulting in personal injury or death can occur.

https://truckmanualshub.com/

D — Turbo Boost Pressure (option)

The gauge indicates intake manifold pressure on the engine. The pressure is generated by the turbo. Boost pressure should be the same at a given engine temperature, speed and load. Turbo boost pressure will vary for different engines and vehicle models. By monitoring the gauge, the operator can avoid engine problems.

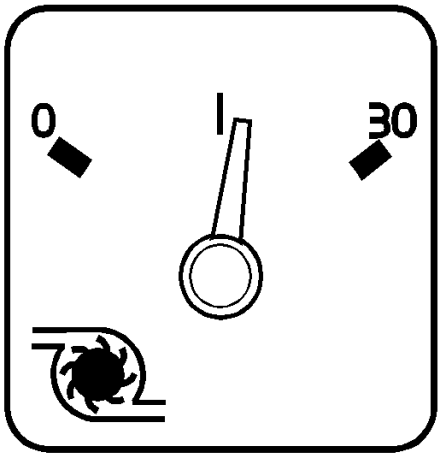

W3003631

F — Telltale Indicators, Left Section

1 Engine preheat telltale (page 78)

2 Caution telltale (page 79)

3 Stop telltale (page 80)

4 No Charge telltale (page 81)

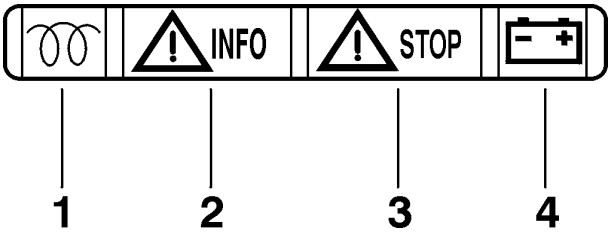

W3003645

https://truckmanualshub.com/

1 — Engine Preheat Telltale

T3008841

The amber telltale will light up when the intake manifold preheater is operating. The heater is used for better cold starts. Operation time of the heater can vary in several steps from 0 to 50 seconds depending on coolant temperature and outside air temperature. On cold mornings, the preheater will be on for the maximum 50 seconds. When the ignition key has been turned to the preheat position, the preheater coils in the intake manifold are activated to warm the intake air. Once the engine is started, the preheater may be re-engaged to assist in a quicker engine warm-up. See page 249 for information on using the preheater.

https://truckmanualshub.com/

2 — ⚠INFO Telltale

T3008860

The yellow ⚠INFO telltale lights up to indicate a control system or component malfunction. In some cases, the engine power may be derated (see page 120). When the telltale comes on, stop at the first safe place where the problem can be checked.

When ignition is switched on, the telltale goes out unless a defect is detected.

NOTE! On vehicles equipped with a Volvo engine, the telltale is on for 3 to 5 seconds after the ignition key switch is turned on.

See page 119 for a listing on related messages that trigger this telltale.

https://truckmanualshub.com/

3 — ΔSTOP Telltale

DANGER

Failure to take necessary action when the ΔSTOP telltale is on, can ultimately result in automatic engine shutdown and loss of power steering assist. Vehicle crash resulting in personal injury or death can occur.

T3008861

The ΔSTOP telltale lights up red to alert the operator that a severe problem has been detected and in some cases a preventive action may be taken by the engine electronics to protect the engine. For example: if oil pressure or coolant level drops too low, the engine will be forced to low idle and when the vehicle speed is zero, the engine shuts down. Another example is: with excessive coolant temperature, the engine will gradually reduce power output to 50%. This telltale always activates the buzzer.

The engine may be started again after the key is turned off and then back on. However, it will only operate for 30 seconds unless the problem is resolved.

CAUTION

If the problem is allowed to persist, serious damage to the engine may occur. Always repair the cause of the problem before taking the vehicle into service again.

The engine could be forced to low idle within 30 seconds from when the light came on. Pull off the road as soon as possible without being a safety hazard.

See page 126 for a listing on related messages that trigger this telltale.

https://truckmanualshub.com/

4 — No Charge Telltale

The No Charge telltale lights up red when a problem exists in the charging system or when there is no output from the alternator, such as when the engine is not running.

The No Charge telltale lights up dimly when there are several volts difference between the system voltage and the alternator output voltage. The telltale shines brighter as the alternator output voltage drops.

For more information on the electrical system, see page 293.

https://truckmanualshub.com/

Main Instrument Section

G Tachometer (this page)

H Speedometer (page 83)

J Master Warning Telltale (page 84)

K Warning Telltales (page 85)

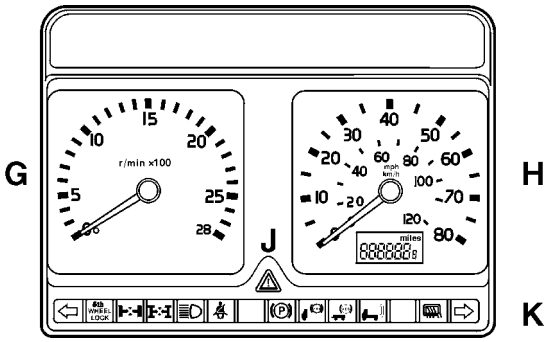

W3003643

G — Tachometer

The tachometer is electrically driven by a signal from the engine. Monitor the tachometer to guide correct gear shifting and to prevent engine overspeeding when descending steep grades. Each engine has its ideal operating ranges for power and economy. Read the engine manufacturer's manual to find out the best ranges for each engine.

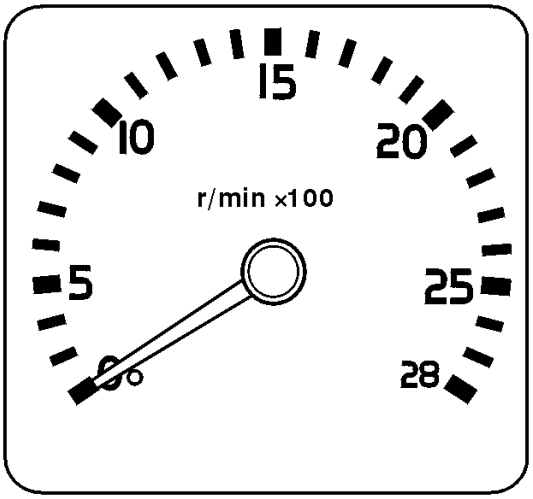

W3003639

CAUTION

Always keep an eye on the tachometer during downhill runs. Do not allow the engine to over-speed. Excessive engine over-speed can result in serious engine damage.

https://truckmanualshub.com/

H — Speedometer and Odometer

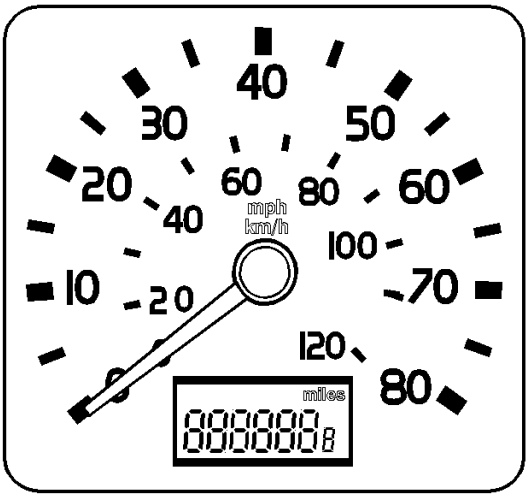

W3003640

The speedometer is driven by the vehicle's electronic system. Recalibration of the speedometer can be made to compensate for tire size changes or other changes in the vehicle driveline. This is done by reprogramming the engine or transmission electronic controller. Reprogramming can be performed by your authorized Volvo Truck dealer.

The odometer is a Liquid Crystal Display (LCD) mounted in the lower speedometer face. The odometer registers up to 999,999.9 miles or km. The internal electronics will make distance conversions between miles and km automatically.

To be able to read the current mileage without turning the ignition on, press any graphic display control to activate the odometer and clock for approximately 30 seconds.

https://truckmanualshub.com/

J — Master Warning Telltale

DANGER

The Master Warning Telltale and buzzer alerts of a dangerous situation. Air pressure is low and the remaining air volume may not be enough for repeated braking. The emergency brakes may engage, causing a wheel lock-up, loss of vehicle control and become a hazard to following vehicles. Bring the vehicle to a controled stop. Failure to follow these precautions can result in loss of braking control and serious personal injury or death can occur as a result of a vehicle accident.

W3000638

This will light up when either front or rear air brake system pressure drops below 60 psi (410 kPa) or lower. The buzzer will also sound when the telltale lights up. When the pressure goes above 60 psi in both front and rear brake circuits, the telltale will automatically go out.

Air brake system pressure should be between 90 to 135 psi (620 to 930 kPa) for normal operation. The master warning telltale comes on and the buzzer sounds when air pressure has dropped to 60 psi or lower. If the air pressure is allowed to drop below 30 to 40 psi (200 to 275 kPa) in both systems, the parking spring brakes will automatically engage and stop the vehicle.

When the master warning telltale comes on and before the parking spring brakes engage, stop the vehicle in a controlled manner at an off-road location so as not to be a hazard to other vehicles on the road. Refer to page 273 for more information about the brakes.

https://truckmanualshub.com/

K — Warning Telltales, Center Section

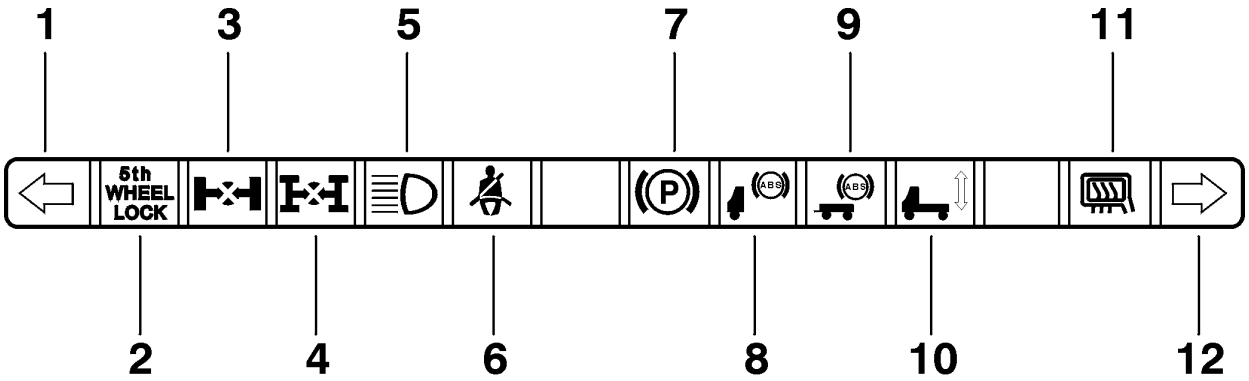

W3003646

1 Left Turn Telltale (page 86)

2 Fifth Wheel Lock Telltale (page 86)

3 Wheel Diff. Lock Telltale (page 86)

4 Interaxle Diff. Lock Telltale (page 86)

5 High Beam Telltale (page 87)

6 Safety Belt Telltale (page 87)

7 Parking Brake Telltale (page 87)

8 Anti-Lock Brake System (Tractor or Truck) Telltale (page 88)

9 Anti-Lock Brake System (Trailer) Telltale (page 88)

10 Air Suspension System Telltale (page 88)

11 Mirror Defroster Telltale (page 88)

12 Right Turn Telltale (page 86)

NOTE! All telltales may not be used in all vehicles.

The telltale strip is located below the tachometer and speedometer. A *yellow* caution telltale indicates that there is a system or component in the vehicle that requires the operator's attention. A *red* warning telltale indicates that there is a system or component that should be checked before the vehicle is driven any further.

https://truckmanualshub.com/

Left and Right Turn Telltales

This lights up green when the turn signal is activated and blinks in time with the outside turn signal lamps. An audible signal also sounds in time with the telltale. A single short beep is heard when the telltale lights up.

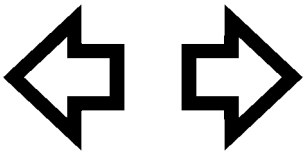

W3000903

5th Wheel Lock Telltale

This telltale will light up yellow when the pneumatic switch for the 5th wheel slide lock is turned on. It will stay lit until the switch is turned to the off position again. See the 5th wheel uncoupling section on page 333 for correct use.

W3000621

Wheel and Interaxle Differential Lock Telltales

These telltales will light up yellow when the pneumatic switches for either the wheel or interaxle differential lock are turned on.

For the interaxle lock, the telltale is activated by the switch. For the wheel lock, a switch in the axle turns the telltale light on only when the lock is actually engaged. It turns the light off only when the lock is actually disengaged. See page 311 for proper differential lock use.

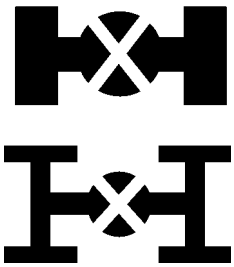

W3000904

https://truckmanualshub.com/

High Beam Telltale

Any time the high beams are activated, by the high/low beam switch or the high beam flash switch, the telltale lights up blue. For information on switching high/low beam, see page 97.

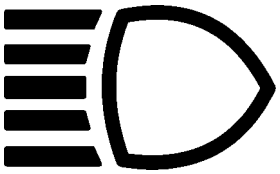
W3001303

Safety Belt Telltale

The telltale lights up red each time the ignition is turned on to remind the driver to fasten the safety belt. It stays lit for 10 seconds and then goes out automatically.

W3000625

Before adjusting the safety belt, make sure the vehicle is stationary and that the seat has been adjusted as required. Do not attempt to adjust the safety belt or seat while the vehicle is in motion. For proper use of the safety belt, see page 52.

Parking Brake Telltale

The telltale lights up red when the parking brake valve knob is pulled out. The daytime running light (DRL) function is also dependent on the parking brake application. Any time the parking brake telltale is on, the DRL is deactivated.

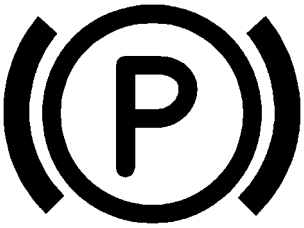
W3000627

DANGER

Never exit your vehicle unless the parking brake is set. Failure to do so can result in unexpected vehicle movement and cause personal injury or death.

For proper use of the parking brake, see page 278.

https://truckmanualshub.com/

ABS Telltale, Tractor and Trailer

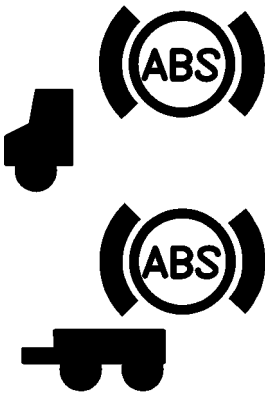

W3000905

The telltale lights up amber if the Anti-Lock Brake System (ABS) senses a problem under the following conditions:

1 The system will go through its self test when the ignition switch is turned on and the telltale should continue to be on. The light should go out when the vehicle speed reaches over approximately 7 mph (11 km/h). If the telltale stays on at higher speed, there is a problem with the ABS.

2 The ABS telltale lights up during driving. The ABS self test has detected a fault in the system.

The vehicle can still be driven with a problem in the ABS. However, the ABS will not be operating and standard air braking is in effect. For more information, see page 285.

The trailer ABS telltale is in effect for vehicles manufactured after February 2001.

Air Suspension Telltale

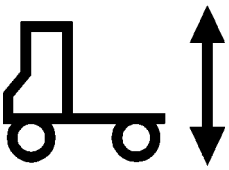
W3002596

The telltale lights up amber when the suspension leveling valve is activated. As long as the switch is activated, the suspension is lower than normal and the telltale is on. For proper use of the suspension level control, see fifth wheel uncoupling on page 329.

Mirror Defroster Telltale (option)

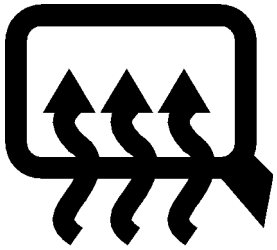
W3000632

The telltale lights up amber when the mirror defrost switch is engaged. Heater temperature is automatically regulated by an internal system in the mirror head.

https://truckmanualshub.com/

Right Instrument Section

L Forward Drive Axle Oil Temperature (option) (this page)

M Rear Drive Axle Oil Temperature (option) (this page)

N Fuel Level Gauge (page 90)

O Application Air Pressure (option) (page 90)
OR
Air Suspension Pressure (option) (page 90)

P Front Brake System Air Pressure (page 91)

Q Rear Brake System Air Pressure (page 91)

R Warning Telltales (page 92)

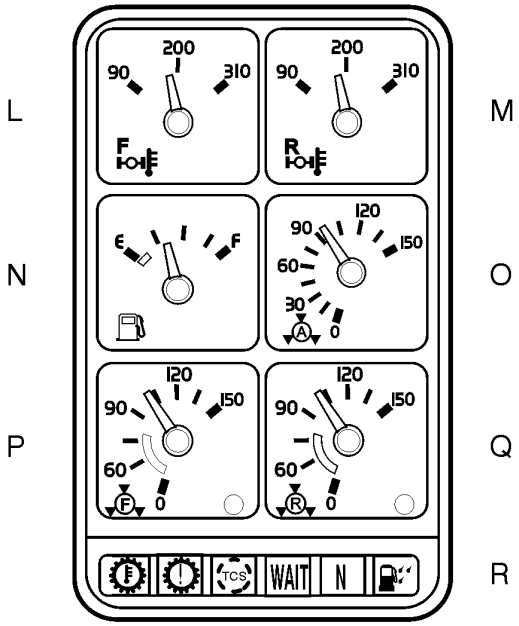

W3004407

L & M — Forward & Rear Drive Axle Oil Temperature (option)

The gauges are connected to temperature senders installed in the axles. Normal operating temperature range is up to 250°F (120°C). If average oil temperature consistently goes above 250°F (120°C), more frequent oil changes are needed or an oil cooler could be installed.

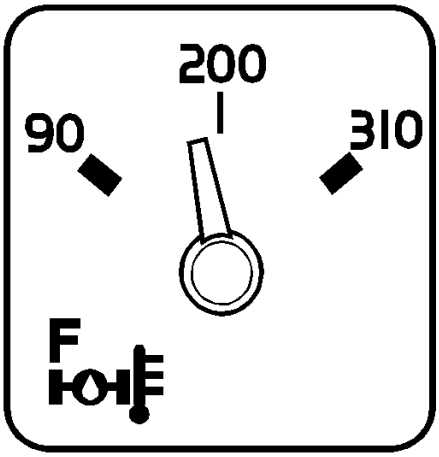

W3003634

CAUTION

A sudden increase in oil temperature that is not caused by a load increase may indicate mechanical failure. Bring the vehicle to a safe stop where the problem can be checked. Do not operate vehicle until correcting the problem.

https://truckmanualshub.com/

N — Fuel Level Gauge

The gauge is connected to a sending unit in the fuel tank. There is only one sender even if the vehicle is equipped with dual tanks.

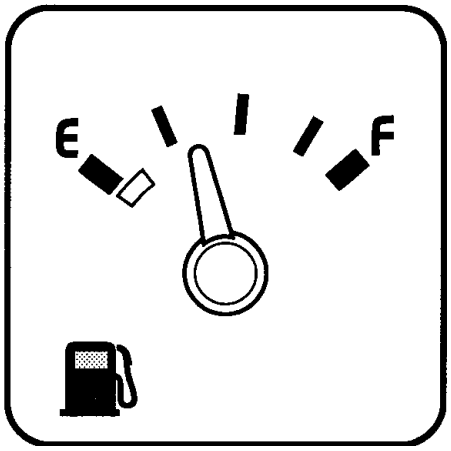

W3003628

O — Application Air Brake Pressure (option)

Air gauges are directly connected to the air brake system. They will indicate the brake application pressure from either the front, rear or trailer circuit pressure.

The gauge will not register air pressure until the foot brake pedal is depressed or the trailer hand brake is applied.

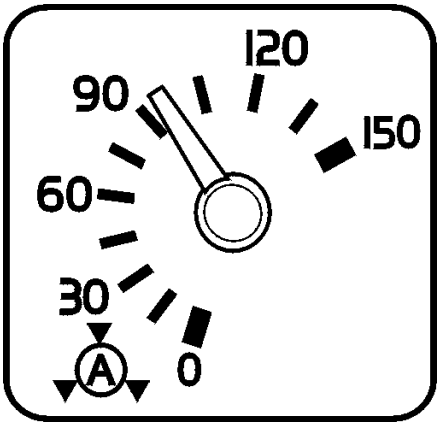

W3004302

O — Air Suspension Pressure (option)

Air gauges are directly connected to the air suspension system. It will indicate the suspension pressure in the air springs.

The pressure shown on the gauge is a crude indication of the load on the rear axle(s). The gauge should not be used for trying to balance the load between the axles.

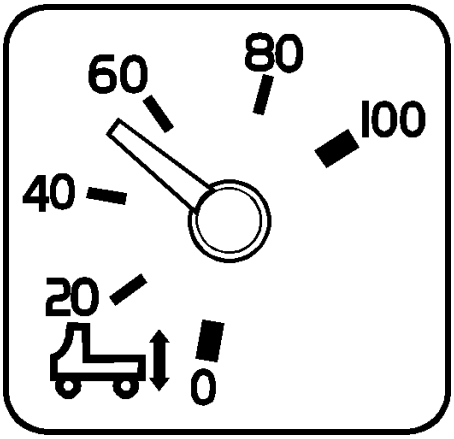

W3003633

https://truckmanualshub.com/

P & Q — Front and Rear Brake System Air Pressures

The system air gauges are directly connected to the front and rear circuit tanks. The two gauges should register equal air pressure. Air brake system pressure should be between 90 to 135 psi (620 to 930 kPa) for normal operation. The pointers in the two gauges should register equal air pressure. By observing the gauge pointers, the operator can detect a pressure drop if an air leak develops and can readily identify the circuit affected. See page 273 for more information.

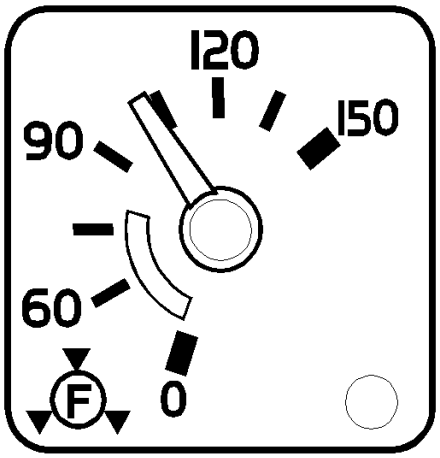

W3003637

There is a low-air warning switch in each gauge. If the pressure in a brake circuit air tank drops below approximately 60 psi (420 kPa), the red indicator in the lower right corner of the gauge will light up and the master warning indicator and the buzzer will simultaneously come on. If the air pressure is allowed to drop below 30 to 40 psi (205 to 275 kPa) in both systems, the parking brakes will automatically engage to stop the vehicle. Refer to page 273 for more information about the brakes.

W3000638

Master Warning Indicator

DANGER

Failure to observe these precautions can result in the loss of braking performance and personal injury or death can occur as a result of a vehicle crash.

https://truckmanualshub.com/

R — Warning Telltales, Right Section

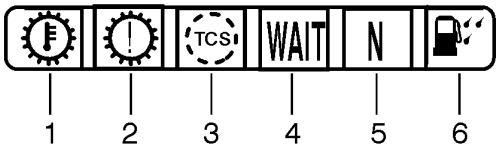

W3004416

1 Transmission Temperature (this page)

2 Check Transmission (this page)

3 Traction Control System (page 93)

4 Wait to Start (Not used)

5 Automatic Neutral (page 94)

6 Water in Fuel (Not used)

Transmission Temperature Telltale

The Transmission Temperature Telltale is for the Allison WTEC III transmission. The amber warning signal lights up and a buzzer sounds when the transmission temperature is too high.

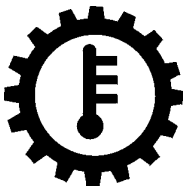
W3004305

Check Transmission Telltale

The Check Transmission Telltale is for the Allison WTEC III transmission. The red warning signal lights up to indicate a transmission problem. Depending on the severity of the problem, shifts may be restricted.

W3004306

https://truckmanualshub.com/

Traction Control System Telltale

The amber telltale will blink only when the Traction Control System (TCS) mud/snow mode is engaged. At all other times, the TCS system operates in the background without indication. The system does not have an on/off switch. See page 287 for more information.

W3000962

The TCS only operates at speeds lower than 25 mph (40 km/h). The system detects wheel spin by comparing wheel speeds and controls the spin by using the brake system to transfer power to wheels with greater traction. Under circumstances where all drive wheels are spinning, the system sends a signal to the engine control unit to reduce power.

The TCS includes a TCS mud/snow switch for turning the system off to increase wheel spin. This function may be desirable in deep snow or mud to keep the vehicle from bogging down.

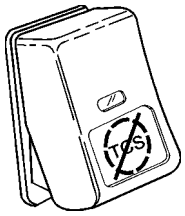

W3001336

To operate, press in the bottom part of the switch. The switch stays in this position and the TCS telltale light blinks to indicate that the mud/snow mode is engaged. To return to normal TCS operation, press the bottom part of the switch again and it will return to rest position.

https://truckmanualshub.com/

Auto Neutral Telltale

W3004308

The Auto Neutral Telltale is for the Allison WTEC III transmission. The green indicator lights up when the transmission is in auto neutral. Auto neutral is activated just before the vehicle comes to a complete stop (less than 1.5 mph [2.5 km/h]). The gear is re-engaged shortly (1–2 seconds) after the brake pedal is released.

Allow for the gear re-engagement when applying throttle; do not increase engine speed before the transmission has engaged. If the engine speed is too high, the transmission will not engage.

CAUTION

When operating the vehicle on normal grades (less than 4%), a slight roll-back can be experienced when the brake pedal is released and before the transmission re-engages.

NOTE! When operating on severe grades (more than 5%), the transmission has a safety feature that can be used. Before releasing the brake pedal, manually press the “DRIVE” key on the Allison gear selector, and the gear is re-engaged manually to assist in preventing roll-back.

https://truckmanualshub.com/

Changing Telltale Bulbs In Cluster

NOTE! Before beginning to work, make sure the vehicle ignition is switched OFF.

If possible, adjust the steering column back. Remove the two screws at the top of the instrument cluster and fold the cluster out and let it rest face-down against the steering column so the bulbs are accessible.

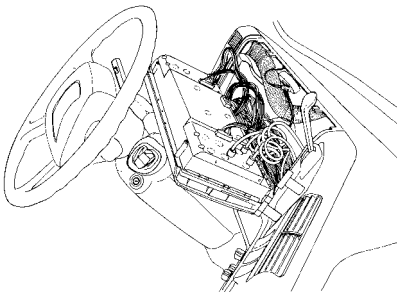

W3000842

CAUTION

Do not let the cluster be in the face-down position for more than maximum 15 minutes. Damage to the gauges can occur by oil running out of them, making the gauge reading inaccurate.

Do not use any other tools for changing the bulbs than the correct tool. Using a pair of pliers could easily cause a short-circuit if power is on, thereby destroying the circuit board.

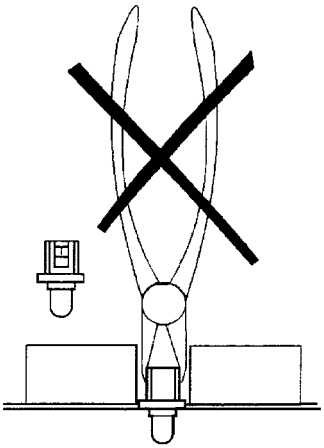

W3001306

https://truckmanualshub.com/

A bulb change tool can be ordered from your Volvo Truck dealer under part number 1089953. Use only this tool to change bulbs in the instrument cluster.

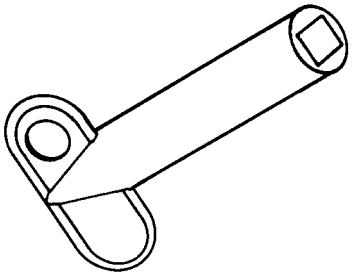

W3000642

To remove bulb, insert tool onto the bulb assembly, rotate a 1/4 turn counterclockwise and pull the bulb assembly out of the cluster.

Insert a new bulb into the tool and install it into the cluster. Rotate the bulb a 1/4 turn clockwise and pull the tool off of the bulb assembly.

NOTE! The telltale area in the right part of the instrument does not use all spaces for active telltales. These bulbs can be used for spare bulbs.

Lift up the instrument cluster and fasten the two screws at the top of the cluster.

https://truckmanualshub.com/

Steering Column Switches

Turn Signal/Headlight Beam Change

W2002694

The turn signal is activated by the lever under the left side of the steering wheel. If the vehicle is equipped with a cruise control, the controls for this are located on the turn signal lever. See page 265 for more information about the cruise control.

The standard turn signal switch is self cancelling. It must be manually returned to neutral position after making a turn. A self cancelling turn signal is available as an option.

For lane changes, the lever does not need to be moved to a locking position. Move the lever partway off the normal position until a resistance is felt. The turn signal is now activated and the lever will return to normal position when it is released.

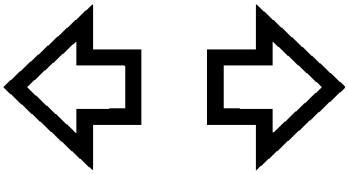

W3000903

The headlight flash function is activated by pulling the turn signal lever toward the steering wheel. The high beam will stay on until the lever is released.

To change between high and low beam, pull the lever all the way toward the steering wheel. When a slight clicking sound is heard, release the lever.

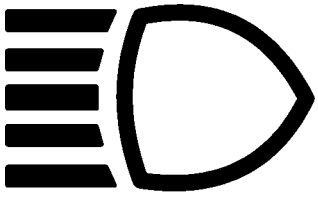

W3001303

NOTE! When switching from high to low beam for oncoming traffic, release the lever as soon as the beam change is made. Holding the lever up makes the headlight flash function stay engaged.

https://truckmanualshub.com/

Windshield Wiper/Washer

The wiper/washer functions are operated by the same switch. The wipers have a normal and a fast speed which are activated by moving the lever down one or two positions. To let the wipers engage for one or two passes, lightly depress the lever until the wipers start and hold it there. The wipers return to the parking position when the lever is released.

W3003655

The interval wiper function is engaged by moving the lever up. The normal programmed speed is one pass every 10 seconds. To shorten the interval time, move the lever to normal wipe position and then to the interval position again when the next wiper pass is desired. In this way, the interval can be programmed between 1 to 10 seconds between each pass.

To operate the windshield washer, pull the lever toward the steering wheel. If washer fluid needs to be added, use a commercially reputable washer fluid that has good cleaning capability and does not freeze in cold weather. Total reservoir capacity is 3.3 gallons (12.5 liters).

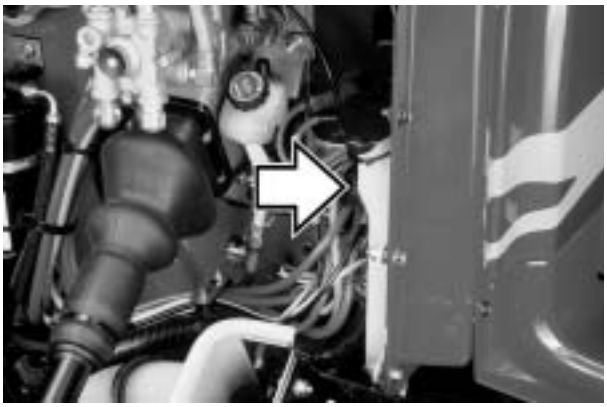
W8000985

An indicator will appear on the graphic display and the yellow ΔINFO telltale lights up when the water fluid is low. A 10 second activation delay allows for fluid slosh.

T3008838

https://truckmanualshub.com/

Left Switch Cluster

This switch cluster has only one switch position permanently filled. Other positions are for optional equipment. The standard switch is for the Hazard Lights.

Other switches that can be located in this cluster are for Back of Cab Light, Headlight Flash, Dome Fluorescent Light in VN-660 & VN–770 and Power Take Off.

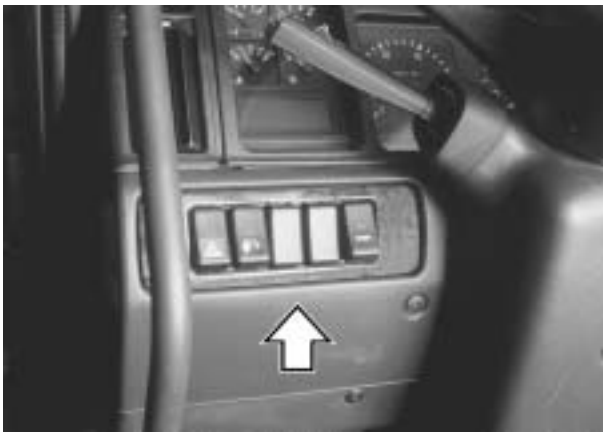

W3002002

Hazard Lights

The hazard or four-way warning circuit is activated by pressing in the bottom part of the switch. The indicator light in the switch will flash in unison with the outside lights. The hazard lights function independently from the ignition switch.

Activate this function only when the vehicle is stopped where it might be a danger to other vehicles or to alert others of a problem that changes the traffic rhythm.

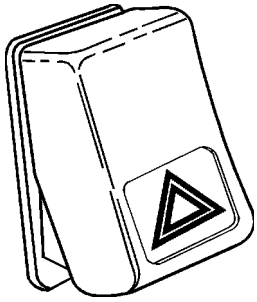

W3001350

Back Of Cab Light (option)

Turn on the back of cab light by pressing in the bottom part of the switch. The light will stay on until the switch is returned to off-position.

Back-of-cab lights are available as a flush-mounted light in the middle of the cab rear wall or as a high-mounted light on the side of the cab.

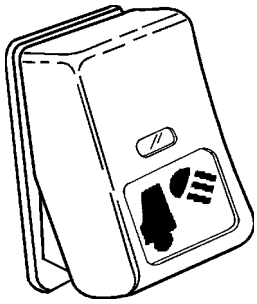

W3001355

https://truckmanualshub.com/

Headlight Flash Switch (option)

The headlight flash switch will momentarily turn the headlights off when pressed. The switch will return when released, turning headlights on again. This switch functions when either of Daytime Running Lights or low beam headlights are on.

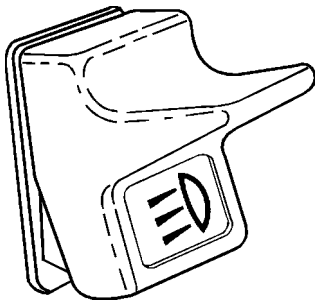

W3002306

Sleeper Overhead Lighting, VN–770

This operates the fluorescent overhead lighting in the VN-770 sleeper cab. It is located so the light can be accessed without entering the sleeper section of the cab.

The switch works together with the switch on the sleeper control panel (see page 204). Depending on the position of the other switch, switching on the light may have to be done by pressing in the top or the bottom part of the switch.

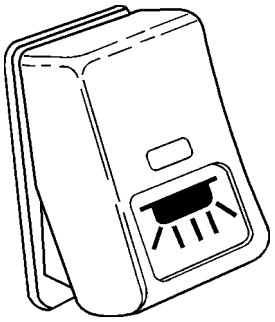

W3001351

https://truckmanualshub.com/

Power Take Off

There are two basic types of PTOs available: engine mounted and transmission mounted. The transmission mounted PTO is clutch dependent, which means that operation can be regulated by depressing or releasing the clutch pedal. This type of PTO should not be in use while driving.

The engine mounted PTO is direct-mounted to the engine and is engaged with a bypass valve operated by the switch. This type of PTO can be in use while driving.

NOTE! If your vehicle is equipped with Autoshift and a Detroit Diesel engine, the PTO telltale may blink when Autoshift is on and the transmission shifts gears.

Transmission Mounted PTO

The vehicle should be stopped before engaging power take off. Engage the PTO by depressing the clutch pedal and pressing in the bottom part of the switch. Release the clutch pedal to start the PTO.

One or two PTOs can be run at the same time. Applications change depending on customer needs and components.

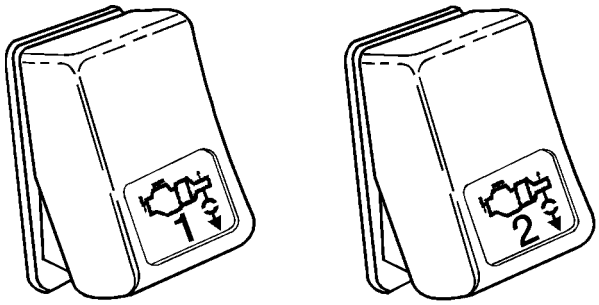

W3001994

https://truckmanualshub.com/

Engine Mounted PTO

The engine should be running at low idle and the vehicle should be stopped or running at very low speed before engaging power take off. Engage the PTO by pressing in the bottom part of the switch. The PTO is now in operation and hydraulic flow can be regulated by the engine speed.

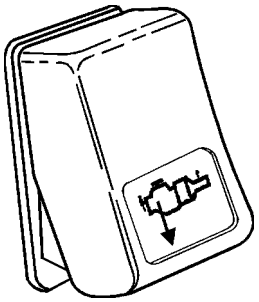

W3001993

https://truckmanualshub.com/

PTO Speed Adjustment

Have the PTO engaged before adjusting the speed. For the PTO speed adjustment to function, the Cruise Control or idle adjust can not be active, brake and clutch pedals must be released, and vehicle speed must be under approximately 5 mph (8 km/h).

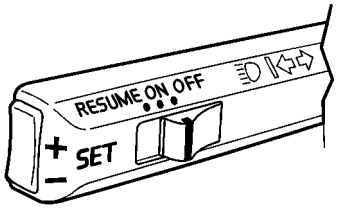

W3002499

To set engine speed:

1 Set the PTO/CC switch in the ON position.

2 Use the accelerator to increase engine speed.

3 Momentarily press the SET+ or SET- switch to set current engine speed.

To increase/decrease engine speed:

1 Press and release the SET+ or SET- toggle switch to increase/decrease speed in increments (increment size depend on programmed value).

2 Press and hold the SET+ or SET- toggle switch to increase/decrease speed. When the switch is released, the engine speed sets at current speed.

To resume engine speed:

1 If the PTO function was interrupted, resume set speed by pressing the PTO/CC switch to RESUME and releasing.

To deactivate PTO speed function:

1 Set the PTO/CC switch to the OFF position.

2 Press down the service brake pedal.

3 Depress the clutch pedal.

4 Increase vehicle speed above PTO working range (typically 5 mph [8 km/h]).

https://truckmanualshub.com/

Driving Light Switches

Headlights

The headlight switch controls parking lights and headlights. It is a two position rotary switch, turning on parking lights, cab marker lamps and taillights in the first position and turning on headlights in the second position.

W3000955

To change between high and low beam, pull the direction indicator lever all the way toward the steering wheel. When a slight clicking sound is heard, release the lever.

NOTE! When switching from high to low beam for oncoming traffic, release the lever as soon as the beam change is made. Holding the lever up makes the headlight flash function stay engaged.

The headlight is combined into one aerodynamic assembly. The halogen bulbs are accessed from the rear of the assembly. Headlights do not need to be checked for aim after bulb replacement. For more information on changing the headlight bulb, see page 308.

W3000953

Daytime Running Lights (DRL) are standard. They are automatically switched on when the parking brakes are released (ignition must be on) and will stay on until the parking brakes are engaged.

NOTE! Do not use DRL at night or at any time visibility is reduced. DRL is not a substitute for the main vehicle lights when driving at night.

https://truckmanualshub.com/

Driving and Fog Lights (option)

Combinations of driving and fog lights can be mounted in standard locations in the aerodynamic bumper or from the underside of the steel bumper. These are operated by a switch next to the headlight switch.

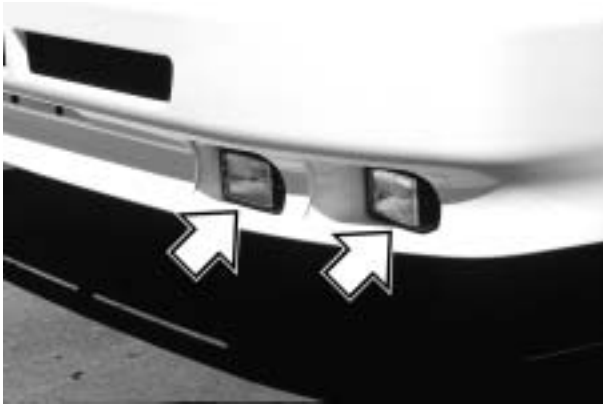

W3000954

Fog and driving lights are wired so they are turned on only when the headlight switch is on. Fog lights are used with the parking lights and the low beam headlights. Driving lights are used with the high beam headlights. Switching from low to high beam will automatically switch from fog lights to driving lights.

Driving and fog lights should be used when driving conditions require additional lighting. The driving or fog lights should not be used in traffic where they might distract other drivers thereby creating a safety hazard.

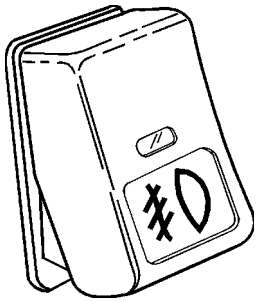

W3001356

If the fog/driving lights are added to the vehicle as an accessory later on, make sure the light controls are wired as described above.

https://truckmanualshub.com/

Right Switch Cluster

This switch cluster can hold up to six optional equipment switches. Planned functions are Marker Interrupt, Traction Control (TCS), Exhaust or Engine Brake and Heated Mirrors.

W3000972

Marker Interrupt Switch

The switch interrupts power to the marker lights when held down. When released, it will spring back to the ON position and return power to the marker lights.

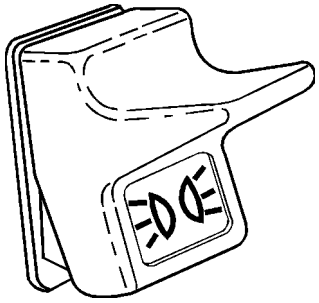

W3001352

Traction Control Switch

If the vehicle is equipped with a Traction Control System (TCS), there is a switch that can be used for increasing wheel spin. This may be useful for decreasing the chances of getting bogged down when driving in heavy snow, slush or muddy conditions. See page 287 for more information.

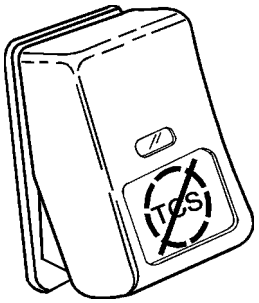

W3001336

https://truckmanualshub.com/

Exhaust/Engine Brake

DANGER

When operating your tractor bob-tail without a trailer or on slippery roads, the engine brake switch must be in the "OFF" position. Failure to follow these instructions can result in loss of vehicle control and serious personal injury or death may occur.

WARNING

A vehicle speed retardation device (such as "Jake Brake," "C-Brake," "Exhaust Brake," etc.) is **not** intended to replace the service brake system on your vehicle **nor** intended to bring your vehicle to a *stop*. A vehicle speed retardation device is only intended to retard the speed of your vehicle under certain conditions.

NOTE! It is *normal* for there to be a slight delay in the application of a vehicle speed retardation device. When using a device of this type, be sure to *think ahead* and *analyze* conditions in order to use the device properly.

https://truckmanualshub.com/

Several types of engine brakes can be installed or are standard on certain engines. All are used to reduce wear on the vehicle brake linings.

Exhaust Brake, Volvo Engine

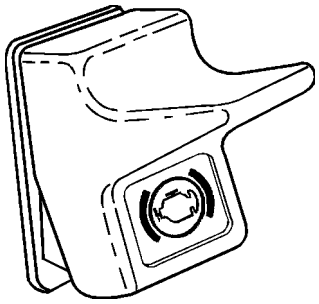
W3001324

The exhaust brake is standard equipment on the Volvo engine. It provides braking effect to the rear wheels by trapping the exhaust in the engine. The switch for exhaust brake has two positions: ON and OFF.

The exhaust brake is most effective at high engine speed (1,500 to 2,300 r/min). For proper operation, see page 289.

Engine Brake, Volvo Engine — Optional

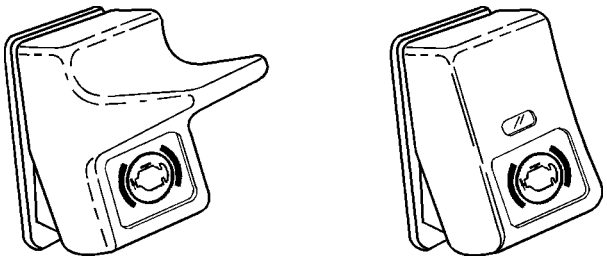
W3002303

The Volvo Engine Brake (VEB) is a compression brake. It works together with the exhaust brake to provide two levels of braking power. The switch has three positions: OFF, LOW and HIGH. With the switch in position LOW, only the exhaust brake is engaged. With the switch in position HIGH, both the exhaust brake and compression brake are activated. For proper operation, see page 290.

Jake Brake or C–Brake — Optional

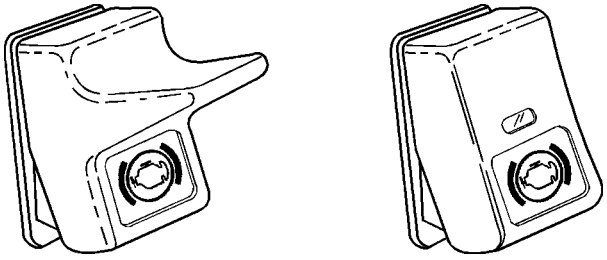
W3002303

These engine brakes are similar in operation and are compression brakes. Three power levels are available by engaging 2, 4, or 6 cylinders in the braking (for Cummins M11, only two power levels are available).

The left of the two switches is the ON/OFF switch. The right switch is for selecting the amount of braking power with positions LOW, MED. and HIGH (for Cummins M11, only LOW and HIGH). For proper operation, see page 291.

https://truckmanualshub.com/

Heated Mirror Switch (option)

The vehicle can be equipped with heated mirrors. The switch turns on an electric heater element that is a part of the mirror glass. The heater is self regulating and will keep a steady temperature after reaching operating temperature. Both top and bottom mirrors are heated.

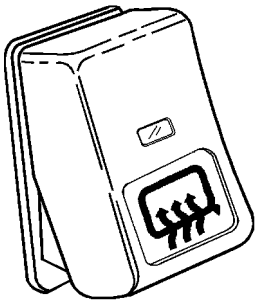

W3003492

Turning the switch on activates a telltale in the instrument cluster. The telltale will stay on until the switch is turned off.

https://truckmanualshub.com/

Pneumatic Switch Cluster

The pneumatic switch cluster can have up to four optional equipment switches. They regulate air flow directly to the following equipment: Differential Lock-Wheel and Interaxle, Air Suspension Level and Fifth Wheel Slide.

To prevent accidental engagement, each switch has a latch that needs to be pressed down before the switch can be operated.

W3002003

Differential Locks (option)

There are differential locks available for each driving axle (4x2 or 6x4) or between axles on a 6x4. The differential lock eliminates one-wheel spin-out on slippery surfaces and improves traction. Each switch has a safety latch to prevent accidental engagement. When the lock is engaged, a telltale lights up in the instrument cluster.

A differential lock should only be used on a slippery surface and not when driving on good road conditions. If a differential lock telltale is activated in the instrument cluster, do not make turns until the telltale has gone out. See page 311 for information on how to properly engage and drive with differential locks engaged.

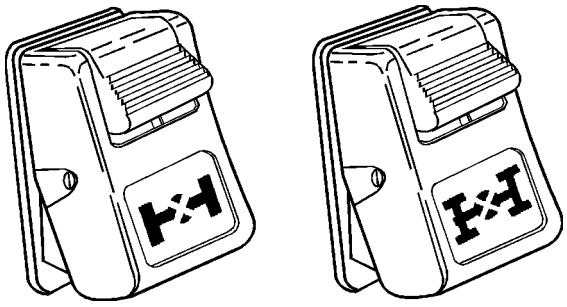

W3001991

Left: Wheel diff. lock
Right: Inter-axle diff. lock

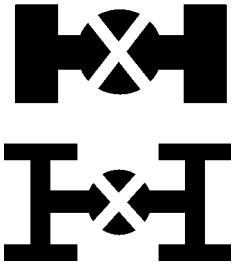

W3000904

Telltales

https://truckmanualshub.com/

Suspension Level

CAUTION

The vehicle must never be driven with the air springs deflated. Damage to air suspension parts will occur if springs are not inflated properly.

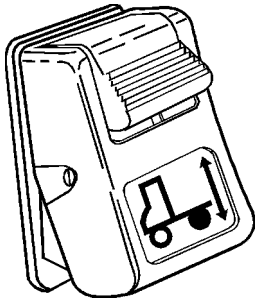

W3001341

Tractors with rear air suspension have a control for deflating the air springs. Use this when uncoupling from trailers. See page 329 for correct operation when uncoupling.

The switch has a safety latch to prevent accidental engagement. Depress the latch and press in the bottom part of the switch to deflate the air springs. A telltale in the instrument cluster will light up when the switch is in the “on” position.

Sliding Fifth Wheel

DANGER

The release must never be operated while the vehicle is operating on the road. Fifth wheel position adjustment must only be done when stationary. Damage to the fifth wheel, trailer kingpin and slider may occur if not operated properly and may lead to an accident, causing serious personal injury or death.

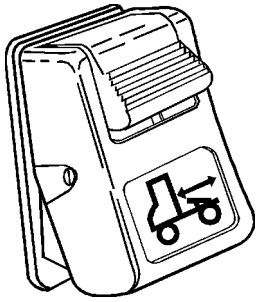

W3001346

Tractors with a sliding fifth wheel mounting have an air operated release as standard equipment. The sliding fifth wheel is used for distributing loads more favorably between the front and rear axles to comply with varying state and provincial laws. See page 333 for correct operation.

Depress the latch and press in the bottom part of the switch to release the slider locks.

https://truckmanualshub.com/

Optional Switch Cluster

The optional switch cluster can either be used for additional switches when the other clusters are used up or can be removed to house more radio equipment. The opening is a standard DIN radio slot.

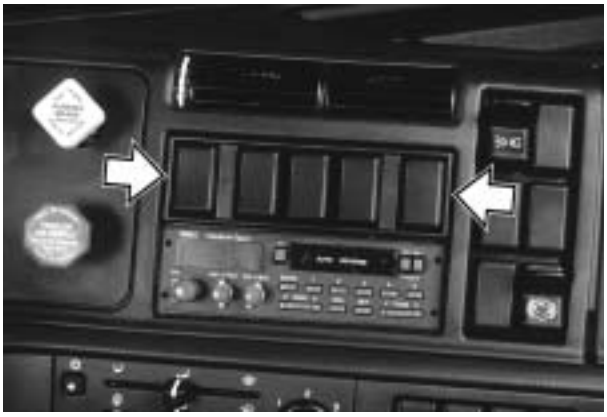

W3000973

Generic switches are available for auxiliary functions that are installed by the customer. These should be located in the optional switch cluster and can be purchased from your local Volvo Truck dealer.

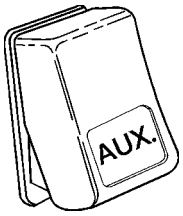

W3002419

The optional switch panel can be removed and a radio or a Volvo Road Relay can be installed.

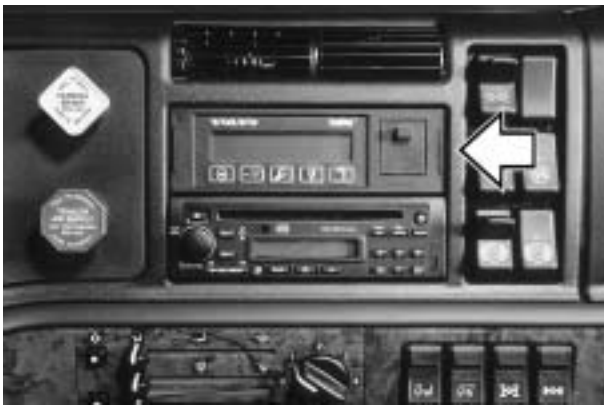

W3002420

https://truckmanualshub.com/

Miscellaneous Switches

Horn Switches

Electric and air horns are standard equipment. They are both operated from the steering wheel. The air horn button (1) is located in the middle of the steering wheel. If the vehicle is equipped with an airbag (SRS), the airbag module can be pressed down anywhere around the edge to engage the air horn.

There are two buttons for the electric city horn (2) located on the steering wheel spokes.

W8000947

Instrument Light Dimmer Switch

The switch is a rheostat that controls the instrument light. Instrument light is activated by the headlight switch. Light intensity can be varied from off to full brightness by turning the rheostat clockwise or counterclockwise.

W3000956

Cigar Lighter

To operate the cigar lighter, press in the center until it stays in. The heater element will heat up and pop the lighter out when it is ready for use.

The ash tray is located next to the cigar lighter.

W3000959

https://truckmanualshub.com/

Graphic Display Overview

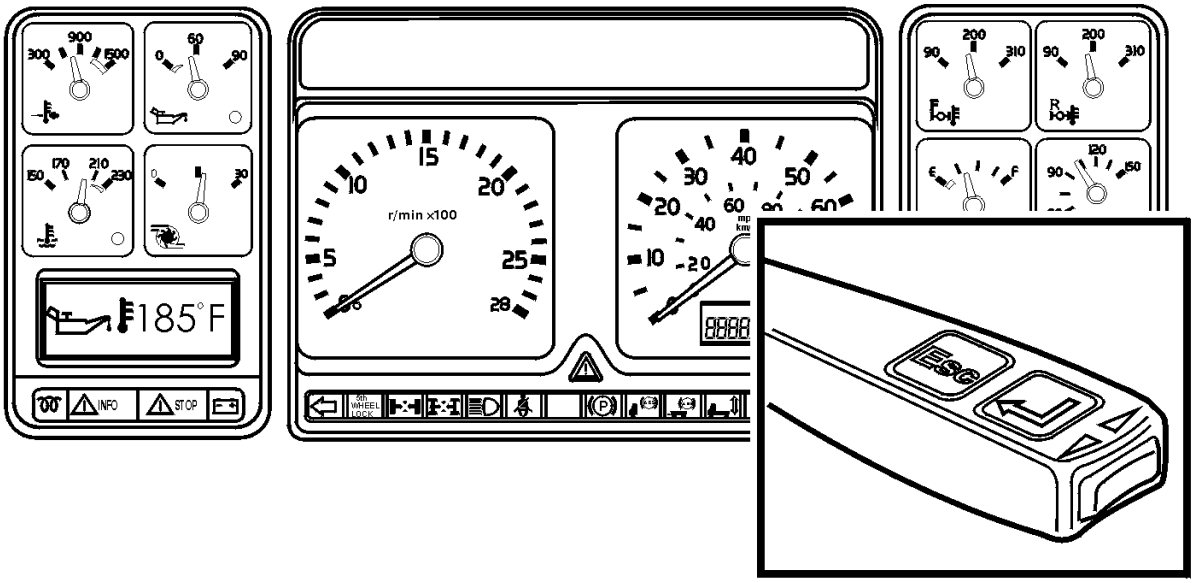

T3010426

The display in the bottom left-hand corner of the instrument cluster presents operational information to the driver. The display menus and functions are selected with the controls on the right-hand side of the steering wheel. Certain information will be shown automatically (e.g. warning messages that need immediate attention).

The display has a large number of main menus and sub-menus used for selecting the correct functions. This section describes each function: how the display functions are accessed with the controls on the windshield wiper lever and which actions are required by the driver when messages are automatically shown in the display.

The information which is accessible varies, depending on whether the truck is in a driving or non-driving mode. Certain functions are protected by a password and are not shown until the correct password has been entered. Password protected functions are described in Service Manual "*Instrumentation, VN, from 3/99 and VHD*"(see page 341 for order information).

In order to control a specific function it is important to know which menu you are working in. When a function is described in this section, the information contains the menu name. For example:

"MENU:" Set-Up Mode, Language.

https://truckmanualshub.com/

Graphic Display Controls

DANGER

If the vehicle is in motion, use the display controls carefully. Do not lose road concentration. Be familiar with operation of the controls. Shifting concentration to operating the controls can lead to losing control of the vehicle and may result in serious personal injury or death.

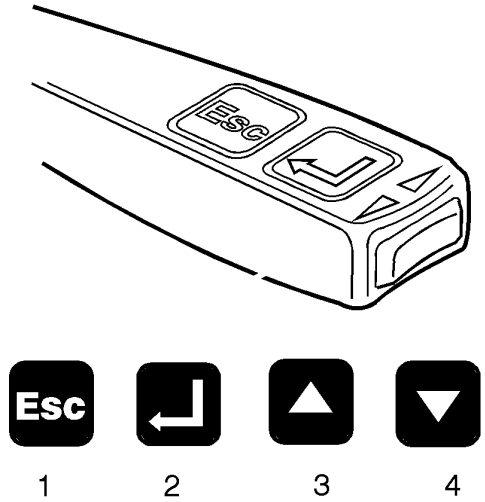

T3008810

The controls for the graphic display are located on the windshield wiper lever on the right-hand side of the steering wheel. The following commands are available:

1 “Esc” is used to return to the previous menu and cancel a setting/operation.
2 “Select” confirms a highlighted selection of a menu or character.
3 “Up arrow” moves the cursor up. Used when setting numerical values.
4 “Down arrow” moves the cursor down. Used when setting numerical values.

Selecting a Menu

1 Using the up/down buttons the cursor is moved to the particular menu, which is then highlighted. A down arrow in the lower right-hand corner shows whether there are any more menus available. If this is the case, you can continue to step down through the list (see the adjacent example).

Set-up mode
System diagnostic
Data log mode
Password Input ↓

2 Pressing SELECT confirms the choice.

3 Pressing Esc exits the chosen menu. By pressing Esc repeatedly, the cursor is moved successively back to the main menus.

https://truckmanualshub.com/

Changing Settings

1 The up/down buttons increase or reduce the set values (e.g. hours and minutes in the adjacent example).

2 Pressing SELECT confirms the choice.

3 If there are several settings to change in the same menu, the cursor is moved to the next setting using the up/down buttons (e.g. the selection between ON, OFF and SET in the adjacent example).

4 Esc moves the highlight to the previous number or selection, if there are any, otherwise the setting is cancelled.

ALARM	08:20	
CLOCK	08:00	
ON	OFF	SET

Display Menus

There are a number of main menus, each with sub-menus, that lists functions available. There are two types of menus: Those that are available when the vehicle is in motion and those that can only be accessed when stationary. Several non-driving submenus are only accessible with a password.

The password-protected menus are not covered in this manual (see page 158).

While the vehicle is stationary, there are 4 menus in addition to the 4 drive menus. Also, the menu TIME/DISTANCE has one additional function while the vehicle is stationary.

Non-Driving Mode Menus

- Set-Up Mode
  (see page 132)
- System Diagnostic
  (see page 137)
- Data Log Mode
  (see page 152)
- Password Input
  (see page 158)

Driving Mode Menus

- GAUGE
  (see page 159)
- FUEL ECONOMY (option)
  (see page 163)
- TIME/DIST
  (see page 165)
- FAULTS?
  (see page 170)

https://truckmanualshub.com/

Graphic Display Telltales

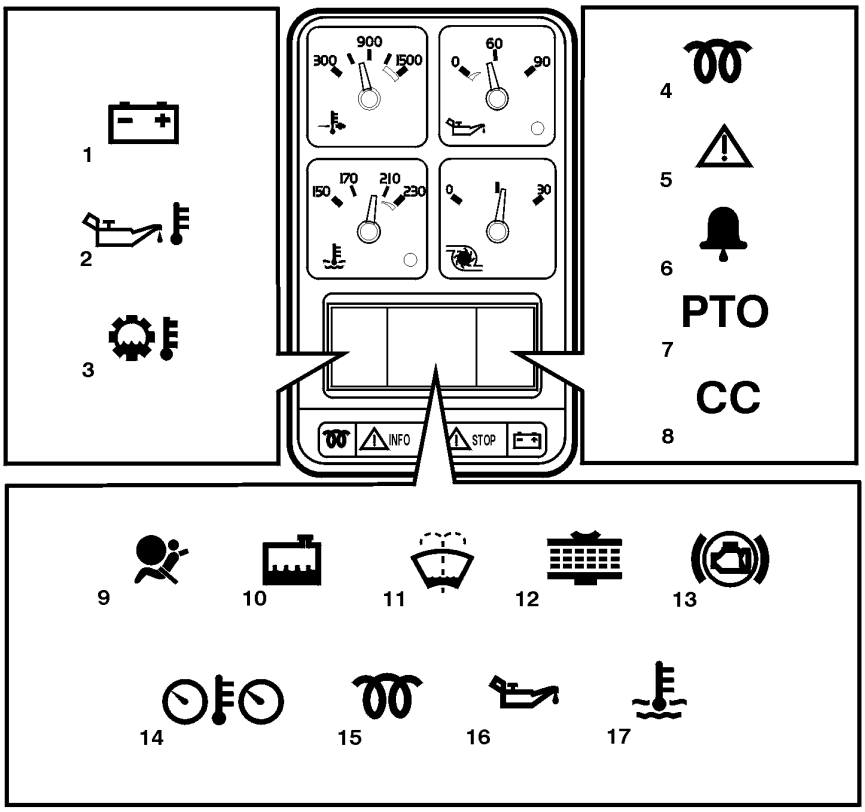

W3003534

1 Voltmeter (page 162)
2 Engine oil temperature (page 159)
3 Transmission oil temperature (page 125)
4 Preheating active (page 78)
5 Acknowledged warning (page 130)
6 Alarm clock on (page 167)
7 PTO engaged (page 101)
8 Cruise control engaged (page 265)
9 Airbag (SRS) (page 63)
10 Coolant level (page 126)
11 Washer fluid level (page 120)
12 Engine airfilter clogged (page 121)
13 Too cold for engine brake (page 289)
14 Overheating, instrument cluster (page 120)
15 Engine preheat fault (page 249)
16 Engine oil pressure (page 76)
17 Coolant temperature (page 75)

https://truckmanualshub.com/

Information and Stop Messages

The information and stop messages work together with the ΔINFO or ΔSTOP telltales below the Graphic Display. If the engine is running, the buzzer will sound at any time the ΔSTOP telltale comes on.

Information Telltale

NOTE! When the yellow ΔINFO telltale lights up, the indicated fault should be checked at the next stop.

T3008860

See page 119 for a listing of other telltales that are linked to the ΔINFO telltale.

Stop Telltale

DANGER

Failure to take necessary action when the ΔSTOP telltale is on, can ultimately result in automatic engine shutdown and loss of power steering assist. Vehicle crash resulting in personal injury or death can occur. Bring the vehicle to a safe stop where the problem can be checked.

T3008861

See page 126 for a listing of other telltales that are linked to the ΔSTOP telltale.

More than one message can be active at the same time. When a new message is activated, the new one is shown instead of the old. A downward pointing arrow in the right-hand corner of the display means that several messages are active.

https://truckmanualshub.com/

Information Telltale

General

T3008860

The yellow ⚠INFO telltale lights up when an abnormal status is detected by an electronic control unit. A telltale or text, or both, are shown in the display in addition to the ⚠INFO telltale. For certain telltales, a reference value is also shown.

The telltales are described starting on page 120, text messages are described starting on page 123 and combined telltale and text messages are described starting on page 125.

Important! When this telltale lights up, the indicated fault should be checked at the next stop.

Information messages can be put on standby if other information needs to be accessed on the display. See page 130 for information on how to acknowledge messages and how to recall messages.

https://truckmanualshub.com/

Telltales

The yellow ⚠INFO lights up and a telltale is shown in the graphic display, describing in what component the problem has occurred:

Airbag

The airbag (SRS) is described on page 63.

T3008842

CAUTION

The vehicle should be taken to an authorized Volvo Truck dealer immediately if the SRS telltale stays on or lights up when the vehicle is being driven.

Instrument Cluster Overheating

The symbol is shown when the temperature behind the instrument cluster is too high. The instrument lighting becomes weaker and the indicators on the instrument show a minimal reading. Lower the heat in the cab! When the heat is reduced, the instrument functions will gradually be restored.

T3008840

NOTE! If the temperature is too high over a prolonged period, the instrument cluster can be damaged.

Washer Fluid Level

The telltale lights when the washer fluid is low.

T3008838

https://truckmanualshub.com/

Air Filter Blocked (option)

When the telltale lights, the engine air filter is blocked. A blocked filter will cause higher fuel consumption and black smoke. To replace air filter, see the *Operator's Manual, Maintenance and Engine*.

T3008843

Too Cold for Engine Brake (Volvo Engine Only)

Position 2 of the engine brake should not be switched on until the engine has become warm (over 110°F [45°C]). If position 2 is selected and the engine is too cold, this symbol will be shown (however, VEB is not activated).

T3009355

Fault in Preheating

See page 249 for more information on the Volvo engine preheater.

T3008841

https://truckmanualshub.com/

Transmission Oil Temperature

This telltale lights when the transmission oil temperature is too high. It is shown with a text information about the temperature. See page 125 for more information.

T3008831

Charging System

This telltale lights when there is a problem in the charging system. It is shown with text information of the charging system status. The voltage is shown together with the message TOO HIGH. See page 162 for more information.

T3008832

Engine Oil Temperature

This telltale lights if the engine oil temperature becomes too high. It is shown with the text TOO HIGH. The engine power is derated. The temperature limit for activation varies for different engines. See page 159 for more information.

T3008830

https://truckmanualshub.com/

Text

The yellow ⚠INFO telltale lights up and information text is shown on the display. The text contains information on where the fault has occurred as well as the type of fault (applies to the data link):

Factory installed equipment:

CHECK
ENGINE
NEXT STOP

T3008860

Specific data link fault:

CHECK
ENGINE
DATA LINK

T3008860

https://truckmanualshub.com/

Data link broken:

CHECK
DATA LINK
BROKEN

T3008860

Not factory installed equipment:

The following can be shown if equipment has been added by a customer and connected to the data link:

MID (Message IDentifier) = controller

To find more information on the data link diagnostic function, see page 137.

CHECK
ERROR IN
MID 142

T3008860

https://truckmanualshub.com/

Telltale + Text

The yellow ΔINFO telltale lights up and information text together with a value is shown on the display. The text contains information on where the fault has occurred and the value will show how much above or below the limit the current conditions are:

Transmission Oil Temperature

If the transmission oil temperature becomes too high, the ΔINFO telltale lights up automatically with the text HIGH. This telltale and text will come on when the oil temperature has been 210°F (100°C) or above for 30 minutes or 250°F (120°C) or above for 10 minutes.

NOTE! If the temperature goes over 285°F (140°C), a STOP message will be generated, see page 129.

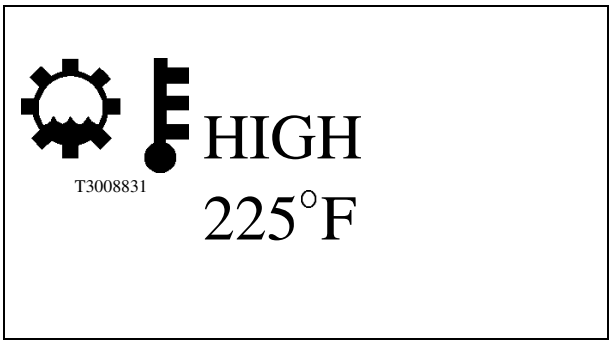

T3008860

Voltmeter

The voltmeter value, including the text TOO HIGH, is automatically shown if the charging system voltage becomes too high.

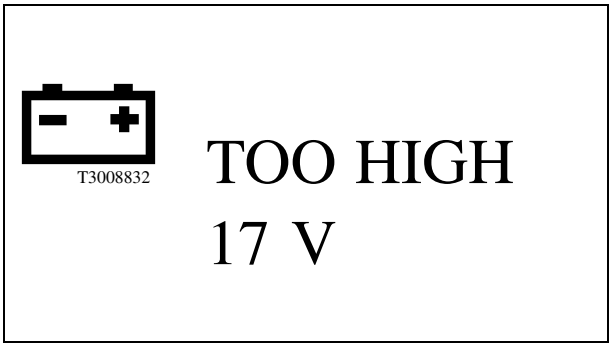

T3008860

https://truckmanualshub.com/

Stop Telltale

In the event of a serious fault, the red ΔSTOP telltale lights up and the buzzer sounds (if the engine is on). In addition to the ΔSTOP telltale, a symbol or text, or both, are shown in the display. A reference value is also shown for certain telltales.

T3008861

Telltales

Coolant Level

DANGER

Failure to take necessary action when the ΔSTOP telltale is on, can ultimately result in automatic engine shutdown and loss of power steering assist. Vehicle crash resulting in personal injury or death can occur. Bring the vehicle to a safe stop where the problem can be checked.

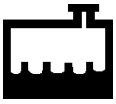
T3008851

The telltale is shown if the coolant level is too low. During check Pre–trip (option) a text message is shown if the level is too low.

https://truckmanualshub.com/

Engine Oil Pressure

DANGER

Failure to take necessary action when the ΔSTOP telltale is on, can ultimately result in automatic engine shutdown and loss of power steering assist. Vehicle crash resulting in personal injury or death can occur. Bring the vehicle to a safe stop where the problem can be checked.

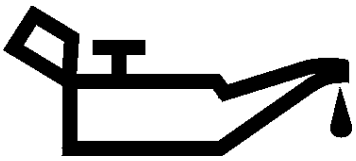
W3003613

T3008861

Shown when the engine oil pressure is too low. The LED in the gauge lights up together with the telltale and the buzzer also sounds. Depending on the engine manufacturer's program in the ECU, the trip point may differ slightly for different engines.

Coolant Temperature

DANGER

Failure to take necessary action when the ΔSTOP telltale is on, can ultimately result in automatic engine shutdown and loss of power steering assist. Vehicle crash resulting in personal injury or death can occur. Bring the vehicle to a safe stop where the problem can be checked.

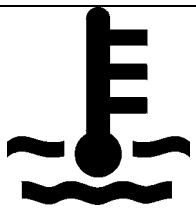
W3003614

T3008861

The symbol is shown when the coolant temperature is too high.

https://truckmanualshub.com/

Text

The red ⚠STOP telltale lights up and information text flashes on the display. The buzzer sounds if the engine is running. The text includes information about where the fault has occurred:

DANGER

Failure to take necessary action when the ⚠STOP telltale is on, can ultimately result in automatic engine shutdown and loss of power steering assist. Vehicle crash resulting in personal injury or death can occur. Bring the vehicle to a safe stop where the problem can be checked.

Specific data link fault:

STOP!
DATA LINK
BRAKES

Factory fitted equipment:

STOP!
ENGINE
FAILURE

Not factory fitted equipment:

The following is shown if the customer has fitted equipment which is connected to the data link:

MID (Message IDentifier) = controller.

STOP!
FAILURE IN
MID 142

To find more information on the data link diagnostic function, see page 137.

https://truckmanualshub.com/

Telltale + Text

The red ΔSTOP telltale lights up and information text together with a value is shown on the display. The text contains information on where the fault has occurred and the value will show how much above or below the limit the current conditions are:

Warning, temperature transmission oil

If the temperature of the transmission oil becomes too high, the red ΔSTOP telltale is shown automatically with the text TOO HIGH. This warning will come on when the oil temperature has been 285°F (140°C) or above for over 30 seconds.

T3008831

DANGER

Failure to take necessary action when the ΔSTOP telltale is on, can ultimately result in automatic engine shutdown and loss of power steering assist. Vehicle crash resulting in personal injury or death can occur. Bring the vehicle to a safe stop where the problem can be checked.

T3008861

https://truckmanualshub.com/

Acknowledge Information and Stop Messages

By pressing Esc, the display with the fault message is reset and the graphic display returns to the same status as before the error occurred. An acknowledged fault message is shown as a symbol on the right in the graphic display window. All types of fault messages can be acknowledged. Acknowledged but active messages are shown again when the ignition key is turned to the start position.

T3008852

Yellow ⚠INFO telltale: The text message, yellow ⚠INFO telltale and the symbol can be acknowledged using Esc. This warning is acknowledged until the next time the ignition key is turned to the start position.

T3008860

Exceptions: The message can be shown again if the fault is de-activated and then becomes active again.

Example: If the engine oil temperature becomes too high a message is activated automatically. The driver acknowledges this message using Esc. If the temperature then drops to a normal level but then becomes too high again the warning is activated again.

Red ⚠STOP telltale: The buzzer, text message and the symbol can be acknowledged using Esc, but are active again 10 seconds after pressing the button. The red ⚠STOP telltale remains lit the whole time.

T3008861

https://truckmanualshub.com/

Recall

An acknowledged fault message can be recalled, i.e. be shown on the graphic display again.

MENU: FAULTS?

1 SELECT confirms the choice of the menu **FAULTS?** The last acknowledged fault message is shown. If there is more than one message, a down arrow is shown in the right-hand corner.

2 The up/down buttons move the cursor between the current messages.

If an acknowledged fault message is still active at the next occasion the ignition key is turned to the ON position this is shown as a non-acknowledged message. NO FAULTS is shown if there are no fault messages.

https://truckmanualshub.com/

Main Menu: Set-Up Mode

The menu **Set-up mode** has 14 sub-menus where 6 are not protected by passwords and 8 are protected by passwords.

- **Language**
- **Mi/°F/USgal or km/°C**
- **Clock format**
- **Contrast**
- **Backlight**
- **Night display**

Password is required:
(see page 158)

- **Default language**
- **Fleet limit: r/min**
- **Fleet limit: speed**
- **Fleet fuel target**
- **Odometer setting**
- **Fleet ID**
- **Password config.**

Language

MENU: Set-up mode, Language

This setting of language applies only until the ignition key switch is turned off. To change the language permanently, a password is required (see page 116).

1 To set the desired language, press SELECT when you are in the menu **Set-up mode, Language**.

2 On the graphic display up to three different languages will now be shown. Select the desired language by moving the cursor to the particular row. Confirm the choice with SELECT.

English
Spanish
French

Cancel setting

Press Esc in order to cancel the setting.

https://truckmanualshub.com/

Miles/°F/USgal or km/°C

MENU: Set-up mode, Mi/°F/USgal or km/°C

NOTE! If Miles and Fahrenheit are chosen, the fuel consumption is shown in US gallons. If kilometers and Celsius are chosen, the consumption is shown in liters.

1 Select the menu **Set-up mode, Mi/°F/USgal or km/°C** and the following diagram is shown on the graphic display (with the particular setting highlighted):

The up/down buttons move the cursor between the alternatives.

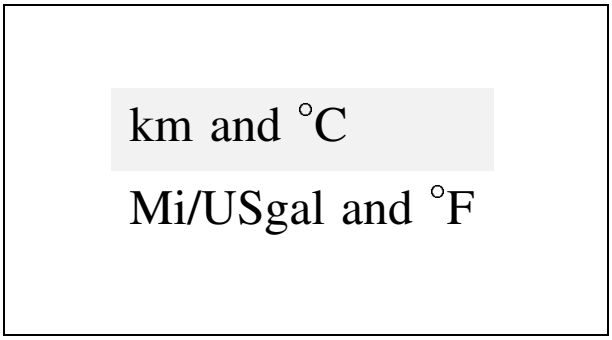

2 Confirm the choice with SELECT.

3 When *km and °C* are chosen, the following is shown on the graphic display (with the particular setting highlighted):

The up/down buttons move the cursor between the alternatives.

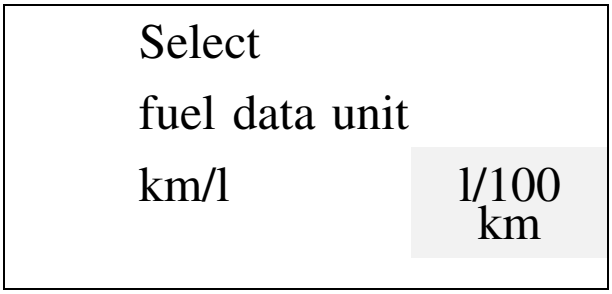

4 Confirm the choice with SELECT.

Cancel setting

Press Esc in order to cancel the setting.

https://truckmanualshub.com/

Clock format

MENU: Set-up mode, Clock format

1 Select the menu **Set-up mode, Clock format** and the following diagram is shown on the graphic display (with the particular setting highlighted):

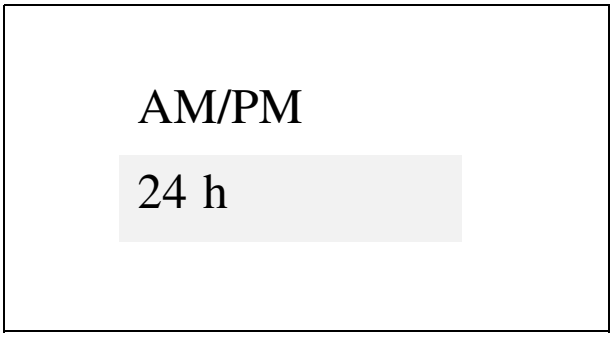

2 The up/down buttons move the cursor between the alternatives. Confirm the choice with SELECT.
AM/PM is the 12 hour display (AM = morning and PM = evening).

Cancel setting

Press Esc in order to cancel the setting.

Contrast

MENU: Set-up mode, Contrast

1 Select the menu **Contrast** and the following diagram is shown on the graphic display. The bar shows the particular setting in relation to max/min. contrast:

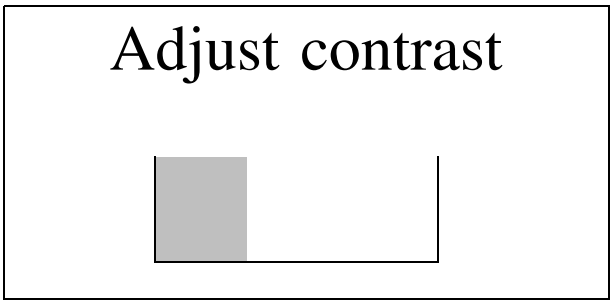

The up arrow increases the contrast.

The down arrow reduces the contrast.

2 Confirm the choice with SELECT.

Cancel setting

Press Esc in order to cancel the setting.

https://truckmanualshub.com/

Backlight

MENU: Set-up mode, Backlight

NOTE! This setting affects the display brightness when the headlights or parking lights are on. When the exterior lights are off, the brightness on the display is constant.

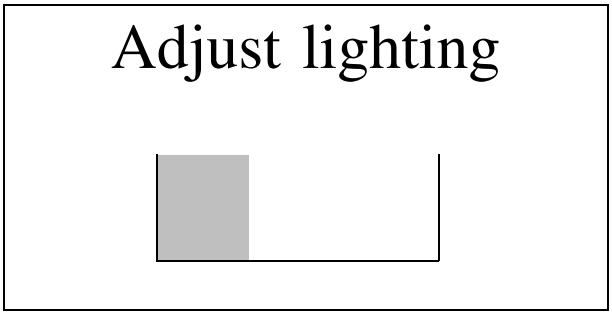

The graphic display brightness is controlled by the dimmer rheostat setting (which also controls the other instrument cluster lighting). In this menu, the display lighting can be altered in relation to the other instrument cluster lighting.

1 Select the menu **Backlight** and the following diagram is shown on the graphic display. The bar shows the particular setting in relation to max/min. lighting:

   the up arrow button increases the background lighting.

   the down arrow button reduces the background lighting.

2 Confirm the choice with SELECT.

   1 = off.

   2 = parking lamps.

   3 = high and low beam.

Cancel setting

Press Esc in order to cancel the setting.

https://truckmanualshub.com/

Night display

MENU: Set-up mode, Night display

1 Select the menu **Night display** and the following diagram is shown on the display:

Night display
Normal
Reverse

2 With the up/down buttons the setting switches between *Normal* and *Reverse*. With the setting *Normal* the text is dark and the background light. The setting *Reverse* makes the text light and the background dark. This setting only applies when the headlights or parking lights are on.

3 Confirm the choice with SELECT.

Cancel setting

Press Esc in order to cancel the setting.

https://truckmanualshub.com/

Main Menu: System Diagnostic

The menu System diagnostic has 3 sub-menus which are not protected by a password, and 1 sub-menu which is protected by a password.

- **Fault diagnostic**
- **Cluster self test**
- **Part number**

Password required:
(see page 158)

- **Status test**

Fault Diagnostic

MENU: Diagnostic, Fault diagnostic

A list of the vehicle's ECUs is shown in the menu **Fault diagnostic**. Each ECU is identified by a MID number (Message IDentifier). In addition a menu for resetting all the fault codes is shown.

For a list of common fault codes, see page 143.

- ABS Brakes, MID 136
- Instrument cluster center module, MID 140
- Info Display (instrument cluster graphic display), MID 234
- SRS Airbag, MID 232
- Cab controller (Vehicle ECU), MID 144
- Engine, MID 128
- Non specified system
- Reset all (password)

https://truckmanualshub.com/

1 The **up/down buttons** are used to move the cursor in the list.

2 SELECT confirms the selection of ECU or *Reset all*.

3 During the time that each respective ECU is being called, the display shows the text:

Data transfer
in progress
please wait

4 No faults in the chosen system:

Press Esc to return to the previous menu.

No errors

5 Not responding to *Non spec. system*:

Press Esc to return to the previous menu.

Non spec. syst
MID (127)
Not responding

6 If the chosen system does not respond within 5 seconds the following message is shown (in this example the engine has been called):

Engine
MID 128
Not responding

https://truckmanualshub.com/

Fault codes are shown

1 If there is a fault code or codes the following is shown, for example:

Line 1: Identification of ECU

Line 2: Identification of parameter/component

Line 3: Fault type identification

```
Engine
Coolant temperature
Value too high
Active        Σ 1  I  ↓
```

”Σ 1” shows how many times the fault has been registered since the last resetting. If no information is available for how many times the fault code has been registered, only *Active* is shown (the fault remains). Or alternatively *Inactive* is shown (the fault was there previously).

The arrow in the lower, right-hand corner is shown if there is more than one fault code. The up/down buttons move the cursor and the next fault code/message is shown. To reset codes, a password must be entered (see page 158).

2 If more than 20 fault codes/messages are available for the chosen ECU the 21st message will be:

```
Engine
Too many
error messages
```

To see those messages that are not shown, earlier messages must be reset (see above). The fault codes are presented in text format, but the user can also choose to have the fault codes presented numerically (if a fault code or ECU is not recognized by the system, they will only be presented in numeric format).

https://truckmanualshub.com/

Numeric or text

1 Press SELECT when there are fault codes and the following menu is shown. Select numeric or text format (the function *Reset* will only be shown when the correct password has been entered; see page 158):

Numeric

Text

Time stamp

Reset

2 When *Text* has been selected, the fault codes are shown according to step no. 1, page 139.

3 When *Numeric* has been selected the fault codes are shown with numbers:

MID 128

PID 110

FMI 0

Active Σ 1 I ↓

MID: Identification of ECU

PID: Identification of parameter

PPID: Volvo unique identification of parameter

SID: Identification of component

PSID: Volvo unique identification of component

FMI: Identification of fault type

”Σ 1” shows how many times the fault occurred since the last resetting. If there is no information available for how many times the fault code has been active, only *Active* is shown (the fault remains) or *Inactive* (the fault was there previously).

https://truckmanualshub.com/

The arrow in the lower, right-hand corner is shown if there is more than one fault code. The up/down buttons move the cursor and the next fault code is shown. If the correct password has been entered, resetting can be done in *Reset all*, last in the list. This resetting deletes only the fault codes for the chosen ECU.

4 If more than 20 fault codes/messages are available for the chosen ECU, the 21st message will be:

Too many

error messages

To see those messages that are not shown, earlier messages must be reset (password restricted, see page 158).

https://truckmanualshub.com/

Time stamp

1 To show the time when the fault code was set for the first and latest occasion respectively, press SELECT when the particular fault code is presented (does not apply to ABS brakes or SRS airbag). The following menu is shown:

Numeric
Text
Time stamp
Reset

2 Select *Time stamp* and the following text message is shown:

Data transfer
in progress
please wait

3 The following is shown (time stamp is presented as the number of hours the engine has been running):

Press Esc to return to the previous menu.

First
X
Last
X

4 If the transfer should fail, the following message is shown:

First
No data
Last
No data

https://truckmanualshub.com/

Common Fault Codes

MID Messages Supported (with text)	
MID code	**Description**
128	Engine
130	Transmission
136	ABS
140	Instrument
144	Cab Controller
232	SRS (Airbag)
Additional MID Messages (without text)	
137	Brakes, Trailer #1
138	Brakes, Trailer #2
138	Brakes, Trailer #3
141	Trip Recorder
162	Vehicle Navigation Unit
166	Tires, Power Unit
171	Driver Information Center
172	Off-board Diagnostics #1
179	Data Logging Computer
181	Communication Unit - Satellite
191	Vehicle Location Unit
231	Communications Unit - Satellite/GPS/Cellular

SRS SID	Description
1	Driver Airbag Ign. Loop

PID code	Description
62	Retarder inh status
71	Idle shutdown status
84	Road speed
91	% Throttle pedal
100	Engine oil pressure
102	Boost pressure
105	Air inlet temperature
106	Air inlet pressure
108	Barometric pressure
110	Engine coolant temperature
111	Coolant level
127	Transmission oil psi
160	Main shaft speed
161	Input shaft speed
175	Engine oil temperature
177	Transmission oil temperature
190	Engine speed
191	Transm. output RPM

PSID (Proprietary Subsystem ID)	
PSID Code	**Description**
PSID 1	Retarder Brake Control Set Switch
PSID 2	Idle Validation Switch #2
PSID 3	Idle Validation Switch #3
PSID 4	Retarder Brake Control Switch

https://truckmanualshub.com/

Common SID code	Description
233	Controller #2
236	Power contact device
237	Start enable solenoid
242	CC resume switch
243	CC set switch
244	CC enable switch
245	Clutch pedal switch
246	Brake pedal switch #1
247	Brake pedal switch #2
248	Proprietary data link
249	SAE J1922 data link
250	SAE J1708 data link
251	Power supply
252	Calibration module
253	Calibration memory
254	Controller #1

Engine SID code	Description
1	Injector #1
2	Injector #2
3	Injector #3
4	Injector #4
5	Injector #5
6	Injector #6
21	Engine position sensor
22	Timing sensor
25	Ext. engine protection sig.

Transm. SID code	Description
1	C1 solenoid valve
2	C2 solenoid valve
3	C3 solenoid valve
4	C4 solenoid valve
5	C5 solenoid valve
6	C6 solenoid valve
7	Lockup solenoid valve
16	Neutral start output
18	Shift selector #1
27	Lockup clutch PSI sw.
28	Forward range PSI sw.
29	Neutral range PSI sw.
30	Reverse range PSI sw.

Vehicle Navigation SID code	Description
1	Dead reckoning
2	LORAN receiver
3	Global positioning system (GPS)
4	Integrated navigation unit

https://truckmanualshub.com/

Brake SID code	Description
1	ABS snsr axle 1 L
2	ABS snsr axle 1 R
3	ABS snsr axle 2 L
4	ABS snsr axle 2 R
5	ABS snsr axle 3 L
6	ABS snsr axle 3 R
7	ABS valve axle 1 L
8	ABS valve axle 1 R
9	ABS valve axle 2 L
10	ABS valve axle 2 R
11	ABS valve axle 3 L
12	ABS valve axle 3 R
13	ABS rtrdr ctrl relay
14	ABS relay, diagonal 1
15	ABS relay, diagonal 2
18	ABS, dif 1 - ASR valve
19	ABS, dif 2 - ASR valve
22	Speed signal input
23	Warning light bulb
24	ASR light bulb

FMI code	Description
0	Data valid, but high
1	Data valid, but low
2	Data erratic
3	Voltage shorted high
4	Voltage shorted low
5	Current low or open C
6	Current high or short C
7	Mech syst no respons
8	Abnormal freq or PW
9	Abnormal update rate
10	Abnormal change rate
11	Failure unknown
12	Bad device
13	Out of calibration
14	Special instruction[1]

[1] This is displayed when the airbag has stored crash data or by the data concentrator when the engine shutdown output has been activated.

https://truckmanualshub.com/

PPID (Proprietary Parameter ID)	
PPID Code	**Description**
69	Buffered Idle Switch
70	Pedal Switches, Supply
71	Cruise Control and Retarder, Supply Switch
72	Accelerator Pedal and Retarder, Supply Sensors
73	Accelerator Control 2 and Primary Tank, Supply Sensors
75	Range Inhibitor, Status Solenoid Valve
76	Brake Lamps, Status Relay
77	Compressor, Status Solenoid Valve
78	Interval Wiper, Status Relay
79	Area Inhibitor, Status Solenoid Valve
86	Engine Brake Torque Percent
109	EPG3 Drive Stage Failure
121	MTE (Engine Compressor Control Output) Failure
122	VCB Engine Compression Brake
123	EPG2 Start and Warmhold
124	EPG1 Engine Brake
125	EOL Enable Failure
195	Proprietary Diagnostic Data Request/Clear Count
196	Proprietary Diagnostic Data/Count Clear Response

https://truckmanualshub.com/

Cluster Self Test

MENU: System diagnostics, cluster self test

Four sub-menus are available:

- **Bulb test**
- **Gauge test**
- **Display test**
- **Buzzer test**

Cancel Test

Press Esc in order to cancel the test.

Bulb Test

MENU: System diagnostic, Cluster self test, Bulb test

1 Select **Bulb test**.

2 The telltale lamps light up for approx. 5 seconds.

3 Esc cancels the test and the menu **Bulb test** is shown again.

Changing Bulbs

Changing the instrument cluster's telltale bulbs can be carried out from the rear side, without the instrument cluster needing to be opened. See page 95 for replacement information.

https://truckmanualshub.com/

Gauge test

MENU: System diagnostics, Cluster self test, Gauge test

1 Select **Gauge test**.

2 The pointers move back and forth a few times, between the end positions. They stop at the mid-point of the gauge before the test is complete, then return to zero. This is only a check that they can move (i.e. that the gauge functions).

3 Esc cancels the test and the menu **Gauge test** is shown again.

Display test

MENU: System diagnostic, Cluster self test, Display test

1 Select **Display test**.

2 The display goes out, lights up, goes out. In the odometer display, all segments are shown, then off, back on, off again, and back to the normal display.

3 Esc cancels the test and the menu **Display test** is shown again.

https://truckmanualshub.com/

Buzzer test

MENU: System diagnostic, Cluster self test, Buzzer test

1 Select **Buzzer test**.

2 On the display, the name of the current sound is shown at the same time as the sound is activated. With the up/down buttons you can switch between the different sounds.
Three different sounds (flasher indicator, reminder and caution) are tested for 10 seconds.

The caution sound is connected to the red ⚠STOP telltale.

3 Esc cancels the test and the menu **Buzzer test** is shown again.

https://truckmanualshub.com/

Part number

MENU: System diagnostics, Part number

A list of the vehicle's electronic control units (ECUs) is shown in the menu **Part number**. Each ECU is identified by a MID number (Message IDentifier).

- ABS Brakes, MID 136
- Instrument cluster center module, MID 140
- Display, MID 234
- SRS Airbag, MID 232
- Vehicle ECU, MID 144
- Engine, MID 128

1 The **up/down buttons** are used to move the cursor in the list.

2 SELECT confirms the selection of an ECU.

3 In the meantime, the display shows the text:

Data transfer
in progress
please wait

4 The following text is presented:

SW: The software part number

MID 128 SW ID
03163028P01

https://truckmanualshub.com/

5 The **up/down buttons** are used to move the cursor in the list.

HW: ECU part number

MID 128 HW ID

VOLVO08192949P06

6 If there is a communication error, the following is shown *No data* (this example shows HW ID, but same text applies to SW ID except that HW is replaced by SW):

MID 128 HW ID

No data

https://truckmanualshub.com/

Main Menu: Data Log Mode (Volvo Engine Only)

Menu **Data log mode** has 4 sub-menus where 3 are not protected by passwords and 1 is protected by a password.

- **Vehicle ID**
- **Totals**
- **Trip data**

Password required:
(see page 158)

- **Reset trip data**

Vehicle ID

MENU: Data log mode, Vehicle ID

1 Select the menu **Data log mode, Vehicle ID** and the following text message is shown:

Data transfer
in progress
please wait

2 The fleet ID that is shown has been entered in the menu.

Press Esc to return to the previous menu.

Fleet ID:
XXX
Chassis no:
XXX

3 If the transfer should fail, the following message is shown:

Operation
failed

https://truckmanualshub.com/

Totals

MENU: Data log mode, Totals

1 Select the menu **Data log mode, Totals**.

2 The menus that show **Totals** can be scrolled to using the up/down buttons.

Total distance
406.7 mi

NOTE! If *km and °C* has been selected, the consumption is shown in liters.

Total fuel used
51.3 gal

Total engine hours
7.3 h

Total idle time
0.3 h

https://truckmanualshub.com/

Total PTO
hours
0.5 h

Total engine revolutions
1 220 100 r

3 If the transfer should fail, the following message is shown:

Operation
failed

Cancel operation

Press Esc in order to cancel the operation.

https://truckmanualshub.com/

Trip data (Volvo engine only)

MENU: Data log mode, Trip data

1 Select the menu **Data log mode, Trip**.

2 The information below can be scrolled to using the up/down buttons.

Trip distance

203.5 mi

NOTE! If *Miles and °F* has been selected, the consumption is shown in US gallons.

Trip fuel

Avg. 28 l/100 km

Acc. 57.0 gal

Trip overrevs

0.8 h

Trip uneconomy rev's

0.4 h

https://truckmanualshub.com/

NOTE! If *km and °C* has been selected, the consumption is shown in liters.

Trip fuel
uneconomy rev's
8.5 gal

Trip average speed
67.4 km/h

Trip overspeed
0.2 h

Trip engine hours
3.0 h

Trip idle time
0.4 h

NOTE! If *km and °C* has been selected, the consumption is shown in liters.

Trip idle fuel
2.5 gal

Trip PTO hours
1.3 h

https://truckmanualshub.com/

NOTE! If *km and °C* has been selected, the consumption is shown in liters.

Trip PTO fuel

20.4 gal

Trip cruise

2.5 h

4 If the transfer should fail, the following message is shown:

Operation

failed

Cancel operation

Press Esc in order to cancel the operation.

https://truckmanualshub.com/

Main Menu: Password Input

Certain functions are password protected and there are two password levels for the display (it is also possible to select not to protect functions with password, which can be done by a Volvo Truck dealer):

1 Workshop password

2 Owner password

The two passwords give the user access to all password protected functions, with one exception:
The workshop password does **not** give access to the password configuration, i.e. it is not possible to change the Owner password or the Workshop password with it.

The following menus are protected by password:

- Default language
- Fleet limit: r/min
- Fleet limit: speed
- Fleet fuel target
- Amperemeter calibration
- Fleet ID
- Reset (applicable for several functions)
- Status test
- Password config.

When the start key has been in stop position for more than 60 seconds, or if the batteries have been disconnected, the password must be entered again.

The password protected menus are described in the Service Manual "*Instrument, VN, 2/99*." Order information can be found on page 341.

https://truckmanualshub.com/

Main Menu: Gauge

When the menu **GAUGE** has been selected, you switch between the various sub-menus with the up/down buttons.

- TEMPERATURE, ENGINE OIL
- TEMPERATURE, TRANSMISSION OIL (Option)
- VOLTMETER

Temperature, engine oil

MENU: GAUGE, TEMPERATURE ENGINE OIL

The engine oil temperature is shown as in the diagram.

If the sensor data for **Temperature, engine oil** is not available, the symbol is shown as well as the text NO DATA.

Information message

Yellow ⚠INFO telltale

If the engine oil temperature becomes too high, an information message is shown automatically with the text HIGH. At the same time the yellow ⚠INFO telltale under the display lights up. Esc acknowledges the info message.

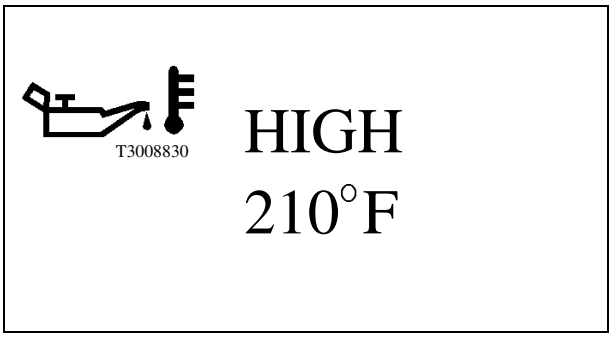

T3008860

https://truckmanualshub.com/

Temperature, transmission oil (option)

MENU: GAUGE, TEMPERATURE, TRANSMISSION OIL

The transmission oil temperature is shown as in the diagram.

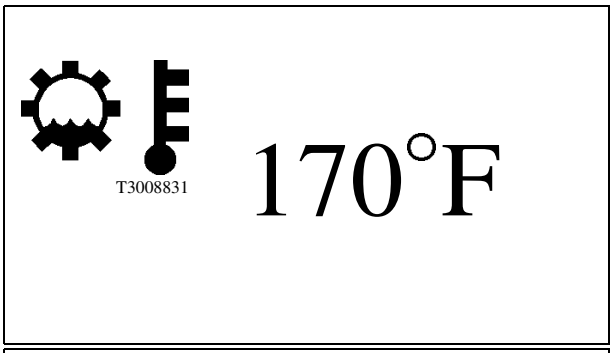

NOTE! The temperature display starts showing only at approximately 150°F (65°C).

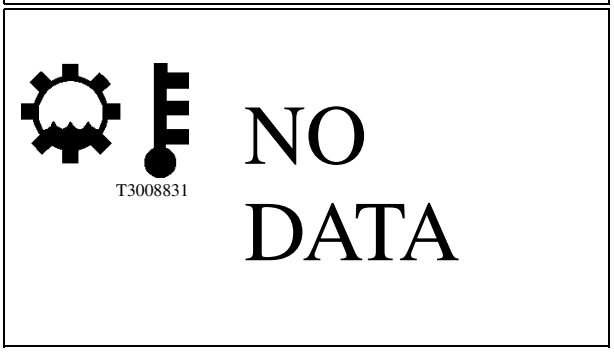

If the sensor data for **Transmission oil temperature** is not available, the symbol is shown as well as the text NO DATA.

Information message

Yellow ΔINFO lamp

If the temperature of the transmission oil becomes too high, an information message is shown automatically with the text HIGH. At the same time the yellow ΔINFO telltale under the display lights up. Esc acknowledges the information message.

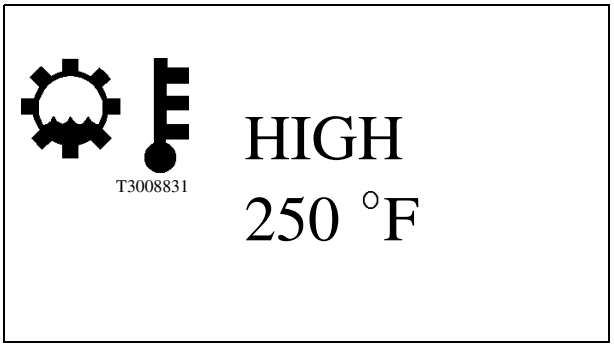

For HIGH to display with the ΔINFO telltale, the transmission oil temperature must be 210°F (100°C) for 30 minutes, or 250°F (120°C) for 10 minutes.

T3008860

https://truckmanualshub.com/

Stop message

Red ⚠STOP telltale

If the temperature of the transmission oil becomes too high, a flashing stop message is shown automatically with the text TOO HIGH. At the same time the red ⚠STOP telltale under the display lights up and the warning signal sounds. Esc acknowledges the stop message.

For TOO HIGH to display with the ⚠STOP telltale, the transmission oil temperature must be 285°F (140°C) for 30 seconds.

T3008831

T3008861

https://truckmanualshub.com/

Voltmeter

MENU: GAUGE, VOLTMETER

The battery/charging voltage is shown as in the diagram. If the battery/charging voltage becomes too low (below 9.5 V), the instrument cluster will lose power.

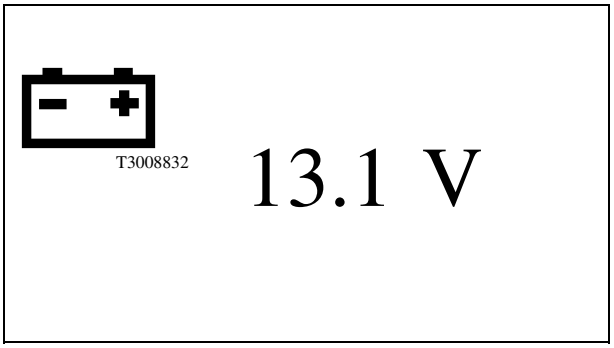

Information message

Yellow ⚠INFO telltale

If the battery/charging voltage becomes too high, the voltmeter's value is shown automatically as well as the text TOO HIGH. At the same time the yellow ⚠INFO telltale under the display lights up.

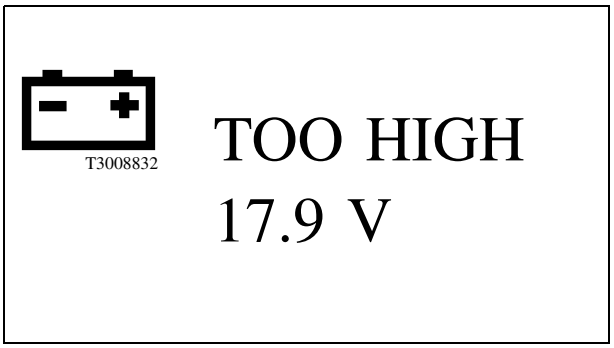

T3008860

https://truckmanualshub.com/

Main Menu: Fuel Economy (option)

Menu **FUEL ECONOMY** has 2 sub-menus:

- **AVG/INST**
- **LEG FUEL**

FUEL ECONOMY is chosen and then the up/down buttons are used in order to change between the available sub-menus.

AVG/INST Fuel Economy

MENU: FUEL ECONOMY, AVG/INST

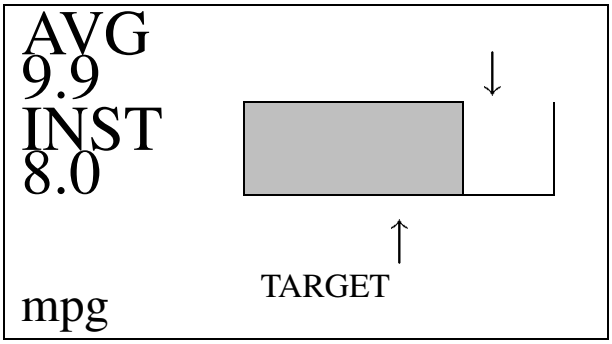

For setting metric or English value displays, see page 132.

The following is shown on the display:

- Average trip fuel consumption (AVG): The value is presented numerically and as an arrow above the bar. The arrow's position shows the value. For a short time after resetting, the following is shown "— — — " instead of the average fuel consumption.
- Instantaneous fuel consumption (INST): The value is presented numerically as well as in the form of a bar.
- Target trip fuel consumption (TARGET): The value is presented as an arrow under the bar. The arrow's position shows the value. This value is password protected, see page 158.

NOTE! When idling, the bar is not shown and the fuel consumption is shown in gal/hour.

NOTE! If *km and °C* have been selected the consumption is shown in liters. In the example above, L/100 km will then be shown instead of mpg.

https://truckmanualshub.com/

Reset fuel economy

1 Press SELECT in the menu **AVG/INST**.

2 A new text message in the form of a question is shown:
RESET FUEL DATA? Press SELECT to reset.

When the leg's fuel consumption is reset, the average fuel consumption will also be reset.

RESET

FUEL DATA?

PRESS SELECT FOR 1S

Leg Fuel

MENU: FUEL ECONOMY, LEG FUEL

Press the up/down buttons in the menu **AVG/INST** to reach the menu **LEG FUEL**.

The following is shown in the menu **LEG FUEL** on the display:

- The Leg fuel consumption (amount of fuel used since the last resetting).
- Empty XXX mi (where XXX is the calculated range using the present instantaneous consumption).

NOTE! If *km and °C* have been selected, the consumption is shown in liters. In the example below, L will then be shown instead of USgal.

NOTE! Since the "calculated range" is based on the instantaneous consumption, the correct value is first shown shortly after start.

LEG FUEL

XXX

EMPTY XXX mi

https://truckmanualshub.com/

Main Menu: Time/Distance

Menu **TIME/DIST** has 4 sub-menus.

- **CLOCK**
- **ALARM CLOCK**
- **TRIPMETER**
- **AVERAGE SPEED**

NOTE! Menu **TIME/DIST** is available even when the ignition key is in the off position. It is activated by keeping one of the control buttons on the wiper stalk pressed down for at least 1 second. The menu remains active for 30 seconds after the last depressing of the button.

The alarm clock cannot be set while driving, but the buzzer which sounds for the alarm call can be switched off, see page 168.

Clock

MENU: TIME/DIST, CLOCK

Shows the current time. To set the time format 12h or 24h, see page 134.

Setting

1 To set the clock, press SELECT when you are in the menu **TIME/DISTANCE** and the clock function will be shown.

2 Set the hours with the up/down buttons. Confirm the choice with SELECT.

3 Set the first digit in the minutes with the up/down buttons. Confirm the choice with SELECT.

https://truckmanualshub.com/

4 Set the second digit in the minutes with the up/down buttons. Confirm the choice with SELECT.

5 Set the AM/PM (if the time format is 12h) with the up/down buttons. Confirm the choice with SELECT.

Cancel setting

When setting hours, Esc cancels the setting and the time is shown according to the previous setting.

Pressing Esc after setting the minutes or after setting the AM/PM, moves the cursor back to the previous selection.

Ignition key in the off position

When the ignition key is in the OFF position, if setting the clock takes more than 30 seconds between pushing the buttons, the time which has been entered then applies.

https://truckmanualshub.com/

Alarm clock

MENU: TIME/DIST, ALARM CLOCK

Setting the alarm clock:

ALARM	08:30	AM
CLOCK	08:00	AM
ON	OFF	SET

1 To set the alarm clock, press SELECT when the menu **ALARM CLOCK** is shown in the menu **TIME/DIST**.

2 Move the cursor to SET using the up/down buttons. Press SELECT.

If the speed during the setting exceeds 5 mph (8km/h), the function is cancelled and the graphic display returns to the last active display in the ON position.

3 Set the hours with the up/down buttons. Confirm the choice with SELECT.

4 Set the first digit in the minutes with the up/down buttons. Confirm the choice with SELECT.

5 Set the second digit in the minutes with the up/down buttons. Confirm the choice with SELECT.

6 Set the AM/PM (if the format is 12h) with the up/down buttons. Confirm the choice with SELECT.

7 Move the cursor to ON using the up/down buttons. Press SELECT. A symbol is shown on the right in the graphic display window's status bar in order to highlight that the alarm clock is activated.

8 Esc moves the highlight to the previous number or selection, if there are any, otherwise the setting is cancelled.

https://truckmanualshub.com/

Ignition key in the off position

When the ignition key is in the OFF position, if setting the alarm clock takes more than 30 seconds, the time which has been entered then applies.

Switch off the alarm clock

When the alarm clock goes off, the word ALARM flashes, the current time is shown and a warning signal sounds. The alarm is switched off after 60 seconds or when the up, down, Esc or SELECT control button is pressed.

Activate alarm clock (without changing the time of the alarm call)

1 The cursor is moved with the up/down buttons to ON.

2 SELECT activates the alarm clock and the symbol is shown on the graphic display.

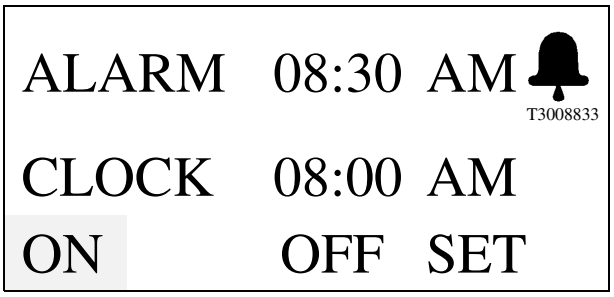

Cancel setting

Press Esc in order to cancel the setting.

De-activate the alarm clock

1 The cursor is moved with the up/down buttons to OFF.

2 SELECT switches off the alarm clock and the symbol disappears from the graphic display.

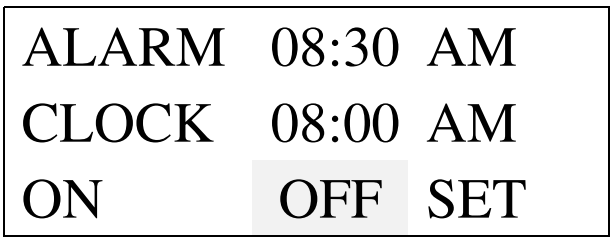

Cancel setting

Press Esc in order to cancel the setting.

https://truckmanualshub.com/

Tripmeter

MENU: TIME/DIST, TRIPMETER

On the display in the menu **TRIPMETER** the distance driven for Leg 1 and Leg 2 are shown.

TRIP
#1 43.6 mi
#2 507.3 mi

Reset tripmeter

1 Press SELECT in the menu **TRIPMETER**.

2 A new text message with a question about the resetting of the tripmeter is shown. The up/down buttons move the cursor between Leg 1 and Leg 2. Confirm the choice with SELECT or press Esc in order to cancel the resetting.

RESET?
#1: #2:
PRESS SELECT FOR 1S

Average speed

MENU: TIME/DIST, AVERAGE SPEED

The average speed is calculated using the distance driven divided by the time the engine has been running (since the last resetting).

AVERAGE
SPEED
55.4 mph

Reset average speed

1 Press SELECT when the menu **AVERAGE SPEED** is shown.

2 A new text message with a question about the resetting of the average speed is shown. Confirm the choice with SELECT or press Esc in order to cancel the resetting.

RESET?
PRESS SELECT FOR 1S

https://truckmanualshub.com/

Main Menu: FAULTS?

General

When a fault occurs a fault message is shown on the graphic display. There are two types of fault messages:

1 Information messages

2 Stop messages

The stop message is always more urgent than information messages.

Any information and stop messages as well as the associated symbols are shown automatically on the graphic display when driving. A summary of these symbols is shown in the illustration under page 172. Under the display there are two lamps (a yellow ⚠INFO telltale and a red ⚠STOP telltale) that attract the driver's attention when necessary. When the red (stop) telltale lights up and the engine is running, a warning signal is also activated.

Several messages may be active at the same time. When a new message is activated the new one is shown instead of the old one.

A down arrow in the graphic display's right-hand corner means that more messages are active.

https://truckmanualshub.com/

Information message

T3008860

The yellow telltale lights up when an abnormal state or a risk situation is indicated. In addition to the telltale, a symbol or text is shown on the graphic display at the same time. For certain symbols, a measurement value is also shown.

NOTE! In the event of a warning for low air pressure no message is shown on the graphic display, the LED in the gauge lights up instead (together with the master warning telltale [see page 84]).

Important! When the ⚠INFO telltale lights up, the specified fault must be checked at the next stop.

Stop message

⚠ DANGER

Failure to take necessary action when the ⚠STOP telltale is on can ultimately result in automatic engine shutdown and loss of power steering assist. Vehicle crash resulting in personal injury or death can occur. Bring the vehicle to a safe stop where the problem can be checked.

T3008861

In the event of serious faults, the red ⚠STOP telltale lights up and a warning buzzer sounds (if the engine is running). In addition to the telltale, a symbol or text is shown on the graphic display at the same time. For certain symbols, a measurement value is also shown.

NOTE! In the event of a warning for low oil pressure or coolant temperature in the engine no text is shown on the display — the LED in the respective gauge lights up instead.

https://truckmanualshub.com/

Information symbols

The yellow ⚠INFO telltale lights up and a symbol is shown on the graphic display:

Airbag

T3008842

For airbag (SRS system) information, see page 63.

Overheating, instruments

T3008840

The symbol will be shown when the temperature in the instrument cluster exceeds 198°F (92°C). The instrument lighting becomes weaker and the gauges show the minimum reading. When the cab temperature cools the instrument cluster functions will gradually be restored.

Level, washer fluid

T3008838

The washer fluid symbol lights when the washer fluid is low.

Warning, transmission oil temperature

T3008831

If the temperature of the transmission oil becomes too high, an information message is shown automatically with the text HIGH. It comes on when the transmission oil is 250°F (120°C) or over for more than 10 minutes, or 210°F (100°C) or over for more than 30 minutes. The temperature is displayed along with the symbol.

Warning, voltmeter

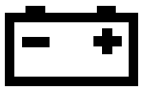
T3008832

If the battery voltage becomes too high the voltmeter's value is shown automatically as well as the text TOO HIGH. This warning is triggered at 17 V. The voltage is displayed along with the symbol.

https://truckmanualshub.com/

Warning, temperature engine oil

If the engine oil temperature becomes too high, a stop message is shown automatically with the text TOO HIGH. The engine output is reduced. The temperature limit which activates this warning varies for different engines. This limit is set in the engine ECU.

T3008830

Air filter, clogged

The symbol is shown when the air filter sensor is restricted.

T3008843

Too cold for engine brake (VEB) (Volvo engine only)

Position 2 on the switch must not be engaged before the engine has reached operational temperature. If position 2 is engaged and the engine is too cold, this symbol is shown and a signal sounds when engine braking is carried out (However, VEB is not engaged).

T3009913

Fault in the preheating

T3008841

https://truckmanualshub.com/

General

Three levels of the cab climate systems are available. They can be identified by the appearance of the control panel.

The basic system is a heater and defroster unit only. The heater unit has a rating of at least 40,000 Btu.

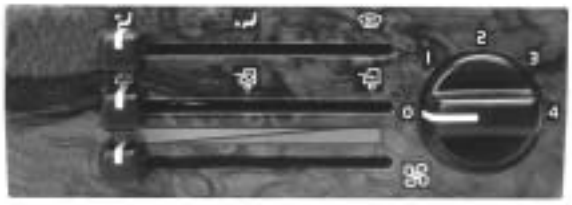

W8001116

The manually operated heating and air conditioning unit is controlled from the same panel as the heater system, with the addition of a switch for turning the air conditioning system on (button with the snowflake symbol).

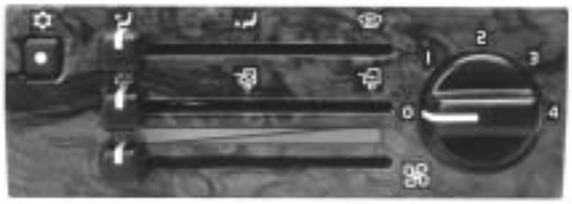

W8001003

A variant of the air conditioning system can be added as an option. This is called the Automatic Temperature Control (ATC) variant. It is identified with the switch marked **aut**. It allows all functions of the previous systems, plus the ability to maintain the temperature in the cab as set by the driver. The desired temperature is selected by the combination of the temperature control setting and the fan speed.

W8001004

The air conditioning only operates when the engine is running. Best performance from the air conditioning is achieved when all windows and vents are closed. At all times, make sure the cowl fresh air intake is free from snow, ice, leaves, etc.

NOTE! The air conditioning system is continuously monitored for correct function. The monitor module has a read-out for fault codes. See page 194 for more information.

DANGER

Do not attempt to drive with the windshield covered by mist, fog or frost. The visibility is reduced, which could lead to an accident causing severe personal injury or death.

https://truckmanualshub.com/

Climate Unit Main Control Panel

Fan Speed Control

W8001466

The fan has four speeds and can also be shut off. With the fan control in the 0 position, air still flows out of the dash vents if the vehicle is moving at highway speeds and if the Fresh Air Control is set for outside air intake. If the Fresh Air Control is set for full recirculation, the fan has to be on for air to flow out the dash vents.

If equipped with air conditioning, the fan is not controlled by the system to change fan speed with changing temperatures. Adjust the fan speed to the desired air flow.

Fan speed must be selected to meet either heating or cooling needs. For the heater only and manual air conditioning variants of the climate system, settings of temperature and air flow must be adjusted as often as necessary to accommodate changing temperatures outside and inside the cab.

The ATC system is designed to maintain a constant temperature in the cab, which is set by the temperature control. As the system does not make automatic changes of fan speed, a selection of higher or lower fan speed to allow for more or less air flow may have to be made to achieve the correct temperature.

https://truckmanualshub.com/

Air Distribution Control

The air distribution control is used to direct the air flow to either the dash vents, floor vents or defroster vents. The lever has detentes in the outer and middle positions so that it can be set without looking at the panel.

W8001467

The air flow for the three major settings are described below. Any setting outside of the detented positions will be a mix of the air flows that depends on how far from the detented position the lever is.

With the control in the leftmost position, all air is directed out through the vents in the dash.

With the control in the middle position, most air is directed out through the floor vents and the cab door window vents. A small flow is directed out through the vents in the dash. This mix is approximately 80/20.

With the control in the rightmost position, most air is directed out through the front dash vents to the windshield and cab door windows. A small flow is directed out through the vents in the dash. This mix is approximately 70/30.

NOTE! When the air vents on the dash are open, some air always flow through them. To have maximum air flow to the floor or to the windshield and cab door windows, close the dash vents.

https://truckmanualshub.com/

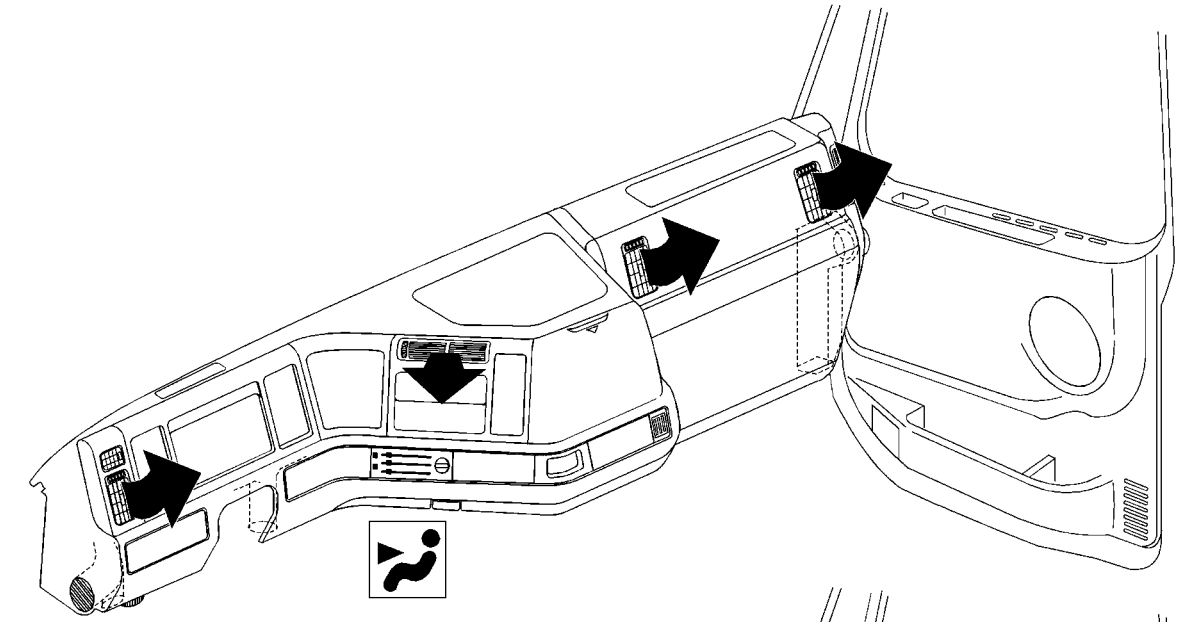

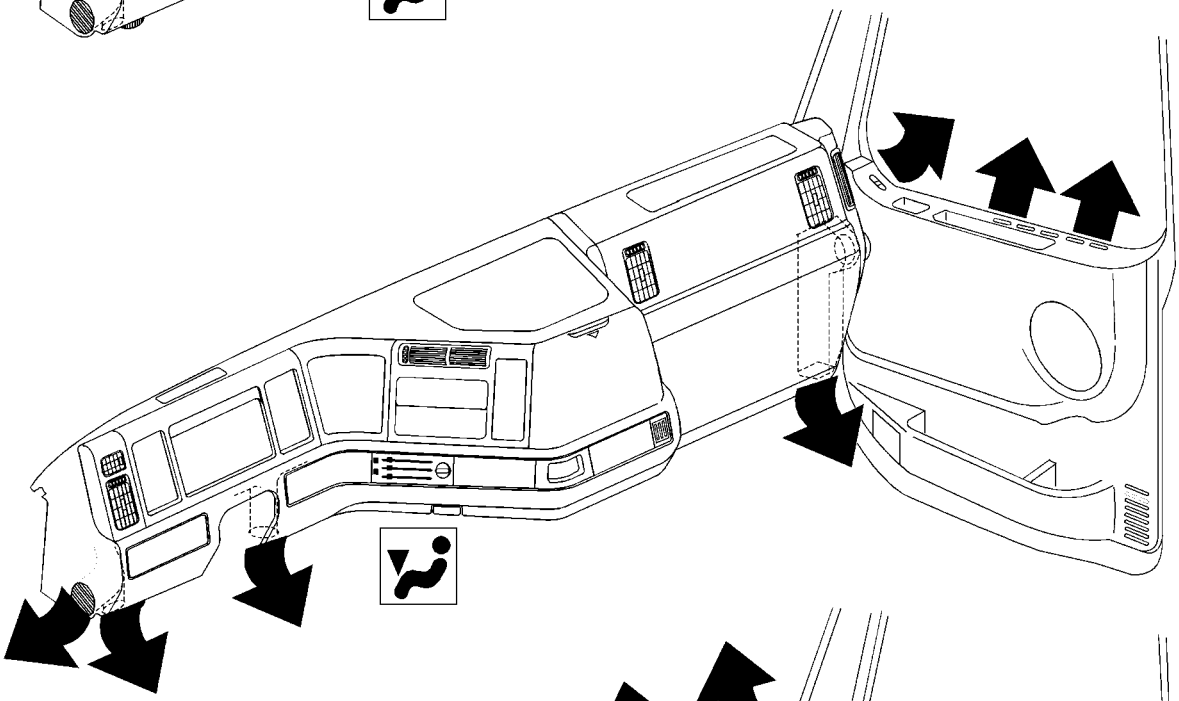

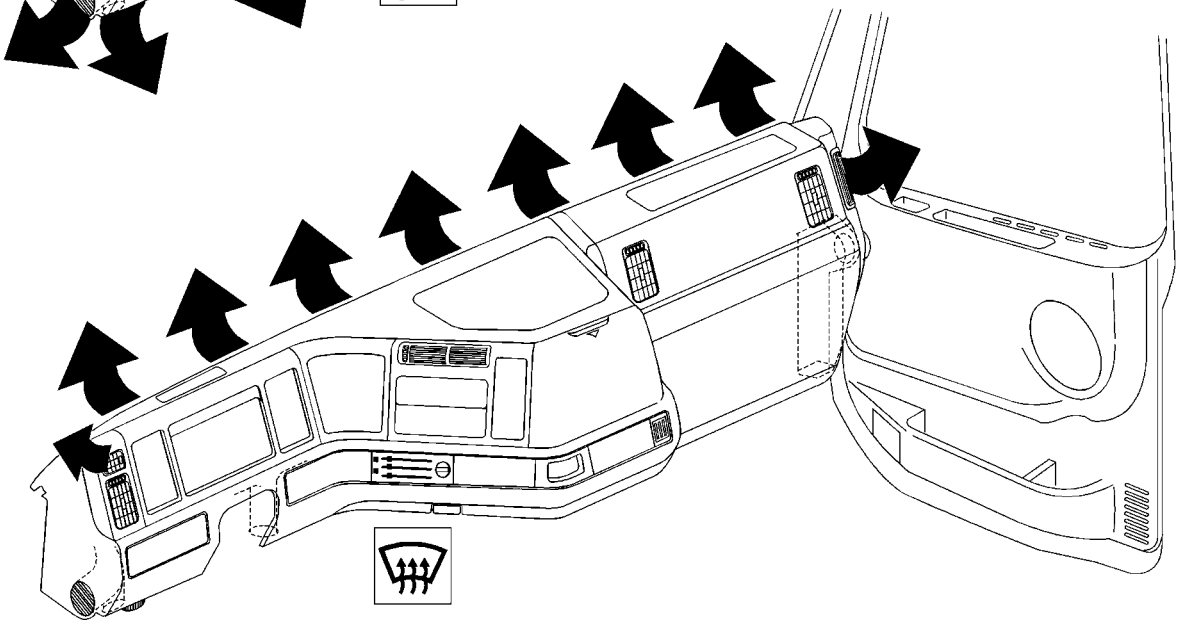

W8001078

https://truckmanualshub.com/

Fresh Air Control

The top slide lever is the Fresh Air/Recirculation Control. The settings can be anywhere from full fresh air intake to only recirculated air. Settings can be chosen anywhere in between to give the desired flow of air.

W8001468

In the leftmost position, the fresh air inlet is closed. All air is recirculated within the cab. It can be used to heat up or cool down cab temperature quickly or to close intake from letting in odors, etc. with the intake air.

In the middle position, there will be a 20% addition of fresh air to the 80% of recirculated air. This position is well suited for use when the air conditioning is engaged so a minimum of warm or cooled air is lost through the evacuation vents, while fresh air is still added to the cab.

In the rightmost position, the fresh air inlet is completely open. This is best used when heat is required (wintertime) and when defrosting or de-icing.

https://truckmanualshub.com/

Temperature Control

W8001469

The bottom slide lever is the Temperature Control which operates the coolant control valve. In the leftmost position the flow of coolant is shut off by the control valve, which means no heat from the climate unit. The heat will increase the further to the right the control is moved.

The temperature control should be used as a thermostat, together with the fan speed, to “dial” in the desired temperature when using the air conditioning. The desired temperature is selected by the combination of the temperature control setting and the fan speed. For the ATC version, the temperature is automatically maintained to where the control was set. If needed, the control can be moved to a new setting without turning the ATC off.

Using the heater on days when the outside temperature is low but there is direct sunlight heating through the windows, the air distribution control should be set in the center position (air directed to the floor) and the air vents open, and at the same time, the temperature control should be set around the middle position. Warm air is then distributed so that it is warmest at the floor and cooler air is distributed via the air vents on the dash.

When the temperature control is set in one of the end positions, the temperature at the floor vents and the air vents is the same.

https://truckmanualshub.com/

A/C Control

When the vehicle is equipped with air conditioning, the control panel has a button for engaging the air conditioning compressor. This button is marked with a snowflake symbol. When the A/C is engaged, the green LED light in the button is on.

W8001470

When the air conditioning button is pressed, the fan speed control must be set on 1 through 4 for the air conditioning to start. If the air conditioning button is pressed when the fan speed control is set on 0, the air conditioning will not start.

To set the air conditioning temperature, adjust the temperature control and fan speed until the desired temperature/air flow has been reached. If the cab temperature needs adjusting, the temperature or fan speed has to be adjusted again until the new desired temperature has been reached.

https://truckmanualshub.com/

A/C Automatic Control

When the vehicle is equipped with Automatic Temperature Control (ATC), the control panel has a button, marked with **aut**, for engaging the electronic control unit. When ATC is engaged, the green LED light in the button is on.

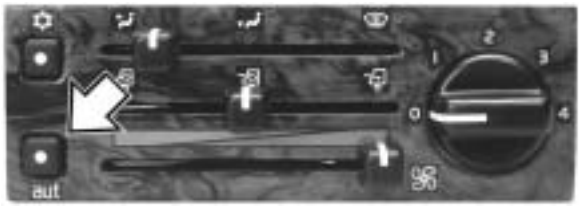

W8001471

The ATC air conditioning works with the coolant control valve as a “thermostat,” making automatic adjustments with input from sensors for air output and for air inside of the cab. However, the fan speed may also have to be adjusted, increasing or decreasing air flow, to achieve correct cab temperature.

To use the ATC, let the system run in the manual mode until the cab temperature has stabilized at a desirable temperature. Then press the **aut** button to engage the automatic control unit. To set a new desired temperature, simply slide the temperature control to a higher or lower setting and the system will maintain this new temperature within the ability of the temperature control.

NOTE! Changing from manual to ATC control or the other way, makes the air output temperature change 5 to 10 degrees. A small correction to the temperature control is needed after the change has been made.

https://truckmanualshub.com/

Air Vents

A Closed

B Open

C Lateral Air Flow

D Vertical Air Flow

When heating the cab, all vents should be closed. However, the vents on the outer parts of the dash can be used for defrosting the cab door windows. When operating the air conditioning, all air vents should be completely open and the air flow directed upward.

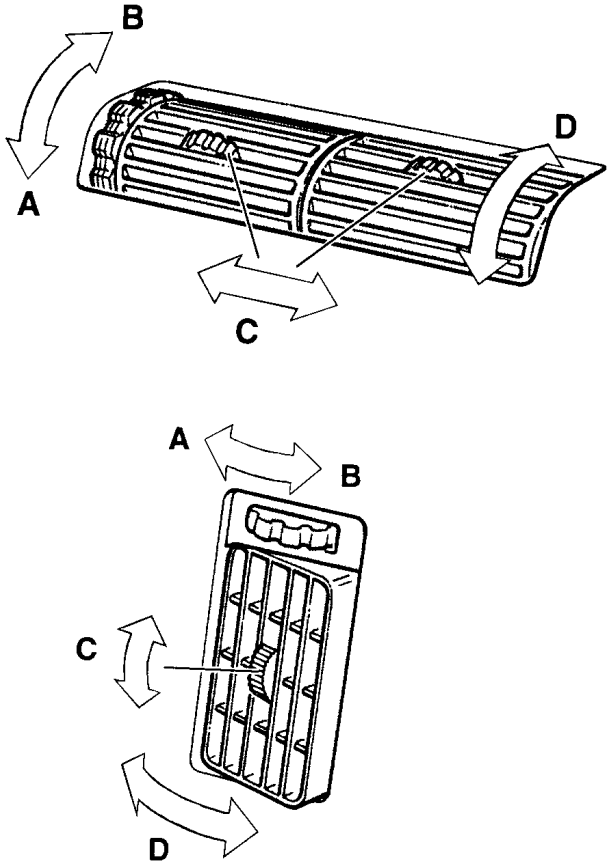

W8001150

https://truckmanualshub.com/

Sleeper Climate Unit

General

The sleeper cabs have an optional A/C and heater unit that is located in the passenger side luggage compartment. The sleeper unit operates from the same heater and air conditioning supply as the main unit. The heater can be operated independently from the main unit as long as the engine is running. For the air conditioning to operate, the engine must be running, the air conditioning button must be pressed in and the fan control must be set at least for speed 1 on the main control panel.

W8002333

Air is taken from the sleeper area through a filter in the lower bunk support wall and heated or cooled in the underbunk unit. Outlet air can be directed with the vents in the side walls (the illustration shows the sleeper vent layout of the VN-770).

For the best results when using the air conditioning, direct the air flow upward in the sleeper area.

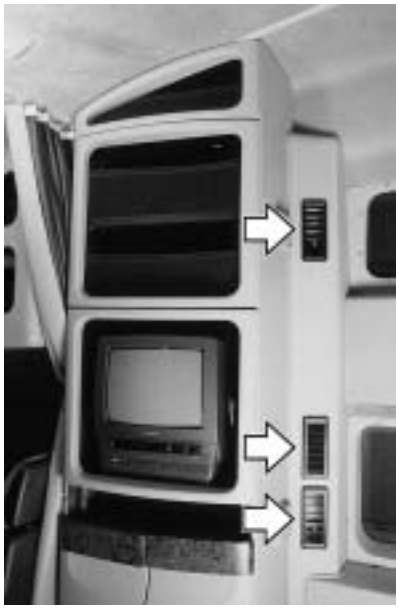

W8002033

https://truckmanualshub.com/

Sleeper Climate Unit With ATC

The ATC panel is located on the left side, behind the driver seat and contains a temperature control, fan speed control and other controls.

To use the heater, with the engine running and the air conditioning button on the main control panel in the off position, turn the fan speed control (1) and the temperature control (2) to the positions that give the desired temperature output.

To use the air conditioning, the engine must be running. Press in either the manual air conditioning button (with manual A/C, the fan switch must be at least on speed 1) or the ATC button on the main control panel in the dash. The ATC control unit for the sleeper climate system will keep the temperature output to where the temperature control was set. However, the fan speed may also have to be adjusted, increasing or decreasing air flow, to achieve correct cab temperature.

The air conditioning works together with the heater to give the desired temperature output. Use the temperature control (2) to adjust the output air temperature by turning the control counterclockwise (toward the blue field) for colder air and clockwise (toward the red field) for less cold air. Also use the fan speed control (1) to alter the amount of air flow.

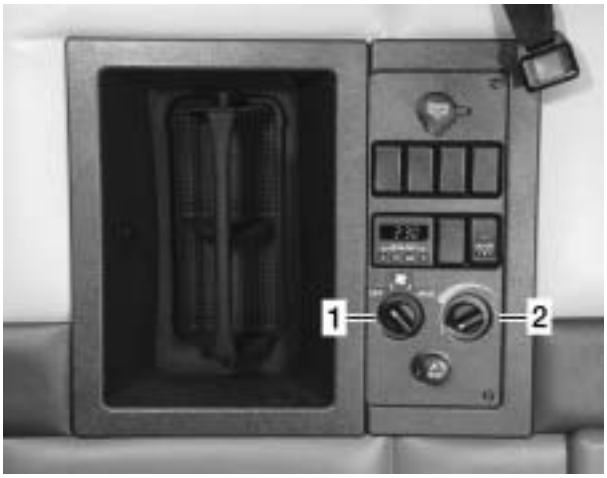

W8002038

Panel in VN-420, 610 and 660

W8002014

Panel in VN-770

https://truckmanualshub.com/

Cab Ventilation

In sleeper versions (except the VN-770) there is a fresh air vent located on each cab side wall. It opens to two positions so the air flow can be regulated.

The vent also opens toward the front or toward the rear. This can be used for forcing air into the cab (open toward the front) or for venting air out of the cab (open toward the rear).

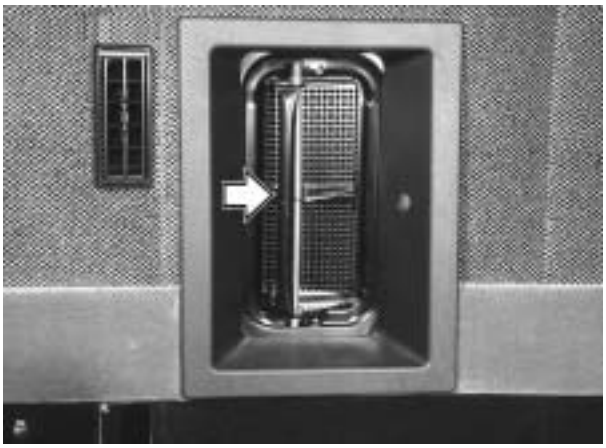

W8001146

CAUTION

The vent should not be used during rain, while washing the vehicle or other circumstances where water may enter the cab while the vent is open. To prevent leaks, make sure the handle rollers are on the top center part of the cams.

The VN-770 is equipped with 4 hinged side windows in the sleeper area. The VN-660 has only the upper windows. Do not force the window crank mechanism in the fully open position. The mechanism can be damaged if you try to open the window beyond the stop position.

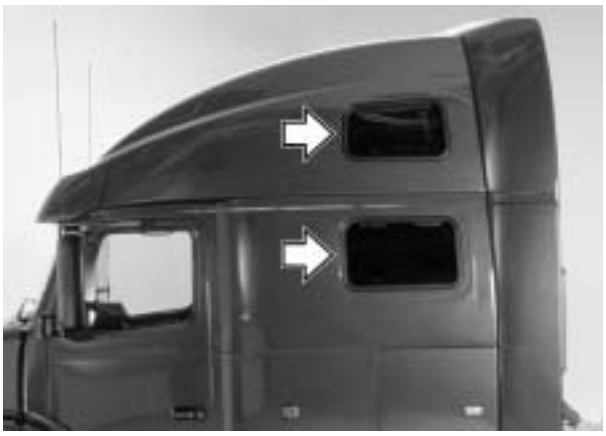

W8001473

CAUTION

Make sure windows are closed before washing the cab. Water can enter the cab through the window opening.

https://truckmanualshub.com/

Ventilation Guidelines

If at any time there is any doubt that exhaust fumes are entering the cab, have the cause of the fumes determined and corrected as soon as possible. If the vehicle must be driven under these conditions, drive only with all windows open.

Protect against carbon monoxide entry into the cab. Keep the engine exhaust system, cab and cab ventilation system properly maintained. It is recommended that the exhaust system and cab are inspected by a competent technician:

- At every engine oil change.
- Whenever a change is noticed in the sound of the exhaust system.
- Whenever the exhaust system, underbody or cab is damaged.

DANGER

Do not breathe the engine exhaust gas. It contains carbon monoxide, which has no color or odor. Carbon monoxide is a dangerous gas which can cause unconsciousness or death.

DANGER

Diesel engine exhaust and some of its constituents are known to the state of California to cause cancer, birth defects or other reproductive harm.

To allow for proper operation of the vehicle ventilation system, keep the inlet grille at the base of the windshield clear of snow, ice, leaves and other obstructions at all times.

Do not park the vehicle and let the engine run or idle for more than 10 minutes with the ventilation system control switch in the *off* position. Even with the ventilation system on, running the engine while parked or stopped for long periods of time is not recommended. Entry of carbon monoxide into the cab is possible with a poorly repaired, damaged or corroded exhaust system or cab.

Do not run the engine in confined areas, such as garages or next to a building, any more than necessary. The area must be properly ventilated. When the vehicle must be stopped with the engine running for more than a few minutes:

- Adjust the heating or cooling system to force outside air into the cab. Do this by setting the fan to medium or high speed and with the controls set in any position except for recirculation of air inside of the cab.
- Keep the exhaust pipe area clear to help reduce the buildup of exhaust gas under the vehicle.

https://truckmanualshub.com/

Cab Air Filters

Air going into the cab passes a filter located on the right, front side of the cab. Remove the filter and clean with an air gun (no more than 20 psi pressure) after 40,000 miles (64,000 km), (in dusty conditions as often as every 10,000 miles [16,000 km]). Make sure the air stream is directed from the inside out.

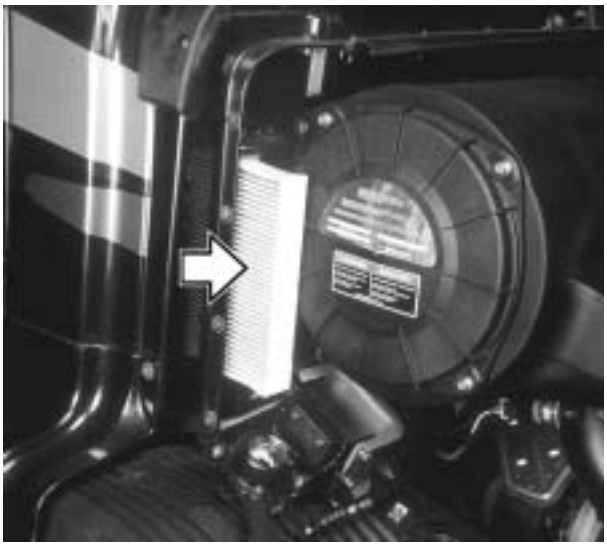

W8002474

The filter should not be cleaned and reused more than once. Replace with a new filter after maximum 70,000 miles (110,000 km), or earlier if driving in dusty conditions. A clogged filter decreases the efficiency of the air conditioning system.

If the vehicle is equipped with a sleeper heater-A/C, there is a filter for the recirculating air. This is located behind the passenger seat on the bunk support. The filter should be checked and cleaned after 40,000 miles (64,000 km), (in dusty conditions as often as every 10,000 miles [16,000 km]). Clean as the cab air filter. Replace filter after 100,000 miles (160,000 km).

W8002473

To inspect or to change the filter, open luggage storage lid and pull out filter.

https://truckmanualshub.com/

Parking Heater (optional)

DANGER

Do not fuel the vehicle or handle flammable liquids in the vicinity of an operating parking heater. The fuel vapors can be ignited, causing an explosion or fire resulting in severe personal injury or death.

DANGER

Do not store flammable items close to the parking heater or put items on top of it. Flammable items should not be closer than 2 inches (50 mm). The item may ignite and cause a fire resulting in severe personal injury or death.

DANGER

Do not run heater while vehicle is in an enclosed area. The exhaust gasses contain carbon monoxide (CO). If not vented to the atmosphere, there could be a buildup of dangerous levels of CO which may lead to unconsciousness and later death.

WARNING

The parking heater is a very hot object. Do not touch the heater when it is in operation or shortly thereafter. Touching a heater may cause burns to exposed skin.

CAUTION

The heater air cab inlet is located in the bunk wall in front of the heater. Do not attempt to put small items or store flat items between the bunk and the cabinet/refrigerator. The air intake can be blocked which causes the heater to overheat and shut down.

The parking heater is a diesel fuel burner that heats the air in the cab. Air is taken from the cab and returned heated up. Combustion air and exhaust is taken from and released to the outside air.

To safeguard from the heater operating after a turnover accident, there is a fuel shut-off valve in the fuel delivery system.

https://truckmanualshub.com/

General

A fuel heated parking heater is available as an option. It is located in the left hand luggage compartment. The heater provides automatically regulated heat that is distributed through its own vents into the sleeper section of the cab.

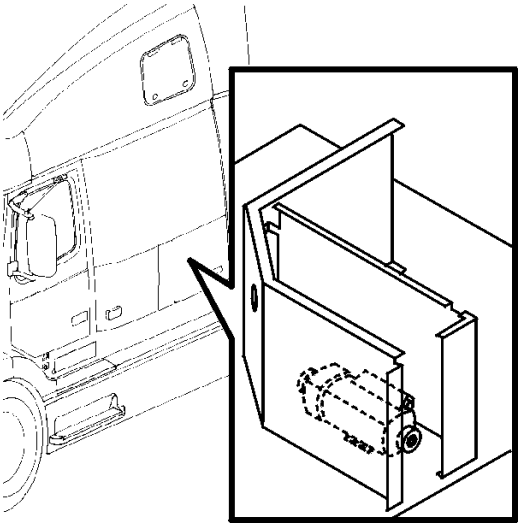

W8002480

Timer/Clock

The heater is operated by a combined timer for the heater and a clock with built in alarm. See page 225 for information to set the clock and alarm.

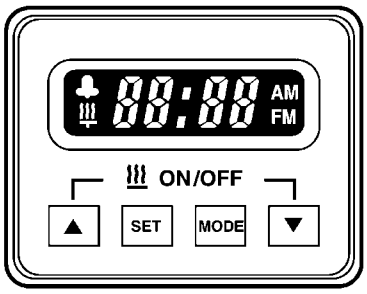

T8007012

Thermostat

To be able to regulate the temperature in the sleeper while the parking heater is operating, there is a thermostat for setting the desired temperature. It is located in the sleeper panel, close to the timer/clock.

The thermostat control range is between 54 to 83°F (12 to 28°C).

The green indicator lamp lights up only when the heater is operating.

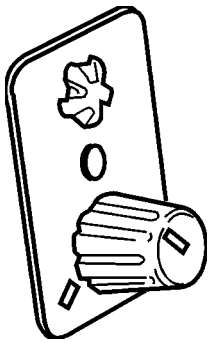

W8002015

https://truckmanualshub.com/

Timer/Clock Modes

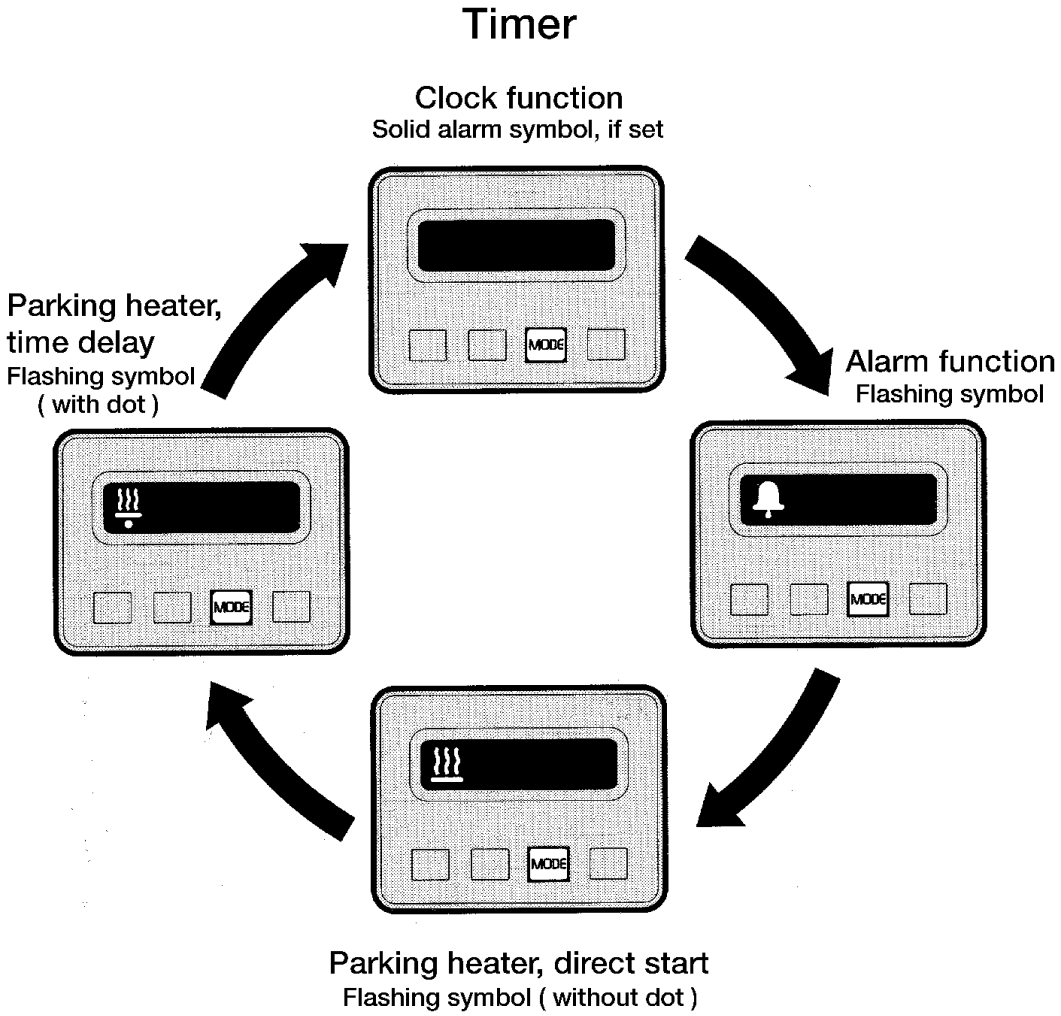

The timer/clock has four modes that can be accessed by pressing the MODE button. The modes are arranged in a continuous loop. To access the next mode, press the MODE button until the correct function appears in the window.

Display Mode Symbols

The three symbols illustrated below can be shown on the display.

Symbol showing that the alarm function is selected. See page 225 for information to operate clock/alarm.

Symbol shows that the parking heater is on. See page 191 for information on direct and rapid start.

Symbol shows that the time delay start of the parking heater is on. See page 191 for information to set start with time delay.

https://truckmanualshub.com/

Rapid Start/Stop Of the Parking Heater

To use the rapid start/stop function of the timer, there is no need to access the correct function by the MODE button. This operation works independently of the timer operation.

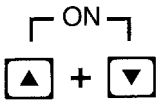

To start the parking heater manually, press in both the up and the down buttons at the same time for at least 3 seconds.
The heater will now run for 8 hours and then it switches off automatically.

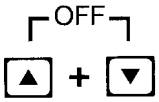

To stop the parking heater manually, press in both the up and the down buttons at the same time for at least 3 seconds.

Parking Heater Direct Start, With Set Operating Time

Symbol for direct start of parking heater. The symbol flashes until the function is changed.

To select the function to start the parking heater, use the "MODE" button to switch between functions until the direct start symbol appears.

Press the SET button. The hour digits start to flash.

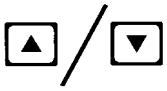

Press the up button to set the number of hour the parking heater should operate. Only complete hours or 0 - 59 minutes can be set. The letter h appears after the indicated hour digit.

Accept the indicated time by pressing SET. The display will show ON, meaning that the heater is ready to be started.

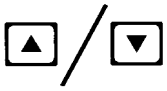

If the heater is not to be started, press one of the up or down buttons and OFF is now displayed. To alternate between ON and OFF, press the up or down button.

Accept that the heater is to be ON or OFF by pressing SET. The heater will start and run for the set time if ON was chosen or stand by if OFF was chosen. At the same time as the SET button is pressed, the display returns to the clock function.

If the time setting was not completed, the display returns to the clock function 30 seconds after the last button was pressed.

https://truckmanualshub.com/

Parking Heater Delayed Start

Symbol for delayed start of parking heater. The symbol flashes until the function is changed.

To select the function to start the parking heater, use the "MODE" button to switch between functions until the delayed start symbol appears.

Press the SET button. The hour digits start to flash.

Set the hour digits to the time when it is desired that the heater should start. The up button increases the time delay and the down button decreases the time delay.

Accept the delay hours by pressing the SET button.

Set the minute digits the same way as the hour digits were set.

Accept the delay minutes by pressing the SET button. The display will change to ON. This means that the heater is ready to start when the set time has been reached.

If the heater is not to be started with the time delay, press one of the up or down buttons and OFF is now displayed. To alternate between ON and OFF, press the up or down button, which means that the time delay for the heater is engaged or disengaged.

Accept that the heater starts at the set time. At the same time as the button is pressed, the display returns to the clock function.

If the time setting was not completed, the display returns to the clock function 30 seconds after the last button was pressed.

https://truckmanualshub.com/

Heater Shut-Downs

- If the heater does not start within two 60 second start attempts, a "no start" shut-down occurs.
- If a flameout occurs after the heater has started, the heater will attempt to restart. If repeated flameouts occur within 10 minutes, the heater will not restart.
- Overheat shut-down will occur if there is a restriction of the heating air flow (that is: blocked inlet or outlet). The automatic overheat switch will reset once the heater has cooled down.
- The blower motor is checked on start-up and every 4 minutes. Shut-down will occur if the blower does not start or maintain proper speed.

If any of these events should occur, the unit should be checked out by a qualified heater technician or contact the manufacturer.

https://truckmanualshub.com/

A/C Diagnostic Module

Problem Codes

The diagnostic module has two LED lights (one green and one red) which indicate if a system problem has been detected. If a problem is detected, a fault code or "blink" code is activated to identify the condition. The blink codes listed on the label are:

Slow Green	Normal
Fast Green	Low system voltage
1 Red Blink	Loss of refrigerant
2 Red Blinks	Overcharge, blockage or fan failure
3 Red Blinks	Open or shorted clutch or circuit
4 Red Blinks	Open pressure switch or circuit

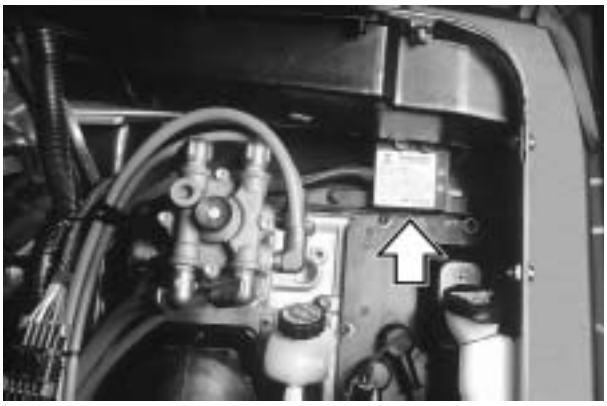

W3002004

DANGER

The air conditioning system is under pressure. The possibility of an explosion is possible if serviced incorrectly. A qualified technician should perform any service needed. Failure to follow this may lead to an explosion causing severe injury or death.

https://truckmanualshub.com/

General

Several different seats can be used in the vehicles. If the seat installed in the vehicle is not explained in this section, look for the seat manufacturer's manual in the Owner's Package.

On the driver's side there is a standard seat and an upgrade that includes adjustable air cushions for lumbar and thigh-back support, arm rests and a frame cover. The top of the line is a Volvo comfort seat.

The passenger side can have the same type of seat as on the driver's side and also a fixed seat. Each of the seats are described on the pages that follow.

DANGER

All adjustments are to be made while the operator is seated and the vehicle is stationary. **Do not** adjust the seat position while driving the vehicle. Failure to follow this warning can result in loss of vehicle control, which can result in serious personal injury or death in the event of a crash.

Before adjusting or fastening the seat belt, move the seat forward or rearward and adjust the seat height as necessary. Sit erect and adjust the seat cushion and seat back to obtain a comfortable driving position.

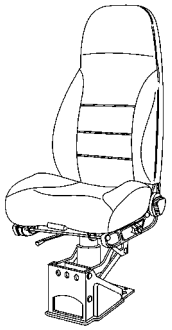

W8002743

National Standard Seat

W8002742

National Comfort Seat

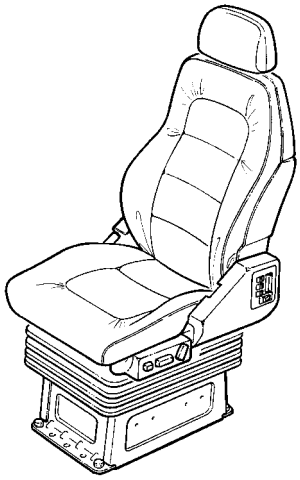

T8006503

Volvo Comfort Seat

https://truckmanualshub.com/

National Standard Seat Adjustments

1 Backrest tilt: By rotating the round handle, the backrest recline angle can be adjusted within 12 degrees.

2 Cushion front tilt and length: Pulling the handle up and out adjusts the tilt and length of the seat cushion.

NOTE! Support body weight with your feet while adjusting.

3 Fore and aft movement: Press the lever sideways to unlock the seat. Move seat fore or aft to a new position.

4 Ride height adjustment: Push the upper part of the switch up to increase ride height. Push the lower part of the switch to deflate the airbag and lower the ride height.

5 Lumbar support adjustment: Push the upper part of the switch to inflate the support for a firmer support. Push the lower part of the switch to deflate the support.

6 Cushion rear tilt: Rotate the lever to get different height positions.

NOTE! Support body weight with your feet while adjusting.

7 Chugger snubber: Moving the handle down isolates the seat from the fore and aft movement of the cab.

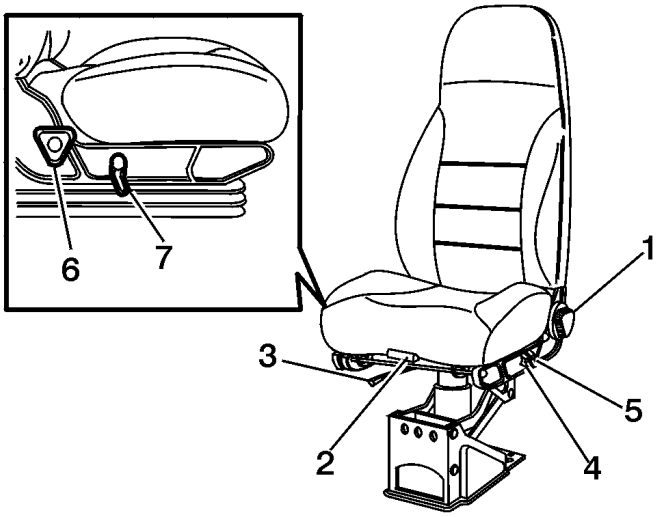

W8002745

https://truckmanualshub.com/

National Comfort Seat Adjustments

8 Lumbar support adjustment: Push the upper part of the switch to inflate the lower part of the 3–chamber support. Push the lower part to deflate it.

9 Lumbar support adjustment: Push the upper part of the switch to inflate the middle part of the 3–chamber support. Push the lower part to deflate it.

10 Lumbar support adjustment: Push the upper part of the switch to inflate the upper part of the 3–chamber support. Push the lower part to deflate it.

11 Back rest side support: Push the upper part of the switch to inflate the support. Push the lower part to deflate it.

12 Seat cushion side support: Push the upper part of the switch to inflate the support. Push the lower part to deflate it.

13 Front seat cushion adjustment: Push the switch up or down to choose height position.

14 Armrest angle adjustment: Ratcheting armrest. Set to desired angle.

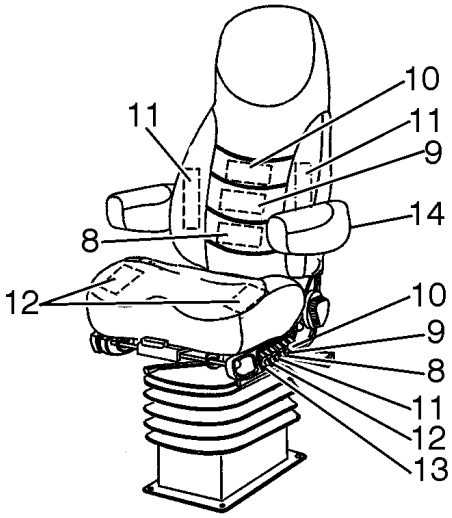

W8002744

https://truckmanualshub.com/

Volvo Standard Seat Adjustments

1 Fore and aft movement: Press the control down to unlock the seat cushion. Move seat cushion fore or aft to a new position.

2 Cushion front tilt: Push the control down and adjust the tilt of the seat cushion.

3 Ride height adjustment: Push or pull the control to change ride height.

4 Lift the lever up to adjust the top part of the seat back.

5 Push the lever down to adjust the whole backrest.

6 The lumbar support is adjusted by turning the knob clockwise for firming and counterclockwise for slackening the support.

7 The angle of the armrest is adjusted with the dial control on the underside of the armrest.

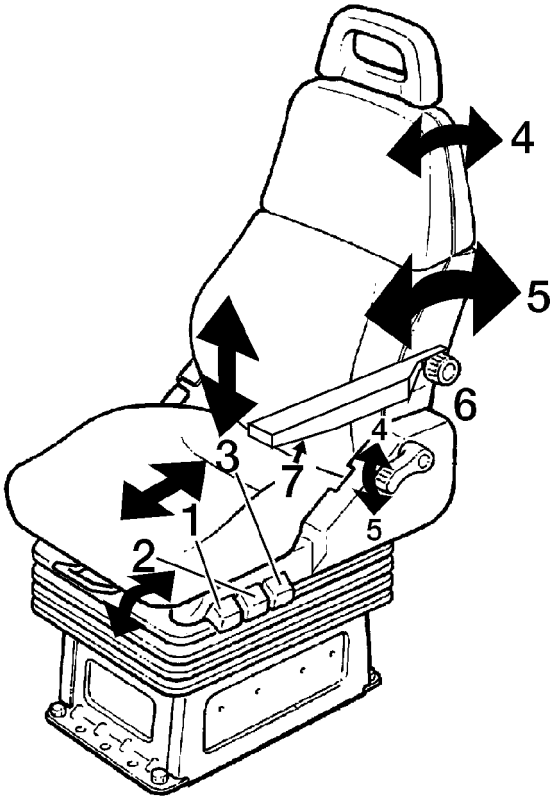

W8002387

https://truckmanualshub.com/

Volvo Comfort Seat Adjustments

WARNING

When the vehicle is equipped with an electrically operated seat, it is recommended that the ignition key is removed when leaving the vehicle to avoid the risk of crush injury should an unauthorized person operate the control buttons. Failure to do so can result in personal injury.

Seat and Seat Cushion

The whole seat position fore and aft is adjusted with control 1. Push the control button forward or backward. The total seat adjustment movement is approximately 7.5 in. (190 mm).

The seat cushion position in relation to the back rest (2) is adjusted with control 2. Push the control button forward or backward. The total cushion adjustment movement is approximately 3.0 in. (75 mm).

The seat cushion front tilt is adjusted with control 3. Press or lift the front part of the control to lower or raise the cushion front.

The whole seat height is adjusted with control 4. Lift or press the rear part of the control to raise or lower the seat.

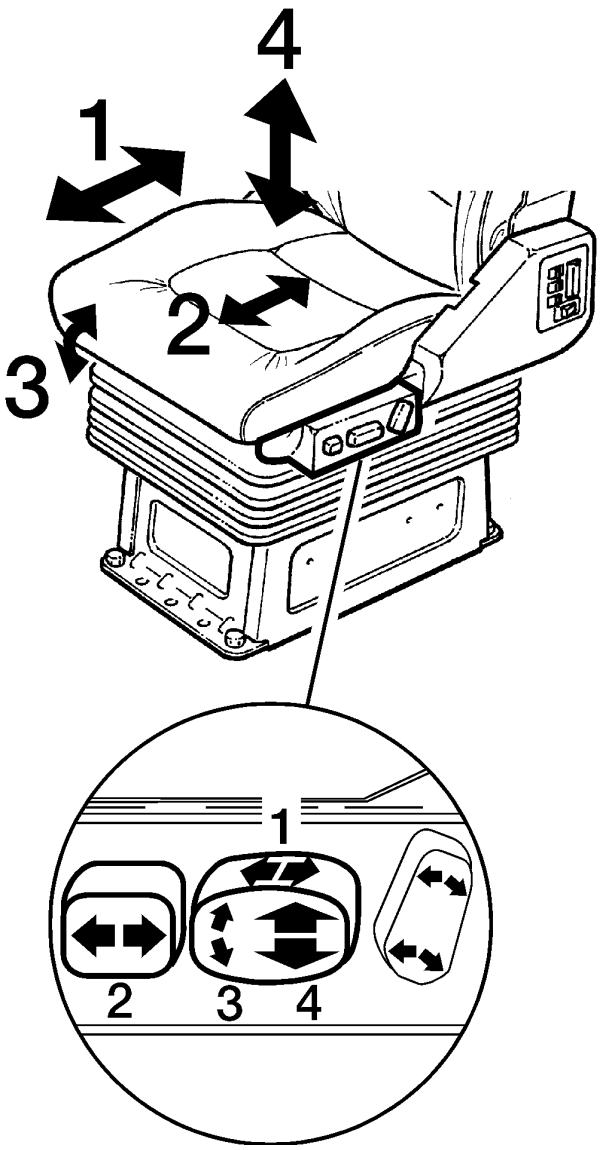

W8001831

https://truckmanualshub.com/

All the seat cushions are easily removed. Grab the edge of the cushion (not by the plastic base) and pull up or out.

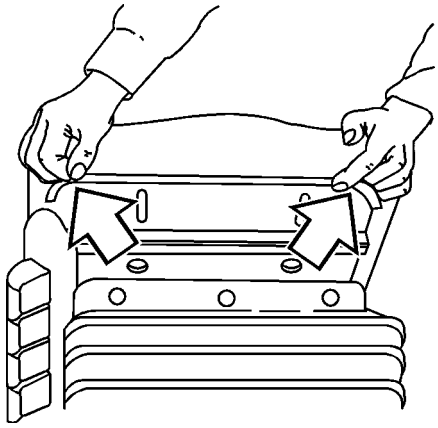

W8001915

Back Rest

The whole back rest angle is adjusted with control 5. Push the bottom part of the button forward or backward. The back rest can be adjusted through 15 degrees of movement.

The upper back rest angle is adjusted with control 6. Push the top part of the button forward or backward. The upper back rest can be adjusted through 15 degrees of movement.

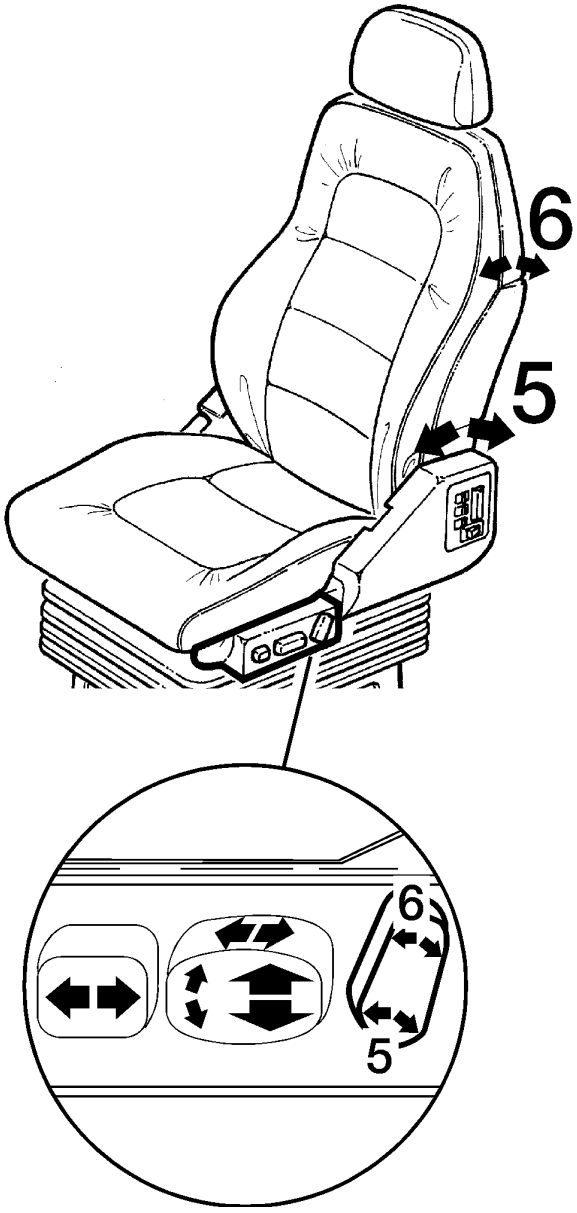

W8001830

https://truckmanualshub.com/

Back Rest Support

In the middle of the back rest there are three inflatable cushions (1, 2 and 3) that supports the lumbar region of the back. Each cushion is controlled by an individual control. Move each control, 1, 2 or 3, forward to inflate or rearward to deflate the respective cushion.

On the sides of the back rest there are cushions (4) for the side support of the back. Both cushions are controlled by control 4. Move the control forward to inflate or rearward to deflate cushions.

Seat Heater

There are two heater elements (5) in the seat. One in the seat cushion and one in the lower part of the back rest. They are operated by the switch 5 on the side panel.

The elements are regulated by internal thermostats and will therefore hold a steady temperature.

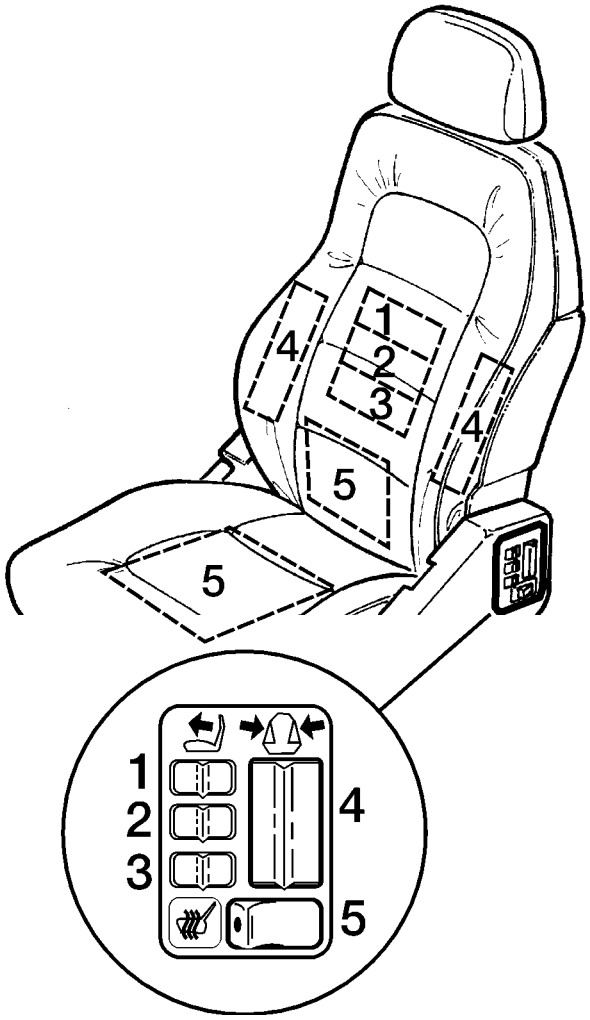

W8001829

https://truckmanualshub.com/

National Stationary Seat

For the passenger side, there is the option of a stationary seat. The base of the seat is a storage box that is accessed by lifting the seat cushion up.

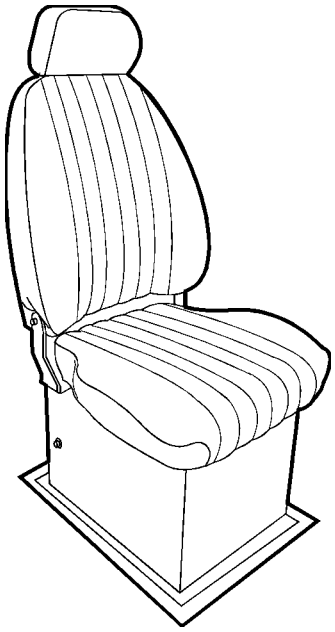

W8001386

No Passenger Seat (option)

DANGER

Using a temporary passenger seating without the benefit of proper seat mounting and safety belt can, in the event of a loss of control of the vehicle, cause serious personal injury or death.

In vehicles with no passenger seat installed. Do not let a passenger ride on temporary seating. This is against the law and can be very dangerous.

https://truckmanualshub.com/

Interior/Reading Lights

Front Of Cab

The cab is equipped with separate and combined interior and reading lights in various locations in the cab. The front seat overhead lights can be turned on at any time using the switch in the fixture. By turning the switch the other way, the light will be activated by the cab door switches. Any time the door is opened, the light comes on. When the switch is in the middle position, the light does not light up even when the door is opened.

W3003981

There is also a light on the inner front face of the door that can be activated by the switch or be set to come on when the door opens. The lens is red so the light is used to alert oncoming traffic from the rear that the door is open. It is also used during night driving to light up the floor area and steps without distracting the operator with a glaring light.

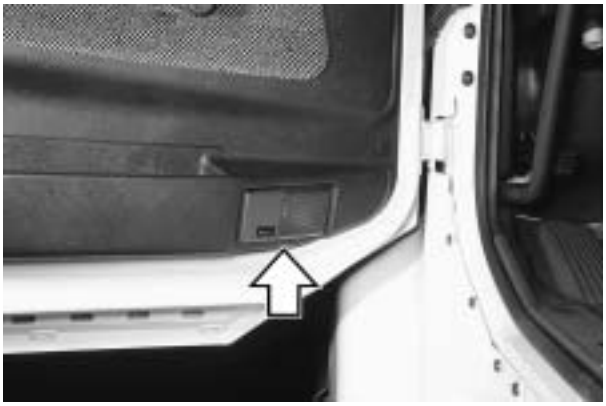

W3000974

The door switch operates all door-activated lights. The switch is located in the rear part of the door frame.

The switch has a shut off function that can be used if the door needs to be open and the lights should not be on. To deactivate the lights, grasp the stem of the switch with two fingers, push it in and twist clockwise. The stem stays in and the light is off. When the switch stem is pushed in and released, either by hand or by the door, it will return to the normal working position.

W3000970

https://truckmanualshub.com/

Sleeper Section

The sleeper section has individual bunk light fixtures for all types of sleeper cabs. They are of the same type as the front overhead lights. They are operated by the switch on the fixture.

There are overhead fluorescent lights in the VN-610, VN-660, and VN–770.

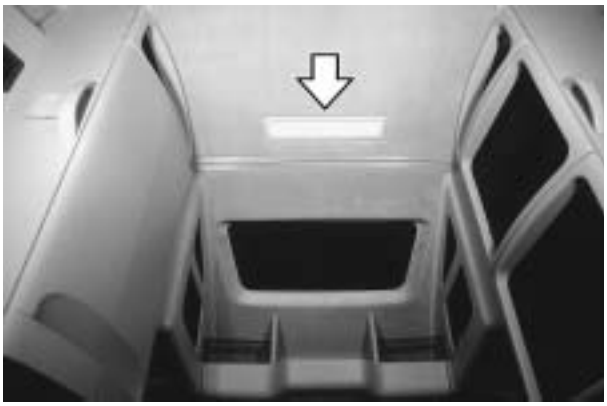

W3002425

The fluorescent overhead lights can be operated from the sleeper panel switch.

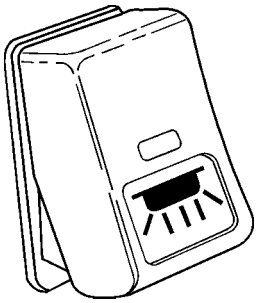

W3001351

For the VN-770 model, there is also a switch for the overhead fluorescent light in the left hand switch cluster on the dash. This switch can be reached from outside the cab door to enable the light to be turned on without having to climb into the cab.

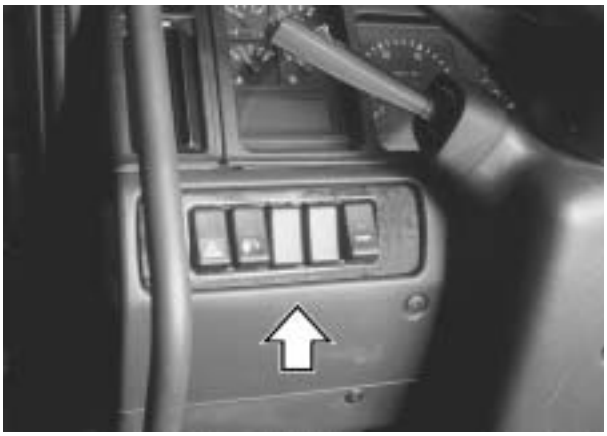

W3002002

https://truckmanualshub.com/

There is a separate fluorescent light over the table in the VN-770, and an incandescent light over the table in the VN-660. There is a switch in the sleeper panel on the driver side wall.

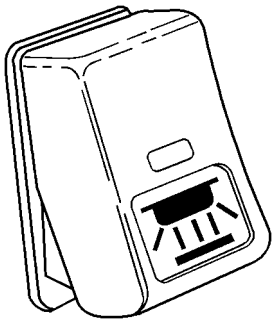

W3002332

A sleeper panel light is provided for the VN-770 model. The light is located in the upper part of the panel and is operated by a switch located on the panel.

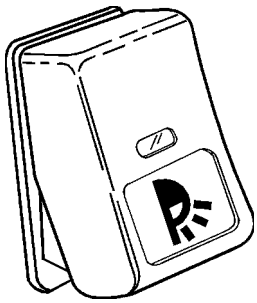

W3002334

https://truckmanualshub.com/

Storage Compartments

DANGER

Heavy objects must be stored only in the outside storage areas or secured on the floor. Cabinets and storage compartments are designed for clothing and lighter personal effects only. In the event of a collision, heavy, unsecured objects in overhead storage can come loose and cause severe personal injury or death to the driver or passengers.

WARNING

All items within the cab must be secured before the vehicle is set in motion. This includes, but is not limited to, drinks, clothes, books, televisions, etc. In the event of a collision, loose items could fly around inside the cab. This could cause personal injury.

CAUTION

Do not overload the cab suspension. Make sure the weight distribution is equal in the cab. Total load for the cab suspension in the daycab, VN-420, VN-610 and VN-660 is 800 lb (360 kg), with driver and passenger included. Total load for the cab suspension in the VN-770 is 1,000 lb (455 kg), with driver and passenger included. Overloading the suspension leads to poor ride and lowered driving comfort.

Front Overhead Storage

There are several combinations of the overhead storage compartments mounted over the windshield. The compartments are split in the middle and they can be combined to cover the whole width of the cab or just over the driver.

The storage compartments have a maximum storage weight limit of approximately 18 lb (8 kg) per section. That is, the limit covers each compartment section, either left or right side.

W8001098

https://truckmanualshub.com/

VN-610 and VN-660 Storage

The VN-610 sleeper overhead storage comes in two sizes. If the sleeper contains an upper bunk, only the short cabinets are available. Each cabinet has a netting that covers the opening to hold items in place during driving.

The short compartment load limit is 33 lb (15 kg). The long compartment load limit is 40 lb (18 kg).

In both VN-610 and VN-660 there are two floor cabinets — a clothes hanger cabinet and a drawer cabinet. The drawers have latches for holding them in place during driving. The top drawer also has a key lock so it can be used to store documents. There is also a pull-out writing tablet in the top part of the cabinet.

The drawer cabinet load limits are 9.5 lb (4.3 kg) for the top drawer and 14.5 lb (6.5 kg) each for the two lower drawers. The drawer cabinet is substituted for a refrigerator when this option is chosen. The clothes hanger cabinet does not have a load limit since it is resting on the floor.

In the VN-660 with an upper bunk, there are two overhead storage cabinets. The larger opening is covered with netting for holding items in place during driving. The load limit for the cabinets is 10 lb (4.5 kg) per shelf or 30 lb (14 kg) total per each cabinet.

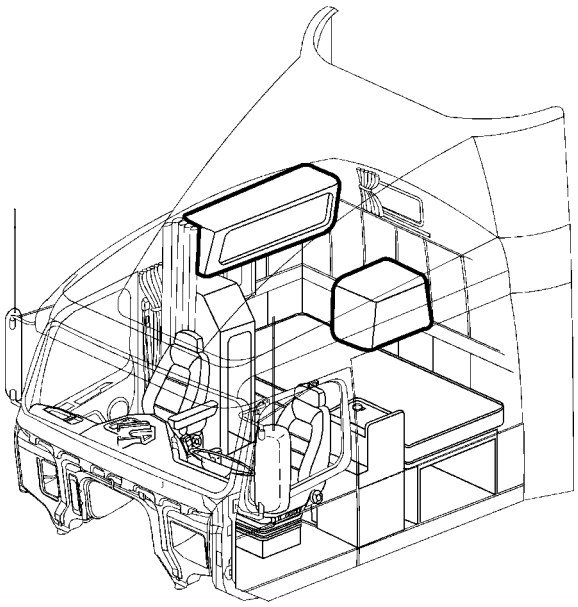

W8001394

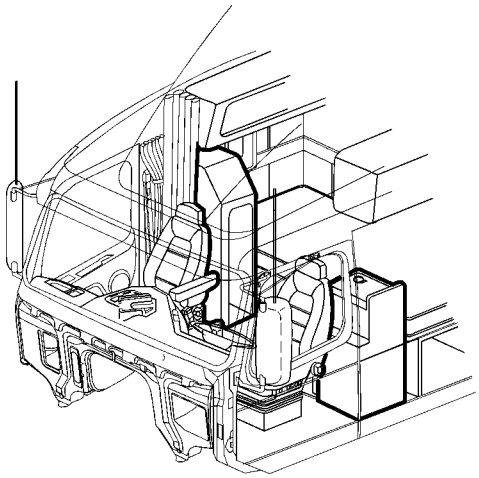

W8001395

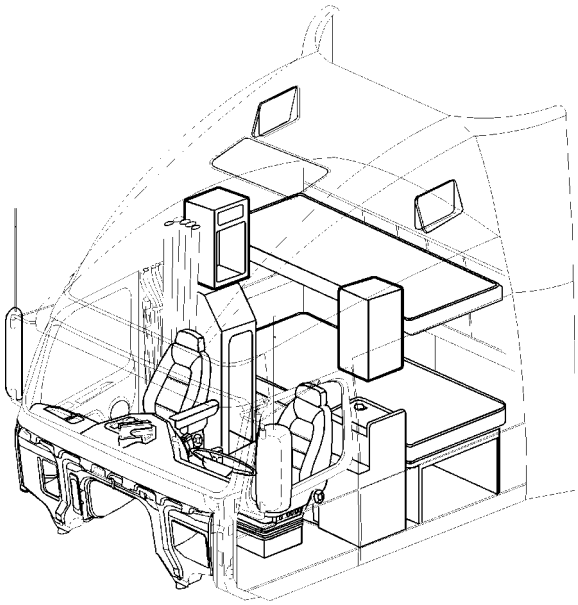

W8002332

https://truckmanualshub.com/

In both the VN-610 and VN-660, access to the luggage compartment is made by lifting the lower bunk. The bunk support is also the cover for the luggage compartment. The bunk support is counterweighted with gas springs that make lifting easy.

To open, release the latch mechanism and lift the bunk. Remove heavy items from top of the bunk before opening.

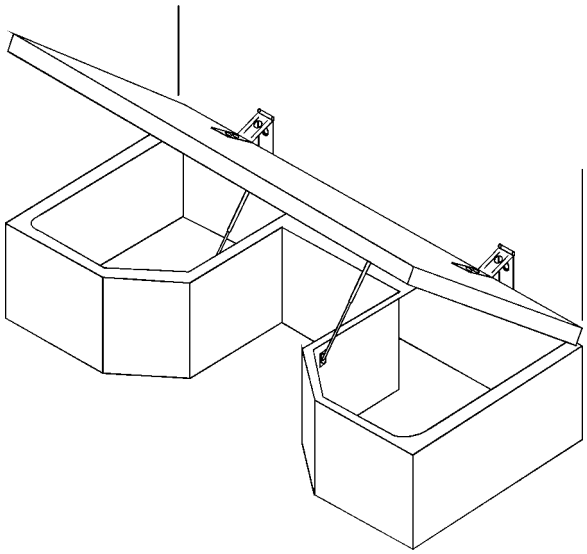

W8002021

The VN-610 front overhead roof storage offers extra storage for smaller items. Load limits are 3 lb (1.5 kg) for the side compartments and 5 lb (2.5 kg) for the center compartment.

W8001096

The VN-660 front overhead roof storage is the same as for the VN-770.

Load limits for the right and left sections, are 5 lb (2.5 kg) for upper shelf and 15 lb (7 kg) for lower shelf. Load limit for the center section side shelves and the center shelf is 3 lb (1.5 kg) each.

W8001861

https://truckmanualshub.com/

VN-770 Storage

Rear wall storage in the VN-770 varies depending on if an upper bunk option is chosen or not.

W8001858

The smaller storage units are also stereo speaker holders and mountings for the bunk restraint latches. Each opening is covered with a netting for keeping stored items in place. The top netting bar is spring loaded. To access the opening, press the bar down.

Load limit for the middle, large opening storage unit is 3 lb (1.5 kg) for the side openings and 11 lb (5 kg) for the center opening. The smaller (top and under upper bunk) storage load limit is 3 lb (1.5 kg) for the outer openings and 11 lb (5 kg) for the center opening.

The driver side storage upper part can be either a pantry-type cabinet with doors (see illustration) or an open cabinet with netting covering the storage openings (not illustrated). The pantry has an optional 120 V electrical connection for a microwave oven. The doors have latches that are accessed by hand from the bottom part of the door.

Load limits are: 5 lb (2.5 kg) for the top shelf, 15 lb (7 kg) for the upper shelves and 33 lb (15 kg) for the microwave shelf.

W8001865

https://truckmanualshub.com/

The driver side storage bottom part can contain a refrigerator. If a refrigerator is not delivered with the vehicle, it is fully prepared for installing one at a later time.

W8001912

The passenger side storage upper part is prepared for TV and video. There is also general storage above. There is an optional 120 V electrical connection available for accessories.

Load limits are: 5 lb (2.5 kg) for the top shelf, 15 lb (7 kg) for the upper shelves and 33 lb (15 kg) for the TV shelf.

W8001862

The passenger side storage bottom part is a clothes cabinet. It is equipped with doors that latch closed when shut.

W8001867

https://truckmanualshub.com/

On the passenger side of the lower bunk, there is a storage cabinet for items that do not need to be at hand at all times. In the daytime, this storage area is hidden by the backrest cushions.

W8001870

Access to the luggage compartment is made on both sides through a hatch under the outer bunk cushions. The hatches are secured with a rubber cord. To open the hatch, loosen the cord and pull up the hatch with it. On the VN-660, there is a velcro strap to hold the lid in the open position.

W8001873

In the front part of the cab roof there is additional storage. Load limits for the right and left sections, are 5 lb (2.5 kg) for upper shelf and 15 lb (7 kg) for lower shelf. Load limit for the center section side shelves and the center shelf is 3 lb (1.5 kg) each.

W8001861

https://truckmanualshub.com/

Sleeper Bunks

General

There is only one bunk available for the VN-420. For the VN-610, 660 and 770, an upper bunk is available and a lower bunk is standard.

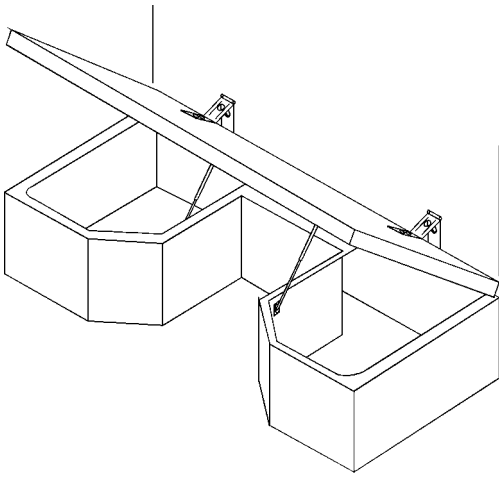
W8002021

The bunks for the VN-420, 610 and 660 cover the luggage compartment. They are hinged for access to luggage from inside of the cab.

To gain access, release the latch mechanism and lift by the edge of the bunk platform. Gas springs aid in opening and closing the platform.

WARNING

Support the bunk with one hand while releasing the latches. Failure to support the bunk may lead to the bunk falling without control, causing personal injury.

The upper bunks for the VN-610, 660 and 770 are also hinged and can be raised out of the way. The VN-610 and VN-660 use the safety bunk harness latch for holding the bunk up. The VN-770 has latches on both sides of the wall that hold the bunk in position. To release the latches, pull the latch strap in the middle of the bunk underside. Support the bunk before release so it does not fall unaided.

W8001885

When the bunk is raised and latched, make sure that the latches on both sides close and hold the bunk properly. For more information on bunk safety restraints, see page 53.

https://truckmanualshub.com/

VN-660 Bunk Access

To climb up to the upper bunk, use the grabhandles and footstep mounted on the right hand side cabinet.

DANGER

Always have three limbs (one foot and two hands or two feet and one hand) in contact with the floor, bunk or step at all times when entering or exiting the upper bunk. Failure to follow this procedure can lead to a fall and cause severe personal injury or death.

Start the climb by grabbing the grabhandles with both hands. Place the right foot on the bunk bottom to the right of the cabinet and the left foot on the upper step, as shown. Put both feet on the upper step and move the right hand to the upper bunk for support. Swing the upper body into the bunk and sit down.

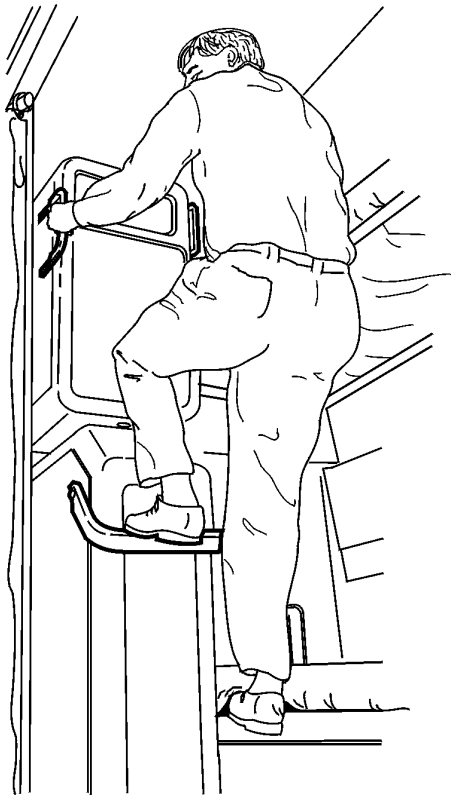

W0001769

https://truckmanualshub.com/

VN-770 Bunk Access

In the VN-770, there are two ways of climbing to the upper bunk. There is always a footstep available, located in the passenger side cabinet. Place the left foot on the footstep while holding on to the grab handle (illustrated below). Hold on to the handle in the middle of the bunk front edge and pull up into the bunk.

W8001886

The grab handle for upper bunk access is located on the cabinet.

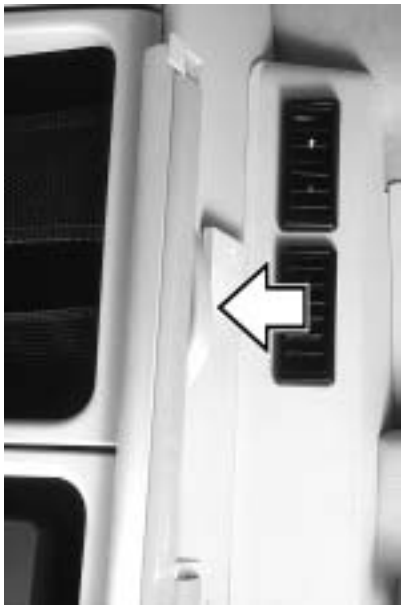

W8001910

https://truckmanualshub.com/

WARNING

Support the ladder with one hand while releasing the lock straps. Failure to support the ladder may lead to the ladder falling out, causing injury to leg or foot.

An upper bunk ladder is also available. This is stored in its collapsed position behind the passenger side cabinet. To release the ladder, unsnap the lock straps. Support the ladder so it does not fall out unaided.

W8001888

The ladder unfolds out to provide a convenient climb to the upper bunk

W8001887

https://truckmanualshub.com/

DANGER

Before using the ladder to enter the upper bunk, make sure the free ladder leg is supported both at the upper catch and at the lower peg. Failure to secure the ladder leg may result in a fall and serious personal injury or death.

When the ladder is folded out, lift the outer leg and guide it into the catch that is located on the upper bunk.

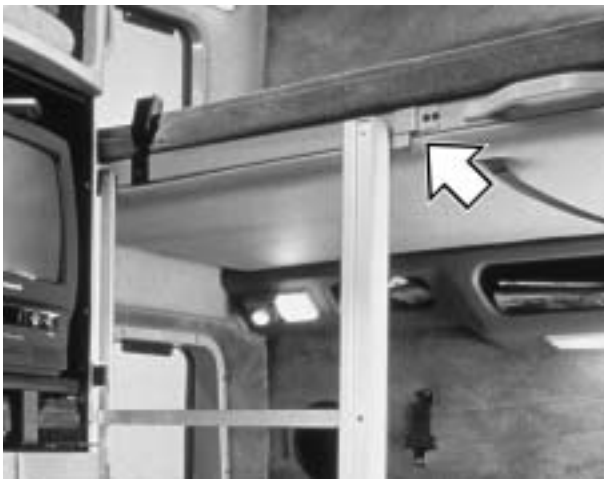

W8001890

Lower the leg down and place the peg into the hole at the bottom. Test the ladder by pulling on it before climbing up.

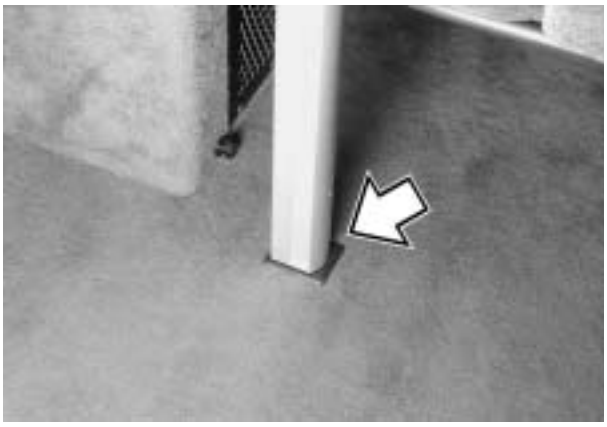

W8001889

WARNING

When folding the ladder back into storage position, make sure fingers are out of the way. If fingers are on the inside section of the upright pole, they may be pinched in the scissoring action of the folding ladder.

https://truckmanualshub.com/

VN-660 and VN–770 Sleeper Table

DANGER

Do not sit at the table when the vehicle is moving. It is intended for use only when the vehicle is parked. Passengers should be in the passenger seat wearing the safety belt or in the bunk with the bunk restraint attached. Failure to follow these instructions may result in severe personal injury or death in the event of a sudden stop or accident.

An advisory label is attached on the rear face of the driver side cabinet.

W8001898

To raise the table, remove the cushions from the bunk and put them to the sides.

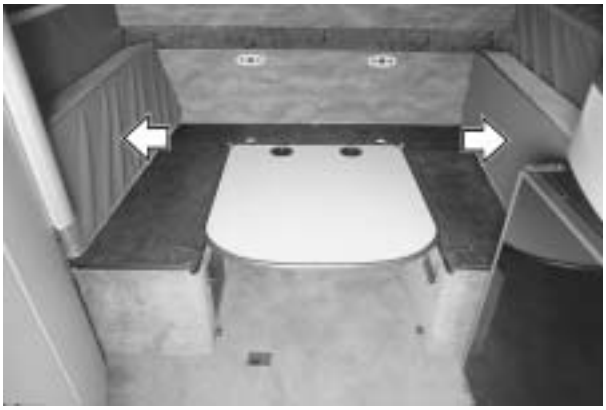

W8001891

Release the latch by pulling the handle underneath the tabletop. Raise the table slightly.

W8001893

https://truckmanualshub.com/

Line up the latch pegs with the holes in the back wall.

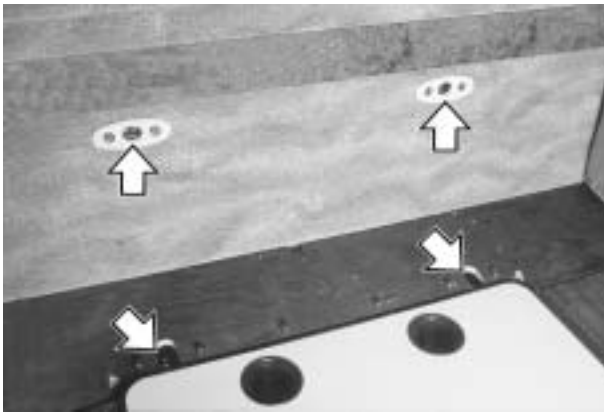

W8001892

Push the table firmly into the holes. Make sure the latches have caught properly by pulling out on the table.

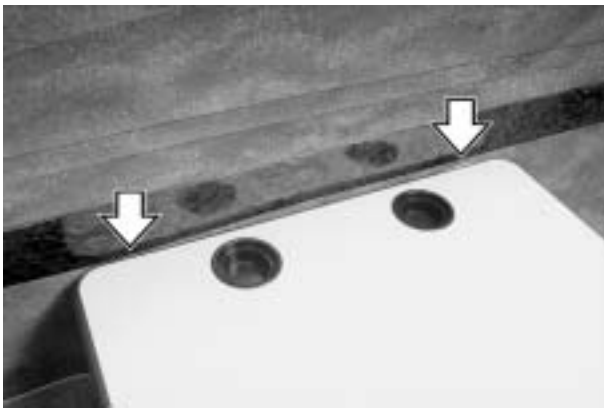

W8001894

When the table is in place, put the cushions in place to form a seat and backrest.

W8001895

https://truckmanualshub.com/

To lower the table, remove the cushions and pull the handle underneath the tabletop to release the latches. Lower the table to its resting position.

Place the seat cushions toward the walls and then position the backrest cushions as illustrated.

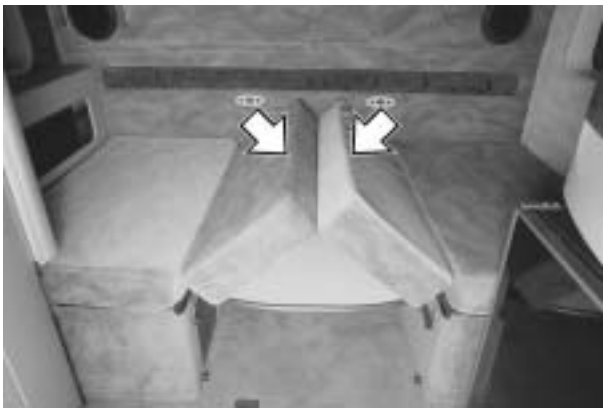

W8001896

Press down on the cushions in the middle to form a mattress.

W8001897

https://truckmanualshub.com/

Sleeper Compartment Sink

A built-in sink is available as optional equipment for the VN-770 sleeper model. It is located on the left side, in the cabinet behind the driver.

W8002162

The sink is mounted in the drawer space. To pull out, grasp the drawer lip and release the latch. Pull out until the faucet can be raised without hitting the cabinet.

CAUTION

Never run the pump without water in the freshwater tank. The pump may be damaged if run dry.

To operate the water pump there is a combined valve and switch in the knob (1) on the base. Turn on the 12V switch on the sleeper switch panel to the left of the tower cabinet, then turn the knob slightly to start the pump. Turn the knob further to increase water flow. When the knob is turned fully back to rest position, the pump will stop.

W8002161

CAUTION

Make sure the pump is turned off before pushing the drawer in. If the pump continues to deliver water, overflowing water can flood the cab floor.

In the bottom of the sink there is a spring loaded drain plug that is sealed by pressing down and twisting clockwise. To release for letting water drain off, turn counterclockwise and the spring will lift the plug and open the drain.

https://truckmanualshub.com/

Fresh Water Tank

Water is drawn from the fresh water tank (1) located beside the waste water tank (2) in the left hand side luggage compartment. Refill fresh water tank with potable drinking water only. Tank volume is 9 gallons (34 liters). On top of the tank is a hose (3) that serves as a filler and a vent tube. In the bottom of the tank is a drain valve (4), with a hose attached, for draining the tank to the outside.

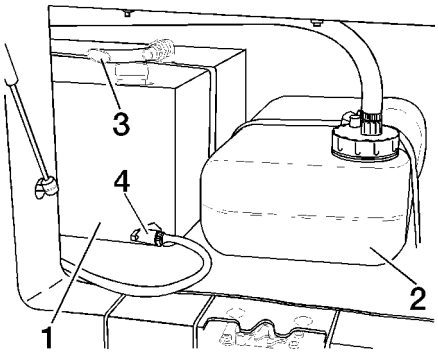

W8002168

It is not recommended to let water remain unused in the tank for over 2 months. Clean and refill as necessary.

CAUTION

USE POTABLE DRINKING WATER ONLY. Verify with the supplier of any water prior to filling the fresh water tank that it is potable to avoid contamination of the tank. In the event that non-potable or contaminated water enters the fresh water tank, it should be drained and the tank should be cleaned out with a good commercial cleaner/disinfectant. The tank should also be tested for purity prior to being used for drinking. It may be necessary to replace the tank if it cannot be cleaned properly.

CAUTION

Fresh water and waste water tanks must be drained if the vehicle is not being used and the outside temperature is below freezing. Also drain the hose from the pump to the faucet. Failure to drain the system may result in component damage due to water forming ice.

https://truckmanualshub.com/

To fill the fresh water tank, unscrew the fill hose from the elbow fitting and remove the fill cap (5) from the tank. The fill hose should be connected to a hose with a gardenhose-type fitting. Before turning the water on, turn the valve handle (6) on the fill hose to the side to close the valve (see lower illustration). When the end of the fill hose is inserted in the water reservoir, open the valve slowly to fill. The valve is fully open when the handle is parallel with the hose.

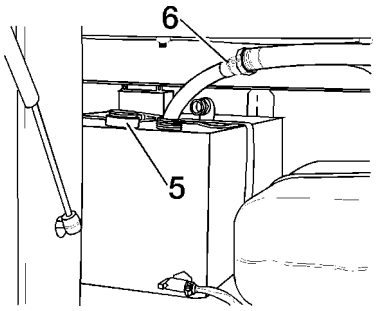

W8002167

When the tank is filled, reinstall the fill hose on the elbow fitting. Do not tighten more than finger tight. Make sure that the valve handle now is fully open (1) to allow venting. If the valve is left in any of the closed positions (2), the pumped out water may generate an under-pressure in the tank, interfering with the pump operation.

NOTE! The valve positions are shown as viewed from inside the cab.

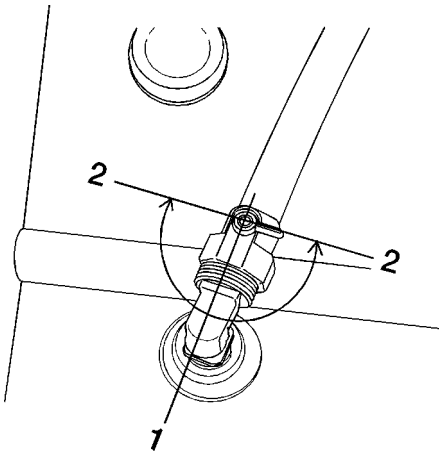

W8002169

https://truckmanualshub.com/

Waste Water Tank

When the water is drained from the sink, it is collected in a waste water tank behind the fresh water tank. Waste water tank volume is 5 gallons (19 liters). The tank is fastened to the floor with a strap that can be easily opened for tank removal.

Before removing the waste water tank, loosen the strap around the tank and unscrew the drain hose from the inlet cap. Carry the tank to an approved dump station and empty by removing the inlet cap and tilting the tank up to let the waste water drain.

Flush the tank with fresh water. Replace the inlet cap, strap the tank into the cab and attach the drain hose.

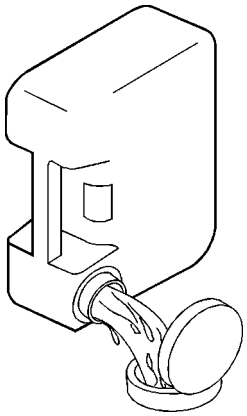

W8002170

https://truckmanualshub.com/

Miscellaneous Sleeper Equipment

Sleeper Clock/Alarm

Clock Modes

The clock has four modes that can be accessed by pressing the MODE button. The modes that are not for clock or alarm function are described on page 190.

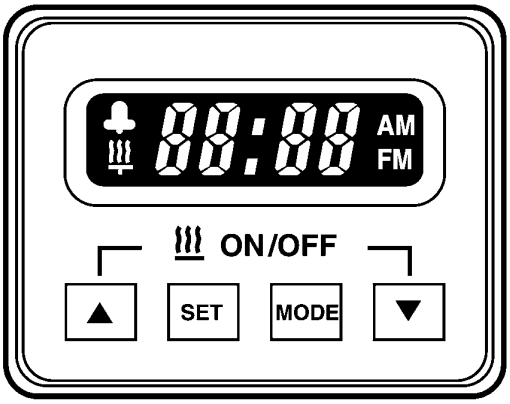

T8007012

Display Mode Symbols

To set the clock or to set the alarm, use the "MODE" button to switch between functions.

The three symbols illustrated below can be shown on the display.

Symbol showing that the alarm function is selected.

Symbol for the parking heater. See page 189 for information.

Symbol for the parking heater. See page 189 for information.

https://truckmanualshub.com/

Clock Function

Setting Clock

SET

Press in the "SET" button for 3 seconds and the hour digits will start to flash.

▲ / ▼

Set the hour by pressing the up or down arrow button. The time can either be set as an AM-PM or 24-hour mode. To go from the 24-hour mode to the AM-PM mode, continue to press one of the arrow buttons until the new mode is shown.

SET

Accept the hour by pressing the "SET" button. The minute digits will now start to flash.

▲ / ▼

Set the minute by pressing the up or down arrow button.

SET

Accept the minute by pressing the "SET" button. The clock is now set.

https://truckmanualshub.com/

Alarm Function

When the alarm function is selected, the following can be operated:

Setting Alarm Time

MODE — Press the "MODE" button until the bell symbol appears in the window.

SET — Press the "SET" button. The hour digits will begin to flash.

▲/▼ — Set the alarm time hour with the up or down arrow button.

SET — Press the "SET" button to accept the hour. The minute digits will now start to flash.

▲/▼ — Set the alarm time minute with the up or down arrow button.

SET — Press the "SET" button to accept the minute. The display "ON" now appears.

▲/▼ — The set time can now be selected as either the alarm "ON" or alarm "OFF." This is alternated by pressing one of the arrow buttons.

SET — To accept the alarm "ON" or "OFF," press the "SET" button. The mode now returns to clock function. If the alarm is set, a solid bell symbol appears in the display. If no alarm is set, only the time will be displayed.

When the clock reaches the set time for alarm, and providing the alarm was set, a buzzer sounds intermittently for 60 seconds. To turn the buzzer off, press any button once.

If the alarm time setting has not been completed, the display returns to the clock function 30 seconds after the last button was pressed.

Switching Off Alarm Buzzer

▲ SET MODE ▼ — The buzzer is switched off by pressing any of the buttons. The alarm must be re-activated before the buzzer will operate again.

https://truckmanualshub.com/

Smoke Detector (option)

Your vehicle may be equipped with a smoke detector. The detector gives a warning signal when smoke particles enter it. Other particles of the same type (cigarette smoke, dust and exhaust gases) can also set off the alarm.

If driving in dusty environment or if the driver wants to smoke, the alarm can be silenced temporarily.

The alarm has two sound levels. The first ten seconds, the sound intensity is at 65 dB(A) and then it increases to 85 dB(A). The tone is pulsating. It can be temporarily silenced by pressing the function button (one the detector and one on the dash). The alarm is now switched off for 10 minutes. After that, the detector goes back to normal operation. When switched off, a short signal is heard every 50 seconds.

The detector battery is monitored automatically. When the voltage is too low to ensure proper function, a short signal is heard every 45 seconds. To check the battery, hold down the function button for approximately 5 to 10 seconds. If the battery is functional, the alarm sounds as long as the button is pressed.

The battery lasts for 1 to 2 years. Its lifespan depends on the number of alarms and high temperatures over 155°F (70°C). About 1 month before the battery is fully depleted, the alarm will start to sound in short bursts of sound. The detector functions normally during this time but change the battery as soon as possible.

The detector uses an ordinary 9 volt battery. Always test the alarm after replacing battery.

	Control Lamp	Signal
Operation	Flashes every 45 s.	Silent
Alarm	Flashes continuosly	Pulsating sound
Battery Change	Flashes every 45 s.	Beep every 45 s.
Switched Off Mode	Flashes every 10 s.	Beep every 50 s.

W8002479

https://truckmanualshub.com/

VN-660 and VN–770 Side Windows

The VN-770 has four and the VN-660 has two sleeper side windows that are used for ventilation. When running the air conditioning, it recommended that the windows be closed.

In the event of hard rain, the windows should be closed to prevent water from entering the cab.

The windows also serve as emergency escape exits. In the event of an emergency, kick the window open and climb out.

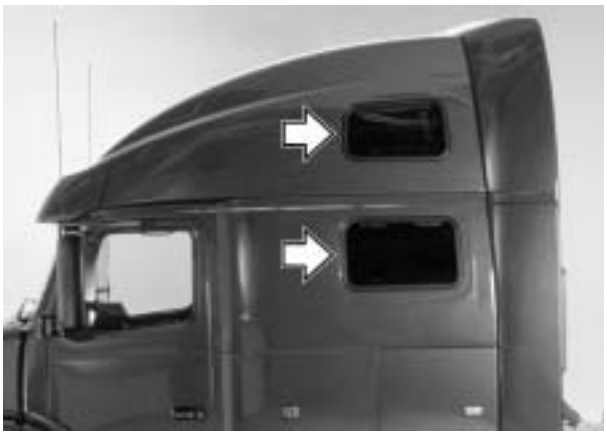

W8001473

The windows are operated with a knob that is turned clockwise or counterclockwise to open or close the window.

Do not force the window crank mechanism in the fully open position. The mechanism can be damaged trying to open the window beyond the stop position.

W8001856

https://truckmanualshub.com/

Cup Holders

On the rear face of one or both sleeper cabinets are cup holders. They normally are folded up. To use, fold down the base and fold up the support.

W8001881

There is also a cup holder in the middle of the dash. To open, press the top part of the lid in and the lid will fold out. To close, press the lid in until the latch closes.

There are also two cupholders molded into the engine cover.

W8001875

https://truckmanualshub.com/

Curtains

Curtains are available for all the sleeper cabs to ensure privacy and to darken the cabin from outside light. Various configurations are available. Curtains can cover the whole windshield area or go across the sleeper opening.

W8001877

When the curtains are not in use, they are stored out of the way and held in place with velcro straps.

W8001880

Covers for the VN-660 are to be stored in a rolled-up position in the opening behind the cabinet.

The covers for the VN-770 side windows are stored behind the backrest cushions. All covers are put on with snap buttons that are on the cover and window rim.

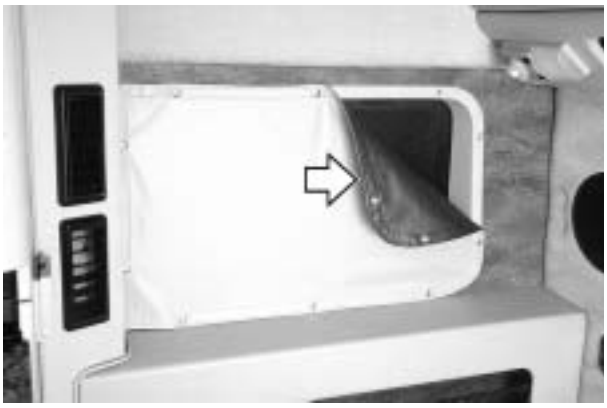

W8001911

https://truckmanualshub.com/

Antennas

Multiband Antenna

There are antennas mounted on the top of the mirror brackets for wideband reception. They receive or send signals for radio, CB and telephone. Each antenna carries multiple wire windings that work together with mirror bracket devices to cover the needs of many uses.

If the antenna is damaged, replace it only with a multiband type antenna. A regular antenna does not have the wiring necessary to give good reception for all uses.

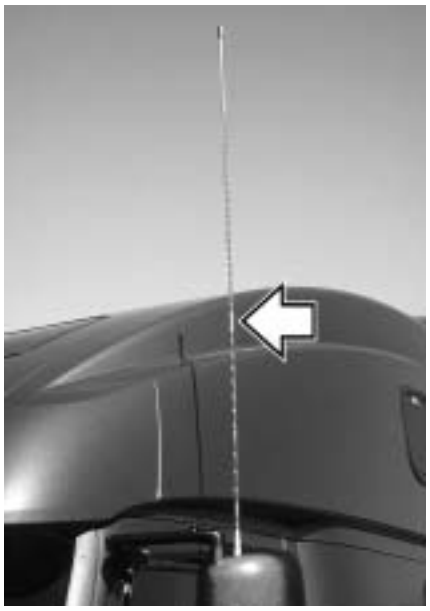

W3001997

TV Antenna

For the VN-770, the TV antenna is standard equipment. It is mounted to the inside of the headliner connected with a coaxial cable to the cabinet.

VN-610 and VN-660 antenna is accessible in the cabinet.

CAUTION

Do not pierce or drill through the headliner. The TV antenna may be damaged.

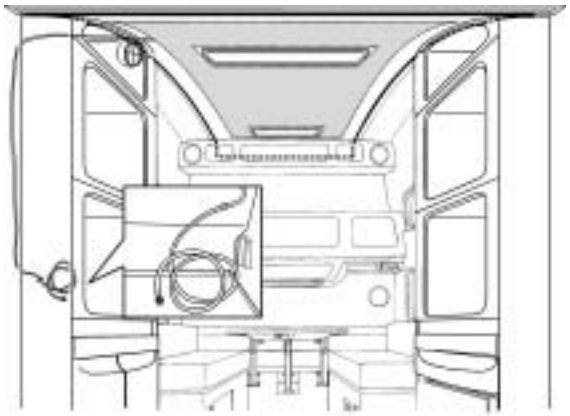

W3002010

https://truckmanualshub.com/

Antenna Multiplexer

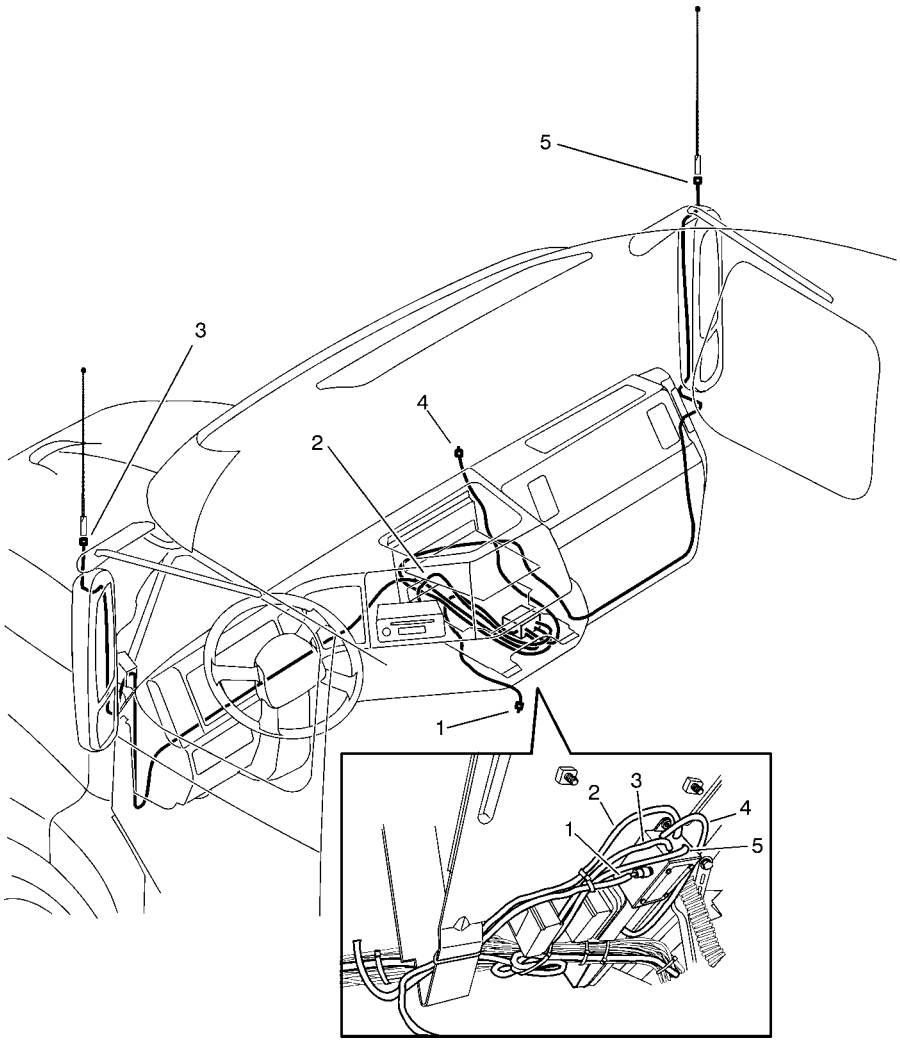

1 Cellular Phone Antenna Cable
2 Radio Antenna Cable
3 Left Side Antenna
4 CB Radio Antenna Cable
5 Right Side Antenna

Communications signals that travel to and from the antennas go through the antenna multiplexer. It is standard in the VN–660 and VN-770, and optional on other models. Coaxial cables for the cellular phone, CB radio and radio are included in the multiplexer system — all using the same set of antennas.

The multiplexer is accessed through the lower dash panels. Cable routing is as shown in the illustration above. Use only genuine Volvo replacement parts for this multiplexer system; standard antennas will give unsatisfactory performance. The windings in the antennas are specific to this system: different sections of the antenna are used for the cellular phone, radio and CB.

https://truckmanualshub.com/

Stereo/Radio

Stereo

The radio is mounted in the right hand side of the dash. Several models are available, from a basic unit to top of the line. In the VN-770, there is also a CD-changer available which is controlled from the unit in the dash.

Depending on the model, there are some important features built into the unit. Take the time to read the manufacturer's manual to be able to operate functions such as radio wake-up alarm, snooze function and theft-deterrent coding.

W3002006

CD-Changer

A CD-changer is available for VN–660 and VN-770. It is located in the passenger side overhead storage. The power amp is located in the same storage. There can be 4 to 9 speakers in the cab. The subwoofer is located in the lower bunk support.

Read the manufacturer's manual for operational information.

W3002428

W3002429

https://truckmanualshub.com/

Communication Equipment

CB Radio

There is an optional platform provided for a CB radio on top of the dash. The unit is held in place with a strap which can accommodate a variety of sizes. For electrical hook-up, see page 304.

The CB Radio can also be permanently mounted directly above the radio. When the optional switch panel is removed, a DIN standard radio mount is available.

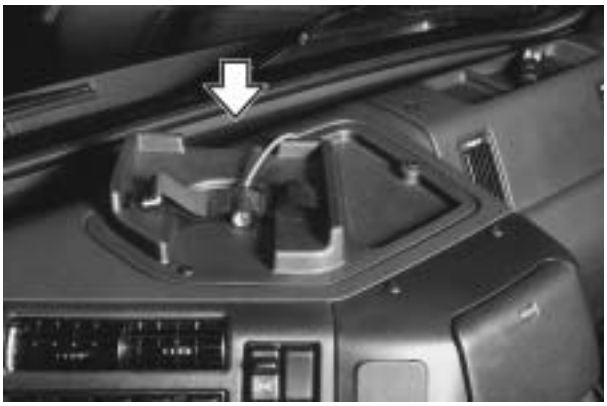

W8001876

Telephone

There is room on the dash for a mobile telephone. This can be hooked up to the multiplex box.

If the vehicle is delivered with a multiplex box, the connecting end of the telephone coaxial cable should be located at the lower dash cover.

W3002427

Road Relay

The Road Relay is an engine communication tool that allows the driver to have fuel consumption, time and mileage readouts and also programmed reminders for service intervals. The Road Relay should be permanently mounted directly above the radio.

Collected data can be downloaded for use in a stationary computer where the data can be collected and compared over time.

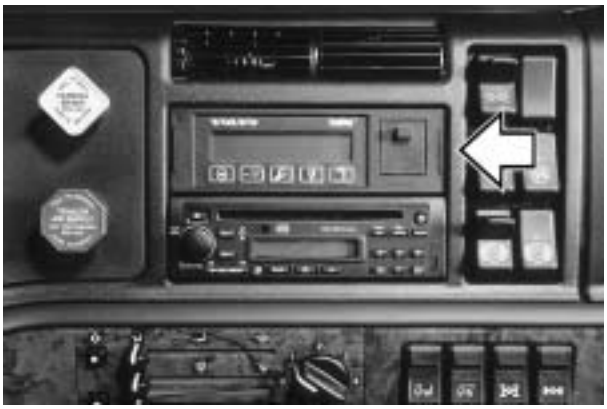

W3002420

https://truckmanualshub.com/

Television

WARNING

All items within the cab must be secured before the vehicle is set in motion. This includes, but is not limited to, drinks, clothes, books, televisions, etc. In the event of a sudden stop or collision, loose items could fly around inside the cab. This could cause personal injury.

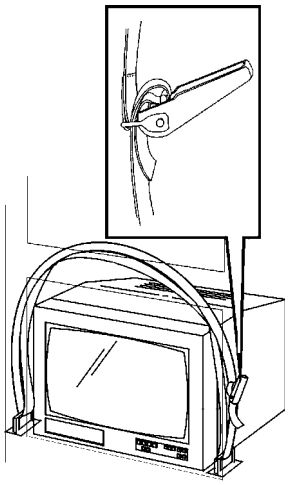

W8002366

The VN-610, VN-660 and VN-770 are already equipped for TV with a pre-installed antenna. The TV should be installed in the passenger side cabinet where there is a standard 12 V connection or an optional 120 V connection.

To prevent the TV set from moving when the vehicle is driven, the strap in the TV storage area should be clamped tight around the set. If the strap comes loose from the buckle, thread it as illustrated. Adjust the strap so it is tight around the set and then clamp the buckle down to lock it in place. The strap is wound around the TV as a loop, through the holddown brackets. Locate the buckle where it can be reached most easily.

https://truckmanualshub.com/

There is an optional television speaker available, located in the top of the sleeper switch panel. Beside the speaker, there is a jack for headphones. This is provided for silent viewing of the TV. When the headset jack is plugged in, the speaker is cut out.

W3002431

https://truckmanualshub.com/

Fuel Economy

General

The absolute fuel consumption (counted in miles per US gallon or liters per 100 kilometers) is determined by a large number of circumstances which can be related to one of the following main areas:

1 Build specification and equipment

2 Service and maintenance

3 External environment

4 Driving habits

Due to these factors, fuel consumption can vary considerably within what is called "normal fuel consumption." Fuel consumption can vary from over 10 mpg (20 L/100 km) when driving empty on a nice and dry summer road to 3.5 mpg (70 L/100 km) while driving with maximum permitted GVW, with vehicle and trailer, on a hilly and slushy winter road.

Build Specification and Equipment

Whenever a vehicle is used for transportation, its build specification, equipment and gross vehicle weight have a decisive effect on both fuel consumption and performance. The factors which have the greatest influence on fuel consumption are primarily: driveline combination, height of trailer or superstructure, use of air fairings, tire type, number of wheels, gross vehicle weight, and accessories.

https://truckmanualshub.com/

Driveline Combination

Engine, transmission and final drive must be selected in such a way that the engine can operate within the economic speed range at normal driving speed. This range is defined as where the engine makes the best use of the energy content of the diesel fuel.

A poorly selected rear axle ratio, which results in the engine speed being constantly above the optimum speed, will increase fuel consumption.

Superstructure and Air Fairings

The frontal area of the vehicle and trailer/superstructure is what pushes the air aside. The smoother the transition between the aerodynamic front and cab to the trailer/superstructure, the better the airflow. With better airflow, the engine has to produce less power to push the air to the side, especially at higher speeds.

There are partial and full air fairing packages available that should cover most vehicle specifications and applications. With flatbed trailers using tarpaulins to cover the load, make sure the cover is tied down well and presents a smooth surface.

Tires

Heavy duty treaded tires increase rolling resistance considerably. For long haul, choose a smoother, ribbed type tire. Choose a lugged type tire only when the added traction in mud and snow is needed.

The number of wheels (axles) has a direct effect on the rolling resistance and, thereby, the fuel consumption. For volume and/or low weight transports, the use of a 4x2 instead of a 6x4 should be considered.

https://truckmanualshub.com/

Gross Vehicle Weight

The gross vehicle weight of a vehicle combination has a large impact on the rolling resistance.

Accessories

As a rule, accessories such as roof rack, advertising signs, bug screens, exposed air horns, etc., have a negative effect on fuel consumption.

Service and Maintenance

A modern heavy-duty vehicle requires regular and preventive maintenance to ensure that all its components function as they should. Use the recommended preventive maintenance (PM) program that Volvo Trucks North America, Inc. has developed for the vehicles. This ensures optimal energy efficiency from all components that are important to fuel consumption.

Tires

If the tire pressure is too low, the rolling resistance increases and, thereby, increases the fuel consumption. The overall economy is also affected as tire wear increases considerably.

Brakes

Dragging brakes increase fuel consumption. They should be checked regularly. It is important that the release action of the air valves is fast and that the moving parts of the wheel brakes are checked for good adjustment and operation.

https://truckmanualshub.com/

Axles

An axle out of alignment will increase rolling resistance. Regularly check the front wheel alignment and axles on both the tractor and trailer/semi-trailer. If they are correct, there will be less rolling resistance, and therefore, lower fuel consumption.

A good sign of an axle or wheel out of alignment is uneven tire wear. Check the tires often.

Engine

Faulty or incorrectly adjusted engine components increase fuel consumption. The list below gives some typical components that can influence fuel consumption:

- Blocked (on the outside) charge air cooler/radiator package
- Faulty thermostats
- Blocked fuel filter
- Blocked air intake filter
- Faulty injectors
- Dirty turbo charger
- Air in fuel system
- Faulty fuel supply pump
- Faulty fuel relief valve
- Faulty fan thermostat/clutch

https://truckmanualshub.com/

External Environment

Under unfavorable conditions, the external environment can have a negative effect on fuel consumption. This can be broken down into two main groups: weather and wind, and the nature of the roads. Rain, snow, icy conditions and headwinds have a large negative impact on fuel economy, as do hilly roads and uneven road surfaces.

Headwinds

Headwinds have a large negative impact on fuel consumption. With tailwinds, fuel saving is only marginal.

Air Temperature

Low ambient temperature contributes to increased fuel consumption.

Rain, Snow and Road Surface

A wet road surface increases rolling resistance and, thereby, fuel consumption. Slush will increase consumption even more. In certain cases, the surface structure of the road can also have a negative effect on fuel consumption.

Gradients

A hilly road with many bends demands a higher output from the engine. The difference between flat, straight roads and hilly, winding roads can amount to as much as a 50 percent increase in fuel consumption.

When choosing your route, avoid hills, rough roads and frequent stops. See table with fuel consumption for the D12C 465 US00 with gross combined weight of 80,000 lb (40 t or 36.3 metric ton).

Maximum Acceleration	Fuel Consumption
0-45 mph (70 Km/h)	0.45 quarts (0.5 liters)
0-65 mph (105 Km/h)	1.0 quarts (1.1 liters)

https://truckmanualshub.com/

Driving Habits

The way in which a vehicle is being driven is the one factor which has the greatest influence on fuel consumption. Correct driving saves fuel and reduces vehicle wear. To achieve optimal running economy, the driver should always remember to:

- Start the engine correctly (especially important in winter season)
- Maintain an even and correct speed
- Keep the engine at its optimum speed range
- Use the correct uphill and downhill driving technique.

Starting the Engine

Start the engine according to the instructions in the Operator's Manual of the engine manufacturer (for a Volvo engine, see page 245). A proper start, especially during the cold season, saves fuel and reduces engine wear.

Sluggish lube oil in the engine makes cold starting more difficult. Therefore, it is important to always use engine oil with the correct viscosity. (For the sake of the overall fuel economy, it is also important to have the right viscosity of transmission and rear axle oils).

https://truckmanualshub.com/

Avoid High Engine Speeds

High engine speeds mean high fuel consumption. Jerky driving also increases fuel consumption when the vehicle is constantly accelerated and slowed down. Avoid a higher consumption by steady, even driving.

Refer to each engine manufacturer's operator's manual for information on the engine's optimum operating range.

Hill Driving Technique

Use the inertia of the vehicle to go over the crest of a hill under reduced power. Use gravity to help with acceleration when going down the hill. Build up speed before reaching the next uphill.

High Speed

With increasing speed comes an increasing wind resistance that negatively affects fuel consumption.

https://truckmanualshub.com/

Starting the Engine

Start Procedure

NOTE! For cold weather starting, see page 249.

These starting and operating procedures should be followed for all engines. For more detailed information about design and function on a non-Volvo engine, read the Operator's Manual from the engine manufacturer.

NOTE! Before starting the engine, see "Instruments and Controls" (starting on page 70) for detailed information on how the gauges and telltales work.

DANGER

Do not use ether or similar starting aids in a Volvo or other engine with a preheater. The Volvo engine is equipped with a preheater. Introduction of ether or other combustible material in the intake manifold could cause a fire or explosion, resulting in severe property damage, severe personal injury or death.

W0001484

DANGER

Never operate the starter without first placing the transmission in neutral or depressing the clutch pedal. Failure to follow these instructions may result in the sudden movement of the vehicle resulting in property damage, personal injury or death.

https://truckmanualshub.com/

1 Before starting the engine, perform the engine pre-trip inspection and daily maintenance checks in “Pre-Trip Inspection and Daily Maintenance” starting on page 32.

2 Make sure the parking brakes are engaged.

3 Place the transmission in neutral or depress the clutch pedal.

4

> **CAUTION**
>
> Do not crank the engine for more than 30 seconds at a time; wait two minutes after each try to allow the starter to cool. Failure to follow these instructions could cause starter damage.

NOTE! Some starters are equipped with an optional thermostat. If overcranking occurs, the thermostat breaks the electrical circuit to the starter motor until the motor has cooled.

Turn on the ignition with the switch key (see page 248 for ignition switch information). Some telltales will light up in a routine check that shows that bulbs and systems are OK. The ΔINFO and ΔSTOP telltales will stay on between 3 to 10 seconds. If any of the telltales stay lit, that function of the vehicle may not be operable. Do not operate the vehicle until the problem is repaired.

W3000753

https://truckmanualshub.com/

5 Turn the key on to the start position. Release key as soon as the engine has started. For the Volvo engine, the preheater can be engaged to help starting in cold temperatures. For switch function, see page 248.

6

> **CAUTION**
>
> If at start-up, or thereafter, the oil pressure gauge indicates any drop in oil pressure, the engine must be shut down immediately. Failure to stop the engine may cause major engine damage.

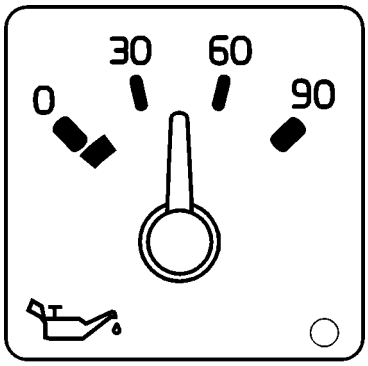

W3000902

When the engine has started, it takes a while to send lubricating oil to all bearings and shafts, and between pistons and liners. Wait for the oil pressure gauge to settle at a normal level, then bring engine speed up gradually. Increase speed as it warms up. Check all gauges during warm-up.

7 During warm-up, apply load gradually until the oil temperature reaches 140°F (60°C). To start a loaded vehicle, the minimum coolant temperature must be approximately 120°F (50°C).

https://truckmanualshub.com/

Stopping the Engine

Allow the engine to slow down and idle for 3 to 5 minutes before shutting it off. This allows the turbo to slow down and the cooling system to dissipate the engine heat. Switch the engine off by turning the ignition key to the **O**, or OFF, position.

CAUTION

Shutting off an engine immediately after high speed or full load operation can damage the turbo and cause heat stress in the engine. Always let the engine idle for 3 to 5 minutes before shutting it off.

https://truckmanualshub.com/

Ignition Switch

The ignition switch is located on the right side of the steering column just under the steering wheel. Standard equipment is a normal ignition switch.

W3000976

A steering wheel lock is available as an option. When the key is removed it actuates a detente pin that prevents the steering shaft from turning.

NOTE! The vehicle is delivered with 2 identical keys. If more keys are needed, order them through your Volvo Truck authorized dealer. **The keys are laser cut and require a special machine for copying, available through your Volvo Truck dealer. Record the key code and keep in a secure place. A new key can be made, using the key code, if the keys are lost.**

The ignition positions are:

O	Off
I	Radio, Accessories
II	Drive
II 1/2	Preheat (Volvo engine only)
III	Start

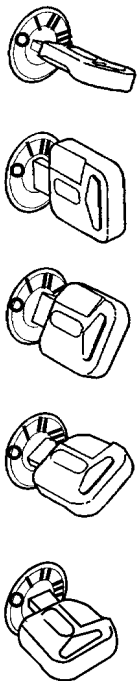

W3001302

The ignition switch has a restart inhibitor locking out the start position after one try, which means that the key must be turned back to **O** before a new attempt at starting can be made.

The key can only be removed when in the **O** or Off position.

For full starting instructions, see page 245.

https://truckmanualshub.com/

Cold Weather Start and Operation

Volvo Engine Cold Start

NOTE! These cold start instructions are for Volvo engines only. For other engine makes, see the manufacturer's handbook.

DANGER

Do not use ether or similar starting aids in a Volvo or other engine with a preheater. The Volvo engine is equipped with a preheater. Introduction of ether or other combustible material in the intake manifold could cause a fire or explosion, resulting in severe property damage, severe personal injury or death.

NOTE! Volvo engines have a unique cold start feature. Depending on the ambient temperature, the engine cranks two to four turns without injecting fuel. This provides cleaner combustion at start-up and promotes longer engine life.

To avoid excessive exhaust smoke when starting a cold engine, the intake air should be warmed up by using the preheater.

Turn the ignition key to the preheat position and hold momentarily to engage the preheater. It remains engaged and will light the preheater telltale between 0 and 50 seconds, depending on the engine coolant temperature.

T3008841

https://truckmanualshub.com/

Coolant Temperature	Preheater Engagement Time (seconds)
Above +120°F (50°C)	0
Above +50°F (10°C)	0
Between +4°F (-15°C) and +50°F (10°C)	25 ± 2 to 50 ± 2
Below +4°F (-15°C)	50

When the engine has started, the preheater may be re-engaged to assist in faster engine warm-up. To re-engage, turn the key to the preheat position and the preheater will engage. The starter will not engage as the start position is locked out.

Engines Without Preheater

Engines not equipped may, depending on coolant temperature, take longer to start. If this should happen, do not release the ignition key until the engine has started (while still observing the 30 second maximum cranking time).

https://truckmanualshub.com/

Ether Start

DANGER

Do not use ether or similar starting aids in a Volvo or other engine with a preheater. The Volvo engine is equipped with a preheater. Introduction of ether or other combustible material in the intake manifold could cause a fire or explosion, resulting in severe property damage, severe personal injury or death.

DANGER

Do not breathe the ether fumes. Breathing ether fumes could result in personal injury or death.

DANGER

If using a cold start system, make sure to read and follow the manufacturer's instructions regarding its use, handling and storage. Many starting fluids are sold in capsules or pressure cans and improper usage can be dangerous, resulting in explosion, personal injury or death.

W0001484

Ether allows combustion with lower cylinder temperatures. A hand-held spray can for injecting ether through the engine air intake system will usually provide quick starting to as low as –10°F (-23°C). Below this temperature, a permanently installed system for injecting a combustible vapor directly into the intake manifold is necessary.

Only inject ether vapors when the engine is cranking. Use it sparingly! Excessive ether use can cause piston and ring damage.

https://truckmanualshub.com/

Cold Weather Operation

If the engine is in good mechanical condition and the necessary preparations are taken for cold weather operation, ordinary cold weather will not cause difficulty in starting or loss of efficiency.

Cold weather operation does require changes in operating practices, maintenance procedures, lubrication and fuel. Additions to the vehicle, such as heated fuel filters, fuel tank heater, engine block heater, winterfront, etc. can make winter operation easier. Contact your Volvo Truck dealer for the correct accessories and information about installation.

If satisfactory engine temperature is not maintained, increased engine wear will result in higher maintenance cost. Accessories should be designed to be easily disconnected when switching to driving in warmer weather so they do not affect the operation of the engine.

For cold weather operation follow these recommendations:

- When starting the engine in temperatures below 32°F (0°C), use engine lubricants of lower viscosity. See the "*Operator's Manual, Maintenance and Engine*" for more information.
- When the temperature is below freezing, make sure the concentration of antifreeze in the coolant is sufficient to prevent freezing. See "*Operator's Manual, Maintenance and Engine*" for more information.

https://truckmanualshub.com/

- During cold weather, give more attention to the condition of the batteries. Test them frequently to ensure sufficient power for starting. A dead battery may freeze.
- Fuel cloud point is the temperature at which wax crystals become visible, which is generally above the pour point of the fuel. To keep the fuel filter elements from plugging with wax crystals, the cloud point should be no higher than the lowest ambient temperature at which the engine must start.

To prevent wear and possible damage to the engine when it is cold, gradually bring it up to operating temperature before operating at high engine speeds or full load. After starting and before moving the vehicle, run the engine at 800 to 1000 r/min for 3 to 5 minutes. Operate at partial engine load until the coolant temperature reaches 165°F (75°C).

Engine Block Heater (option)

An electric engine block heater can be installed for keeping the coolant hot when the vehicle is parked. The heater is mounted through the side of the engine block with the heater coils in the coolant jacket. The heater does not interfere with normal operation and can be permanently installed.

W3001995

The heater runs on 120 V and has an easily accessible plug, located under the driver side door. The plug will hook up to a normal extension cable.

https://truckmanualshub.com/

Oil Pan Heater (option)

Oil pan heaters aid low temperature starting by improving oil flow to critical parts in the engine. This helps prevent engine wear. They are similar to block heaters and are wired into the same plug as the engine coolant heater.

Fuel Heater Filter (option)

If running in very cold weather, a heated fuel filter should be added. A number of different fuel heaters are available as options. They are electrically heated and regulated by a thermostat. They are typically built into the primary fuel filter housing.

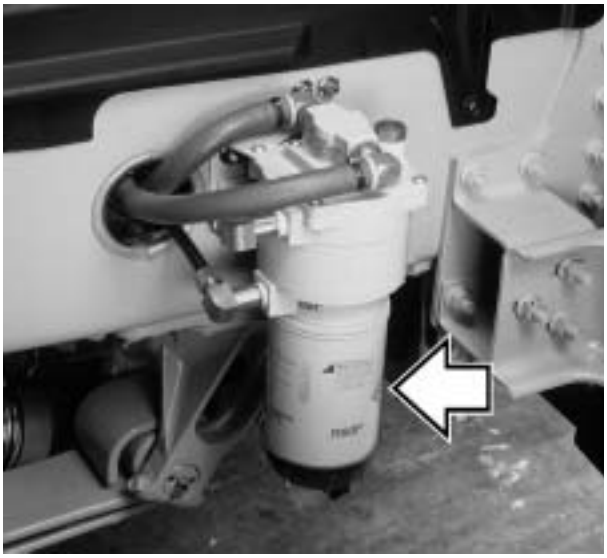

W2001067

Fuel Tank Heater (option)

An in-tank fuel heater is also available. In-tank heaters use hot engine coolant to warm the fuel. This prevents wax formation in the fuel during cold season operation. These heaters are thermostatically controlled and will automatically raise the fuel temperature to an optimum level.

https://truckmanualshub.com/

Winterfront

Volvo Trucks North America, Inc. does not recommend the use of winterfronts, shutters or any other shield in front of the grille or radiator package under normal circumstances.

Today's electronically controlled engines are designed to operate in cold temperatures without a winterfront. These devices, if not used properly, can cause higher exhaust temperatures, power loss, excessive fan usage, failure of the charge-air-cooler and a reduction in fuel economy.

Winterfronts are properly used in the wintertime during *very* cold weather with sustained temperatures below -15°F (-25°C). In these cases, coolant and inlet manifold temperatures must also be carefully monitored and controlled.

If a winterfront is used, it must conform to these specifications:

- The grille coverage should be such that airflow through to the charge-air-cooler is at a uniform rate over the entire area. This means that a single, small opening in the winterfront is not acceptable.

- Air passage must be distributed evenly across the grille and no more than 85% can be covered.

Please see your local Volvo Trucks dealer for Volvo recommended winterfronts.

NOTE! If there is engine or related damage that can be traced to an improperly used winterfront, the warranty is no longer valid for those parts.

CAUTION

Failure to remove the winterfront when temperatures go above -15°F (-25°C) could cause severe damage to engine, charge-air-cooler and/or loss of fuel economy.

https://truckmanualshub.com/

Engine Operation

General

Proper operation, driving techniques and maintenance are key factors in obtaining the maximum life and economy from a modern turbocharged diesel engine. This section has operational information about the components that make up the engine. For the best operation economy, see “Fuel Economy” page 237.

When changing gears, avoid *lugging* to extend engine life. When the engine is operating at full throttle and maximum governed speed cannot be reached or maintained, the engine is *lugging*. When approaching a hill requiring more power, it is necessary to downshift the transmission as the vehicle goes into the grade. Accelerating to the governed engine speed will give additional power at approximately the same road speed. For shifting instructions, see the transmission manufacturer’s Operator’s Manual.

Always start moving the load in a gear low enough so that the engine can be accelerated to the governed speed. Then shift to the next gear as the engine decelerates. For loaded vehicles, do not skip a gear or lug the engine while getting up to cruising speed. For empty or light loads, it is permissible to skip gears.

When operating on a level highway or at cruising speed, hold the engine speed at approximately 75 to 85 percent of governed speed (1400 to 1600 r/min for large displacement engines) to achieve power and economical fuel consumption.

https://truckmanualshub.com/

The operator should understand the operating characteristics of the engine the vehicle is equipped with. Modern diesel engines have maximum torques at much lower engine speeds than in the past. As such, these engines are designed to perform satisfactorily at a lower speed. New transmissions with wide ratio steps between gears demand the use of these engines.

Excessive exhaust smoke may be due to the type of fuel used, a restricted air cleaner, a malfunctioning fuel system or the way the vehicle is operated. Shift gears and increase or decrease the engine speed as necessary to obtain the engine speed/transmission gear combination which will prevent smoking. Excessive smoke indicates wasted fuel which creates carbon deposits in the engine and turbocharger. This causes excessive engine wear and oil consumption. Excessive smoke not only pollutes the atmosphere but can also cause shortened exhaust system life.

Engine Break-In

Engines used in the VN-series are run on dynamometers before being shipped from the manufacturer. In most applications, the engine can be put to work immediately, but the operator should be extra observant of the operating conditions shown on the gauges during the initial 100 hours or 3000 miles (5000 km).

A more frequent check of the engine compartment for fluid leaks, fluid levels and fastener tightness is also recommended during the initial period.

https://truckmanualshub.com/

Engine Shut-Down System

DANGER

Failure to take the necessary precautions when the ΔINFO or ΔSTOP telltales are on, can ultimately result in automatic engine shut-down and the loss of power steering. Vehicle crash can occur.

T3008861

T3008860

The engine shut-down system will automatically derate or stop the engine when one or more of the systems listed below reaches a critical stage:

- High Coolant Temperature
- Low Oil Pressure
- Low Coolant Level

Derate and shut-down functions may be applied differently, or added to, depending on the engine manufacturer. See the engine operator's manual for more information.

When the shut-down is activated, the telltales come on and the buzzer is also activated. From that time it will take 30 seconds before the engine shuts down. In this time period, find a safe place to pull off of the road.

After the engine has been shut down by the system, the override will allow a restart of the engine for a period of 30 seconds. This is so that the vehicle may be pulled off of the road, if necessary. The alarm will remain activated until repairs have been made to correct the problem.

CAUTION

The operator should not continually override the system as this can cause serious damage to the vehicle's engine.

https://truckmanualshub.com/

Engine Overspeed

This vehicle is equipped with a diesel engine and should not be operated in an area with a concentration of hydrocarbon vapors (for example gasoline or diesel fuel fumes). Be especially cautious of low-lying or closed-in areas. The vapors may be drawn into the engine through the air intake and cause the engine to overspeed. Hot carbon and other sparks may come from the exhaust system, and cause an explosion and fire.

If the vehicle is in an area where hydrocarbon vapors may be present, shut the engine off immediately if any abnormalities are experienced. Do not leave it unattended.

DANGER

The diesel engine will operate on any fuel which enters the cylinder, whether it is from the injectors or from the air intake system. Therefore, if any solvent is used to flush out the air cleaner element, the engine may overspeed during start-up. Engine damage and severe injury and/or death from burns or explosion can occur.

DANGER

Do not use ether or similar starting aids in a Volvo or other engine with . The Volvo engine is equipped with a preheater. Introduction of ether or other combustible material in the intake manifold could cause a fire or explosion, resulting in severe property damage, severe personal injury or death.

W0001484

https://truckmanualshub.com/

Idling

All engines in the VN models are electronically governed engines. The idle speed is pre-programmed from the manufacturer. Low idle speed is adjustable within certain limits (for most engines between 600 to 750 r/min). See page 261 for more information.

The common belief that idling a diesel engine causes no engine damage is wrong. Idling produces sulfuric acid, which breaks down the oil and eats into bearings, rings, valve stems and engine surfaces.

NOTE! Avoid excessive idling. If the vehicle is parked for more than 5 minutes, stop the engine. An engine can burn from 0.75 to 1.5 gallons (3 to 5.5 liters) of fuel per hour while idling. During long engine idling periods, the engine coolant temperature may fall below the normal operating range*. Incomplete combustion of fuel during the warm-up period can cause dilution of the oil in the crankcase, formation of lacquer or gummy deposits on the valves, pistons and rings, and rapid accumulation of sludge in the engine.

*The Volvo engines are equipped with a warmholding device (EPG = Exhaust Pressure Governor) to keep engine at normal operating temperature to prevent incomplete combustion, even at idle.

https://truckmanualshub.com/

Low Idle Adjustment

If the engine coolant temperature is above 122°F (50°C), the vehicle is stationary (engine running; accelerator released; parking brake on) and the PTO is not engaged, the engine low idle speed can be adjusted with the use of the cruise control function.

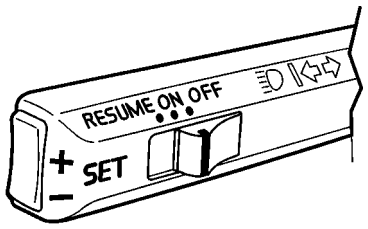

W3002499

1 Set the cruise control switch to the ON position.
2 Depress the foot brake pedal. Hold it down during the entire procedure.
3 Move the cruise control switch to the RESUME position and hold it there for four seconds. Release the switch. The engine speed will drop to the default low idle.
4 The idle speed is adjusted up with the SET+ switch. Each time the SET+ switch is pressed momentarily, idle speed will increase approx. 10 r/min (the speed cannot be increased above the maximum allowed by the engine manufacturer).
5 The idle speed is adjusted down with the SET- switch. Each time the SET- switch is pressed momentarily, the idle speed will decrease approx. 10 r/min. (the speed cannot be adjusted below the low idle set by the engine manufacturer). By continuously pressing the switch, engine speed will ramp up (SET+) or down (SET-).
6 When the desired engine idle speed is reached, push and hold the SET and move the cruise control switch to the RESUME position at the same time and hold them in position for four seconds. Release the switches.
7 Release the brake pedal to set the new idle speed. If an error was made during the adjustment procedure, the default idle speed will be maintained.

DANGER

Before setting the idle, apply the parking brakes and place the transmission in neutral. Failure to do so can result in unexpected vehicle movement and can cause personal injury or death.

https://truckmanualshub.com/

Idle Shutdown Timer

The idle shutdown timer can be programmed to shut down the engine after a specific engine idling time. This programming cannot be changed by the operator; however, it can be changed using special tools. For vehicles equipped with Volvo engines, use VCADS Elite software application; for vehicles equipped with Cummins engines, use the Pro-Link tool. See your local Volvo Truck dealer for details.

The permitted idle time can be set to the following time interval:

Volvo	1 to 40 minutes
Cummins	1 to 100 minutes
Detroit	2 to 100 minutes

When the idle shutdown feature is enabled, the engine will shut down at the set time under the following conditions:

- Vehicle speed is 0.
- Engine is running at idle speed.
- Coolant temperature is above 113°F (45°C).
- Parking brake is applied.

These are the standard choices when the vehicle is delivered. For more information about other customer adaptation choices, contact your Volvo Truck dealer.

https://truckmanualshub.com/

Uphill Operation

For best performance, allow engine speed to reach the bottom of the rated torque range before downshifting. Continue to downshift in this manner until a gear is reached that will maintain the desired speed. Continue to operate at the rated torque if the vehicle will make it to the top without a downshift. Begin upshifting as the grade of the hill decreases and the engine begins to accelerate above 1600 r/min. Driving this way will give the best fuel economy and performance.

NOTE! Allowing the engine to lug down to the end of maximum torque range is permissible if the vehicle is cresting the top of a hill. However, extended operation at engine speeds below the maximum torque range (usually 1100 to 1200 r/min) will raise exhaust temperature and cylinder pressure. This can lead to reduced engine life.

Downhill Operation

CAUTION

Do not exceed engine manufacturer's recommended maximum engine speed. Engine damage can occur. If equipped with an engine or exhaust brake, do not exceed 2300 r/min.

On a downgrade, do not coast with the clutch pedal depressed or the transmission in neutral. Select a gear that does not allow the engine speed to exceed the engine manufacturer's maximum engine speed recommendation. Use the engine or exhaust brake and/or the service brakes to control the vehicle speed. A simple rule is to select the same gear used to go up the grade.

https://truckmanualshub.com/

High Altitude Operation

Engines lose power when operated at high altitude because the air is too thin to allow burning as much fuel as at sea level. For naturally aspirated engines, this loss is about 3 percent per 1000 feet (300 m) increase in altitude above sea level. Most turbocharged engines are rated for higher altitudes and will not lose as much power as a naturally aspirated engine.

An engine will produce excessive exhaust smoke at high altitude unless a lower gear is used. Shift gears as needed to avoid excessive exhaust smoke.

Closely monitor the gauges during high altitude operation. The thinner ambient air reduces the efficiency of the engine cooling system. Engine overheat or cylinder damage could occur if the engine is operated at full load for extended periods at high altitudes in hot weather. Downshift and reduce vehicle speed to reduce engine load when driving on long grades in these conditions. This will help keep engine air intake manifold and coolant temperatures within safe limits.

https://truckmanualshub.com/

Cruise Control

DANGER

Do not use the cruise control in heavy traffic, with ice/snow on the road or during other unfavorable conditions. This may lead to a loss of vehicle control, causing a vehicle crash and can result in personal injury or death.

Engaging

The cruise control switches are located on the turn signal lever.

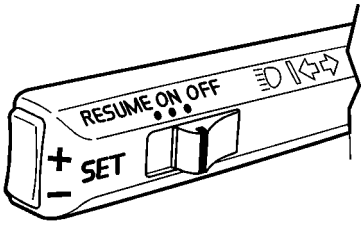

W3002499

To engage and set desired speed:

1 Set the cruise control switch to ON.

2 When the desired vehicle speed has been reached, momentarily press in the SET+ or SET- switch on the end of the lever.

3 If the speed needs to be increased, press the SET+ switch. The vehicle speed will increase as long as the SET+ switch is pressed (speed will not increase above the maximum programmed speed). Release when the desired speed has been reached.

4 If the speed needs to be decreased, press the SET- switch. The vehicle speed will decrease as long as the SET- switch is pressed (speed will not decrease below the minimum programmed speed). Release when the desired speed has been reached.

NOTE! The cruise control cannot be engaged at speeds below approximately 30 mph (45 km/h) and engine speed below approximately 1,000 r/min.

https://truckmanualshub.com/

Disengaging

The cruise control is disengaged if the brake or clutch pedal is depressed, or if the cruise control switch is set to OFF. If the ignition key is turned back to the accessories position (R), the cruise control system will automatically be disengaged.

Resuming Vehicle Speed

The previously selected cruise speed is retained in the memory. When the cruise control switch is pushed to the RESUME position, the vehicle resumes the previously set speed (providing vehicle speed is exceeding approximately 10 mph (15 km/h) when the switch is pressed).

Acceleration

Momentary acceleration (such as for overtaking another vehicle) does not interrupt cruise control operation. After overtaking, release accelerator and let the vehicle slow to cruise control speed. The previously set speed will then be maintained without having to set the switch to RESUME.

https://truckmanualshub.com/

Fuel Tank Cap(s)

DANGER

Do not remove the fuel tank cap near an open flame. Diesel fuel vapors are combustible and can cause an explosion or fire, resulting in severe personal injury or death.

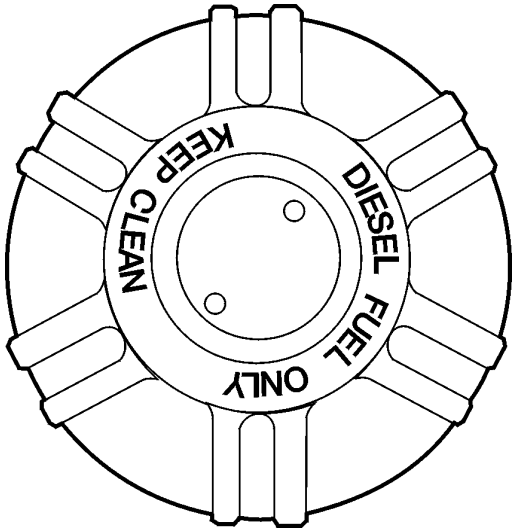

W2003143

Some fuel tank caps have a pressure and a thermal relief function built into the cap. These functions are designed to avoid fuel spills in the event of an accident. The pressure relief function of the safety venting system has a crack pressure high enough to retain fuel in the tank regardless of the orientation of the vehicle (5 to 8 psi).

The thermal relief feature is large enough to limit tank pressure to a safe level even when the remaining fuel is boiling in the tank, but not so large as to dump fuel unnecessarily. The thermal relief should respond as much as possible to fuel temperature rather than flame temperature.

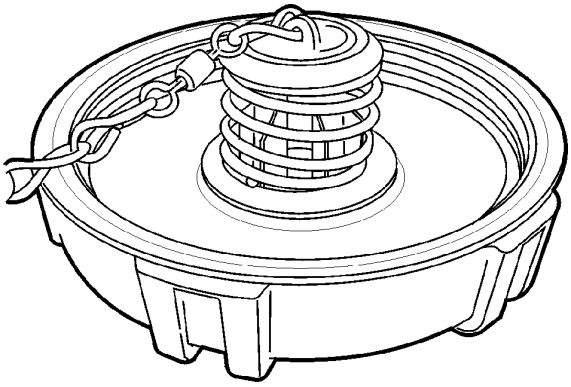
W2003144

These features are also available on the optional lockable fuel tank cap.

WARNING

Only replace the cap with a cap containing the same features described above. Unnecessary fuel spills leading to increased fire hazard may be the result of using a cap without the pressure and thermal relief mechanisms.

In the case the cap is lost, it must be replaced with a cap containing the same features.

https://truckmanualshub.com/

Fueling

Air is always present inside the fuel tanks, entering mainly through the tank ventilation. With the air being heated up and cooled down, condensation is formed and water is mixed in the fuel. To avoid condensation when the vehicle is parked for longer periods, fill the tanks up to 95% of capacity. Do not fill more than that, as the fuel needs to have room for expansion during the heat of the day.

DANGER

Do not carry extra fuel containers in the cab. Fuel containers, full or empty, may leak, explode or give added fuel to a fire. Failure to follow this precaution may lead to a fire and serious personal injury or death.

DANGER

Do not smoke while fueling the vehicle. The glow from the cigarette can ignite the diesel fuel, causing an explosion resulting in serious personal injury or death.

https://truckmanualshub.com/

Clutch

General

DANGER

Before starting the engine, set the parking brakes and place the transmission in neutral. Failure to do so can result in unexpected vehicle movement and can cause serious personal injury and death.

W4000760

Do not allow the clutch to slip excessively. This would cause excessive heat to be generated and the clutch will be damaged and bring on premature failure. As soon as the vehicle is moving, remove the foot from the pedal for complete clutch engagement. Once the clutch is fully engaged, heat and wear does not affect it.

Do not shock load the drive line through rapid engagement of the clutch. Extreme care should be taken when driving heavy loads up hills. Always use the lowest gear when starting out under adverse conditions.

When operating a vehicle equipped with a clutch brake, the clutch pedal should not be depressed more than halfway to the floor while shifting, except when the vehicle is at a stop. To re-enter the low gear from neutral or reverse, or to enter reverse gear from neutral or low, the clutch should be depressed all the way to engage the clutch brake. This stops the rotation of the transmission input shaft and provides an easy, quiet gear engagement.

https://truckmanualshub.com/

Folding Gear Lever (option)

Releasing Gear Lever

To fold the gear lever, follow this procedure:

DANGER

Before releasing the gear lever, apply the parking brakes and shut down the engine. Failure to do so can result in unexpected vehicle movement and can cause serious personal injury or death.

- Make sure the parking brakes are set
- To release the gear lever, pull the lever in toward the seat and press on the knob downward in a straight line.

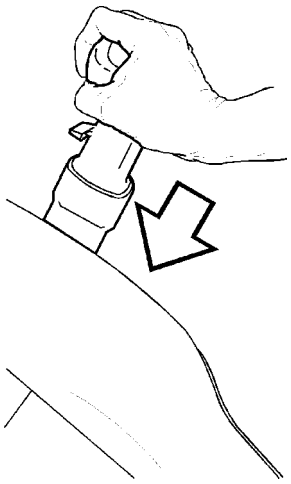
W4001388

- Twist the lever counterclockwise while holding pressure on the knob. When releasing the pressure, the springloaded lever will be pushed up out of the locked position.

W4001389

https://truckmanualshub.com/

- Lift and fold the gear lever straight back, parallel with the seat. It will come to rest in the folded position.

  NOTE! If the lever is not moved straight back, it may not be able to travel the full distance.

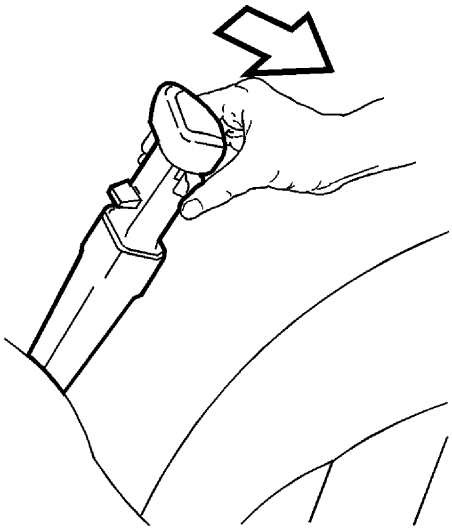

W4001390

Locking Gear Lever

To lock the gear lever in place, move it from the folded position forward until it is upright. Press down on the knob and twist clockwise until the knob is lined up straight.

DANGER

Make sure that the gear lever is securely locked in position before taking the vehicle on the road. Failure to do so can cause loss of control over the vehicle, leading to an accident with serious personal injury or death.

https://truckmanualshub.com/

Brakes

Brake Safety Information

DANGER

Do not inspect or adjust parts or components in the brake system without setting the parking brake, placing the transmission in neutral and securely chocking the wheels. If the vehicle is not secured to prevent uncontrolled vehicle movement, it could roll and cause severe personal injury or death.

DANGER

Do not use replacement parts anywhere in the brake system unless it conforms exactly to original specifications. A nonconforming part in your vehicle's brake system could cause a malfunction, leading to loss of control of the vehicle resulting in severe personal injury or death.

DANGER

Do not ride the brakes going down steep hills. The brakes could overheat and lose their effectiveness. Always choose a low gear before going down the grade and reduce speed to help control vehicle speed. Losing the brakes going downhill can lead to an accident causing serious personal injury or death.

DANGER

Do not operate the vehicle when there is a malfunction in the compressed air system. An air brake system with leaks or other malfunctions may prevent the brake system from operating properly. The vehicle should not be operated until the system is repaired and all brake circuits are working properly. Failure to repair the system can lead to loss of control of the vehicle resulting in severe personal injury or death.

DANGER

The brake system is a critical vehicle safety system. For your safety and for those around you, follow the recommended preventive maintenance checks. If any problems occur, have them investigated immediately by an authorized service facility. Failure to properly maintain the brake system can result in compromised brake efficiency and may lead to loss of control of the vehicle resulting in severe personal injury or death.

DANGER

Do not drive through deep water. The brake system can be affected so the braking efficiency is less or the brakes pull the vehicle to the side. This could lead to an accident leading to serious personal injury or death.

https://truckmanualshub.com/

DANGER

Do not release the parking brake or attempt to move the vehicle until brake air pressure in both circuits is at least 100 psi (690 kPa). Failure to follow this procedure may lead to uncontrolled vehicle movement and cause severe personal injury or death.

DANGER

Never release or drive a truck that has a brake discrepancy — no matter how minor — until it has been repaired or corrected. Failure to repair brake discrepancies can result in compromised brake efficiency and may lead to loss of control of the vehicle resulting in severe personal injury or death.

General

All Volvo vehicles are designed to meet or exceed all applicable federal brake standards and regulations. They use a dual circuit, compressed air system. It consists of two independent brake systems that use a single set of brake controls. Each circuit is supplied by its own compressed air tank. Both air tanks receive compressed air from the same supply tank (wet tank) and are charged with equal pressure. The two circuits are interconnected for the parking brake system.

Air pressures in the two circuits are monitored by two pressure gauges on the right side of the instrument cluster. The primary (rear) brake circuit gauge is marked with an "R" within a symbol and the secondary (front) brake circuit gauge is marked with an "F" within a symbol. The two pointers should register equal or nearly equal pressure. By observing the gauge pointers, the operator is forewarned in the event of a pressure drop in either or both of the circuits. See page 91 for more information.

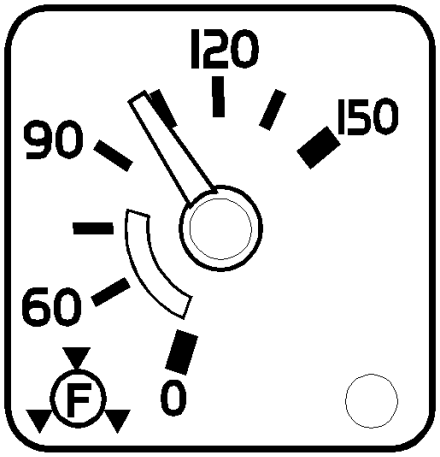

W3003637

Before operating the vehicle, check the air gauges which indicate air pressure. They should not register less than 105 psi (725 kPa). Maximum pressure at any time should not exceed 150 psi (1035 kPa).

https://truckmanualshub.com/

Both circuits are piped into a dual brake valve, which simultaneously applies front and rear axle service brakes during each brake application. In the event of a failure in either one of the circuits, the other circuit becomes the emergency circuit for applying the brakes.

W5000923

DANGER

The Master Warning Telltale and buzzer alerts of a dangerous situation. Air pressure is low and the remaining air volume may not be enough for repeated braking. The emergency brakes may engage, causing a wheel lock-up, loss of vehicle control and become a hazard to following vehicles. Bring the vehicle to a controled stop. Failure to follow these precautions can result in loss of braking control and serious personal injury or death can occur as a result of a vehicle accident.

W3000638

Master Warning Telltale

An important feature of the brake system is that an automatic spring brake application does not take place as a result of an air loss in only one of the two circuits. In this case, brake control remains in the foot brake valve. In each air pressure gauge, there is a warning light connected to a low pressure switch that comes on if air pressure goes below 60 psi (420 kPa). At the same time, the buzzer will sound and the main warning telltale will come on. This pressure drop warns the operator to make a manual emergency stop before an automatic emergency stop is made.

https://truckmanualshub.com/

Brake System Controls

The air compressor, governor, pressure regulator valve and reservoirs are control devices. Their function is to build up, maintain and control air pressure in the reservoirs. This is so that pressure is held constant between the minimum and maximum range established for air brake operation.

The brake valve, quick release valve, brake chambers and slack adjusters are application devices. They distribute the air pressure and convert its energy into the mechanical force necessary to apply or release the brakes.

Foot Brake Valve

The foot brake valve is directly connected to the brake pedal. The valve gives a progressive output against the pedal travel. This allows better control of the pressure in the first half of the pedal travel. In the last half of the pedal travel, the pressure output increase is faster.

W5000920

The foot brake valve applies the service brakes, incorporating both the primary and secondary air systems. The primary system controls the rear brakes and the secondary system controls the front brakes. The foot brake valve receives air from the compressed air tanks. Air pressure is then delivered to the wheel brake chambers as required by the amount of pressure exerted on the foot brake pedal. The brake chamber force then applies the wheel brakes.

https://truckmanualshub.com/

From the operator's viewpoint, operating the foot brake valve of a vehicle equipped with air brakes differs very little from the operation of a conventionally braked vehicle. Because the operation of the brake pedal requires scarcely more effort than depressing the average throttle pedal, air brakes are naturally much easier to control. If the driver gives full attention to the following suggestions, a little experience will make him/her thoroughly familiar with the air-controlled braking of this vehicle.

DANGER

Failure to observe these precautions can result in loss of brakes, loss of vehicle control, vehicle accident, and serious personal injury or death.

1 The best possible stop will be made when the first brake application is as firm as the speed and road condition permit. Then, ease off as the speed is reduced. *Never* apply the brakes lightly at first and increase the pressure as the speed diminishes.

2 Do not *fan* the brake pedal. Fanning gives poor brake performance and wastes air.

3 The air brake is designed so that when the brake pedal is fully depressed, an emergency application results. This application should be made only in an emergency situation.

https://truckmanualshub.com/

4 In making a stop or a slow-down, allow the transmission to remain in gear with the throttle closed, disengaging the clutch only when engine idling speed is reached.

5 When parking the vehicle, place the transmission in neutral and set the parking brake before shutting down the engine.

6 When descending a long grade, do not use the service brakes too long or too often. The brakes may overheat and lose their effectiveness.

7 Before descending a steep grade, the transmission should be shifted into a lower gear and the vehicle speed reduced. Other speed retardation devices should also be used if available (engine brakes, retarders or trailer hand control valves).

https://truckmanualshub.com/

Parking Brake/Trailer Supply Valves

Trucks/Tractors have two air control valves on the instrument panel:

- Trailer Supply (red octagonal knob)
- System Park (yellow diamond knob)

W5000924

The two air control valves are interconnected and interacting. The System Park valve supplies and controls the Trailer Air Supply valve.

The System Park valve knob (yellow) should be pushed in first, after sufficient air pressure is built up (apply foot brake to prevent vehicle from rolling). The Trailer Air Supply valve knob may then be pushed in.

The Trailer Air Supply valve knob and System Park valve knob will automatically pop out if the system pressure (both front and rear circuits) drops to 25 to 35 psi (170 to 240 kPa). The tractor protection valve will then close, the tractor spring brakes will apply and the trailer emergency system will be activated.

On vehicles equipped with the standard two valve system, the operation of one valve together with the other permits the operator to select the desired functions described below:

Red Valve (Trailer Air Supply)	Yellow Valve (System Park)	Function (Mode)
Out	Out	System Park
In	Out	Trailer Charge
In	In	Normal Running
Out	In	Bobtail

https://truckmanualshub.com/

Parking Brake Release

VN models have engines equipped with engine electronic control units (EECU). These have two features that may impact the brake system. One is the anti-stall device in the EECU which senses torque demand and automatically controls the engine to compensate and maintain speed. On tractors equipped with parking brakes on only one axle, the anti-stall device keeps the engine from stalling, allowing the driver to pull away with the brakes dragging. This may result in overheated brakes and damaged wheel hubs.

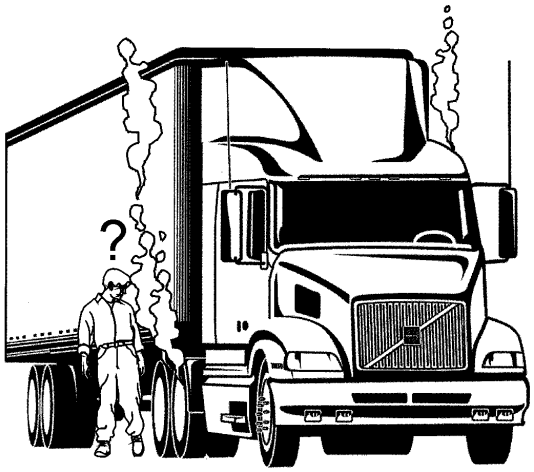

W5001114

WARNING

Continual dragging of the brakes will cause brakes to overheat. This may lead to wheel end fire. To avoid overheating, make sure both parking brake knobs are pushed in before driving off.

If the yellow knob is pulled out and the red knob is pushed in, a condition is created where the trailer parking brakes are not applied and only the single drive axle brakes are applied. In this condition, the vehicle can be driven away. Therefore, it is very important that the driver make sure the yellow AND red knobs are pushed in all the way before driving the vehicle.

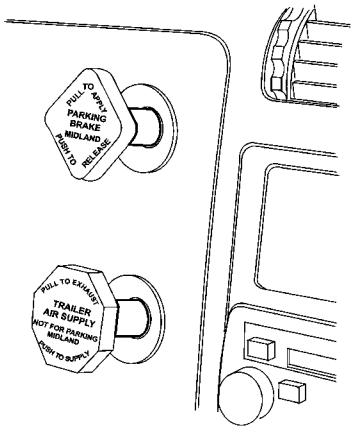

W5001116

Correct Driving Position: Both knobs fully in

https://truckmanualshub.com/

There is also an engine shut-down device in the EECU that shuts down the engine after a pre-programmed time in order to save fuel. This is activated when the yellow parking brake knob is pulled out. Therefore, some drivers park and release the parking brakes using only the red knob to keep the engine running. It is then easily overlooked that in a vehicle parked with both the yellow and red knobs activated, only the red knob is pushed in by habit.

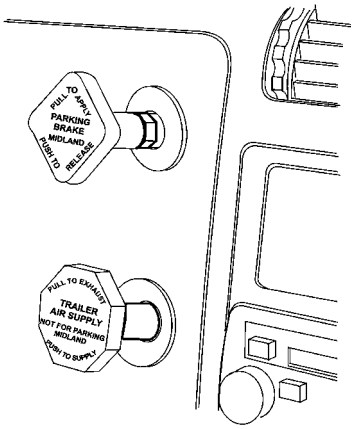

W5001117

Incorrect Parking or Driving Position

https://truckmanualshub.com/

Spring Brake For Parking

DANGER

Never leave the vehicle without being certain the parking brakes are set or that other precautions are taken to prevent the vehicle from rolling. Failure to do so can result in serious personal injury or death.

W5000643

The parking brake mechanism uses spring pressure as a separate power medium to apply the service brakes on the driving axles. The parking brake is released by the same compressed air source used to apply the service brakes. Since this brake is released by air pressure, the system must be charged to at least 60 psi (420 kPa) before the parking brake may be released.

The parking brake spring tension is sufficient to hold a fully loaded vehicle on maximum grades permitted on modern highways, provided the brake drums and linings are in good condition and the brakes are properly adjusted.

CAUTION

Do not use the spring parking brakes if the service brakes are hot, such as after descending a steep grade. Also, do not use the spring parking brakes during freezing temperatures if the wheel brakes are wet. To do so could damage the brakes, if hot, or may cause them to freeze during cold weather.

If the brakes are wet, drive the vehicle in low gear and lightly apply the brakes to heat and dry them. Allow hot brakes to cool before using the parking spring brakes.

https://truckmanualshub.com/

WARNING

Do not set the vehicle in motion if the parking brake is engaged. An alarm will sound if you do. Movement of the truck while the parking brake is set can cause brakes to overheat. This may lead to wheel end fire. To avoid overheating, make sure both parking brake knobs are pushed in before driving off.

There are several ways to determine if the parking brakes have been set. By pulling out the yellow knob:

- An audible rush of air will be heard when the parking brake knob is pulled. The air exhausts from the park brake valve itself and from the spring brake chambers on the rear axle(s).
- A black ring around the base of the yellow control knob will be seen.
- There will be a fluctuation in the air pressure gauge needles.
- You will not be able to pull the knob out any further.

DANGER

Do not attempt in any way to disassemble or tamper with the spring brake chamber. The force stored in the spring, if suddenly released, can cause personal injury or death.

DANGER

Do not apply the parking brake while the vehicle is moving. The rear wheels may lock up causing loss of vehicle control leading to an accident with personal injury or death.

https://truckmanualshub.com/

Trailer Brake Hand Control

DANGER

The trailer hand brake control is not a parking brake valve and must not be used as one. This brake is not designed to hold the vehicle stationary. Failure to follow these instructions can result in the unintentional movement of the vehicle and may cause personal injury or death.

W5001035

The hand control valve for the trailer brakes engages the trailer brakes independently from the vehicle brakes. The valve can be fully or partially engaged but in any partial position it will be overridden by a full application of the foot brake valve.

To supply air to the trailer brakes to slow the trailer down, pull the valve handle down. The farther the handle is pulled down, the more air pressure is applied to the trailer brakes. Releasing the self-returning handle releases the trailer brakes.

Air Tanks

WARNING

When draining the air tanks, do not look into the area of the draining air. Dirt or sludge particles may be in the air stream and could cause eye injury.

W5000601

Air tanks should be drained daily. Make sure the drain cocks close properly after draining. Empty moisture from air tanks by pulling the drain valve wire. The tanks should be checked for condensation fluid even if an automatic drain valve is installed.

https://truckmanualshub.com/

The “121” Brake Standard

This manual refers occasionally to “121” brakes. Although some operators believe “121” only applies to vehicles equipped with anti-lock devices, the “121” standard applies to all vehicles that are capable of on-highway operation.

The “121” requirement also covers alterations or changes to parts or systems related to the “121” standard once the vehicle has been placed in service. The owner and operator should be aware that it is a violation for any repair facility to make any part or component inoperative when it is required for “121” compliance.

Charging Air To Another Vehicle

There are many methods which may be used to charge the air system of another vehicle. Vehicles equipped with the standard two-valve system (trailer supply and parking brake) must use the following procedure when using the emergency trailer air line as an auxiliary air source, other than to charge the trailer air reservoirs.

DANGER

Before working on a vehicle, set the parking brakes, place the transmission in neutral, and block the wheels. Failure to do so can result in unexpected vehicle movement and can cause serious personal injury or death.

https://truckmanualshub.com/

Antilock Braking System (ABS)

The vehicle has a standard brake system, equipped with an electronic speed monitoring and control system, Antilock Braking System (ABS). ABS monitors wheel speed continuously but is not involved in controlling the wheel speed unless there is an emergency. In normal braking applications, the standard air brake system is in effect.

WARNING

For proper ABS operation, do not change tire sizes. The size of the tires installed during production are programmed into the electronic control unit. Installing different sized tires could result in a reduced brake force, leading to longer stopping distances or accidents.

There is a sensor installed in each wheel on a monitored axle. The sensors transmit information to the electronic control unit (ECU). The ECU interprets the signals and calculates wheel speed, wheel retardation and a vehicle reference speed. If the calculations indicate a wheel lock-up situation, a signal is sent from the ECU to the appropriate ABS modulator valve to reduce braking pressure. During emergency braking, the modulator valve alternately reduces, increases or maintains air pressure in the brake chamber to prevent wheel lock-up.

https://truckmanualshub.com/

During emergency or reduced-traction stops, fully depress the foot brake pedal until the vehicle comes to a safe stop. DO NOT PUMP the brake pedal. With the brake pedal fully depressed, the ABS will control all wheels to provide steering control and a reduced braking distance.

Although the ABS improves vehicle control during emergency braking situations, the operator still has the responsibility to change driving styles depending on the existing traffic, road and/or weather conditions. For example, the ABS cannot prevent an accident if the driver is speeding or following too closely on slippery surfaces.

The ABS control unit contains a self-testing program that is engaged each time the ignition is turned on. The operator can verify the testing by listening for the ABS modulator valves actuating twice in series. To increase the sound, hold down the foot brake pedal when the ignition is turned on. The self-test is not finished and the telltale will stay on until the vehicle has started to move. The wheel speed sensors are tested when the vehicle starts to move. If they test OK, the telltale will go out at approximately 7 mph (11 km/h).

WARNING

If any of the ABS telltales come on during driving or do not go out after a short time after turning on the ignition, take the vehicle to a Volvo Truck dealer to repair the ABS or brake system. The vehicle can still be driven with a problem in the ABS system. However, ABS will not be working and the standard braking system will be in effect.

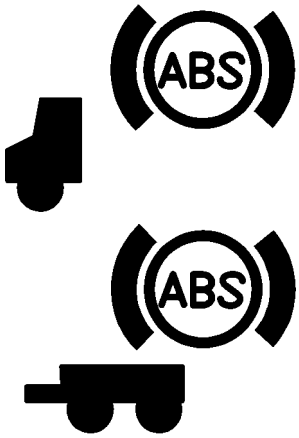

W3000905

https://truckmanualshub.com/

Traction Control System (TCS) (option)

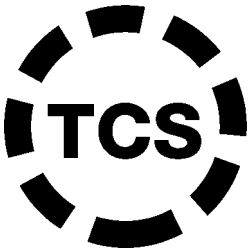

W3000962

The Traction Control System (TCS) uses the same wheel sensors as the ABS to determine if one set of drive wheels is spinning much more rapidly than the wheel set on the other side. If the TCS determines that a wheel is spinning (with vehicle speed below 25 mph [40 km/h]), it operates the brake system to apply some brake force to stop the spinning wheel(s). This puts the drive power over to the stationary wheel(s).

If vehicle speed is above 25 mph (40 km/h), a signal is sent to the engine ECU, which reduces the engine speed to be consistent with vehicle speed. This action helps reduce the amount of wheel spin and gives the operator greater vehicle control.

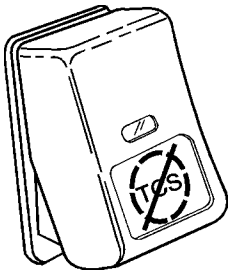

W3001336

The TCS includes a switch to turn of the function. When the switch is in the OFF position, the TCS operates normally to increase traction if the drive wheels are spinning. When the switch is pressed once, the TCS telltale in the instrument cluster blinks continuously, indicating that the TCS is in mud/snow mode.

The mud/snow mode increases available traction on soft surfaces like snow, slush or mud by slightly increasing the allowable wheel spin. This prevents the wheels from getting bogged down. The TCS will resume normal operation when the TCS switch is pressed again and the TCS telltale goes out or when the ignition is turned off.

CAUTION

Do not engage the differential locks while wheels are spinning. Serious damage to the differential will occur. See page 311 for more information.

https://truckmanualshub.com/

Vehicle Speed Retardation Devices

DANGER

When operating a tractor bobtail (without a trailer) or on slippery roads, the engine brake switch must be in the "**OFF**" position. Failure to follow this instruction can result in loss of vehicle control and serious personal injury or death.

WARNING

A vehicle speed retardation device (such as a "Jake-Brake," "C-Brake," "Exhaust Brake," etc.) is **not** intended to bring the vehicle to a stop. A vehicle speed retardation device is only intended to retard the vehicle speed under certain conditions.

NOTE! If a Volvo engine is equipped with a Volvo Engine Brake, the brake will not operate with full power until the engine coolant temperature has reached 110°F (45°C).

NOTE! It is *normal* for there to be a slight delay in the application of a vehicle speed retardation device. When using devices of this type, be sure to *think ahead* and *analyze* conditions in order to use the device properly.

https://truckmanualshub.com/

Volvo Exhaust Brake

The exhaust brake is standard on the Volvo D12 engine. It is used to reduce wear on the brake linings. The exhaust brake is most effective at high engine speeds (1,500 to 2,300 r/min). The exhaust brake is automatically disengaged if the engine speed drops to or below 1,100 r/min.

The exhaust brake works by containing the exhaust gases in the exhaust manifold, thereby making the engine work against the back pressure. This provides a retarding force on the drive wheels.

The exhaust brake is operated by a two-position switch in the right-hand switch cluster. For the exhaust brake to function, the following must be in effect:

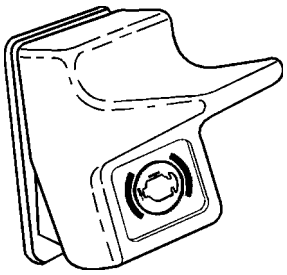
W3001324

- The switch is ON
- Accelerator and clutch pedals are fully released
- Engine speed exceeds 1,100 r/min

When the cruise control is engaged, the exhaust brake automatically engages if the selected cruise speed is exceeded by approximately 5 mph (8 km/h). The exhaust brake is then disengaged when the speed has returned to approximately 3 mph (5 km/h) above selected cruise speed.

NOTE! For both exhaust and engine brakes, use a “one gear” driving strategy when going downhill to keep engine speed up for effective braking (for example: uphill 7th gear and downhill 6th).

https://truckmanualshub.com/

Volvo Engine Brake (option)

The Volvo Engine Brake (VEB) has a higher braking effect than the exhaust brake. The engine brake is most effective at high engine speeds (1,500 to 2,300 r/min). It is automatically disengaged if engine speed drops below 1,100 r/min.

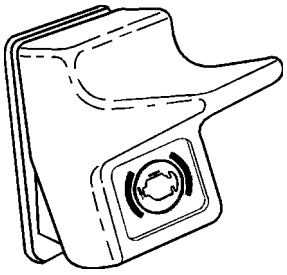
W3001324

The engine brake function is operated by one switch in the right hand switch cluster. It works together with the exhaust brake to provide two levels of braking power. The switch has three positions: OFF, LOW and HIGH. With the switch in position LOW, only the exhaust brake is engaged. With the switch in position HIGH, both the exhaust brake and the compression brake are activated. For the engine brake to function, the following must be in effect:

- The switch is ON
- Vehicle speed over 7.5 mph (12 km/h)
- Engine temperature over 110°F (43°C)
- Accelerator and clutch pedals are fully released
- Engine speed over 1,100 r/min

When the cruise control is engaged, the engine brake automatically engages if the selected cruise speed is exceeded by approximately 5 mph (8 km/h). The engine brake is then disengaged when the speed has returned to approximately 3 mph (5 km/h) above selected cruise speed.

Too Cold for Engine Brake (Volvo Engine Only)

Position 2 of the engine brake should not be switched on until the engine has become warm (over 110°F [45°C]). If position 2 is selected and the engine is too cold, this symbol will be shown (however, VEB is not activated).

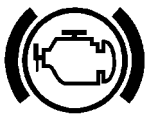
T3009355

https://truckmanualshub.com/

Jake-Brake Or C-Brake

The Jake-Brake or C-Brake is optional equipment for Cummins and Detroit Diesel engines. These engine brakes are similar in operation. Three power levels are available by engaging 2, 4, or 6 cylinders when braking. (For Cummins M11, only two power levels are available.)

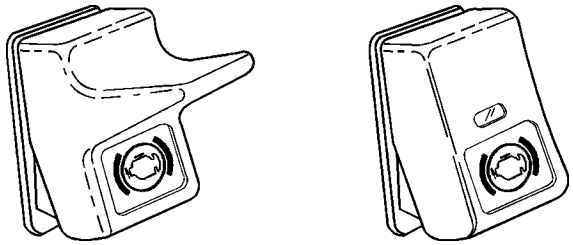

W3002303

It is operated by two switches in the right hand switch cluster. It works together with the exhaust brake to provide two levels of braking power. The left switch is the ON/OFF switch. The desired braking power is selected with the right switch which has three positions: LOW, MED. and HIGH (for Cummins M11, only LOW and HIGH).

For the exhaust brake to function, the following must be in effect:

- The switch is ON
- Vehicle speed over 7.5 mph (12 km/h)
- Engine temperature over 110°F (43°C)
- Accelerator and clutch pedals fully released
- Engine speed exceeding 1100 r/min

When the cruise control is engaged, the exhaust brake automatically engages if the selected cruise speed is exceeded by approximately 5 mph (8 km/h). The exhaust brake is then disengaged when the speed has returned to approximately 3 mph (5 km/h) above the selected cruise speed.

For more information, read the Jake-Brake or C-Brake operator's manual.

https://truckmanualshub.com/

Electrical System

General Safety Guidelines

WARNING

Failure to repair a malfunction in the electrical system can result in serious damage to vehicle or fire. Always let an experienced electrical technician perform repairs.

WARNING

Always wear eye protection when working around batteries to prevent the risk of injury due to contact with battery acid.

WARNING

Always replace fuses and circuit breakers with the same current/amperage rating. Never substitute a fuse with foil, wire or nails. Increasing fuse or circuit breaker ratings or substituting a fuse with foil, wire or nails may result in electrical circuit overheating and possible fire and injury.

CAUTION

Electronic circuits and components are designed to sense voltage differences smaller than 1 volt. While static electricity is not normally dangerous to humans, it can seriously damage electronic circuits and components. Circuit boards mounted in the instrument cluster, for example, may not fail immediately after being hit with a static discharge. Rather, they may work for a while and then fail for no apparent reason. Therefore, always work with proper grounding straps and antistatic mats around electric components.

CAUTION

Today's vehicles contain a high number of electronic devices. It is very important to exercise caution when working on a modern electrical system, charging batteries or jump starting the engine. To minimize the risk of any damage to the electronic components, follow the procedures below when work is being done to the electrical system.

NOTE! Do not work on the electric system without proper tools and training. Repair work to the electrical system must be done by trained professionals. Your Volvo Truck dealer has the right tools and trained technicians.

https://truckmanualshub.com/

Charging System

An alternator with an integrated regulator is used to supply power to the vehicle electrical system. The charging system voltage should be checked periodically to prevent overcharging or undercharging the batteries and to detect any voltage drop in the wiring.

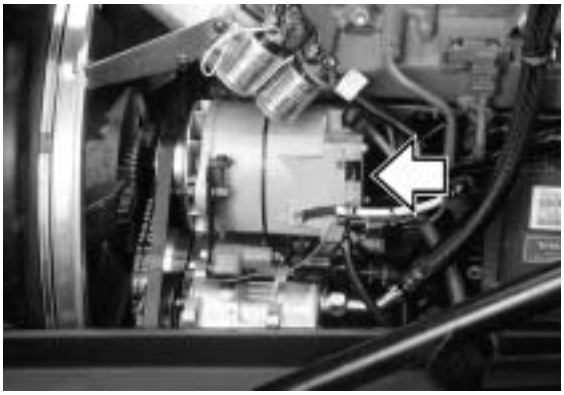

W3000978

Battery Box

DANGER

When inspecting or cleaning batteries, never smoke or expose batteries (or the areas around them) to sparks or flames. The battery area may contain an explosive gas mixture that can ignite, causing an explosion, leading to serious personal injury or death.

W8002032

WARNING

Battery posts, terminals and related accessories contain lead and lead compounds, chemicals known to the State of California to cause cancer and reproductive harm. Wash hands after handling to prevent personal injury.

WARNING

Always wear eye protection when working around batteries to prevent the risk of injury due to contact with sulfuric acid or an explosion.

https://truckmanualshub.com/

On a vehicle with air fairings, batteries can be checked through the access door. For full access, the fairing needs to be removed.

To remove the fairing, remove the two hex bolts in the corners of the step and the four screws to the cab. The whole panel can now be removed.

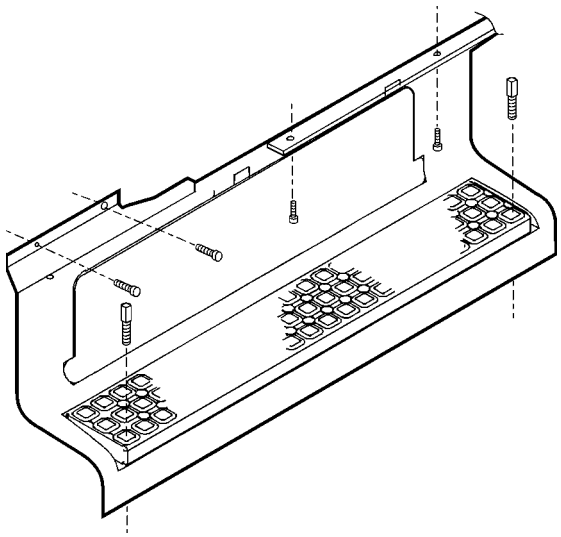

https://truckmanualshub.com/

On a vehicle without air fairings, the battery cover is also a base for the cab steps. To remove the cover, unhook the two rubber latches and lift the cover up and out.

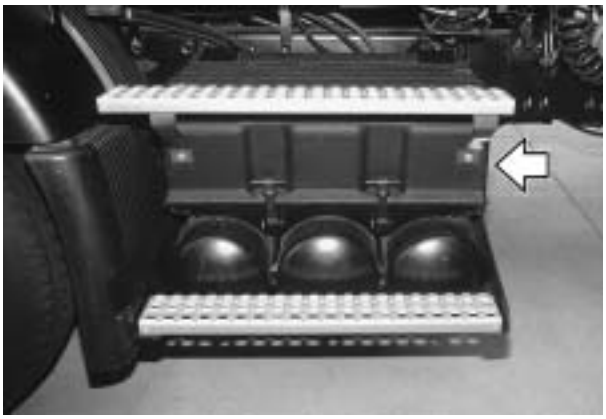

W3002421

DANGER

When installing the battery cover, make sure it is resting properly on the box before fastening the latches. Faulty installation may cause the cover to shift when the steps are used, which may lead to a fall, causing serious personal injury or death.

There may be three or four batteries installed. Always make sure the batteries are fastened properly in the box.

When disconnecting battery terminals, always disconnect the main ground terminal first. When reconnecting, always connect the main ground terminal last.

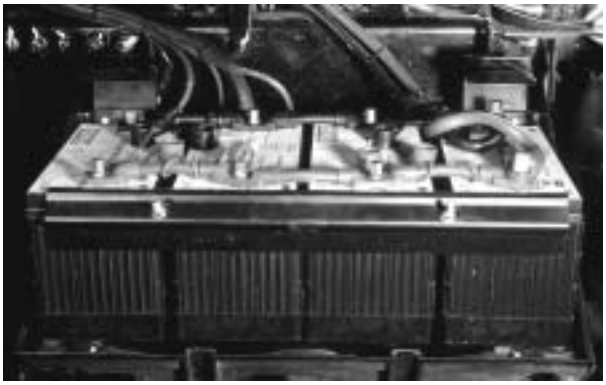

W3002368

https://truckmanualshub.com/

Battery Jump Starting and Charging

To access the batteries on a vehicle equipped with side fairings, open the fairing access cover. On the second battery from the front there are special, longer posts installed to accept jumper cables.

W3000980

When jumping batteries to start an engine, it is important that the jumper cables are connected directly from one set of batteries in one vehicle to the other set of batteries in the other vehicle (unless vehicle is equipped with optional Emergency Start System). This way the cranking current is carried through the proper starter wiring.

Connect the jumper cables to the positive, or "hot" terminal first and ground terminal last. When disconnecting the cables, disconnect the ground terminal first. Connect the jumper cable clamps to the discharged battery first and to the booster battery last. Avoid creating sparks by making all connections quickly and firmly. Do not permit vehicles to touch each other when jump starting.

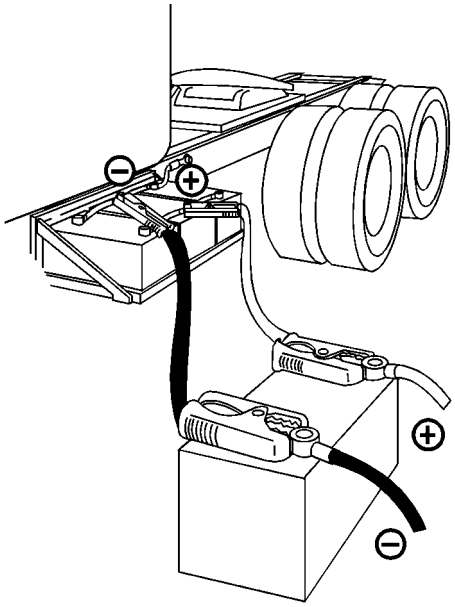

W3002432

DANGER

Do not attempt to jump-start a vehicle equipped with Delco Maintenance Free batteries if the test indicator is light yellow. Replace the battery instead. Jump-starting may cause battery to explode causing skin burns from acid or serious personal injury or death.

WARNING

Always wear eye protection when working around batteries to prevent the risk of injury due to contact with sulfuric acid or an explosion.

https://truckmanualshub.com/

Charging the Battery

High voltage machines that are used for work on the vehicle can do damage to the electrical system, especially to its electronic components. Welding or quick-charging machines subject the wiring to excessive voltage, which may often result in damage to electrical and electronic components anywhere on the vehicle.

CAUTION

Attempting to work on electronic components without proper equipment can damage internal parts with static electricity.

Do not work on the electrical system without the proper tools and training. Repair work to the electrical system must always be done by trained professionals. Your Volvo Truck dealer has the right tools and trained technicians.

Jump Starting the Engine

If the batteries are discharged to the point where they do not have enough stored energy to start the engine, they should be recharged using a low charge current, **not to exceed 16 volts**.

If the vehicle needs to be started immediately, use starting batteries. Connect the batteries according to the information on the previous page.

DO NOT use battery chargers with “boosting” capability. These produce a high voltage current that will cause damage to the vehicle electrical and electronic components.

https://truckmanualshub.com/

Electronic Components

CAUTION

Electronic circuits and components are designed to sense voltage differences smaller than 1 volt. While static electricity is not normally dangerous to humans, it can seriously damage electronic circuits and components. Circuit boards mounted in the instrument cluster may not fail immediately after being hit with a static discharge. Rather, they may work for a while and then fail for no apparent reason. Therefore, always work with proper grounding straps and antistatic mats around electronic components.

Welding

CAUTION

Welding on the vehicle can damage the electrical system or components due to the high voltage and current spikes that normally occur when welding. It is preferable to avoid welding on an assembled vehicle. However, if any structure on or in contact with the vehicle must be welded, follow the recommendations below.

https://truckmanualshub.com/

CAUTION

If there are other ground cables connected to the battery (such as engine ECU, etc.), disconnect those ground cables first, then remove the main battery ground cable. Electronic modules may be damaged when additional grounds are connected/disconnected without the main battery ground connected. Disconnect the main battery ground **last**.

Before welding on the vehicle, electrical power needs to be disconnected and some components must also be disconnected:

- Disconnect both the negative (-) and positive (+) battery cables. Disconnect the negative cable first. Reconnect the positive cable first.
- Disconnect engine/starter ground from the chassis. This connection is located outside the left hand frame rail in the engine compartment.
- Disconnect the power harness and vehicle interface harness at the engine electronic control unit (EECU).
- If the vehicle is equipped with systems that have their own ECUs (such as the vehicle ECU (VECU), ABS system, air bag or some transmission systems), disconnect each ECU at their electrical connection.
- Disconnect the electrical connections at the rear of the instrument cluster.
- Reposition or shield any parts that would be damaged by high temperatures.

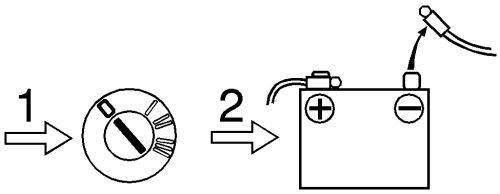

T8006862

https://truckmanualshub.com/

- Attach the welder ground cable as close to the weld area as possible (6” or less).
- Do not connect the welder ground cable to the EECU or its cooling plate.
- Welding cables should not be allowed to lay on, near or cross over any electrical wiring or electronic component during the welding procedure.
- After finishing welding and the welded areas having cooled, inspect wiring and components for possible shorts or damage. In the event of a short circuit, excessive current will be drawn when the batteries are reconnected, causing more damage to the electrical system.

CAUTION

Do not weld on the engine or engine components. Welding on the engine or components mounted on the engine can cause serious damage to the engine ECU.

https://truckmanualshub.com/

Battery Protection System (option)

An electronic battery monitor (“Battery Lifeguard”) may be installed in the electrical center. This monitor will disconnect certain circuits if it senses that the battery voltage falls under a safe charging level.

Before disconnecting, the monitor will sound a loud and distinct alarm, alternating long and short beeps, for approximately 60 seconds.

At the end of the alarm, the monitor disconnects circuits to protect the batteries. When the batteries are charged, either through the vehicle alternator or a connected battery charger, the monitor will automatically restore power to the disconnected circuits.

Disconnected circuits are connected to fuse positions F15 through 35. These circuits are primarily feeding the sleeper area and headlights.

Unless the batteries are held at an elevated voltage for several hours, they will only develop a “surface” charge. That charge will quickly go away and the relay will retrip.

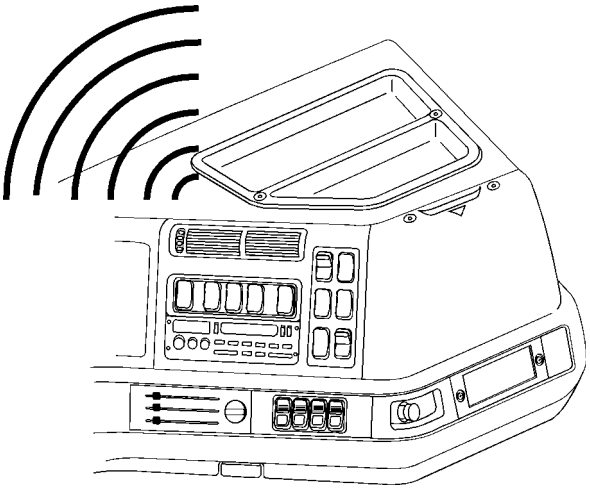

W3002365

https://truckmanualshub.com/

Electrical Center

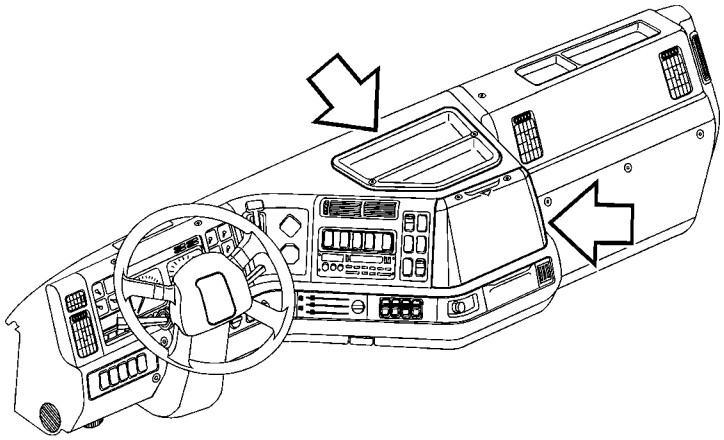

W8000923

The electrical center is located in the middle of the dash. All the relays and fuses in the cab are collected here. The cover panels are fastened with screws that can be turned with a coin. Since the function of some fuses or relays may change for the vehicle application, refer to the list of functions that is attached to the underside of each panel.

All fuses and relays are accessible under the top cover.

W3002514

Fuses are standard. Reset breakers are available as an option for some circuits. If a fuse continues to melt or disconnect, the circuit has a malfunction and must be repaired.

If a breaker disconnects, the ignition or main switch must be switched off before the breaker resets.

WARNING

Failure to repair a malfunction in the electrical system can result in serious damage to electrical components and vehicle fire.

https://truckmanualshub.com/

The fuses and relays are all accessible under the top cover on the dash.

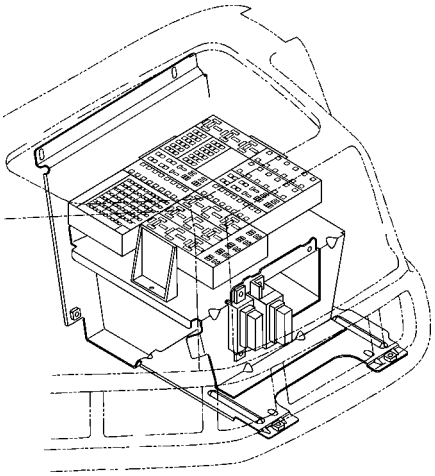

W3002526

One type of fuse in the new electrical center are termed “mini-fuses” and require a puller tool to remove from the fuse block. The puller tool is part of the Owner’s Package. To order a new puller, specify part number 20378326.

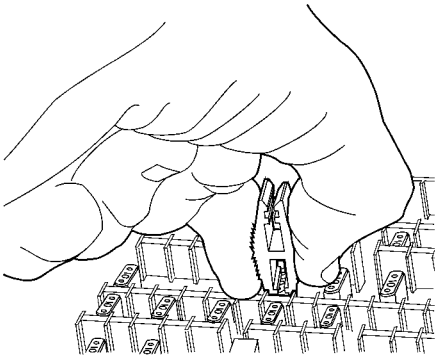

W3002525

Mini-fuse puller tool

https://truckmanualshub.com/

Power Studs

On the passenger side of the dash are power studs for a CB hook-up. These studs are standard equipment. For a proper hook-up, use fork type connectors on the wires or use “banana” plugs.

W3002001

CAUTION

If stripped wire ends are used, make sure there are no wire strands that can bridge between the studs.

The *red* stud is the positive terminal and the *black* stud is the ground terminal. Power from the studs must not exceed a 10 amp draw. Before connecting any electrical accessory, make sure it is made for 12 V operation.

The top tray is available as a CB mount with a strap to hold different size radios securely in place.

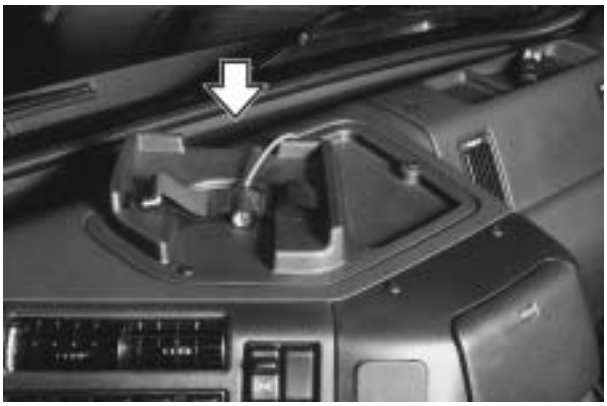

W8001876

https://truckmanualshub.com/

12 Volt Power Outlets

There are a number of 12 V outlets that can be accessed in the cab or the sleeper area. On the dash, there are cigar lighter and CB power studs as possible 12 V outlets.

In the VN-610 and VN-660 sleeper, there is an unswitched power outlet on the sleeper control panel. The outlet is covered by a cap that is pulled out for access.

The outlet is made for a cigar lighter type plug.

On the panel is also a cigar lighter that can be used for an additional 12 V outlet.

W3002430

In the VN-770 sleeper, there are the same panel mounted outlets as for the VN-610 as well as outlets in the cabinets. For the driver side cabinet, the two outlets are switched. The switch is located on the sleeper control panel and is used for switching off a refrigerator if the vehicle is parked for a longer time.

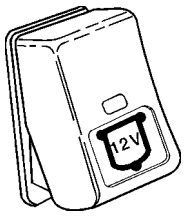

W3002333

Outlets in the passenger side cabinets receive unswitched power. Normal accessories for this cabinet will have on/off switches of their own.

The cabinet 12 V outlets have cigar lighter type plugs.

W3002000

https://truckmanualshub.com/

120 Volt System and Outlets

The VN-610, VN-660 and VN-770 are available with an optional 120 V service, used for longer parking while still living in the vehicle. The 120 V service is supplied from outside sources.

DANGER

When parked on wet ground, avoid using an external power source to connect the cab power plug. Water is a conductor of electricity. Personal injury or death resulting from electrical shock can occur in wet conditions.

To hook up the service, there is a socket (1 - lower illustration) located under the driver side door. If the vehicle is equipped with an engine heater, the socket for cab power is on the bottom.

W3001996

Power goes through a breaker box (2) located on the front wall in the driver side luggage compartment. On the right is an ON/OFF switch and on the left is the ground fault interrupter. The controls are also reached from the inside of the cab through the hatch under the mattress or cushion.

W3001999

https://truckmanualshub.com/

From the breaker box, power goes to three outlets. One is on the driver side bunk box (4). There is one outlet in each tower cabinet in the middle compartment (3 and 5).

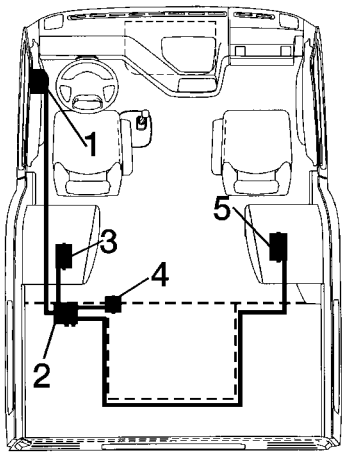

W3002367

https://truckmanualshub.com/

Changing Headlight Bulb

The headlight bulb can be accessed from the rear of the headlight assembly. Raise the hood. Remove the clamps from the back of the headlight box by lifting and pushing them to the side. Remove the cover.

Remove the terminal from the back of the bulb by bending up the lock tabs and pulling back at the same time. Turn the lock ring counterclockwise and remove. Pull out the bulb.

W3002422

NOTE! When removing the new bulb from the box, do not touch the glass with fingers or anything that may put grease on the glass surface.

Install the bulb and line up with the location tab by turning it and then push it in until fully seated. Install the lock ring. Push the terminal back on. Check that the rubber seal is clean and then install cover and snap the clamps over it. Make sure to use the correct replacement bulb.

W3002424

https://truckmanualshub.com/

General

The power steering consists of an integrated gear and hydraulic power cylinder, and a power steering pump with fluid container. The pump, driven by the engine, provides hydraulic pressure to the power steering. If the engine is not working, the steering is only manual. With the power steering not working, the effort required to turn the steering wheel is much greater than with power assist. If the power steering assist fails, bring the vehicle to a safe stop. Do not drive the vehicle until correcting the cause of the problem.

DANGER

Do not drive the vehicle without power assisted steering. When the power assist has failed, the effort to turn the steering wheel is much greater, especially in sharp turns or at low speeds. This can cause an accident and lead to serious personal injury or death.

While operating the vehicle, avoid ruts and obstructions which cause a binding condition on the sides of the front wheels. Drive the vehicle out of the rut, then turn the steering wheel. If possible, avoid turning the wheels while the vehicle is at a standstill as this places a considerable load on the power steering system and front axle.

https://truckmanualshub.com/

Periodically check the power steering fluid reservoir and keep it filled to the proper level with the recommended fluid. See the "*Operator's Manual, Maintenance and Engine*" for more information.

There is also a filter inside the reservoir that needs to be changed every 12 months.

W6000874

Adjustable Steering Column (option)

The steering column is fixed as standard. An adjustable steering column is available as an option. The adjustment device is operated by a pedal on the left side of the floor. To make adjustments, depress the pedal and move the steering column to the desired position and then release the pedal.

W6000876

DANGER

Do not try to make adjustments to the steering wheel while the vehicle is moving. Make all adjustments before starting to drive to prevent loss of vehicle control and personal injury or death.

https://truckmanualshub.com/

Axles

Differential Locks

The drive axle(s) may be equipped with differential locks. The single drive axle will only have a wheel differential lock. With tandem drive axles, there could be both wheel differential locks and an inter-axle differential lock.

CAUTION

Never operate the vehicle with the differentials locked any longer than is necessary as this places a great strain on the axles and may cause rapid tire wear.

The differential lock should be used on icy or slippery surfaces. As soon as the slippery surface has been passed, the differential lock should be disengaged.

Differential locks must not, under any circumstances, be engaged when in a wheel-spin situation. Engage the locks ahead of the slippery area. If already slipping, stop the wheels, engage the locks and then continue. If the differential locks are engaged when the wheels are spinning, the differential will be damaged and the rear axle drive unit could possibly fail.

https://truckmanualshub.com/

Engaging the differential locks must always be done in the following way (see page 110 for switch location):

1 Depress the clutch pedal. Wait for the drive wheels to stop spinning
2 Engage the differential lock
3 Engage a suitable gear
4 Carefully release the clutch pedal

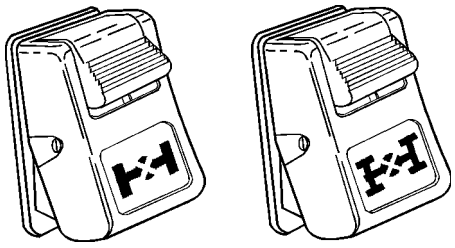
W3001991

Under normal traction conditions, do not engage the differential locks. If at all possible, do not use the differential locks while taking a curve. With good traction and the differential locks engaged, the vehicle will be understeered and therefore will tend to drive straight in a curve. If the locks must be used on good traction surface, drive cautiously and do not exceed 25 mph (40 km/h). Disengage the locks as soon as possible.

When the differential locks are disengaged, the couplings may be under tension. Disengage the locks by returning the switch to the OFF position. Help with the disengagement by briefly letting up on the accelerator to relieve the torque on the couplings.

The telltales for the differential locks are in the instrument cluster. See page 86 for more information on the telltales.

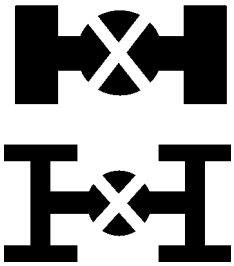
W3000904

https://truckmanualshub.com/

Wheels

General

Due to the size, equipment needed and the procedures used to change wheels, this should be done through the Volvo Truck dealer. By having an expert technician perform this procedure, personal injury and property damage may be avoided.

NOTE! When replacing the wheel equipment or tires, use the same size wheels or tires as originally manufactured. Changing the tire or wheel size will affect brake performance. If changing tire size, ABS and speedometer must be recalibrated.

Check Tightening Wheel Nuts

DANGER

Failure to properly torque-tighten the wheel nuts can result in the breakage of wheel studs and the subsequent loss of wheels. Loss of vehicle control and serious personal injury or death could occur.

Check tighten *all* wheel nuts after the first 50 to 100 miles (80 to 160 km) and the first 50 to 100 miles (80 to 160 km) after each tire service. This applies to both single and dual wheels in connection with normal service but should be performed at least every six months.

This check tightening is particularly important when rims or brake drums are newly painted. Paint can flake off from these surfaces, causing the nuts to lose their grip and the wheel to loosen.

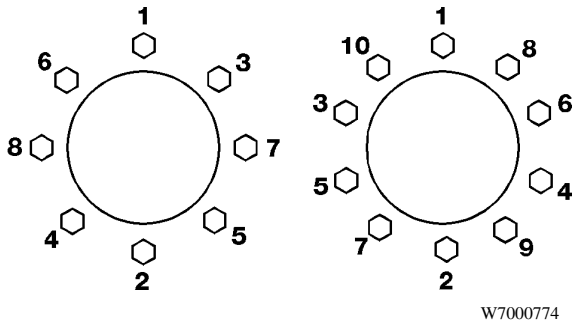

8 and 10 stud wheelnut tightening sequence.

https://truckmanualshub.com/

Inflating Tires

Always check inflation pressures when the tires are cool, using an accurate tire pressure gauge. Check the pressures at regular intervals.

W7000437

CAUTION

Never bleed the air from hot tires. Increased tire pressure measured in a hot tire is normal. Lower than recommended pressures may cause side wall flexing resulting in increased tire heat. This may cause premature tire failure.

DANGER

Tires and wheels must be serviced only by a qualified technician. Do not attempt to perform this work yourself. Inflated tires on wheels contain compressed air and if suddenly released, do so with an explosive force. Serious personal injury or death can occur.

For specific information and warranty on rims and tires, contact the tire manufacturer's distributor. Check tires for abnormal wear. Also, check the tread depth.

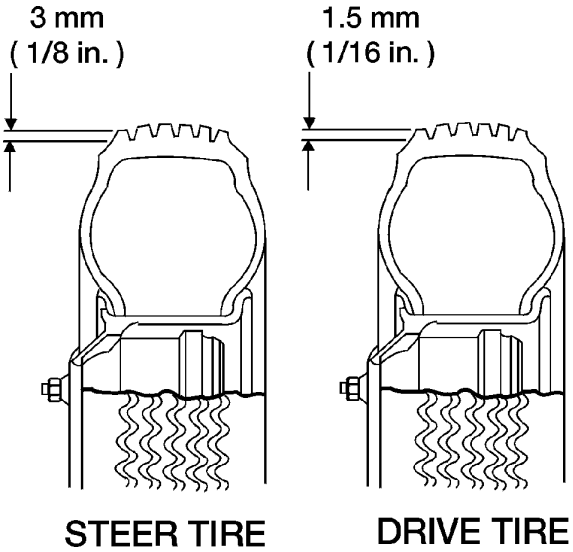

W7000773

https://truckmanualshub.com/

Wheel Bearing Adjustment

For reliable operation and adequate service life, the wheel bearings must be properly adjusted and checked during the service period. Loose wheel bearings could cause premature tire wear and possibly affect vehicle handling. See your Volvo Truck dealer for proper servicing.

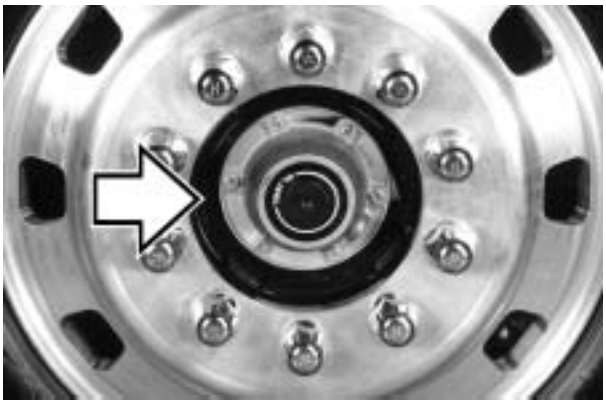

W7000438

Watch carefully for oil leaks and listen for unusual noises. These are indications of worn bearings, bad seals or misadjusted bearings. These are problems which must be corrected as soon as possible.

DANGER

Failure to keep wheel bearings properly adjusted may result in accelerated tire wear, poor handling and wheel separation from the vehicle.

Failure to properly maintain bearings can ultimately result in loss of wheel and vehicle control, and cause serious personal injury or death.

https://truckmanualshub.com/

Fifth Wheel General Information

The standard fifth wheel is manufactured by ASF. Other fifth wheels available as options are Holland and Fontaine.

Things to think about with trailer hook-up:

- Check the load distribution between axles.
- Always chock the trailer wheels.
- Grease the plate. No grease on the plate will produce heavy steering.
- Verify visually that coupling has occurred.
- Verify visually that plungers have locked on slider.
- Check for slack between the 5th wheel and the trailer kingpin.

DANGER

Always have all fifth wheel maintenance and repairs done by a qualified technician. An incorrect repair can cause the trailer to separate from the tractor causing an accident with serious personal injury or death.

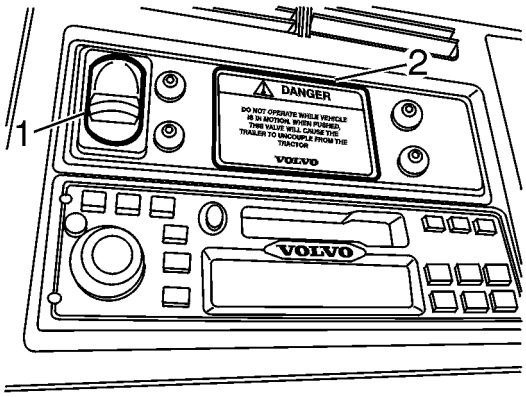

W9000494

1 Kingpin lock air release switch.
2 Danger.

https://truckmanualshub.com/

Fifth Wheel Kingpin Lock Release Switch Operation:

DANGER

Activation of the kingpin lock release switch ONLY unlocks the kingpin latch mechanishm. To relock the latch mechanism, you MUST pull forward and then back up to re-engange the kingpin lock mechanism. Failure to follow these instructions can result in separation of the trailer from the tractor causing personal injury or death.

- Park the vehicle and apply parking brake for tractor trailer.
- Put gearshift in neutral and chock trailer wheels.
- Lower trailer landing gear to ground.
- Disconnect air/electric lines to tailer.
- To release the fith wheel kingpin lock, push the switch up. This will release the locking mechanism. Once activated, the switch will not relock the fifth wheel kingpin locking mechanism.
- Release parking brake and drive tractor 12 inches away from the kingpin.
- Deflate air suspension by pressing bottom of suspension switch.
- After suspesion lowers, pull clear of trailer and reinflate suspension. See: “Suspension Level” page 111.
- The fifth wheel kingpin lock will only relock if you follow the complete recoupling procedures. See: “Trailer Coupling Procedures” page 323.

https://truckmanualshub.com/

Safety Information

Follow the instructions on the advisory labels attached to the various manufacturers' fifth wheels. An operator's manual from the manufacturer is supplied with each fifth wheel and is provided in the Owner's package.

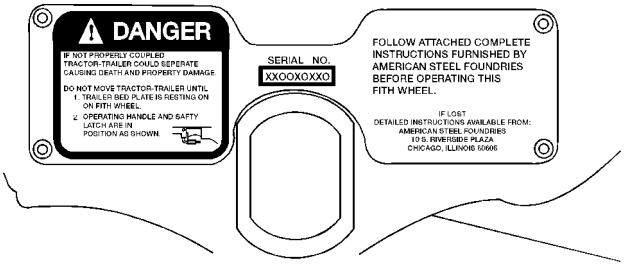

W9000183

If the fifth wheel is equipped with a sliding mounting, follow the advisory labels attached to the component. Also, read the literature provided by the manufacturer.

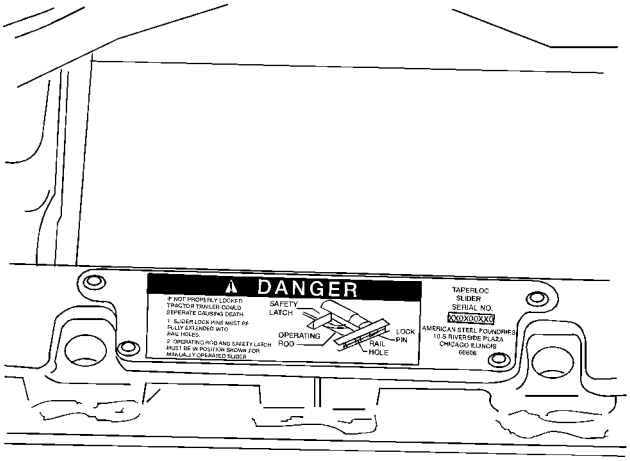

W9000185

DANGER

Always keep the fifth wheel plate well lubricated to prevent binding between the tractor and trailer. A binding fifth wheel could cause erratic steering and loss of vehicle control that may result in serious personal injury or death.

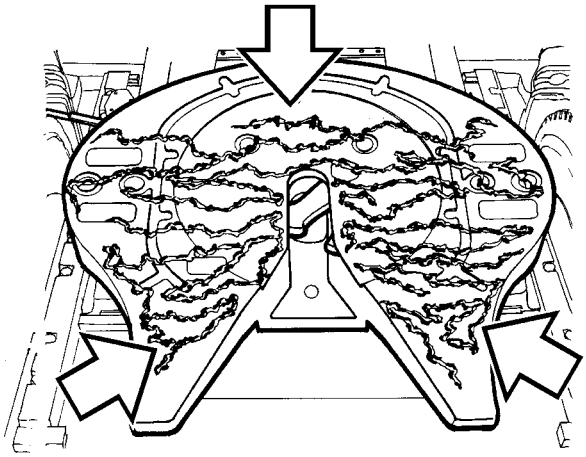

W9000198

https://truckmanualshub.com/

Fifth Wheel

There are three operating positions for the fifth wheel locking mechanism (ASF fifth wheel is shown):

Locked — This is the position that the fifth wheel will be in with a trailer hooked up. In the locked position, the operating rod is retracted and the safety latch will freely swing back and forth.

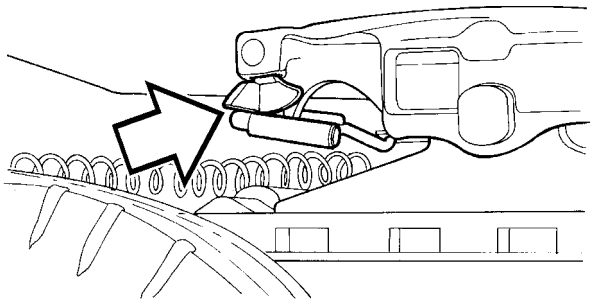

W9000180

Lockset — This is the position the fifth wheel is in when uncoupling the trailer. To achieve the lockset position, the operating rod is pulled out with a slight upward motion. The operating rod shoulder will catch on the plate casting. The safety latch is rotated toward the rear of the fifth wheel.

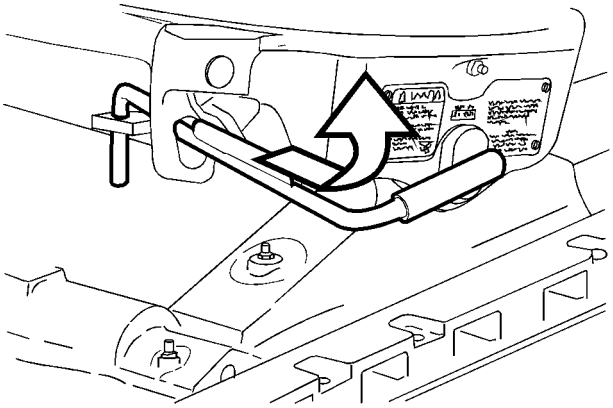

W9000242

Open — This is the position the fifth wheel is in after the trailer is uncoupled. The jaw is open and the operating rod is now dropped down and can be freely moved around. The safety latch is rotated toward the rear of the fifth wheel. This is the position the fifth wheel must be in when being coupled to a trailer.

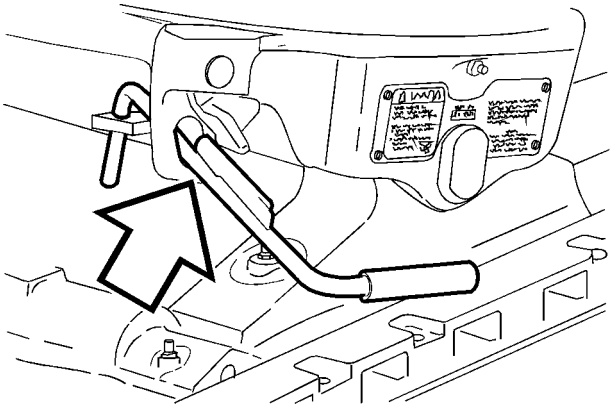

W9000203

https://truckmanualshub.com/

Fifth Wheel Slider (option)

The fifth wheel comes standard with an air operational slider. To remain within legal weight limits, this feature allows the driver to distribute the load easily on the axles.

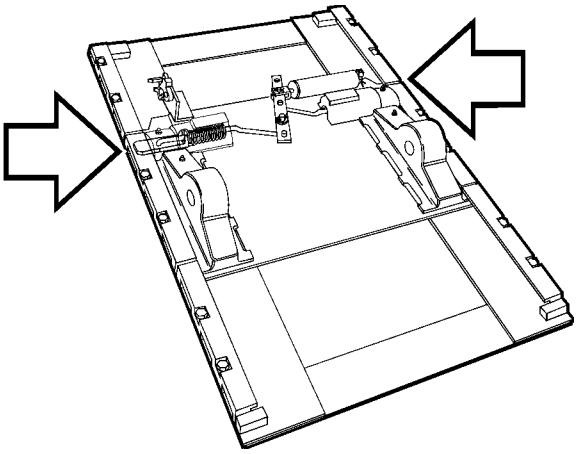

The air operated slider takes the work out of adjusting the tractor for various trailer loads. The fifth wheel portion is easily adjusted, even with a fully loaded trailer connected.

Movement between the adjustable saddle plate and the stationary base plate rail can result in wear, causing longitudinal, latitudinal and vertical slack. Field repairs can be made to reduce this slack for additional service life.

https://truckmanualshub.com/

Unlocking the Fifth Wheel

Always check out the entire fifth wheel equipment before attempting to couple to a trailer (ASF fifth wheel is shown):

- If not lubricated properly, add grease to the top of the fifth wheel plate.
- Make sure the mounting of the fifth wheel to the frame is tight and in good condition.
- If using a sliding fifth wheel, make sure the slide locking plungers are in a locked position.

The following instructions are for preparing the fifth wheel for coupling to a trailer:

Rotate the safety latch toward the rear of the fifth wheel.

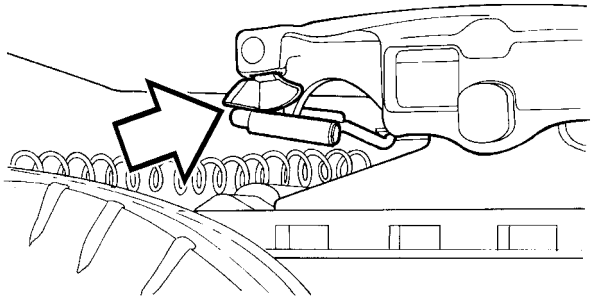

W9000180

Using a slight upward motion, pull the operating rod out until the operating rod shoulder is outside the fifth wheel operating slot.

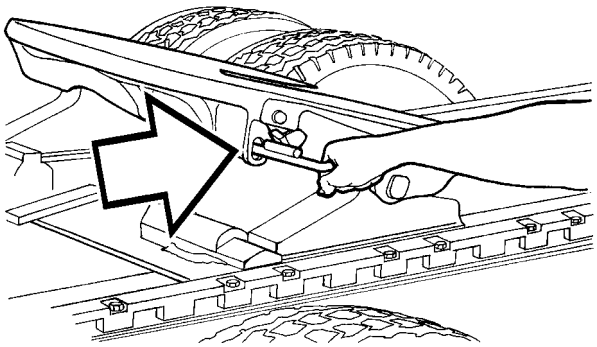

W9000202

https://truckmanualshub.com/

When the shoulder of the operating rod is outside of the operating slot, raise the operating rod handle to its maximum upward position.

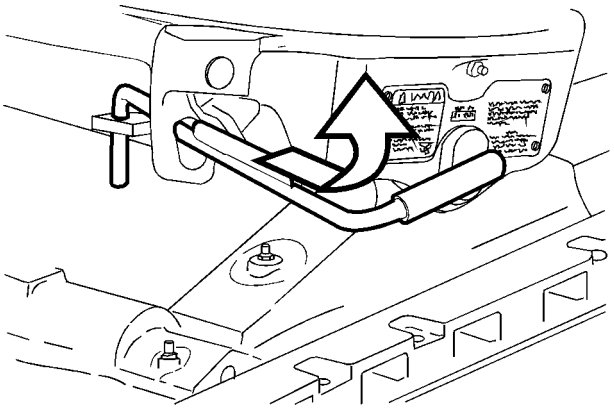

W9000242

Release the operating rod. The upper shoulder of the operating rod should now be in contact with the plate casting above the operating slot. The fifth wheel is now in the lockset position and a trailer can be coupled.

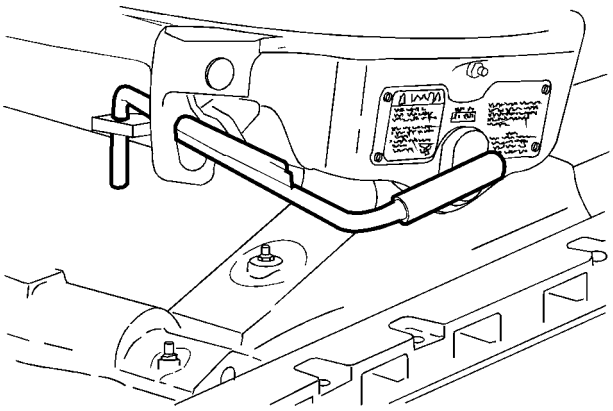

W9000274

https://truckmanualshub.com/

Trailer Coupling Procedures

This procedure covers vehicles with and without air suspension.

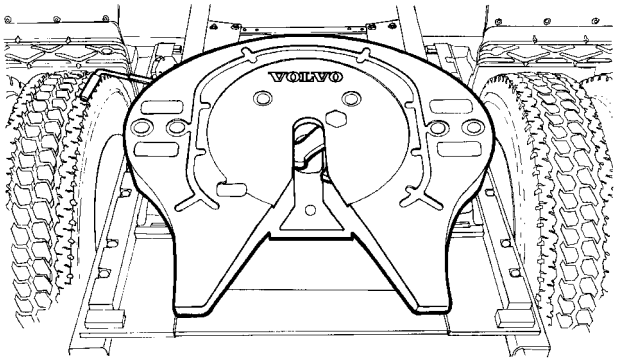

W8001449

DANGER

Failure to properly couple the tractor and trailer can result in trailer separation, causing death and property damage.

Using the following procedures, inspect the equipment before coupling to a trailer:

Make sure the fifth wheel is properly lubricated and the jaw is in the open position.

WARNING

If the jaw is not in the open position, use a pry bar to rotate the jaw to the open position. The lock is spring loaded. Keep hands away to avoid injury.

Use a pry bar to open the fifth wheel jaw, if necessary.

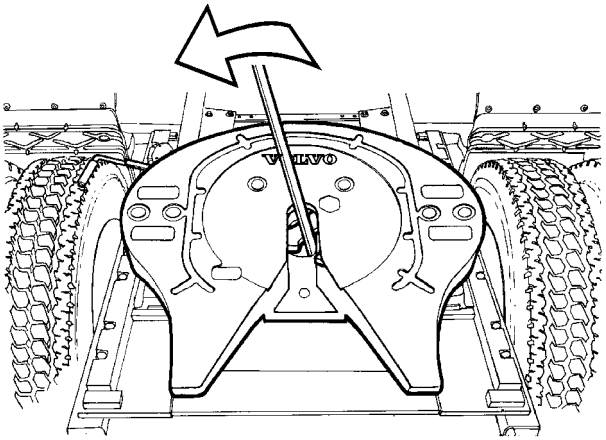

W8001450

Make sure the plate is tilted downward to the proper position at the rear.

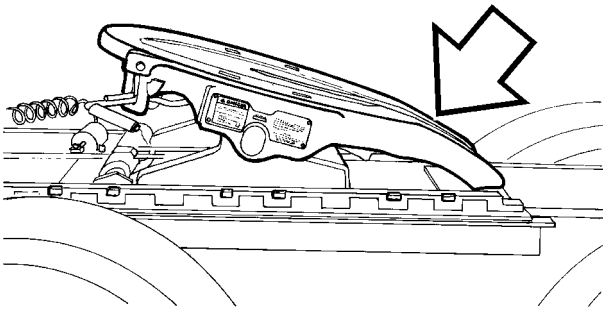

W9000236

https://truckmanualshub.com/

Make sure the mounting of the fifth wheel to the tractor frame is tight and in good condition.

If using a sliding fifth wheel, make sure the slide locking plungers are fully engaged.

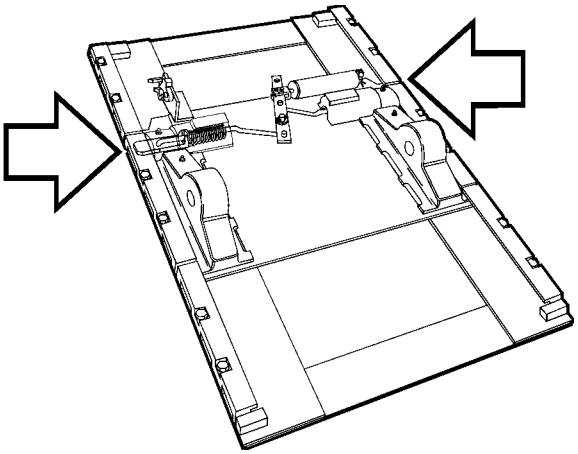

W9000205

Chock the trailer wheels. Use two chocks (both on the front and rear of the wheel) on both sides of the trailer.

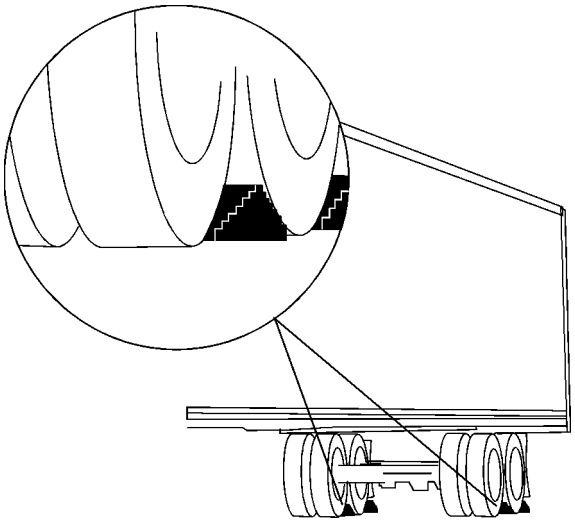

W9000263

Back up close to the trailer, centering the kingpin on the throat of the fifth wheel, and STOP.

NOTE! For tractors with air ride suspension, make sure the suspension control switch is in the “RIDE” position (switch pushed in at the top) and the air springs are inflated.

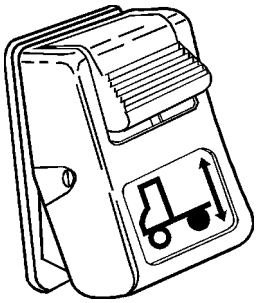

W3001341

https://truckmanualshub.com/

Connect the air brake lines and the electrical power cord. Make sure that any slack in the lines is supported so that the brake lines do not become entangled. Set the trailer brakes by pulling out the Trailer Supply control on the dashboard.

W5000713

Check to see that the trailer is at the proper height for coupling. The leading edge of the trailer plate should initially contact the fifth wheel top plate surface about 8 in. (200 mm) behind the pivot point as the tractor backs under the trailer. Raise or lower the trailer landing gear as required to obtain this position.

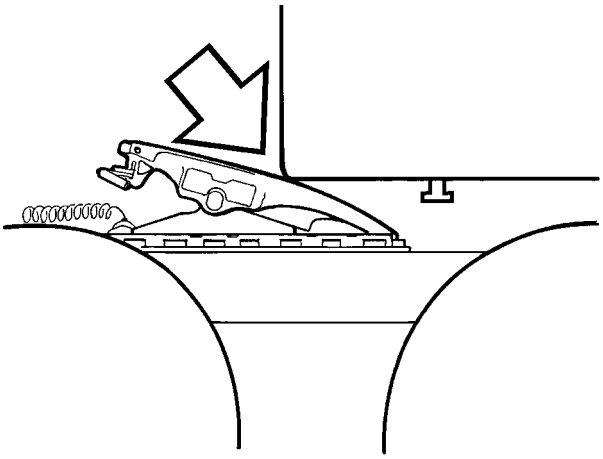

W9000237

WARNING

Attempting to couple with the trailer at an improper height could result in a false or improper couple and cause damage to the tractor, fifth wheel and trailer, and possible personal injury.

Back under the trailer, keeping the trailer kingpin centered in the throat of the fifth wheel. After picking up the trailer — **STOP** — then continue backing until the fifth wheel locks firmly on the kingpin. Stopping helps prevent hitting the kingpin too hard.

As an *initial* check, pull forward to test the completeness of the coupling.

https://truckmanualshub.com/

CAUTION

A direct visual check is required to ensure proper coupling. Several types of improper couplings will pass the initial pull test. Sound is not reliable. Do not take for granted that you are properly coupled. Get out of the cab and look.

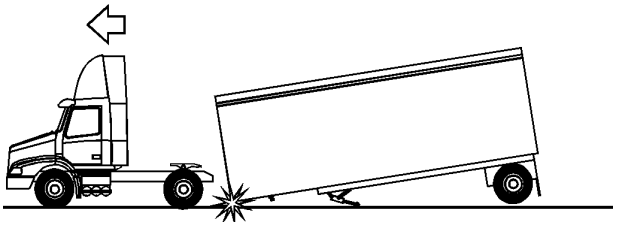

W9000286

Failed trailer coupling

Make sure the trailer kingpin is in the jaw slot and that the jaw is closed behind the pin. The kingpin should not overhang the fifth wheel or be caught in the grease groove.

To verify that the kingpin is actually in the fifth wheel slot and the jaw is closed, the pin must be visually inspected from the rear. Use a flashlight if necessary.

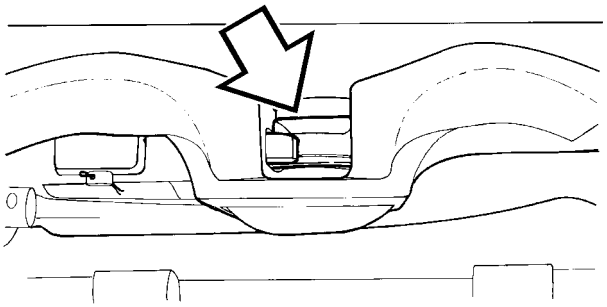

W9000181

Make sure the trailer bed is resting on the top surface of the fifth wheel plate, and that there is no visible gap between the fifth wheel and the trailer bed plate.

DANGER

Make sure trailer is properly connected before moving vehicle. Trailer separation, accident, and injury or death may occur if trailer is not properly connected.

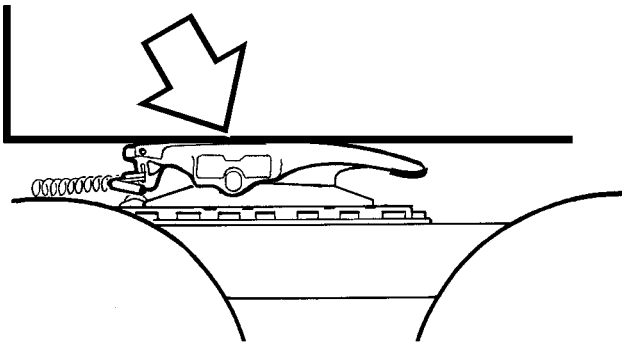

W9000240

https://truckmanualshub.com/

Make sure the operating rod is fully retracted, the safety latch is positioned above the handle and the latch swings freely.

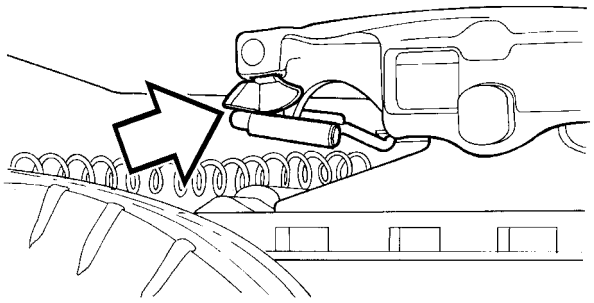

If the fifth wheel is equipped with a manual secondary lock, check to see that it is properly engaged.

NOTE! If you cannot get a proper coupling, repeat this procedure. Do not use any fifth wheel which fails to operate properly.

Check the kingpin to fifth wheel clearance by moving the tractor backward and forward with the trailer brakes set. If the clearance appears excessive (more than 1/8 in. [3 mm]), or if the jaw does not lock, the fifth wheel should be inspected by a qualified technician before proceeding.

Wind up the trailer landing gear (trailer support) to its fully retracted position. Fold down or remove the crank handle and place it in the crank handle holder.

Check the air brake lines and the trailer light cord connections.

Remove the wheel chocks from the trailer wheels.

DANGER

Make sure trailer is properly connected before moving vehicle. Trailer separation, accident, and injury or death may occur if trailer is not properly connected.

https://truckmanualshub.com/

Trailer Uncoupling Procedures

For Tractors With Air Ride Suspension:

Set the system park brake on the tractor.

Set the trailer brakes by pulling out the trailer air supply knob.

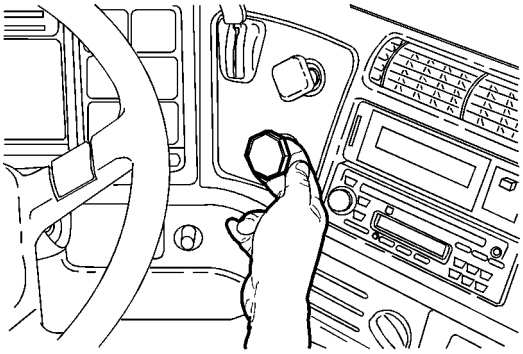

W5000921

Chock the trailer wheels. Use two chocks (one on the front and one on the rear of the wheel) on both sides of the trailer.

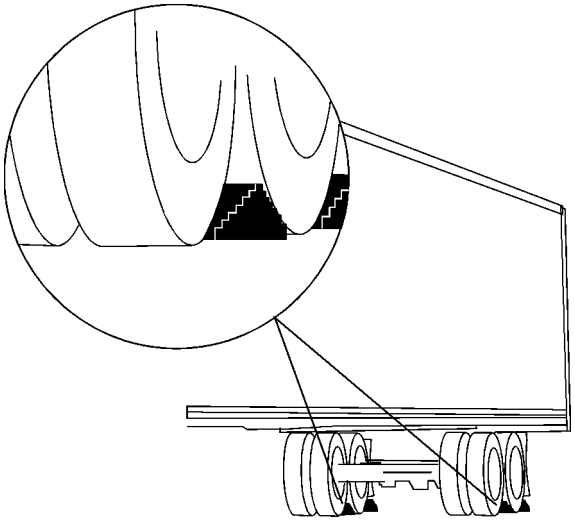

W9000263

Wind down the landing gear until it touches the ground and then give it a few extra turns in low gear. Do not raise the trailer off of the fifth wheel. Fold down or remove the crank handle and place it in the crank handle holder.

NOTE! In poor ground conditions, it may be necessary to provide a stable base for the landing gear.

https://truckmanualshub.com/

Disconnect the light cord and air brake lines. Use the dummy air couplings to keep foreign material from entering the brake lines.

Unlock the fifth wheel.

NOTE! If the operating rod is too difficult to pull, back the tractor up slightly to relieve any kingpin load against the fifth wheel jaw.

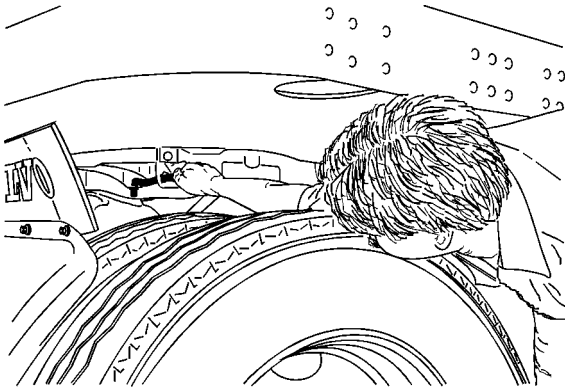

W9000275

Release the tractor park brakes and pull the tractor away from the kingpin about 12 in. (300 mm) and STOP. Do not allow the fifth wheel to leave the underside of the trailer.

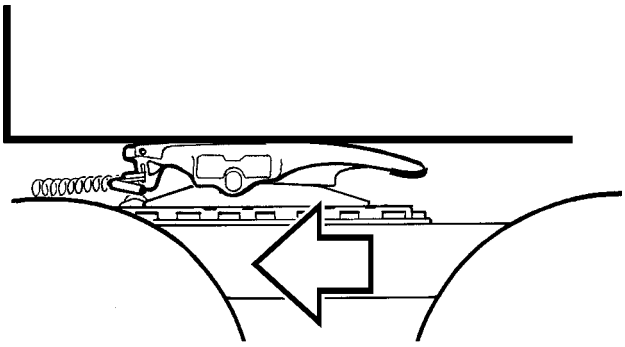

W9000239

Select the “UNCOUPLE” position (push down the latch and press in the bottom part of the switch) on the suspension control switch to deflate the air springs.

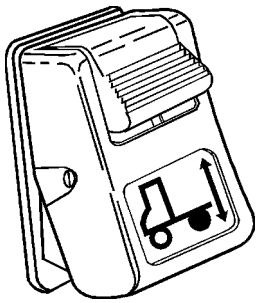

W3001341

https://truckmanualshub.com/

Wait about 30 seconds for the air springs to deflate.

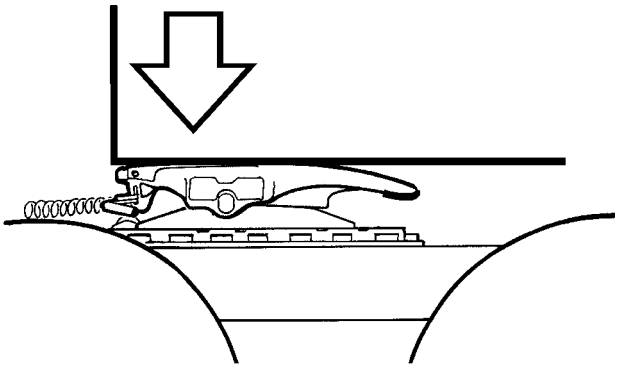

W9000238

With the suspension lowered, pull clear of the trailer and immediately select the "RIDE" position (press the top part of the switch in) on the suspension control. This restores the suspension to operating height.

CAUTION

The vehicle must never be driven with the air springs deflated. Damage to air suspension parts will occur if springs are not inflated properly.

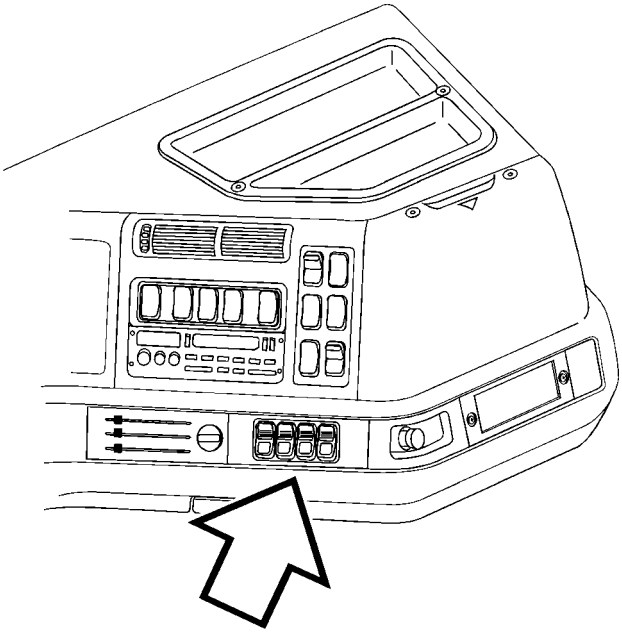

W8001459

After the trailer is uncoupled, the fifth wheel will be in the open position. The operating rod will drop and can be moved around freely.

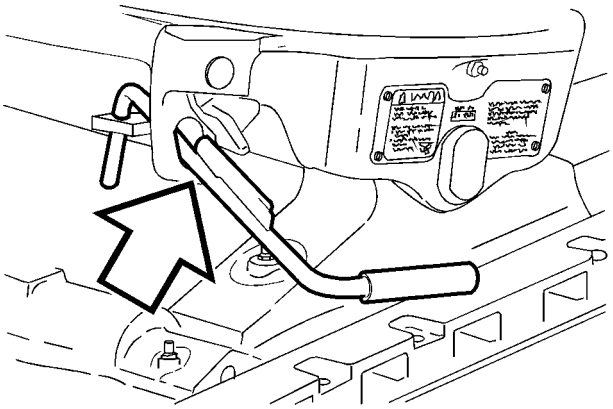

W9000203

https://truckmanualshub.com/

For Tractors Without Air Ride Suspension:

Set the system park brake on the tractor.

Set the trailer brakes by pulling out the trailer air supply knob.

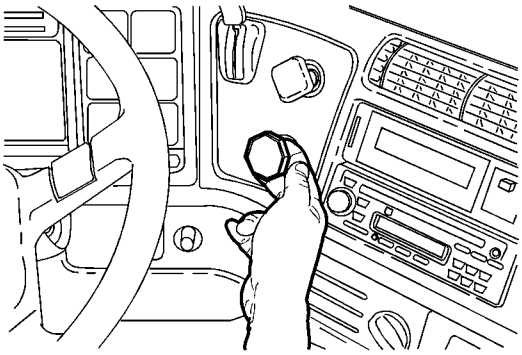

W5000921

Chock the trailer wheels. Use two chocks (both on the front and rear of the wheel) on both sides of the trailer.

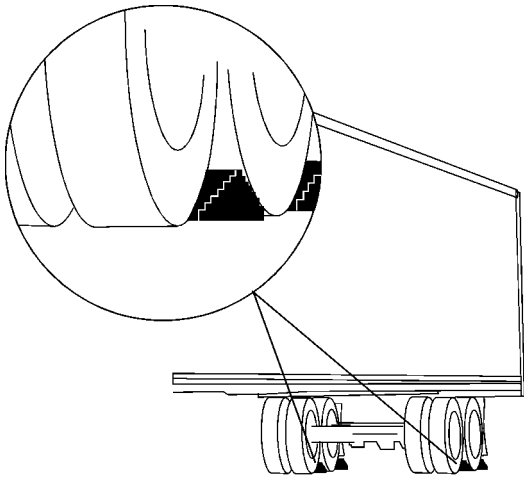

W9000263

Wind down the landing gear until it touches the ground and then give it a few extra turns in low gear. Do not raise the trailer off of the fifth wheel. Fold down or remove the crank handle and place it in the crank handle holder.

NOTE! In poor ground conditions, it may be necessary to provide a stable base for the landing gear.

https://truckmanualshub.com/

Disconnect the light cord and air brake lines. Use the dummy air couplings to keep foreign material from entering the brake lines.

Unlock the fifth wheel.

NOTE! If the operating rod is too difficult to pull, back the tractor up slightly to relieve any kingpin load against the fifth wheel jaw.

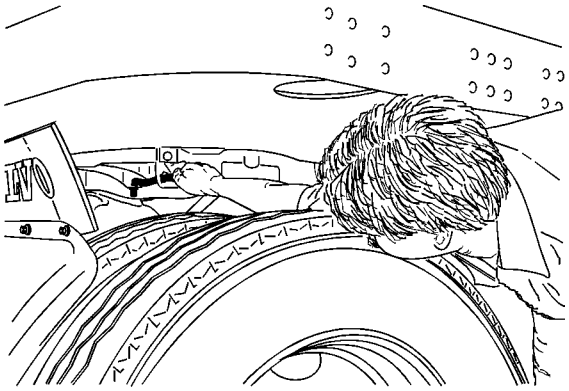

W9000275

Release the tractor park brakes and slowly drive the tractor out from under the trailer. Let the trailer slide down the fifth wheel and pickup ramps.

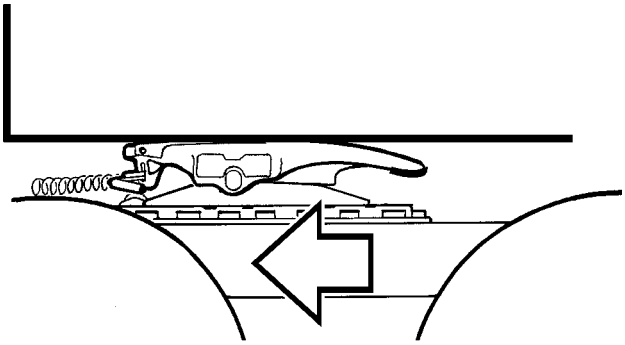

W9000239

After the trailer is uncoupled, the fifth wheel will be in the open position. The operating rod will drop and can be moved around freely.

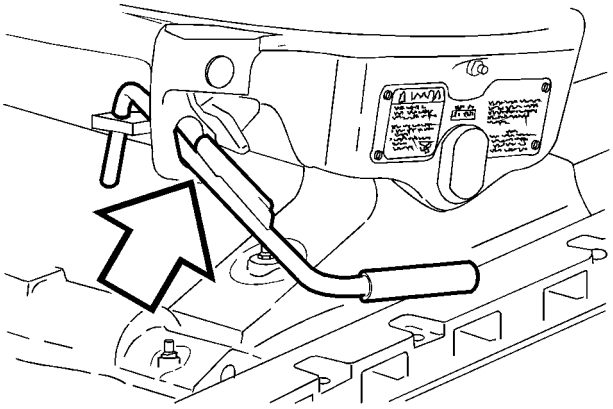

W9000203

https://truckmanualshub.com/

Operating the Volvo Slider

CAUTION

The trailer must be stopped and the trailer brakes locked, or damage to the tractor and/or trailer may result from uncontrolled sliding of the fifth wheel.

Stop the tractor and trailer in a straight line on level ground.

Lock the trailer brakes by pulling out the Trailer Supply knob.

Release the slide locking plungers by moving the switch to the “UNLOCK” position (press down the latch and push in the bottom part of the switch).

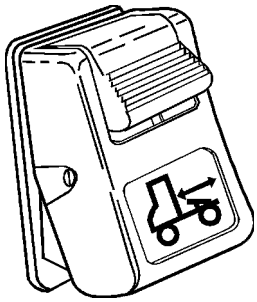

W3001346

Check to see that both of the slide plungers have released. If the plungers do not come out, lower the landing gear to relieve the pressure on the plungers. Lowering the landing gear will also allow the fifth wheel to slide easier.

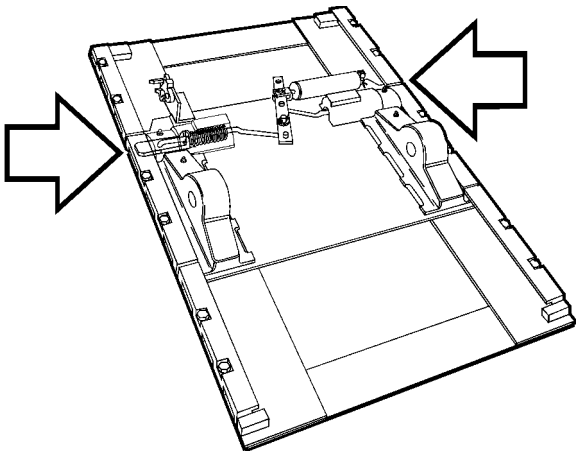

W9000205

https://truckmanualshub.com/

Slowly drive the tractor forward or backward to position the fifth wheel.

After sliding the fifth wheel to the desired position, engage the slide locking plungers by moving the cab switch to the “LOCK” position (press in the top part of the switch).

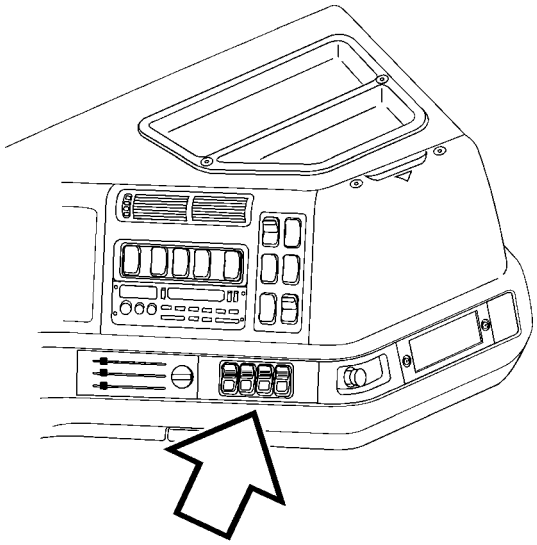

W8001459

WARNING

Do not operate the vehicle if the plungers are not fully engaged and the trailer landing gear is not fully retracted. Doing so may cause damage to the tractor, trailer and landing gear, loss of trailer and personal injury.

Visually check to see that the slide plungers are fully engaged. It may be necessary to leave the trailer brakes locked and to move the tractor slightly to engage the slide plungers into the rail.

Wind up the trailer landing gear to its fully retracted position.

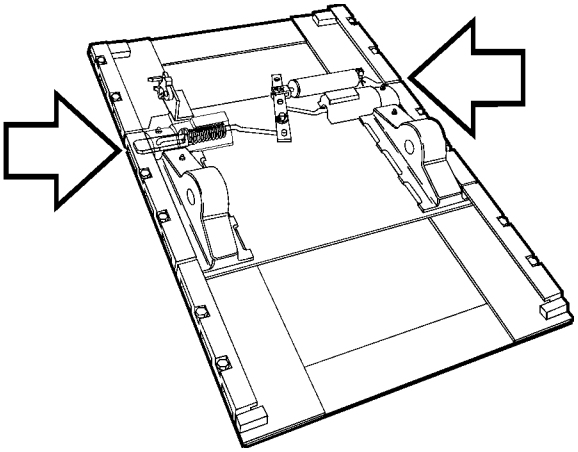

W9000205

https://truckmanualshub.com/

Towing Procedure

General

CAUTION

The driveshaft must be removed before towing the vehicle. Failure to remove the driveshaft may result in damage to the transmission.

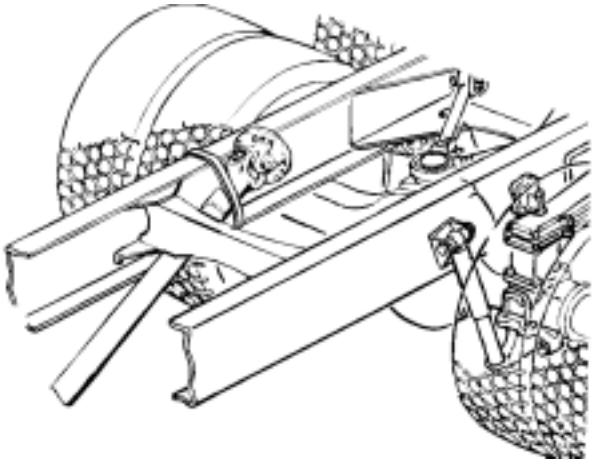

T0006670

Remove the drive shaft from the rear axle before moving the vehicle, unless it only needs to be moved a small distance for safety reasons. When the transmission is driven from the rear wheels without the engine running, there is no lubrication in the transmission.

Axle shafts must be removed if the vehicle is to be towed at speeds over 25 mph (40 km/h) or for a long distance. Openings should be covered to prevent loss of oil and entry of dirt and grit. Where oil-lubricated bearings are used, openings should be thoroughly sealed with metal discs and new gaskets before towing.

WARNING

If a vehicle with air suspension is lifted by the rear frame member, there is a risk that the air springs will separate from the spring plates. When towing has been completed, do not under any circumstances use your hands to reposition the air springs. There is a great risk that your hand will be caught between spring and plate causing personal injury.

https://truckmanualshub.com/

WARNING

Do not tow a vehicle backwards when equipped with roof air fairings. The fairings act as an air scoop and may break off. Failure to follow this warning may lead to personal injury and vehicle damage.

WARNING

Vehicles with air fairings are tall. Make sure that the total height of the vehicle, when it is raised up behind the wrecker, does not exceed the maximum allowed height for local underpasses. Failure to follow this instruction may lead to personal injury and vehicle damage.

The vehicle may now be towed. It is recommended that a wrecker with a lift bar is used since the service brakes will not function. The system must be filled with air to release the parking brake or follow the mechanical spring brake caging procedures on page 339.

NOTE! The power steering does not function when towing a vehicle with a disabled engine.

W1000075

https://truckmanualshub.com/

Towing Instructions

CAUTION

If the vehicle becomes disabled, it is very important to tow it properly. Failure to do so can cause damage to the frame and body parts. Follow the instructions below to avoid damage.

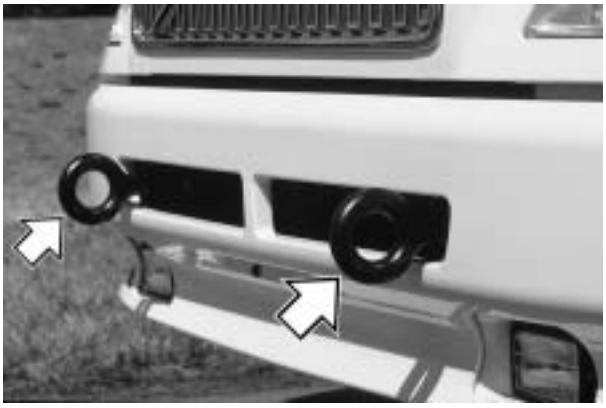

W8000941

In the event that the vehicle cannot be reached to place the wrecker lift bar under the front axle, use the tow eyes supplied with the vehicle. The front tow eyes are used as a point at the front of the vehicle where the vehicle can be pulled.

DANGER

Do not use the tow eyes for raising the front of the vehicle; the tow eyes can break. Do not crawl under a vehicle suspended by tow eyes. Failure to follow these instructions can result in serious personal injury or death.

On day cab models, the tow eyes are stored bolted to the back of the cab wall.

W8000943

https://truckmanualshub.com/

On sleeper cab models, the tow eyes are stored bolted to the back wall of the luggage compartment wall.

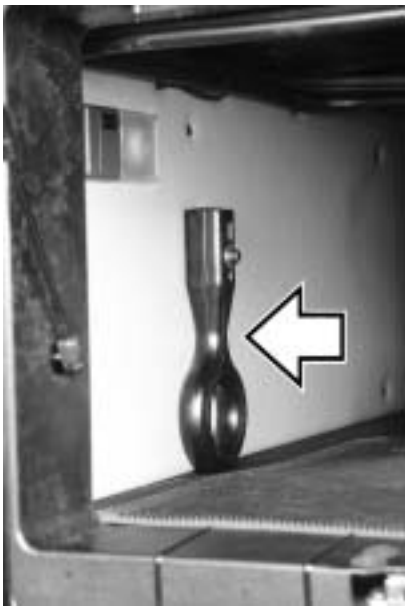

W8000942

The tow eyes are held in place when mounted on the front of the vehicle by tractor pins. These pins are stored in the tow eye mounting holes when not being used.

W8000934

When the vehicle is located properly, lift the front and locate the lift bar under the front axle and secure. Using the front axle for towing minimizes the possibility for damage to the vehicle body, frame and suspension.

NOTE! When the drive shaft or axle shafts are reinstalled, make sure the nuts are tightened to the correct torques. Also make sure the axle shafts are installed in the proper sides, with the left shaft in the left side and the right shaft in the right side.

https://truckmanualshub.com/

Caging Spring Brake Chambers

The parking spring brake chambers may be released mechanically if there is no compressed air available.

DANGER

Always start by chocking the wheels to prevent the vehicle from rolling. Failure to do so can result in unexpected vehicle movement and serious personal injury or death can occur.

Remove the plastic plug in the front end of the chamber. Remove the screw from the holder in the side of the brake chamber. Insert the screw into the front hole and push in until it bottoms. Screw into the cylinder so at least 4 to 6 threads have entered.

W5000643

https://truckmanualshub.com/

Install the washer and nut. Tighten the nut. This compresses the brake chamber spring and releases the parking brake.

DANGER

Do not attempt in any way to disassemble or tamper with the spring brake chamber. If the force stored on the spring is suddenly released, it can cause serious personal injury or death.

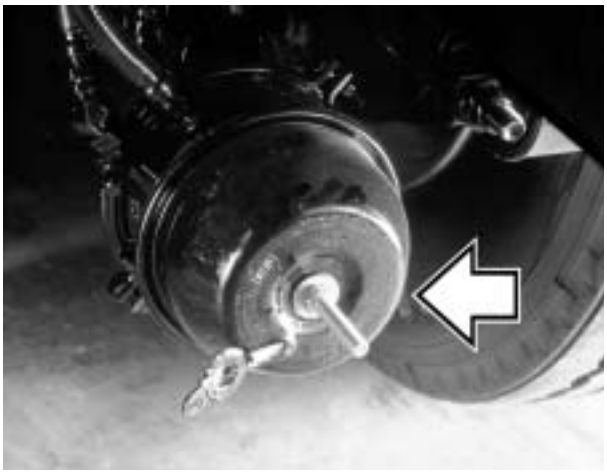

W5000644

https://truckmanualshub.com/

Service Assistance and Manuals

Your Volvo Truck dealer is trained and equipped to perform expert service on your Volvo vehicle. Your dealer has direct access to Volvo Trucks North America, Inc. for technical help, parts or service information.

There is also a direct number to Volvo Action Service (VAS), staffed 24 hours a day, if you are in need of assistance. The number to the Customer Support Center is:
1 (800) 528–6586 (or (800) 52–VOLVO).
Also on the internet:
www.vas.volvo.com

VAS can offer:

Delivery Assurance If you have a breakdown, VAS can arrange for load forwarding or equipment rental.

Personal Assurance Trained staff for handling any vehicle problems.

Uptime Assurance VAS will locate the nearest service provider and guarantee payment so you can get on the road as soon as possible.

Price Assurance VAS audits service and parts billing to ensure guaranteed labor rates and preferred parts pricing for Volvo components.

https://truckmanualshub.com/

To order a single Service Manual or a Service Manual Set for your vehicle, you should contact your authorized Volvo Truck dealer or fax a request to the Volvo Truck North America, Inc. publications warehouse (Fax: (336) 668–3625). They will help you locate the manual(s) you need.

To be able to handle the order correctly, you must give the model, year and VIN. (For VIN location, see page 16.)

Current prices for a Service Manual Set are $350.00 for vehicles with a Volvo engine and $300.00 for vehicles with a Cummins or Detroit Diesel (engine manuals have to be ordered separately from the manufacturer). If complete wiring schematics are needed, they can be ordered for $150.00. Billing will be done through the nearest Volvo Truck dealer.

NOTE! Prices subject to change without notice. Please allow 30 days for delivery.

Name	Company
Address	
CSZ (Province, Postal Code)	
Vehicle Model	Phone/Fax
Model Year	VIN
Item 1:	
Item 2:	
Item 3:	
Item 4:	
Item 5:	

https://truckmanualshub.com/

Index

A

ABS Telltale 88
Acknowledge Information and Stop Messages 130
Additional Safety Features . . . 50
Air Conditioning 174
Air Filters, Cab 187
Air Suspension Gauge 90
Air Suspension Telltale 88
Air Tanks 283
Airbag 61
Alternator 293
Antenna Multiplexer 232
Antennas 231
Antilock Braking System (ABS) 285
Auxiliary Switches 112
Axles and Wheels 311

B

Battery Box 293
Battery Jump Start 296
Battery Protection System . . . 301
Blind Spots 3
Bobtail Operation 4
Brake Application Gauge 90
Brake System Air Pressure Gauge 91
Brake System Controls 275
Brakes 272
Brakes, General 273
Bunk Access 213
Bunk Restraints 53
Bunk, Sleeper 212

C

C-Brake 107
Cab Entry 24
Cab Interior and Sleeper . . . 203
Caging Spring Brakes 339
Canadian Consumer Complaints . 6
CB-Radio 234
CD-Changer 233
Change Bulbs In Instrument . . . 95
Cigar Lighter 113
Clock, Alarm, Sleeper 226
Clock, Sleeper 224
Clutch and Transmission . . . 269
Clutch Operation 269
Cold Weather Operation 252
Collision Warning System, VO-RAD 69
Comfort Clip 60
Communication and Entertainment231
Coolant Temperature Gauge . . . 75
Cruise Control 265
Cup Holders 229
Curtains 230

D

Daily Maintenance Checks . . . 45
Dash Overview 70
Daytime Running Lights . . . 104
Diff. Lock Switch 110
Diff. Lock Telltale 86
Differential Locks 311
Display Menu: Data Log Mode 152
Display Menu: Faults? 170
Display Menu: Fuel Economy . 163
Display Menu: Gauge 159
Display Menu: Password Input . 158
Display Menu: Set-Up Mode . 132
Display Menu: System Diagnostic 137
Display Menu: Time/Distance . 165
Door Locks 20
Door Operation 21
Downhill Operation 263
Drive Axle Oil Temperature Gauge 89
Driving Light Switch 105

E

Electric System, 120 V 306
Electrical Center 302
Electrical Power Studs 304

https://truckmanualshub.com/

Electrical System 292
Emergency Information 335
Emissions Control Compliance . . 8
Engine Brake 107
Engine Break-In 257
Engine Cold Start, Volvo . . . 249
Engine Idling 260
Engine Jump Start 297
Engine Operation 256
Engine Overspeed 259
Engine Serial Number Location, Volvo Engine 18
Engine Shut-Down System . . 258
Engine Start and Operation . . 244
Engine Start Procedure 244
Engine Stopping 247
Entering Behind Cab 25
Entering the Cab 24
Ether Start 251
Exhaust Brake 107

F
Fastening Safety Belt 52
Fifth Wheel Instructions 316
Fifth Wheel Lock Telltale 86
Fifth Wheel Slider 320
Fifth Wheel Slider Operation . 333
Fifth Wheel Unlocking 321
Fifth Wheel, General 316
Fog light Switch 105
Folding Gear Lever 270
Foot Brake 275
Frame Alterations 7
Fuel Economy Driving 237
Fuel Level Gauge 90
Fuel Tank Caps 267
Fueling 268

G
Gauge, Air Suspension Pressure . 90
Gauge, Brake Application Pressure 90
Gauge, Brake System Air Pressure 91
Gauge, Coolant Temperature . . . 75
Gauge, Drive Axle Oil Temperature89
Gauge, Fuel Level 90
Gauge, Oil Pressure 76
Gauge, Pyrometer 74
Gauge, Turbo Boost Pressure . . 77
General Information 1
Graphic Display 114
Graphic Display Controls . . . 115
Graphic Display Overview . . 114
Graphic Display Telltales . . . 117

H
Headlight Bulb Changing . . . 308
Headlight Switch 104
Heated Mirror Switch 109
Heater, Parking 189
Heating and Air Conditioning . 174
Hi Beam Telltale 87
Hi/Lo Beam Switch 97
High Altitude Operation 264
Hood Opening 30
Horns 113

I
Idle Adjustment 261
Idle Shutdown 262
Idling 260
Ignition Switch 248
Inflating Tires 314
INFO Telltale 79
Info Telltale 119
Information and Stop Messages 118
Inspecting Safety Belts 55
Instrument Cluster, Left Overview 74
Instrument Light Dimmer . . . 113
Instruments and Controls 70
Instruments, Overview 70
Interior lights 203

J
Jake-Brake 107
Jump Start 296
Jump Starting Engine 297

L
Lights, Daytime Running . . . 104
Luggage Compartment 29

https://truckmanualshub.com/

M
Main Instrument, Overview . . . 82
Marker Interrupt Switch 106
Master Warning Telltale 84
Mirror Defrost Telltale 88

N
National Comfort Seat 197
National Standard Seat 196
No Charge Telltale 81
Noise Emissions 13

O
Odometer 83
Oil Pressure Gauge 76
Overload 5
Owner Information, General . . . 1
Owner's Information Package . . 2

P
Parking Brake 278
Parking Brake Telltale 87
Parking Heater 189
Parking Spring Brake 281
Power Outlets, 12 V 305
Power Outlets, 120 V 306
Power Steering 309
Power Steering, General 309
Power Studs 304
Pre-Trip Inspection and Daily Maintenance 32
Preheater Telltale 78
Pressure Gauge, Oil 76
Pressure Gauge, Turbo Boost . . 77
PTO Speed Adjustment 103
Pyrometer Gauge 74

R
Radio 233
Raise Hood 30
Rear Axle Serial Number Locations, Volvo 19
Road Relay 234
Roadside Assistance 341

S
Safety Belt Replacement 59
Safety Belt Telltale 87
Safety Belts 50
Safety Defects, Reporting 6
Safety Equipment 68
Safety Guidelines, Electrical System 292
Safety Guidelines, Fifth Wheel . 318
Safety Information, Brakes . . 272
Seat, National 196
Seat, Stationary 202
Seat, Volvo 199
Seats 195
Selling Vehicle 1
Service Assistance 341
Service Information 341
Service Manuals 342
Sink in Sleeper 220
Sleeper Bunk Restraints 53
Sleeper Bunks 212
Sleeper Curtains 230
Sliding 5th Wheel Switch . . . 111
Smoke Detector 227
Speedometer 83
Spring Brake Chambers, Caging 339
SRS Airbag 61
Steering Column, Adjustable . 310
Stereo 233
Stop Engine Telltale 80
Stop Telltale 126
Storage, Front Overhead . . . 206
Storage, VN-610 & VN-660 . . 207
Storage, VN-770 209
Suspension Level Switch . . . 111
Switches, Left Cluster 99
Switches, Optional 112
Switches, Pneumatic 110
Switches, Right Cluster 106

T
Table In VN-770 217
Tachometer 82
TCS Switch 106
TCS Telltale 93

https://truckmanualshub.com/

Telephone 234
Television 235
Telltale Bulb, Replacing 95
Telltale Overview 72
Telltale, 5th Wheel Lock 86
Telltale, ABS 88
Telltale, Air Suspension 88
Telltale, Auto Neutral 94
Telltale, Check Transmission . . 92
Telltale, Diff. Lock 86
Telltale, Hi Beam 87
Telltale, INFO 79
Telltale, Master Warning 84
Telltale, Mirror Defrost 88
Telltale, No Charge 81
Telltale, Parking Brake 87
Telltale, Preheater 78
Telltale, Safety Belt 87
Telltale, Stop Engine 80
Telltale, TCS 93
Telltale, Transmission Temperature 92
Temperature Gauge, Coolant . . . 75
Tire Inflation 314
Towing Information, General . 335
Towing Procedures 337
Traction Control System (TCS) 287
Trailer Brake Hand Control . . 283
Trailer Coupling Procedures . . 323
Trailer Supply Valve 278
Trailer Uncoupling 328
Turbo Boost Pressure Gauge . . . 77
Turn Signal 97
TV Antenna 231

U

Uphill Operation 263

V

Vehicle Access 20
Vendor Component Information . 1
Ventilation 185
Voltmeter 125
Volvo Action Service 341
Volvo Comfort Seat 199
Volvo Standard Seat 198
VORAD Collision Warning System 69

W

Warning, temperature transmission oil 129
Welding On Frame 7
Welding Precautions 7
Wheel Bearings 315
Wheel Nuts 313
Windows, Sleeper VN-660 & VN–770 228
Windshield Washer Capacity . . . 47
Windshield Washers 98
Winterfront 255
Wipers 98

https://truckmanualshub.com/

Vehicle Identification Number (Chassis Number)

Truck Model & Serial _____

Engine Model & Serial _____

Transmission Model & Serial _____

Rear Axle Model & Serial _____

Your Truck Was Delivered By:

1-800-52-VOLVO

Volvo Action Service (VAS) Support Center

If you need breakdown assistance, contact the VAS Support Center, for towing or repair. VAS is available 24 hours per day, 7 days per week at **1-800-528-6586.** A Volvo Customer Support Specialist will answer your questions or arrange for the assistance you need.

https://truckmanualshub.com/

Volvo Trucks North America, Inc.
P.O. Box 26115 Greensboro, NC 27402-6115
Volvo Trucks Canada, Ltd.
6490 Vipond Drive, Mississauga, Ontario L5T 1W8
http://www.volvotrucks.volvo.com

PV776-TSP20 154796 (4,000) 4.2001 **© Volvo Trucks North America, Inc., 2001**