duma rent
https://truckmanualshub.com
Torkonjestraat 23
8510 Marke
Belgium
056 / 222 111
info@dumarent.be
www.dumarent.be

MANITOU®

BP 249 Z. I.
44 158 ANCENIS CEDEX FRANCE
TEL : 02 40 09 10 11

YOUR DEALER

REF : 47974 EN (06 / 07 / 2000)

MSI 40
MSI 50

OPERATOR'S MANUAL

Downloaded from www.Manualslib.com manuals search engine

Torkonjestraat 23
8510 Marke
Belgium
056 / 222 111
info@dumarent.be
www.dumarent.be

Downloaded from www.Manualslib.com manuals search engine

Torkonjestraat 23
8510 Marke
Belgium
056 / 222 111
info@dumarent.be
www.dumarent.be

1st DATE OF ISSUE 03 / 1993

CATALOGUE INFORMATION	DATE OF ISSUE	OBSERVATIONS
	03 / 1993	- 1st ISSUE
	09 / 1993	- ADDING "REPAIRS NOTICE" - UP DATING : LIFTING CAB
	12 / 1993	- UP DATING
	05 / 1994	- UP DATING : LIFTING CAB
	19 / 09 / 1997	- UP DATING : REVISION OF THE OPERATOR'S MANUAL
	06 / 07 / 2000	- UP DATING

THE TEXTS AND PICTURES IN THIS DOCUMENT CANNOT BE REPRODUCED EITHER TOTALLY OR PARTLY.

Downloaded from www.Manualslib.com manuals search engine

Torkonjestraat 23
8510 Marke
Belgium
056 / 222 111
info@dumarent.be
www.dumarent.be

Downloaded from www.Manualslib.com manuals search engine

https://truckmanualshub.com
Torkonjestraat 23
8510 Marke
Belgium
056 / 222 111
info@dumarent.be
www.dumarent.be

TABLE OF CONTENTS

1 - OPERATING AND SAFETY INSTRUCTIONS — 1 - 1

– ORIGINAL REPLACEMENT PARTS AND ATTACHMENTS — 1 - 3
– DRIVER'S OPERATING INSTRUCTIONS — 1 - 4
• CAUTION — 1 - 4
• GENERAL INSTRUCTIONS — 1 - 6
• OPERATING INSTRUCTIONS — 1 - 8
• HANDLING INSTRUCTIONS — 1 - 12
• LOAD HANDLING — 1 - 14
– MAINTENANCE INSTRUCTIONS OF THE LIFT TRUCK — 1 - 18
– BEFORE STARTING UP A NEW LIFT TRUCK — 1 - 20

2 - DESCRIPTION — 2 - 1

– IDENTIFICATION OF THE LIFT TRUCK — 2 - 4
– CHARACTERISTICS — 2 - 6
– MAST CHARACTERISTICS — 2 - 16
– DIMENSIONS AND LOAD CHART — 2 - 18
– INSTRUMENTS AND CONTROLS
Up to machine n° : 117 315 — 2 - 20
From machine n° : 117 316 — 2 - 30
– DESCRIPTION AND OPERATION OF ELECTRIC AND HYDRAULIC OPTIONS — 2 - 41

3 - MAINTENANCE — 3 - 1

– FILTERS CARTRIDGES AND BELTS — 3 - 3
– LUBRICANTS AND FUEL — 3 - 4
– SERVICING SCHEDULE — 3 - 6

4 - ADAPTABLE ATTACHMENTS IN OPTION ON THE RANGE — 4 - 1

– INTRODUCTION — 4 - 3
– TECHNICAL SPECIFICATIONS OF ATTACHMENTS — 4 - 4
– ATTACHMENT SHIELDS — 4 - 8

Downloaded from www.Manualslib.com manuals search engine

Torkonjestraat 23
8510 Marke
Belgium
056 / 222 111
info@dumarent.be
www.dumarent.be

Downloaded from www.Manualslib.com manuals search engine

https://truckmanualshub.com
Torkonjestraat 23
8510 Marke
Belgium
056 / 222 111
info@dumarent.be
www.dumarent.be

1 - OPERATING AND SAFETY INSTRUCTIONS

Downloaded from www.Manualslib.com manuals search engine

Downloaded from www.Manualslib.com manuals search engine

ORIGINAL REPLACEMENT PARTS AND ATTACHMENTS

ALL MAINTENANCE ON OUR LIFT TRUCKS MUST BE CARRIED OUT USING ORIGINAL PARTS.

BY ALLOWING NON-ORIGINAL PARTS TO BE USED,

YOU RUN THE RISK

- Legally, of being liable in the event of an accident.
- Technically, of causing breakdowns to occur or of reducing your lift truck's service life.

Using counterfeit parts or components not approved by the manufacturer may put an end to contract warranty terms and lead the maker to withdraw the lift truck's certificate of compliance.

BY USING ORIGINAL PARTS DURING MAINTENANCE OPERATIONS,

YOU ARE LEGALLY COVERING YOURSELF

- Any user who procures parts from another quarter does so at his own risk.
- Any user who modifies his lift truck or has it modified by a service company, must consider that a new item of equipment has been brought onto the market and therefore takes liability for it.
- Any user who copies original parts or has them copied is taking a risk from the legal viewpoint.
- The certificate of compliance only binds the maker for parts chosen or produced under the maker's control.
- The practicalities of maintenance terms are set out by the maker. The maker is in no way liable in the event of the user not complying with such terms.

YOU GET THE BENEFIT OF THE MANUFACTURER'S KNOW-HOW

THE MANUFACTURER BRINGS TO THE USER,

- His know-how and skill.
- Guaranteed quality work.
- Original replacement parts.
- Help with preventive maintenance.
- Effective help with diagnosing faults.
- Enhancements gained from feedback.
- Training for operating staff.
- Only the manufacturer knows the details of the lift truck design and therefore has the best technological capability to carry out maintenance.

ORIGINAL REPLACEMENT PARTS ARE DISTRIBUTED EXCLUSIVELY BY MANITOU AND ITS DEALER NETWORK.
You can obtain the list of dealers by phoning the spare parts department on :
TEL : 02 40 09 10 21

Downloaded from www.Manualslib.com manuals search engine

DRIVER'S OPERATING INSTRUCTIONS

CAUTION

WHENEVER YOU SEE THIS SYMBOL IT MEANS :

WARNING ! BE CAREFUL ! YOUR SAFETY OR THE SAFETY OF THE LIFT TRUCK IS AT RISK.

- Most accidents connected with the use, maintenance and repair of the lift truck are due to non application of the basic safety instructions. By being aware of the risks to which you are exposed and by taking the necessary preventive measures, you should be able to avoid accidents occurring.
- Any operation or manoeuvre not described in the instructions is prohibited a priori, however, any person who does use another method must first ensure that he is not putting himself, another person or the lift truck in danger.
- The manufacturer is not able to anticipate all possible risk situations. Therefore the safety instructions and notices given in the user manual and on the lift truck are not exhaustive.

Any bending of the rules in safety notices or the user, maintenance or repair instructions for your lift truck may result in serious, or even fatal, accidents.

We would remind users of the risks in driving at excessive speed with regard to traffic conditions, particularly :

- Risk of loss of control on a poor-quality track.
- Increased stopping distance.

The user must remain in full control of his lift truck and should :

- Adapt his speed to each situation in order to be maintain his own safety, that of others and of his equipment.
- Always be aware of his stopping distance.

On the basis of experience, there are a number of possible situations in which operating the lift truck is contra-indicated. Such foreseeable abnormal uses, the main ones being listed below, are strictly forbidden.

- *The foreseeable abnormal behaviour resulting from ordinary neglect, but does not result from any wish to put the machinery to any improper use.*
- *The reflex reactions of a person in the event of a malfunction, incident, fault, etc. during operation of the lift truck.*
- *Behaviour resulting from application of the "principle of least action" when performing a task.*
- *For certain machines, the foreseeable behaviour of such persons as : apprentices, teenagers, handicapped persons and trainees tempted to drive a lift truck. Truck drivers tempted to operate a truck to win a bet, in competition or for their own personal experience.*

The person in charge of the equipment must take these criteria into account when assessing whether or not a person will make a suitable driver.

Downloaded from www.Manualslib.com manuals search engine

Downloaded from www.Manualslib.com manuals search engine

GENERAL INSTRUCTIONS

A - DRIVER'S OPERATING INSTRUCTIONS

- Read the operator's manual carefully, making sure you understand it.
- The operator's manual must always be kept in the lift truck, in the place provided and in the language understood by the operator.
- Respect the safety notices and instructions given on the lift truck.
- It is compulsory to replace all plates or stickers which are no longer legible or which have become worn or damaged.

B - AUTHORISATION TO OPERATE (LEGISLATION IN FORCE FOR FRANCE)
(Or refer to the legislation for each particular country)

- Only qualified personnel may use the lift truck. Its use is subject to authorisation to operate being given by the appropriate manager in the user establishment.
- The user should always carry this authorisation to operate with him while he is using the lift truck.
- The driver is not competent to authorise the driving of the lift truck by another person.
- In addition, the vehicle should be used in accordance with good practice for the profession.

C - MAINTENANCE

- The user must immediately advise his superior if his lift truck is not in good working order or does not comply with the safety notice.
- The operator is prohibited from carrying out any repairs or adjustments himself, unless he has been trained for this purpose. He must keep the lift truck properly cleaned if this is among his responsibilities.
- Carry out daily maintenance (See chapter : A - DAILY OR EVERY 10 HOURS SERVICE in paragraph : 3 - MAINTENANCE).
- Ensure tyres are adapted to the nature of the ground (See area of the contact surface of the tyres in the chapter : CHARACTERISTICS in paragraph : 2 - DESCRIPTION).
  . SAND tyres.
  . LAND tyres.
  . Snow chains.

  There are optional solutions, consult your agent or dealer.

A worn or damaged tyre can result in the lift truck being temporarily out of service.

The fitting of foam inflated tyres is prohibited and is not guaranteed by the manufacturer, excepting prior authorisation.

- For your own and other people's safety, it is forbidden to modify the structure and settings of the various components of your lift truck yourself (Hydraulic pressure, relief valve calibration, I.C. engine running speed, addition of extra equipment etc.). The same holds with regard to any suppression or modification of the safety systems, in which case the maker would no longer be liable.

Regular inspection of your lift truck is mandatory if it is to be kept in conforming condition. The frequency of such checks are defined by the current legislation of the country in which the lift truck is being operated.
Maintenance or repairs other than those detailed in part : 3 - MAINTENANCE must be carried out by qualified personnel (Consult your agent or dealer) and under the necessary safety conditions to maintain the health of the operator and any third party.

Downloaded from www.Manualslib.com manuals search engine

D - ENVIRONMENT

- A lift truck operating in an area without fire extinguishing equipment must be equipped with an individual extinguisher. There are optional solutions, consult your agent or dealer.
- Take into account climatic and atmospheric conditions of the site of utilisation.

For operation under average climatic conditions, i.e. : between -15 °C and + 35 °C, correct levels of lubricants in all the circuits are checked in production. For operation under more severe climatic conditions, before starting up, it is necessary to drain all the circuits, then ensure correct levels of lubricants using lubricants properly suited to the relevant ambient temperatures. It is the same for the cooling liquid.

. Protection against frost (See chapter : LUBRICANTS AND FUEL in paragraph : 3 - MAINTENANCE).
. Adaptation of lubricants (Ask your dealer for information).
. Engine filtration.
. Lighting (Working headlight).

Optional solutions exist, consult your dealer.

Use of a lift truck is prohibited in protected areas (e.g. refinery, explosive atmosphere). For use in these areas, specific equipment is available as an option. Consult your dealer.

IF NECESSARY, CONSULT YOUR DEALER.

Downloaded from www.Manualslib.com manuals search engine

OPERATING INSTRUCTIONS

A - DRIVER'S OPERATING INSTRUCTIONS

- Wear clothes suited for driving the lift truck, avoid loose clothes.
- Never operate the vehicle when hands or feet are wet or soiled with greasy substances.
- For increased comfort, adjust the driver's seat to your requirements and adopt the correct position in the driver's cab.
- The operator must always be in his normal position in the driver's cab. It is prohibited to have arms or legs, or generally any part of the body, protruding from the driver's cab of the lift truck.
- Always remember to fasten your seat belt and adjust it to your requirements.
- The control units must never in any event be used for any other than their intended purposes (e.g. climbing onto or down from the lift truck, portmanteau, etc.).
- If the control components are fitted with a forced operation (lever lock) device, it is forbidden to leave the cab without first putting these controls in neutral.
- Never allow a passenger to travel on the lift truck in the driver's cab.

B - BEFORE STARTING THE LIFT TRUCK

- If the lift truck is new, refer to chapter : BEFORE STARTING UP A NEW LIFT TRUCK in paragraph : 1 - OPERATING AND SAFETY INSTRUCTIONS.
- Check the condition of the tyres and the tyre pressures (See chapter : CHARACTERISTICS in paragraph : 2 - DESCRIPTION).
- Before starting the lift truck, check the different levels :
  . Engine oil.
  . Hydraulic reservoir oil.
  . Cooling liquid.
  . Braking oil.
- Also check for possible leakage of oil, fuel or liquid from the lift truck.
- Check the closing and locking of the hood.
- Whatever his experience as a truck driver is, the operator is advised to familiarize himself with the position and operation of all the controls and instruments before operating the lift truck.

C - STARTING THE LIFT TRUCK

SAFETY NOTICE

The lift truck must only be started up or manoeuvred when the operator is sitting in the driver's cab, with his seat belt adjusted and fastened.

- Never try to start the lift truck by pushing or towing it.

Such operation may cause severe damage to the transmission. If necessary, to tow the lift truck in an emergency, the transmission must be placed in the neutral position (See chapter : H - OCCASIONAL MAINTENANCE in paragraph : 3 - MAINTENANCE).

INSTRUCTIONS

- Open the LPG bottle.
- Make sure that the forward/reverse lever is in neutral.
- Turn the ignition key to the position I to activate the electrical system.
- Check the level on the fuel level gauge.
- Turn the ignition key to position II to preheat for 15 seconds.

Do not engage the starter motor for more than 15 seconds and carry out the preheating for 10 seconds between unsuccessful attempts.

Downloaded from www.Manualslib.com manuals search engine

- Press the accelerator pedal and turn the ignition key fully : the engine should then start. Release the ignition key and let the engine run at idle.
- Check all control instruments immediately after starting up, when the engine is warm and at regular intervals during use, so as to quickly detect any faults and to be able to correct them without any delay.
- If an instrument does not show the correct display, stop the engine and immediately carry out the necessary operations.

D - DRIVING THE LIFT TRUCK

SAFETY NOTICE

- Always drive the lift truck with the forks or attachment at approximately 300 mm from the ground, i.e. In the transport position.
- Familiarise yourself with the lift truck on the terrain where it will be used.
- Ensure that the service brakes and the sound alarm are working properly.
- Drive according to, and at an appropriate speed for, the conditions and state of the terrain.
- Slow down before executing a turn.
- In all circumstances make sure you are in control of your speed.
- On damp, slippery or uneven terrain, drive slowly.
- Brake gently, never abruptly.
- Only use the lift truck's forward/reverse lever from a stationary position and never do so abruptly.
- Do not drive with your foot on the brake pedal or with the parking brake on.
- Always remember that hydrostatic type steering is extremely sensitive to movement of the steering wheel, so turn it gently and not jerkily.
- Never leave the engine on when the lift truck is unattended.
- Look in the direction you are travelling and always keep clear visibility of the road. Use the left and right rear view mirrors frequently and ensure that they are kept in good condition, are clean and correctly adjusted.
- When working at night, ensure that your lift truck is fitted with full beam lights. There are optional solutions, consult your agent or dealer.
- Drive round obstacles.
- Never move onto a loading platform without having first checked :
  . That it is suitably positioned and made fast.
  . That the unit to which it is connected (Wagon, lorry, etc.) will not shift.
  . That this platform is prescribed for the total weight of the lift truck to be loaded.
  . That this platform is prescribed for the width of the lift truck.
- Never move onto a foot bridge, floor or freight lift, without being certain that they are prescribed for the weight and size of the lift truck to be loaded and without having checked that they are in sound working order.

Take extreme care with loading platforms, trenches, scaffolding, recently dug and/or backfilled ground.

- The loaded lift truck must not travel at speeds in excess of 12 km/h.

INSTRUCTIONS

- Raise the forks or attachment to the transport position approximately 300 mm from the ground.
- Shift the forward/reverse lever to the selected direction of travel.
- Release the parking brake and accelerate gradually until the lift truck moves off.

Downloaded from www.Manualslib.com manuals search engine

E - STOPPING THE LIFT TRUCK

SAFETY NOTICE

- Before stopping the lift truck after a long working period, leave the I.C. engine idling for a few moments, to allow the coolant liquid and oil to lower the temperature of the engine and transmission.

Do not forget this precaution, in the event of frequent stops of the engine, or else the temperature of certain parts will rise significantly due to the stopping of the cooling system, with the risk of badly damaging such parts.

- Never leave the ignition key in the lift truck when the lift truck is unattended.
- When the lift truck is stationary, place the forks or attachment on the ground, apply the parking brake and put the forward/reverse lever in neutral.
- If the driver has to leave his cab, even for a moment, it is essential apply the parking brake and put the forward/reverse lever in neutral.
- Make sure that the lift truck is not stopped in any position that will interfere with the traffic flow and at less than one meter from the track of a railway.
- In the event of prolonged parking on a site, protect the lift truck from bad weather, particularly from frost (Check the level of antifreeze), close the rear windows, lock the cab doors and ensure that the hood is properly secured.

INSTRUCTIONS

- Park the lift truck on flat ground or on an incline lower than 15 %.
- Release the accelerator pedal and stop the lift truck.
- Place the forward/reverse lever in neutral.
- Apply the parking brake.
- Lower the forks or attachment to rest on the ground.
- Stop the engine with the ignition switch.
- Remove the pressure in the hydraulic circuits by using the hydraulic controls.
- Remove the ignition key.
- Check the closing and locking of doors, windows and hood.

Before leaving your driver's cabin, ensure that you have carried out all operations for stopping the lift truck, for your safety and the safety of others.

F - DRIVING THE LIFT TRUCK ON THE PUBLIC HIGHWAY

SAFETY INSTRUCTIONS

- When driving a lift truck on roads open to public traffic, observe the provisions of the Highway Code.
- Lift truck drivers, driving on the public highway, must abide by the general provisions relative to highway traffic.
- The lift truck must conform to the provisions of the Highway Code. If necessary, optional solutions exist, consult your dealer.

Transport of loads on the public highway is forbidden and attachments mounted on the lift truck must be fitted with equipment in accordance with regulations or else dismounted.

Downloaded from www.Manualslib.com manuals search engine

INSTRUCTIONS
- Ensure that the flashing light is in position and that it is working.
- Check the good working order and cleanness of lights, indicators and windscreen wiper.
- Check the adjustment of the rear view mirrors.
- Ensure that the fuel level is sufficient.
- Put the attachment at 300 mm from the ground.

G - OPERATING THE LIFT TRUCK WITH A TRAILER ON A PUBLIC HIGHWAY
- For using a trailer, consult the regulations in force in your country (Maximum travel speed, braking, maximum weight of trailer, etc.).
- Do not forget to connect the lift truck's electrical equipment to that of the trailer.
- Do not use a non-braked trailer if the unit weight of a load exceeds that imposed by the highway code.
- Do not use a non-braked trailer without braking equipment for the trailer on the lift truck.
- Do not forget to connect the lift truck's braking equipment to that of the trailer.
- The maximum vertical pull on the trailer hook must not exceed 1500 daN.
- The authorised total towed weight (A.T.T.W.) must not exceed the maximum weight authorised by the manufacturer (Consult the manufacturer's plate on your lift truck).

H - OPERATING THE LIFT TRUCK WITH A FRONT-END ATTACHMENT ON A PUBLIC HIGHWAY
- For driving with an attachment, check the regulations currently applicable in your country.
- The attachment must not exceed the overall width of the lift truck.
- The length of the entire unit must not exceed the overall length by 6 metres.
- Do not mask the lighting range of the front headlamps.
- Set the attachments shields in place (See chapter : ATTACHMENT SHIELDS in paragraph : 4 - ADAPTABLE ATTACHMENTS IN OPTION ON THE RANGE) or disassemble the attachment.

IF NECESSARY, CONSULT YOUR DEALER.

Downloaded from www.Manualslib.com manuals search engine

HANDLING INSTRUCTIONS

A - GENERAL

- Ensure the correct functioning of your lift truck's attachments.
- Do not attempt to carry out operations which exceed the capacities of your lift truck or attachments.
- It is prohibited to increase the counterweight value in any way.
- It is strictly prohibited to carry or to lift up persons using the lift truck, unless the vehicle is specially equipped for this purpose and has the corresponding certificate of conformance for lifting people.
- Avoid travelling for a long distance in reverse.

B - ATTACHMENTS

- Ensure that the attachment is correctly fitted and locked to its frame.
- Conform to the limits on the load chart for the lift truck and/or attachment.
- Ensure that palettes, cases, etc, are in good order and suitable for the load to be lifted.
- Position the forks perpendicular to the load to be lifted, taking account of the load's centre of gravity.
- Never lift a load with a single fork.
- Never lift a sling load with a single fork or with the carriage. Optional solutions exist, consult your dealer.
- Ensure that rapid hydraulic connections on the attachment system are clean and protected.

Before each change of an attachment with hydraulic function, in order to avoid damaging the rapid hydraulic connections :

- *Place the attachment in the closed position, flat on the ground (For unstable attachments, ensure they are secured using wedges).*
- *Switch off the I.C. engine.*
- *Remove pressure from the attachment hydraulic system using the hydraulic controls.*

C - ENVIRONMENT

- Take care when raising the load that no object or person is in the way of movement and do not make any incorrect manoeuvres.
- In the case of work near aerial lines, ensure that the safety distance is sufficient between the working area of the lift truck and the aerial line.

You must consult your local electrical agency.

You could be electrocuted or seriously injured if you operate or park the lift truck too close to power cables. You are strongly advised to ensure that the safety rules on the site conform to the local regulations in force regarding all types of work carried out close to power cables.

- Do not allow anybody to come near the working area of the lift truck or pass beneath an elevated load.
- When using the lift truck on a slope, before raising the mast, ensure that the ground is horizontal (See paragraph : F - HORIZONTAL POSITION OF THE LIFT TRUCK in the chapter : LOAD HANDLING).
- Travelling on a longitudinal slope :
  - Drive and brake gently.
  - Moving without load : Forks or attachment facing downhill.
  - Moving with load : Forks or attachment facing uphill.

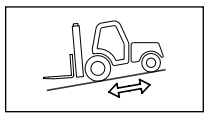

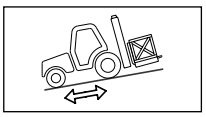

- Ensure that scaffolding, loading platform or pile is capable of bearing the weight.
- Ensure the stability and solidity of the ground before depositing a load.

Downloaded from www.Manualslib.com manuals search engine

D - HANDLING

- Always consider safety and only transport balanced and correctly secured loads to avoid any risk of tipping.
- Fully engage forks under the load and move it in the transport position (The forks 300 mm from the ground and the mast sloping backwards).
- For obvious reasons regarding the lift truck's stability and clear visibility of the surrounding environment, only move the lift truck when the mast is in the transport position.
- Do not manoeuvre the lift truck with the mast in the raised position unless under exceptional circumstances and then with extreme caution, at very low speed and using gentle braking. Ensure that visibility is adequate and get another person to guide you along if necessary.
- Never shift the position of the load while the lift truck is in motion.
- The simultaneous use of two lift trucks to handle heavy or bulky loads is a dangerous manoeuvre, requiring specific precautions to be taken. This should only be done in exceptional circumstances and in the presence of a handling manager.
- Never drive too fast or brake abruptly when carrying a load.
- During handling, drive at low speed.
- Check the load, particularly when turning corners and especially if it is very bulky.
- Secure unstable loads.
- Handle loads with caution, at slow speed, without sudden jerks when moving them at significant heights and jib extention.

In the event of high winds or storms, do not carry out handling work that jeopardizes the stability of the lift truck and its load, particularly if the load catches the wind badly.

- Do not change direction sharply and at high speed.

In the event of the lift truck overturning, do not try to leave the cabin during the incident.
YOUR BEST PROTECTION IS TO STAY FASTENED IN THE CABIN.

- Apply the parking brake when lifting or depositing a difficult load or when on an incline.
- Do not stop the lift truck with the load in an elevated position.
- Do not leave a laden lift truck with the parking brake applied on an incline which exceeds 15 %.

E - VISIBILITY

- Constantly keep clear visibility of the road, either direct view (looking backwards when reversing) or indirect view using the panoramic rear view mirrors to check for people, animals, holes, obstacles, change of slope, etc.
- If the visibility in forward motion is not sufficient because of the bulkiness of the load, drive in reverse motion. This manoeuvre must remain exceptional and for short distances.
- Ensure you have good visibility (Clean windows, adequate lighting, correctly adjusted rear view mirror, etc.).
- Signalling and lighting on the lift truck must take account of the conditions of use. In addition to series equipment mounted on your lift truck, a certain number of options are available, such as : road lighting, stop lights, flashing light, reverse lights, reverse buzzer alarm, front light, rear light, etc. Consult your agent or dealer.

IF NECESSARY, CONSULT YOUR DEALER.

Downloaded from www.Manualslib.com manuals search engine

LOAD HANDLING

A - WEIGHT OF LOAD AND CENTRE OF GRAVITY

Carrying a load greater than the rated capacity for the lift truck or for the attachment is prohibited.

- Before taking up a load, you must know its weight and its centre of gravity.
- The load chart relating to your lift truck is valid for a weight with its centre of gravity 500 or 600 mm from the heel of the forks (As model of lift truck) (Fig. A). For a higher centre of gravity, consult your agent or dealer.
- For irregular loads, determine the centre of gravity in the transverse direction before handling (Fig. B).

For loads with a moving centre of gravity (e.g. liquids), take account of the variations in the centre of gravity in order to determine the load to be handled (Consult your agent or dealer) and be vigilant and take extra care to limit these variations as far as possible.

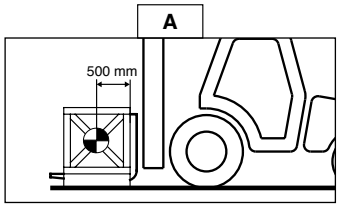

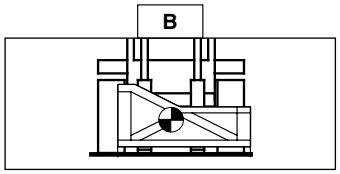

B - TAKING UP A LOAD ON THE GROUND

- Approach the lift truck perpendicular to the load, with the forks in a horizontal position (Fig. C).
- Adjust the fork spread and centering in connection with the load (Fig. D) (Optional solutions exist, consult your dealer).

Beware of the risks of trapping or squashing limbs when manually adjusting the forks. Always maintain an equal distance between the forks and the centre of the carriage in order to keep the load completely stable.

- Move the lift truck forward slowly (1) and bring the forks to stop in front of the load (Fig. E), if necessary, slightly lift the mast (2) while taking up the load.
- Apply the parking brake and place the forward/reverse lever in neutral.
- Slightly lift the load (1), incline the mast (2) backwards in the transport position (Fig. F).

Tilt the load sufficiently backwards to ensure its stability (loss of load on braking) without upsetting the balance of the load in so doing.

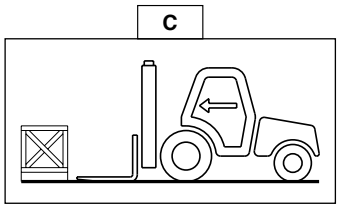

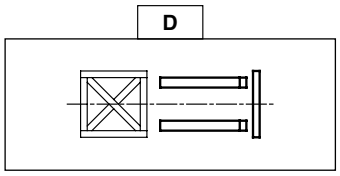

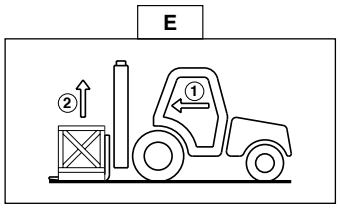

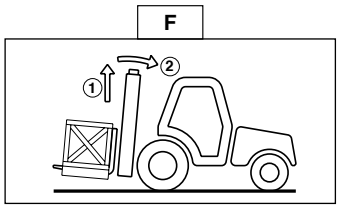

Downloaded from www.Manualslib.com manuals search engine

C - TAKING UP A HIGH LOAD ON TYRES

Under no circumstances should you pick up a load if the lift truck is not a horizontal position. (See paragraph : F - HORIZONTAL POSITION OF THE LIFT TRUCK in the chapter : LOAD HANDLING).

- Ensure that the forks will easily pass under the load.
- Approach the lift truck perpendicular to the load and with the forks in a horizontal position (Fig. G) manoeuvring gently and carefully (See paragraph : E - VISIBILITY in the chapter : HANDLING INSTRUCTIONS for visibility of the road).
- Bring the forks to stop in front of the load (Fig. H). Apply the parking brake and place the forward/reverse lever in neutral.
- Slightly lift the load (1) and incline the mast (2) backwards to stabilize the load (Fig. I).

Tilt the load sufficiently backwards to ensure its stability (loss of load on braking) without upsetting the balance of the load in so doing.

- Manoeuvring very gently and carefully (See paragraph : E - VISIBILITY in the chapter : HANDLING INSTRUCTIONS for visibility of the road), back up the lift truck (1) to release the load, and bring the load into the transport position (Fig. J).

G

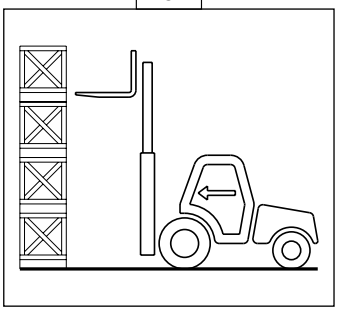

H

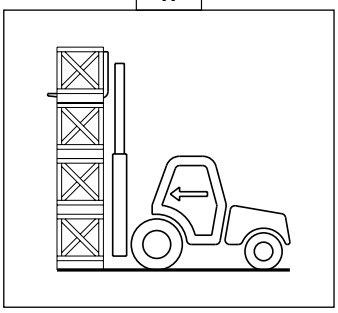

I

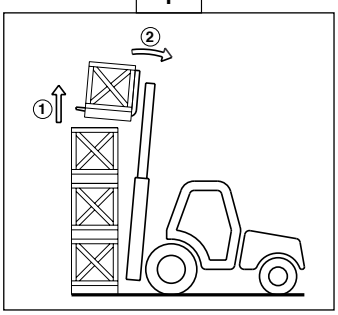

J

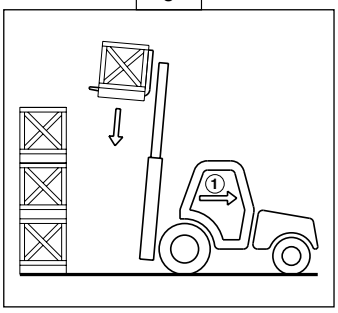

Downloaded from www.Manualslib.com manuals search engine

D - LAYING A HIGH LOAD ON TYRES

Under no circumstances should you lay down a load if the lift truck is not a horizontal position. (See paragraph : F - HORIZONTAL POSITION OF THE LIFT TRUCK in the chapter : LOAD HANDLING).

- Approach the load in the transport position in front of the pile (Fig. K).
- Lift the mast (1) until the load is above the pile, and move the lift truck forward (2) (Fig. L) manoeuvring very gently and carefully (See paragraph : E - VISIBILITY in the chapter : HANDLING INSTRUCTIONS for visibility of the road). Apply the parking brake and place the forward/reverse lever in neutral.
- Place the load in a horizontal position by tilting the mast forwards (1) and lay it down on the pile (2) while checking the correct positioning of the load (Fig. M).
- To drive very gently and carefully.
- Free the forks by reversing the lift truck (3) (Fig. M) (See paragraph : E - VISIBILITY in the chapter : HANDLING INSTRUCTIONS for visibility of the road). Then bring the forks into the transport position.

K

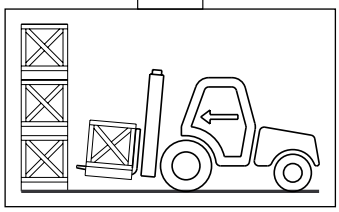

L

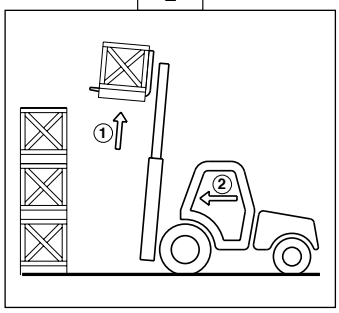

M

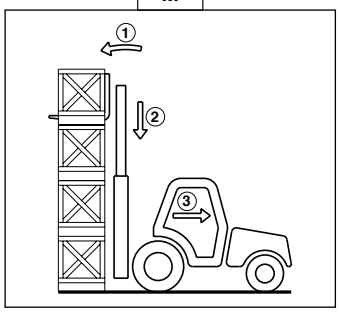

E - TAKING UP A NON PALLETISED LOAD

- Tilt the carriage (1) forwards and move the lift truck forward (2) while simultaneously crowding the carriage backwards to slip the forks under the load (Fig. N). If necessary, wedge the load.

N

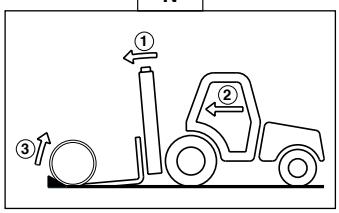

F - HORIZONTAL POSITION OF THE LIFT TRUCK

Apart from the transverse slope of the ground, several parameters can upset the horizontal position of the lift truck.

- The tyre pressure.
- The stability of the ground.
- The balance of the load.
- Strong wind or stormy conditions.

Before any handling work, check the points above and ensure that the lift truck is ***completely horizontal****.*

Downloaded from www.Manualslib.com manuals search engine

Downloaded from www.Manualslib.com manuals search engine

MAINTENANCE INSTRUCTIONS OF THE LIFT TRUCK

MAINTENANCE INSTRUCTIONS

A - GENERAL

- Read the operator's manual carefully and ensure you understand it.
- Stop the I.C. engine, when an intervention is necessary.
- Wear clothes suitable for the maintenance of the lift truck, avoid wearing jewellery and loose clothes. Tie and protect your hair, if necessary.
- Ensure the area is sufficiently ventilated before starting the lift truck.

Make sure that the disposal of process materials and of spare parts is carried out in total safety and in a ecological way.

- Carry out all repairs immediately, even if the repairs concerned are minor.
- Repair all leaks immediately, even if the leak concerned is minor.
- Do not attempt to loosen unions, hoses or any hydraulic component with the circuit under pressure.

The handling and removal of the balancing valves or safety valves which may be fitted to the cylinders of your lift truck can be dangerous. A balancing valve must only be removed when the cylinder concerned is at rest and the hydraulic circuit is depressurised.
This operation can only be carried out by authorised staff.

- Do not smoke or approach the lift truck with a flame, when the fuel tank is open or is being filled.
- Take care not to burn yourself (Exhaust, radiator, I.C. engine, etc.).
- Disconnect the negative cable terminal (-) from the top of the battery before working on the electrical circuit or on the lift truck (e.g. : Welding).
- Do not drop metallic items on the battery.
- When carrying out electric welding work on the lift truck, connect the negative cable from the equipment directly to the part being welded, so as to avoid high tension current passing through the alternator.

B - MAINTENANCE

- The maintenance and the keeping in compliance of the lift truck are compulsory.
- Carry out daily maintenance (See chapter : A - DAILY OR EVERY 10 HOURS SERVICE in paragraph : 3 - MAINTENANCE).
- Do not run the engine without air filter, or with oil, water or fuel leaks.

Wait for the I. C engine to cool before removing the radiator cap or expansion pan (Pressurised system).

- Change the filter cartridges (See servicing schedules in chapter : FILTERS CARTRIDGES AND BELTS in paragraph : 3 - MAINTENANCE).

C - LEVELS

- Use the recommended lubricants (Never use contaminated lubricants).
- Do not fill the fuel tank when the I.C. engine is running.
- Only fill up the fuel tank in areas specified for this purpose.
- Do not fill the fuel tank to the maximum level.

Downloaded from www.Manualslib.com manuals search engine

D - WASHING

- Clean the lift truck or at least the area concerned before any intervention.
- Remember to close the doors and the windows of the cab.
- During washing, avoid the articulations and electrical components and connections.

If necessary, protect against penetration of water, steam or cleaning agents, components susceptible of being damaged, particularly electrical components and connections and the injection pump.

- Clean the lift truck of any fuel, oil or grease trace.

FOR ANY INTERVENTION OTHER THAN REGULAR MAINTENANCE, CONSULT YOUR DEALER.

Downloaded from www.Manualslib.com manuals search engine

BEFORE STARTING UP A NEW LIFT TRUCK

INTRODUCTION

- Our lift trucks have been designed for easy handling by the operator and maximum ease of maintenance for the mechanic.
- However, before commencing to operate the lift truck, the user should carefully read and understand the various chapters of this manual which has been provided to solve driving and maintenance problems. By following these instructions the user will be able to take full advantage of the versatility of this lift truck.
- The operator must familiarize himself with the positions and functions of all the controls and instruments before operating the lift truck.

Do not attempt to start a new lift truck before the following checks have been carried out :

LUBRICATION

- Check that all the correct grades of oils and greases that are required are available ; see chapter : SERVICING SCHEDULE in paragraph : 3 - MAINTENANCE and top up if necessary.

For operation under average climatic conditions, i.e. : between -15 °C and + 35 °C, correct levels of lubricants in all the circuits are checked in production. For operation under more severe climatic conditions, before starting up, it is necessary to drain all the circuits, then ensure correct levels of lubricants using lubricants properly suited to the relevant ambient temperatures. It is the same for the cooling liquid (Contact your dealer for information, if necessary).

DRY AIR FILTER

- Ensure that the air filter is undamaged and not blocked.
- Tighten the fastening devices if necessary.

Never run the engine with the air filter removed or damaged.

COOLING SYSTEM

- Do not start the lift truck without checking the radiator coolant level or if the fan belt is damaged or broken.

HYDRAULIC SYSTEM

- Check by a visual examination that there are no leaks or oil oozing in the hoses, connections and unions. If necessary, tighten or repair the defective connections.
- Also check that the tank oil level is correct.

BRAKING SYSTEM

- Check by a visual examination that there are no leaks or oil oozing in the hoses, connections and unions. If necessary, tighten or repair the defective connections.
- Also check the oil level in the tank.

Ensure that the recommended oil is used, in order to avoid serious damage to the braking system.

TYRES

- Make sure that the wheel nuts are correctly tightened (See chapter : A - DAILY OR EVERY 10 HOURS SERVICE in paragraph : 3 - MAINTENANCE) and that the tyre pressures are correct (See chapter : CHARACTERISTICS in paragraph : 2 - DESCRIPTION).

FUEL SYSTEM

- Check that all fuel lines are secured.
- If necessary drain the fuel filter and bleed the fuel system of air.

Downloaded from www.Manualslib.com manuals search engine

ELECTRICAL CIRCUIT

- Check the level and the density of the electrolyte in the battery (See chapter : B - EVERY 50 HOURS SERVICE in paragraph : 3 - MAINTENANCE).
- Check the components of the electrical system, the connections and fastening devices.

IF NECESSARY, CONSULT YOUR DEALER.

Downloaded from www.Manualslib.com manuals search engine

Downloaded from www.Manualslib.com manuals search engine

Torkonjestraat 23
8510 Marke
Belgium
056 / 222 111
info@dumarent.be
www.dumarent.be

2 - DESCRIPTION

Downloaded from www.Manualslib.com manuals search engine

Downloaded from www.Manualslib.com manuals search engine

Downloaded from www.Manualslib.com manuals search engine

duma rent
https://truckmanualshub.com
Torkonjestraat 23
8510 Marke
Belgium
056 / 222 111
info@dumarent.be
www.dumarent.be

IDENTIFICATION OF THE LIFT TRUCK

As our policy is to promote a constant improvement of our products, our range of telescopic lift trucks may undergo certain modifications, without obligation for us to advise our customers.

When you order parts, or when you require any technical information, always specify :

NOTE : For the owner's convenience, it is recommended that a note of these numbers is made in the spaces provided, at the time of the delivery of the lift truck.

A

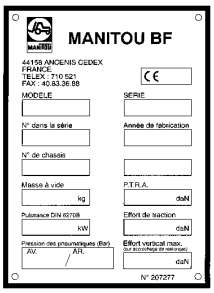

PLATE MANUFACTURER OF THE LIFT TRUCK (FIG. A)

- Model _____
- Series _____
- Serial Nr _____
- Chassis Nr _____
- Year of manufacture _____

B

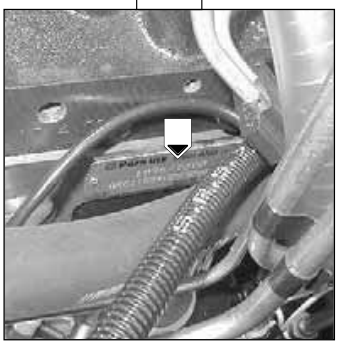

I.C. ENGINE (FIG. B)

- Engine Nr _____

C

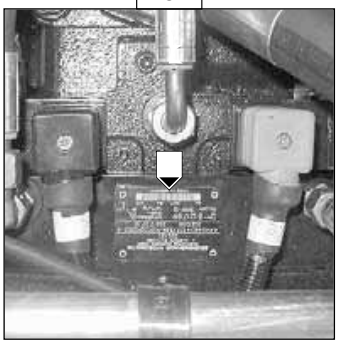

HYDROSTATIC PUMP (FIG. C)

- Pump Nr _____
- Codification type _____
- Manufacturer's Nr _____
- Year of manufacture _____

D

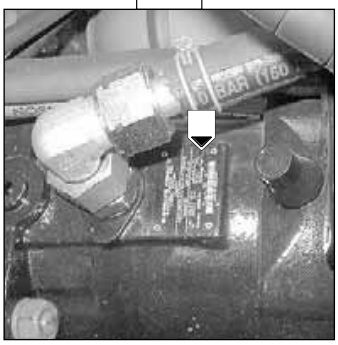

HYDROSTATIC MOTOR (FIG. D)

- Pump Nr _____
- Codification type _____
- Manufacturer's Nr _____
- Year of manufacture _____

Downloaded from www.Manualslib.com manuals search engine

duma rent
https://truckmanualshub.com
Torkonjestraat 23
8510 Marke
Belgium
056 / 222 111
info@dumarent.be
www.dumarent.be

TRANSFER BOX-FRONT (FIG. E)

- Type _____
- MANITOU reference _____

E

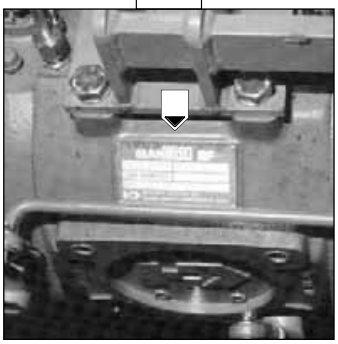

CAB (FIG. F)

- Type _____
- Serial Nr _____

F

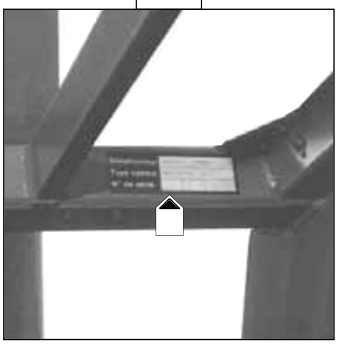

MAST (FIG. G)

- Mast identification Nr _____

G

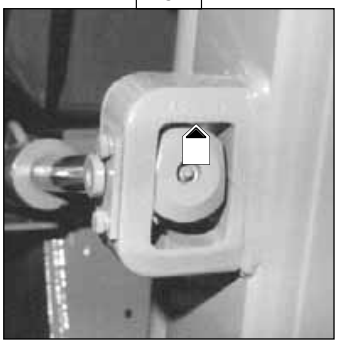

PLATE MANUFACTURER OF THE ATTACHMENT (FIG. H)

- Model _____
- Serial Nr _____
- Year of manufacture _____

H

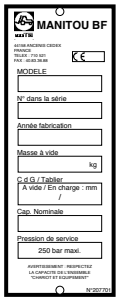

Downloaded from www.Manualslib.com manuals search engine

CHARACTERISTICS

UP TO MACHINE N° 142 126

ENGINE

- Type	**PERKINS 1004-4**
- Number of cylinders	4
- Number of strokes	4
- Injection system	Direct
- Ignition sequence	1.3.4.2
- Clearance of rocker valve (Cold)	
. Inlet	0,20 mm
. Exhaust	0,45 mm
- Capacity	3990 cm³
- Bore	100 mm
- Stroke	127 mm
- Volumetric ratio	16.5 : 1
- Nominal running speed	2300 tr/mn
- Idle speed	850 tr/mn
- Full speed	2500 tr/mn
- Power DIN 70.020	82 cv 60,5 kw
- Power DIN 6270 B	80,5 cv 59,3 kw
- Power SAE	85,2 cv 62,9 kw
- Power BS.AU 141 a 1971	82,1 cv 60,5 kw
- Maximum torque	289 Nm to 1425 rpm
- Air cleaner	dry 3 microns

COOLING CIRCUIT

- Type	By water
- Fan	Puller
. Number of blades	6
. Diameter	457 mm
- Thermostat	
. Start opening	77 °C to 85 °C
. Full opening	92 °C to 98 °C

ELECTRIC CIRCUIT

- Earth	Negative
- Battery	12 V - 105 Ah
- Alternator	14 V - 35 A (1st Assembly) 12 V - 55 A (2nd Assembly)
- Tension regulator	Incorporated into the alternator
- Starter	12 V - 2,2 kw

HYDROSTATIC TRANSMISSION

HYDROSTATIC PUMP

- Type	**A4VG56DA** With variable cubic capacity and with automatic power governor.
- Gear reverser	Electromagnetic 12V.
- Inching control	Hydraulic by valve TH7
- Main pump	
. Capacity MAXI	56 cm³
. Capacity MINI	0 cm³
. MAX. flow rate	141,68 L/min

Downloaded from www.Manualslib.com manuals search engine

. Working pressure	
(Up to pump N° : 3890010)	420 Bar
(From pump N° : 3890011)	380 Bar
- Boost pump	
. Cubic capacity	11,1 cm^3
. MAX. flow rate	27,19 L/min.
. Boost pressure MAX. r.p.m.	25 Bar (Transmission in neutral).

HYDROSTATIC MOTOR

- Type	**A6VM107DA** variable displacement
. Capacity MAXI	107 cm3
. Capacity MINI	26 cm3

TRANSFER BOX

- Type	**HURTH** Coupled with front axle.
- Number of forward speeds	1
- Number of reverse speeds	1

FRONT AXLE

- Type	**HURTH**
- Hub reducers	Epicyclic
- Differential lock	Foot pedal. Mechanical

BRAKE

- Type	Multidisc brake immersed in oil.
- Service brake	Foot pedal. Hydraulic brake acting on front wheels.
- Parking brake	Mechanical hand lever applied on the front wheels.

Downloaded from www.Manualslib.com manuals search engine

FROM MACHINE N° 142 127

ENGINE

- Type	**PERKINS 1004-42 AR 81155**
- Number of cylinders	4
- Number of strokes	4
- Injection system	Direct
- Ignition sequence	1.3.4.2
- Rocker arm clearance (Hot)	
. Inlet	0,20 mm
. Exhaust	0,45 mm
- Capacity	4233 cm³
- Bore	103 mm
- Stroke	127 mm
- Volumetric ratio	18.5 / 1
- Nominal running speed	2300 tr/mn
- Idle speed	825 tr/mn
- Full speed	2500 tr/mn
- Power ISO 3046-1	83 cv 61,5 kw
- Power ISO/TR 14396	85 cv 63 kw
- Power SAE	89 cv 65,5 kw
- Maximum torque ISO 3046-1	298 Nm to 1400 tr/mn
- Maximum torque ISO/TR 14396	300 Nm to 1400 tr/mn
- Air cleaner	dry 3 microns

COOLING CIRCUIT

- Type	By water
- Fan	Puller
. Number of blades	6
. Diameter	457 mm
- Thermostat	
. Start opening	77° C to 85° C
. Full opening	92° C to 98° C

ELECTRIC CIRCUIT

- Earth	Negative
- Battery	12 V - 105 Ah - 680 A EN
- Alternator	12 V - 65 A
. Type	Magneti Marelli A127
. Tension regulator	Incorporated into the alternator
- Starter	12 V
. Type	Magneti Marelli M127

HYDROSTATIC TRANSMISSION

HYDROSTATIC PUMP	
- Type	**A4VG56DA** With variable cubic capacity and with automatic power governor.
- Gear reverser	Electromagnetic 12V.
- Inching control	Hydraulic by valve TH7
- Main pump	
. Capacity MAXI	56 cm³
. Capacity MINI	0 cm³
. MAX. flow rate	141,68 L/mn
. Working pressure	380 Bar

Downloaded from www.Manualslib.com manuals search engine

- Boost pump	
. Cubic capacity	11,1 cm^3
. MAX. flow rate	27,19 L/min.
. Boost pressure MAX. r.p.m.	25 Bar (Transmission in neutral).

HYDROSTATIC MOTOR

- Type	**A6VM107DA** variable displacement
. Capacity MAXI	107 cm3
. Capacity MINI	26 cm3

TRANSFER BOX

- Type	**HURTH** Coupled with front axle.
- Number of forward speeds	1
- Number of reverse speeds	1

FRONT AXLE

- Type	**HURTH**
- Hub reducers	Epicyclic
- Differential lock	Foot pedal. Mechanical

BRAKE

- Type	Multidisc brake immersed in oil.
- Service brake	Foot pedal. Hydraulic brake acting on front wheels.
- Parking brake	Mechanical hand lever applied on the front wheels.

Downloaded from www.Manualslib.com manuals search engine

MSI 40

FRONT TYRES

STANDARD

DIMENSIONS	PRESSURE	TYRE LOAD UNLADEN	TYRE LOAD LOADED	PRESSURE ON THE CONTACT SURFACE UNLADEN	PRESSURE ON THE CONTACT SURFACE LOADED	AERA OF THE CONTACT SURFACE UNLADEN	AERA OF THE CONTACT SURFACE LOADED
315/70 R22,5 G391 GOOD YEAR	6,75 Bar	2000 Kg	5200 Kg	6,7 Kg/cm²	6,7 Kg/cm²	300 cm²	780 cm²

OPTION

DIMENSIONS	PRESSURE	TYRE LOAD UNLADEN	TYRE LOAD LOADED	PRESSURE ON THE CONTACT SURFACE UNLADEN	PRESSURE ON THE CONTACT SURFACE LOADED	AERA OF THE CONTACT SURFACE UNLADEN	AERA OF THE CONTACT SURFACE LOADED
12-5 R20 16PR MPT80 CONTINENTAL	5 Bar	2000 Kg	5200 Kg	3,6 Kg/cm²	4,2 Kg/cm²	560 cm²	1250 cm²
445/65 R19,5 Tubeless XZY 165K MICHELIN	6,3 Bar	2000 Kg	5200 Kg	4,3 Kg/cm²	5,7 Kg/cm²	470 cm²	905 cm²
16/70-20 14PR E91-2 DUNLOP	4,5 Bar	2000 Kg	5200 Kg	7,2 Kg/cm²	8,8 Kg/cm²	280 cm²	595 cm²
10.00-20 CSE SC10 CONTINENTAL (Solid)		2000 Kg	5200 Kg	5,5 Kg/cm²	8,4 Kg/cm²	365 cm²	620 cm²

REAR TYRES

STANDARD

DIMENSIONS	PRESSURE	TYRE LOAD UNLADEN	TYRE LOAD LOADED	PRESSURE ON THE CONTACT SURFACE UNLADEN	PRESSURE ON THE CONTACT SURFACE LOADED	AERA OF THE CONTACT SURFACE UNLADEN	AERA OF THE CONTACT SURFACE LOADED
225/75 R15 XZM 149 A5 MICHELIN	5 Bar	1850 Kg	650 Kg	5,4 Kg/cm²	3,1 Kg/cm²	345 cm²	210 cm²

OPTION

DIMENSIONS	PRESSURE	TYRE LOAD UNLADEN	TYRE LOAD LOADED	PRESSURE ON THE CONTACT SURFACE UNLADEN	PRESSURE ON THE CONTACT SURFACE LOADED	AERA OF THE CONTACT SURFACE UNLADEN	AERA OF THE CONTACT SURFACE LOADED
PPS 28-9x15 CSE SC10 CONTINENTAL (Solid)		1850 Kg	650 Kg	7,2 Kg/cm²	4,4 Kg/cm²	260 cm²	150 cm²

HYDRAULIC CIRCUIT

UP TO MACHINE N° : 109 832 EXCEPT FOR N° : 107 781

- Lifting, tilting, attachment circuit	
. Type of pump	Gear pump
. Flow rate at full speed	71,3 L/min.
. Pressure	200 Bar
. Capacity	31 cm³
- Steering direction	
. Type of pump	Gear pump
. Flow rate at full speed	27,6 L/min.
. Pressure	140 Bar
. Capacity	12 cm³
- Filtration	
. Return	10 Microns
- Hydraulic shock absorber	
. Capacities	1,4 L
. Pressure	120 Bar

Downloaded from www.Manualslib.com manuals search engine

HYDRAULIC CIRCUIT

UP TO MACHINE N° : 109 833 AND FOR N° : 107 781
UP TO MACHINE N° 130 517

- Type of pump	Gear pump
. Capacity	37 cm³
- Lifting, tilting, attachment circuit	
. Flow rate at full speed	85,1 L/mn
. Pressure	200 Bar
- Steering direction	
. Flow rate at full speed	Load control system
. Pressure	140 Bar
- Filtration	
. Return	10 Microns
. Suction **(Up to machine N° : 115 593)**	100 Microns
- Hydraulic shock absorber	
. Capacities	1,4 L
. Pressure	120 Bar

HYDRAULIC CIRCUIT

FROM MACHINE N° 130 518

- Type of pump	Gear pump
. Capacity	37 cm³
- Lifting, tilting, attachment circuit	
. Flow rate at full speed	92,5 L/mn
. Pressure	200 Bar
- Steering direction	
. Flow rate at full speed	Load control system
. Pressure	145 Bar
- Filtration	
. Return	10 Microns
. Suction	100 Microns
- Hydraulic shock absorber	
. Capacities	1,4 L
. Pressure	120 Bar

SPECIFICATIONS

- Level of sound pressure in the driver's cabin (According to norm prEN 12053 : 1995)	
. Cab model	80,5 dBA
- Travel speed of the lift truck	
. Forward unladen	24 km/h
. Reverse unladen	24 km/h
- Standard lift height	3700 mm (DUPLEX mast)
- Rated capacity with standard mast	4000 kg
- Load center	500 mm
- Weight of forks (Each)	100 kg

Downloaded from www.Manualslib.com manuals search engine

- Lifting movement (With standard mast)	
. Unladen lifting	0,525 m/s
. Rated load lifting	0,518 m/s
. Unladen lowering	0,424 m/s
. Rated load lowering	0,542 m/s
- Weight of lift truck with standard mast	
. Unladen	6975 kg
. Rated load	10975 kg
- Weight per axle with standard mast (Transport position)	
. Front unladen	3425 kg
rated load	9740 kg
. Rear unladen	3550 kg
rated load	1235 kg
- Drawbar pull	
. Unladen	2050 daN
. Rated load	3600 daN
- Maximum ramp negotiable in forward motion	
. Unladen	26 % to 1 km/h
. Rated load	30 % to 1 km/h
- Break out force at bucket teeth	daN

Downloaded from www.Manualslib.com manuals search engine

MSI 50

FRONT TYRES

STANDARD

DIMENSIONS	PRESSURE	TYRE LOAD		PRESSURE ON THE CONTACT SURFACE		AERA OF THE CONTACT SURFACE	
		UNLADEN	LOADED	UNLADEN	LOADED	UNLADEN	LOADED
315/70 R22,5 G391 GOOD YEAR	7,75 Bar	2050 Kg	6000 Kg	7,6 Kg/cm²	7,6 Kg/cm²	270 cm²	790 cm²

OPTION

DIMENSIONS	PRESSURE	TYRE LOAD		PRESSURE ON THE CONTACT SURFACE		AERA OF THE CONTACT SURFACE	
		UNLADEN	LOADED	UNLADEN	LOADED	UNLADEN	LOADED
12-5 R20 22PR MPT80 CONTINENTAL	7 Bar	2050 Kg	6000 Kg	4,1 Kg/cm²	5 Kg/cm²	500 cm²	1210 cm²
445/65 R19,5 Tubeless XZY 165K MICHELIN	7,5 Bar	2050 Kg	6000 Kg	4,8 Kg/cm²	6,7 Kg/cm²	430 cm²	895 cm²
16/70-20 14PR E91-2 DUNLOP	5,5 Bar	2050 Kg	6000 Kg	7,1 Kg/cm²	9,5 Kg/cm²	290 cm²	635 cm²
10.00-20 CSE SC10 CONTINENTAL (Solid)		2050 Kg	6000 Kg	5,6 Kg/cm²	9,5 Kg/cm²	370 cm²	635 cm²

REAR TYRES

STANDARD

DIMENSIONS	PRESSURE	TYRE LOAD		PRESSURE ON THE CONTACT SURFACE		AERA OF THE CONTACT SURFACE	
		UNLADEN	LOADED	UNLADEN	LOADED	UNLADEN	LOADED
225/75 R15 XZM 149 A5 MICHELIN	6 Bar	2300 Kg	800 Kg	6,3 Kg/cm²	3,8 Kg/cm²	370 cm²	210 cm²

OPTION

DIMENSIONS	PRESSURE	TYRE LOAD		PRESSURE ON THE CONTACT SURFACE		AERA OF THE CONTACT SURFACE	
		UNLADEN	LOADED	UNLADEN	LOADED	UNLADEN	LOADED
PPS 28-9x15 CSE SC10 CONTINENTAL (Solid)		2300 Kg	800 Kg	8 Kg/cm²	4,7 Kg/cm²	290 cm²	170 cm²

HYDRAULIC CIRCUIT

UP TO MACHINE N° : 109 832 EXCEPT FOR N° : 107 781

- Lifting, tilting, attachment circuit
  - . Type of pump — Gear pump
  - . Flow rate at full speed — 71,3 L/mn
  - . Pressure — 210 Bar
  - . Capacity — 31 cm³
- Steering direction
  - . Type of pump — Gear pump
  - . Flow rate at full speed — 27,6 L/mn
  - . Pressure — 140 Bar
  - . Capacity — 12 cm³
- Filtration
  - . Return — 10 Microns
- Hydraulic shock absorber
  - . Capacities — 1,4 L
  - . Pressure — 120 Bar

Downloaded from www.Manualslib.com manuals search engine

HYDRAULIC CIRCUIT

FROM MACHINE N° : 109 833 AND FOR N° : 107 781
UP TO MACHINE N° 130 517

- Type of pump	Gear pump
. Capacity	37 cm^3
- Lifting, tilting, attachment circuit	
. Flow rate at full speed	85,1 L/mn
. Pressure	200 Bar
- Steering direction	
. Flow rate at full speed	Load control system
. Pressure	140 Bar
- Filtration	
. Return	10 Microns
. Suction **(From machine N° : 115 593)**	100 Microns
- Hydraulic shock absorber	
. Capacities	1,4 L
. Pressure	120 Bar

HYDRAULIC CIRCUIT

FROM MACHINE N° 130 518

- Type of pump	Gear pump
. Capacity	37 cm^3
- Lifting, tilting, attachment circuit	
. Flow rate at full speed	92,5 L/mn
. Pressure	200 Bar
- Steering direction	
. Flow rate at full speed	Load control system
. Pressure	145 Bar
- Filtration	
. Return	10 Microns
. Suction	100 Microns
- Hydraulic shock absorber	
. Capacities	1,4 L
. Pressure	120 Bar

SPECIFICATIONS

- Level of sound pressure in the driver's cabin (According to norm prEN 12053 : 1995)	
. Cab model	80,5 dBA
- Travel speed of the lift truck	
. Forward unladen	24 km/h
. Reverse unladen	24 km/h
- Standard lift height	3700 mm (DUPLEX mast)
- Rated capacity with standard mast	5000 kg
- Load center	600 mm
- Weight of forks (Each)	130 kg

Downloaded from www.Manualslib.com manuals search engine

- Lifting movement (With standard mast)	
. Unladen lifting	0,451 m/s
. Rated load lifting	0,435 m/s
. Unladen lowering	0,348 m/s
. Rated load lowering	0,451 m/s
- Weight of lift truck with standard mast	
. Unladen	7900 kg
. Rated load	12900 kg
- Weight per axle with standard mast (Transport position)	
. Front unladen	3450 kg
rated load	11345 kg
. Rear unladen	4450 kg
rated load	1555 kg
- Drawbar pull	
. Unladen	2050 daN
. Rated load	3600 daN
- Maximum ramp negotiable in forward motion	
. Unladen	24 % to 1 km/h
. Rated load	25 % to 1 km/h
- Break out force at bucket teeth	daN

Downloaded from www.Manualslib.com manuals search engine

MAST CHARACTERISTICS

	DOUBLE MAST WITH ALL-ROUND VISION													
	MSI 40							MSI 50						
MAST	HL	Z	Y	LL	H	H1	H2	HL	Z	Y	LL	H	H1	H2
3m00	3050	10°	12°	–	2425	3977	54	3060	10°	12°	–	2425	3972	44
3m30	3350	10°	12°	–	2575	4277	54	3360	10°	12°	–	2575	4272	44
3m50	3550	10°	12°	–	2675	4477	54	3560	10°	12°	–	2675	4472	44
3m70	3750	10°	12°	–	2775	4677	54	3760	10°	12°	–	2775	4672	44
4m00	4050	10°	12°	–	2925	4977	54	4060	10°	12°	–	2925	4972	44
4m50	4550	10°	12°	–	3175	5477	54	4560	10°	12°	–	3175	5472	44
5m00	5050	10°	12°	–	3425	5977	54	5060	10°	12°	–	3425	5972	44

	DOUBLE MAST WITH TOTAL FREE-ACTING LIFT													
	MSI 40							MSI 50						
MAST	HL	Z	Y	LL	H	H1	H2	HL	Z	Y	LL	H	H1	H2
3m00	3050	10°	12°	1532	2450	3968	32	3060	10°	12°	1541	2450	3969	32
3m30	3350	10°	12°	1682	2600	4268	32	3360	10°	12°	1691	2600	4269	32
3m50	3550	10°	12°	1782	2700	4468	32	3560	10°	12°	1791	2700	4469	32
3m70	3750	10°	12°	1882	2800	4668	32	3760	10°	12°	1891	2800	4669	32
4m00	4050	10°	12°	2032	2950	4968	32	4060	10°	12°	2041	2950	4969	32

	TRIPLE MAST WITH TOTAL FREE-ACTING LIFT													
	MSI 40							MSI 50						
MAST	HL	Z	Y	LL	H	H1	H2	HL	Z	Y	LL	H	H1	H2
3m70	3750	10°	12°	1258	2175	4667	44	3760	10°	12°	1263	2175	4672	44
4m00	4050	10°	12°	1358	2275	4967	44	4060	10°	12°	1363	2275	4972	44
4m30	4350	10°	12°	1458	2375	5267	44	4360	10°	12°	1463	2375	5272	44
4m50	4550	10°	12°	1533	2450	5467	19	4560	10°	12°	1538	2450	5472	19
4m70	4750	10°	12°	1593	2510	5667	39	4760	10°	12°	1598	2510	5672	39
5m00	5050	10°	12°	1708	2625	5967	14	5060	10°	12°	1713	2625	5972	14
5m50	5550	10°	12°	1858	2775	6467	44	5560	10°	12°	1863	2775	6472	44
6m00	6050	10°	12°	2033	2950	6967	19	6060	10°	12°	2038	2950	6972	19

HL : Lift height in mm
Z : Forward tilting
Y : Backward tilting
LL : Free-acting lift in mm
H : Overall height with folded mast in mm
H1 : Overall height with spreaded out mast in mm
H2 : Carriage overshooting

Downloaded from www.Manualslib.com manuals search engine

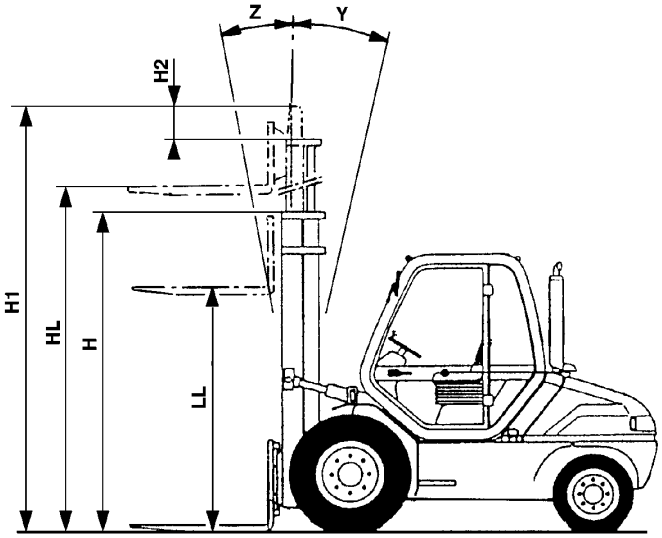

Downloaded from www.Manualslib.com manuals search engine

duma rent
https://truckmanualshub.com
Torkonjestraat 23
8510 Marke
Belgium
056 / 222 111
info@dumarent.be
www.dumarent.be

DIMENSIONS AND LOAD CHART

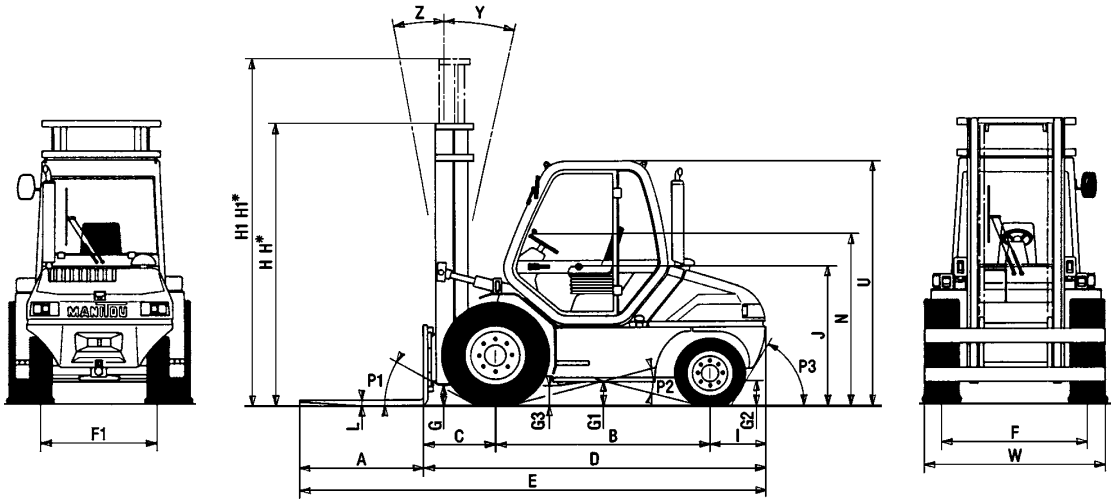

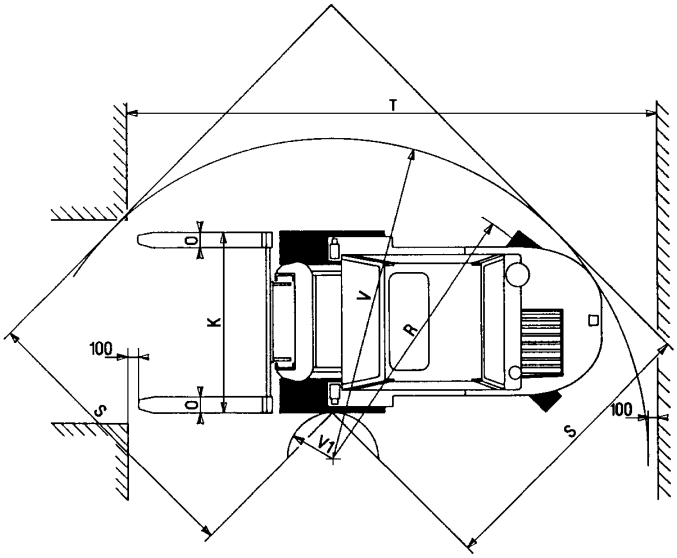

MSI 40

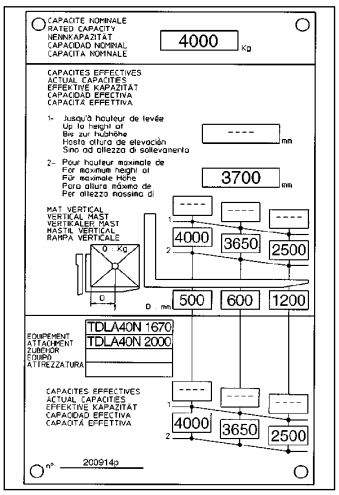

MSI 50

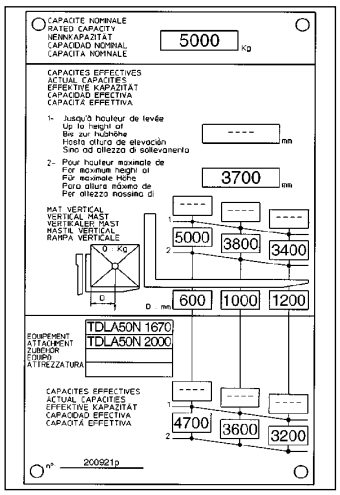

Downloaded from www.Manualslib.com manuals search engine

	MSI 40	MSI 50
A	1200 mm	1200 mm
B	2075 mm	2075 mm
C	692 mm	702 mm
D	3312 mm	3322 mm
E	4512 mm	4522 mm
F	1391 mm	1391 mm
F1	1135 mm	1135 mm
G	185 mm	185 mm
G1	220 mm	220 mm
G2	225 mm	225 mm
G3	210 mm	210 mm
H	2775 mm	2775 mm
H*	2575 mm	2575 mm
H1	4677 mm	4672 mm
H1*	4277 mm	4272 mm
I	545 mm	545 mm
J	1300 mm	1300 mm
K	1670 mm	1670 mm
L	50 mm	60 mm
N	1710 to 1775 mm	1710 to 1775 mm
O	150 mm	150 mm
P1	30 ° 58 %	30 ° 58 %
P2	27 ° 51 %	27 ° 51 %
P3	58 ° 160 %	58 ° 160 %
R	2700 mm	2700 mm
S	2760 mm	2760 mm
T	4992 mm	5002 mm
U	2370 mm	2370 mm
V	2900 mm	2900 mm
V1	200 mm	200 mm
W	1735 mm	1735 mm
Y	12 °	12 °
Z	10 °	10 °

H - H1 = Standard mast DUPLEX 3M70
H* - H1* = Option mast DUPLEX 3M30

Downloaded from www.Manualslib.com manuals search engine

duma rent
https://truckmanualshub.com
Torkonjestraat 23
8510 Marke
Belgium
056 / 222 111
info@dumarent.be
www.dumarent.be

INSTRUMENTS AND CONTROLS

UP TO MACHINE N° : 117 315

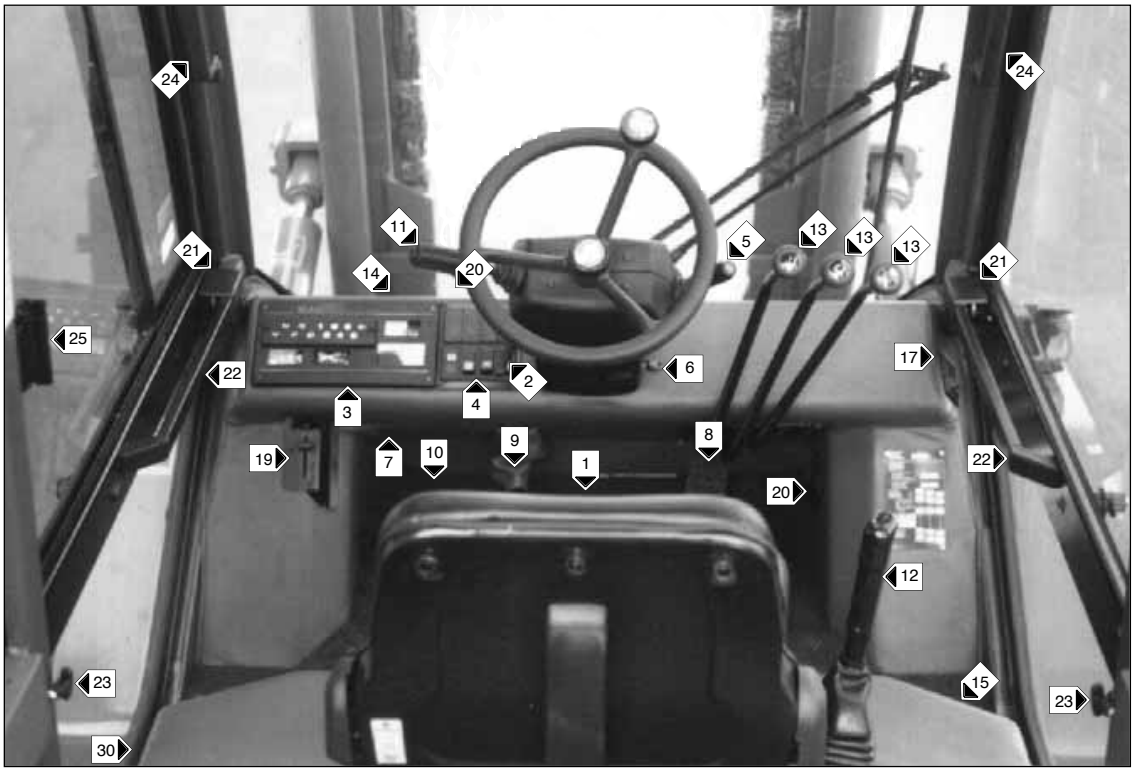

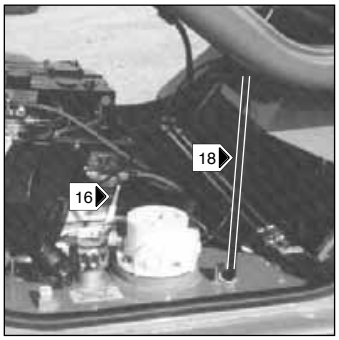

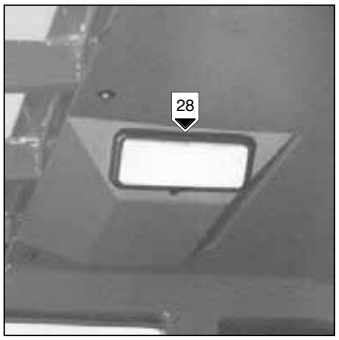

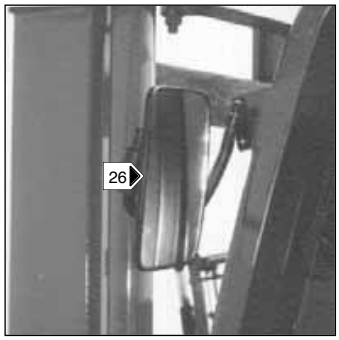

Downloaded from www.Manualslib.com manuals search engine

DESCRIPTION

1 - DRIVER'S SEAT

2 - TILTING HANDLE OF WHEEL

3 - INSTRUMENT PANEL

4 - SWITCH'S AND LAMP'S PANEL

5 - LIGHT SWITCH , HORN AND INDICATOR SWITCH

6 - IGNITION SWITCH

7 - FUSES BOX

8 - ACCELERATOR PEDAL

9 - INCHING AND SERVICE BRAKE PEDAL

10 - DIFFERENTIAL LOCK PEDAL

11 - FORWARD/REVERSE LEVER

12 - PARKING BRAKE LEVER

13 - HYDRAULIC CONTROL DISTRIBUTOR LEVERS

14 - BRAKING OIL TANK SLUDGE DOOR

15 - ENGINE SLUDGE DOOR

LIFTING CAB

16 - UNLOCKING HANDLE FOR CAB

17 - LIFTING CAB SWITCH (OPTION)

18 - SAFETY SHORE FOR LIFTING CAB

19 - CAB HEATER CONTROL

20 - HEATING VENTILATORS

21 - DOOR LOCKS

22 - CLOSING HANDLES FOR DOOR

23 - UNLOCKING HANDLES FOR OPEN DOOR

24 - ACCES HANDLES DRIVER'S CAB

25 - HANDLES FOR L.H. SIDE WINDOW OPENING

26 -OUTSIDE REARVIEW MIRROR

27 - WINDSCREEN WASHER TANK

28 - ROOF LIGHT

29 - TOWING PIN

30 - DOCUMENT HOLDER NET

31 - REAR LIGHTS AND INDICATORS

NOTA : All the terms such as : RIGHT, LEFT, FRONT, REAR are meant for an observer seated on driver's seat and looking in front of him.

Downloaded from www.Manualslib.com manuals search engine

1 - DRIVER'S SEAT

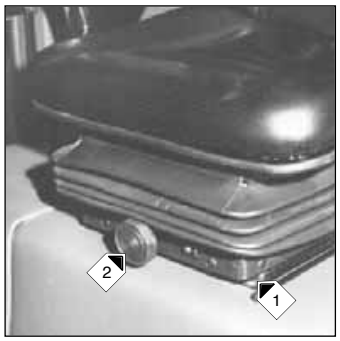

1st ASSEMBLY

FOR OPTIMAL COMFORT, THIS SEAT CAN BE ADJUSTED IN DIFFERENT WAYS.

LONGITUDINAL ADJUSTMENT

- Pull the locking lever 1 upwards.
- Slide the seat to the required position.
- Release the lever and ensure it returns to the lock position.

SEAT SUSPENSION ADJUSTMENT

- Refer to the seat's graduation.
- Turn handle 2 depending on the driver's weight.

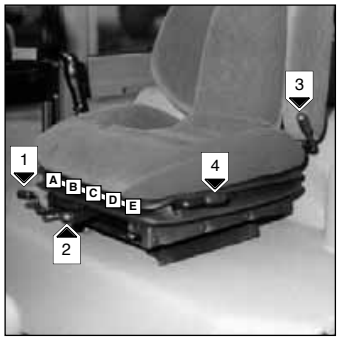

2nd ASSEMBLY

FOR OPTIMAL COMFORT, THIS SEAT CAN BE ADJUSTED IN DIFFERENT WAYS.

LONGITUDINAL ADJUSTMENT

- Pull the locking lever 1 upwards.
- Slide the seat to the required position.
- Release the lever and ensure it returns to the lock position.

SEAT SUSPENSION ADJUSTMENT

- Pull and lift up the locking lever 2 so as to place it into one of these five positions.

  Position A : Light-weight driver (50 kg).
  Position B : Intermediate.
  Position C : Middle-weight driver.
  Position D : Intermediate.
  Position E : Heavy-weight driver (120 kg).

ANGLE ADJUSTMENT OF THE BACK-REST

- Pull the locking lever 3 backwards.
- Tilt the back-rest into one of the three possible positions.
- Release the locking lever and ensure it returns to the lock position.

ANGLE ADJUSTMENT OF THE WHOLE SEAT

- Lift up the locking lever 4.
- Tilt the seat forwards or backwards.
- Release the lever and ensure it returns to the lock position.

2 - TILTING HANDLE OF WHEEL

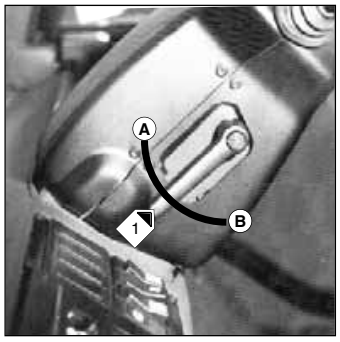

- Turn the lever 1 towards A for loosening.
- Tilt the steering wheel into the required position.
- Turn the lever 1 towards B for blocking.

Downloaded from www.Manualslib.com manuals search engine

duma rent
https://truckmanualshub.com/
Torkonjestraat 23
8510 Marke
Belgium
056 / 222 111
info@dumarent.be
www.dumarent.be

3 - INSTUMENT PANEL

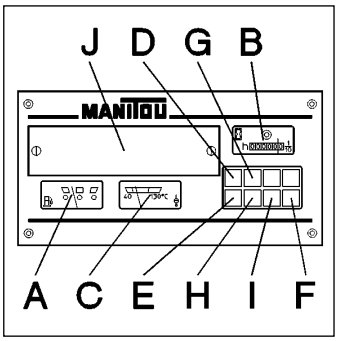

A - Fuel level gauge.
B - Hourmeter.
C - Water temperature gauge.
D - Green indicator lamp.
E - Red engine oil pressure lamp.
F - Red alternator charge lamp.
G - Blue main beam lamp.
H - Red air filter clog lamp.
I - Red hydrostatic transmission oil filter clog lamp.
J - Fuses box.

A - FUEL LEVEL GAUGE

B - HOURMETER
It shows the number of hours the fork lift truck has run. The hours are shown on the dial up to a multiple of thousand. The moving tell-tale shows the good working order of the apparatus.

C - WATER TEMPERATURE GAUGE
When the truck works in normal conditions the needle of the indicator should indicate 80° to 90° C.
If the needle indicates an abnormally high temperature (100° C maximum) , stop the engine immediately and investigate the cooling system for the cause of the malfunction.

D - GREEN INDICATOR LAMP
It is illuminated when the indicators are on and indicates that they are functioning properly.

E - RED ENGINE OIL PRESSURE LAMP
This lamp is illuminated when the ignition switch is in the ON position and should go out as soon as the fork lift truck starts. If this lamp stays on when the engine is running, stop the fork lift truck immediately and look for the cause (see oil level in engine crankcase).

F - RED ALTERNATOR CHARGE LAMP
This lamp is illuminated when the ignition switch is in the ON position and should go out as soon as the fork lift truck starts. If this lamp stays on when the engine is running, stop the fork lift truck immediately and check the electrical circuit as well as the alternator belt.

G - BLUE MAIN BEAM LAMP (OPTION)
The lamp is illuminated when lights are on main beam.

H - RED AIR FILTER CLOG LAMP
This lamp provides the operator with information about the condition of the filter cartridge. If this cartridge is clogged the lamp comes on (See cleaning and replacement requirements in chapter : FILTERS CARTRIDGES AND BELTS in paragraph : 3 - MAINTENANCE).

I - RED HYDROSTATIC TRANSMISSION OIL FILTER CLOG LAMP
This lamp provides the operator with information about the condition of the filter cartridge. If this cartridge is clogged the lamp comes on (See cleaning and replacement requirements in chapter : FILTERS CARTRIDGES AND BELTS in paragraph : 3 - MAINTENANCE).
NOTE : This lamp comes on by cold weather or when starting the fork lift truck, it goes off when the hydraulic oil reach the temperature of functionning.

Downloaded from www.Manualslib.com manuals search engine

J - FUSES BOX
Remove the cover to replace a fuse.The using is described herewith from L.H. to R.H. :

1 : fuse hand the left : Indicators (7,5A).
2 : Horn. + Stop swith (7,5A).
3 : OPTION R.H sidelight. + R.H rear light (7,5A).
4 : OPTION L.H sidelight + L.H rear light (7,5A).
5 : OPTION Dipped headlights (7,5A).
6 : Forward / Reverse (7,5A).
7 : Heating.+ 2nd heating OPTION (7,5A).
8 : Front windscreen wiper and windscreen washer + Brake oil level lamp (7,5A).
9 : OPTION Warning light (7,5A).
10 : OPTION (7,5A).
11 : OPTION (7,5A).
12 : OPTION Main beam (7,5A).

NOTE : Replace a used fuse with a new fuse of the same quality and capacity. Never reuse a repaired fuse.

4 - SWITCH'S AND LAMP'S PANEL

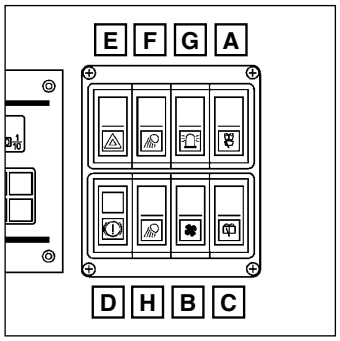

A - Front windscreen wiper switch and windscreen washer.
B - OPTION heater fan switch.
C - R ear windscreen washer switch.
E - OPTION warning light switch.
D - Brake oil level lamp.
F - OPTION working head light switch.
or
OPTION left working head light switch.
G - OPTION flashing alarm light switch.
H - OPTION working tail light switch.
or
OPTION left working tail light switch.

A - FRONT WINDSCREEN WIPER SWITCH AND WINDSCREEN WASHER
This two position switch, when set on the "down" position and simultaneously pressed, allows the windscreen-washer and the windscreen wiper to be operated, and when set on the "up" position, the windscreen wiper to be operated.

B - HEATER FAN SWITCH
This two speed switch allows warm or cold air to pass through the heating ventilators.

C - REAR WINDSCREEN WASHER SWITCH

D - BRAKE OIL LEVEL LAMP
This lamp comes on when the brake oil level is insufficient. If an abnormally low level is noted consult your dealer.

Downloaded from www.Manualslib.com manuals search engine

5 - Light switch, horn and indicator switch

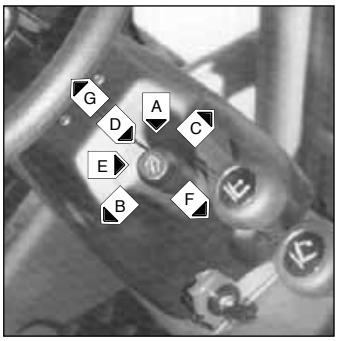

The switch controls the road lights and horn.

A - All lights are off, the rear direction indicators do not flash.
B - The right rear hand direction indicator flash.
C - The left rear hand direction indicator flash.
D - The sidelights (OPTION) and the rear lights are on.
E - The dipped headlights (OPTION) and the rear lights are on.
F - The main beam headlights (OPTION) and the rear lights are on.
G - Headlight signal (OPTION).

To operate the horn, press the switch.

NOTE : The positions D - E - F - G can be carried out without the ignition being on.

6 - Ignition switch

The key switch has five positions :

P - Ignition off, parking position.
O - Ignition switched off and engine stopped.
I - Ignition on.
II - Heating.
III - The engine starts, return to position I as soon as the key is released

7 - Fuses box

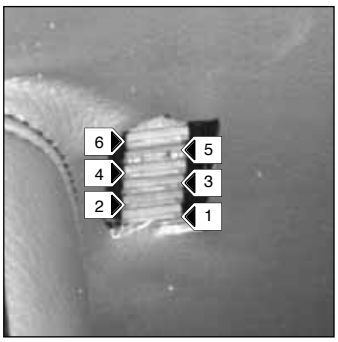

Remove the cover to replace a fuse, which is to be used as per the following numbers :

1 - OPTION Working tail lights (10A).
OPTION Left working tail light (10A).
2 - OPTION Working head lights (10A).
OPTION Left working head light (10A).
3 - OPTION Flashing alarm light (7,5A).
4 - OPTION.Cabin lifting (10A).
5 - OPTION (10A).
6 - Rear windscreen wiper (7,5A).

NOTE : Replace a worn fuse by a new fuse of equal quality and capacity. Do not re-use a repaired fuse.

8 - Accelerator pedal

9 - Inching and service brake pedal

This pedal acts in two stages :
In the first stage during the braking clearance stroke, it acts progressively the hydrostatic transmission to do a slow approach with all the power of the engine.
In the second stage it acts both on front wheels through a brake hydraulic system, and allows to slow down and stop the fork lift truck.

Downloaded from www.Manualslib.com manuals search engine

10 - Differential lock pedal

The differential lock enables the drive wheels to turn at the same speed irrespective of the state of the ground.

- Press the pedal and hold it in that position for the time during which locking is required.
- To release the differential lock simply release the pedal, which should automatically return to its initial position.

When the differential lock is on, the truck should always be driven in a straight line and at low speed.

11 - Forward/reverse lever

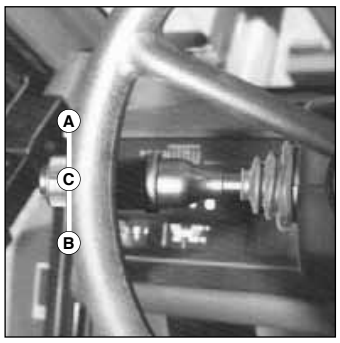

When operating this control the truck should be travelling at slow speed and not accelerating.

FORWARD : Push the lever forwards (Position A).
REVERSE : Pull the lever backwards (Position B).
NEUTRAL : To start the truck, the lever must be in neutral (Position C).

12 - Parking brake lever

The parking brake acts on the two front wheels.

- To tighten the parking brake, pull the lever backwards (Position A).
- To untighten the parking brake, push the lever forwards (Position B).

13 - Hydraulic control distributor levers

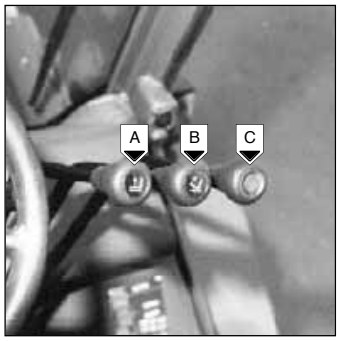

LEVER A : Single acting section, controle the raising and lowering of the mast.
- Pull the lever backwards when raising of the mast.
- Push the lever forwards when lowering of the mast.

NOTE : The engine r.p.m. automatically increases when lifting the load.

LEVER B : Double acting section, controle the tilting of the mast.
- Pull the lever backwards when reverse tilt of the mast.
- Push the lever forwards when forward tilt of the mast.

LEVER C : Double acting section, intented for the control of additional equipment.

Do not attempt to alter the hydraulic system pressure by interfering with the pressure regulating valve. In the event of suspected malfunction, contact your dealer.

ANY ALTERATION MAY RENDER THE WARRANTY NULL AND VOID.

Downloaded from www.Manualslib.com manuals search engine

duma rent
https://truckmanualshub.com
Torkonjestraat 23
8510 Marke
Belgium
056 / 222 111
info@dumarent.be
www.dumarent.be

14 - BRAKING OIL TANK SLUDGE DOOR

15 - ENGINE SLUDGE DOOR

A

LIFTING CAB

MANUAL LIFTING WITH AIR SPRING IN STANDARD

Be sure that the mast is tilted forward to the maximum and that the engine is stopped before lifting the cab.

UNLOCKING OF THE CAB :
- Close the L.H. door.
- Open the R.H. door.
- Open the engine sludge door 15 (Fig. A).
- Push the lever 16 (Fig. B) forward (position A) to unlock the lifting cab
- Close the engine sludge door 15 (Fig. A).
- Close the R.H. door.

B

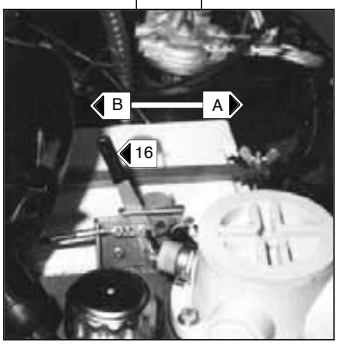

LIFTING OF THE CAB :
- Lift the cab (Fig. C) and incline to the maximum forward.
- Bring back the lever 16 (Fig. B).initial position (position B).
- Engage the safety shore 18 (Fig. D) in its clip ; vertically under the cab.

C

LOWERING OF THE CAB :
- Re-position the safety shore 18 (Fig. D).
- To decrease the necessary effort to tilt the cab backward, open the R.H. door and lock it in open position.
- Lower the cab by pulling on the door handle and be sure of its lock.
- Re-close the R.H. door.

ELECTRICAL LIFTING IN OPTION

Be sure that the mast is tilted forward to the maximum and that the engine is stopped before lifting the cab.

UNLOCKING OF THE CAB :
- Close the L.H. door.
- Open the R.H. door.
- Open the engine sludge door 15 (Fig. A).
- Push the lever 16 (Fig. B) forward (position A) to unlock the lifting cab.
- Close the engine sludge door 15 (Fig. A).
- Put the ignition on in the lift truck.

D

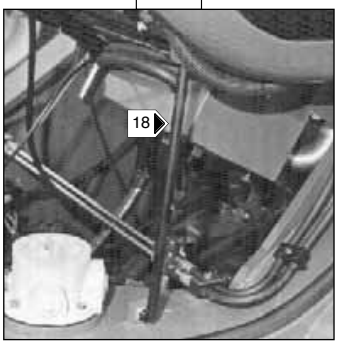

Downloaded from www.Manualslib.com manuals search engine

LIFTING OF THE CAB :
- Let the R.H. door of the cab to be half open and press on the top of the switch 17 (Fig. E) to incline the cab forward to the maximum.
- Bring back the lever 16 (Fig. B).initial position (position B).
- Close the R.H. door.
- Engage the safety shore 18 (Fig. D) in its clip vertically under the cab.

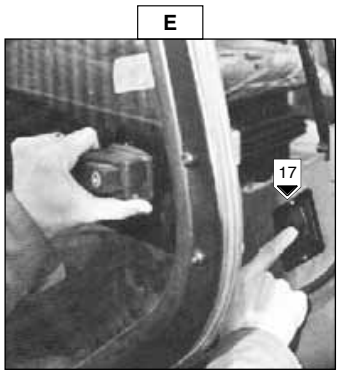

Check that any object left in the driver's stand cannot impede the operation.

LOWERING OF THE CAB :
- Re-position the safety shore 18 (Fig. D).
- Half open the R.H. door of the cab, press on the bottom of the switch 17 (Fig. E) to lower the cab in its initial position and be sure of the locking.
- Re-close the R.H. door.

Check that nothing or nobody can impede the lowering of the cabin.

19 - CAB HEATER CONTROL

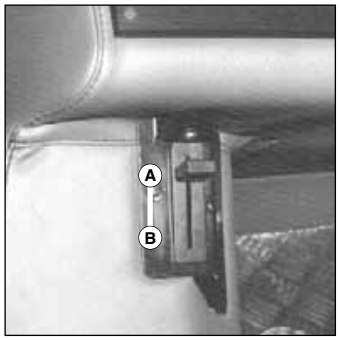

Allows the temperature inside the cab to be adjusted.

A - With the valve closed, the blower delivers fresh air.
B - With the valve opened completely, the blower delivers warm air.

The intermediate positions allow the temperature inside the cab to be adjusted.

20 - HEATING VENTILATORS

These heating ventilators allow air ventilation to be directed inside the cab.

21 - DOOR LOOCKS

22 - CLOSING HANDLES FOR DOOR

23 - UNLOCKING HANDELS FOR OPEN DOOR

24 - ACCES HANDELS DRIVER'S CAB

Downloaded from www.Manualslib.com manuals search engine

25 - Handles for L.H. side window opening

26 - Outside rearview mirror

27 - Windscreen washer tank

Check the level in the windscreen washer tank regularly, and top up, if necessary, with water plus a product for windscreen washers and antifreeze in winter, via the filler port 1.

28 - Roof light

The switch is integral with the roof light.

29 - Towing pin

Located at the back of the truck, this pin makes it possible to couple a trailer. The capacity is limited for each lift truck by the Permissible Total Moveable Weight (P. T. M. W.), the drawbar pull and the maximum vertical drawbar pull on the towing pin. This information is indicated on the manufacturer's plate on each lift truck (See chapter : IDENTIFICATION OF THE LIFT TRUCK in paragraph : 2 - DESCRIPTION).

NOTE : For towing, optional solutions exist, consult your dealer.

Before towing trailers, ensure that the clip is fully engaged in the towing pin.

30 - Document holder net

Make sure that the operator's manual is in the right place, i.e. in the document holder net.

31 - Rear lights and indicators

A - Left rear indicator.
B - Left rear stoplight.
C - Left tail light.
D - Right tail light.
E - Right rear stoplight.
F - Right rear indicator.

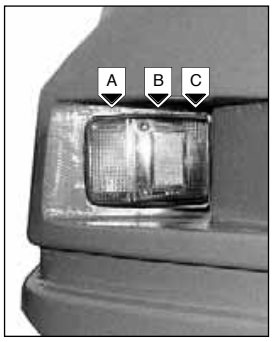

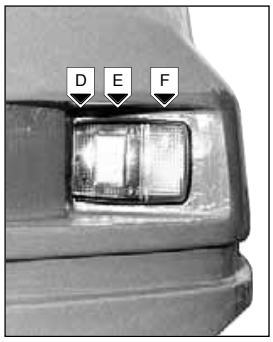

Downloaded from www.Manualslib.com manuals search engine

duma rent
https://truckmanualshub.com
Torkonjestraat 23
8510 Marke
Belgium
056 / 222 111
info@dumarent.be
www.dumarent.be

INSTRUMENTS AND CONTROLS

FROM MACHINE N° : 117 316

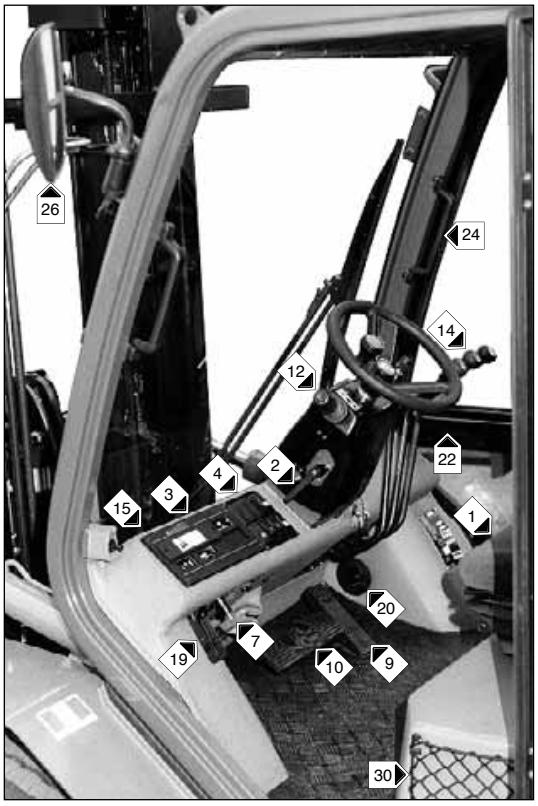

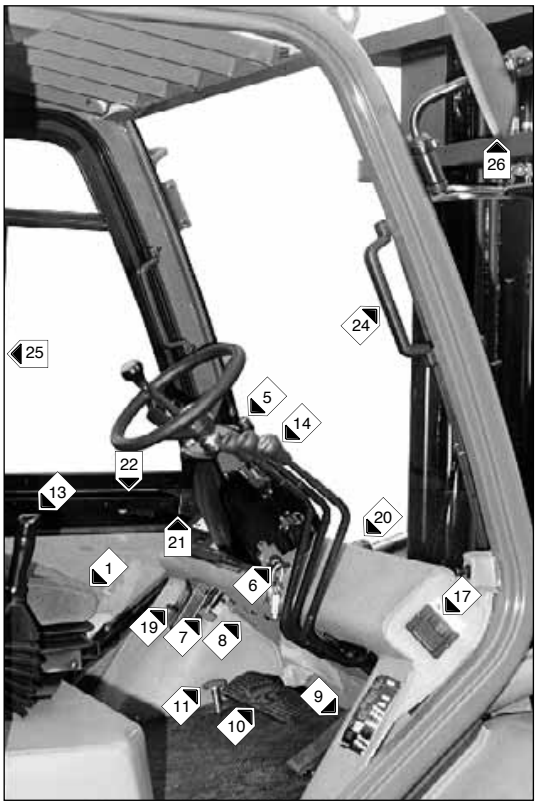

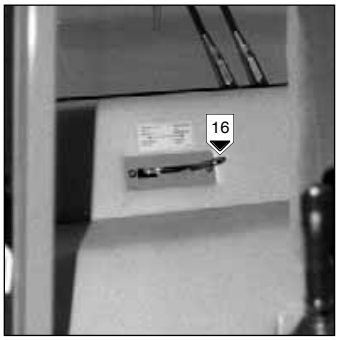

Downloaded from www.Manualslib.com manuals search engine

DESCRIPTION

1 - DRIVER'S SEAT

2 - TILTING HANDLE OF WHEEL

3 - INSTRUMENT PANEL

4 - SWITCH'S AND LAMP'S PANEL

5 - LIGHT SWITCH , HORN AND INDICATOR SWITCH

6 - IGNITION SWITCH

7 - KEY-OPERATED BATTERY DISCONNECTING DEVICE

8 - FUSES BOX

9 - ACCELERATOR PEDAL

10 - INCHING AND SERVICE BRAKE PEDAL

11 - DIFFERENTIAL LOCK PEDAL

12 - FORWARD/REVERSE LEVER

3 - PARKING BRAKE LEVER

14 - HYDRAULIC CONTROL DISTRIBUTOR LEVERS

15 - BRAKING OIL TANK SLUDGE DOOR

LIFTING CAB

16 - UNLOCKING HANDLE FOR CAB

17 - LIFTING CAB SWITCH

18 - SAFETY SHORE FOR LIFTING CAB

19 - CAB HEATER CONTROL

20 - HEATING VENTILATORS

21 - DOOR LOCKS

22 - CLOSING HANDLES FOR DOOR

23 - UNLOCKING HANDLES FOR OPEN DOOR

24 - ACCES HANDLES DRIVER'S CAB

25 - HANDLES FOR L.H. SIDE WINDOW OPENING

26 - OUTSIDE REARVIEW MIRROR

27 - WINDSCREEN WASHER TANK

28 - ROOF LIGHT

29 - TOWING PIN

30 - DOCUMENT HOLDER NET

31 - REAR LIGHTS AND INDICATORS

32 - SAFETY BELT

NOTA : All the terms such as : RIGHT, LEFT, FRONT, REAR are meant for an observer seated on driver's seat and looking in front of him.

Downloaded from www.Manualslib.com manuals search engine

1 - DRIVER'S SEAT

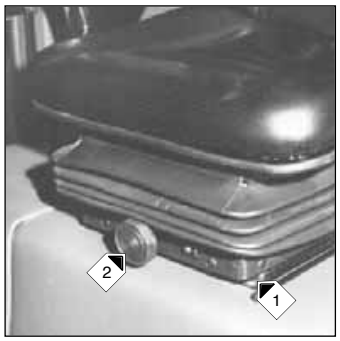

1st ASSEMBLY

FOR OPTIMAL COMFORT, THIS SEAT CAN BE ADJUSTED IN DIFFERENT WAYS.

LONGITUDINAL ADJUSTMENT
- Pull the locking lever 1 upwards.
- Slide the seat to the required position.
- Release the lever and ensure it returns to the lock position.

SEAT SUSPENSION ADJUSTMENT
- Refer to the seat's graduation.
- Turn handle 2 depending on the driver's weight.

2nd ASSEMBLY

FOR OPTIMAL COMFORT, THIS SEAT CAN BE ADJUSTED IN DIFFERENT WAYS.

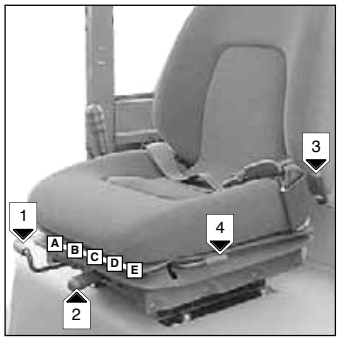

LONGITUDINAL ADJUSTMENT
- Pull the locking lever 1 upwards.
- Slide the seat to the required position.
- Release the lever and ensure it returns to the lock position.

SEAT SUSPENSION ADJUSTMENT
- Pull and lift up the locking lever 2 so as to place it into one of these five positions.

  Position A : Light-weight driver (50 kg).
  Position B : Intermediate.
  Position C : Middle-weight driver.
  Position D : Intermediate.
  Position E : Heavy-weight driver (120 kg).

ANGLE ADJUSTMENT OF THE BACK-REST
- Pull the locking lever 3 backwards.
- Tilt the back-rest into one of the three possible positions.
- Release the locking lever and ensure it returns to the lock position.

ANGLE ADJUSTMENT OF THE WHOLE SEAT
- Lift up the locking lever 4.
- Tilt the seat forwards or backwards.
- Release the lever and ensure it returns to the lock position.

2 - TILTING HANDLE OF WHEEL

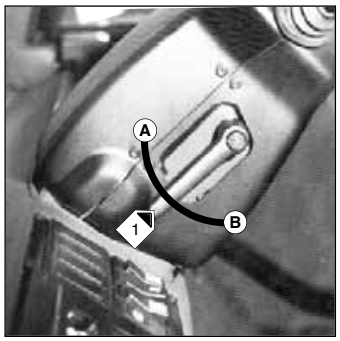

- Turn the lever 1 towards A for loosening.
- Tilt the steering wheel into the required position.
- Turn the lever 1 towards B for blocking.

Downloaded from www.Manualslib.com manuals search engine

duma rent
https://truckmanualshub.com/
Torkonjestraat 23
8510 Marke
Belgium
056 / 222 111
info@dumarent.be
www.dumarent.be

3 - INSTUMENT PANEL

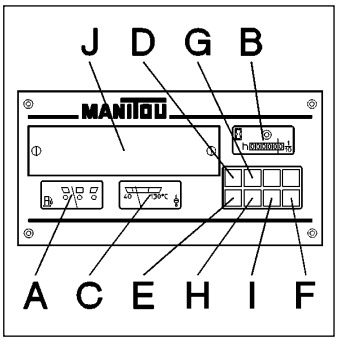

A - Fuel level gauge.
B - Hourmeter.
C - Water temperature gauge.
D - Green indicator lamp.
E - Red engine oil pressure lamp.
F - Red alternator charge lamp.
G - Blue main beam lamp.
H - Red air filter clog lamp.
I - Red hydrostatic transmission oil filter clog lamp.
J - Fuses box.

A - FUEL LEVEL GAUGE

B - HOURMETER
It shows the number of hours the fork lift truck has run. The hours are shown on the dial up to a multiple of thousand. The moving tell-tale shows the good working order of the apparatus.

C - WATER TEMPERATURE GAUGE
When the truck works in normal conditions the needle of the indicator should indicate 80° to 90° C.
If the needle indicates an abnormally high temperature (100° C maximum) , stop the engine immediately and investigate the cooling system for the cause of the malfunction.

D - GREEN INDICATOR LAMP
It is illuminated when the indicators are on and indicates that they are functioning properly.

E - RED ENGINE OIL PRESSURE LAMP
This lamp is illuminated when the ignition switch is in the ON position and should go out as soon as the fork lift truck starts. If this lamp stays on when the engine is running, stop the fork lift truck immediately and look for the cause (see oil level in engine crankcase).

F - RED ALTERNATOR CHARGE LAMP
This lamp is illuminated when the ignition switch is in the ON position and should go out as soon as the fork lift truck starts. If this lamp stays on when the engine is running, stop the fork lift truck immediately and check the electrical circuit as well as the alternator belt.

G - BLUE MAIN BEAM LAMP (OPTION)
The lamp is illuminated when lights are on main beam.

H - RED AIR FILTER CLOG LAMP
This lamp provides the operator with information about the condition of the filter cartridge. If this cartridge is clogged the lamp comes on (See cleaning and replacement requirements in chapter : FILTERS CARTRIDGES AND BELTS in paragraph : 3 - MAINTENANCE).

I - RED HYDROSTATIC TRANSMISSION OIL FILTER CLOG LAMP
This lamp provides the operator with information about the condition of the filter cartridge. If this cartridge is clogged the lamp comes on (See cleaning and replacement requirements in chapter : FILTERS CARTRIDGES AND BELTS in paragraph : 3 - MAINTENANCE).
NOTE : This lamp comes on by cold weather or when starting the fork lift truck, it goes off when the hydraulic oil reach the temperature of functionning.

Downloaded from www.Manualslib.com manuals search engine

J - FUSES BOX

Remove the cover to replace a fuse.The using is described herewith from L.H. to R.H :

1 : Fuse hand the left : Indicators (7,5A).
2 : Horn. + Stop swith (7,5A).
3 : OPTION R.H sidelight. + R.H rear light (7,5A).
4 : OPTION L.H sidelight + L.H rear light (7,5A).
5 : OPTION Dipped headlights (7,5A).
6 : Forward / Reverse (7,5A).
7 : Heating.+ 2nd heating OPTION (7,5A).
8 : Front windscreen wiper and windscreen washer + Brake oil level lamp (7,5A).
9 : OPTION Warning light (7,5A).
10 : OPTION (7,5A).
11 : OPTION (7,5A).
12 : OPTION Main beam (7,5A).

NOTE : Replace a used fuse with a new fuse of the same quality and capacity. Never reuse a repaired fuse.

4 - SWITCH'S AND LAMP'S PANEL

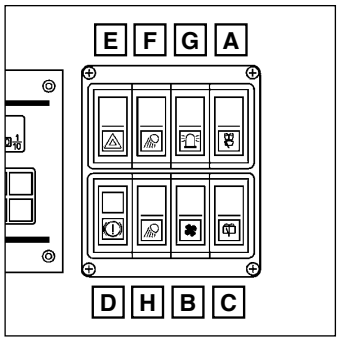

A - Front windscreen wiper switch and windscreen washer.
B - OPTION heater fan switch.
C - Rear windscreen washer switch.
E - OPTION warning light switch.
D - Brake oil level lamp.
F - OPTION working head light switch.
or
OPTION left working head light switch.
G - OPTION flashing alarm light switch.
H - OPTION working tail light switch.
or
OPTION left working tail light switch.

A - FRONT WINDSCREEN WIPER SWITCH AND WINDSCREEN WASHER

This two position switch, when set on the "down" position and simultaneously pressed, allows the windscreen-washer and the windscreen wiper to be operated, and when set on the "up" position, the windscreen wiper to be operated.

B - HEATER FAN SWITCH

This two speed switch allows warm or cold air to pass through the heating ventilators.

C - REAR WINDSCREEN WASHER SWITCH

D - BRAKE OIL LEVEL LAMP

This lamp comes on when the brake oil level is insufficient. If an abnormally low level is noted consult your dealer.

Downloaded from www.Manualslib.com manuals search engine

5 - Light switch, horn and indicator switch

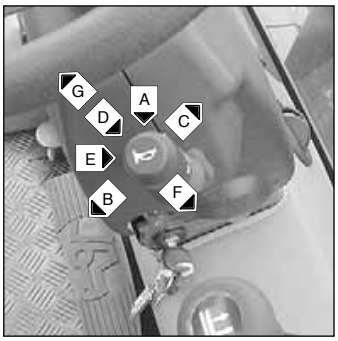

The switch controls the road lights and horn.

A - All lights are off, the rear direction indicators do not flash.
B - The right rear hand direction indicator flash.
C - The left rear hand direction indicator flash.
D - The sidelights (OPTION) and the rear lights are on.
E - The dipped headlights (OPTION) and the rear lights are on.
F - The main beam headlights (OPTION) and the rear lights are on.
G - Headlight signal (OPTION).

To operate the horn, press the switch.

NOTE : The positions D - E - F - G can be carried out without the ignition being on.

6 - Ignition switch

The key switch has five positions :

P - Ignition off, parking position.
O - Ignition switched off and engine stopped.
I - Ignition on.
II - Heating.
III - The engine starts, return to position I as soon as the key is released

7 - Key-operated battery disconnecting device

Enables the battery to be rapidly cut off from the electric circuit in the event of a short circuit or a fire.

8 - Fuses box

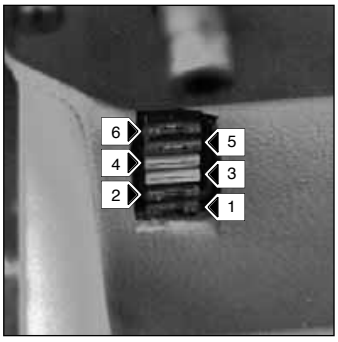

Remove the cover to replace a fuse, which is to be used as per the following numbers :

1 - OPTION Working tail lights (10A).
OPTION Left working tail light (10A).
2 - OPTION Working head lights (10A).
OPTION Left working head light (10A).
3 - OPTION Flashing alarm light (7,5A).
4 - Cabin lifting (10A).
5 - OPTION (10A).
6 - Rear windscreen wiper (7,5A).

NOTE : Replace a worn fuse by a new fuse of equal quality and capacity. Do not re-use a repaired fuse.

9 - Accelerator pedal

Downloaded from www.Manualslib.com manuals search engine

10 - INCHING AND SERVICE BRAKE PEDAL

This pedal acts in two stages :
In the first stage during the braking clearance stroke, it acts progressively the hydrostatic transmission to do a slow approach with all the power of the engine.
In the second stage it acts both on front wheels through a brake hydraulic system, and allows to slow down and stop the fork lift truck.

11 - DIFFERENTIAL LOCK PEDAL

The differential lock enables the drive wheels to turn at the same speed irrespective of the state of the ground.

- Press the pedal and hold it in that position for the time during which locking is required.
- To release the differential lock simply release the pedal, which should automatically return to its initial position.

When the differential lock is on, the truck should always be driven in a straight line and at low speed.

12 - FORWARD/REVERSE LEVER

The lift truck must be stationary when operating the forward / reverse lever.

FORWARD	: 1st ASSEMBLY : Push the lever forwards (Position A).
	: 2nd ASSEMBLY : Lift slightly and push the lever forwards (Position A).
REVERSE	: 1st ASSEMBLY : Pull the lever backwards (Position B).
	: 2nd ASSEMBLY : Lift slightly and pull the lever backwards (Position B).
NEUTRAL	: To start the truck, the lever must be in neutral (Position C).

NOTE : An OPTION reverse lights exists, these lights are automatically turned on when passing into reverse gear. An OPTION reverse gear horn is also available.

13 - PARKING BRAKE LEVER

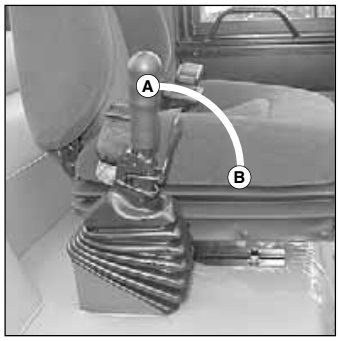

The parking brake acts on the two front wheels.

To prevent accidental loosening or release, the lever is fitted with safety locking (2nd ASSEMBLY).

- To apply the parking brake, pull the lever backwards (Position A).
- To loosen the parking brake, release and push the lever forwards (Position B).

Downloaded from www.Manualslib.com manuals search engine

14 - HYDRAULIC CONTROL DISTRIBUTOR LEVERS

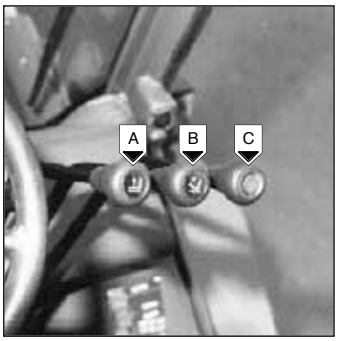

LEVER A : Single acting section, controle the raising and lowering of the mast.

- Pull the lever backwards when raising of the mast.
- Push the lever forwards when lowering of the mast.

NOTE : The engine r.p.m. automatically increases when lifting the load.

LEVER B : Double acting section, controle the tilting of the mast.
- Pull the lever backwards when reverse tilt of the mast.
- Push the lever forwards when forward tilt of the mast.

LEVER C : Double acting section, intented for the control of additional equipment.

Do not attempt to alter the hydraulic system pressure by interfering with the pressure regulating valve. In the event of suspected malfunction, contact your dealer.
ANY ALTERATION MAY RENDER THE WARRANTY NULL AND VOID.

15 - BRAKING OIL TANK SLUDGE DOOR

LIFTING CAB

Be sure that the mast is tilted forward to the maximum and that the engine is stopped before lifting the cab.

UNLOCKING OF THE CAB :
- Close the L.H. door.
- Open the R.H. door.
- Push the lever 16 (Fig. A) toward the R.H.(position A) to unlock the lifting cab.
- Put the ignition.

A

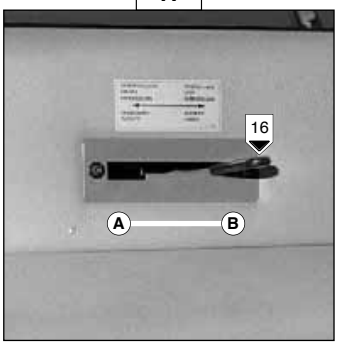

LIFTING OF THE CAB :
- Let the R.H. door of the cab to be half open and press on the top of the switch 17 (Fig. B) to incline the cab forward to the maximum.
- Bring back the lever 16 (Fig. A).initial position (position B).
- Close the R.H. door.
- Engage the safety shore 18 (Fig. C) in its clip vertically under the cab.

Check that any object left in the driver's stand cannot impede the operation.

B

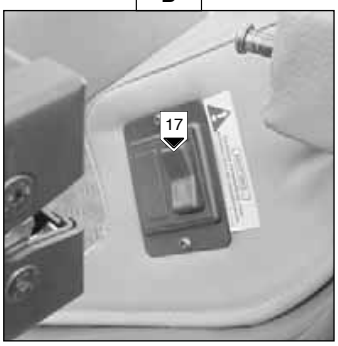

Downloaded from www.Manualslib.com manuals search engine

LOWERING OF THE CAB :
- Re-position the safety shore 18 (Fig. D).
- Half open the R.H. door of the cab, press on the bottom of the switch 17 (Fig. E) to lower the cab in its initial position and be sure of the locking.
- Re-close the R.H. door.

Check that nothing or nobody can impede the lowering of the cabin.

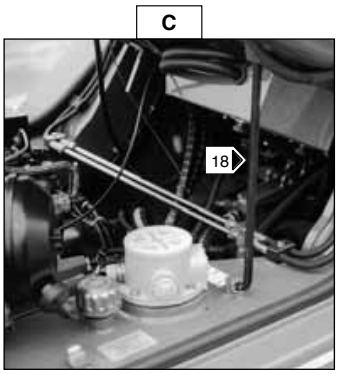

19 - CAB HEATER CONTROL

Allows the temperature inside the cab to be adjusted.

A - With the valve closed, the blower delivers fresh air.
B - With the valve opened completely, the blower delivers warm air.

The intermediate positions allow the temperature inside the cab to be adjusted.

20 - HEATING VENTILATORS

These heating ventilators allow air ventilation to be directed inside the cab.

21 - DOOR LOOCKS

22 - CLOSING HANDLES FOR DOOR

23 - UNLOCKING HANDELS FOR OPEN DOOR

24 - ACCES HANDELS DRIVER'S CAB

25 - HANDLES FOR L.H. SIDE WINDOW OPENING

26 - OUTSIDE REARVIEW MIRROR

Downloaded from www.Manualslib.com manuals search engine

27 - WINDSCREEN WASHER TANK

Check the level in the windscreen washer tank regularly, and top up, if necessary, with water plus a product for windscreen washers and antifreeze in winter, via the filler port 1.

28 - ROOF LIGHT

The switch is integral with the roof light.

29 - TOWING PIN

Located at the back of the truck, this pin makes it possible to couple a trailer. The capacity is limited for each lift truck by the Permissible Total Moveable Weight (P. T. M. W.), the drawbar pull and the maximum vertical drawbar pull on the towing pin. This information is indicated on the manufacturer's plate on each lift truck (See chapter : IDENTIFICATION OF THE LIFT TRUCK in paragraph : 2 - DESCRIPTION).

NOTE : For towing, optional solutions exist, consult your dealer.

Before towing trailers, ensure that the clip is fully engaged in the towing pin.

30 - DOCUMENT HOLDER NET

Make sure that the operator's manual is in the right place, i.e. in the document holder net.

31 - REAR LIGHTS AND INDICATORS

A - Left rear indicator.
B - Left rear stoplight.
C - Left tail light.
D - Right tail light.
E - Right rear stoplight.
F - Right rear indicator.

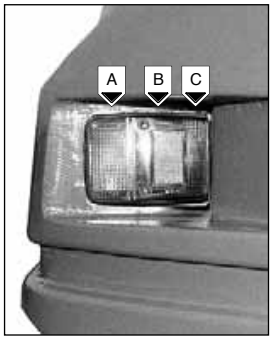

Downloaded from www.Manualslib.com manuals search engine

32 - SAFETY BELT

UP TO MACHINE N° 134 413

- Sit correctly on the seat.
- Check that seat belt is not twisted.
- Place the seat belt at hip level and not across the stomach.
- Attach the seat belt and check that it locks.
- Adjust the seat belt to your body shape without squeezing your hip.

In no event should the lift truck be used if the seat belt is defective (Fixing, locking, cuts, tears, etc.). Repair or replace the seat belt immediately.

Downloaded from www.Manualslib.com manuals search engine

DESCRIPTION AND OPERATION OF ELECTRIC AND HYDRAULIC OPTIONS

1 - FLASHING LIGHT

The flashing light is dismountable to make it possible, for example, to reduce the bulkiness of the lift truck or to avoid being stolen.

- Unscrew the screw 1 and lay down the flashing light.
- Protect the bracket 2 with the cap 3.

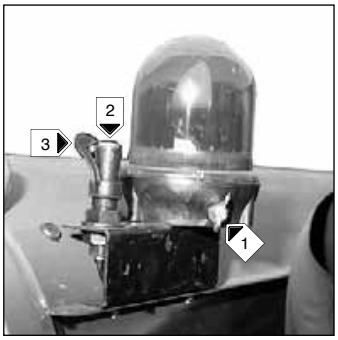

2 - FRONT LIGHTS AND INDICATORS

A - Left front indicator.
B - Left front dipped headlight and main beam.
C - Left front sidelight.
D - Right front dipped headlight and main beam.
E - Right front sidelight.
F - Right front indicator.

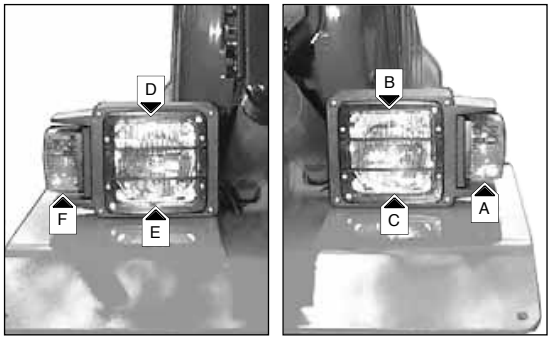

3 - ADAPTATION 4TH AND 5TH SINGLE-ACTING OR DOUBLE-ACTING DISTRIBUTOR ELEMENT

LEVER A : Intended for controlling a single or double acting additional equipment.

LEVER B : Intended for controlling a single or double acting additional equipment.

4 - HYDRAULIC MANIPULATOR ADAPTATION

LEVER A : Controls the load lifting and the mast tilting.
- The lever backwards for backward tilting of the mast.
- The lever forwards for forward tilting of the mast.
- The lever to the right for load lifting.
- The lever to the left for load lowering.

NOTE : The engine r.p.m. automatically increases when lifting the load.

LEVER B : Designed for additional equipment control.

LEVER C : Designed for additional equipment control.

Downloaded from www.Manualslib.com manuals search engine

5 - FOOT ADAPTATION GEAR REVERSER

The lift truck must be stationary when operating the forward / reverse lever.

FORWARD : Press the pedal 1 on the right.
REVERSE : Press the pedal 2 on the left.
NEUTRAL : To start the lift truck, do not press the reverser pedals.

Downloaded from www.Manualslib.com manuals search engine

3 - MAINTENANCE

Downloaded from www.Manualslib.com manuals search engine

Downloaded from www.Manualslib.com manuals search engine

FILTERS CARTRIDGES AND BELTS

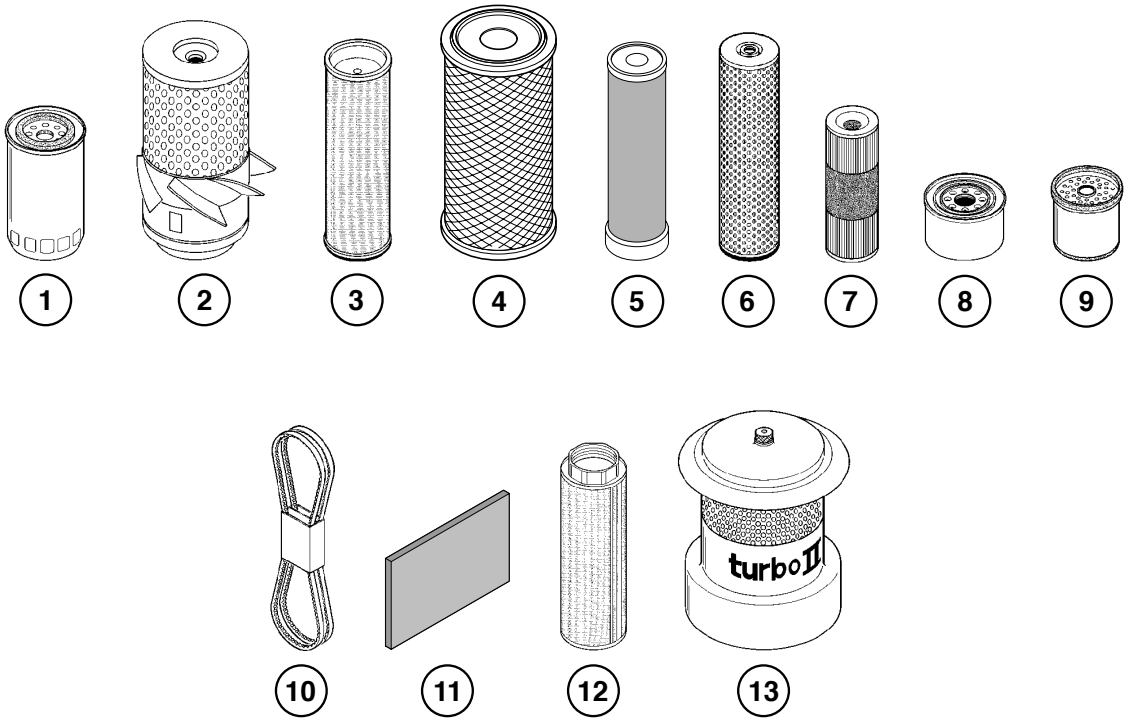

DESIGNATION	PART NUMBER	CLEAN	CHANGE
1 - Engine oil filter	133 755		400 H
2 - Dry air filter cartridge (*)	177 130	50 H	400 H
3 - Safety dry air filter cartridge (*)	177 179		800 H
4 - Dry air filter cartridge (**)	563 416	50 H	400 H
5 - Safety dry air filter cartridge (**)	563 415		800 H
6 - Hydrostatic transmission oil filter cartridge	46 028		800 H
7 - Hydraulic return oil filter cartridge	221 174		400H
8 - Oil tank breather	457 509		400 H
9 - Fuel filter cartridge	49 660		400 H
10 - Fan belt (*)	476 010		
10 - Fan belt (**)	601 464		
11 - Heating suction filter	197 926	800 H	
12 - Suction strainer for hydraulic oil tank (***)	77 402	800 H	
13 - Automatic vacuum-cleaning pre-filter (OPTION)	160 946		

(*) Up to machine n° 142 126
(**) From machine n° 142 127
(***) From machine n° 115 593

Downloaded from www.Manualslib.com manuals search engine

LUBRICANTS AND FUEL

ORGANS TO BE LUBRICATED	CAPACITY	RECOMMENDATION	PACKAGING	REFERENCE
I.C. ENGINE	7,6 L.	Oil MANITOU5 L. Enginer PLUS SAE 15W / 40	581 847 25 L. 55 L. 209 L.	 581 842 581 843 581 844
TRANSFER BOX	0,7 L.	Oil MANITOU Special immersed brakes	25 L.	545 608
FRONT AXLE DIFFERENTIAL	7 L.	Oil MANITOU Special immersed brakes	25 L.	545 608
FRONT WHEEL REDUCER	0,7 L.	Oil MANITOU Special immersed brakes	25 L.	545 608
HYDRAULIC OIL TANK	155 L.	Oil MANITOU Hydraulic ISO 46	25 L. 55 L. 209 L.	161 588 546 108 546 109
BRAKING CIRCUIT		Oil MANITOU Brake mineral fluid	1 L.	490 408
MAST LIFTING CHAINS		Engine oil		
MAST GREASING		Grease MANITOU Multigrease NLGI 2	1 Kg.	161590
GREASING MAST GUIDE ROLLER		Grease MANITOU Multigrease NLGI 2	1 Kg.	161590
GENERAL GREASING		Grease MANITOU Multigrease HD NLGI 2	1 Kg. 5 Kg.	554 973 554 974
COOLING CIRCUIT	15 L.	Cooling liquid (Protection - 30 °C) Cooling liquid (Protection - 25 °C)	2 L. 5 L. 20 L. 210 L. 2 L. 5 L. 20 L. 210 L.	473 076 470 077 470 078 470 079 554 002 554 003 554 004 554 005
FUEL TANK	90 L.	Gazole		

(*) FUEL SPECIFICATION

CETANE RATING : 45 minimum
VISCOSITY : 2 - 4,5 Centistokes at 40° C
DENSITY : 0,820 - 0,860 kg/litre
SULPHUR : 0,2 % mass maximum
DISTILLATION : 85 % at 350° C

- **The cetane rating** is a measure of the ignition quality of a diesel fuel. A fuel with a low **cetane index** may cause problems with cold starts and affect combustion.
- **Viscosity** is the resistance to flow. If the **viscosity** is outside the limits, engine performance may be affected.
- A low **density** reduces the power of the engine, a high **density** increases the power of the engine and the exhaust fumes.
- A high **sulphur** content (Not usually found in europe, north america or australasia) may cause wear to the engine. If only fuels with a high **sulphur** content are available, it is necessary to use a highly alkaline greasing oil in the engine or to replace the greasing oil more frequently.
- **Distillation** : this indicates the mixture of different hydrocarbons in the fuel. A high ratio of light hydrocarbons can affect the characteristics of combustion.
- **Fuels for low temperatures** : special winter fuels may be available for use in the engine at temperatures below 0°C. These fuels have a lower viscosity and thus reduce the formation of paraffin in the fuel at low temperatures. The formation of paraffin can prevent filtration of the fuel.

Downloaded from www.Manualslib.com manuals search engine

https://truckmanualshub.com/
Torkonjestraat 23
8510 Marke
Belgium
056 / 222 111
info@dumarent.be
www.dumarent.be

DIAGNOSTIC ANALYSIS OF OIL

In the event of a maintenance or service contract with the dealer you may be requested to provide a sample of a selected component's oil, for diagnostic analysis.

Downloaded from www.Manualslib.com manuals search engine

SERVICING SCHEDULE

AFTER THE FIRST 50 WORKING HOURS SERVICE

D1	- Drain and change the engine oil.	3 - 20
D2	- Change the engine oil filter.	3 - 20
D4	- Change the fuel filter cartridge.	3 - 21
D5	- Change the hydraulic return oil filter cartridge.	3 - 22
D6	- Change the oil tank breather.	3 - 22
E3	- Change the hydrostatic transmission oil filter cartridge.	3 - 24
E4	- Drain and change the transfer box oil.	3 - 25
E5	- Drain and change the oil of the front axle differential.	3 - 26
E6	- Drain and change the oil of the front wheel reducers.	3 - 26

A - EVERY DAY OR EVERY 10 WORKING HOURS SERVICE

A1	- Check the engine oil level.	3 - 10
A2	- Check the cooling liquid level.	3 - 10
A3	- Check the fuel level.	3 - 11
A4	- Drain the fuel pre-filter.	3 - 11
A5	- Check the tyre pressure and the wheel nut torque.	3 - 11

B - EVERY 50 WORKING HOURS SERVICE

B1	- Clean the dry air filter cartridge. (In heavily dust laden atmosphere, reduce this servicing schedule)	3 - 12
B2	- Check the hydraulic oil level.	3 - 13
B3	- Check the braking oil level.	3 - 13
B4	- Check the level of the windscreen washer liquid.	3 - 14
B5	- Check the battery electrolyte level.	3 - 14
B6	- Clean the radiator core.	3 - 14
B7	- Check and adjust the tension and alignment of the mast lifting chains.	3 - 15
B8	- Lubricate the mast guide rollers.	3 - 15
B9	- Mast greasing.	3 - 16
B10	- General greasing.	3 - 16

C - EVERY 200 WORKING HOURS SERVICE

C1	- Check and adjust the parking brake.	3 - 18
C2	- Check and adjust the tension of the belt Alternator / Fan / Crankshaft.	3 - 18
C3	- Check the level of the transfer box oil.	3 - 18
C4	- Check the level of the front axle differential oil.	3 - 19
C5	- Check the level of the front wheel reducer oil.	3 - 19
C6	- Clean and lubricate the mast uprights. (Before starting up the new lift truck and a last time after 200 workind hours service)	3 - 19
C7	- Drain the fuel filter.	3 - 19

Downloaded from www.Manualslib.com manuals search engine

D - EVERY 400 WORKING HOURS SERVICE

To be carried out once a year if the lift truck has not reached the 400 hours service in the year.

D1	- Drain and change the engine oil.	3 - 20
D2	- Change the engine oil filter.	3 - 20
D3	- Change the dry air filter cartridge.	3 - 21
D4	- Change the fuel filter cartridge.	3 - 21
D5	- Change the hydraulic return oil filter cartridge.	3 - 22
D6	- Change the oil tank breather.	3 - 22
D7	- Check the density of the battery electrolyte.	3 - 22
D8	- Clean the fuel lift pump.	3 - 23
D9	- Check, clean and lubricate the mast lifting chains.	3 - 23
D10	- Grease the parking brake lever mechanism.	3 - 23
D11	- Check the wear of the forks (*).	

(*) : (Consult your dealer)

E - EVERY 800 WORKING HOURS SERVICE

To be carried out once a year if the lift truck has not reached the 800 hours service in the year.

E1	- Drain and change the hydraulic oil.	
E2	- Clean the suction strainer of the hydraulic oil tank.	3 - 24
E3	- Change the hydrostatic transmission oil filter cartridge.	3 - 24
E4	- Drain and change the transfer box oil.	3 - 24
E5	- Drain and change the oil of the front axle differential.	3 - 25
E6	- Drain and change the oil of the front wheel reducers.	3 - 26
E7	- Drain and change the cooling liquid.	3 - 26
E8	- Drain and clean the fuel tank.	3 - 27
E9	- Change the safety dry air filter cartridge.	3 - 28
E10	- Clean the heating suction filter.	3 - 28
E11	- Check the brake circuit pressure (*).	3 - 29
E12	- Bleed the brake circuit (*).	
E13	- Check the brake adjustment (*).	
E14	- Change the braking oil (*).	
E15	- Check the engine silentblocs (*).	
E16	- Check the engine speeds (*).	
E17	- Check the attachment carriage (*).	
E18	- Check the condition of the wheels and tyres (*).	
E19	- Check the speeds of the hydraulic movements (*).	
E20	- Check the condition of the attachments (*).	
E21	- Clean the hydraulic pump tubular filter (*).	

(*) : (Consult your dealer)

F - EVERY 2400 WORKING HOURS SERVICE

F1 - Check the hydraulic circuit pressures and discharge rates (*).
F2 - Check the hydrostatic transmission circuit pressures (*).
F3 - Check and adjust the governing start r.p.m. of the hydrostatic transmission (*).
F4 - Check the chain roller wear (*).
F5 - Check the mast guide rolls (*).
F6 - Check the mast bearing rollers (*).
F7 - Check the mast lifting chains (*).

Downloaded from www.Manualslib.com manuals search engine

F8 - Check the steering system (*).
F9 - Clean the hydraulic oil tank (*).
F10 - Check the oscillation of the rear axle (*).
F11 - Check and adjust the valves clearances (*).
F12 - Check the injectors (*).
F13 - Check and scale the radiator (*).
F14 - Check the water pump and the thermostat (*).
F15 - Check the condition of the mast assembly (*).

(*) : (Consult your dealer)

G - EVERY 4800 WORKING HOURS SERVICE

G1 - Check the wear of the brake disks (*).
G2 - Check the steering axle (*).
G3 - Check the clearance of the front wheel reducers (*).
G4 - Check the bearings clearance of the transfer box (*).
G5 - Check the alternator and the starter motor (*).

(*) : (Consult your dealer)

H - OCCASIONAL MAINTENANCE

H1 - Bleed the fuel system. 3 - 30
H2 - Change a wheel. 3 - 32
H3 - Tow the lift truck. 3 - 33
H4 - Sling the lift truck. 3 - 34
H5 - Transport the lift truck on a flat semitrailer. 3 - 35
H6 - Lift the cabin in case of electric failure. 3 - 36
H7 - Lift the cabin in the event of an hydraulic failure in the lifting system. 3 - 37
H8 - Lift the cabin in the event of a mechanical failure in the lifting system. 3 - 38

Downloaded from www.Manualslib.com manuals search engine

Downloaded from www.Manualslib.com manuals search engine

A - EVERY DAY OR EVERY 10 WORKING HOURS SERVICE

A1 - CHECK THE ENGINE OIL LEVEL

Place the truck on level ground with the engine stopped, and let the oil drain into the sump.

- Lift up the overhead guard or the cabin (See chapter : INSTRUMENTS AND CONTROLS in paragraph : 2 - DESCRIPTION).
- Remove the dipstick 1 (Fig. A1/1).
- Clean the dipstick and check the level between the two MAXI and MINI notches.
- If necessary, add oil (See chapter : LUBRICANTS AND FUEL in paragraph : 3 - MAINTENANCE) by the filler port 2 (Fig. A1/2).

A1/1

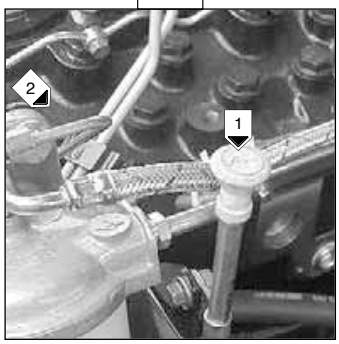

A1/2

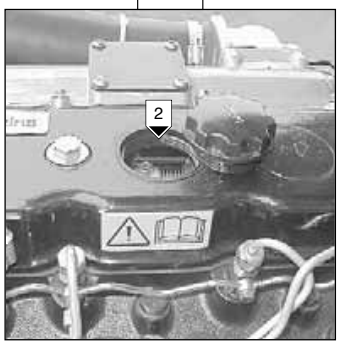

A2 - CHECK THE COOLING LIQUID LEVEL

Place the lift truck on level ground with the I.C. engine stopped, and wait for the engine to cool down.

- Lift up the cabin (See chapter : INSTRUMENTS AND CONTROLS in paragraph : 2 - DESCRIPTION).
- The liquid must be at the MAXIMUM level on the expansion pan 1 (Fig. A2/1).
- If necessary, add cooling liquid through the filler port 2 (Fig. A2/1).

When the expansion pan is empty, check the level in the radiator before filling the expansion pan.

- Slowly bring the radiator cap 3 (Fig. A2/2) up to the safety stop.
- Allow the pressure and the steam to escape.
- Press down and turn the cap so as to release it.
- Add cooling liquid through the filler port 4 (Fig. A2/2).
- Slightly lubricate the filler plug to facilitate the fitting and removal of the radiator cap.

If the cooling liquid is very hot, add only hot cooling liquid (80° C).

A2/1

A2/2

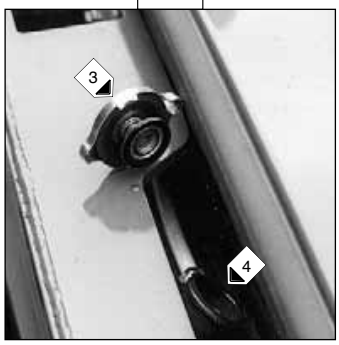

Downloaded from www.Manualslib.com manuals search engine

A3 - CHECK THE FUEL LEVEL

Keep the fuel tank full. To reduce as much as possible any condensation due to the atmospheric conditions.

- Remove cap 1 (Fig. A3).
- Fill the fuel tank with clean fuel, filtered through a strainer or a clean, lint free cloth, through filler port 2 (Fig. A3).
- Put the cap back 1 (Fig. A3).

Never smoke or approach with a flame during filling operations or when the tank is open. Never refill while engine is running.

A3

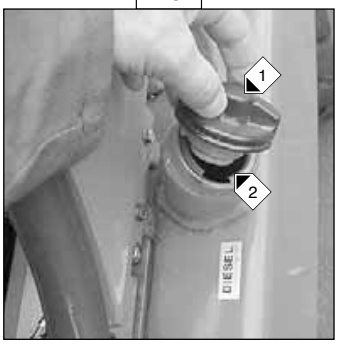

A4 - DRAIN THE FUEL PRE-FILTER

UP TO MACHINE N° 142 126

- Lift up the cabin (See chapter : INSTRUMENTS AND CONTROLS in paragraph : 2 - DESCRIPTION).
- Place a container under drain plug 1 (Fig. A4) and unscrew the plug by two or three thread turns.
- Allow oil to flow void of all impurities and water.
- Tighten the drain plug while the oil flows.

A4

A5 - CHECK THE TYRE PRESSURES AND THE WHEEL NUTS TORQUE

- Check the condition of the tyres, to detect cuts, protuberances, wear, etc.
- Check the torque load of the wheel nuts (See fig. A5). Non compliance with this instruction can cause damage and rupture to the wheel bolts and distortion to the wheels.
- Check and adjust the tyre pressures if necessary (See chapter : CHARACTERISTICS paragraph : 2 - DESCRIPTION).

Check that the air hose is correctly connected to the tyre valve before inflating and keep all persons at a distance during inflation. Respect the recommended tyre pressures given.

A5

WHEEL TORQUE NUTS LOADING	
FRONT WHEEL	400 ± 15 % N.m
REAR WHEEL **Up to machine N° : 116 222**	200 ± 15 % N.m
REAR WHEEL **From machine N° : 116 223**	340 ± 15 % N.m

Downloaded from www.Manualslib.com manuals search engine

B - EVERY 50 WORKING HOURS SERVICE

B1 - CLEAN THE DRY AIR FILTER CARTRIDGE

In case of use in heavily dust laden atmosphere, reducing this periodicity and see chapter : FILTERS CARTRIDGES AND BELTS in paragraph : 3 - MAINTENANCE.

- Lift up the cabin (See chapter : INSTRUMENTS AND CONTROLS in paragraph : 2 - DESCRIPTION).

UP TO MACHINE N° 142 126

- Unscrew nut 1 (Fig. B1/1), and remove cover 2 (Fig. B1/1).
- Unscrew nut 3 (Fig. B1/1), and lift out filter cartridge 4 (Fig. B1/1).
- Leave the safety cartridge in place.
- Clean the filter cartridge using a low pressure air jet directed from the inside to the outside surface of the cartridge only.

B1/1

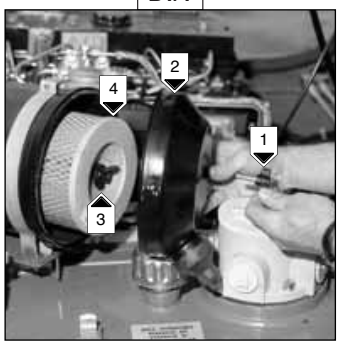

Respect the safety distance of 30 mm between the air jet and the cartridge to avoid tearing or making a hole in the cartridge. The cartridge must not be blown anywhere near the air filter box. Never clean cartridge by tapping it against a hard surface.

- Clean the inside of the casing with a clean, damp lint-free cloth.
- Check the condition of the filter cartridge, replace the cartridge if necessary.
- Refit the cartridge and the cover.

Do not clean the dry air filter cartridge by washing it in liquid. Do not clean by any means the safety cartridge located inside the filter cartridge, change it for a new one if it is dirty or damaged.

FROM MACHINE N° 142 127

- Loosen the nuts and remove cover 1 (Fig. B1/2).
- Release filter cartridge 2 (Fig. B1/2).
- Leave the safety cartridge in place.
- Clean the filter cartridge using a low pressure air jet (Maxi pressure 3 bar) directed from the inside to the outside surface of the cartridge only at least 30 mm from the cartridge wall.
- Cleaning is completed when there is no more dust on the cartridge.

B1/2

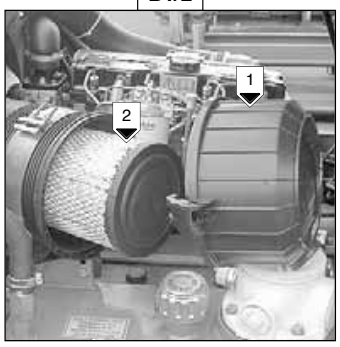

Respect the safety distance of 30 mm between the air jet and the cartridge to avoid tearing or making a hole in the cartridge. The cartridge must not be blown anywhere near the air filter box. Never clean cartridge by tapping it against a hard surface.

- Clean the inside of the casing with a clean, damp lint-free cloth. Also clean the cartridge seal surfaces on the filter and cover.
- Check the condition of the filter cartridge, replace the cartridge if necessary.
- Replace the cartridge making sure it is in the correct position.
- Replace the cover, guiding the valve downwards.

Do not clean the dry air filter cartridge by washing it in liquid. Do not clean by any means the safety cartridge located inside the filter cartridge, change it for a new one if it is dirty or damaged.

Downloaded from www.Manualslib.com manuals search engine

B2 - CHECK THE HYDRAULIC OIL LEVEL

Place the lift truck on level ground with the I.C. engine stopped and the mast lowered as far as possible.

- Lift up the cabin (See chapter : INSTRUMENTS AND CONTROLS in paragraph : 2 - DESCRIPTION).
- Refer to gauge 1 (Fig. B2).
- The level is correct when it is equidistant between the lower and the upper marks.
- If necessary, add oil (See chapter : LUBRICANTS AND FUEL in paragraph : 3 - MAINTENANCE) by the filler port 2 (Fig. B2).

Use a clean funnel and clean the underside of the oil drum before filling.

Always maintain the oil level at maximum as cooling depends on the oil flowing through the tank.

B2

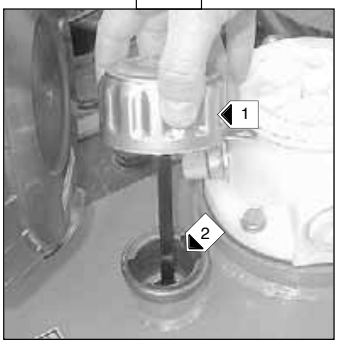

B3 - CHECK THE BRAKING OIL LEVEL

Place the lift truck on level ground.

- Disassemble the access panel 1 (Fig. B3/1).
- The level is correct when it is at the maximum level on the tank.2 (Fig. B3/2).
- If necessary, add oil (See chapter : LUBRICANTS AND FUEL in paragraph : 3 - MAINTENANCE) by the filler port.
- Reassemble the access panel 1 (Fig. B3/1).

If the braking oil level is abnormally low, consult your dealer.

B3/1

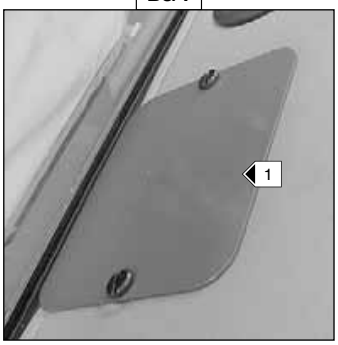

B3/2

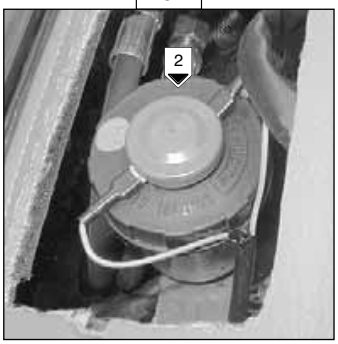

Downloaded from www.Manualslib.com manuals search engine

B4 - CHECK THE LEVEL OF THE WINDSCREEN WASHER LIQUID

B4

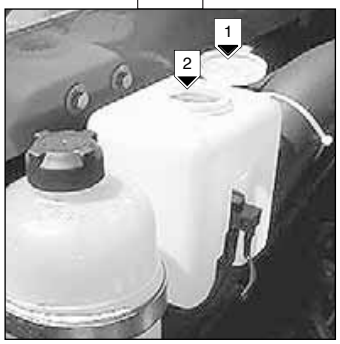

- Lift up the cabin (See chapter : INSTRUMENTS AND CONTROLS in paragraph : 2 - DESCRIPTION).
- Open filling cap 1 (Fig. B4).
- Check visually the level.
- If necessary add windscreen washer liquid by filler port 2 (Fig. B4).

B5 - CHECK THE BATTERY ELECTROLYTE LEVEL

B5

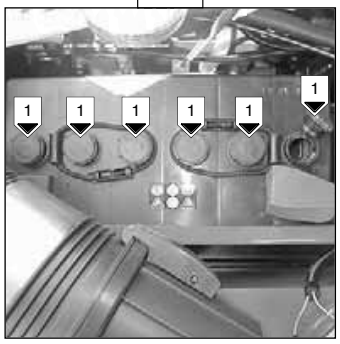

Check the electrolyte level in each cell of the battery. If the truck is working in a high temperature environment, check the level more frequently than every 50 working hours service.

- Lift up the overhead guard or the cabin (See chapter : INSTRUMENTS AND CONTROLS in paragraph : 2 - DESCRIPTION).
- Remove caps 1 (Fig. B5) from each cell of the battery.
- The level is correct when it is 1 cm above the top of the plates in the battery.
- If necessary, top up the cells with clean distilled water that has been stored in a glass container.
- Clean and dry caps 1 (Fig. B5) and refit in place.
- Check the terminal connections and lightly smear them with petroleum jelly to prevent the formation of verdigris.

Handling and servicing a battery can be dangerous, take the following precautions :

- *Wear protective goggles.*
- *Keep the battery horizontal.*
- *Never smoke or work near a naked flame.*
- *Work in a well-ventilated area.*
- *In the event of electrolyte being spilled onto the skin or splashed in the eyes, rinse thoroughly with cold water for 15 minutes and call a doctor.*

B6 - CLEAN THE RADIATOR CORE

- Lift up the cabin (See chapter : INSTRUMENTS AND CONTROLS in paragraph : 2 - DESCRIPTION).

So as to avoid the clogging of the radiator core, clean it by means of a compressed air jet directed from the front to the back (Fig. B6). This is the only way to efficiently remove impurities.

When handling straw, grains or cereals, clean the radiator core every day.

Downloaded from www.Manualslib.com manuals search engine

B7 - CHECK AND ADJUST THE TENSION AND ALIGNMENT OF THE MAST LIFTING CHAINS

B7

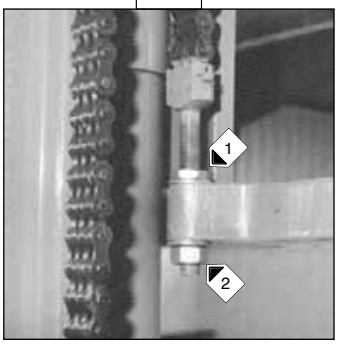

Place the lift truck on level ground with the mast in a vertical position and the forks lifted at approximately 200 mm.

- Check the alignment of the mast lifting chains between the carriage's chain fasteners and the chain rollers.
- Manually verify the chain tension, if necessary adjust as following while ensuring that the carriage is perpendicular to the mast.
- Untighten the lock nut 1 (Fig. B7) of the chain tension adjuster.
- Adjust the tension by tightening or untightening the nut 2 (Fig. B7) while checking the alignment of the lifting chains.
- Then block the lock nut 1 (Fig. B7) and the nut 2 (Fig. B7).

These checks are important for the good working operation of the mast.

In case of technical faults, consult your dealer.

B8 - LUBRICATE THE MAST GUIDE ROLLERS

B8/1

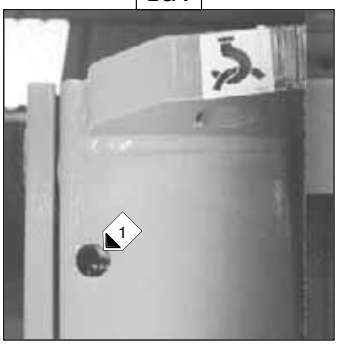

Place the lift truck on level ground with the mast in vertical position and the forks unused.

Clean, then lubricate the following points with grease (See chapter : LUBRICANTS AND FUEL in paragraph : 3 - MAINTENANCE) and remove excess grease.

- Lubricators of upper guide rollers on mast 1 (Fig. B8/1) (2 lubricators).
- Lubricators of lower guide rollers on mast 2 (Fig. B8/2) (2 lubricators).

NOTE : With wide tyres OPTION, lift the forks by approximately 2 m so as to grease the lower guide rollers of the mast through the port 3 (Fig. B8/3).

In case of technical faults, consult your dealer.

B8/2

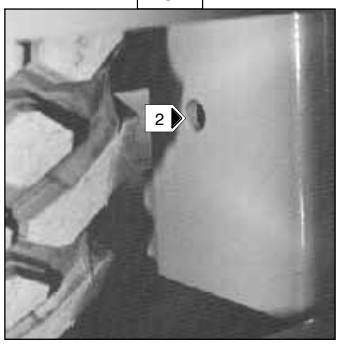

B8/3

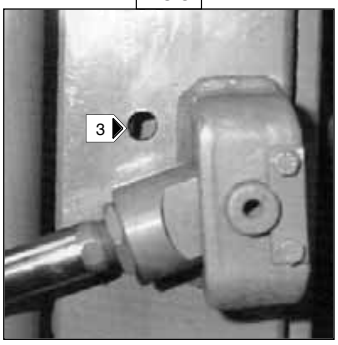

Downloaded from www.Manualslib.com manuals search engine

B9 - MAST GREASING

Clean and lubricate the following points with grease (See chapter : LUBRICANTS AND FUEL in paragraph : 3 - MAINTENANCE) and remove the surplus of grease.

1 - Lubricators of the articulation axles at the foot of the mast 1 (Fig. B9/1) (2 lubricators).

2 - Lubricators of the foot axles 2 (Fig. B9/2) AND the head axles 3 (Fig. B9/3) of the tilt cylinders (4 lubricators).

B9/1

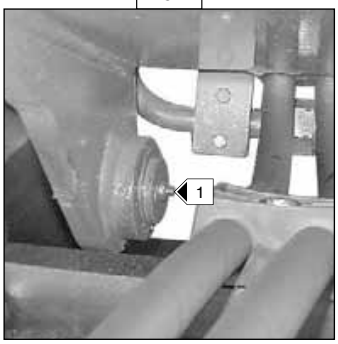

B9/2

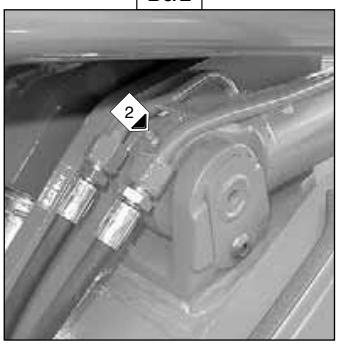

B9/3

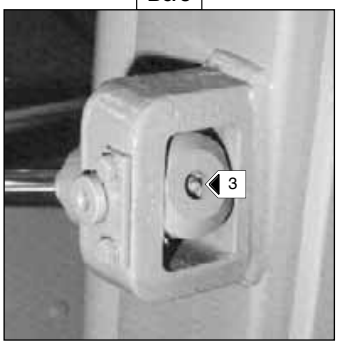

B10 - GENERAL GREASING

Clean and lubricate the following points with grease (See chapter : LUBRICANTS AND FUEL in paragraph : 3 - MAINTENANCE) and remove the surplus of grease.

1 - Lubricators of cabin door 1 (Fig. B10/1) (4 lubricators).

Up to machine N° : 116 222

2 - Lubricators of the steering cylinder foot axles 2 (Fig. B10/2) AND the head axle 3 (Fig. B10/3) (2 lubricator).

3 - Lubricator of steering rod pin 4 (fig. B10/4) (1 lubricator).

4 - Lubricators of cross rods knee-joints 5 (fig. B10/5) and (fig. B10/6) (4 lubricator).

5 - Lubricators of the swivel pins 6 (Fig. B10/7) (6 lubricators).

6 - Lubricators of the oscillation axle of the hind carriage 7 (Fig. B10/8) (2 lubricators).

B10/1

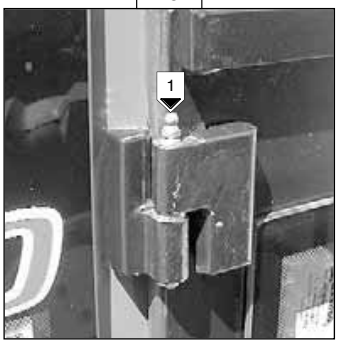

B10/2

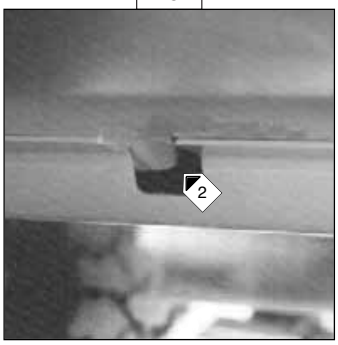

Downloaded from www.Manualslib.com manuals search engine

B10/3

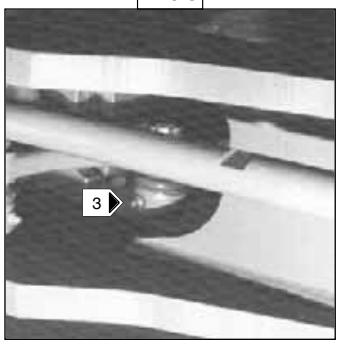

B10/4

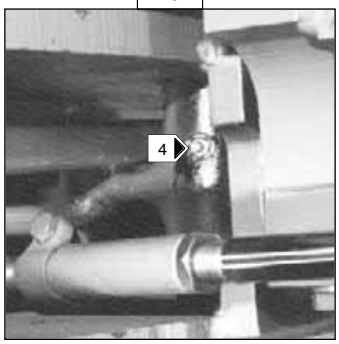

B10/5

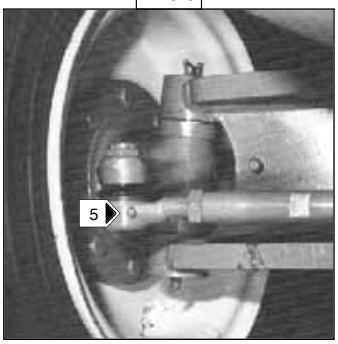

B10/6

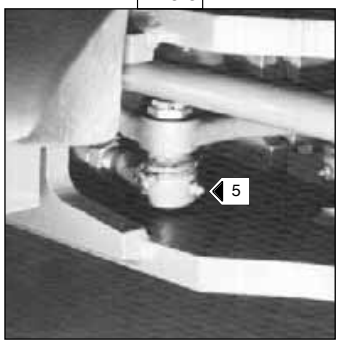

B10/7

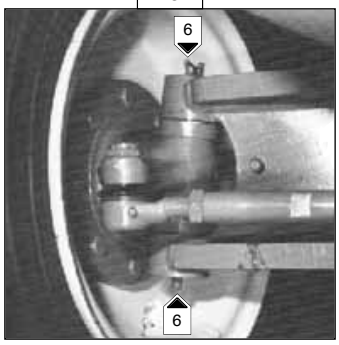

B10/8

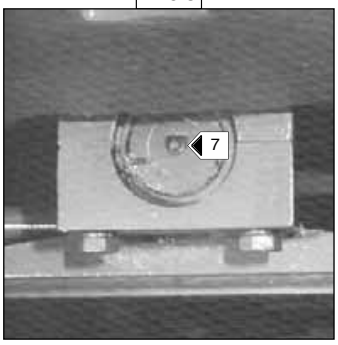

From machine N° : 116 223

7 - Lubricators of the head axles 8 (Fig. B10/9) of the steering cylinder (2 lubricators).

8 - Lubricators of steering rod pins 9 (fig. B10/9) (2 lubricator).

9 - Lubricators of the swivel pins 10 (Fig. B10/9) (6 lubricators).

10 - Lubricators of the oscillation axle of the hind carriage 11 (Fig. B10/10) (2 lubricators).

B10/9

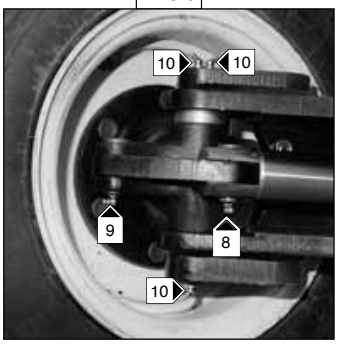

B10/10

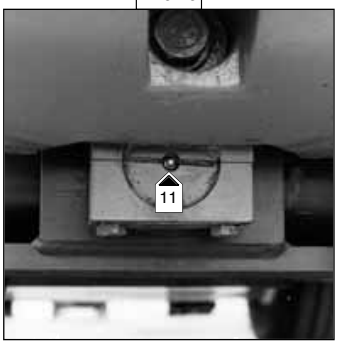

Downloaded from www.Manualslib.com manuals search engine

C - EVERY 200 WORKING HOURS SERVICE

C1 - CHECK AND ADJUST THE PARKING BRAKE

C1

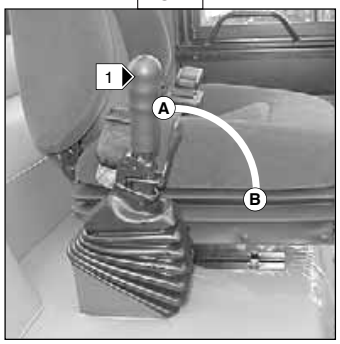

Place the lift truck on level ground.

- Untighten the parking brake in position B (Fig. C1).
- Remove rubber handle 1 (Fig. C1).
- Check the tightening adjustment by locking the parking brake in position A (Fig. C1).
- The adjustment is correct when the lift truck is held stationary with the nominal load, on a slope with a gradient of at least 15 %.
- Repeat the operation until the correct braking adjustment is obtained.

C2 - CHECK AND ADJUST THE TENSION OF THE BELT ALTERNATOR / FAN / CRANKSHAFT

C2

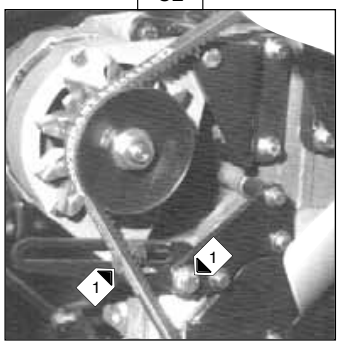

- Lift up the overhead guard or the cabin (See chapter : INSTRUMENTS AND CONTROLS in paragraph : 2 - DESCRIPTION).
- Check the belt for wear and cracks and change it if necessary.
- Check the tension of the belt between the fan and alternator pulleys.
- Under a normal pressure exerted with the thumb, the tension should be approximately 10 mm.
- Carry out adjustments if necessary.
- Untighten screws 1 (Fig. C2) by two to three thread turns.
- Swivel the alternator assembly so as to obtain the belt tension required.
- Retighten screws 1 (Fig. C2).

If the alternator belt has to be changed, check the tension again after the first 20 hours of operation.

C3 - CHECK THE LEVEL OF THE TRANSFER BOX OIL

C3

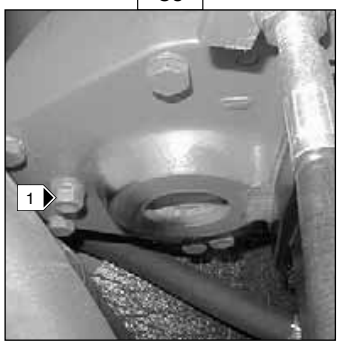

Place the lift truck on level ground with the engine stopped.

- Lift up the cabin (See chapter : INSTRUMENTS AND CONTROLS in paragraph : 2 - DESCRIPTION).
- Remove level plug 1 (Fig. C3). The oil should be flush with the edge of the filler port.
- If necessary, add oil (See chapter : LUBRICANTS AND FUEL in paragraph : 3 - MAINTENANCE) by the same hole.
- Replace and tighten the level plug 1 (Fig. C3) (Tightening torque 29 to 34 N.m).

Downloaded from www.Manualslib.com manuals search engine

C4 - CHECK THE LEVEL OF THE FRONT AXLE DIFFERENTIAL OIL

C4

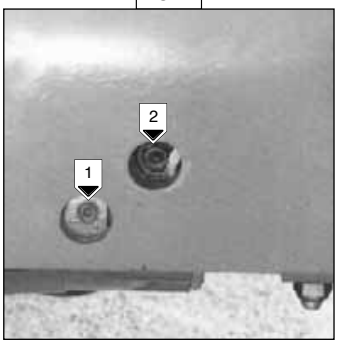

Place the lift truck on level ground with the engine stopped.

- Remove level plug 1 (Fig. C4). The oil should be flush with the edge of the hole.
- If necessary, add oil (See chapter : LUBRICANTS AND FUEL in paragraph : 3 - MAINTENANCE) by the filler port 2 (Fig. C4).
- Replace and tighten the level plug 1 (Fig. C4) (Tightening torque 34 to 49 N.m).

C5 - CHECK THE LEVEL OF THE FRONT WHEEL REDUCER OIL

C5

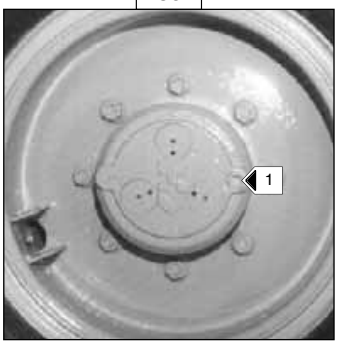

Place the lift truck on level ground with the engine stopped.

- Check the level on each front wheel reducer.
- Place level plug 1 (Fig. C5) in the horizontal position.
- Remove the level plug ; the oil should be flush with the edge of the hole.
- If necessary, add oil (See chapter : LUBRICANTS AND FUEL in paragraph : 3 - MAINTENANCE) by the same hole.
- Replace and tighten the level plug 1 (Fig. C5) (Tightening torque 34 to 49 N.m).

C6 - CLEAN AND LUBRICATE THE MAST UPRIGHTS

C6

OPERATION TO BE DONE BEFORE OPERATING A NEW LIFT TRUCK AND ONCE AT 200 HOURS SERVICE.

- Clean and remove the grease on all the lenght of the mast uprights (See fig. C6) Be very careful when the lift truck is used in very dusty atmosphere.
- Check carefully the differents rollers to discover any traces of wear and change it if necessary.
- Lubricate very slightly with grease (See chapter : LUBRICANTS AND FUEL in paragraph : 3 - MAINTENANCE) all the lenght of mast uprights.

In case of technical faults, consult your dealer.

C7 - DRAIN THE FUEL FILTER

C7

- Open the engine bonnet.
- Visually check for the presence of water in tank 1 (Fig. C7) and drain if necessary.
- Place a receptacle under the tank and loosen drain plug 2 (Fig. C7) by two of three turns.
- Leave the diesel fuel to flow out until it is free from impurities and water.
- Tighten the drain plug while the diesel fuel is running out.

Downloaded from www.Manualslib.com manuals search engine

D - EVERY 400 WORKING HOURS SERVICE

D1 - DRAIN AND CHANGE THE ENGINE OIL

D2 - CHANGE THE ENGINE OIL FILTER

Place the truck on level ground, let the engine run at idle for a few minutes, then stop the engine.

DRAINING THE OIL

- Lift up the cabin (See chapter : INSTRUMENTS AND CONTROLS in paragraph : 2 - DESCRIPTION).
- Remove the cover plate 1 (Fig. D1/1) (According to model).
- Place a container under drain plug 2 (Fig. D1/2) and unscrew the plug.
- Remove filler cap 3 (Fig. D1/3) in order to ensure that the oil is drained properly.

Get rid of the drain oil in an ecological manner.

REPLACEMENT OF THE FILTER

- Remove engine oil filter 4 (Fig. D1/2) ; discard the filter and the filter seal.
- Clean the filter bracket with a clean, lint-free cloth.
- Lightly lubricate the new seal.
- Refit the oil filter on the filter bracket.

Tighten the oil filter by hand pressure only and lock the filter in place by a quarter turn.

FILLING UP THE OIL

- Refit and tighten drain plug 2 (Fig. D1/2) (Tightening torque 30 to 40 N/m).
- Fill up with oil (See chapter : LUBRICANTS AND FUEL in paragraph : 3 - MAINTENANCE) by filler port 5 (Fig. D1/3).
- Wait a few minutes to allow the oil to flow into the sump.
- Start the engine and let it run for a few minutes.
- Check for possible leaks at the drain plug and the oil filter.
- Stop the engine, wait a few minutes and check the level between the two notches on dipstick 6 (Fig. D1/4).
- Top up the level if necessary.
- Remonter la trappe de fermeture 1 (Fig. D1/1) (Suivant montage).
- Put back the cover plate 1 (Fig. D1/1) (According to model).

D1/1

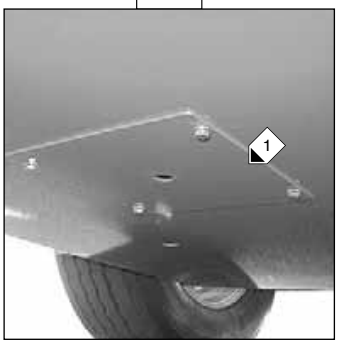

D1/2

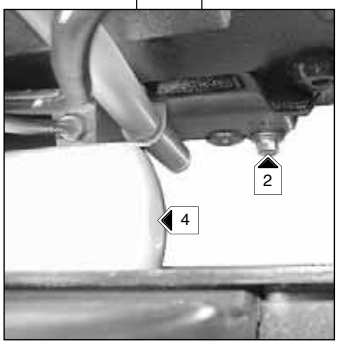

D1/3

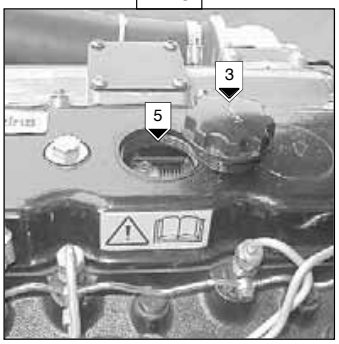

D1/4

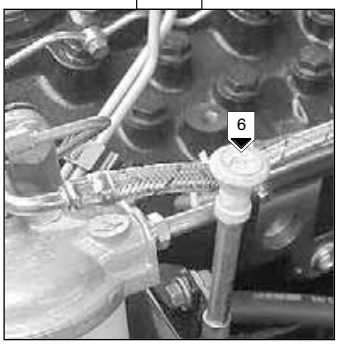

Downloaded from www.Manualslib.com manuals search engine

D3 - CHANGE THE DRY AIR FILTER CARTRIDGE

The air used to burn the fuel is purified by a dry air filter. It is therefore very important that the lift truck should never be used with the cartridge removed or damaged.

- Lift up the cabin (See chapter : INSTRUMENTS AND CONTROLS in paragraph : 2 - DESCRIPTION).

UP TO MACHINE N° 142 126
- Unscrew nut 1 (Fig. D3/1) and remove cover 2 (Fig. D3/1).
- Unscrew nut 3 (Fig. D3/1) lift out and discard filter cartridge 4 (Fig. D3/1).
- Leave the safety cartridge in place.
- Clean the inside of the casing with a clean, damp lint free cloth.
- Refit the new cartridge and the cover.

In the event of the lift truck being used in a heavily dust laden atmosphere, see chapter : FILTERS CARTRIDGES AND BELTS in paragraph : 3 - MAINTENANCE.

D3/1

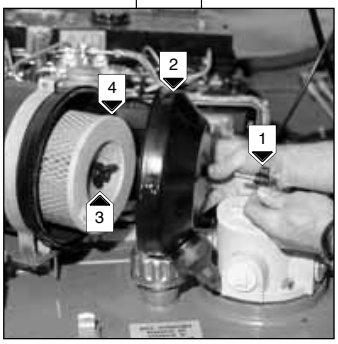

FROM MACHINE N° 142 127
- Loosen the nuts and remove cover 1 (Fig. D3).
- Lift out and discard filter cartridge 2 (Fig. D3).
- Leave the safety cartridge in place.
- Clean the inside of the casing with a clean, damp lint free cloth. Also clean the cartridge seal surfaces on the filter and cover.
- Then fit a new cartridge making sure it is in the correct position.
- Refit the cover, guiding the valve downwards.

In the event of the lift truck being used in a heavily dust laden atmosphere, see chapter : FILTERS CARTRIDGES AND BELTS in paragraph : 3 - MAINTENANCE.

D3/2

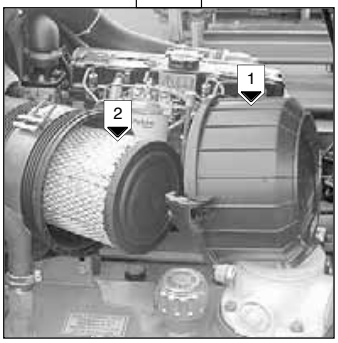

D4 - CHANGE THE FUEL FILTER CARTRIDGE

- Lift up the cabin (See chapter : INSTRUMENTS AND CONTROLS in paragraph : 2 - DESCRIPTION).
- Carefully clean the exterior of the filter and this bracket to prevent the dust from entering the system.
- Unscrew locking screw 1 (Fig. D4).
- Remove tank 2 (Fig. D4) and discard cartridge 3 (Fig. D4) as well as the seals of the cartridge.
- Clean the inside of the filter head and the tank, using a brush immersed in clean diesel oil.
- Refit the assembly with a new cartridge and new seals.

If necessary, bleed the fuel circuit (See chapter : H1 - BLEED THE FUEL SYSTEM in paragraph : 3 - MAINTENANCE).

D4

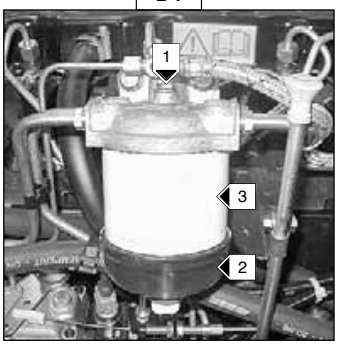

Downloaded from www.Manualslib.com manuals search engine

D5 - CHANGE THE HYDRAULIC RETURN OIL FILTER CARTRIDGE

Thoroughly clean the outside of the filter and its surroundings before any intervention in order to prevent any risk of polluting the hydraulic circuit.

- Lift up the cabin (See chapter : INSTRUMENTS AND CONTROLS in paragraph : 2 - DESCRIPTION).
- Unscrew the locking screws of the cover 1 (Fig. D5).
- Remove the hydraulic return oil filter cartridge 2 (Fig. D5), and fit new replacement cartridge.
- Make sure that the cartridge is correctly positioned and refit cover 1 (Fig. D5).

D5

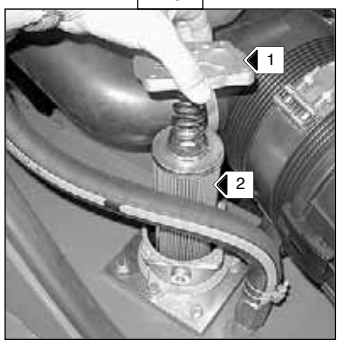

D6 - CHANGE THE OIL TANK BREATHER

- Lift up the cabin (See chapter : INSTRUMENTS AND CONTROLS in paragraph : 2 - DESCRIPTION).
- Unscrew the oil tank air breather 1 (fig. D6) and fit new replacement air breather tighten by hand pressure only.

D6

Up to machine n° : 104 256

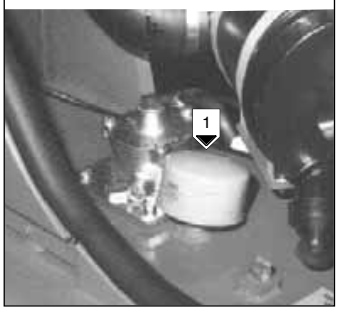

D6

From machine n° : 104 257

D7 - CHECK THE DENSITY OF THE BATTERY ELECTROLYTE

The electrolyte density varies depending on the temperature concerned, but a minimum of 1260 at 16° C must be maintained.
In the shaded area (Fig. D7), the battery is in a normal charge condition. Readings above this zone indicate that the battery needs to be recharged.
The density should not vary more than 0.025 units between cells.

- Lift up the cabin (See chapter : INSTRUMENTS AND CONTROLS in paragraph : 2 - DESCRIPTION).
- Check the electrolyte density in each battery cell using a hydrometer.

Do not carry out this check immediately after topping up with distilled water. Recharge the battery for at least an hour before checking the battery electrolyte density.

D7

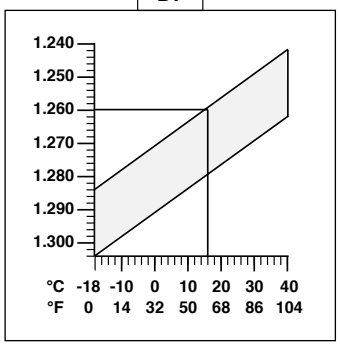

Downloaded from www.Manualslib.com manuals search engine

Handling and servicing a battery can be dangerous, take the following precautions :

- *Wear protective goggles.*
- *Keep the battery horizontal.*
- *Never smoke or work near a naked flame.*
- *Work in a well-ventilated area.*
- *In the event of electrolyte being spilled onto the skin or splashing in the eyes, rinse thoroughly with cold water for 15 minutes and call a doctor.*

D8 - CLEAN THE FUEL LIFT PUMP

D8

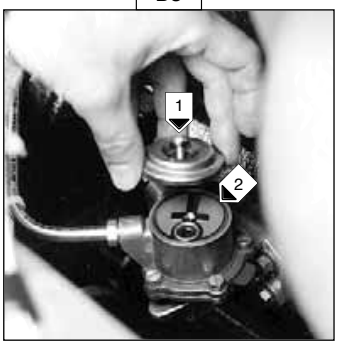

- Lift up the cabin (See chapter : INSTRUMENTS AND CONTROLS in paragraph : 2 - DESCRIPTION).
- Unscrew retaining screw 1 (Fig. D8).
- Remove the strainer 2 (Fig. D8).
- Carefully clean the interior of fuel lift pump, strainer and cover using a brush immersed in clean diesel oil.
- Refit the assembly and make sure that the connection between the cover and the body of pump is perfectly right.
- Re-prime the fuel lift pump.

D9 - CHECK, CLEAN AND LUBRICATE THE MAST LIFTING CHAINS

D9

- Wipe the mast lifting chains 1 (Fig. D9) with a clean, lint-free cloth, then examine them closely so as to detect any signs of wear.
- Vigorously brush the chains to get rid of any foreign matter, with a hard nylon brush and clean diesel fuel.
- Rinse the chains by means of a paint brush impregnated with clean diesel fuel and dry them with a compressed air jet.
- Moderately lubricate the chains with a paint brush impregnated with oil (See chapter : LUBRICANTS AND FUEL in paragraph : 3 - MAINTENANCE).
- Remove the excess of oil with a clean cloth on the full length of the mast lifting chains.

In case of technical faults, consult your dealer.

D10 - GREASE THE PARKING BRAKE LEVER MECHANISM

D10

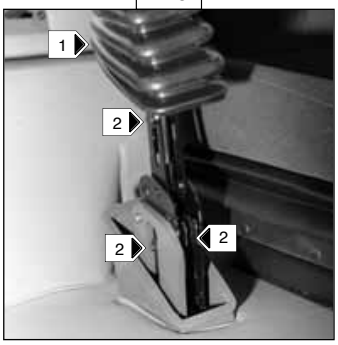

- Release the protective boot 1 (Fig. D10).
- Clean and grease articulation axles 2 (Fig. D10) with grease (See chapter : LUBRICANTS AND FUEL in paragraph : 3 - MAINTENANCE).
- Refit the protective boot 1 (Fig. D10).

Downloaded from www.Manualslib.com manuals search engine

E - EVERY 800 WORKING HOURS SERVICE

E1 - DRAIN AND CHANGE THE HYDRAULIC OIL

E2 - CLEAN THE SUCTION STRAINER OF THE HYDRAULIC OIL TANK

E3 - CHANGE THE HYDROSTATIC TRANSMISSION OIL FILTER CARTRIDGE

Place the lift truck on level ground with the I.C. engine stopped and the mast lowered as far as possible.

DRAINING THE OIL

- Lift up the cabin (See chapter : INSTRUMENTS AND CONTROLS in paragraph : 2 - DESCRIPTION).

Before any type of intervention, the drain plug surroundings should be carefully cleaned.

- Place a container under the drain plug 1 (Fig. E1/1) and unscrew it.
- Unscrew the cover 2 (Fig. E1/2) to ensure that the oil is drained properly.

Dispose the drain oil in an ecological manner.

STRAINER CLEANING
FROM MACHINE N° : 115 593

- Disconnect the clogging indicator 3 (Fig. E1/3).
- Disconnect the hose 4 (Fig. E1/3) at the level of the hydrostatic transmission oil filter 5 (Fig. E1/3).
- Unscrew the four screws 6 (Fig. E1/3) and remove the complete filter 5 (Fig. E1/3).
- Unscrew the suction strainer at the bottom of the tank, clean it with the help of a compressed air jet, check its condition and change it, if necessary.
- Reassemble the strainer, the filter and re-connect the clogging indicator.

HYDROSTATIC TRANSMISSION OIL FILTER CARTRIDGE CHANGE

- Unscrew the cap 7 (Fig. E1/4).
- Remove the hydrostatic transmission oil filter cartridge 8 (Fig. E1/4) and replace it by a new one.
- Ensure that the cartridge is correctly positioned and refit the cover.

Do not operate the lift truck without a cartridge. This would immediately lead to the deterioration of the hydraulic transmission circuit, the hydrostatic pump and the hydrostatic motor.

FILLING UP OF OIL

- Clean and refit drain plug 1 (Fig. E1/1) (Tightening torque 29 to 39 N.m).
- Fill up with oil (See chapter : LUBRICANTS AND FUEL in paragraph : 3 - MAINTENANCE) by filler port 9 (Fig. E1/2).

E1/1

E1/2

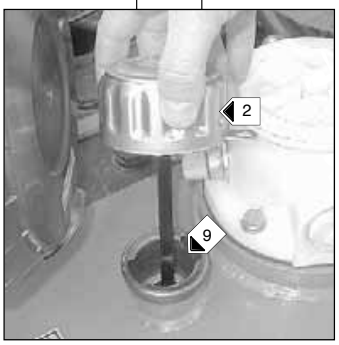

E1/3

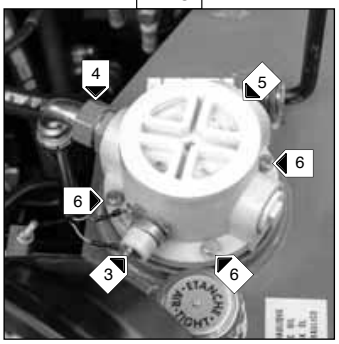

E1/4

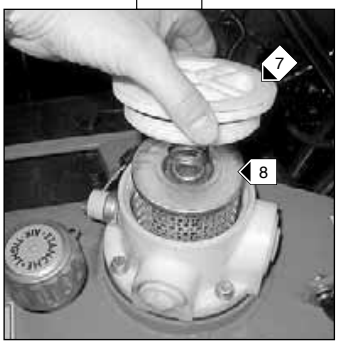

Downloaded from www.Manualslib.com manuals search engine

Use a clean container and funnel and clean the underside of the oil drum before filling.

- Examine the oil level on the cap-gauge 2 (Fig. E1/2), the oil level should be equidistant between the lower and the upper marks.
- Check for any possible leak at the drain plug.
- Refit the cap-gauge 2 (Fig. E1/2).

It may be necessary to bleed the system at the inlet of the pumps, if any air bubbles have formed during the draining; if so, consult your dealer.

POLLUTION ABATEMENT OF THE HYDRAULIC CIRCUIT FROM MACHINE N° : 115 593

- Let the engine run (Accelerator pedal at halfway travel) for 5 minutes without using anything on the lift truck, then for 5 more minutes while using completely the hydraulic movements (Except the steering system and the service brakes).
- Accelerate the engine at full speed for 1 minute, then activate the steering system and the service brakes.

This operation makes a pollution abatement of the circuit possible through the hydraulic return oil filter.

E4 - Drain and change the transfer box oil

E4

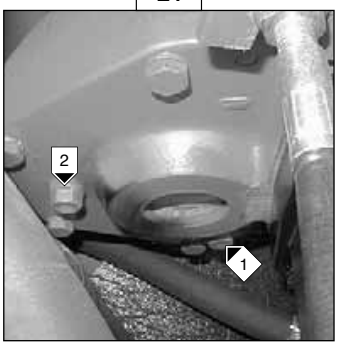

Place the lift truck on level ground with the engine stopped, the transfer box oil still warm.

- Lift up the cabin (See chapter : INSTRUMENTS AND CONTROLS in paragraph : 2 - DESCRIPTION).
- Place a container under drain plug 1 (Fig. E4) and unscrew the plug.
- Remove level and filler cap 2 (Fig. E4) in order to ensure that the oil is drained properly.

Get rid of the drain oil in an ecological manner.

- Refit and tighten drain plug 1 (Fig. E4) (Tightening torque 29 to 39 N.m).
- Fill up with oil (See chapter : LUBRICANTS AND FUEL in paragraph : 3 - MAINTENANCE) by filler port 2 (Fig. E4).
- The level is correct when the oil is flush with the edge of the hole.
- Check for any possible leaks at the drain plug.
- Refit and tighten level and filler cap 2 (Fig. E4) (Tightening torque 29 to 39 N.m).

Downloaded from www.Manualslib.com manuals search engine

E5 - DRAIN AND CHANGE THE FRONT AXLE DIFFERENTIAL OIL

Place the truck on level ground with the engine stopped and the differential oil still warm.

- Place a container under the drain plugs 1 (Fig. E5/1) and unscrew them.
- Remove the filler plug 2 (Fig. E5/1) and the level plug 3 (Fig. E5/1) so as to ensure a good draining.

Dispose the drain oil in an ecological manner.

- Refit and tighten drain plugs 1 (Fig. E5/1) (Tightening torque 34 to 49 N.m).
- Fill up with oil (See chapter : LUBRICANTS AND FUEL in paragraph : 3 - MAINTENANCE) by filler port 2 (Fig. E5/2).
- The level is correct when the oil level is flush with the edge of port 3 (Fig. E5/2).
- Check for any possible leaks at the drain plugs.
- Refit and tighten the filler plug 2 (Fig. E5/2) and the level plug 3 (Fig. E5/2). (Tightening torque 34 to 49 N.m).

E5/1

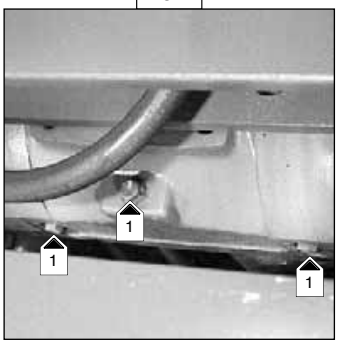

E5/2

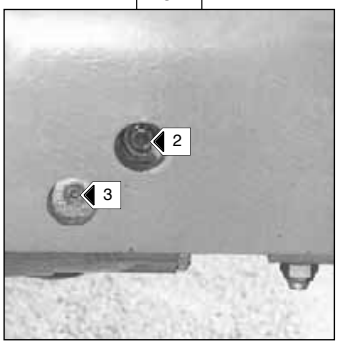

E6 - DRAIN AND CHANGE THE FRONT WHEEL REDUCER OIL

Place the lift truck on level ground with the engine stopped and the reducers oil still warm.
- Drain and change each front wheel reducer.
- Place drain plug 1 (Fig. E6) in position A.
- Place a container under the drain plug and unscrew the plug.
- Let the oil drain fully.

Dispose the drain oil in an ecological manner.

- Place the drain port in position B, (Fig. E6) in a level port.
- Fill up with oil (See chapter : LUBRICANTS AND FUEL in paragraph : 3 - MAINTENANCE) by level port 1 (Fig. E6).
- The level is correct when the oil level is flush with the edge of the hole.
- Refit and tighten the drain plug 1 (Fig. E6) (Tightening torque 34 to 49 N.m).

E6

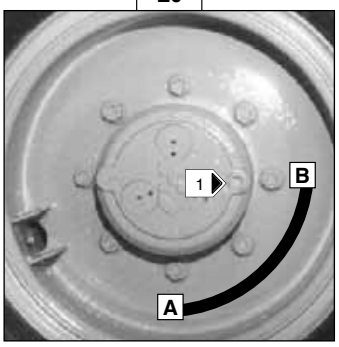

Downloaded from www.Manualslib.com manuals search engine

E7 - DRAIN AND CHANGE THE COOLING LIQUID

These operations are to be carried out if necessary or once a year at the coming of winter.
Place the truck on level ground with the engine stopped and cold.

LIQUID DRAINING

- Lift up the cabin (See chapter : INSTRUMENTS AND CONTROLS in paragraph : 2 - DESCRIPTION).
- Open the tap 1 (fig. A7/1) of the radiator.
- Untighten the drain plug 2 (Fig. E7/2) of the engine block.
- Unscrew the filler plug 3 (Fig. E7/3) of the expansion pan and empty the latter.
- Remove the filler plug 5 (Fig. E7/5) of the radiator.
- Allow the cooling circuit to drain completely while ensuring that the ports do not get clogged.
- Check the condition of the hoses as well as the fastening devices and change the hoses if necessary.
- Rinse the circuit with clean water and use a cleaning product if necessary.

LIQUID FILLING

- Close the tap 1 (fig. A7/1).
- Retighten the drain plug 2 (Fig. E7/2) (Tightening torque 7 to 12 N/m).
- Slowly and completely fill the cooling circuit (See chapter : LUBRICANTS AND FUEL in paragraph : 3 - MAINTENANCE)via the filler port 5 (Fig. E7/4).
- Fill the expansion pan to the maximum level.
- Allow the engine to run at idle for a few minutes.
- Check for possible leaks.
- Check the level and top up if necessary.
- Refit the filler plug 4 (Fig. E7/4).
- Screw the filler plug 3 (Fig. E7/3)

The engine does not contain any corrosion resistor and must be filled during the whole year with a mixture containing 25 % of ethylene glycol-based anti-freeze.

E7/1

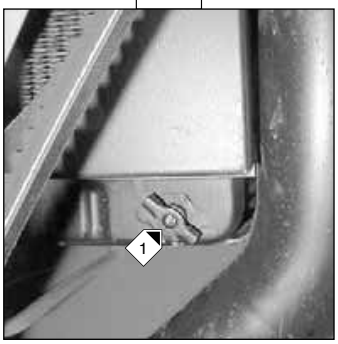

E7/2

E7/3

E7/4

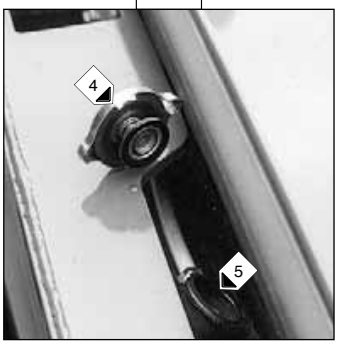

Downloaded from www.Manualslib.com manuals search engine

E8 - DRAIN AND CLEAN THE FUEL TANK

While carrying out these operations, do not smoke or work near a flame.

Place the lift truck on level ground with the engine stopped.

- Lift up the cabin (See chapter : INSTRUMENTS AND CONTROLS in paragraph : 2 - DESCRIPTION).
- Inspect the parts susceptible to leaks in the fuel circuit and in the tank.
- **In the event of a leak, contact your dealer.**

Never try to carry out a weld or any other operation by yourself, this could provoke an explosion or a fire.

- Place a container under drain plug 1 (Fig. E8/1) and unscrew the plug.
- Remove cap 2 (Fig. E8/2).
- Let the fuel flow and clean with 10 litres of clean fuel by filler port 3 (Fig. E8/2).
- Refit and tighten drain plug 1 (Fig. E8/1) (Tightening torque 29 to 39 N.m).
- Fill the fuel tank with clean fuel (See chapter : LUBRICANTS AND FUEL in paragraph : 3 - MAINTENANCE) filtered through a strainer or a clean, lint-free cloth and refit the filler plug 2 (Fig. E8/2).
- Re-prime the system by activating fuel feed pump 4 (Fig. E8/3).
- If necessary, bleed the system (See chapter : H1 - BLEED THE FUEL SYSTEM in paragraph : 3 - MAINTENANCE).

E8/1

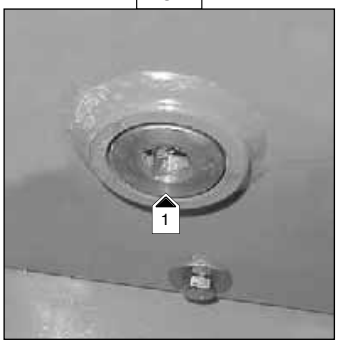

E8/2

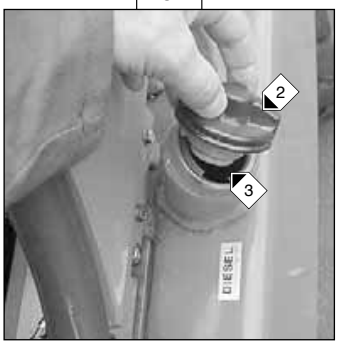

E8/3

E9 - CHANGE THE SAFETY DRY AIR FILTER CARTRIDGE

- Lift up the cabin (See chapter : INSTRUMENTS AND CONTROLS in paragraph : 2 - DESCRIPTION).
- Disassemble the dry air filter cartridge (See chapter : D3 - CHANGE THE DRY AIR FILTER CARTRIDGE in paragraph : 3 - MAINTENANCE).

UP TO MACHINE N° 142 126

- Remove air filter safety cartridge 1 (Fig. E9/1) and replace the safety cartridge concerned with a new cartridge.

E9/1

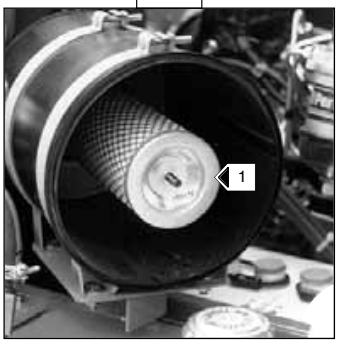

Downloaded from www.Manualslib.com manuals search engine

FROM MACHINE N° 142 127

- Remove air filter safety cartridge 1 (Fig. E9/2) and replace the safety cartridge concerned with a new cartridge.

- Reassemble the entire unit (See chapter : D3 - CHANGE THE DRY AIR FILTER CARTRIDGE in paragraph : 3 - MAINTENANCE).

E9/2

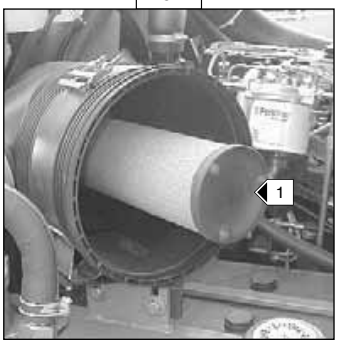

E10 - CLEAN THE HEATING SUCTION FILTER

- Lift up the cabin (See chapter : INSTRUMENTS AND CONTROLS in paragraph : 2 - DESCRIPTION).
- Loosen the knurled nuts 1 (Fig. E10/1) and remove the washers.
- Remove the heating suction filter 2 (Fig. E10/2).
- Clean the filter by means of a compressed air jet.
- Check its condition and change it if necessary.
- Reassemble the whole.

E10/1

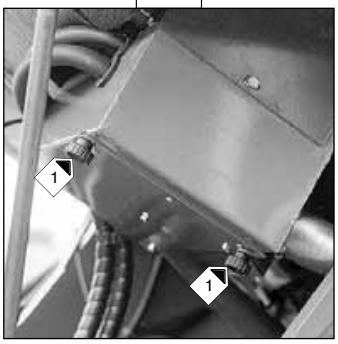

E10/2

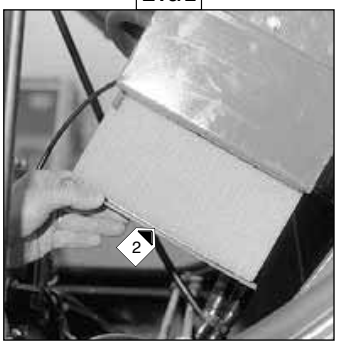

Downloaded from www.Manualslib.com manuals search engine

H - OCCASIONAL MAINTENANCE

H1 - BLEED THE FUEL SYSTEM

These operations are to be carried out only in the following cases :
- A component of the fuel system replaced or drained.
- A drained tank.
- Running out of fuel.

Ensure that the level of fuel in the tank is sufficient, turn the ignition key to notch I to establish electrical contact and bleed in the following order :

- Lift up the cabin (See chapter : INSTRUMENTS AND CONTROLS in paragraph : 2 - DESCRIPTION).

H1/1

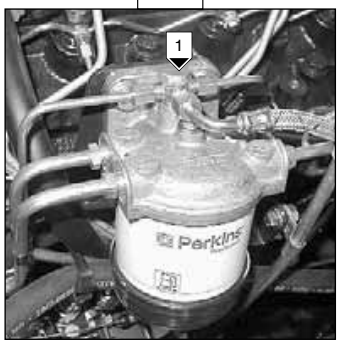

BLEEDING THE FUEL FILTER
- Loosen bleed screw 1 (Fig. H1/1).
- Activate feed pump 2 (Fig. H1/2) until the diesel fuel flows out free from air at the bleed screw.

NOTE : If the lever on the feed pump is in the maximum raised position, turn the crankshaft by one turn.
- Tighten the bleed screw while the diesel fuel is flowing out.

H1/2

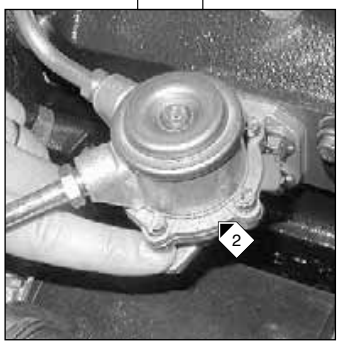

BLEEDING THE HEATER PLUG
- Loosen connection 3 (Fig. H1/3) on the heater plug.
- Activate feed pump 2 (Fig. H1/2) until the diesel fuel is flowing out free from air at the connection.
- Tighten the connection while the diesel fuel is flowing out.

Immobilise the heater plug with a spanner before loosening connection 3 (Fig. H1/3).

H1/3

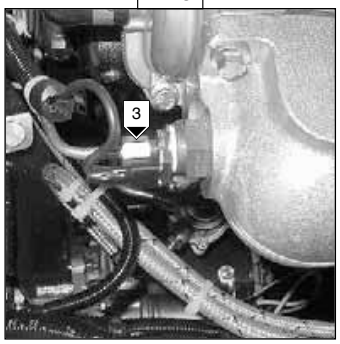

BLEEDING THE INJECTION PUMP
- Loosen connection 4 (Fig. H1/4) of the low pressure fuel return circuit on the regulator housing.
- Activate feed pump 2 (Fig. H1/2) until the diesel fuel is flowing out free from air at the connection.
- Tighten the connection while the diesel fuel is flowing out.

H1/4

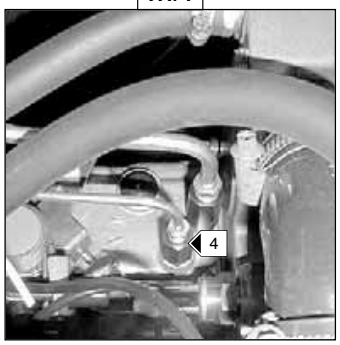

Downloaded from www.Manualslib.com manuals search engine

BLEEDING THE INJECTORS

- Loosen high pressure connectors 5 (Fig. H1/5) of two of the injectors.
- Activate the starter until the diesel fuel flows out free of air at connections 5 (Fig. H1/5).
- Tighten the connection while the diesel fuel is flowing out (Tightening torque 22 N.m).

The engine is then ready to be started up.

Turn the IC engine over slowly for 5 minutes immediately after bleeding the fuel feed circuit, in order to ensure that the injection pump has been bled thoroughly.

NOTE : If the engine functions correctly for a short time then stops or functions irregularly, check for possible leaks in the low pressure circuit. **If in doubt, contact your dealer**.

H1/5

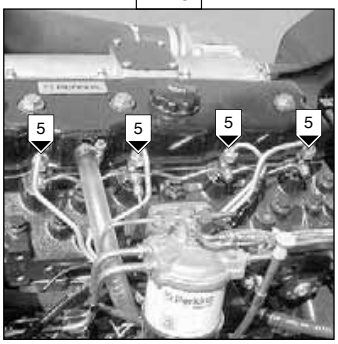

Downloaded from www.Manualslib.com manuals search engine

H2 - CHANGE A WHEEL

In the event of a wheel being changed on the public highway, make sure of the following points :

- Stop the lift truck, if possible on even and hard ground.
- To pass on stop of lift truck (See chapter : DRIVING INSTRUCTIONS in paragraph : 1 - OPERATING AND SAFETY INSTRUCTIONS).
- Put the warning lights on.
- Immobilise the lift truck in both directions on the axle opposite to the wheel to be changed.
- Unlock the nuts of the wheel to be changed.

REAR WHEEL

NOTE : For this operation, we advise you to use the hydraulic jack **MANITOU reference 505 507**.

- Fit the jack under the hind carriage, as near as possible to the wheel to be changed and adjust the jack (Fig. H2/1).
- Lift the wheel until it lifts off the ground and fit security wedges under the hinge carriage (Fig. H2/2).
- Untighten completely the wheel nuts and remove them.
- Free the wheel by reciprocating movements and roll it on the side.
- Slip the new wheel on the wheel hub.
- Screw the nuts by hand, if necessary grease them.

- Remove the safety wedging and lower the lift truck with the jack.
- Tighten the wheel nuts with a torque wrench (See chapter : A - DAILY OR EVERY 10 HOURS SERVICE in paragraph : 3 - MAINTENANCE for tightening torque).

FRONT WHEEL

NOTE : For this operation, we advise you to use the hydraulic jack **MANITOU reference 505 507**.

- Place the jack under the flared tube, as near as possible to the wheel to be changed and adjust the jack (Fig. H2/3).
- Lift the wheel until it lifts off the ground and fit security wedges under the chassis (Fig. H2/4).
- Untighten completely the wheel nuts and remove them.
- Free the wheel by reciprocating movements and roll it on the side.
- Slip the new wheel on the wheel hub.
- Screw the nuts by hand, if necessary grease them.
- Remove the safety wedging and lower the lift truck with the jack.
- Tighten the wheel nuts with a torque wrench (See chapter : A - DAILY OR EVERY 10 HOURS SERVICE in paragraph : 3 - MAINTENANCE for tightening torque).

H2/1

H2/2

H2/3

H2/4

Downloaded from www.Manualslib.com manuals search engine

H3 - TOW THE LIFT TRUCK

To start up the lift truck, never try to push or pull it.
Such a manoeuvre would cause serious damage to the hydrostatic transmission.

UNLOCKING OF HIGH PRESSURE VALVES.

ACCESS TO HIGH PRESSURE VALVES.
- The upper HP valve 1 (Fig.3/1) is accessible after the lifting of the cab.(See chapter : INSTRUMENTS AND CONTROLS in paragraph : 2 - DESCRIPTION).
- The lower HP valve 2 (Fig.3/1) is accessible after removal of the protection housing under the frame.

UNLOCKING OF HIGH PRESSURE VALVES.
- Check the X dimension (Fig.H3/2) on the two HP valves.
- Unlock the counter-nut 3 (Fig.H3/2)
- Tighten the screw 4 (Fig.H3/2) until flusching the counter-nut 3 (Fig.H3/2)
- After towing proceed in reverse order to reposition the HP valves to the X position.

TOWING THE LIFT TRUCK

The towing of the truck must be done to a slow speed (inferior to 5 km/h) and on the shortest distance (inferior to 100 meters).

- Put the forward/ reverser lever in neutral.
- Untighten the hand brake.
- Turn up the warning lights (OPTION).
- The steering and braking booster lacking, act slowly and with strength on the levers. Avoid sudden movements and jerks.

H3/1

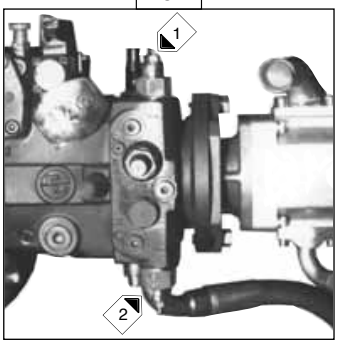

H3/2

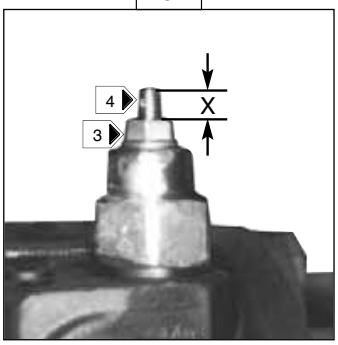

Downloaded from www.Manualslib.com manuals search engine

H4 - SLING THE LIFT TRUCK

- Take into account the position of the lift truck gravity center for lifting (Fig. H4/1).
- Place the hooks in the fastening points provided (Fig. H4/2 and H4/3).

H4/1

A = 1056 mm B = 1019 mm (MSI 40)
A = 1169 mm B = 906 mm (MSI 50)

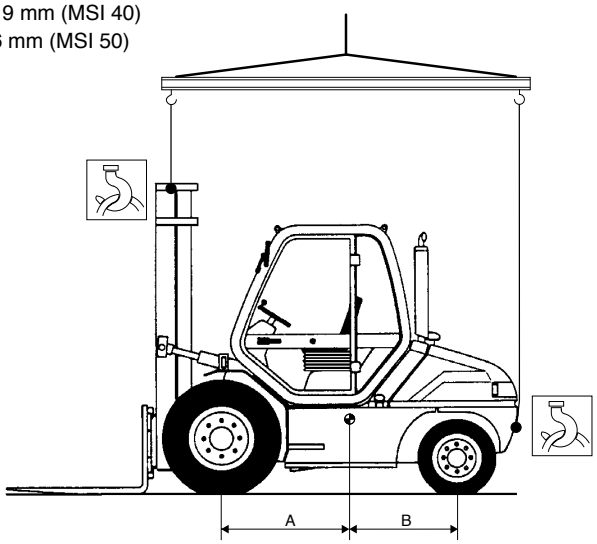

H4/2

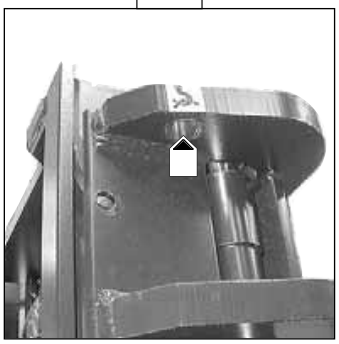

H4/3

Downloaded from www.Manualslib.com manuals search engine

duma rent
https://truckmanualshub.com
Torkonjestraat 23
8510 Marke
Belgium
056 / 222 111
info@dumarent.be
www.dumarent.be

H5 - TRANSPORT THE LIFT TRUCK ON A FLAT SEMITRAILER

Ensure that the safety instructions connected to the platform are respected before the loading of the lift truck and that the driver of the means of transport is informed about the dimensions and the weight of the lift truck (See chapter : CHARACTERISTICS in paragraph : 2 - DESCRIPTION).

Ensure that the platform has got dimensions and a load capacity sufficient for transporting the lift truck. Check also the pressure on the contact surface allowable for the platform in connection with the lift truck.

LOAD THE LIFT TRUCK

- Block the wheels of the semitrailer.
- Fix the loading ramps so that you obtain an angle as little as possible to lift the lift truck.
- Load the lift truck parallel to the semitrailer.
- Stop the lift truck (See chapter : DRIVING INSTRUCTIONS in paragraph : 1 - OPERATING AND SAFETY INSTRUCTIONS).

STOW THE LIFT TRUCK

- Fix the chocks to the semitrailer at the front and at the back of each tyre (Fig. H5/1).
- Fix also the chocks to the semitrailer in the inside of each tyre (Fig. H5/2).
- Stow the lift truck onto the semi-trailer with sufficiently resistant ropes. To the front by passing above the articulation fittings 1 (Fig. H5/3) of the mast and to the back onto the towing pin 2 (Fig. H5/4).
- Tighten the ropes (Fig. H5/5).

H5/1

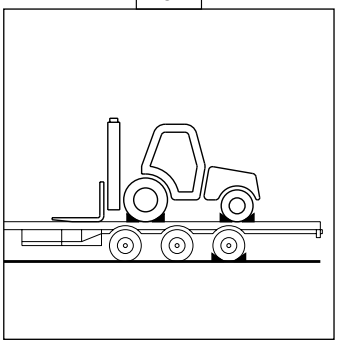

H5/2

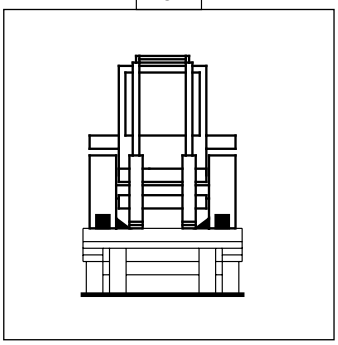

H5/3

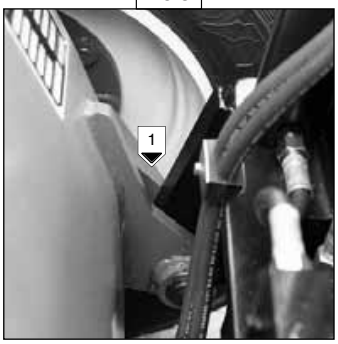

H5/4

H5/5

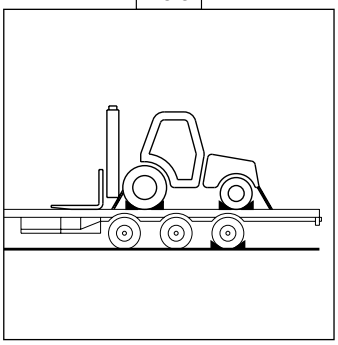

Downloaded from www.Manualslib.com manuals search engine

H6 - LIFT UP THE CABIN IN THE EVENT OF AN ELECTRIC FAILURE

UP TO MACHINE N° : 117 315
ASSEMBLY OPTION

- Bring a floating battery of the same type as the one used for the lift truck and battery cables.
- Open the inspection panel of motor 1 (Fig. H6/1).
- Access to the lift truck battery from the motor inspection panel and connect the floating battery while respecting the polarity.
- Then, carry out the lifting of the cabin (See chapter : INSTRUMENTS AND CONTROLS in paragraph : 2 - DESCRIPTION).

H6/1

FROM MACHINE N° : 117 316

- Bring a floating battery of the same type as the one used for the lift truck and battery cables.
- Close the left door and open the right door of the cabin.
- Unlock the cabin with the lever 1 (Fig. H 6/2) in position A.
- Remove the key from the battery disconnecting device.
- Disassemble the panel 2 (Fig. H 6/3) to access to the connections of the battery disconnecting device.
- Connect the negative cable onto the battery and take a good earth on the lift truck (e.g. locking screw of the front axle on the frame) (Fig. H6/4).
- Connect the positive cable onto the battery and the terminal 3 (Fig. H 6/5) of the battery disconnecting device.
- Turn on the ignition in the lift truck.
- Half-open the right door of the cabin and press the upper part of the switch 4 (Fig. H6/6) to tilt the cabin as far as possible without interfering with the mast.
- Disconnect the positive cable from the terminal 3 (Fig. H6/5) of the battery disconnecting device.
- Disconnect the earth in the lift truck.
- Access to the lift truck battery and connect the floating battery while respecting the polarity (Fig. H 6/7).
- Then, carry out the lifting of the cabin (See chapter : INSTRUMENTS AND CONTROLS in paragraph : 2 - DESCRIPTION).

H6/2

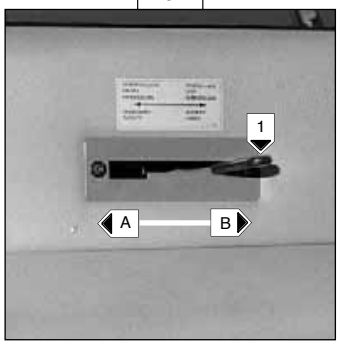

H6/3

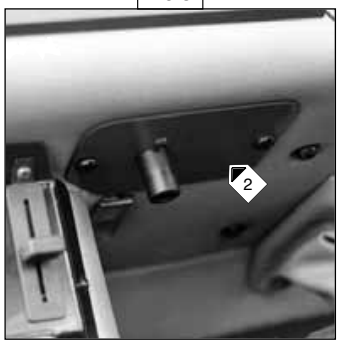

H6/4

H6/5

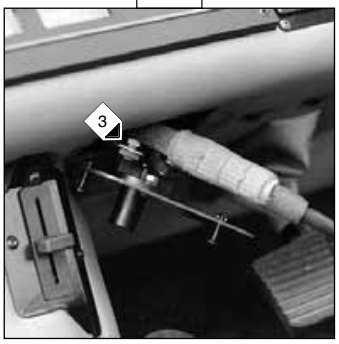

H6/6

Downloaded from www.Manualslib.com manuals search engine

H6/7

H7 - LIFT THE CABIN IN THE EVENT OF A HYDRAULIC FAILURE IN THE LIFTING SYSTEM.

- Unlock the cabin with the lever 1 (Fig. H 7/1) in position A.
- Tilt the mast backwards as far as possible and if necessary lift the mast until it reaches 50 cm above the cabin.
- Close the doors of the cabin.
- Pass a sling around the upper belt of the mobile column (Fig. H 7/2) and fasten the sling ends onto the welded rings 2 (Fig. H 7/3) at the back of the roof.
- Start the I.C. engine.
- Carefully lift the mast so as to stretch the sling.
- Slowly tilt and lift the mast forwards until you can fit the safety stay 3 (Fig. H 7/4) onto its stop 4 (Fig. H 7/4).
- Lower the mast so as to release and remove the sling.
- Reset the lever 1 (Fig. H7/1) into position B.

H7/1

Jusqu'à la machine N° : 117 315

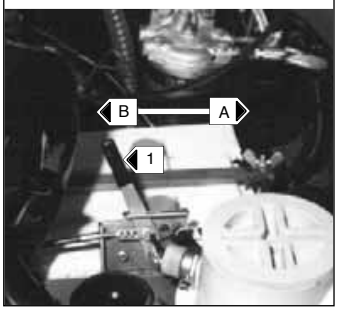

H7/1

A partir de la machine N° : 117 316

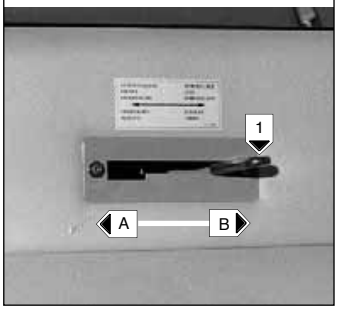

H7/2

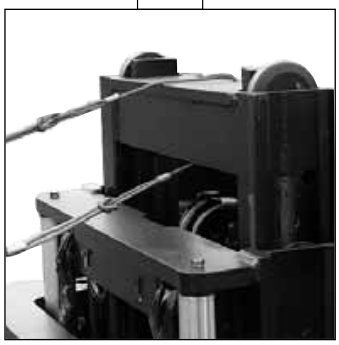

H7/3

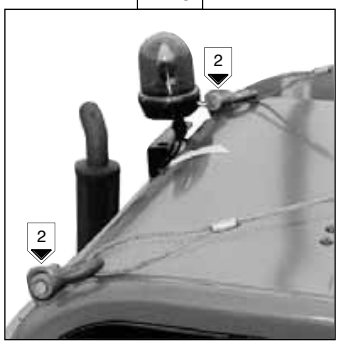

H7/4

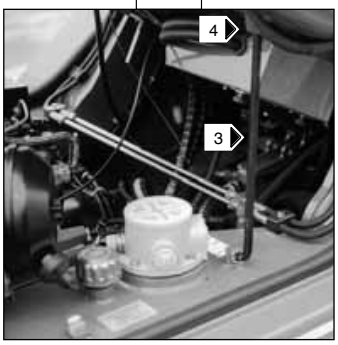

Downloaded from www.Manualslib.com manuals search engine

H8 - LIFT THE CABIN IN THE EVENT OF A MECHANICAL FAILURE IN THE LIFTING SYSTEM.

UP TO MACHINE N° : 117 315

PROCEDURE IN THE EVENT OF AN UNLOCKING CABLE BREAKAGE

- Open the inspection panel of motor 1 (Fig. H8/1)
- Unlock the cabin with the lever 2 (Fig. H 8/2) in position A.
- Disassemble the cowling 3 (Fig. H 8/3) and the rear plate 4 (Fig. H8/4).
- By means of a tool (for example screwdriver), push the lock 5 (Fig. H 8/5) while another operator carries out the procedure of cabin lifting (See chapter : INSTRUMENTS AND CONTROLS in paragraph : 2 - DESCRIPTION).

H8/1

H8/2

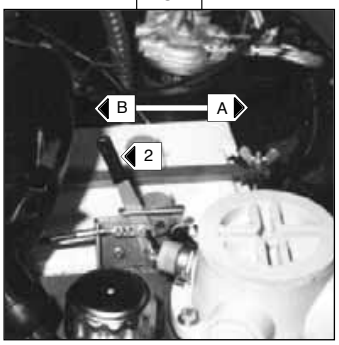

H8/3

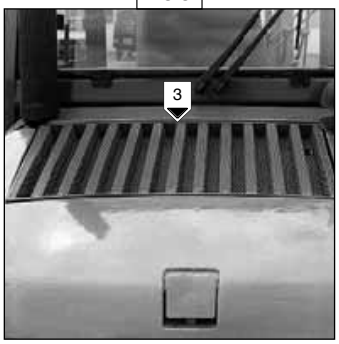

H8/4

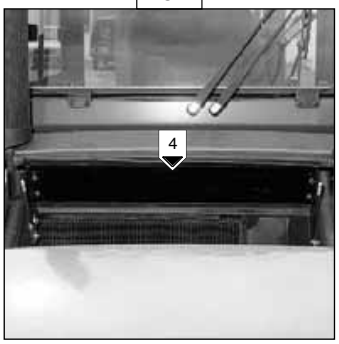

H8/5

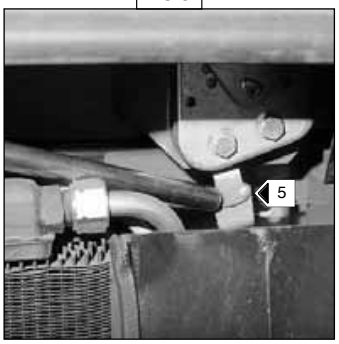

Downloaded from www.Manualslib.com manuals search engine

Torkonjestraat 23
8510 Marke
Belgium
056 / 222 111
info@dumarent.be
www.dumarent.be

4 - ADAPTABLE ATTACHMENTS IN OPTION ON THE RANGE

Downloaded from www.Manualslib.com manuals search engine

Downloaded from www.Manualslib.com manuals search engine

Torkonjestraat 23
8510 Marke
Belgium
056 / 222 111
info@dumarent.be
www.dumarent.be

INTRODUCTION

A wide range of attachments studied and perfectly adapted to your lift truck is available and guaranteed by the manufacturer.

- The attachments are delivered with a load chart concerning your lift truck. The operator's manual and the load chart should be kept in the places provided in the lift truck. For standard attachments, their use is governed by the instructions contained on this notice.

- Some particular uses require the adaptation of the attachment which is not provided in the price-listed options. Optional solutions exist, consult your dealer.

It is COMPULSORY for all ATTACHMENTS WITH SUSPENDED LOAD (Hoist, crane jib, crane jib with winch, hook, etc.) to be used with a fork lift fitted with AUTOMATIC HYDRAULIC MOVEMENT CUT-OFF.

Only attachments approved by the manufacturer are to be used on our lift trucks (See chapter : TECHNICAL SPECIFICATIONS OF ATTACHMENTS in paragraph : 4 - ADAPTABLE ATTACHMENTS IN OPTION ON THE RANGE). The manufacturer's liability will be denied in case of modification or of attachment adaptation carried out without his knowing it.

Maximum loads are defined by the capacity of a lift truck taking account of the attachment's weight and centre of gravity. In the event of the attachment having less capacity than the lift truck, never exceed this limit.

Downloaded from www.Manualslib.com manuals search engine

TECHNICAL SPECIFICATIONS OF ATTACHMENTS

LOAD BACK REST

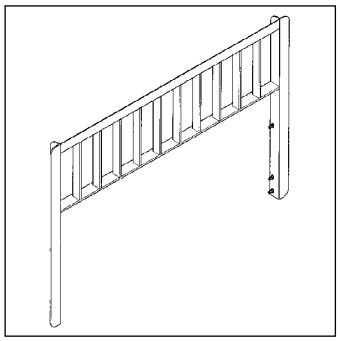

Reference : 572 788 (4T 5T)
Width : 1670 mm
Weight : Kg

Reference : 572 790 (4T 5T)
Width : 2000 mm
Weight : Kg

NORMALISED FORK

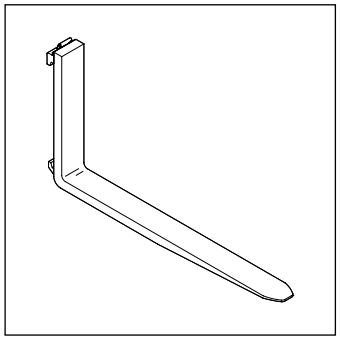

Reference : 415 449 (4T)
Section : 150 x 50 x 1200 mm
Weight : 100 Kg

Reference : 415 450 (5T)
Section : 150 x 60 x 1200 mm
Weight : 128 Kg

Reference : 415 463 (4T)
Section : 150 x 60 x 1200 mm
Weight : 112 Kg

FORKS EXTENSION

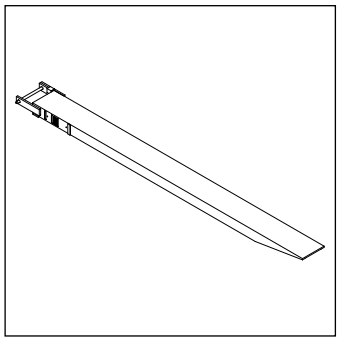

- RF 50 -

Reference : 34 584
Nominal load capacity: 2500 Kg
Lenght : 2000 mm
Section : 200 x 75 mm
Weight : 65 Kg

- RF 50-2500 -

Reference : 468 586
Nominal load capacity: 2500 Kg
Lenght : 2500 mm
Section : 200 x 75 mm
Weight : 70 Kg

Downloaded from www.Manualslib.com manuals search engine

SIDE-SHIFT NORMALIZED CARRIAGE

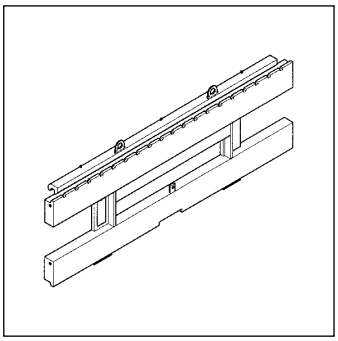

- TDLA 40N 1670 -

Reference	
. For double mast	: 572 303
. For triple mast	: 572 069
Nominal load capacity	: 4000 Kg
Side-shift	: 2 x 100 mm
Width	: 1670 mm
Weight	: 335 Kg

- TDLA 50N 1670 -

Reference	
. For double mast	: 572 305
. For triple mast	: 572 070
Nominal load capacity	: 4500 Kg
Side-shift	: 2 x 100 mm
Width	: 1670 mm
Weight	: 383 Kg

- TDLA 40N 2000 -

Reference	
. For double mast	: 572 304
. For triple mast	: 572 071
Nominal load capacity	: 3600 Kg
Side-shift	: 2 x 100 mm
Width	: 2000 mm
Weight	: 380 Kg

- TDLA 50N 2000 -

Reference	
. For double mast	: 572 306
. For triple mast	: 572 072
Nominal load capacity	: 4500 Kg
Side-shift	: 2 x 100 mm
Width	: 2000 mm
Weight	: 440 Kg

DOUBLE SIDE-SHIFT NORMALIZED CARRIAGE

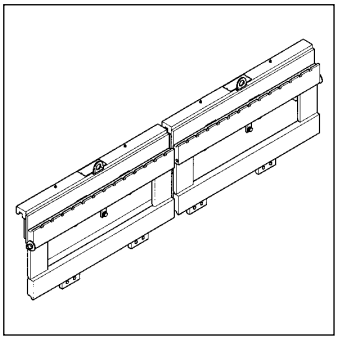

- DOUBLE TDLA 40N -

Reference	: 572 401
Nominal load capacity	: 2 x 2000 Kg
Side-shift	: 2 x 150/100 mm
Width	: 2 x 985 mm
Weight	: 2 x 132 Kg

- DOUBLE TDLA 40N -

Reference	: 572 404
Nominal load capacity	: 2 x 2500 Kg
Side-shift	: 2 x 150/100 mm
Width	: 2 x 985 mm
Weight	: 2 x 165 Kg

NORMALISED FORK (MOUNTED ON DOUBLE SIDE-SHIFT NORMALIZED CARRIAGE)

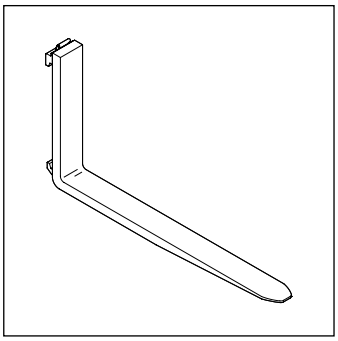

Reference	: 415 743 (4T)
Section	: 125 x 40 x 1200 mm
Weight	: 62 Kg

Reference	: 415 744 (5T)
Section	: 125 x 40 x 1200 mm
Weight	: 67 Kg

Downloaded from www.Manualslib.com manuals search engine

EARTHMOVING BUCKET

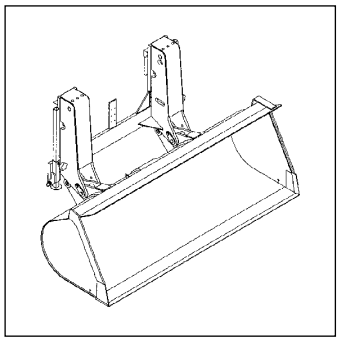

- SP 700 40N SD -

Reference	: 556 302
Nominal load capacity	: 700 L / 1260 Kg
Width	: 2100 mm
Weight	: 605 Kg

- SP 700 40N AD -

Reference	: 556 303
Nominal load capacity	: 700 L / 1260 Kg
Width	: 2100 mm
Weight	: 630 Kg

- SP 700 50N SD -

Reference	: 556 306
Nominal load capacity	: 700 L / 1260 Kg
Width	: 2100 mm
Weight	: 580 Kg

- SP 700 50N AD -

Reference	: 556 307
Nominal load capacity	: 700 L / 1260 Kg
Width	: 2100 mm
Weight	: 605 Kg

- SP 1000 40N SD -

Reference	: 556 304
Nominal load capacity	: 1000 L / 1800 Kg
Width	: 2200 mm
Weight	: 690 Kg

- SP 1000 40N AD -

Reference	: 556 305
Nominal load capacity	: 1000 L / 1800 Kg
Width	: 2200 mm
Weight	: 715 Kg

- SP 1000 50N SD -

Reference	: 556 308
Nominal load capacity	: 1000 L / 1800 Kg
Width	: 2200 mm
Weight	: 665 Kg

- SP 1000 50N AD -

Reference	: 556 309
Nominal load capacity	: 1000 L / 1800 Kg
Width	: 2200 mm
Weight	: 690 Kg

GRAIN AND FERTILIZER BUCKET

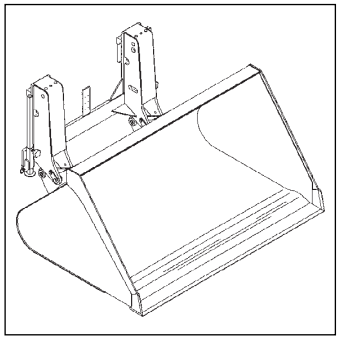

- BCE 1500 40N -

Reference	: 556 296
Nominal load capacity	: 1500 L / 1800 Kg
Width	: 2100 mm
Weight	: 775 Kg

- BCE 1500 50N -

Reference	: 556 299
Nominal load capacity	: 1500 L / 1800 Kg
Width	: 2100 mm
Weight	: 750 Kg

- BCE 2000 40N -

Reference	: 556 297
Nominal load capacity	: 2000 L / 2400 Kg
Width	: 2100 mm
Weight	: 870 Kg

- BCE 2000 50N -

Reference	: 556 300
Nominal load capacity	: 2000 L / 2400 Kg
Width	: 2100 mm
Weight	: 845 Kg

- BCE 2500 40N -

Reference	: 556 298
Nominal load capacity	: 2500 L / 3000 Kg
Width	: 2100 mm
Weight	: 950 Kg

- BCE 2500 50N -

Reference	: 556 301
Nominal load capacity	: 2500 L / 3000 Kg
Width	: 2100 mm
Weight	: 925 Kg

Downloaded from www.Manualslib.com manuals search engine

Torkonjestraat 23
8510 Marke
Belgium
056 / 222 111
info@dumarent.be
www.dumarent.be

SPOUT BUCKET (ADAPTABLE ON FORKS)

- GL 600 S2 -

Reference	: 174 245
Nominal load capacity	: 600 L / 1320 Kg
Weight	: 277 Kg

- GL 800 S2 -

Reference	: 174 246
Nominal load capacity	: 800 L / 1760 Kg
Weight	: 308 Kg

- GL 1000 S2 -

Reference	: 174 247
Nominal load capacity	: 1000 L / 2200 Kg
Weight	: 325 Kg

- GL 1500 S2 -

Reference	: 174 248
Nominal load capacity	: 1500 L / 3300 Kg
Weight	: 375 Kg

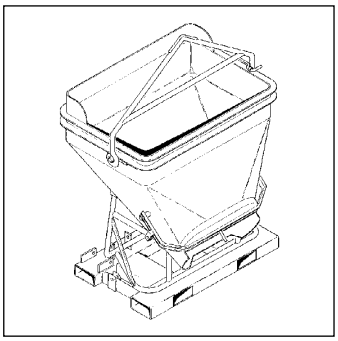

Downloaded from www.Manualslib.com manuals search engine

Torkonjestraat 23
8510 Marke
Belgium
056 / 222 111
info@dumarent.be
www.dumarent.be

ATTACHMENT SHIELDS

FORK PROTECTOR

Reference : 227801

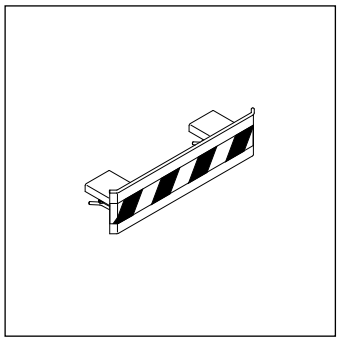

BUCKET PROTECTOR

NOTE : Always ensure that the width of the protector you choose is less than or equal to the width of the bucket.

Reference : 206732
Width : 1500 mm

Reference : 206728
Width : 1950 mm

Reference : 206724
Width : 2150 mm

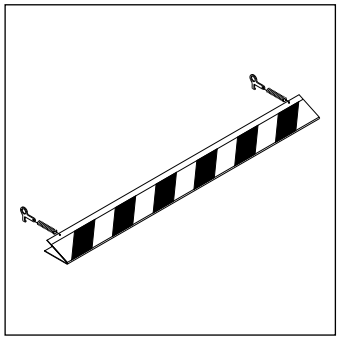

Downloaded from www.Manualslib.com manuals search engine