https://truckmanualshub.com/

MANITOU
HANDLING YOUR WORLD

647732 US (31/10/2019)

# MT 625 H 75K ST5 S1
# MT 625 H 75K COMFORT ST5 S1

## OPERATOR'S MANUAL
*(ORIGINAL INSTRUCTIONS)*

https://truckmanualshub.com/

***IMPORTANT***

***Carefully read and understand this instruction manual before using the lift truck.***

***It contains all information relating to operation, handling and lift truck equipment, as well as important recommendations to be followed.***

***This document also contains precautions for use, as well as information on the servicing and routine maintenance required to ensure the lift truck's continued safety of use and reliability.***

**WHENEVER YOU SEE THIS SYMBOL IT MEANS:**

**⚠ IMPORTANT ⚠**

**WARNING ! BE CAREFUL ! YOUR SAFETY OR THE SAFETY OF THE LIFT TRUCK IS AT RISK.**

- This manual has been produced on the basis of the equipment list and the technical characteristics given at the time of its design.
- The level of equipment of the lift truck depends on the options chosen and the country of sale.
- According to the lift truck options and the date of sale, certain items of equipment/functions described herein may not be available.
- Descriptions and figures are non binding.
- MANITOU reserves the right to change its models and their equipment without being required to update this manual.
- The MANITOU network, consisting exclusively of qualified professionals, is at your disposal to answer all your questions.
- This manual is an integral part of the lift truck.
- It is to be kept in its storage space at all times for ease of reference.
- Hand this manual to the new owner if the lift truck is resold.

## *CALIFORNIA PROPOSITION 65 WARNINGS*

### ⚠ WARNING

This product can expose you to lead which is known to the State of California to cause cancer and birth defects or other reproductive harm.

For more information go to www.P65Warnings.ca.gov

### ⚠ WARNING

Breathing diesel engine exhaust exposes you to chemicals known to the State of California to cause cancer and birth defects or other reproductive harm.

- Always start and operate the engine in a well-ventilated area.
- If in an enclosed area, vent the exhaust to the outside.
- Do not modify or tamper with the exhaust system.
- Do not idle the engine except as necessary.

For more information go to www.P65Warnings.ca.gov/diesel

## *SILICA DUST HAZARD*

Exposure to crystalline silica (found in sand, soil and rocks) has been associated with silicosis, a debilitating and often fatal lung disease. Comply with all applicable rules and regulations for the workplace. Wear approved respiratory protection or use water spray or other means if there is no other way to control the dust.

A Silica rule "29 CFR 1929.1153" by the U.S. Occupational Safety and Health (OSHA) indicates a signicant risk of chronic silicosis for workers exposed to inhaled crystalline silica over a working lifetime. Refer to the rule for more information regarding exposure limits and hazard prevention.

https://truckmanualshub.com/

| 1st ISSUE | 28/01/2019 | |
|---|---|---|
| UPDATED | 31/10/2019 | 2-6 – 2-9 ; 2-12 ; 2-14 ; 2-18 – 2-21 ; 2-32 ; 2-33 – 2-35 ; 2-37 – 2-39 ;<br>2-42 ; 2-43 ; 2-45 – 2-54<br>3-9 ; 3-10 ; 3-23<br>4-5 – 4-7 ; 4-9 – 4-11 |

*Manitou BF S.A Limited liability company with a Board of Directors.*
*Head office: 430, Rue de l'Aubinière - 44150 Ancenis - FRANCE*
*Share capital: 39,548,949 euros*
*857 802 508 RCS Nantes.*
*Tel: +33 (0)2 40 09 10 11*
*www.manitou.com*

*This manual is for information purposes only. Any reproduction, copy, representation, recording, transfer, distribution, or other, in part or in whole, in any format is prohibited. The plans, designs, views, commentaries and instructions, even the document organization that are found in this document, are the intellectual property of MANITOU BF. Any violation of the aforementioned may lead to civil and criminal prosecution. The logos as well as the visual identity of the company are the property of MANITOU BF and may not be used without express and formal authorization. All rights are reserved.*

https://truckmanualshub.com/

# 1 - OPERATING AND SAFETY INSTRUCTIONS

# 2 - DESCRIPTION

# 3 - MAINTENANCE

# 4 - OPTIONAL ADAPTABLE ATTACHMENTS FOR THE RANGE

647732 (31/10/2019)
MT 625 H 75K ST5 S1 / MT 625 H 75K COMFORT ST5 S1

https://truckmanualshub.com/

# 1 - OPERATING AND SAFETY INSTRUCTIONS

https://truckmanualshub.com/

https://truckmanualshub.com/

RED UCE 04

# ASSISTANCE I 23 SIMPLE TIPS

The Manitou Group wishes to assist you in reducing the consumption of the machines to help you reduce your carbon footprint.

- Chose a machine with an appropriate power rating for your needs.
- Switch off your engine after running at idle for more than 3 minutes.
- Optimum engine efficiency is achieved at the maximum torque engine speed.
- Preferably use a fan control and reversal system.
- Favor "smart" electronically-managed transmissions.
- Use the air-conditioning with windows and doors closed.
- Preferably use LED headlights.
- Adapt the type of tire to your environment.
- Ensure that your tires are inflated to the correct pressure.
- Check the parking brake adjustment.

## Preferably use manufacturer-recommended attachments

- Check the general condition of your trailer.
- Adapt your maximum towable load.
- Use the attachments that are suitable for your machine.
- Check the hydraulic adjustment of your attachments.

- Observe the maintenance periods.
- Regularly clean the radiator, the air filter, etc.
- Lubricate regularly.
- Preferably buy through a manufacturer-approved dealer.
- Favor OEM parts.
- Study the manufacturers' maintenance contracts.
- You can follow eco-driving courses.
- Demand to know the consumption and emissions of the machines.
- Calculate your consumption and emissions at reduce.manitou.com

647732 (31/10/2019)
MT 625 H 75K ST5 S1 / MT 625 H 75K COMFORT ST5 S1

https://truckmanualshub.com/

# 1 - OPERATING AND SAFETY INSTRUCTIONS


## INSTRUCTIONS TO THE COMPANY MANAGER 1-6

**THE SITE** 1-6

**THE OPERATOR** 1-6

**THE LIFT TRUCK** 1-6
- A - SUITABILITY OF THE LIFT TRUCK FOR THE JOB . . . 1-6
- B - ADAPTATION OF THE LIFT TRUCK TO STANDARD ENVIRONMENTAL CONDITIONS . . . 1-6
- C - MODIFICATION OF THE LIFT TRUCK. . . . 1-7
- D - FRENCH ROAD TRAFFIC RULES . . . 1-7
- E - LIFT TRUCK CAB PROTECTION . . . 1-7

**INSTRUCTIONS** 1-8

**MAINTENANCE** 1-8

## INSTRUCTIONS FOR THE OPERATOR 1-10

**FOREWORD** 1-10

**GENERAL INSTRUCTIONS** 1-10
- A - OPERATOR'S MANUAL . . . 1-10
- B - AUTHORISATION FOR USE IN FRANCE . . . 1-10
- C - MAINTENANCE . . . 1-10
- D - TYRES . . . 1-10
- E - MODIFICATION OF THE LIFT TRUCK. . . . 1-11
- F - LIFTING PEOPLE . . . 1-11

**OPERATING INSTRUCTIONS UNLADEN AND LADEN** 1-12
- A - BEFORE STARTING THE LIFT TRUCK. . . . 1-12
- B - AVAILABLE IN THE DRIVER'S CAB . . . 1-12
- C - ENVIRONMENT . . . 1-12
- D - VISIBILITY . . . 1-13
- E - STARTING THE LIFT TRUCK . . . 1-14
- F - DRIVING THE LIFT TRUCK . . . 1-14
- G - STOPPING THE LIFT TRUCK . . . 1-15
- H - DRIVING THE LIFT TRUCK ON THE PUBLIC HIGHWAY . . . 1-16

**INSTRUCTIONS FOR HANDLING A LOAD** 1-18
- A - CHOICE OF ATTACHMENTS. . . . 1-18
- B - WEIGHT OF LOAD AND CENTRE OF GRAVITY. . . . 1-18
- C - LONGITUDINAL STABILITY INDICATOR. . . . 1-18
- D - TRANSVERSE ATTITUDE OF THE LIFT TRUCK . . . 1-19
- E - PICKING UP A LOAD ON THE GROUND. . . . 1-19
- F - PICKING UP AND PUTTING DOWN A HIGH LOAD ON TYRES . . . 1-20
- G - PICKING UP AND PUTTING DOWN A HIGH LOAD ON STABILISERS . . . 1-22
- H - PICKING UP AND PUTTING DOWN A SUSPENDED LOAD . . . 1-24
- I - TRAVELLING WITH A SUSPENDED LOAD . . . 1-24

**INSTRUCTIONS FOR USE AS A LOADER** 1-25
- A - LOADING . . . 1-25
- B - BACKFILLING. . . . 1-25

**PLATFORM OPERATING INSTRUCTIONS** 1-26
- A - AUTHORISATION FOR USE . . . 1-26
- B - SUITABILITY OF THE PLATFORM FOR THE JOB . . . 1-26
- C - PROVIDED ON THE PLATFORM. . . . 1-26
- D - USING THE PLATFORM. . . . 1-26
- E - ENVIRONMENT. . . . 1-27
- F - MAINTENANCE. . . . 1-27

**INSTRUCTIONS FOR USING THE RADIO-CONTROL** 1-28
- HOW TO USE THE RADIO-CONTROL . . . 1-28
- PROTECTIVE DEVICES . . . 1-28

https://truckmanualshub.com/


## LIFT TRUCK MAINTENANCE INSTRUCTIONS 1-30

**GENERAL INSTRUCTIONS** **1-30**

**PLACING THE BOOM SAFETY WEDGE** **1-30**
FITTING THE WEDGE . . . . . 1-30
REMOVING THE WEDGE . . . . . 1-30

**MAINTENANCE** **1-30**
MAINTENANCE LOGBOOK . . . . . 1-30

**LUBRICANT AND FUEL LEVELS** **1-31**

**HYDRAULICS** **1-31**

**ELECTRICITY** **1-31**

**WELDING** **1-31**

**WASHING THE LIFT TRUCK** **1-31**

**TRANSPORTING THE LIFT TRUCK** **1-31**

## IF THE LIFT TRUCK IS NOT TO BE USED FOR A LONG TIME 1-32

**INTRODUCTION** **1-32**

**PREPARING THE LIFT TRUCK** **1-32**

**DEF (Diesel Exhaust Fluid) TANK** **1-32**

**PROTECTING THE ENGINE** **1-32**

**PROTECTING THE LIFT TRUCK** **1-32**

**BRINGING THE LIFT TRUCK BACK INTO SERVICE** **1-33**

## LIFT TRUCK DISPOSAL 1-34

**RECYCLING OF MATERIALS** **1-34**
METALS . . . . . 1-34
PLASTICS . . . . . 1-34
RUBBER . . . . . 1-34
GLASS . . . . . 1-34

**ENVIRONMENTAL PROTECTION** **1-34**
WORN OR DAMAGED PARTS . . . . . 1-34
USED OIL . . . . . 1-34
USED BATTERIES. . . . . 1-34

https://truckmanualshub.com/

# INSTRUCTIONS TO THE COMPANY MANAGER

## THE SITE

Proper management of lift truck's area of travel will reduce the risk of accidents:

- ground not unnecessarily uneven or obstructed,
- no excessive slopes,
- pedestrian traffic controlled, etc.

## THE OPERATOR

- Only qualified, authorised personnel can use the lift truck. This authorisation is given in writing by the competent manager in the establishment for the use of lift trucks and must be carried permanently by the operator.

**⚠ IMPORTANT ⚠**

*Experience has shown that there are a number of inappropriate ways in which the lift truck might be used. Such foreseeable misuse, of which the main examples are listed below, are strictly forbidden.*

*- The foreseeable abnormal behaviour resulting from ordinary negligence, but which does not result from any wish to put the machinery to any improper use.*

*- The reflex reactions of a person in the event of a malfunction, incident, fault, etc. during operation of the lift truck.*

*- Behaviour resulting from application of the "principle of least effort" when performing a task.*

*- For certain machines, the foreseeable behaviour of such persons as: apprentices, teenagers, handicapped persons, trainees tempted to drive a lift truck, operators tempted to operate a truck for the purposes of a bet, a competition or for their own personal experience.*

*The person in charge of the equipment must take these criteria into account when assessing the suitability of a person to drive.*

## THE LIFT TRUCK

### A - SUITABILITY OF THE LIFT TRUCK FOR THE JOB

- MANITOU has ensured that this lift truck is suitable for use under the standard operating conditions defined in this operator's manual, with a **STATIC TEST COEFFICIENT 1.25** and a **DYNAMIC TEST COEFFICIENT OF 1**, as specified in harmonised standard **EN 1459** for mast trucks.
- Before commissioning, the company manager must make sure that the lift truck is appropriate for the work to be done, and perform certain tests (in accordance with current legislation).

### B - ADAPTATION OF THE LIFT TRUCK TO STANDARD ENVIRONMENTAL CONDITIONS

- Our lift trucks are designed to be used within a temperature range of -18 °C to +43 °C.
- In addition to standard equipment mounted on your lift truck, many options are available, such as: road lighting, brake lights, rotating beacon light, reversing lights, reversing sound alarm, front working light, rear working light, boom head working light, etc. (according to the lift truck model).
- The operator must take into account the operating conditions to specify the lift truck's signalling and lighting equipment. Contact your dealer.
- Take into account the weather and atmospheric conditions of the site in use.
  - Protection against frost (◁ 3 - MAINTENANCE: LUBRICANTS AND FUEL).
  - Adaptation of lubricants (ask your dealer for information).
  - Engine filtration (◁ 3 - MAINTENANCE: FILTER CARTRIDGES AND BELTS).

**⚠ IMPORTANT ⚠**

*For use in average weather conditions, i.e. between -15°C and +35°C, the lubricants are topped up in the factory.*

*For operation under more severe climatic conditions, before starting up, it is necessary to drain all the circuits, then ensure correct levels of lubricants using lubricants properly suited to the relevant ambient temperatures.*

*The same applies to the cooling liquid.*

- Preventing fire risks associated with use in dusty and flammable conditions (e.g. straw, flour, sawdust, organic waste, etc.).
- A lift truck operating in an area without fire extinguishing equipment must be equipped with an individual extinguisher. There are solutions, consult your dealer.

**⚠ IMPORTANT ⚠**

*Your lift truck is designed for outdoor use under normal atmospheric conditions and indoor use in suitably aerated and ventilated premises.*

*It is prohibited to use the lift truck in areas where there is a risk of fire or which are potentially explosive (e.g. Refineries, fuel or gas depots, stores of flammable products, etc.).*

*For use in these areas, specific equipment is available (ask your dealer for information).*

- Our lift trucks comply with Directive 2004/108/EC concerning electromagnetic compatibility (EMC), and with the corresponding harmonised standard EN 12895. Their correct operation is no longer guaranteed if they are used within areas in which the electromagnetic fields exceed the limit specified by this standard (10 V/m).

https://truckmanualshub.com/

- Directive 2002/44/EC requires company managers to not expose their employees to excessive vibration doses. There is no recognised code of measurement for comparing the machines of different manufacturers. The actual doses received cannot therefore be measured under actual operating conditions at the user's premises.
- The following are some tips for minimizing these vibration doses:
  - Select the most suitable lift truck and attachment for the intended use.
  - Adapt the seat adjustment to the operator's weight (according to lift truck model) and maintain it in good condition, as well as the cab suspensions. Inflate the tyres in accordance with recommendations.
  - The seat is an essential way of reducing the vibrations transmitted to the operator. In the event of seat replacement, please contact MANITOU.
  - Ensure that the operators adapt their operating speed to suit the conditions on site.
  - As far as possible, arrange the site in such a way as to provide a flat running surface and remove obstacles and harmful potholes.

## C - MODIFICATION OF THE LIFT TRUCK

- For your safety and that of others, you must not change the structure and settings of the various components used in your lift truck (hydraulic pressure, calibrating limiters, engine speed, addition of extra equipment, addition of counterweight, unapproved attachments, alarm systems, etc.) yourself. In this event, the manufacturer cannot be held responsible.

## D - FRENCH ROAD TRAFFIC RULES

(or see current legislation in other countries)

- Only one EC declaration of conformity is issued. It must be kept in a safe place.
- The road traffic rules of lift trucks are subject to the provisions of the highway code, according to the following categories:
  - Construction-type trucks (MT range): public works vehicle not predominantly for use on roads (point 6.9 of Article R311-1 of the French Highway Code). The truck must have a 25 disc displayed on the rear of the vehicle and an operating licence plate.
  - Agricultural-type trucks (MLT range) that are non-EC type approved tractors: (point 6.2 of Article R311/1 of the French Highway Code). The truck must be fitted with an operating licence plate.
  - Agricultural-type trucks (MLT range) that are EC type approved tractors: agricultural tractor type T1a (point 5.1.1 of Article R311/1 of the French Highway Code). The truck must be registered.

SPECIAL INSTRUCTION APPLYING TO "EC TRACTOR" TYPE-APPROVED LIFT TRUCKS

- All EC tractor type-approved lift trucks are supplied with an "EC tractor" certificate complying with directive 2003/37/EC, to be retained by the owner, and a page of administrative details together with a CNIT number (national type approval code) for registration at the prefecture.
- The lift truck owner is responsible for carrying out the necessary procedures for obtaining the vehicle registration document within the time limit defined by the regulations.
- The operator must hold a category B driver's licence, unless granted an exemption.
- The lift truck must be driven on the public highway in accordance with the instructions given in the manual supplied with the lift truck (Gross weight, Gross combination weight, towing load, axle loads, maximum speeds, etc. according to type/version). The operator must be in possession of the lift truck's registration document.

**⚠ IMPORTANT ⚠**

***When towing a trailer or agricultural equipment, the travelling speed of the lift truck is limited to 25 km/h.***
***In this case, a "25" disc must be affixed to the rear of the convoy.***

## E - LIFT TRUCK CAB PROTECTION

- All lift trucks comply with the requirements of ISO 3471 (wheel loader code) regarding cab rollover protection (ROPS) and ISO 3449 (Level I) regarding the protection of the cab against falling objects (FOPS).
- "EC TRACTOR" type-approved lift trucks comply, in addition, with Directive 79/622/EC (OECD Code 4) regarding cab rollover protection (ROPS).

**⚠ IMPORTANT ⚠**

***Structural damage or overturning, a modification, changes or a poorly executed repair can reduce the protective efficiency of the cab, cancelling its compliance.***
***Do not perform welding or drilling on the cab structure.***
***Consult your dealer to determine the limits of this structure without cancelling its compliance.***

https://truckmanualshub.com/

## INSTRUCTIONS

- The operator's manual must always be in good condition and kept in the place provided on the lift truck and in the language used by the operator.
- The operator's manual and any plates or stickers which are no longer legible or are damaged, must be replaced immediately.

## MAINTENANCE

- Maintenance or repairs other than those detailed in Part: 3 - MAINTENANCE must be carried out by qualified personnel (consult your dealer) and in the necessary safety conditions to preserve the health of the operator and any third party.

**⚠ IMPORTANT ⚠**

***Your lift truck must be inspected periodically to ensure that it remains in compliance.***
***The frequency of this inspection is defined by current legislation in the country in which the lift truck is used.***

- Example for France "The manager in charge of the establishment using a lift truck must open and maintain a maintenance log for each machine (order of 2 March 2004) and undergo a general periodic inspection every 6 months (order of 1 March 2004)".

https://truckmanualshub.com/

https://truckmanualshub.com/

# INSTRUCTIONS FOR THE OPERATOR

## FOREWORD

**⚠ IMPORTANT ⚠**

*The risk of accident while using, servicing or repairing your lift truck can be restricted if you follow the safety instructions and safety measures detailed in these instruction. Failure to respect the safety and operating instructions, or the instructions for repairing or servicing your lift truck may lead to serious, even fatal accident.*

- Only the operations and manoeuvres described in these operator's manual must be performed. The manufacturer cannot predict all possible risky situations. Consequently, the safety instructions given in the operator's manual and on the lift truck itself are not exhaustive.
- At any time, as an operator, you must envisage, within reason, the possible risk to yourself, to others or to the lift truck itself when you use it.

**⚠ IMPORTANT ⚠**

*In order to reduce or prevent any danger with a MANITOU-approved attachment, follow the instructions in Paragraph: 4 - ADAPTABLE ATTACHMENTS AS OPTIONS ON THE RANGE: INTRODUCTION.*

## GENERAL INSTRUCTIONS

### A - OPERATOR'S MANUAL

- Read the operator's manual carefully.
- The operator's manual must always be in good condition and in the place provided for it on the lift truck.
- You must report any plates and stickers which are no longer legible or which are damaged.

### B - AUTHORISATION FOR USE IN FRANCE

(or see current legislation in other countries).

- Only qualified, authorized personnel can use the lift truck. This authorization is given in writing by the appropriate person in the establishment with respect to the use of lift trucks and must be carried permanently by the operator.
- The operator is not competent to authorise the driving of the lift truck by another person.

### C - MAINTENANCE

- The operator must immediately advise his superior if his lift truck is not in good working order or does not comply with the safety notice.
- The operator is prohibited from carrying out any repairs or adjustments himself, unless he has been trained for this purpose. He must keep the lift truck properly cleaned if this is among his responsibilities.
- The operator is responsible for carrying out daily maintenance (◁ 3 - MAINTENANCE).
- The operator is responsible for deciding and adjusting the frequency of cleaning needed to prevent the risk of fire ensuing from the build-up of flammable material(s). The operator should pay special attention to all the areas of the lift truck where these risk materials are likely to accumulate.

### D - TYRES

- The operator must ensure tyres are adapted to the nature of the ground (see area of the contact surface of the tyres in the chapter: 2 - DESCRIPTION: TYRES). There are optional solutions, consult your dealer.
  - SAND tyres.
  - FARM tyres.
  - Snow chains.
- The lift truck's four tyres must be the same brand and the same usage category (normal, snow or special), have the same structure (radial or diagonal) and have the same degree of tread wear.
- In the event of tyre replacement, use tyres authorised by MANITOU that are the same type and dimensions. Using different tyres voids the lift truck's type approval and you may be liable.
- If you are replacing just one of the lift truck's tyres (e.g. because it is damaged), we recommend choosing a tyre with the same degree of wear as the remaining tyres so as not the damage the transmission's kinematic chain.

**⚠ IMPORTANT ⚠**

*Do not use the lift truck if the tyres are incorrectly inflated, damaged or excessively worn, because this could put your own safety or that of others at risk, or cause damage to the lift truck itself.*

*The fitting of foam inflated tyres is prohibited and is not guaranteed by the manufacturer, excepting prior authorisation.*

https://truckmanualshub.com/

## E - MODIFICATION OF THE LIFT TRUCK

- For your safety and that of others, you must not change the structure and settings of the various components used in your lift truck (hydraulic pressure, calibrating limiters, engine speed, addition of extra equipment, addition of counterweight, unapproved attachments, alarm systems, etc.) yourself. In this event, the manufacturer cannot be held responsible.

## F - LIFTING PEOPLE

- The use of working equipment and load lifting attachments to lift people is:
  - either forbidden
  - or authorised exceptionally and under certain conditions (regulations in force in the country in which the lift truck is used).
- The pictogram posted at the operator station reminds you that:

  Left-hand column
  - It is forbidden to lift people, with any kind of attachment, using a non PLATFORM-fitted lift truck.

  Right-hand column
  - With a PLATFORM-fitted lift truck, people can only be lifted using platforms designed by MANITOU for the purpose.
- MANITOU sells equipment specifically designed for lifting people (OPTION PLATFORM lift truck, contact your dealer).

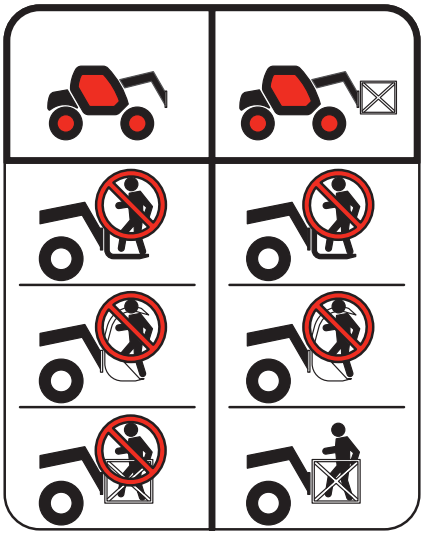

https://truckmanualshub.com/



**A - BEFORE STARTING THE LIFT TRUCK**

- Perform the daily maintenance operations (◁ 3 - MAINTENANCE).
- Make sure that the driver's cab is clean, particularly the floor and floor mat. Check that no movable object may hinder the operation of the lift truck.
- Make sure the lights, indicators and windscreen wipers are working properly.
- Make sure the rear view mirrors are in good condition, clean and properly adjusted.
- Make sure the horn works.

**B - AVAILABLE IN THE DRIVER'S CAB**

- Whatever his experience, the operator is advised to familiarize himself with the position and operation of all the controls and instruments before operating the lift truck.
- Wear clothes suited for driving the lift truck, avoid loose clothes.
- Make sure you have the appropriate protective equipment for the task to be performed.
- Prolonged exposure to high noise levels may cause hearing problems. It is recommended to wear ear muffs to protect against excessive noise.
- Always face the driver's cab access when getting in and out of the lift truck and use the handle(s) provided for this purpose. Do not jump out of the lift truck to get down.
- Always pay attention when using the lift truck. Do not listen to the radio or music using headphones or earphones.
- Never operate the lift truck when hands or feet are wet or soiled with greasy substances.
- For increased comfort, adjust the seat to your requirements and adopt the correct position in the driver's cab.

**⚠ IMPORTANT ⚠**

***Under no circumstances must the seat be adjusted while the lift truck is moving.***

- The operator must always be in his normal position in the driver's cab. It is prohibited to have arms or legs, or generally any part of the body, protruding from the driver's cab of the lift truck.
- The safety belt must be worn and adjusted to the operator's size.
- The control units must never in any event be used for any other than their intended purposes (e.g. climbing onto or down from the lift truck, portmanteau, etc.).
- If the control components are fitted with a forced operation (lever lock) device, it is forbidden to leave the cab without first putting these controls in neutral.
- It is prohibited to carry passengers either on the lift truck or in the driver's cab.

**C - ENVIRONMENT**

- Comply with site safety regulations.
- If you have to use the lift truck in a dark area or at night, make sure it is equipped with working lights.
- During handling operations, make sure that no one is in the way of the lift truck and its load.
- Do not allow anybody to come near the working area of the lift truck or pass beneath an elevated load.
- When using the lift truck on a transverse slope, before lifting the boom observe the instructions given in the paragraph: INSTRUCTIONS FOR HANDLING A LOAD: D - TRANSVERSE ATTITUDE OF THE LIFT TRUCK.
- Travelling on a longitudinal slope:
  - Drive and brake gently.
  - Moving without load: forks or attachment facing downhill. 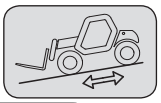
  - Moving with load: Forks or attachment facing uphill. 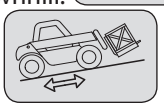

https://truckmanualshub.com/

- Take into account the lift truck's dimensions and its load before trying to negotiate a narrow or low passageway.
- Never move onto a loading platform without having first checked:
  - That it is suitably positioned and made fast.
  - That the unit to which it is connected (wagon, lorry, etc.) will not shift.
  - That this platform is prescribed for the total weight of the lift truck to be loaded.
  - That this platform is prescribed for the size of the lift truck.
- Never move onto a foot bridge, floor or freight lift, without being certain that they are prescribed for the weight and size of the lift truck to be loaded and without having checked that they are in sound working order.
- Be careful in the area of loading bays, trenches, scaffolding, soft ground and manholes.
- Make sure the ground is stable and firm under the wheels and/or stabilizers before lifting or removing the load. If necessary, add sufficient wedging under the stabilizers.
- Make sure that the scaffolding, loading platform, pilings or ground is capable of bearing the load.
- Never stack loads on uneven ground, they may tip over.

**⚠ IMPORTANT ⚠**

*If the load or the attachment must remain above a structure for a prolonged period of time, there is the risk that it will bear on the structure as the boom descends due to cooling of the oil in the cylinders.*

*To eliminate this risk:*

*- Regularly check the distance between the load or the attachment and the structure and readjust this if necessary.*

*- If possible use the lift truck at an oil temperature as close as possible to ambient temperature.*

- When working near aerial lines, ensure that the safety distance is sufficient between the working area of the lift truck and the aerial line.

**⚠ IMPORTANT ⚠**

*You must consult your local electrical agency.*

*You could be electrocuted or seriously injured if you operate or park the lift truck too close to power cables.*

*In the event of high winds, do not carry out handling work that jeopardises the stability of the lift truck and its load, particularly if the load catches the wind badly.*

- Prevent fire risks associated with use in dusty and flammable conditions (e.g. straw, flour, sawdust, organic waste, etc.).

## D - VISIBILITY

- The safety of people within the lift truck's working area, as well as that of the lift truck itself and the operator are depend on good operator visibility of the lift truck's immediate vicinity in all situations and at all times.
- This lift truck has been designed to allow good operator visibility (direct or indirect by means of rear-view mirrors) of the immediate vicinity of the lift truck during running operations, unladen and boom in the transport position.
- Special precautions must be taken if the size of the load restricts visibility towards the front:
  - moving in reverse,
  - site layout,
  - assisted by a person directing the manoeuvre (while standing outside the truck's area of travel), making sure to keep this person clearly in view at all times,
  - in any case, avoid reversing over long distances.
- Certain special accessories may require the truck to travel with the boom in the raised position. In such cases, visibility on the right hand side is restricted, and special precautions must be taken:
  - site layout,
  - assisted by a person directing the manoeuvre (while standing outside the truck's area of travel).
  - replacement of a suspended load by a load on a pallet.
- If visibility of your road is inadequate, ask someone to assist by directing the manoeuvre (while standing outside the truck's area of travel), making sure to keep this person clearly in view at all times.
- Keep all components affecting visibility in a clean, properly adjusted state and in good working order (e.g. windscreens, windows, windscreen wipers, windscreen washers, driving and work lights, rear-view mirrors).

https://truckmanualshub.com/

## E - STARTING THE LIFT TRUCK

SAFETY INSTRUCTIONS

**⚠ IMPORTANT ⚠**

*The lift truck must only be started up or manoeuvred when the operator is sitting in the driver's cab, with his seat belt adjusted and fastened.*

- Never try to start the lift truck by pushing or hauling it. Such an operation may cause severe damage to the transmission. If necessary, towing requires the transmission to be put in neutral (◁ 3 - MAINTENANCE).
- If using an emergency battery for start-up, use a battery with the same characteristics and respect battery polarity when connecting it. Connect at first the positive terminals before the negative terminals.

**⚠ IMPORTANT ⚠**

*Failure to respect polarity between batteries can cause serious damage to the electrical circuit.*
*The electrolyte in the battery may produce an explosive gas. Avoid flames and generation of sparks close to the batteries.*
*Never disconnect a battery while it is charging.*

INSTRUCTIONS

- Check the closing and locking of the hood(s).
- Check that the cab door is closed.
- Check that the forward/reverse selector is in neutral, and that the parking brake is engaged.
- Firmly press the brake pedal and hold in position and hold it down.
- Turn the ignition key to the position I to activate the electrical and preheat system.
- Check the fuel level on the indicator.
- Turn the ignition key fully, the engine should then start. Release the ignition key and let the engine run at idle.
- Do not engage the starter motor for more than 15 seconds and carry out the preheating between unsuccessful attempts.
- Make sure all the signal lights on the control instrument panel are off.
- Check all control instruments when the engine is warm and at regular intervals during use, so as to quickly detect any faults and to be able to correct them without any delay.
- If an instrument does not show the correct display, stop the engine and immediately carry out the necessary operations.

## F - DRIVING THE LIFT TRUCK

SAFETY INSTRUCTIONS

**⚠ IMPORTANT ⚠**

*The operators' attention is drawn to the risks involved in using the lift truck, in particular:*
*- Risk of loosing control.*
*- Risk of loosing lateral and frontal stability of the lift truck.*
*The operator must remain in control of the lift truck.*
*In the event of the lift truck overturning, do not try to leave the cabin during the incident.*
*YOUR BEST PROTECTION IS TO STAY FASTENED IN THE CABIN.*

- Observe the company's traffic regulations or, by default, the public highway code.
- Do not carry out operations which exceed the capacities of your lift truck or attachments.
- Always drive the lift truck with the forks or attachment to the transport position, i.e. at 300 mm from the ground, the boom retracted and the carriage sloping backwards.
- Only carry loads which are balanced and properly anchored to avoid any risk of a load falling off.
- Ensure that pallets, cases, etc. are in good order and suitable for the load to be lifted.
- Familiarise yourself with the lift truck on the terrain where it will be used.
- Ensure that the service brakes are working properly.
- The loaded lift truck must not travel at speeds in excess of 12 km/h.
- Drive smoothly at an appropriate speed for the operating conditions (land configuration, load on the lift truck).
- Do not use the hydraulic boom controls when the lift truck is moving.
- Never change the steering mode whilst driving.
- Do not manoeuvre the lift truck with the boom in the raised position unless under exceptional circumstances and then with extreme caution, at very low speed and using gentle braking. Ensure that visibility is adequate.
- Take bends slowly.
- In all circumstances make sure you are in control of your speed.
- On damp, slippery or uneven terrain, drive slowly.
- Brake gently, never abruptly.
- Only use the lift truck's forward/reverse selector from a stationary position and never do so abruptly.
- Do not drive with your foot on the brake pedal.
- Always remember that hydrostatic type steering is extremely sensitive to movement of the steering wheel, so turn it gently and not jerkily.
- Never leave the engine on when the lift truck is unattended.
- Do not leave the cab when the lift truck has a raised load.
- Look where you are going and always make sure you have good visibility along the route.
- Use the rear-view mirrors frequently.
- Drive round obstacles.

https://truckmanualshub.com/

- Never drive on the edge of a ditch or steep slope.
- It is dangerous to use two lift trucks simultaneously to handle heavy or bulky loads, since this operation requires particular precautions to be taken. It must only be used exceptionally and after risk analysis.
- The ignition switch has an emergency stop mechanism in case of an operating anomaly occurring in the case of lift trucks not fitted with a punch-operated cut-out.

INSTRUCTIONS

- Always drive the lift truck with the forks or attachment to the transport position, i.e. at 300 mm from the ground, the boom retracted and the carriage sloping backwards.
- For lift trucks with gearboxes, use the recommended gear (◁ 2 - DESCRIPTION: CONTROL AND COMMAND INSTRUMENTS).
- Select the steering mode appropriate for the use and/or working conditions (◁ 2 - DESCRIPTION: COMMAND AND CONTROL INSTRUMENTS) (according to model of lift truck).
- Release the hand brake.
- Shift the forward/reverse selector to the selected direction of travel and accelerate gradually until the lift truck moves off.

**⚠ IMPORTANT ⚠**

*Starting and moving the lift truck on a slope may be a real hazard.*
*If the lift truck is parked or stopped, adhere scrupulously to the following instructions for moving it:*
*- Press the service brake pedal.*
*- Engage 1st or 2nd gear* (depending on the lift truck model)
*- Select forward or reverse direction.*
*- Ensure that there is no one or anything impeding the movement of the lift truck.*
*- Release the service brake pedal and accelerate the engine.*
*The use of the lift truck loaded or with a trailer increases the risk. In this case, remain extremely vigilant.*

## G - STOPPING THE LIFT TRUCK

SAFETY INSTRUCTIONS

- Never leave the ignition key in the lift truck during the operator's absence.
- When the lift truck is stationary, or if the operator has to leave his cab (even for a moment), place the forks or attachment on the ground, apply the parking brake and place the forward/reverse selector in neutral.
- Make sure that the lift truck is not stopped in any position that will interfere with the traffic flow and at less than one meter from the track of a railway.
- In the event of prolonged parking on a site, protect the lift truck from bad weather, particularly from frost (check the level of antifreeze), close and lock all the lift truck accesses (doors, windows, cowls, etc.).

INSTRUCTIONS

- Park the lift truck on flat ground or on an incline lower than 15%.
- Set the forward/reverse selector to neutral.
- Apply the parking brake.
- For lift trucks with gearboxes, place the gear lever in neutral.
- Fully retract the boom.
- Lower the forks or attachment to rest on the ground.
- When using an attachment with a grab or jaws, or a bucket with hydraulic opening, close the attachment fully.
- Before stopping the lift truck after a long working period, leave the engine idling for a few moments, to allow the coolant liquid and oil to lower the temperature of the engine and transmission. Do not forget this precaution, in the event of frequent stops or warm stalling of the engine, or else the temperature of certain parts will rise significantly due to the stopping of the cooling system, with the risk of badly damaging such parts.
- Stop the engine with the ignition switch.
- Remove the ignition key.
- Lock all access to the lift truck (doors, windows, cowls, etc).

https://truckmanualshub.com/

## H - DRIVING THE LIFT TRUCK ON THE PUBLIC HIGHWAY

(or see current legislation in other countries)

FRENCH ROAD TRAFFIC RULES

- The driving of non EC type-approved tractors on the public highway is subject to the provisions of the highway code relating to special machines, defined in article R311-1 of the highway code, in category B of the Equipment Order of 20 November 1969 that determines the procedures applicable to special machines. The lift truck must be fitted with a licence plate.
- The driving of EC type-approved tractors on the public highway is subject to the provisions of the highway code regarding agricultural tractors, defined in article R311-1 of the highway code. The lift truck must be registered.
- The lift truck must be driven on the public highway in accordance with the instructions given in the manual supplied with the lift truck (Gross weight, Gross combination weight, towing load, axle loads, maximum speeds, etc. according to type/version). The operator must be in possession of the lift truck's registration document.
- The operator must hold an HGV licence, unless granted an exemption.
- When towing a trailer or agricultural equipment, the travelling speed of the lift truck is limited to 25 km/h. In this case, a "25" disc must be affixed to the rear of the convoy.

SAFETY INSTRUCTIONS

- Operators driving on the public highway must comply with current highway code legislation.
- The lift truck must comply with current road legislation. If necessary, there are optional solutions. Contact your dealer.

INSTRUCTIONS

- Make sure the revolving light is in place, switch it on and verify its operation.
- Make sure the lights, indicators and windscreen wipers are working properly.
- Switch off the working headlights if the lift truck is fitted with them.
- Select the steering mode "HIGHWAY TRAFFIC" (◁ 2 - DESCRIPTION: CONTROL AND COMMAND INSTRUMENTS) (according to model of lift truck).
- Fully retract the boom and set the attachment approximately 300 mm off the ground.
- Place the slope compensation in the central position, i.e. the transverse axis of the axles parallel to the frame (depending on the lift truck model).
- Fully raise the stabilisers and turn the shoes inwards (depending on the model of lift truck).

**⚠ IMPORTANT ⚠**

***Never coast in neutral (forward/reverse selector or gear lever in neutral or transmission cut-off button pressed) to preserve the lift truck engine brake.***
***Failure to observe this instruction on a slope will lead to excessive speed which may make the lift truck uncontrollable (steering, brakes) and cause serious mechanical damage.***

DRIVING THE LIFT TRUCK WITH A FRONT-MOUNTED ATTACHMENT

- You must comply with current regulations in your country, covering the possibility of driving on the public highway with a front-mounted attachment on your lift truck.
- If road legislation in your country authorizes circulation with a front-mounted attachment, you must at least:
  - Protect and report any sharp and/or dangerous edges on the attachment (◁ 4 - ADAPTABLE ATTACHMENTS AVAILABLE ON THE RANGE).
  - The attachment must not be loaded.
  - Make sure that the attachment does not mask the lighting range of the forward lights.
  - Make sure that current legislation in your country does not require other obligations.

OPERATING THE LIFT TRUCK WITH A TRAILER

- For using a trailer, observe the regulations in force in your country (maximum travel speed, braking, maximum weight of trailer, etc.).
- Do not forget to connect the trailer's electrical equipment to that of the lift truck.
- The trailer's braking system must comply with current legislation.
- If pulling a trailer with assisted braking, the tractor lift truck must be equipped with a trailer braking mechanism. In this case, do not forget to connect the trailer braking equipment to the lift truck.
- The vertical force on the towing hook must not exceed the maximum authorised by the manufacturer (consult the manufacturer's plate on your lift truck).
- The authorised gross vehicle weight must not exceed the maximum weight authorised by the manufacturer (◁ 2 - DESCRIPTION: CHARACTERISTICS).

**IF NECESSARY, CONSULT YOUR DEALER.**

https://truckmanualshub.com/

https://truckmanualshub.com/



## A - CHOICE OF ATTACHMENTS

- Only attachments approved by MANITOU can be used on its lift trucks.
- Make sure the attachment is suitable for the work to be done (◁ 4 - ADAPTABLE ATTACHMENTS AS OPTIONS ON THE RANGE).
- If the lift truck is equipped with the single side-shift carriage OPTION (TSDL), use only the authorised attachments (◁ 4 - ADAPTABLE ATTACHMENTS AS OPTIONS ON THE RANGE).
- Make sure the attachment is correctly installed and locked onto the lift truck carriage.
- Make sure that your lift truck attachments work properly.
- Comply with the load chart limits for the lift truck for the attachment used.
- Do not exceed the rated capacity of the attachment.
- Never lift a slung load without the attachment provided for the purpose, as there is a risk of the sling slipping (◁INSTRUCTIONS FOR HANDLING A LOAD: H - PICKING UP AND PUTTING DOWN A SUSPENDED LOAD).
- Do not handle loads suspended by straps directly on the forks (e.g.:big bags), as there is a risk of shearing on sharp edges. Use an attachment designed for this purpose.

## B - WEIGHT OF LOAD AND CENTRE OF GRAVITY

- Before picking up a load, you must know its mass and its centre of gravity.
- The longitudinal position of the centre of gravity in relation to the heel of the forks (Fig. B1) is defined on the load chart concerning your lift truck (◁ 2 - DESCRIPTION: DIMENSIONS AND LOAD CHARTS). For a higher centre of gravity consult your dealer.
- For irregular loads, determine the transverse centre of gravity before any handling (fig. B2) and place it in the longitudinal axis of the lift truck.

**⚠ IMPORTANT ⚠**

*It is forbidden to move a load heavier than the effective capacity defined on the lift truck load chart.*
*For loads with a moving centre of gravity (e.g. liquids), take account of the variations in the centre of gravity in order to determine the load to be handled and be extra vigilant and careful to limit these variations as far as possible.*

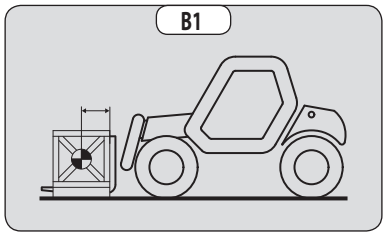


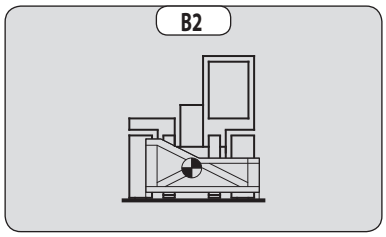


## C - LONGITUDINAL STABILITY INDICATOR

**⚠ IMPORTANT ⚠**

*Always watch this device during handling operations.*

- Letters and angle indicator (fig. C1) allow to read and respect load capacites of the lifttruck according to the load chart (see: 2 - DESCRIPTION: DIMENSION AND LOADCHART).
- When the device is in limit stability, it is forbidden to perform so-called «AGGRAVATING» movements, these being:
  - A - Extending the jib.
  - B - Lowering the jib.
- Perform movements to relieve aggravation in the following order (fig. C2): if necessary,raise the jib (1), retract the jib as far as possible (2) and lower the jib (3) to release theload.

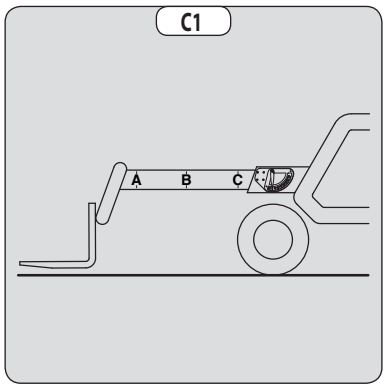


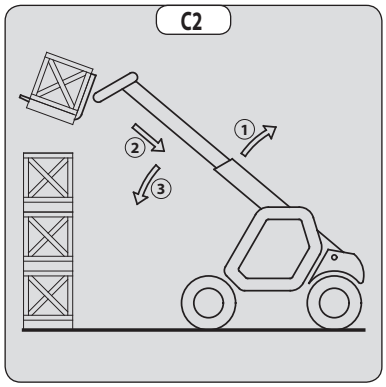

https://truckmanualshub.com/

## D - TRANSVERSE ATTITUDE OF THE LIFT TRUCK

Depending on the model of lift truck

The transverse attitude is the transverse slope of the chassis with respect to the horizontal. Raising the boom reduces the lift truck's lateral stability. The transverse attitude must be set with the boom in down position as follows:

1 - LIFT TRUCK WITHOUT LEVELLING USED ON TYRES

- Position the lift truck so that the spirit level bubble is between the two lines (◁ 2 - DESCRIPTION: COMMAND AND CONTROL INSTRUMENTS).

2 - LIFT TRUCK WITH LEVELLING USED ON TYRES

- Correct the tilt using the hydraulic control and check the horizontality with the spirit level. The bubble in the level must be between the two lines (◁ 2 - DESCRIPTION: COMMAND AND CONTROL INSTRUMENTS).

3 - LIFT TRUCK USED ON STABILISERS

- Put the two stabilisers on the ground and raise the two front wheels of the lift truck (fig. D1).
- Correct the tilt using the stabilisers (fig. D2) and check the horizontality with the spirit level. The bubble of the level must be between the two lines (◁ 2 - DESCRIPTION: COMMAND AND CONTROL INSTRUMENTS). In this position, the two front wheels must be off the ground.

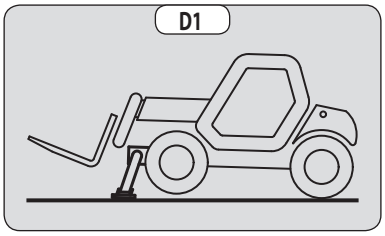


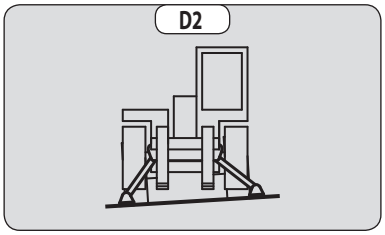


## E - PICKING UP A LOAD ON THE GROUND

- Approach the lift truck perpendicular to the load, with the boom retracted and the forks horizontal (fig. E1).
- Adjust the fork spacing and centring relative to the load to ensure stability (fig. E2) (optional solutions exist, consult your dealer).
- Never lift a load with a single fork.

**⚠ IMPORTANT ⚠**

*Beware of the risks of trapping or squashing limbs when manually adjusting the forks.*

- Move the lift truck forward slowly (1) and bring the forks up to the stop in front of the load (fig. E3). If necessary, slightly lift the boom (2) while picking up the load.
- Bring the load into the transport position.
- Tilt the load far enough backwards to ensure stability (loss of load on braking or going downhill).

FOR A NON-PALLETISED LOAD

- Tilt the carriage (1) forwards and move the lift truck slowly forwards (2), to insert the fork under the load (fig. E4) (chock the load if necessary).
- Continue to move the lift truck forwards (2) tilting the carriage (3) (fig. E4) backwards to place the load on the forks and ensure the load's longitudinal and lateral stability.

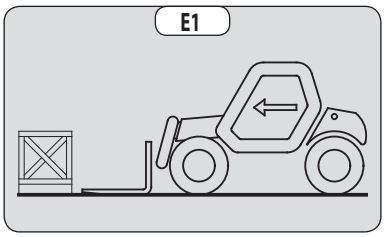


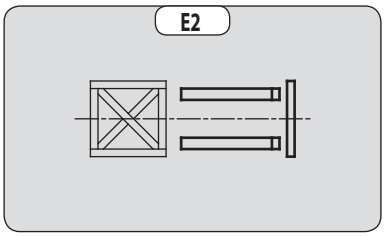


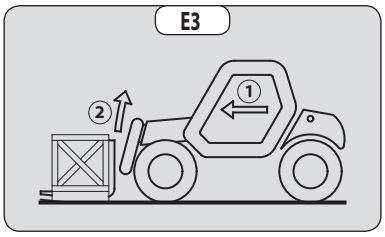


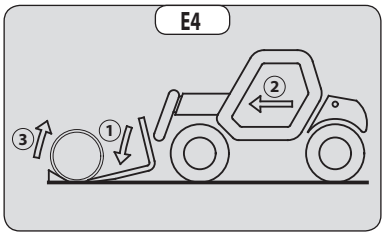

https://truckmanualshub.com/

## F - PICKING UP AND PUTTING DOWN A HIGH LOAD ON TYRES

**⚠ IMPORTANT ⚠**

*In no circumstances should you raise the boom if you have not checked the transverse attitude of the lift truck (◁ INSTRUCTIONS FOR HANDLING A LOAD: D - TRANSVERSE ATTITUDE OF THE LIFT TRUCK).*

REMINDER: Make sure that the following operations can be performed with good visibility (◁ OPERATING INSTRUCTIONS UNLADEN AND LADEN: D - VISIBILITY).

PICKING UP A HIGH LOAD ON TYRES

- Ensure that the forks will easily pass under the load.
- Raise and extend the boom (1) (2) until the forks are level with the load, moving the lift truck (3) forward if necessary (fig. F1), moving very slowly and carefully.
- Always remember to keep the distance necessary for inserting the forks under the load, between the stack and the lift truck (fig. F1) and use the shortest possible boom length.
- Bring the forks to the stop in front of the load by alternately extending and lowering the boom (1) or, if necessary, moving the lift truck forward (2) (fig. F2). Apply the parking brake and place the forward/reverse selector in neutral.
- Slightly raise the load (1) and tilt the carriage (2) backwards to stabilise the load (fig. F3).
- Tilt the load sufficiently backwards to ensure its stability.
- Monitor the longitudinal stability indicator (◁ INSTRUCTIONS FOR HANDLING A LOAD: C - LONGITUDINAL STABILITY INDICATOR). If it is overloaded, put the load back down in the place from which it was picked up.
- If possible lower the load without moving the lift truck. Raise the boom (1) to release the load, retract (2) and lower the boom (3) to put the load into transport position (fig. F4).
- If this is not possible, reverse the lift truck (1), manoeuvring very gently and carefully to release the load. Retract (2) and lower the boom (3) to bring the load into the transport position (fig. F5).

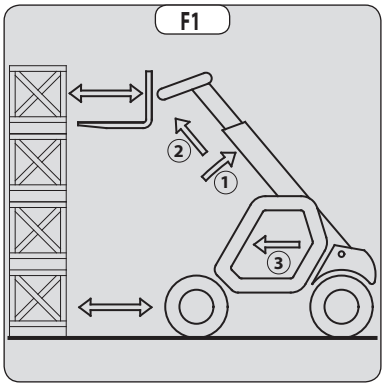


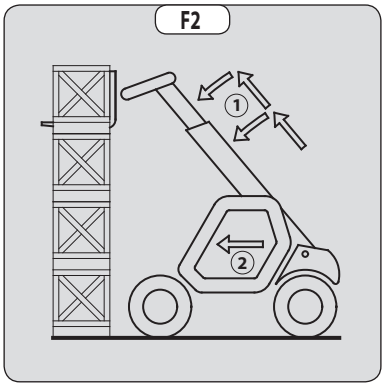


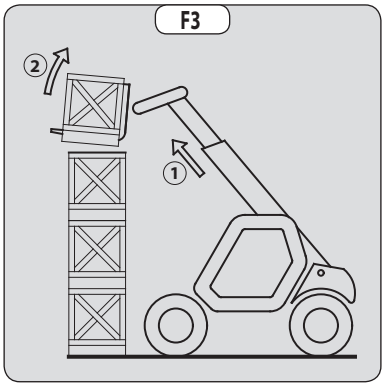


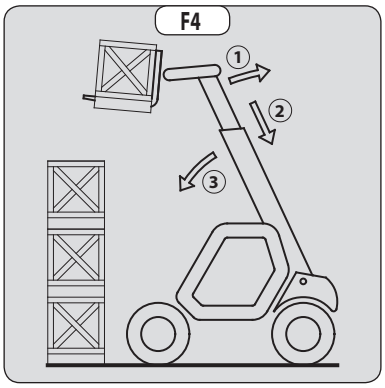


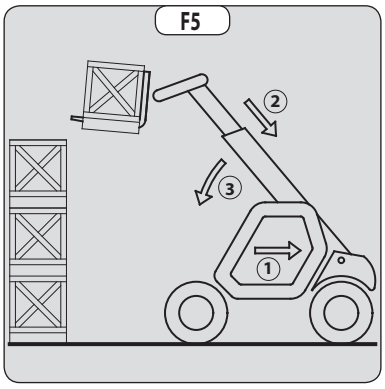

https://truckmanualshub.com/

PUTTING DOWN A HIGH LOAD ON TYRES

- Approach the load in the transport position in front of the stack (fig. F6).
- Apply the parking brake and place the forward/reverse selector in neutral.
- Raise and extend the boom (1) (2) until the load is above the stack, while monitoring the longitudinal stability indicator (◁ INSTRUCTIONS FOR HANDLING A LOAD: C - LONGITUDINAL STABILITY INDICATOR). If necessary, move the lift truck (3) forward (fig. F7), driving very slowly and carefully.
- Place the load in a horizontal position and put it down on the pile by lowering and retracting the boom (1) (2) in order to position the load correctly (fig. F8).
- If possible, release the forks by alternately retracting and raising the boom (1) (fig. F9). Then put the forks into transport position.
- If this is not possible, reverse the lift truck (1), manoeuvring very slowly and carefully to release the forks (fig. F10). Then put them into transport position.

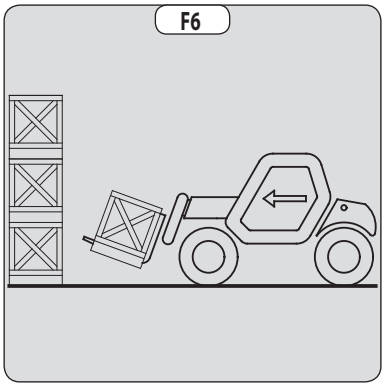


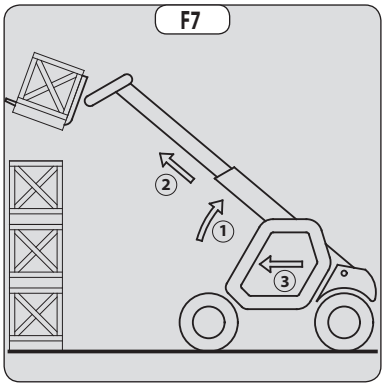


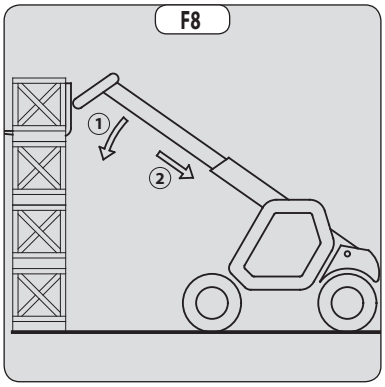


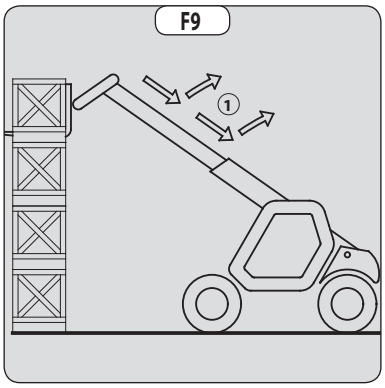


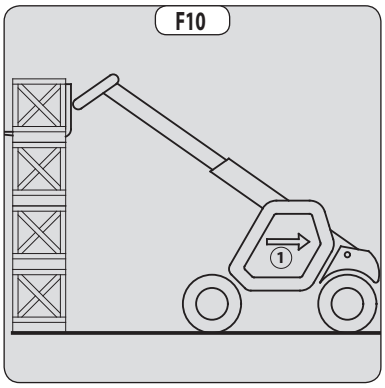

https://truckmanualshub.com/

## G - PICKING UP AND PUTTING DOWN A HIGH LOAD ON STABILISERS

Depending on the model of lift truck

**IMPORTANT**

*In no circumstances should you raise the boom if you have not checked the transverse attitude of the lift truck (◁ INSTRUCTIONS FOR HANDLING A LOAD: D - TRANSVERSE ATTITUDE OF THE LIFT TRUCK).*

REMINDER: Make sure that the following operations can be performed with good visibility (◁ OPERATING INSTRUCTIONS UNLADEN AND LADEN: D - VISIBILITY).

The stabilisers are used to optimise the lift truck's lifting performance (◁ 2 - DESCRIPTION: COMMAND AND CONTROL INSTRUMENTS).

POSITIONING THE STABILISERS WITH THE FORKS IN TRANSPORT POSITION (UNLADEN AND LADEN)

- Set the forks in transport position in front of the elevation.
- Stay far enough away to allow the boom to be raised.
- Apply the parking brake and place the forward/reverse selector in neutral.
- Put the two stabilisers on the ground and lift the two front wheels of the lift truck (fig. G1), making sure the lift truck has transverse attitude.

RAISING THE STABILISERS WITH THE FORKS IN TRANSPORT POSITION (UNLADEN AND LADEN)

- Raise both stabilizers fully and at the same time.

LOWERING THE STABILISERS WITH BOOM UP (UNLADEN AND LADEN)

**IMPORTANT**

*This operation must be exceptional and performed with great care.*

- Raise the boom and retract the telescopes completely.
- Bring the lift truck into position in front of the elevation (fig. G2) moving very slowly and carefully.
- Apply the parking brake and place the forward/reverse selector in neutral.
- Move the stabilizers very slowly and gradually as soon as they are close to the ground or in contact with it.
- Lower the two stabilisers and lift the two front wheels of the lift truck (fig. G3). During this operation, transverse attitude must be permanently maintained: the bubble in the level must be kept between the two lines.

SETTING THE STABILISERS WITH THE BOOM UP (UNLADEN AND LADEN)

**IMPORTANT**

*This operation must be exceptional and performed with great care.*

- Keep the boom raised and retract the telescopes completely (fig. G3).
- Move the stabilisers very slowly and gradually as soon as they are in contact with the ground and when they leave the ground. During this operation, the transverse attitude must be permanently maintained: the bubble in the level must be kept between the two lines.
- Raise both stabilizers completely.
- Release the parking brake and reverse the lift truck (1) very slowly and carefully, to release it and lower the forks (2) into transport position (fig. G4).

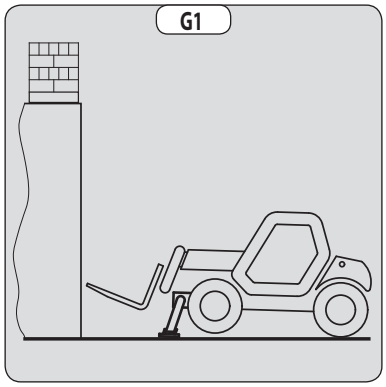


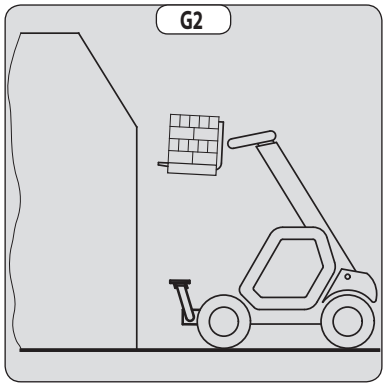


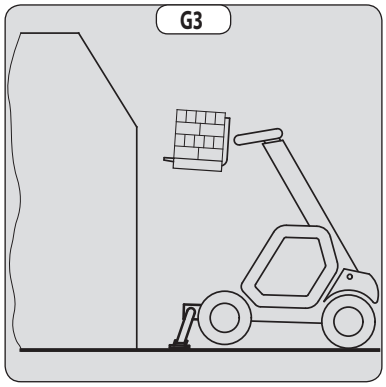


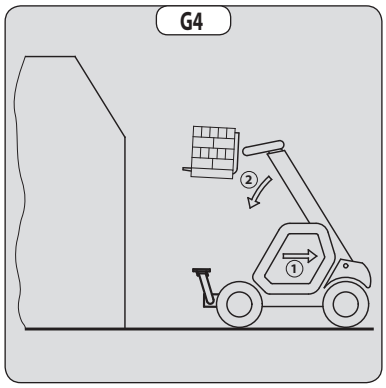

https://truckmanualshub.com/

TAKING UP A HIGH LOAD ON STABILISERS

- Ensure that the forks will easily pass under the load.
- Check the position of the lift truck with respect to the load and make a test run, if necessary, without taking the load.
- Raise and extend the boom (1) (2) until the forks are at the level of the load (fig. G5).
- Bring the forks to the stop in front of the load by alternately extending and lowering the boom (1) (fig. G6).
- Lift the load slightly (1) and tilt the carriage (2) backwards to stabilise the load (fig. G7).
- Monitor the longitudinal stability indicator (◁ INSTRUCTIONS FOR HANDLING A LOAD: C - LONGITUDINAL STABILITY INDICATOR). If it is overloaded, put the load back down in the place from which it was picked up.
- If possible lower the load without moving the lift truck. Raise the boom (1) to release the load, retract (2) and lower the boom (3) to put the load into transport position (fig. F4).

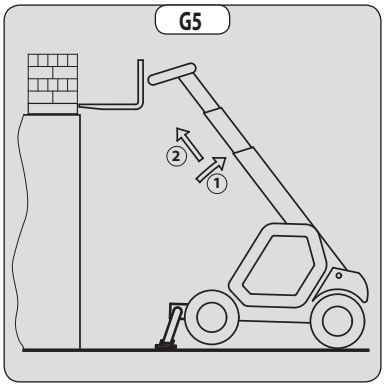


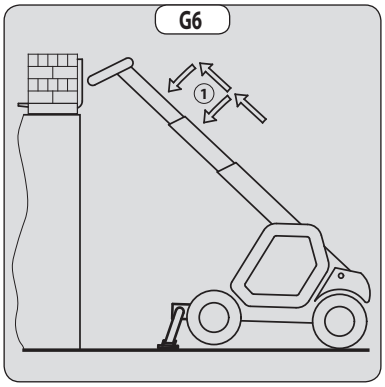


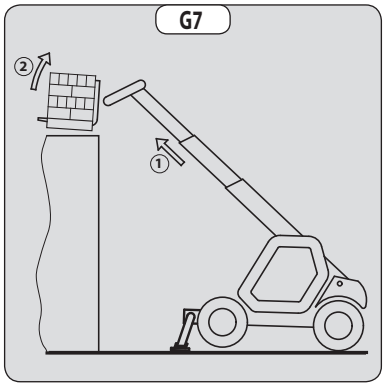


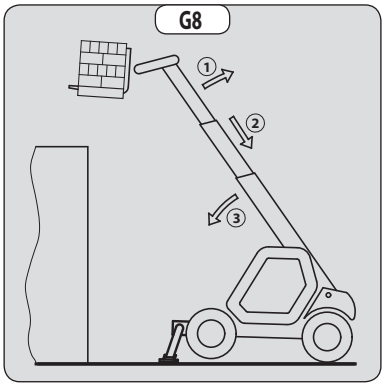


SETTING DOWN A HIGH LOAD ON STABILISERS

- Raise and extend the boom (1) (2) until the load is above the elevation (fig. G9), while monitoring the longitudinal stability indicator (◁ INSTRUCTIONS FOR HANDLING A LOAD: C - LONGITUDINAL STABILITY INDICATOR).
- Position the load horizontally and release it by lowering and retracting the boom (1) (2) to position the load correctly (fig. G10).
- Free the forks by alternately retracting and raising the boom (3) (fig. G11).
- If possible, putt the boom in transport position without moving the lift truck.

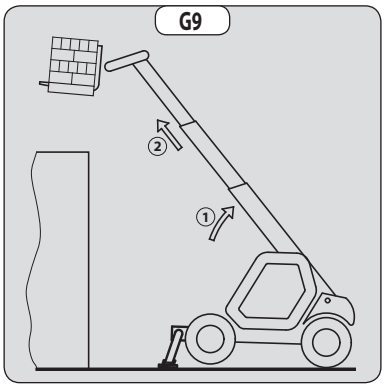


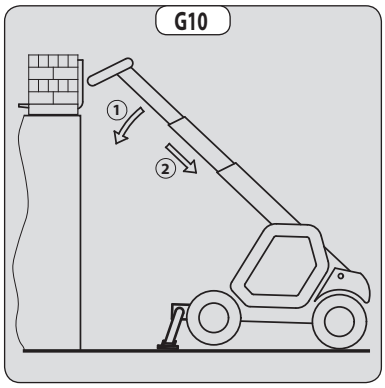


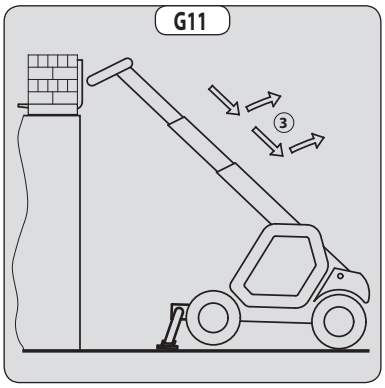

https://truckmanualshub.com/

## H - PICKING UP AND PUTTING DOWN A SUSPENDED LOAD

**⚠ IMPORTANT ⚠**

***Failure to follow the above instructions may lead the lift truck to loose stability and overturn.***
***MUST be used with a lift truck equipped with an operational hydraulic movement cut-out device.***

CONDITIONS OF USE

- The length of the sling or the chain shall be as short as possible to limit swinging of the load.
- Lift the load vertically along its axis, never by pulling sideways or lengthways.

HANDLING WITHOUT MOVING THE LIFT TRUCK

- Whether on stabilisers or on tyres, the lateral attitude must not exceed 1% and the longitudinal attitude must not exceed 5%, the bubble of the level must be kept at "0".
- Ensure that the wind speed is not higher than 10 m/s.
- Ensure that there is no one between the load and the lift truck.

## I - TRAVELLING WITH A SUSPENDED LOAD

- Before moving, inspect the terrain in order to avoid excessive slopes and cross-falls, bumps and potholes, or soft ground.
- Ensure that the wind speed is not higher than 36 km/h.
- The lift truck must not travel at more than 0.4 m/s (1.5 km/h, i.e. one quarter walking speed).
- Drive and stop the lift truck gently and smoothly to minimise swinging of the load.
- Carry the load a few centimetres above the ground (max. 30 cm) the shortest possible boom length. Do not exceed the offset indicated on the load chart. If the load begins to swing excessively, do not hesitate to stop and lower the boom to set down the load.
- During transport, the lift truck operator must be assisted by a person on the ground (standing a minimum of 3 m from the load), who will limit swinging of the load using a bar or a rope. Ensure that this person is always clearly in view.
- The lateral attitude must not exceed 5%, the bubble in the level must be kept between the two "MAX" marks.
- The longitudinal attitude must not exceed 15% with the load facing uphill, and 10% with the load facing downhill.
- The boom angle must not exceed 45°.

https://truckmanualshub.com/

## INSTRUCTIONS FOR USE AS A LOADER

For agricultural-type lift trucks (MLT range)

### A - LOADING

**IMPORTANT**

*In no circumstances should you raise the boom if you have not checked the transverse attitude of the lift truck (◁ INSTRUCTIONS FOR HANDLING A LOAD: D - TRANSVERSE ATTITUDE OF THE LIFT TRUCK).*

REMINDER: Make sure that the following operations can be performed with good visibility (◁ OPERATING INSTRUCTIONS UNLADEN AND LADEN: D - VISIBILITY).

FILLING THE BUCKET

- Place the bottom of the bucket in a horizontal position, just in contact with the ground (1) (fig. A1).
- Move forward gradually (2) while simultaneously raising the boom and tilting the bucket backwards (3), for improved filling and breakout (fig. A1).
- Reverse the lift truck (1) very carefully and gently to free the bucket. Lower the boom (2) into the transport position (fig. A2).

**IMPORTANT**

*Tilt the bucket sufficiently back to avoid spilling product and ensure its stability (loss of product under braking).*

LOADING A TRAILER

- Approach the side of the trailer in the transport position (fig. A3).
- Raise and extend the boom (1) (2) until the bucket is above the trailer, while monitoring the longitudinal stability indicator (◁ INSTRUCTIONS FOR HANDLING A LOAD: C - LONGITUDINAL STABILITY INDICATOR) (fig. A4).
- Drive the lift truck forward (3) very carefully and gently so that the bucket empties its load in the centre of the trailer (fig. A4).
- Apply the parking brake on and set the reversing lever to neutral.
- Slowly discharge the product (4) (fig. A4).
- Tilt the bucket backwards (1) and reverse the lift truck (2) very carefully and gently (fig. A5).
- Retract (3) and lower the boom (4) into the transport position (fig. A5).

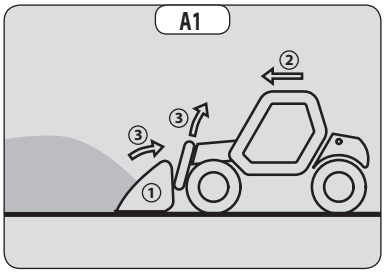


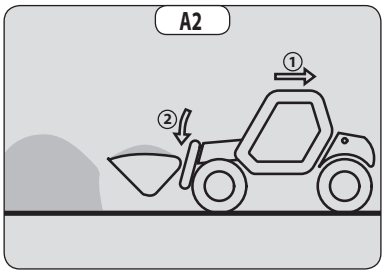


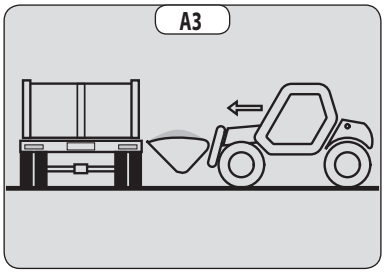


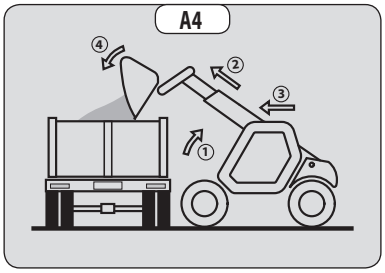


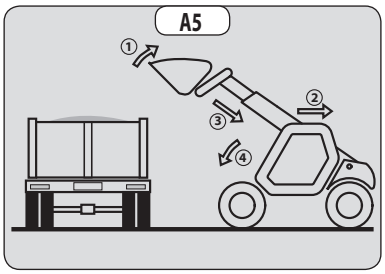


### B - BACKFILLING

- Place the bottom of the bucket in a horizontal position, just in contact with the ground (1) (fig. B1).
- Drive forward gradually (2). Once filled, the bucket will act as a levelling blade (fig. B1).

**IMPORTANT**

*When driving, beware of trenches as well as recently excavated and/or backfilled ground.*

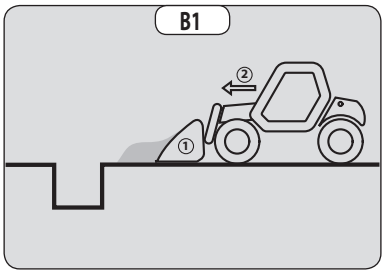

https://truckmanualshub.com/



**A - AUTHORISATION FOR USE**

- Operation of the platform requires further authorisation in addition to that of the lift truck.

**B - SUITABILITY OF THE PLATFORM FOR THE JOB**

- Our lift trucks fitted with "mobile elevating work platforms" are compliant with the standard **EN 280:2013+A1** for Europe and the standard **AS/NZS 1418.10:2011** for Australia, corresponding to the classification of Group C1 to C3 complying with this standard.
- MANITOU has ensured that this platform is suitable for use under the normal operating conditions provided in this operator's manual, with a **STATIC test coefficient of 1.25** and a **DYNAMIC test coefficient of 1.1** as specified in harmonised European standard **EN 280:2013+A1** for "mobile elevating work platforms".
- Before commissioning, the company manager must make sure that platform is appropriate for the work to be done, and perform certain tests (in accordance with current legislation).

**C - PROVIDED ON THE PLATFORM**

- Wear suitable clothing when using the platform, avoid loosely-fitting garments.
- Never operate the platform when hands or feet are wet or soiled with greasy substances.
- Remain alert at all times when using the platform. Do not listen to the radio or music using headphones or earphones.
- For increased comfort, adopt the correct position at the platform's operator station.
- The platform's guard rail exempts the operator from wearing a safety harness under normal operating conditions. As a result, you are responsible for deciding whether to wear a safety harness.

NOTE:Make sure that current legislation in your country does not include the obligation to wear a harness.

- The control units must never in any event be used for any other than their intended purposes (e.g. climbing onto or down from the lift truck, portmanteau, etc.).
- Safety helmets must be worn.
- The operator must always be in the normal operator's position. It is prohibited to have arms or legs, or generally any part of the body, protruding from the basket.
- Ensure that any materials loaded onto the platform (pipes, cables, containers, etc.) cannot fall out. Do not pile these materials to the point where it is necessary to step over them.

**D - USING THE PLATFORM**

- However experienced they may be, operators must acquaint themselves with the emplacement and operation of all control instruments prior to operating the platform.
- Check before use that the platform has been correctly assembled and locked onto the lift truck.
- Check before operating the platform that the access gate has been properly locked.
- The platform should be operated in an area free of any obstructions or danger when it is lowered to the ground.
- The operator using the platform must be aided on the ground by a person with adequate training.
- You should stay within the limits set out in the platform load chart.
- The lateral constraints are limited (◁ 2 - DESCRIPTION: CHARACTERISTICS).
- It is strictly forbidden to suspend a load from the platform or the lift truck boom without an attachment provided for this (◁ INSTRUCTIONS FOR HANDLING A LOAD: H - PICKING UP AND PUTTING DOWN A SUSPENDED LOAD).
- The platform cannot be used as a crane or a lift for permanently transporting people or materials, nor as jacks or supports.
- The lift truck must not be moved with one (or more) person(s) in the platform.
- It is forbidden to transport people on the platform using the hydraulic controls in the lift truck's driver's cab (except in case of rescue).
- The operator must not climb onto to off the platform when it is not on ground level (boom retracted and in the down position).
- The platform must not be fitted with attachments that increase the unit's wind load.
- Do not use ladders or improvised structures in the platform to gain extra height.
- Do not climb onto the sides of the platform to gain extra height.
- It is forbidden to use the platform on forks. The fork slots are only to, be used for storing the platform and not for lifting people under any circumstances.

https://truckmanualshub.com/

## E - ENVIRONMENT

**⚠ IMPORTANT ⚠**

*It is forbidden to use the platform close to electricity cables. Maintain the specified safe distances.*

| RATED VOLTAGE | SAFETY DISTANCE (METRES) |
|---|---|
| 50 < U < 1,000 | 2,30 M |
| 1,000 < U < 30,000 | 2,50 M |
| 30000 < U < 45000 | 2,60 M |
| 45000 < U < 63000 | 2,80 M |
| 63000 < U < 90000 | 3,00 M |
| 90000 < U < 150000 | 3,40 M |
| 150000 < U < 225000 | 4,00 M |
| 225000 < U < 400000 | 5,30 M |
| 400000 < U < 750000 | 7,90 M |

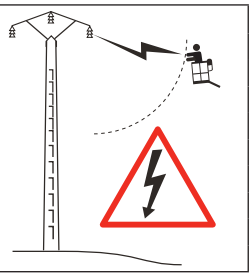

**⚠ IMPORTANT ⚠**

*It is strictly forbidden to use the platform when the wind speed exceeds 45 km/h.*

- To visually recognise this wind speed, refer to the empirical wind evaluation scale below:

| BEAUFORT scale (wind speed at a height of 10 m on a flat site) | | | | | | |
|---|---|---|---|---|---|---|
| **Force** | **Type of wind** | **Speed (knots)** | **Speed (km/h)** | **Speed (m/s)** | **Effects on Land** | **Sea conditions** |
| **0** | Calm | **0 - 1** | **0 - 1** | **<0.3** | Smoke rises vertically. | Sea is like a mirror. |
| **1** | Light air | **1 - 3** | **1 - 5** | **0.3 - 1.5** | Smoke indicates direction of wind. | Ripples with appearance of scale, no foam crests. |
| **2** | Light breeze | **4 - 6** | **6 - 11** | **1.6 - 3.3** | Wind felt on face, leaves rustle. | Short wavelets, but pronounced. |
| **3** | Gentle breeze | **7 - 10** | **12 - 19** | **3.4 - 5.4** | Leaves and small twigs in constant motion. | Very small waves, crests begin to break. |
| **4** | Moderate breeze | **11 - 16** | **20 - 28** | **5.5 - 7.9** | Wind raises dust and loose pieces of paper; small branches are moved. | Small waves, becoming longer, numerous whitecaps. |
| **5** | Fresh breeze | **17 - 21** | **29 - 38** | **8 - 10.7** | Small tees in leaf begin to sway. | Wavelets form on inland waters; moderate waves, taking longer form. |
| **6** | Strong breeze | **22 - 27** | **39 - 49** | **10.8 - 13.8** | Large branches in motion, whistling heard in overhead wires, umbrella use becomes difficult. | Larger waves forming, whitecaps everywhere, some spray. |
| **7** | Near gale | **28 - 33** | **50 - 61** | **13.9 - 17.1** | Whole trees in motion, inconvenience felt when walking against the wind. | Sea heaps up; white foam from breaking waves begins to be blown in streaks along the direction of the wind. |
| **8** | Gale | **34 - 40** | **62 - 74** | **17.2 - 20.7** | Wind breaks twigs off trees; impedes progress. | Moderately high waves of greater length; edges of crests begin to break into spindrift. |
| **9** | Strong gale | **41 - 47** | **75 - 88** | **20.8 - 24.4** | Wind damages roofs (chimneys, slates, etc.). | High waves, crests of waves begin to topple, streaks of foam; reduced visibility. |
| **10** | Storm | **48 - 55** | **89 - 102** | **24.5 - 28.4** | Seldom experienced inland; trees uprooted; considerable structural damage occurs. | Very high waves; white streaks of foam; reduced visibility. |
| **11** | Violent storm | **56 - 63** | **103 - 117** | **28.5 - 32.6** | Very rare, widespread damage. | Exceptionally high waves able to hide medium sized ships from view, reduced visibility. |
| **12** | Hurricane | **64 +** | **118 +** | **32.7 +** | Devastating damage. | Sea completely white; air filled with foam and spray, very reduced visibility. |

## F - MAINTENANCE

**⚠ IMPORTANT ⚠**

*Your platform must be periodically inspected to ensure its continued compliance.*
*The inspection frequency is defined by the legislation applying in the country in which the platform is used.*
*In France, a general periodic inspection every 6 months (Decree of 1 March 2004).*

https://truckmanualshub.com/



## HOW TO USE THE RADIO-CONTROL

SAFETY INSTRUCTIONS

- This radio-control consists of electronic and mechanical safety elements. It cannot receive commands from another transmitter because the internal encoding is unique to each radio-control.

**⚠ IMPORTANT ⚠**

*If it is used improperly or incorrectly, there is a risk of danger to:*
*- The physical and mental health of the user or others.*
*- The lift truck and other neighbouring items.*
*All those working with this radio-control:*
*- Must be qualified in line with current regulations and trained accordingly.*
*- Must follow this instruction manual as closely as possible.*

- The system is used to control the lift truck remotely via radio waves. Commands are also transmitted if the lift truck is out of sight (behind an obstacle or a building for example), this is why:
  - After stopping the truck and removing the key switch (only possible when it is stationary), always place the transmitter in a safe, dry place.
  - Before performing any installation, servicing or repair work, always switch off power sources (in particular, electric welding devices and electric head units on hydraulic distributors must be disconnected at each section).
  - Never remove or alter the safety devices (such as the hand-guard frame, key, emergency stop button, etc.).

**⚠ IMPORTANT ⚠**

*Never drive the lift truck if it is not continuously and perfectly within view of the operator!*

- Before leaving the transmitter, the operator must make sure that it cannot be used by an unauthorized third person: either by removing the key button from the transmitter or locking it in an inaccessible place.
- The user must ensure that the instruction manual is accessible at all times and that operators have read and understood it.

INSTRUCTIONS

- Take up position in a stable place with no risk of slipping.
- Before using the transmitter, make sure there is nobody within the working area.
- Only use the transmitter with its carrying device or installed correctly on the platform.

**⚠ IMPORTANT ⚠**

*When you remove the transmitter, remove the accumulator and key button so that it cannot be used accidentally or deliberately by anyone else.*

## PROTECTIVE DEVICES

- The lift truck will be immobilised within a maximum of 450 milliseconds (approx. 0.5 second):
  - If the emergency stop button of the transmitter is pressed (50 milliseconds), or that of the lift truck.
  - If the transmission distance of the radio waves is exceeded.
  - If the transmitter is faulty.
  - If an interfering radio signal is received from elsewhere.
  - If the accumulator is removed from its housing in the transmitter.
  - If the battery reaches the end of its autonomy.
  - If the transmitter is switched off by turning the key switch to the off position.
- These protective devices are provided for the safety of personnel and property and must never be modified, removed or bypassed in any way whatsoever!
- The hand-guard frame prevents external action on a manipulator (e.g. if the transmitter is dropped, or if the operator leans on a guard-rail).
- An electronic safety device prevents radio transmission from being initiated if the manipulators are not mechanically and electrically at rest and if the internal combustion engine speed selector is not set to idle.

**⚠ IMPORTANT ⚠**

*In an emergency, press the transmitter emergency stop button immediately; then follow the manual's instructions (◁ 2 - DESCRIPTION: COMMAND AND CONTROL INSTRUMENTS).*

https://truckmanualshub.com/

https://truckmanualshub.com/



## GENERAL INSTRUCTIONS

- Ensure the area is sufficiently ventilated before starting the lift truck.
- Wear clothes suitable for the maintenance of the lift truck, avoid wearing jewellery and loose clothes. Tie back and protect your hair, if necessary.
- Stop the engine and remove the ignition key, when an intervention is necessary.
- Read the operator's manual carefully.
- Carry out all repairs immediately, even if the repairs concerned are minor.
- Repair all leaks immediately, even if the leak concerned is minor.
- Ensure that process materials and of spare parts are disposed in all safely and in an ecological manner.
- Be careful of the risk of burns and splashing (exhaust, radiator, engine, etc.).

## PLACING THE BOOM SAFETY WEDGE

- The lift truck is equipped with a boom safety wedge (◁ 2 - DESCRIPTION: COMMAND AND CONTROL INSTRUMENTS) that must be installed on the rod of the lifting cylinder when working beneath the boom.

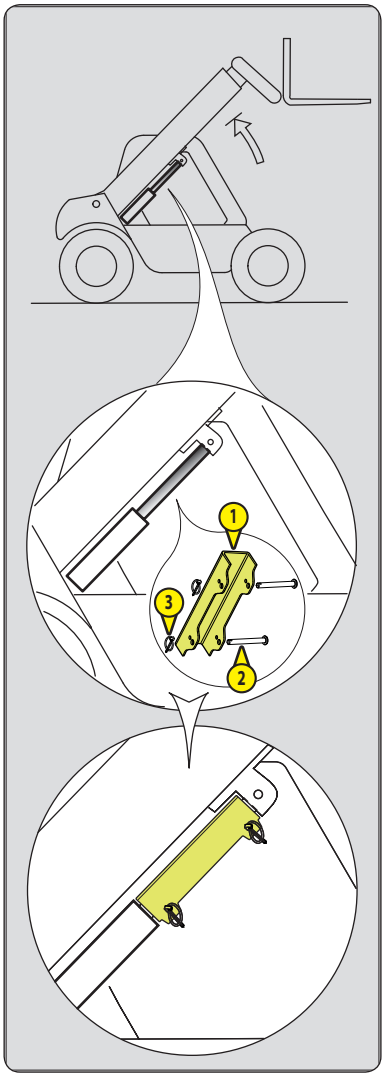


### FITTING THE WEDGE

- Fully raise the boom.
- Place the safety wedge 1 on the rod of the lifting cylinder and secure with the rod 2 and the pin 3.
- Slowly lower the boom then stop the hydraulic movements before it comes into contact with the wedge.

### REMOVING THE WEDGE

- Fully raise the boom.
- Remove the pin and the rod.
- Return the safety wedge to the storage location provided on the lift truck.

**⚠ IMPORTANT ⚠**

*Only use the wedge supplied with the lift truck.*

## MAINTENANCE

- Perform the periodic service (◁ 3 - MAINTENANCE) to keep your lift truck in good working condition. Failure to perform the periodic service may cancel the contractual guarantee.

### MAINTENANCE LOGBOOK

- The maintenance operations carried out in accordance with the recommendations given in Part: 3 - MAINTENANCE and the other inspection, servicing or repair operations or modifications performed on the lift truck or its attachments are recorded in a maintenance logbook. The entry for each operation should include the date of the work, the names of the individuals or companies having performed them, the type of operation and its frequency, if applicable. The part numbers of any lift truck components that are replaced are indicated.

https://truckmanualshub.com/

## LUBRICANT AND FUEL LEVELS

- Use the recommended lubricants (never use contaminated lubricants).
- Do not fill the fuel tank when the engine is running.
- Only fill up the fuel tank in areas specified for this purpose.
- Do not fill the fuel tank to the maximum level.
- Do not smoke or approach the lift truck with a flame, when the fuel tank is open or is being filled.

## HYDRAULICS

- Any work on the load handling hydraulic circuit is forbidden except for the operations described in Part: 3 - MAINTENANCE.
- Do not attempt to loosen connections, hoses or a hydraulic component with the circuit under pressure.

**⚠ IMPORTANT ⚠**

*BALANCING VALVE: It is dangerous to change the setting and remove the balancing valves or safety valves which may be fitted to your lift truck cylinders.*
*The HYDRAULIC ACCUMULATORS that may be fitted on your lift truck are pressurised units. Removing these accumulators and their pipework is a dangerous operation and must only be performed by approved personnel (consult your dealer).*
*These operations must only be performed by approved personnel (consult your dealer).*

## ELECTRICITY

- Do not short-circuit the starter relay to start the engine. If the forward/reverse selector is not in neutral and the parking brake is not applied, the lift truck may suddenly start to move.
- Do not place metal items on the battery.
- Disconnect the battery before working on the electrical circuit.

## WELDING

- Disconnect the battery before any welding operations on the lift truck.
- When carrying out electric welding work on the lift truck, connect the negative cable from the equipment directly to the part being welded, so as to avoid high tension current passing through the alternator.
- Never carry out welding or work which gives off heat on an assembled tyre. The heat would increase the pressure which could cause the tyre to explode.
- If the lift truck is equipped with an electronic control unit, disconnect this before starting to weld, to avoid the risk of causing irreparable damage to electronic components.

## WASHING THE LIFT TRUCK

- Clean the lift truck or at least the area concerned before any intervention.
- Remember to close and lock all accesses to the lift truck (doors, windows, cowls…).
- During washing, avoid the articulations and electrical components and connections.
- If necessary, protect against penetration of water, steam or cleaning agents, components susceptible of being damaged, particularly electrical components and connections and the injection pump.
- Clean the lift truck of any fuel, oil or grease trace.

## TRANSPORTING THE LIFT TRUCK

**⚠ IMPORTANT ⚠**

*Transporting the lift truck involves real risks for the operator and others involved.*

- Towing, winching, slinging or transporting the lift truck (◁ 3 - MAINTENANCE).

https://truckmanualshub.com/

# IF THE LIFT TRUCK IS NOT TO BE USED FOR A LONG TIME

## INTRODUCTION

The following recommendations are intended to prevent the lift truck from being damaged when it is withdrawn from service for an extended period.

**⚠ IMPORTANT ⚠**

*Procedures to follow if the lift truck is not to be used for a long time and for starting it up again afterwards must be performed by your dealership.*
*This period of long-term stoppage must not exceed 12 months.*
*After 12 months, repeat the procedures for putting the lift truck back into service and long-term stoppage.*

## PREPARING THE LIFT TRUCK

- Clean the lift truck thoroughly.
- Check and repair any fuel, oil, water or air leaks.
- Replace or repair any worn or damaged parts.
- Wash the painted surfaces of the lift truck in clear and cold water and wipe them.
- Touch up the paintwork if necessary.
- Stop the lift truck (◁ OPERATING INSTRUCTIONS UNLADEN AND LADEN).
- Make sure the boom cylinder rods are all in the retracted position.
- Release the pressure in the hydraulic circuits.

## DEF (Diesel Exhaust Fluid) TANK

Depending on the model of lift truck

- Drain and rinse the DEF tank.
- Replace the "DEF" (Diesel Exhaust Fluid) supply pump filter (◁ 3 - MAINTENANCE).
- Slowly fill the tank with new "DEF" (Diesel Exhaust Fluid) up to the bottom of the filler neck.
- Start up the lift truck to pressurise the circuit and bring it up to working temperature, then shut down the engine.
- If necessary, top up the tank.

## PROTECTING THE ENGINE

- Contact your dealer to obtain the procedure for protecting the inside of the engine (use of protection product).
- Fill the tank with fuel (◁ 3 - MAINTENANCE).
- Drain and replace the coolant (◁ 3 - MAINTENANCE).
- Leave the engine running at idling speed for a few minutes, then switch off.
- Replace the engine oil and oil filter (◁ 3 - MAINTENANCE).
- Run the engine for a short time so that the oil and cooling liquid circulate inside.
- Disconnect the battery and store it in a safe place away from the cold, after charging it to a maximum.
- Block the outlet with waterproof adhesive tape.
- Remove the drive belts and store them in a safe place.
- Disconnect the engine cut-off solenoid on the injection pump and carefully insulate the connection.

## PROTECTING THE LIFT TRUCK

- Set the lift truck on axle stands so that the tyres are off the ground.
- Release the parking brake (depending on the model of lift truck).
- Protect cylinder rods which will not be retracted, from corrosion.
- Wrap the tyres.

NOTE: If the lift truck is to be stored outdoors, cover it with a waterproof tarpaulin.

https://truckmanualshub.com/

## BRINGING THE LIFT TRUCK BACK INTO SERVICE

- Remove the waterproof adhesive tape from all the holes.
- Refit and reconnect the battery.
- Remove the protection from the cylinder rods.
- Perform the daily maintenance operations (◁ 3 - MAINTENANCE).
- Put the handbrake on and remove the axle stands.
- Drain and clean the fuel tank (◁ 3 - MAINTENANCE).
- Fill the fuel tank with clean diesel filtered through the filler port.
- Replace the fuel filter (◁ 3 - MAINTENANCE).
- Replace the fuel pre-filter (◁ 3 - MAINTENANCE) **(depending on the model of lift truck)**.
- Drain and rinse the DEF tank **(depending on the model of lift truck)**.
- Top up, slowly fill the tank with new "DEF" (Diesel Exhaust Fluid) up to the bottom of the filler neck **(depending on the model of lift truck)**.
- Refit the drive belts and adjust the tension (◁ 3 - MAINTENANCE).
- Turn the engine over with the starter, to allow the oil pressure to rise.
- Reconnect the engine cut-off solenoid.
- Lubricate the lift truck completely (◁ 3 - MAINTENANCE).

**⚠ IMPORTANT ⚠**

***Ensure the area is sufficiently ventilated before starting the lift truck.***

- Start up the lift truck, following the safety instructions and regulations (◁ OPERATING INSTRUCTIONS UNLADEN AND LADEN).
- Carry out all the boom hydraulic movements, concentrating on the ends of travel for each cylinder.

https://truckmanualshub.com/

# LIFT TRUCK DISPOSAL

**IMPORTANT**

*Please consult your dealer before disposing of your lift truck.*

## RECYCLING OF MATERIALS

**METALS**

- Metals are 100 % recoverable and recyclable.

**PLASTICS**

- Plastic parts are identified with a marking in accordance with current regulations.
- A limited range of materials is used to simplify the recycling process.
- The majority of plastic components are made of "thermoplastic" plastics, that are easily recycled by melting, granulating or grinding.

**RUBBER**

- Tyres and seals can be ground for use in cement manufacture or to obtain reusable granules.

**GLASS**

- Glass items can be removed and collected for processing by glaziers.

## ENVIRONMENTAL PROTECTION

By entrusting the maintenance of your lift truck to the MANITOU network, the risk of pollution is limited and the contribution to environmental protection contribution is made.

**WORN OR DAMAGED PARTS**

- Do not dump them in the countryside.
- MANITOU and its network have signed-up to a scheme of environmental protection through recycling.

**USED OIL**

- The MANITOU network organises the collection and processing of used oil.
- By handing over your waste oil to MANITOU, the risk of pollution is limited.

**USED BATTERIES**

- Do not throw away batteries, as they contain metals that are harmful for the environment.
- Return them to the MANITOU network or any other approved collection point.

NOTE: MANITOU seeks to manufacture lift trucks providing the best performance and limiting polluting emissions.

https://truckmanualshub.com/

# 2 - DESCRIPTION

https://truckmanualshub.com/

https://truckmanualshub.com/

# 2 - DESCRIPTION


SAFETY PLATES AND STICKERS 2-4

IDENTIFICATION OF THE LIFT TRUCK 2-8

CHARACTERISTICS 2-10

TYRES 2-12

DIMENSIONS AND LOAD CHARTS 2-14

VISIBILITY 2-16

INSTRUMENTS AND CONTROLS 2-18

TOWING DEVICE 2-40

DESCRIPTION AND USE OF THE OPTIONS 2-42

https://truckmanualshub.com/

# SAFETY PLATES AND STICKERS

**⚠ IMPORTANT ⚠**

*Clean all stickers and safety plates so that they are legible.*
*Any safety plates and stickers which are illegible or damaged must be replaced.*
*Check that stickers and safety plates are present after replacing any spare parts.*

## EXTERNAL PLATES AND STICKERS

| REF. | PART NO. | DESCRIPTION |
|---|---|---|
| 1 | 234805 | - Hydraulic coupling instruction MT 625 H COMFORT 75K ST5 |
| 2 | 296998 | - Maniscopic safety instruction |
| 3 | 24653 | - Slinging point |
| 4 | 52563320 | - Tie-down point |
| 5 | 234798 | - Hydraulic oil |
| 6 | 288430 | - Repairing instructions (on lift cylinder) |
| 7 | 268491 | - Brake fluid instruction |
| 8 | 305405 | - Diesel fuel |
| 9 | 289013 | - Towing instruction (OPTION) |
| 10 | 307508 | - Battery cut-off instruction |
| 11 | 52631112 | - Overall height (OPTION) |
| 12 | 52588611 | - Attachment and boom safety |
| 13 | 52590031 | - Attachment retaining shaft |

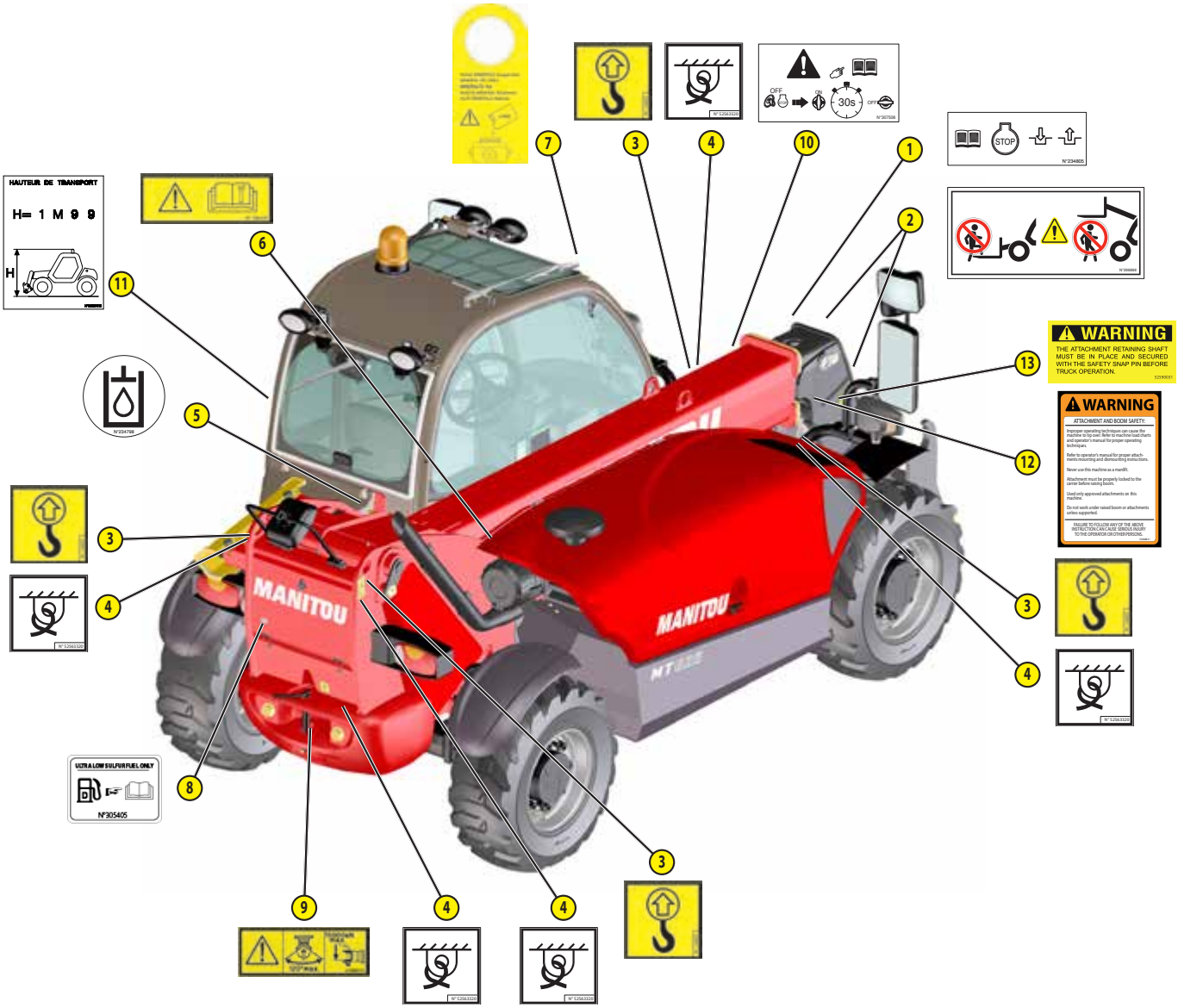

https://truckmanualshub.com/

## STICKERS AND PLATES UNDER THE ENGINE HOOD

| REF. | PART NO. | DESCRIPTION |
|---|---|---|
| 1 | 244130 | - Preheat rod (OPTION) |
| 2 | 52506370 | - Fuses |
| 3 | 259398 | - Water/diesel separator |
| 4 | 52515083 | - Anti-freeze |
| 5 | 234797 | - Air conditioning (OPTION) MT 625 H COMFORT 75K ST5 |
| 6 | 52589959 | - Rotating fan safety |

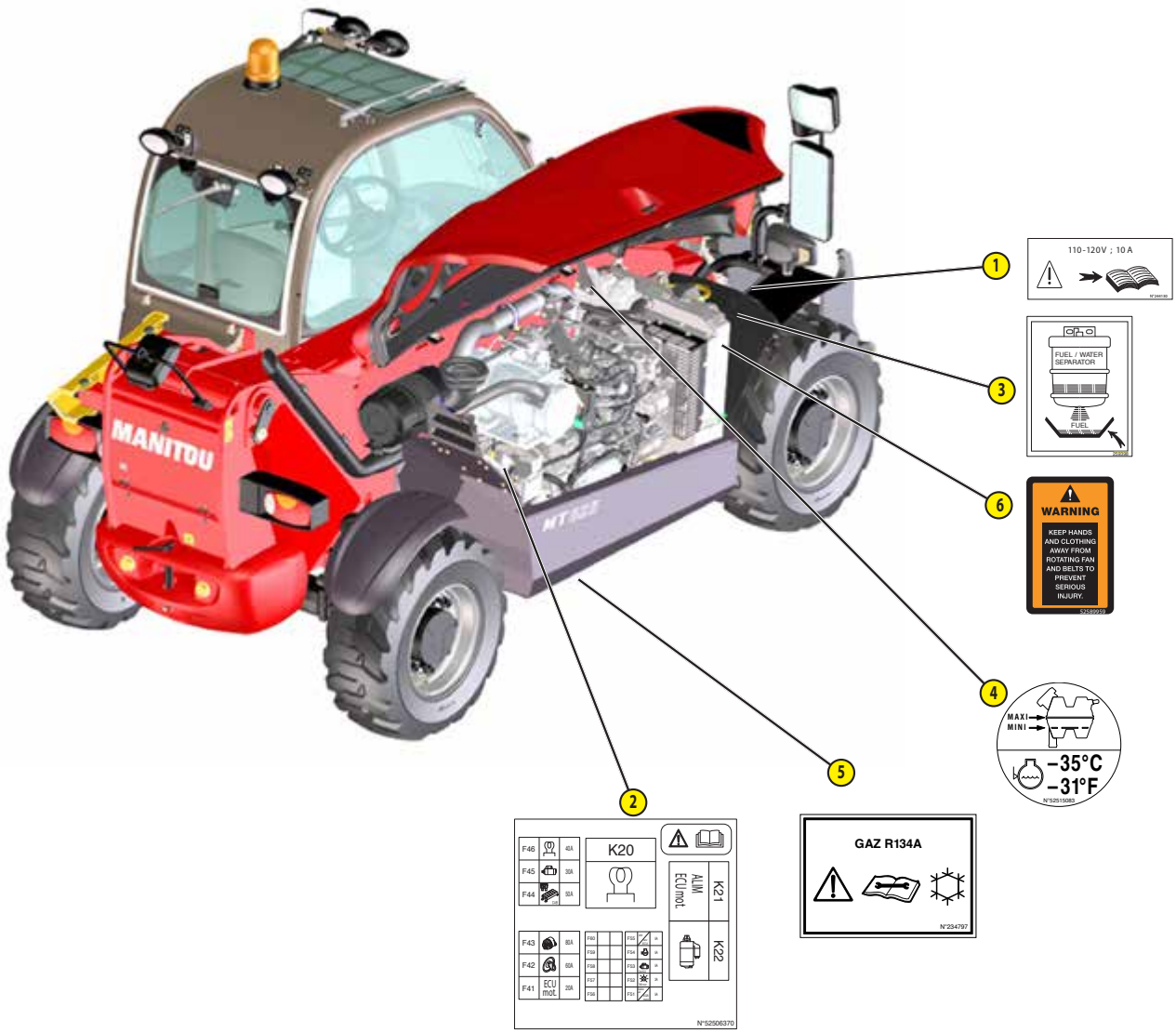

https://truckmanualshub.com/

## PLATES AND STICKERS IN THE CAB

| REF. | PART NO. | DESCRIPTION |
|---|---|---|
| 1 | 52611811 | - Lubrication sheet |
| 2 | 52509004 | - Manipulator function sheet |
| 3 | 241621 | - Safety instruction sheet |
| 5 | 52504055 | - Fuse sheet MT 625 H COMFORT 75K ST5 |
| | 52515060 | - Fuse sheet MT 625 H 75K ST5 |
| 6 | 52533603 | - Relay sheet MT 625 H COMFORT 75K ST5 |
| | 52509862 | - Relay sheet MT 625 H 75K ST5 |
| 8 | 319018 | - Carriage lifting ring sheet (OPTION) |
| 9 | 290439 | - Boom head electrovalve function sheet (OPTION) MT 625 H COMFORT 75K ST5 |
| 10 | 290183 | - Bucket instruction on telescope |
| 12 | 52515381 | - Main functions |
| 13 | 265284 | - Lifting ring on carriage (OPTION) |
| 14 | 184276 | - Steering selection |
| 15 | 52580160 | - Towing forbidden |
| 16 | 239594 | - Sound power level |
| 17 | 52580168 | - Cab compliance |
| 19 | 52521685 | - Diesel exhaust particle filter regeneration function sheet |
| 20 | 52504251 | - Consumption sheet |
| 21 | 240805 | - Reach chart sheet |
| 24 | 52588617 | - Seat belt |
| 25 | 52588615 | - Power line |
| 26 | 52618158 | - PROP 65 warning plomb |
| 27 | 52618159 | - PROP 65 Warning diesel engine exhaust |
| 28 | 52628703 | - CAN ICES-2 NMB-2 |
| 29 | 52588612 | - Before starting or operating |
| 30 | 52588614 | - No riders |
| 31 | 52588616 | - DANGER levage |
| 32 | 52651762 | - Hydraulic controls activation (DEPENDING ON ASSEMBLY) |

https://truckmanualshub.com/

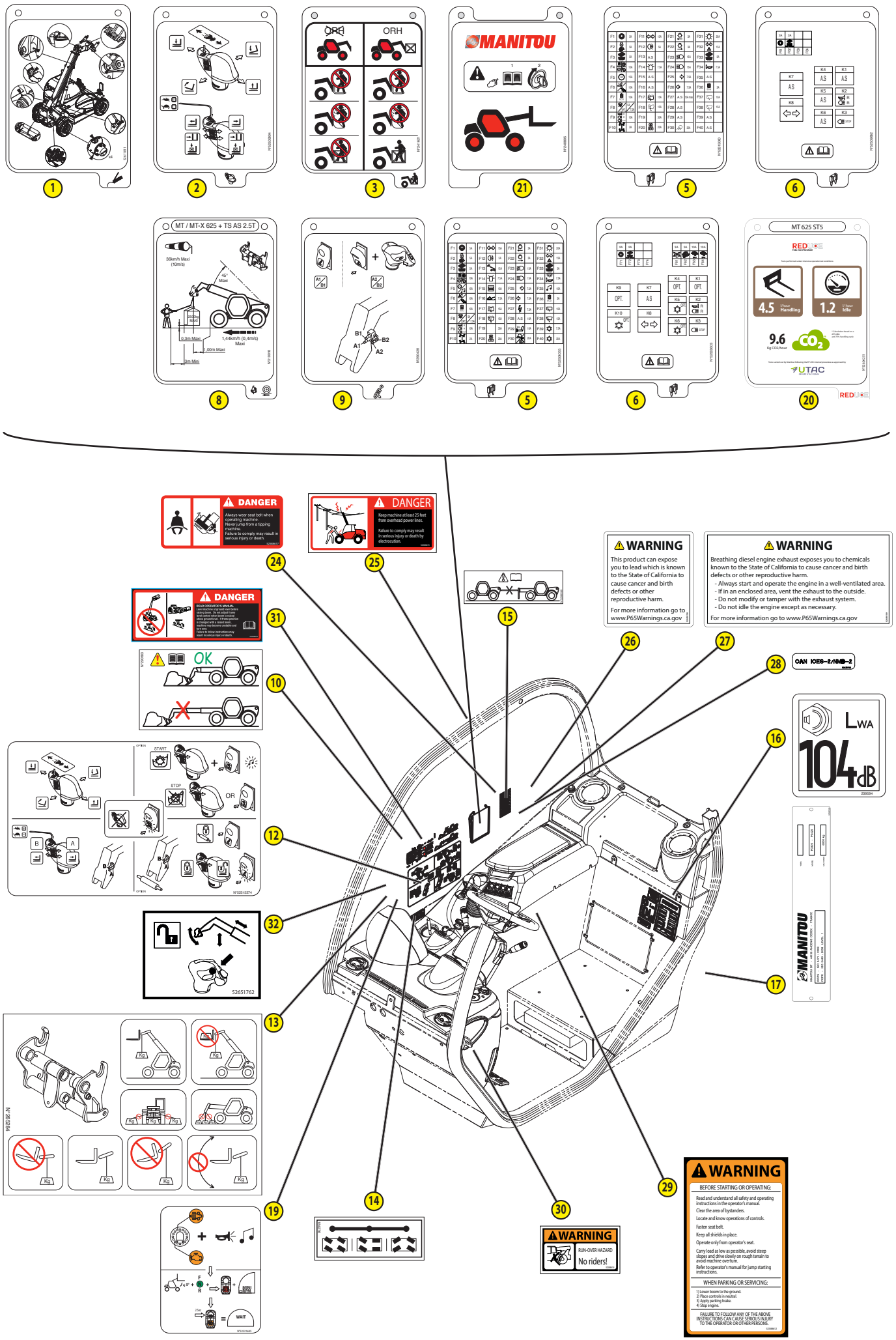

https://truckmanualshub.com/

# IDENTIFICATION OF THE LIFT TRUCK

As our policy is to promote a constant improvement in our products, our range of lift trucks may undergo certain modifications, without any obligation for us to advise our customers.

When you order parts, or when you require any technical information, always specify:

NOTE: For the owner's convenience, it is recommended that a note of these numbers is made in the spaces provided, at the time of the delivery of the lift truck.

For any further technical information regarding your lift truck refer to the chapter: CHARACTERISTICS.

## LIFT TRUCK MANUFACTURER'S PLATE

| | |
|---|---|
| **"Designation"** Désignation | |
| **"Series"** Série | |
| **"Year of manufacture"** Année de fabrication | |
| **"Model year"** Année modèle | |
| **"Serial Number / Product Identification Number"** Numéro de série / Numéro d'identification produit | |
| **"Unladen mass"** Masse à vide | |
| **"Rated capacity"** Capacité nominale | |

## ENGINE

| | |
|---|---|
| **"MODEL"** Model | |
| **"FAMILY"** Family | |
| **"POWER"** Power | |

## HYDROSTATIC PUMP

| | |
|---|---|
| **"MODEL"** Model | |
| **"CODE"** Code | |
| **"E1"** Identification | |
| **"SERNO"** Serial number | |
| **"SPEC"** Specification | |

## HYDROSTATIC MOTOR

| | |
|---|---|
| **"MODEL"** Model | |
| **"CODE"** Code | |
| **"E1"** Identification | |
| **"SERNO"** Serial number | |
| **"SPEC"** Specification | |

https://truckmanualshub.com/

## FRONT AXLE

| | |
|---|---|
| Type | |
| Serial number | |
| MANITOU part No. | |

## REAR AXLE

| | |
|---|---|
| Type | |
| Serial number | |
| MANITOU part No. | |

## CAB

| | |
|---|---|
| **"Constructeur"** Manufacturer | |
| **"Type Cabine"** Cabin type | |
| **"Numéro de série"** Serial number | |

## BOOM

| | |
|---|---|
| MANITOU Part No. | |
| Date of manufacture and manufacturer | |

## FRAME

| | |
|---|---|
| Serial number/Product identification number | |

## ATTACHMENT MANUFACTURER'S PLATE

| | |
|---|---|
| **"MODELE"** Model | |
| **"N° série"** Serial number | |
| **"Année Fabrication"** Year of manufacture | |
| **"Masse à vide"** Unladen weight | |
| **"Centre de gravité"** Centre of gravity | |
| **"Capacité Nominale"** Rated capacity | |
| **"Pression service"** Working pressure | |

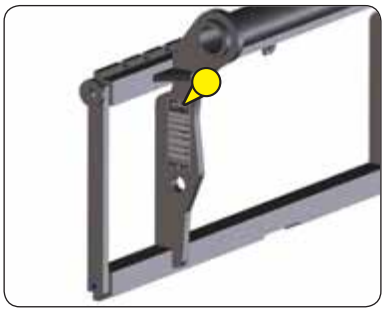

https://truckmanualshub.com/

# CHARACTERISTICS

| ENGINE | | |
|---|---|---|
| Type | | KUBOTA V3307 |
| Fuel | | Diesel |
| Number of cylinders | | 4 in line |
| Suction | | Supercharged |
| Injection system | | Direct |
| Ignition sequence | | 1.3.4.2 |
| Capacity | cu.in (cm³) | 203.27 (3331) |
| Bore and stroke | in (mm) | 3.7 x 4.72 (94 x 120) |
| Compression ratio | | 17,5 |
| Nominal speed laden | rpm | 2600 |
| Min. rpm unladen | rpm | 895 |
| Max. rpm unladen | rpm | 2800 |
| Power ISO 3046-1 | hp - kW | 75 - 55,4 |
| Power SAE J 1995 | hp - kW | 75 - 55,4 |
| Maximum torque ISO 3046-1 | ft-lbf (Nm) | 195.45 (265) to 1400 rpm |
| Air filtration efficiency | mil (µm) | 0.12 (3) |
| Type of cooling | | By water |
| Fan | | Puller |

| TRANSMISSION | | |
|---|---|---|
| Hydrostatic pump | | DANFOSS |
| - Type | | Variable displacement piston motor |
| - Forward/reverse selector | | Electro-hydraulic |
| - Number of forward speeds | | 2 (1 slow and 1 fast) |
| - Number of reverse speeds | | 2 (1 slow and 1 fast) |
| Main pump | | |
| - MAX - MIN. displacement | cu.in/r (cm³/tr) | 0 - 3.23 (0 - 53) |
| - MAX. flow rate | gpm (ℓ/min) | 36.5 (138) |
| - Working pressure | psi (bar) | 5076 (350) |
| Booster pump | | |
| - Capacity | cu.in/r (cm³/tr) | 0.73 (12) |
| - MAX. flow rate | gpm (ℓ/min) | 8.2 (31) |
| - Boost pressure MAX. speed | psi (bar) | 348 (24) (transmission in neutral) |
| Hydrostatic motor | | DANFOSS |
| - Type | | variable bi-directional |
| - MAX - MIN. displacement | cu.in/r (cm³/tr) | 1.77 - 6.71 (29 - 110) |
| Transfer gear box | | DANA |
| Front axle | | DANA |
| - Differential | | 45% limited slip differential |
| Rear axle | | DANA |
| - Differential | | Without locking |
| Drive wheels | | Permanent 4 WD |
| - 2/4 wheel drive control | | No |
| Front tyres | | SOLIDEAL/CAMSO |
| - Size | | 12-16,5 12PR SKS 532 |
| - Pressure | psi (bar) | 81.2 (5,6) |
| Rear tyres | | SOLIDEAL/CAMSO |
| - Size | | 12-16,5 12PR SKS 532 |
| - Pressure | psi (bar) | 81.2 (5,6) |

| ELECTRIC CIRCUIT | |
|---|---|
| Battery | 12 V - 110 Ah - 750 A EN |
| Alternator | 12 V - 80 A |
| - Type | A5TA59 77C |
| Starter | 12 V - 3 kW |
| - Type | M008T50672 |

| SOUND AND VIBRATION | | |
|---|---|---|
| Sound pressure level in the driver's cab LpA (as per standard EN 12053) | dB | 76 (cab closed) ; xx (cab open) |
| Sound pressure (according to directive 2009/76) | dB | xx (cab closed) ; xx (cab open) |
| Sound pressure level ensured in the LwA environment (according to directive 2000/14/EC modified by directive 2005/88/EC) | dB | 104 (measured) ; 104 (guaranteed) |
| Sound level in motion (according to directive 2009/63) | dB | xx |
| Average weighted acceleration on driver's body (as per standard EN 13059) | ft/s² (m/s²) | 3.61 (1,1) |
| The average weighted acceleration transmitted to the driver's hand/arm system (according to ISO 5349-2) | ft/s² (m/s²) | < 8.2 (2,5) |
| Standard seat vibration | ft/s² (m/s²) | xx (lightweight operator) ; xx (heavyweight operator) |

https://truckmanualshub.com/

| BRAKE SYSTEM | | |
|---|---|---|
| | | |
| Service brake | | Non-servo hydraulic brake |
| - Type of brake | | Oil-immersed multi-disc brake |
| - Type of control | | By foot on front axle |
| Parking brake | | Low pressure hydraulic brake |
| - Type of brake | | Oil-immersed multi-disc brake |
| - Type of control | | Switch-operated electro-hydraulic |

| HYDRAULIC CIRCUIT | | |
|---|---|---|
| Hydraulic pump | | |
| - Type | | with gears |
| | | |
| - Capacity | cu.in (cm³) | 1.92 (31,4) |
| - Max. rating capacity unladen | gpm (ℓ/min) | 23.2 (87,9) |
| - Flow rate at 1600 rpm | gpm (ℓ/min) | 13.3 (50,2) |
| Filtration | | |
| - Return | mil (µm) | 0.39 (10) |
| - Suction | mil (µm) | 4.92 (125) |
| Maximum service pressure | psi (bar) | 3408.4 (235) |
| - Telescoping circuit | psi (bar) | 3408.4 (235) / 3408.4 (235) |
| - Lifting circuit | psi (bar) | 3408.4 (235) / 3408.4 (235) |
| - Tilting circuit | psi (bar) | 3553.4 (245) / 3553.4 (245) |
| - Attachment circuit | psi (bar) | 3408.4 (235) |
| - Steering circuit | psi (bar) | 2030.5 (140) |

| HYDRAULIC MOVEMENTS | | |
|---|---|---|
| Lifting motions (boom retracted) | | |
| - Unladen lifting | s - ft/min (m/min) | 8 - 92.85 (28,3) |
| - Laden lifting | s - ft/min (m/min) | 8 - 92.85 (28,3) |
| - Unladen lowering | s - ft/min (m/min) | 5,4 - 137.47 (41,9) |
| - Laden lowering | s - ft/min (m/min) | 5,3 - 140.09 (42,7) |
| Telescoping motions (boom raised) | | |
| - Unladen extending | s - ft/min (m/min) | 5,6 - 73.16 (22,3) |
| - Laden extending | s - ft/min (m/min) | 5,9 - 77.1 (23,5) |
| - Unladen retracting | s - ft/min (m/min) | 4,3 - 100.39 (30,6) |
| - Laden retracting | s - ft/min (m/min) | 4 - 107.94 (32,9) |
| Tilting movements | | |
| - Unladen digging | s - °/s | 3,5 - 36,7 |
| - Unladen discharging | s - °/s | 3,6 - 35,6 |

| SPECIFICATIONS AND WEIGHTS | | | |
|---|---|---|---|
| Speed of movement for lift truck in standard configuration on flat ground | | | |
| • Front unladen | • 1 Slow | mph (km/h) | 4.35 (7) |
| | • 1 fast | mph (km/h) | 15.53 (25) |
| • Rear unladen | • 1 Slow | mph (km/h) | 4.35 (7) |
| | • 1 fast | mph (km/h) | 15.53 (25) |
| Standard attachment | | | PFB 25N 1020 MT |
| - Weight of attachment (without forks) | | lbs (kg) | 176.4 (80) |
| - Weight of forks (each) | | lbs (kg) | 159.8 (72,5) |
| Rated capacity with standard attachment | | lbs (kg) | 5512 (2500) |
| Tipping load at maximum reach on tires | | lbs (kg) | - |
| Distance from the centre of gravity of the load to the base of the forks | | in (mm) | 19.69 (500) |
| Standard lifting height | | in (mm) | 229.1 (5820) |
| Lift truck weight without attachment | | lbs (kg) | 10086 (4575) |
| Weight of lift truck with standard attachment | | | |
| - Unladen | | lbs (kg) | 10582 (4800) |
| - At rated load | | lbs (kg) | 16094 (7300) |
| Weight per axle with standard attachment (transport position) | | | |
| - Front unladen | | lbs (kg) | 5093 (2310) |
| - Rear unladen | | lbs (kg) | 5490 (2490) |
| - Front rated load | | lbs (kg) | 14661 (6650) |
| - Rear rated load | | lbs (kg) | 1433 (650) |
| Weight per axle with standard attachment (boom extended) | | | |
| - Front rated load | | lbs (kg) | 11552 (5240) |
| - Rear rated load | | lbs (kg) | 794 (360) |
| Drag strain on the coupling hook | | | |
| - Unladen (sliding) | | lbf (daN) | 7261 (3230) |
| - At rated load (transmission setting) | | lbf (daN) | 7981 (3550) |
| Breakout force with bucket (according to ISO 8313) | | lbf (daN) | 7704 (3427) |

https://truckmanualshub.com/

# TYRES

| | | PRESSURE | | LOAD PER TYRE | | | | | | | |
|---|---|---|---|---|---|---|---|---|---|---|---|
| | | | | FRONT UNLADEN | | FRONT LADEN | | REAR UNLADEN | | REAR LADEN | |
| | | bar | psi | kg | lbs | kg | lbs | kg | lbs | kg | lbs |
| ALLIANCE | 12-16,5 12PR SKS 532 | 5,6 | 81,2 | 1100 | 2425 | 3250 | 7165 | 1250 | 2756 | 350 | 772 |
| | 12-16,5 12PR HAULER SKS | 5,6 | 81,2 | | | | | | | | |
| MICHELIN | 305/70 R16,5 137A8 BIBSTEEL ALL TERRAIN | 4,8 | 69,6 | | | | | | | | |

| | | PRESSURE | | LOAD | | GROUND CONTACT PRESSURE | | | | GROUND CONTACT AREA | | | |
|---|---|---|---|---|---|---|---|---|---|---|---|---|---|
| | | | | | | HARD GROUND | | SOFT GROUND | | HARD GROUND | | SOFT GROUND | |
| | | bar | psi | kg | lbs | kg / cm² | lbs / in² | kg / cm² | lbs / in² | cm² | in² | cm² | in² |
| SOLIDEAL/ CAMSO | 12-16,5 12PR SKS 532 | 5,6 | 81,2 | 350 | 772 | 6,48 | 92,17 | 3,50 | 49,78 | 54 | 8,37 | 100 | 15,50 |
| | | | | 1100 | 2425 | 7,97 | 113,36 | 4,00 | 56,89 | 138 | 21,39 | 275 | 42,63 |
| | | | | 1250 | 2756 | 8,01 | 113,93 | 4,01 | 57,04 | 156 | 24,18 | 312 | 48,36 |
| | | | | 3250 | 7165 | 10,00 | 142,24 | 5,00 | 71,12 | 325 | 50,38 | 650 | 100,75 |
| | 12-16,5 12PR HAULER SKS | 5,6 | 81,2 | 350 | 772 | 5,00 | 71,12 | 2,50 | 35,56 | 70 | 10,85 | 140 | 21,70 |
| | | | | 1100 | 2425 | 7,01 | 99,71 | 3,50 | 49,78 | 157 | 24,34 | 314 | 48,67 |
| | | | | 1250 | 2756 | 7,02 | 99,85 | 3,50 | 49,78 | 178 | 27,59 | 357 | 55,34 |
| | | | | 3250 | 7165 | 11,02 | 156,74 | 5,51 | 78,37 | 295 | 45,73 | 590 | 91,45 |
| MICHELIN | 305/70 R16,5 137A8 BIBSTEEL ALL TERRAIN | 4,8 | 69,6 | 350 | 772 | | | | | | | | |
| | | | | 1100 | 2425 | | | | | | | | |
| | | | | 1250 | 2756 | | | | | | | | |
| | | | | 3250 | 7165 | | | | | | | | |

https://truckmanualshub.com/

https://truckmanualshub.com/

# DIMENSIONS AND LOAD CHARTS

| | | | | |
|---|---|---|---|---|
| **A** | ft-in | (mm) | 3-11,2 | (1200) |
| **B** | ft-in | (mm) | 7-6,6 | (2300) |
| **C** | ft-in | (mm) | 3-3 | (991) |
| **C1** | ft-in | (mm) | 3-0,5 | (928) |
| **D** | ft-in | (mm) | 12-9,3 | (3894) |
| **D1** | ft-in | (mm) | 12-6,8 | (3831) |
| **D2** | ft-in | (mm) | 10-8,9 | (3275) |
| **E** | ft-in | (mm) | 16-8,6 | (5094) |
| **F** | ft-in | (mm) | 4-10,7 | (1492) |
| **F1** | ft-in | (mm) | 4-10,7 | (1492) |
| **G** | in | (mm) | 9,45 | (240) |
| **G1** | in | (mm) | 13 | (330) |
| **G2** | in | (mm) | 9,96 | (253) |
| **G3** | in | (mm) | - | - |
| **H** | ° | ° | - | - |
| **H1** | ° | ° | - | - |
| **I** | in | (mm) | 23,74 | (603) |
| **J** | in | (mm) | 31,38 | (797) |
| **K** | ft-in | (mm) | 3-4 | (1015) |
| **L** | in | (mm) | 1,77 | (45) |
| **N** | ft-in | (mm) | 4-3,7 | (1314) |
| **O** | in | (mm) | 4,92 | (125) |
| **P2** | ° | ° | 37 | (37) |
| **P3** | ° | ° | 52 | (52) |
| **R** | ft-in | (mm) | 10-4 | (3150) |
| **S** | ft-in | (mm) | 21-9,9 | (6651,5) |
| **T** | ft-in | (mm) | 12-10,9 | (3935) |
| **U1** | ft-in | (mm) | 6-3,6 | (1920) |
| **U2** | ft-in | (mm) | 6-8,9 | (2054) |
| **V** | ft-in | (mm) | 15-5 | (4700) |
| **V1** | ft-in | (mm) | 2-6,1 | (765) |
| **V2** | ft-in | (mm) | 10-10,3 | (3310,5) |
| **W** | ft-in | (mm) | 5-11,4 | (1813) |
| **W1** | ft-in | (mm) | - | - |
| **W2** | ft-in | (mm) | - | - |
| **W3** | ft-in | (mm) | - | - |
| **Y** | ° | ° | 12 | (12) |
| **Z** | ° | ° | 117 | (117) |

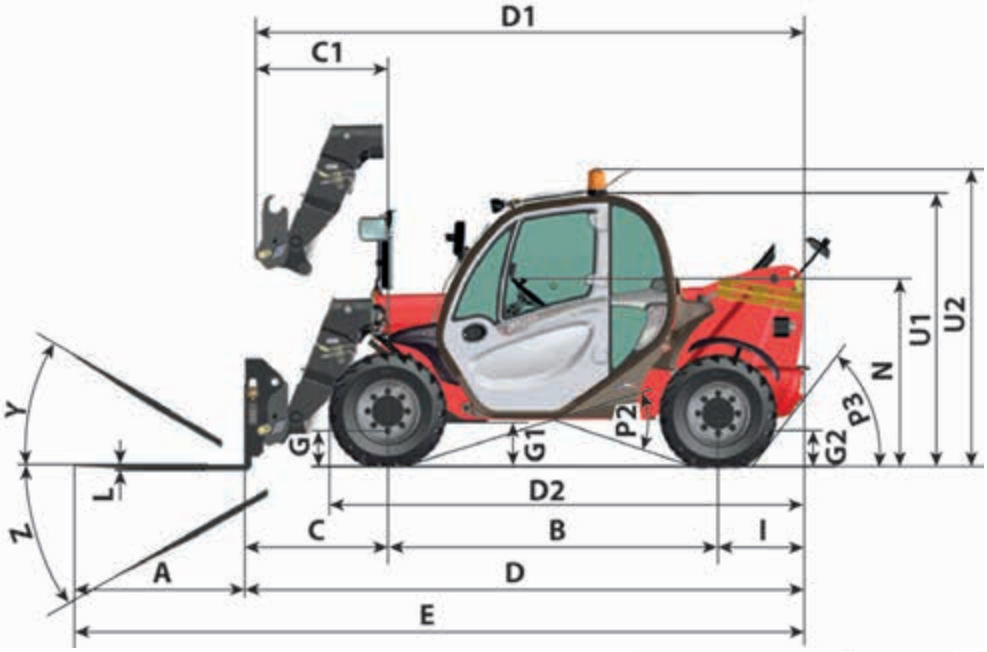

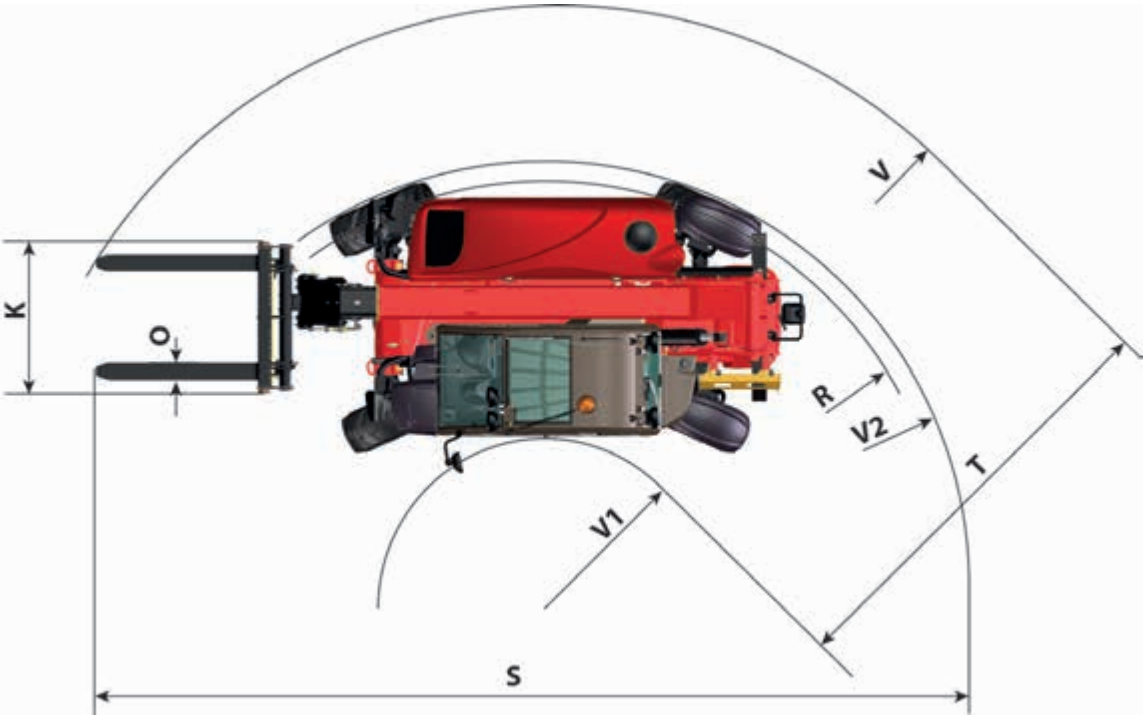

https://truckmanualshub.com/

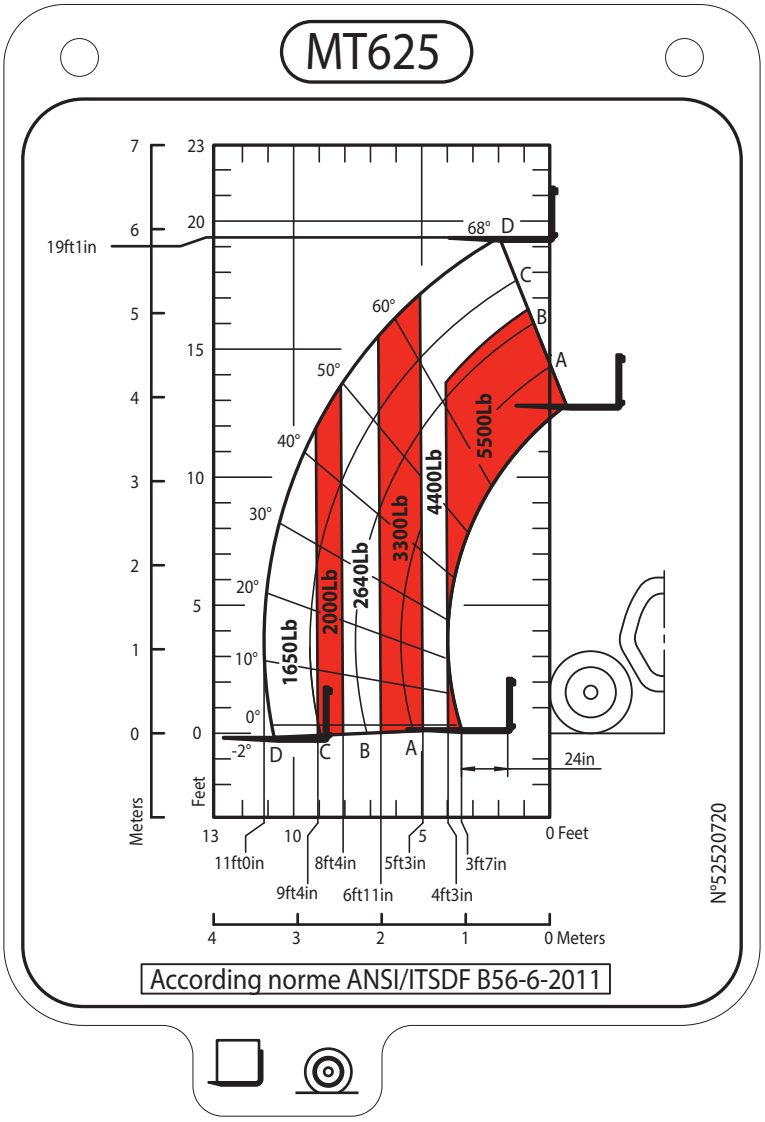

https://truckmanualshub.com/

# VISIBILITY

We use European standard EN15830 relating to operator visibility.

- Adhere to the instructions for optimising operator visibility in the immediate vicinity (◁ 1 - OPERATING AND SAFETY INSTRUCTIONS: INSTRUCTIONS TO THE OPERATOR: DRIVING INSTRUCTIONS UNLADEN AND LADEN: D - VISIBILITY).

## DESCRIPTION AND ADJUSTMENT OF REAR-VIEW MIRRORS

1 - LEFT REAR-VIEW MIRROR
2 - MAIN RIGHT REAR-VIEW MIRROR
3 - CENTRAL RIGHT REAR-VIEW MIRROR
4 - UPPER RIGHT REAR-VIEW MIRROR
5 - INSIDE REAR-VIEW MIRROR (OPTION)
6 - REAR-VIEW MIRROR (OPTION)

- Place the lift truck on level ground with the engine stopped, and the boom retracted and lowered as far as possible.
- Note the position of the reference points ●···○ in the illustrations, to see and correctly adjust the rear-view mirrors.

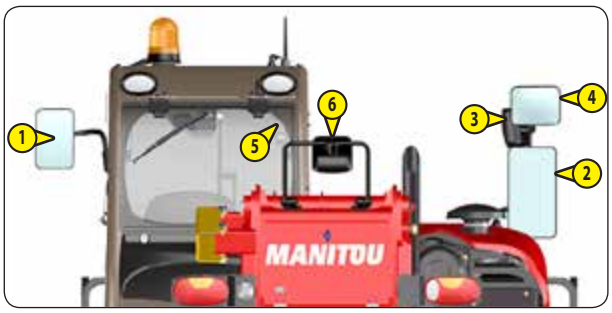


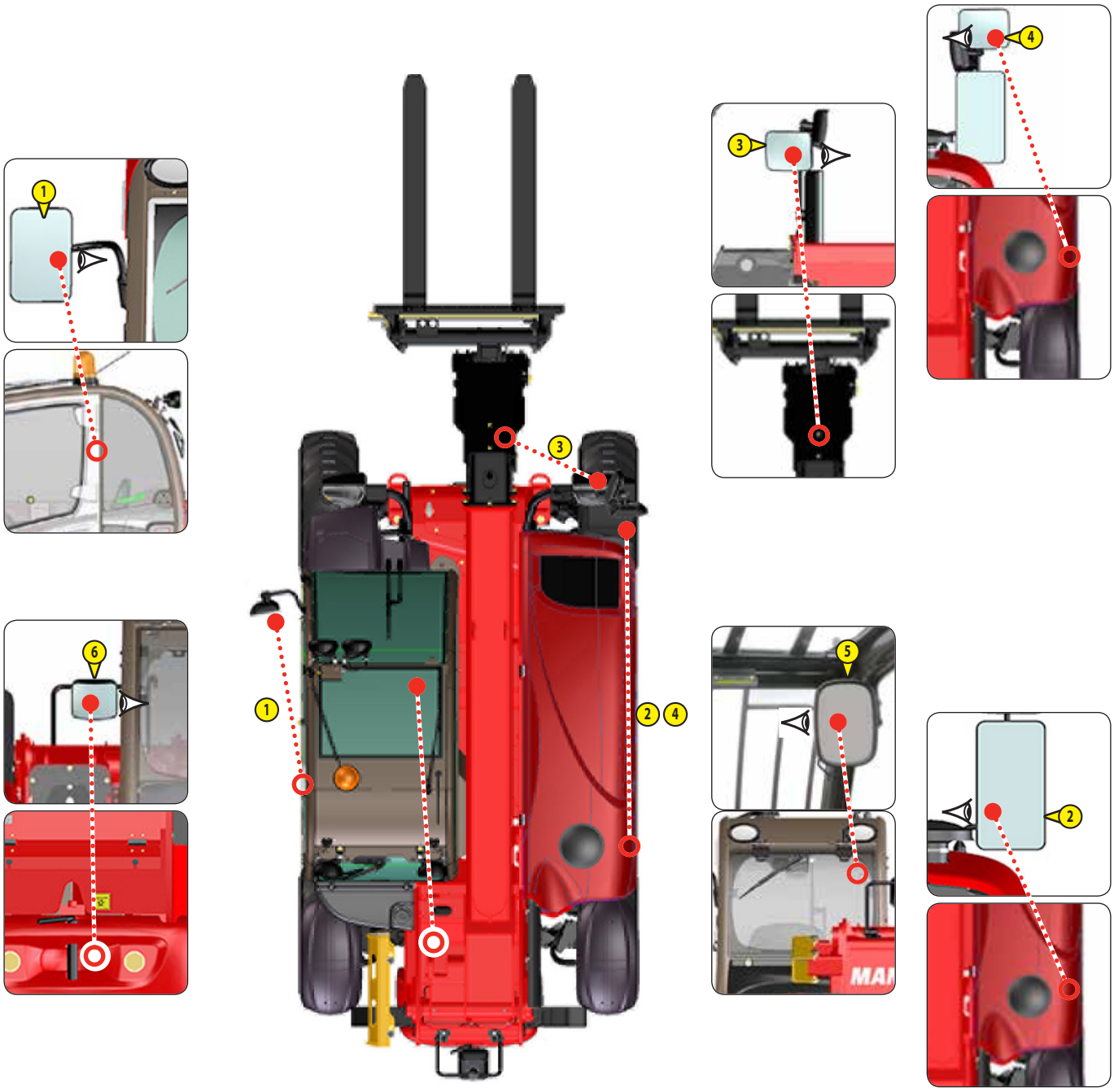

https://truckmanualshub.com/

https://truckmanualshub.com/

# INSTRUMENTS AND CONTROLS

## DESCRIPTION

NOTE: All the terms such as: RIGHT, LEFT, FRONT, REAR are as seen by an observer occupying the driver's seat and looking straight ahead.


1 - DRIVER'S CAB ACCESS ..... 2-20
2 - SEAT BELT ..... 2-20
3 - DRIVER'S SEAT ..... 2-21
4 - IGNITION SWITCH ..... 2-22
5 - EMERGENCY STOP ..... 2-22
6 - BATTERY CUT-OFF ..... 2-22
7 - BATTERY ..... 2-22
8 - MAN-MACHINE INTERFACE (MMI) ..... 2-23
9 - SWITCHES ..... 2-27
10 - ARMREST AND STORAGE ..... 2-28
11 - DIAGNOSTIC PLUG ..... 2-28
12 - FUSES AND RELAYS ..... 2-29
13 - CIGARETTE LIGHTER ..... 2-31
14 - LIGHTING, HORN AND INDICATOR SWITCH ..... 2-31
15 - FRONT AND REAR WINDSCREEN WIPER SWITCH ..... 2-31
16 - FUNCTION FILES ..... 2-31
17 - HYDRAULIC CONTROLS ..... 2-32
18 - ACCELERATOR PEDAL ..... 2-34
19 - SERVICE BRAKE PEDAL AND TRANSMISSION CUT-OFF ..... 2-34
20 - FORWARD/NEUTRAL/REVERSE GEAR SELECTION ..... 2-34
21 - STEERING SELECTION ..... 2-35
22 - HEATER CONTROL ..... 2-36
23 - AIR CONDITIONING CONTROLS (AIR CONDITIONING OPTION) ..... 2-36
24 - HEATING VENTS ..... 2-37
25 - DEMIST VENTS ..... 2-37
26 - LEVEL INDICATOR ..... 2-37
27 - DOOR LOCK ..... 2-37
28 - DOOR WINDOW OPENING HANDLE ..... 2-37
29 - DOOR WINDOW RELEASE BUTTON ..... 2-37
30 - HANDLE FOR REAR WINDOW OPENING ..... 2-37
31 - REAR STORAGE SPACE ..... 2-37
32 - DOCUMENT STORAGE NET ..... 2-37
33 - STEERING WHEEL ADJUSTMENT LEVER (OPTION) ..... 2-37
34 - FRONT HEADLIGHTS ..... 2-38
35 - REAR LIGHTS ..... 2-38
36 - ROTATING BEACON LIGHT (DEPENDING ON ASSEMBLY) ..... 2-38
37 - ROOF LIGHT (DEPENDING ON ASSEMBLY) ..... 2-38
38 - ROOF-SIDE WINDSCREEN WIPER SWITCH (DEPENDING ON ASSEMBLY) ..... 2-38
39 - SUN VISOR ..... 2-38
40 - BOOM SAFETY WEDGE ..... 2-39
41 - FUEL TANK ..... 2-39
42 - "A-B-C-D-E" MARKING ON BOOM ..... 2-39
43 - ANGULAR SECTOR ON BOOM ..... 2-39

https://truckmanualshub.com/

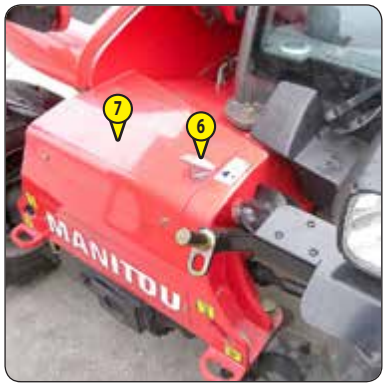

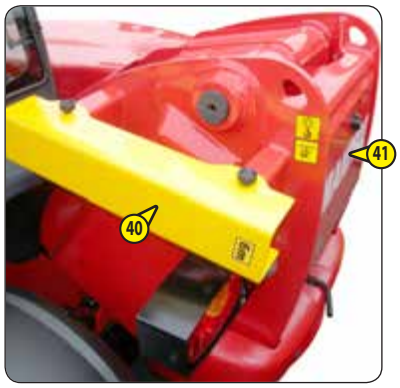

https://truckmanualshub.com/

## 1 - DRIVER'S CAB ACCESS

Use the contact points 1 to get into or out of the driver's cab.

- Mounting at the front.
- Descending at the rear.

## 2 - SEAT BELT

**IMPORTANT**

*Under no circumstances must the lift truck be used if the seat belt is defective (fixing, locking, cuts, tears, etc.). Immediately repair or replace the safety belt.*

- Sit correctly on the seat.
- Check that seat belt is not twisted.
- Place the seat belt at hip level.
- Attach the seat belt and check that it locks.
- Adjust the seat belt to your body shape without compressing your pelvis and without excessive slack.

https://truckmanualshub.com/

## 3 - DRIVER'S SEAT

DESIGNED FOR MAXIMUM COMFORT, THIS SEAT CAN BE ADJUSTED AS FOLLOWS.

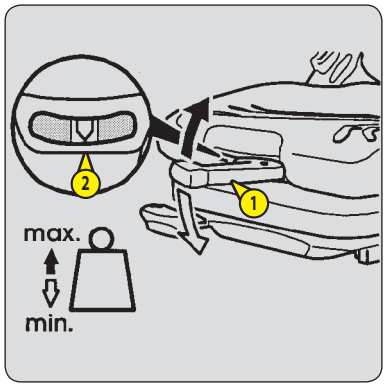


### WEIGHT ADJUSTMENT

Adjust the weight when the driver is sitting on the seat.

- Pull the weight adjustment lever 1 fully out.
- Move the weight adjustment lever 1 upwards to increase the weight or downwards to reduce it.
- There are ten possible positions between the min and max weights. Before each run, return the lever to the central position. The max. or min. position is indicated by a freely travelling lever.
- The driver's weight is correctly adjusted when the arrow is in the centre of indicator lamp 2.
- After completing the weight adjustment, fully lower the lever 1.

NOTE: To avoid any health problems, it is recommended that the weight setting is checked and adjusted before starting the lift truck.

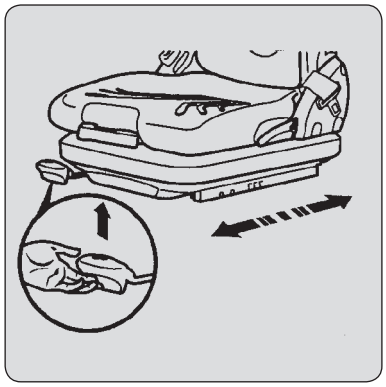

### LONGITUDINAL ADJUSTMENT

- Adjust the locking lever until you reach the position required. This then locks and the seat will not shift into another position.

**⚠ IMPORTANT ⚠**

*Only operate the lever by its recessed section and do not grasp from below, at the risk of crushing the hand.*

### LUMBAR ADJUSTMENT

This increases the comfort of the seat and the driver's freedom of movement.

- Turn the handle to 1 to adjust the height and depth of the lumbar support of the upper part of the back-rest.
- Turn the handle to 2 to adjust the height and depth of the lumbar support of the lower part of the back-rest.

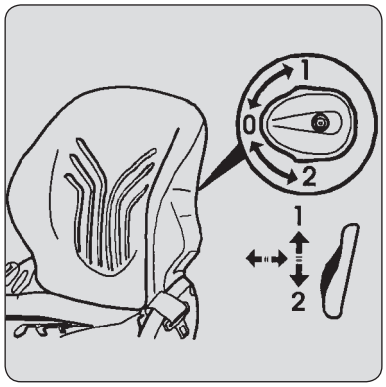


### BACK-REST ANGLE ADJUSTMENT

- Support the back-rest, pull the lever and position the back-rest to find the desired position.

**⚠ IMPORTANT ⚠**

*If you do not support the back rest when making adjustments, it will tilt forwards.*

### MAINTENANCE

Dirt may adversely affect the correct functioning of the seat. For this reason, make sure your seat is always clean.

- The cushions do not require to be removed from the seat frame for cleaning.

**⚠ IMPORTANT ⚠**

*Accident risks are increased when the back-rest tilts.*

First check the resistance of the fabric on a small concealed area before using any fabric and plastic cleaner.

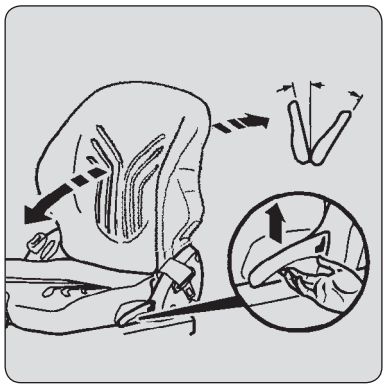

https://truckmanualshub.com/

## 4 - IGNITION SWITCH

This switch has 5 positions:

- P - Not used.
- O - Ignition cut-off and engine stopped.
- I - Ignition + preheat.
- II - Not used.
- III - Starting and return to position I as soon as the key is released.

## 5 - EMERGENCY STOP

In the event of danger, it enables the engine to be shut down, thereby cutting-off all hydraulic movements.

**IMPORTANT**

*Be ready for hydraulic movements suddenly stopping when you press this button.*
*If possible stop the lift truck before using the emergency stop button.*

- Turn the knob to deactivate it before restarting the lift truck.

## 6 - BATTERY CUT-OFF

For quickly disconnecting the battery when working on the electric circuit or when soldering, for example.

**IMPORTANT**

*Operate the battery cut-off for a minimum of 30 seconds after having switched off the ignition with the ignition key.*

## 7 - BATTERY

https://truckmanualshub.com/

# 8 - MAN-MACHINE INTERFACE (MMI)

- A - INSTRUMENT CONTROL PANEL
- B - SCREEN DISPLAYS

## A - INSTRUMENT CONTROL PANEL

**⚠ IMPORTANT ⚠**

*A permanently lit or flashing warning lamp, with the engine running, is the sign of an operating fault. The lighting of some lamps may be accompanied by an audible signal. Do not ignore this warning, consult your dealer without delay. If one of the warning lamps comes on while the lift truck is in motion, stop the lift truck under the safest possible conditions.*

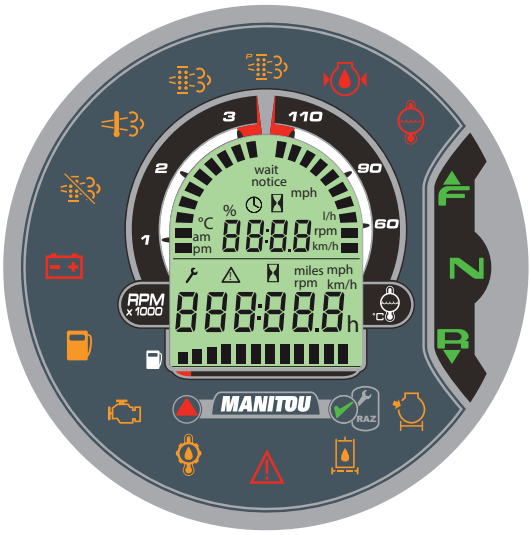


### REV COUNTER

10-level LED display from 0 to 3000 rpm.

### ENGINE WATER TEMPERATURE

Temperature zones:

- 1 LED - (< 104 °F) or (< 40 °C) zone. Use the lift truck with moderation, wait for temperature to increase before normal operation.
- 2 LEDs - (104 °F- 140 °F) or (40 °C - 60 °C) zone.
- 3 LEDs - (140 °F- 176 °F) or (60 °C - 80 °C) zone.
- 4 LEDs - (176 °F- 185 °F) or (80 °C - 85 °C) zone.
- 5 LEDs - (185 °F- 194 °F) or (85 °C - 90 °C) zone.
- 6 LEDs - (194 °F- 203 °F) or (90 °C - 95 °C) zone from (104 °F to 203 °F) or (40 °C to 95 °C) use the lift truck normally.
- 7 LEDs - (203 °F- 221 °F) or (95 °C - 105 °C) zone. Use the lift truck with moderation.
- 8 LEDs - (221 °F- 230 °F) or (105 °C - 110 °C) zone. Use the lift truck with moderation, ventilation control operating at full speed.
- 9 LEDs - Red zone (230 °F- 239 °F) or (110 °C - 115 °C).
- 10 LEDs - Red zone (> 239 °F) or (> 115 °C) Stop the lift truck, seek the cause of overheating.

NOTE: If the red indicator lamp and the buzzer come on (> 230 °F) or (> 110 °C) when the lift truck is running, stop the engine immediately and seek the cause of the failure in the cooling system.

### FUEL LEVEL

When only one LED is still displayed, the indicator lamp comes on, indicating that you are using the reserve fuel supply and that your operating time is limited.

### FORWARD/NEUTRAL/REVERSE INDICATOR

◁ FORWARD/NEUTRAL/REVERSE GEAR SELECTION

### AIR FILTER CLOGGING WARNING INDICATOR LAMP

The indicator lamp and buzzer come on when the air filter cartridge is clogged. When this indicator lamp remains on continuously the cartridge needs changing. Stop the engine and carry out the necessary repairs (◁ 3 - MAINTENANCE: FILTER ELEMENTS AND BELTS).

### HYDRAULIC OIL FILTER CLOGGING WARNING INDICATOR LAMP

The indicator lamp and the buzzer come on when the hydraulic oil filter cartridge is clogged. Stop the engine and carry out the necessary repairs (◁ 3 - MAINTENANCE: FILTER ELEMENTS AND BELTS).

### GENERAL FAULT WARNING INDICATOR LAMP

If the lamp and the buzzer come on when the lift truck is running, stop the engine immediately and consult your dealer.

https://truckmanualshub.com/

### TRANSMISSION OIL TEMPERATURE WARNING INDICATOR LAMP

The lamp and the buzzer come on when the transmission oil temperature is abnormally high. Stop the lift truck and seek the cause of this overheating.

### ENGINE FAULT INDICATOR LAMP

If the indicator lamp comes on or flashes while the lift truck is in operation, a diagnostic fault has been detected. The lift truck will operate in reduced mode. Consult your dealer without delay.

### FUEL LEVEL LAMP WARNING INDICATOR LAMP

◁ FUEL LEVEL

### BATTERY CHARGE WARNING INDICATOR LAMP

If the lamp and the buzzer come on when the lift truck is running, stop the engine immediately and seek the cause (electric circuit, alternator belt, alternator, etc.).

### AUTOMATIC EXHAUST PURIFICATION DEACTIVATED INDICATORLAMP

The indicator lamp comes on when the lift truck is running to indicate that the automatic exhaust purification is disabled (◁ SWITCHES).

### HIGH EXHAUST GAS TEMPERATURE INDICATOR LAMP

The indicator lamp comes on.while the lift truck is operating to indicate a high exhaust gas temperature. You can continue to use the lift truck (◁ SWITCHES).

### SOOT LEVEL INDICATOR LAMP

The indicator lamp comes on while the lift truck is operating to indicate the soot level (◁ SWITCHES).

### "STATIONARY LIFT TRUCK" EXHAUST PURIFICATION INDICATOR LAMP

The indicator lamp comes on while the lift truck is operating, indicating a "stationary lift truck" exhaust purification is in progress (◁ 3 - MAINTENANCE; OCCASIONAL MAINTENANCE).

### ENGINE OIL PRESSURE WARNING INDICATOR LAMP

If the indicator lamp and the buzzer come on when the lift truck is operating, stop the engine immediately and look for the cause (engine oil level, etc.).

### ENGINE WATER TEMPERATURE WARNING INDICATOR LAMP

◁ ENGINE WATER TEMPERATURE

https://truckmanualshub.com/

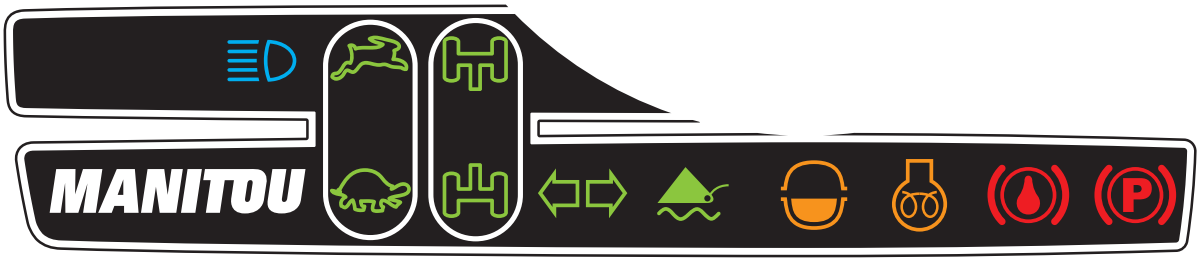


### PARKING BRAKE FAULT INDICATOR LAMP

The indicator lamp comes on when the parking brake is applied (◁ SWITCHES).

### BRAKING OIL LEVEL WARNING INDICATOR LAMP

If the lamp comes on when the lift truck is running, stop the engine immediately and check the brake fluid level. In the event of an abnormal drop in the level, consult your dealer.

### ENGINE PREHEAT FAULT INDICATOR LAMP

If preheating is required, the lamp comes on when the lift truck's ignition is switched on and should go out as soon as pre-heating is ended. If this lamp comes on while the lift truck is in operation, immediately stop the engine and seek the cause.

### WATER IN FUEL PRE-FILTER WARNING INDICATOR LAMP

This light will come on when there is water in the fuel pre-filter. Stop the lift truck and carry out the necessary repairs.

### NOT USED

### INDICATOR LIGHTS INDICATOR LAMP

### FRONT WHEEL ALIGNMENT INDICATOR LAMP

### REAR WHEEL ALIGNMENT INDICATOR LAMP

### FAST GEAR INDICATOR LAMP

### SLOW GEAR INDICATOR LAMP

### BLUE MAIN BEAM HEADLIGHTS INDICATOR LAMP

## *B - SCREEN DISPLAYS*

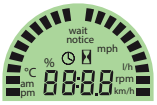


UPPER SCREEN DISPLAY

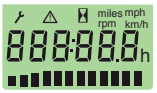


LOWER SCREEN DISPLAY

SCROLL BUTTON

VALIDATION, RESET AND ERROR CODE BUTTON

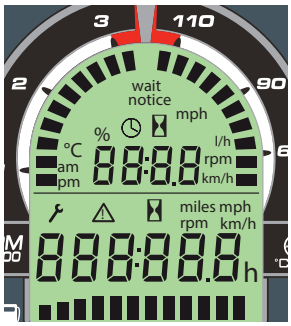


### UPPER SCREEN DISPLAY

Switch on the lift truck ignition, by default, the screen will show the time. Press the scroll button to switch from one screen to the other in turn.

https://truckmanualshub.com/

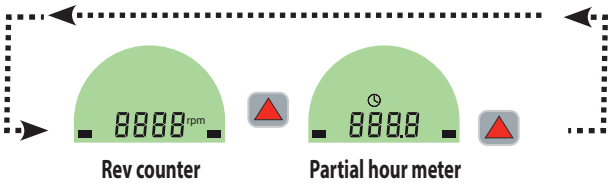


SETTING THE TIME

- Display clock screen.
- Press the button for 2 seconds, choose the "24 hour" or "12 hour am/pm" clock with the button and confirm .
- Set the hours with the button and confirm .
- Set the minutes with the button and confirm .

**RESETTING THE PARTIAL HOUR METER**

- Display the partial hour meter screen.
- Press the button for 2 seconds, resetting is confirmed by an audible signal.

**LOWER SCREEN DISPLAY**

Switch on the lift truck ignition, by default, the screen will show the hour meter , i.e. the total number of hours the lift truck has been used. As soon as the engine is running, the flashing pictogram is displayed and the hour meter records the hours of operation.

MAINTENANCE INTERVAL

NOTE: When the new lift truck is started, the maintenance key will logically be displayed to provide a reminder to replace the engine oil and the oil filter after the first 50 hours of use of the new lift truck (3 - MAINTENANCE: DAILY AND WEEKLY SERVICING).

The maintenance key appears on the hour meter screen 50 hours before the maintenance deadline and generates an audible signal.

- Press the button to display the time remaining before maintenance . In the event that the deadline is exceeded, the hours are shown with a plus sign.
- Press once more on the button to return to the hour meter screen. The maintenance key will be displayed for information.
- Contact your dealer to carry out the necessary maintenance operations and reset the maintenance interval.

NOTE: The maintenance frequency interval displayed by default is 500 hours; this interval can be modified. Please contract your dealer about this.

**ERROR CODES**

The appearance of the pictogram on the hour meter screen together with an audible signal, indicate that a fault has been detected by one of the lift truck's Electronic Control Units (ECU).

- Press the button to display the information on the upper screen, as well as the error code .
- If there are several error codes, press the button to scroll through all the error codes.
- Press the button again to return to the hour meter screen; the pictogram will remain displayed as long the as the required repairs have not been carried out.
- Contact your dealer, stating the error code or codes.

NOTE: A faulty fuse can generate several error codes. When "error codes" and "maintenance interval" are displayed together, the maintenance reminder time will appear at the end of the list.

https://truckmanualshub.com/

## 9 - SWITCHES

NOTE: The location of the switches may vary depending on the options.

**HAZARD WARNING LIGHTS**

**REAR FOG LIGHT (OPTION)**

**ROTATING BEACON LIGHT**

**FRONT AND REAR WORKING LIGHTS (OPTION)**

**REAR WINDOW DEFROSTER (OPTION)** MT 625 H COMFORT 75K ST5

**HYDRAULIC MOVEMENT NEUTRALISATION**

When driving on the road, it is highly recommended (mandatory in Germany) that you cut-off all the hydraulic movements. The indicator lamp shows when it is in use.

**"LIFT TRUCK STATIONARY" EXHAUST PURIFICATION**

◁ 3 - MAINTENANCE: OCCASIONAL MAINTENANCE

**AUTOMATIC EXHAUST PURIFICATION DEACTIVATION**

**⚠ IMPORTANT ⚠**

*Disabling the automatic exhaust purification remains a function that is only to be used in case of necessity (confined or unventilated space, etc.).*

By default, the automatic exhaust purification is activated each time the lift truck is started.

- To deactivate the automatic exhaust purification, hold down the bottom of the switch. The indicator lamp lights up and an audible signal confirms deactivation.
- To reactivate the automatic exhaust purification hold down the bottom of the switch again. The indicator lamp goes out to confirm reactivation.

| EXHAUST PURIFICATION MANAGEMENT | | | |
|---|---|---|---|
| INDICATIONS | ACTIONS | | |
| + 1 short sound alarm.<br>Moderate soot level. | Indicator lamp comes on.<br>Preferably wait until automatic purification is completed before switching off the ignition. | Or | Activate "lift truck stationary" exhaust purification (◁ 3 - MAINTENANCE: OCCASIONAL MAINTENANCE). |
| + + 1 short sound alarm.<br>Moderate soot level, automatic purification disabled. | Enable automatic purification as soon as possible. | Or | Activate "lift truck stationary" exhaust purification (◁ 3 - MAINTENANCE: OCCASIONAL MAINTENANCE). |
| + + permanent sound alarm.<br>High soot level. | Engine speed limited to 1200 rpm, only a "stationary lift truck" purification must be performed (◁ 3 - MAINTENANCE: OCCASIONAL MAINTENANCE). | | |
| + + + permanent sound alarm.<br>Moderate soot level, automatic purification disabled. | | | |
| + + + 1 short sound alarm.<br>Very high soot level, particle filter clogged. | *Reduced lift truck efficiency, shut down the lift truck and contact your dealer.* | | |

https://truckmanualshub.com/

### PARKING BRAKE

To connect the parking brake, press the bottom of the switch. The indicator lamp indicates when it is in use. To disconnect the parking brake, press the top of the switch.

### ATTACHMENT HYDRAULIC LOCKING (OPTION)
**OR**
**BOOM HEAD ELECTROVALVE (OPTION)** MT 625 H COMFORT 75K ST5
**OR**
**BOOOM HEAD ELECTROVALVE + ATTACHMENT HYDRAULIC LOCKING (OPTION)** MT 625 H COMFORT 75K ST5

◁ DESCRIPTION AND USE OF THE OPTIONS

### ATTACHMENT HYDRAULIC CONTROL FORCED OPERATION (OPTION)
MT 625 H COMFORT 75K ST5

◁ DESCRIPTION AND USE OF THE OPTIONS

### BOOM ELECTRICAL PREDISPOSITION (OPTION) MT 625 H COMFORT 75K ST5

◁ DESCRIPTION AND USE OF THE OPTIONS

### TILTING MOVEMENT NEUTRALISATION (OPTION)

Makes it possible to cut off the carriage excavating and dumping movements. The indicator lamp shows when it is in use.

## *10 - ARMREST AND STORAGE*

- Lift the armrest 1 to access the storage.

## *11 - DIAGNOSTIC PLUG*

- Remove the access panel to access the plugs.

https://truckmanualshub.com/

## 12 - FUSES AND RELAYS

A sticker on the inside of the access panel provides a quick indication of the use of the fuse plate's components described below.

- Remove the access panel 1 to access the fuses and relays. Replace a used fuse with a new fuse of the same quality and capacity. Never reuse a repaired fuse.

### IN THE CAB

| | | |
|---|---|---|
| F1 | 5A | Control instrument module. |
| F2 | 5A | Water in fuel sensor.<br>Alternator excitation.<br>Longitudinal stability limiter and warning device.<br>ECM wake-up. |
| F3 | 5A | Anti-theft device predisposition.<br>Diagnostic plug. |
| F4 | 10A | "Transmission" electronic control unit.<br>Seat switch.<br>Telescoping and attachment movement control.<br>Exhaust purification switch.<br>Negative parking brake electrovalve.<br>Hydraulic movement cut-off. |
| F5 | 15A | 12 V plug.<br>Car radio (OPTION). |
| F6 | 10A | Presence of driver on seat.<br>Retraction and boom angle sensors. |
| F7 | 10A | "Hydraulics" electronic control unit. |
| F8 | 5A | Deactivation of aggravating hydraulic movement cut-off. |
| | 7,5A | Deactivation of aggravating hydraulic movement cut-off.<br>Boom head electrovalve (OPTION). ** |
| F9 | 10A | Brake light relay power supply.<br>Reversing light relay power supply.<br>Audible reversing alarm relay power supply. |
| F10 | 2A | Wheel alignment. |
| F11 | 15A | Flashing unit. |
| F12 | 5A | Rear fog lights. |
| F13 | 15A | Working lights on boom switch (OPTION). ** |
| F14 | 7,5A | Rotating beacon light. |
| F15 | 10A | Rear windscreen defrost (OPTION). ** |
| F16 | 7,5A | Not used. ** |
| F17 | 15A | Rear windscreen wiper and windscreen washer.<br>Roof windscreen wiper. |
| F18 | 15A | Front windscreen wiper and windscreen washer. |
| F19 | 30A | Power supply F27-F28-F29-F30. |
| F20 | 20A | Heating. |
| F21 | 3A | Left sidelights. |
| F22 | 3A | Right sidelights. |
| F23 | 15A | Dipped beam headlights. |
| F24 | 15A | Main beam headlights. |
| F25 | 7,5A | Right indicator lights. |
| F26 | 7,5A | Left indicator lights. |
| F27 | 7,5A | Electric power socket on boom head (OPTION). **<br>Boom head electrovalve (OPTION). ** |
| F28 | 10A | Not used. ** |
| F29 | 10A | Pneumatic seat (OPTION). ** |
| F30 | 20A | Front and rear working lights (OPTION). |
| | 25A | Front and rear working lights (OPTION).<br>Working lights on boom (OPTION). ** |
| F31 | 20A | Lighting, horn and indicator switch. |
| F32 | 15A | Hazard warning lights (K4). |
| F33 | 5A | Diagnostic plug.<br>Anti-theft device predisposition. |
| F34 | 7,5A | Warning device.<br>Roof light. ** |
| F35 | 10A | Car radio. ** |
| F36 | 5A | "Hydraulics" electronic control unit power supply. |
| F37 | 10A | Rear windscreen wiper (+) permanent. |
| F38 | 15A | Front windscreen wiper (+) permanent. |
| F39 | 7,5A | Air conditioning compressor (OPTION). ** |
| F40 | 20A | Air conditioning electric fan (OPTION). ** |

* MT 625 H 75K ST5

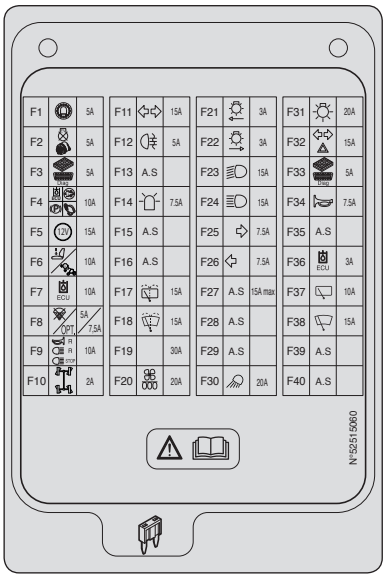


** MT 625 H COMFORT 75K ST5

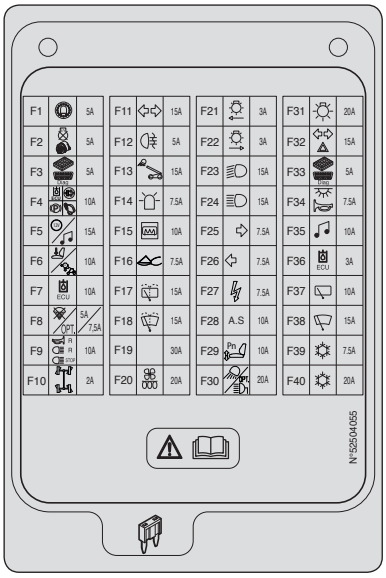

https://truckmanualshub.com/

| | | |
|---|---|---|
| F61 | 2A | Control instrument module power supply. * |
| | | Not used. ** |
| F62 | 2A | Battery power supply (+). * |
| | | Not used. ** |
| F63 | | Free. * |
| | | Not used. ** |
| F64 | | Free. * |
| | | Not used. ** |
| F71 | 2A | Control instrument module power supply. ** |
| F72 | 2A | Battery power supply (+). ** |
| F73 | | Free. ** |
| F74 | | Free. ** |

| | | |
|---|---|---|
| K1 | | Free. * |
| | | Not used. ** |
| K2 | | Reversing lights.<br>Reversing sound alarm. |
| K3 | | Brake lights. |
| K4 | | Free. * |
| | | Working lights on boom (OPTION). ** |
| K5 | | Air conditioning electric fan (OPTION). ** |
| K6 | | Air conditioning compressor (OPTION). ** |
| K7 | | Heating. |
| K8 | | Flashing unit. |
| K9 | | Not used. * |
| | | Free. ** |
| K10 | | Air conditioning (OPTION). ** |

* MT 625 H 75K ST5

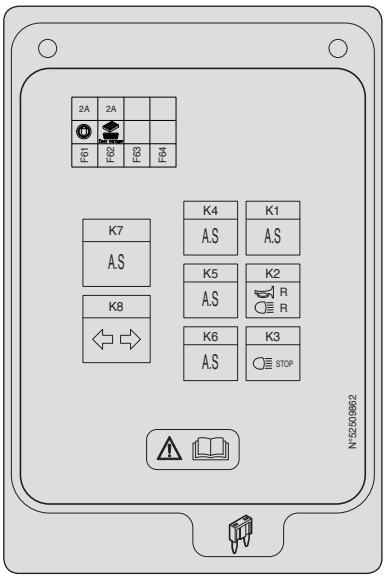


** MT 625 H COMFORT 75K ST5

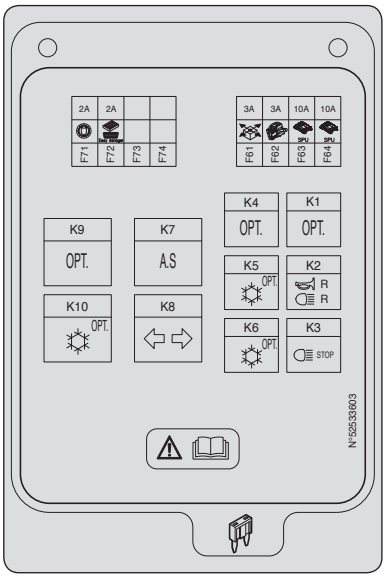


## *IN THE ENGINE COMPARTMENT*

- Open the engine bonnet, remove cover 1 to gain access to the fuses and relays. Replace a used fuse with a new fuse of the same quality and capacity. Never reuse a repaired fuse.

| | | |
|---|---|---|
| F41 | 20A | Engine ECU power supply. |
| F42 | 60A | Ignition switch. |
| F43 | 80A | Alternator. |
| F44 | 50A | Power supply for fuses in the cab. |
| F45 | 30A | Starter relay power supply. |
| F46 | 40A | Engine preheat.<br>Fuel decongealant (OPTION). |
| F51 | 5A | Air flow sensor.<br>Engine EGR valve. |
| F52 | 3A | Dashboard power supply. |
| F53 | 5A | Start relay control K22.<br>Engine ECU information. |
| F54 | 5A | Water in fuel sensor power supply. |
| F55 | 5A | Engine ECU control power supply. |

| | | |
|---|---|---|
| K20 | | Engine preheat. |
| K21 | | Engine ECU power supply. |
| K22 | | Starter control. |

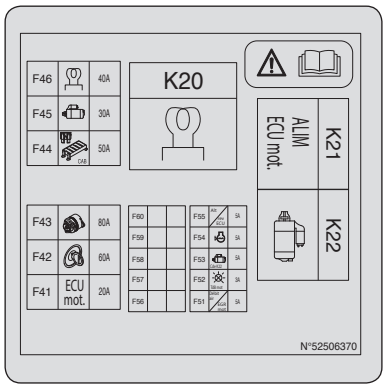

https://truckmanualshub.com/

## 13 - CIGARETTE LIGHTER

For 12 V appliance and max. amperage 15A.

## 14 - LIGHTING, HORN AND INDICATOR SWITCH

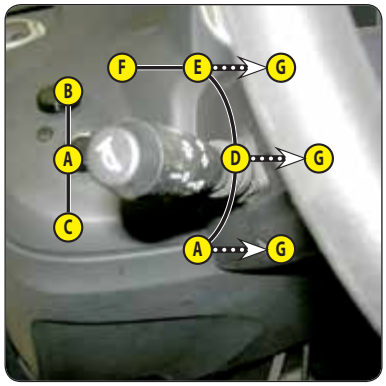


The switch controls the visual and sound alarms.

- A - All lights are off, the indicator lights do not flash.
- B - The right hand indicator lights flash.
- C - The left hand indicator lights flash.
- D - Sidelights and rear lights on.
- E - The dipped headlights and the rear lights are on.
- F - The main beam headlights and the rear lights are on.
- G - Headlight signalling.

Pressing the end of the switch sounds the horn.

NOTE: Positions D - E - F - G can be used without switching on the ignition.

## 15 - FRONT AND REAR WINDSCREEN WIPER SWITCH

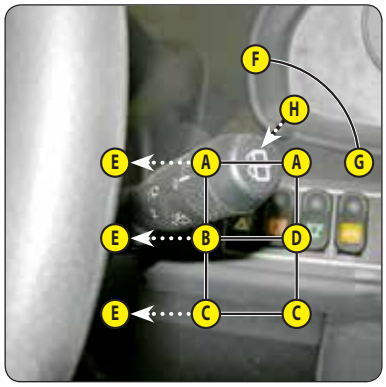


FRONT WINDSCREEN WIPER

- A - Front windscreen wiper stop.
- B - Front windscreen wiper low speed.
- C - Front windscreen wiper high speed.
- D - Front windscreen wiper intermittent.
- E - Front windscreen washer by pressing.

REAR WINDSCREEN WIPER

- F - Rear windscreen wiper stop.
- G - Rear windscreen wiper.
- H - Rear windscreen washer by pressing.

## 16 - FUNCTION FILES

These files contain, among other things, the description of the hydraulic controls and the load charts for the attachments used on the lift truck.

https://truckmanualshub.com/

## 17 - HYDRAULIC CONTROLS

**⚠ IMPORTANT ⚠**

*Do not attempt to alter the hydraulic system pressure by interfering with the pressure regulating valve. In the event of suspected malfunction, contact your dealer. ANY ALTERATION MAY RENDER THE WARRANTY NULL AND VOID.*

*Use the hydraulic controls gently without jerking, to avoid incidents caused by shaking the lift truck.*

NOTE: When driving on the road, it is highly recommended (mandatory in Germany) that all the hydraulic movements are cut off (◁ SWITCHES).

### HYDRAULIC CONTROLS ACTIVATION

To avoid inadvertent operation of the hydraulic lifting, tilting, telescoping and attachment controls, a safety device is added to the lift truck (SECOND FIT).

| FIRST FIT: NO HYDRAULIC CONTROLS ACTIVATION | |
|---|---|
| 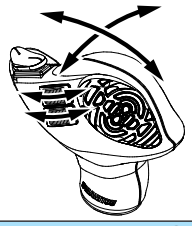 | -Place your hand on the lever and perform the hydraulic movement. |
| **SECOND FIT: HYDRAULIC CONTROLS ACTIVATION** | |
| 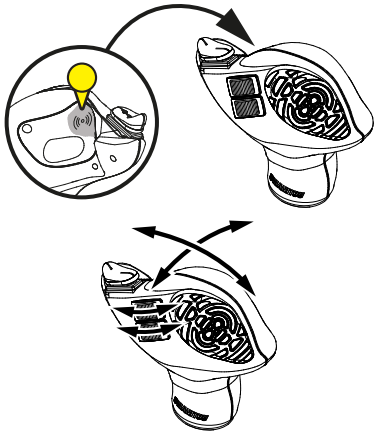 | -Place your hand on the lever, activate the hydraulic controls by contact on the capacitive sensor and perform the hydraulic movement. |
| -Hydraulic controls activation is maintained on a timer while the lift truck is being used.<br>-If necessary, reactivate the hydraulic controls. | |

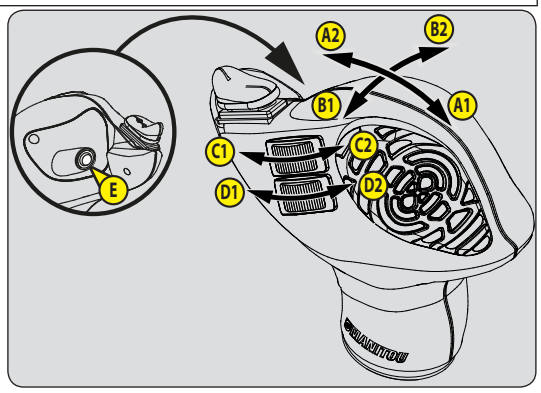


**A1 - LIFTING**

**A2 - LOWERING**

**B1 - EXCAVATION**

**B2 - DUMP**

**C1 - TELESCOPE EXTENSION**

**C2 - TELESCOPE RETRACTION**

**D1 - ATTACHMENT**

**D2 - ATTACHMENT**

**E - BOOM HEAD ELECTROVALVE (OPTION)** MT 625 H COMFORT 75K ST5

◁ DESCRIPTION AND USE OF THE OPTIONS

https://truckmanualshub.com/

## ADJUSTMENT OF ATTACHMENT HYDRAULIC FLOW RATE

- Switch on lift truck ignition.
- Select the attachment circuit hydraulic flow screen % -888 with the scroll button . In turn the screen displays the hydraulic flow stored in the memory of circuit B (without "-" sign) and of circuit A (with "-" sign).
- Press the button for two seconds, the screen ruP:888 will appear on the lower screen display.
- Turn button C forwards to select a hydraulic flow for circuit B of between 10% and 100%.
- Hold button C at the desired flow and confirm with the button.
- The screen rdn:888 appears on the lower screen display.
- Turn button C backwards to select a hydraulic flow for circuit A between -10% and -100%.
- Hold button C at the desired flow and confirm with the button.
- The hour meter screen 88888.8h appears on the lower display screen, confirming that adjustment is completed.

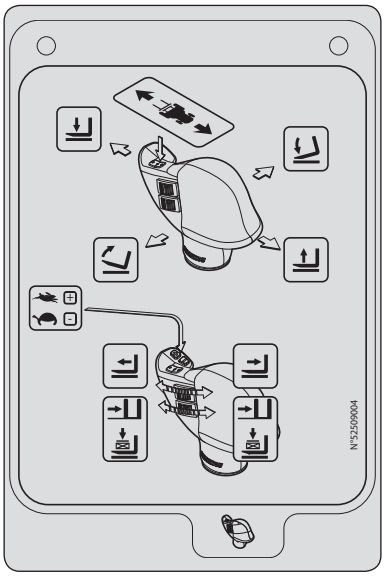


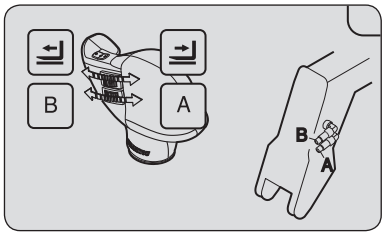


## SPEED SELECTION

Speeds can be selected while driving.

Buttons 1 and 2 are used to select a speed.

- HIGH SPEED: For driving on the road. Press button 1, the high speed indicator lamp comes on .
- SLOW SPPED: For handling operations. Press button 2, the slow speed indicator lamp comes on .

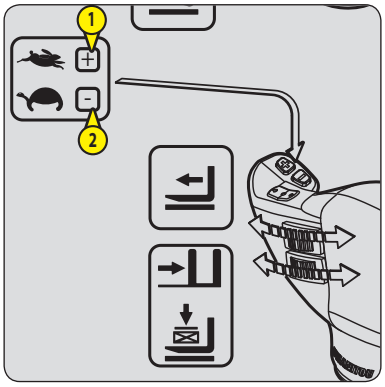

https://truckmanualshub.com/

## 18 - ACCELERATOR PEDAL

## 19 - SERVICE BRAKE PEDAL AND TRANSMISSION CUT-OFF

The pedal acts on the front wheels by means of a hydraulic brake system to slow down and stop the lift truck. During free travel it enables the transmission to be cut off progressively thus allowing a gradual approach (delicate handling) with all the engine power.

## 20 - FORWARD/NEUTRAL/REVERSE GEAR SELECTION

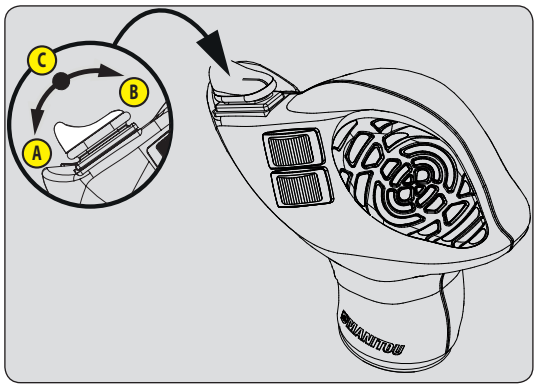


When changing the direction of travel, the lift truck should be travelling at slow speed and not accelerating.

FORWARD: Push the switch forward (position A).

REVERSE: Tilt the switch backwards (position B). A reversing light and audible reversing alarm indicate that the lift truck is travelling in reverse.

NEUTRAL: If indicator lamps ▲ N or N ▼ are flashing, move the forward/reverse selector back through neutral (position C).

**SAFETY FOR MOVING THE LIFT TRUCK**

Authorisation to move the lift truck is controlled by an electronic module. The operator must observe the following sequence of operations to move the truck forwards or backwards:

- 1 - sit down correctly in the driver's seat,
- 2 - release the parking brake,
- 3 - engage forward or reverse.

To stop the forklift truck, the following sequence must be observed:

- 1 - set the forward/reverse selector to neutral,
- 2 - engage the parking brake,
- 3 - get out of the lift truck.

- If the operator leaves the driver's cab with forward or reverse engaged, the screen - SEAt - will appear and generate a sound alarm for two seconds. During this time, the operator can sit back down in the seat and continue advancing or reversing. When this time is exceeded, the transmission will switch to neutral and the indicator lamps ▲ N or N ▼ will flash. The operator must sit back down and pass the forward/reverse selector back through neutral.

**SAFETY FOR MOVING THE LIFT TRUCK**

The operator must observe the following sequence to move the truck forwards or backwards:

- 1 - sit down correctly in the driver's seat,
- 2 - release the parking brake,
- 3 - engage forward or reverse.

https://truckmanualshub.com/

## 21 - STEERING SELECTION

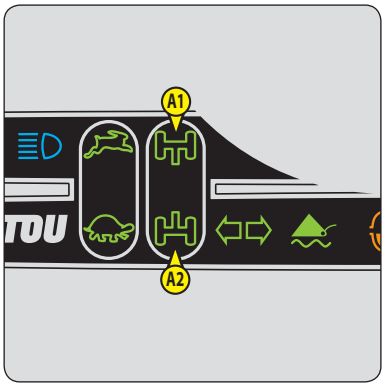


### A - GREEN WHEEL ALIGNMENT INDICATOR LAMPS

**⚠ IMPORTANT ⚠**

*Before selecting one of the three steering possibilities, align the 4 wheels in relation to the lift truck axis.*
*Never change the steering mode whilst driving.*

These green indicator lamps come on to indicate the alignment of the wheels in relation to the lift truck. The A1 indicator lamp for the front wheels and the A2 indicator lamp for the rear wheels.

### B - STEERING SELECTION LEVER

- B1 - Front drive wheels (road traffic).
- B2 - Front and rear drive wheels in the opposite direction (small turning circle).
- B3 - Front and rear drive wheels in the same direction (crabwise movement).

CHECKING WHEEL ALIGNMENT

**⚠ IMPORTANT ⚠**

*Before travelling on a public road, it is necessary to check the rear wheel alignment and to travel on front drive wheels.*
*Checking the rear wheel alignment must be performed regularly using the green indicator lamps when the forklift truck is in motion.*
*In case of technical faults, consult your dealer.*

- Place the steering selection lever B in position B2 (short turning circle).
- Turn the steering wheel and bring the rear wheels into alignment until the A2 indicator lamp comes on.
- Place the steering selection lever B in position B1 (road traffic).
- Turn the steering wheel and align the front wheels until indicator lamp A1 lights up.

https://truckmanualshub.com/

## 22 - HEATER CONTROL

### A - FAN CONTROL

This 3-speed control allows the air to be ventilated through the air vents.

### B - TEMPERATURE CONTROL

Adjusts the temperature inside the cab.

- B1 - The fan pumps in the air at ambient temperature.
- B2 - The fan pumps in warm air.

The intermediate positions allow the temperature to be adjusted.

## 23 - AIR CONDITIONING CONTROLS (AIR CONDITIONING OPTION)

MT 625 H COMFORT 75K ST5

**IMPORTANT**

*The air conditioning only works if the lift truck has been started.*
*When using your air conditioning, it is essential to work with the cab closed.*
*In winter: So as to ensure that the air conditioning unit is correctly operated and completely efficient, start up the compressor once a week, even for a short period of time, in order to lubricate the internal seals.*
*In cold weather: Warm the engine before switching on the compressor, in order to allow the coolant that has collected in the liquid state at the lowest point of the compressor's circuit to turn into gas under the effect of the heat given off by the engine, as the compressor is liable to be damaged by coolant in the liquid state.*
*If your air conditioning does not seem to be working correctly, have it examined by your dealer.*
*Never try to repair any faults yourself.*

### A - FAN CONTROL

This 3-speed control allows the air to be ventilated through the air vents.

### B - TEMPERATURE CONTROL

Adjusts the temperature inside the cab.

- B1 - The fan pumps in cold air.
- B2 - The fan pumps in warm air.

The intermediate positions allow the temperature to be adjusted.

### C - AIR CONDITIONING CONTROL

This control with a pilot light allows the air conditioning unit to be switched on.

HEATING MODE

The controls must be adjusted in the following way:

- C - Control with pilot light off.
- B - At the desired temperature.
- A - At the desired speed: 1, 2 or 3.

AIR CONDITIONING MODE

The controls must be adjusted in the following way:

- C - Control with pilot light on.
- B - At the desired temperature.
- A - At the desired speed: 1, 2 or 3.

DEMISTING MODE

The controls must be adjusted in the following way:

- C - Control with pilot light on.
- B - At the desired temperature.
- A - At speed 3.

For optimum effectiveness, close the heating ventilators.

https://truckmanualshub.com/

## 24 - HEATING VENTS

These swivelling heating vents, which can be shut off, allow you to direct and adjust the flow inside the cab.

## 25 - DEMIST VENTS

These vents allow the windscreen and side windows to be demisted. For optimum efficiency, close the heating vents.

## 26 - LEVEL INDICATOR

Enables the operator to check that the lift truck is in the horizontal position.

## 27 - DOOR LOCK

Two keys are provided with the lift truck to enable the cabin to be locked.

## 28 - DOOR WINDOW OPENING HANDLE

## 29 - DOOR WINDOW RELEASE BUTTON

## 30 - HANDLE FOR REAR WINDOW OPENING

EMERGENCY EXIT

Use the rear window as an emergency exit, if it is impossible to leave the cab by the door.

## 31 - REAR STORAGE SPACE

MT 625 H COMFORT 75K ST5

## 32 - DOCUMENT STORAGE NET

Make sure that the operator's manual is in the right place, i.e. in the document holder net.

NOTE: An OPTIONAL waterproof document-holder is available.

## 33 - STEERING WHEEL ADJUSTMENT LEVER (OPTION)

MT 625 H COMFORT 75K ST5

This handle enables the angle and height of the steering wheel to be adjusted.

- Pull the handle 1 backwards.
- Adjust the steering wheel to the desired position.
- Push the knob back to lock the steering wheel in position.

https://truckmanualshub.com/

## 34 - FRONT HEADLIGHTS

- A - Left front indicator light.
- B - Left front dipped beam headlight.
- C - Left front main beam.
- D - Left front side light.
- E - Right front indicator light.
- F - Right front dipped beam headlight.
- G - Right front main beam headlight.
- H - Right front side light.

## 35 - REAR LIGHTS

- A - Left rear indicator light.
- B - Left rear brake light.
- C - Left rear light.
- D - Rear fog light.
- E - Reversing light.
- F - Right rear light.
- G - Right rear brake light.
- H - Right rear indicator light.

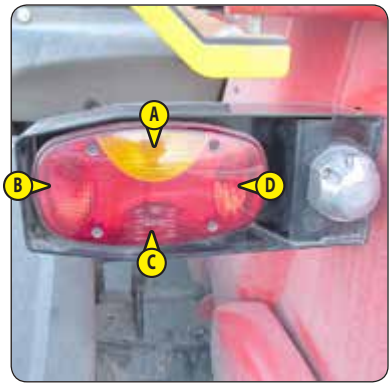


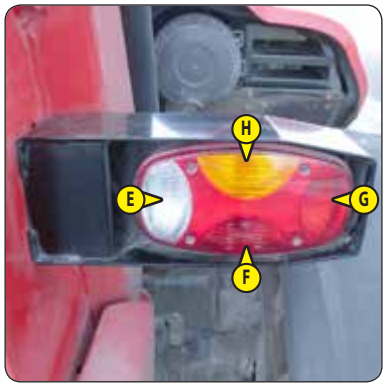


## 36 - ROTATING BEACON LIGHT (DEPENDING ON ASSEMBLY)

The magnetic rotating beacon light must be clearly visible on the roof of the cab and plugged into socket 1.

## 37 - ROOF LIGHT (DEPENDING ON ASSEMBLY)

## 38 - ROOF-SIDE WINDSCREEN WIPER SWITCH (DEPENDING ON ASSEMBLY)

## 39 - SUN VISOR

STANDARD MT 625 H COMFORT 75K ST5
OPTION MT 625 H 75K ST5

https://truckmanualshub.com/

## 40 - BOOM SAFETY WEDGE

**IMPORTANT**

*Only use the wedge supplied with the lift truck.*

The lift truck is equipped with a boom safety wedge which must be installed on the rod of the lifting cylinder when working beneath the boom (◁ 1 - OPERATING AND SAFETY INSTRUCTIONS).

## 41 - FUEL TANK

As far as possible, keep the fuel tank well filled in order to minimise condensation due to the atmospheric conditions.

**IMPORTANT**

*Never smoke or approach with a flame during filling operations or when the tank is open.*
*Never refill while engine is running.*

- If necessary, add diesel (◁ 3 - MAINTENANCE: LUBRICANTS AND FUEL).
- Remove cap 1.
- Fill the fuel tank with clean diesel filtered through the filler port.
- Refit the cap.
- Visually check that there is no leakage in the tank and pipes.

## 42 - "A-B-C-D-E" MARKING ON BOOM

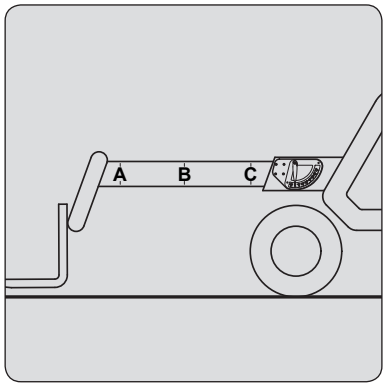


The marking indicates the outreach of the boom and therefore improves reading of the load charts.

## 43 - ANGULAR SECTOR ON BOOM

The angular sector displays the boom angle, and thus improves the reading of the load charts.

https://truckmanualshub.com/

# TOWING DEVICE

1 - TOWING PIN ..... 2-41
2 - REAR ELECTRIC SOCKET (DEPENDING ON ASSEMBLY) ..... 2-41
3 - COUPLING FITTING (OPTION) ..... 2-41
4 - REAR-VIEW MIRROR (OPTION) ..... 2-41

**⚠ IMPORTANT ⚠**

*Do not tow a trailer or an attachment that is not in perfect working condition.*
*Using a trailer in poor condition may affect the lift truck's steering and braking, and hence the safety of the assembly.*
*If a third party helps in coupling or uncoupling the trailer, this person must be permanently visible to the driver and wait until the lift truck has stopped, the handbrake is on and the I.C. engine is switched off before performing the operation.*

Located at the rear of the lift truck, this device is used to couple a trailer. Capacity is limited for each lift truck by the authorised gross vehicle weight (AGVW), tractive effort and maximum vertical force on the coupling point. This information is given on the manufacturer's plate fixed to each lift truck (◁ IDENTIFICATION OF THE LIFT TRUCK).

- To use a trailer, see current regulations in your country (maximum running speed, braking, maximum weight of trailer, etc.).
- Verify the trailer's condition before using it (tyre condition and pressures, electrical connection, hydraulic hose, brake system…).

NOTE: Our tractor type-approved lift trucks are not compatible for use with trailers fitted with the ISO7638 socket.

https://truckmanualshub.com/

## 1 - TOWING PIN

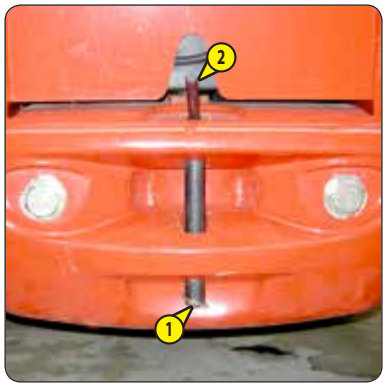


**IMPORTANT**

*Be careful not to get your fingers caught or crushed during this operation.*
*Do not forget to put the cotter pin back in place.*
*When uncoupling, make sure that the trailer is supported independently.*

**COUPLING AND UNCOUPLING THE TRAILER**

- To couple the trailer, position the lift truck as close as possible to the trailer ring.
- Apply the handbrake on and switch off the engine.
- Remove the pin 1, lift the towing pin 2 and place or remove the trailer ring.

## 2 - REAR ELECTRIC SOCKET (DEPENDING ON ASSEMBLY)

Connect the male plug to the female socket 1 on the lift truck and make sure the lights of the trailer or the light bar are working properly.

## 3 - COUPLING FITTING (OPTION)

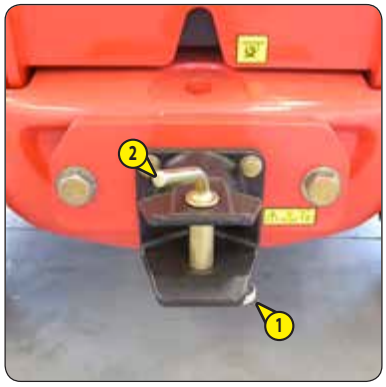


**IMPORTANT**

*Be careful not to get your fingers caught or crushed during this operation.*
*Do not forget to put the cotter pin back in place.*
*When uncoupling, make sure that the trailer is supported independently.*

**COUPLING AND UNCOUPLING THE TRAILER**

- To couple the trailer, position the lift truck as close as possible to the trailer ring.
- Switch off the engine.
- Remove the pin 1, lift the towing pin 2 and place or remove the trailer ring.

## 4 - REAR-VIEW MIRROR (OPTION)

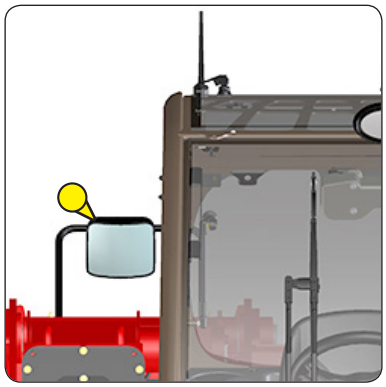

The rear-view mirror allows the lift truck to approach the trailer ring more precisely.

https://truckmanualshub.com/

# DESCRIPTION AND USE OF THE OPTIONS


1 - PREHEAT ROD ..... 2-42
2 - MODCOD ANTI-THEFT SYSTEM ..... 2-42
3 - MODCLE ANTI-START SYSTEM ..... 2-43
4 - LICENSE PLATE LIGHT ..... 2-43
5 - BOOM ELECTRICAL PREDISPOSITION ..... 2-43
6 - EXTERIOR DRAIN-BACK ..... 2-43
7 - WATERPROOF DOCUMENT HOLDER ..... 2-44
8 - WINDSCREEN GRILL ..... 2-44
9 - ATTACHMENT HYDRAULIC LOCKING ..... 2-44
10 - BOOM HEAD ELECTROVALVE ..... 2-45
11 - BOOM HEAD ELECTROVALVE + HYDRAULIC ATTACHMENT LOCKING ..... 2-45
12 - ATTACHMENT HYDRAULIC CONTROL FORCED OPERATION ..... 2-46
13 - ENGINE SPEED REGULATOR ..... 2-46
14 - SPEED LIMITER ..... 2-46
15 - LIFTING RING ON SINGLE CARRIAGE ..... 2-47
16 - CAR STEREO ..... 2-47
17 - INSIDE REAR-VIEW MIRROR ..... 2-47
18 - TELEPHONE HOLDER ..... 2-47
19 - REFLECTIVE BANDS ..... 2-47
20 - FUEL DECONGEALANT ..... 2-47


## 1 - PREHEAT ROD

Enables the engine block to be kept warm during prolonged periods of stoppage and thus improves engine starting.

**SUPPLY CHARACTERISTICS OF PREHEATING SYSTEM:**

- Rated power supply voltage range: 110-120 V; 60 Hz.
- Power: 600 W.
- Class 1 equipment.
- Equipment can only be connected to TT or TN supply diagrams.
- Installation category 2.

**ENVIRONMENTAL CONDITIONS FOR USE:**

- Maximum ambient temperature for using preheat: +77°F (+25°C).
- Pollution level 2.

**CONDITIONS FOR CONNECTION AND USE OF PREHEATING:**

- The preheat system should not be used for an external ambient temperature higher than +77°F (+25°C).
- It is essential that the power supply to the preheating system:
  - Is effected with a cable that conforms to the installation standards in force and contains a protective earth conductor.
  - Contains an appropriate sectioning system.
  - Incorporates an appropriate safety system against short circuits (fuses or circuit breaker) and a differential circuit breaker with 30 mA sensitivity.
- Only connect to and disconnect from the power supply while the unit is switched off and the engine is stopped.

## 2 - MODCOD ANTI-THEFT SYSTEM

**OPERATION**

- Switch on lift truck ignition, red LED 1 will flash.
- Enter your user code followed by "V" to validate, green LED 2 will light.
- Start the lift truck within the next 60 seconds; otherwise the anti-theft system will be reactivated and red LED 1 will flash.

NOTE: If you make a mistake when entering the code, press key "A" to cancel and re-enter the code in full. If you wait more than 5 seconds between key presses, code entry is abandoned, the anti-theft system is reactivated and the red LED will flash.

https://truckmanualshub.com/

## 3 - MODCLE ANTI-START SYSTEM

**OPERATION**

- Switch on lift truck ignition, red LED 1 will flash.
- Apply key 2 to its base 3, and withdraw it as soon as the system emits a continuous sound signal, and LED 1 turns green.
- Start the lift truck within the next 20 seconds; otherwise the anti-theft system will be reactivated and red LED 1 will flash.

NOTE: You can restart the lift truck within 20 seconds of stopping it; after this time, the anti-start system reacts and red LED 1 flashes.

## 4 - LICENSE PLATE LIGHT

## 5 - BOOM ELECTRICAL PREDISPOSITION

MT 625 H COMFORT 75K ST5

Enables an electrical function to be used at the head of the boom.

**OPERATION**

- Set switch 1 to position A to activate the predisposition, the indicator lamp comes on to show that it is activated.

## 6 - EXTERIOR DRAIN-BACK

Enables connection of an attachment for which drain-back is required.

https://truckmanualshub.com/

## 7 - WATERPROOF DOCUMENT HOLDER

## 8 - WINDSCREEN GRILL

**DESCRIPTION**

The windscreen grill provides additional protection for the operator from any external elements spattered on the windscreen.
This grill must be removable from inside the cab to enable an emergency exit.

**EMERGENCY EXIT**

- After breaking the windscreen with the emergency hammer, push (with force) on the windscreen grill at A to remove it.

## 9 - ATTACHMENT HYDRAULIC LOCKING

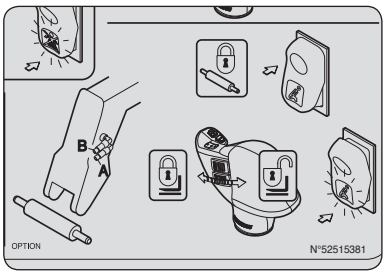


Enables the attachment to be locked onto the carriage and a hydraulic attachment to be used by the same hydraulic circuit.

ATTACHMENT LOCKING CONTROL

- Put tap 1 in position A and press switch 2 at position B (indicator lamp on).
- Push switch 3 forward to lock the attachment and backward to release it.

**⚠ IMPORTANT ⚠**

*After locking the attachment, return switch 2 to position A (indicator lamp off) to prevent accidental unlocking of the attachment.*

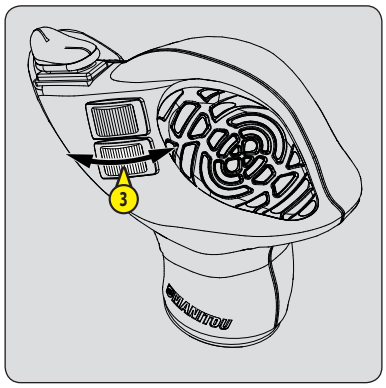


HYDRAULIC ATTACHMENT CONTROL

- Put the tap in position B and press switch 2 at position B (indicator lamp on).
- Push switch 3 forward or backward.

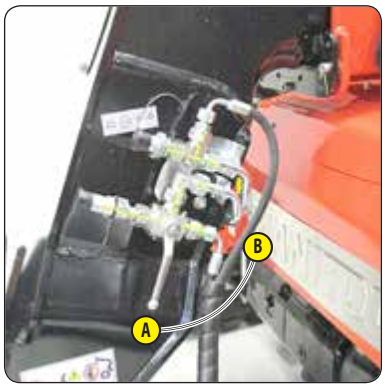

https://truckmanualshub.com/

## 10 - BOOM HEAD ELECTROVALVE

MT 625 H COMFORT 75K ST5

Enables use of two hydraulic functions on the attachment circuit.

**⚠ IMPORTANT ⚠**

*To facilitate connection of the quick couplers, decompress the hydraulic circuit by pressing button 1 on the electrovalve.*

ATTACHMENT LINE A1/B1 CONTROL

- Put switch 1 to position A (indicator lamp off).
- Push switch 2 forward or backward.

ATTACHMENT LINE A2/B2 CONTROL

- Put switch 1 to position B (indicator light on) and hold down button 3.
- Push switch 2 forward or backward.

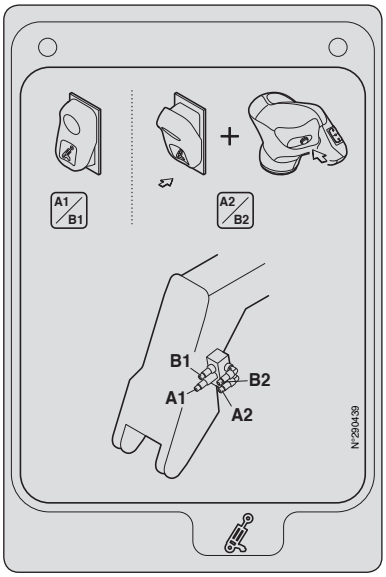

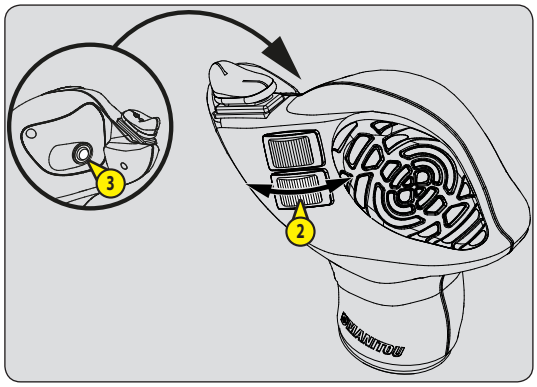


## 11 - BOOM HEAD ELECTROVALVE + HYDRAULIC ATTACHMENT LOCKING

MT 625 H COMFORT 75K ST5

Enables the use of a hydraulic function and hydraulic locking of the attachment on the attachment circuit.

**⚠ IMPORTANT ⚠**

*To facilitate connection of the quick couplers, decompress the hydraulic circuit by pressing button 1 on the electrovalve.*

ATTACHMENT LINE A1/B1 CONTROL

- Put switch 1 to position A (indicator lamp off).
- Push switch 2 forward or backward.

ATTACHMENT A2/B2 LOCKING CONTROL

- Put switch 1 to position B (indicator light on) and hold down button 3.
- Push switch 2 forward to lock the attachment and backward to release it.

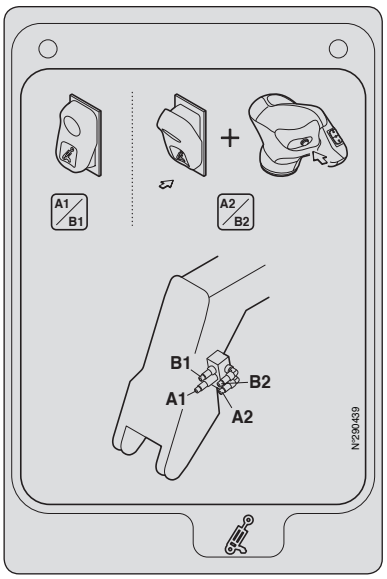

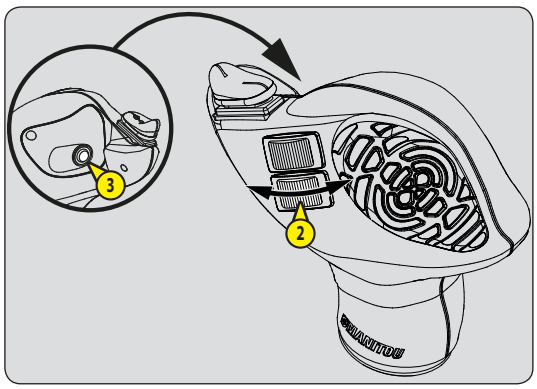

https://truckmanualshub.com/

## 12 - ATTACHMENT HYDRAULIC CONTROL FORCED OPERATION

MT 625 H COMFORT 75K ST5

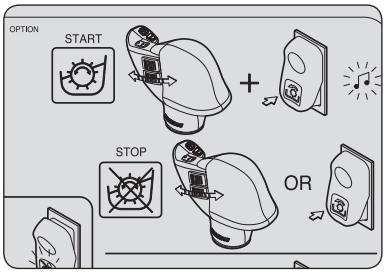


**⚠ IMPORTANT ⚠**

*This OPTION must only be used with an attachment requiring continuous hydraulic movement, such as a brush, feeder bucket, mixer, spray etc. It is strictly forbidden for use in handling operations and all other applications (winch, crane jib, crane jib with winch, hook, etc.).*

**CONTINUOUS HYDRAULIC MOVEMENT OF THE ATTACHMENT**

- Simultaneously hold button 1 in the forward or backward position (according to the type of attachment) and switch 2 in position B (indicator light on). An audible alarm will sound when activated. Release button 1 and switch 2.
- To stop the movement, press again on the bottom of switch 1, or operate button 2.

NOTE: If the operator leaves the driver's cab, the continuous hydraulic movement will automatically stop and must be restarted.

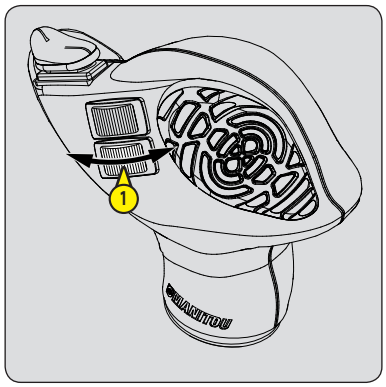

## 13 - ENGINE SPEED REGULATOR

MT 625 H COMFORT 75K ST5

**⚠ IMPORTANT ⚠**

*This option cannot under any circumstances be used while driving on the road.*
*Caution when driving, sudden acceleration or braking when you use button 2.*

The regulator controls the engine speed, increases the hydraulic flow and therefore increases the speed of all the movements.

- Adjust the engine speed with lever 1.

Used for an attachment requiring continuous hydraulic movement (brush, feeder bucket, mixer, spray).

## 14 - SPEED LIMITER

MT 625 H COMFORT 75K ST5

**⚠ IMPORTANT ⚠**

*This option cannot under any circumstances be used while driving on the road.*

Only accessible in TORTOISE MODE, the speed limiter limits the speed from 0,25 to 7,5 mph (0,4 to 12 km/h) by turning the button 1.

Use for an attachment requiring a constant speed of travel (brush, feeder bucket, spray).

- After having switched off the ignition with the ignition key turn button 1 to zero to reinitialise this option then reset to the desired value.

https://truckmanualshub.com/

## 15 - LIFTING RING ON SINGLE CARRIAGE

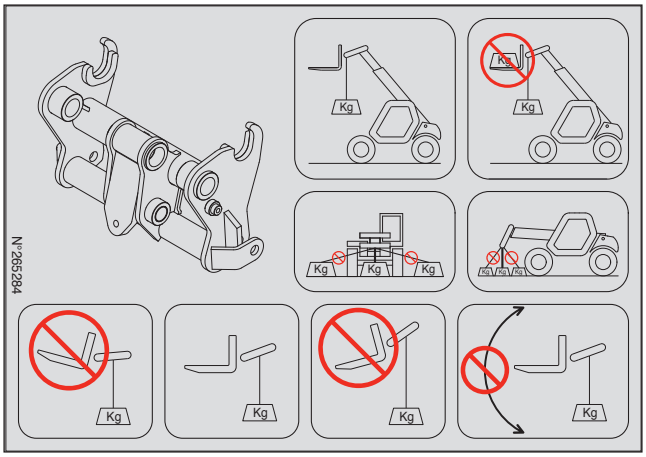


### CONDITIONS OF USE

**⚠ IMPORTANT ⚠**

*Follow the instructions given in your lift truck's instruction manual (◁ 1 - OPERATING AND SAFETY INSTRUCTIONS FOR HANDLING LOADS), and in addition those given below.*

- The lifting ring must be used WITHOUT FORKS AND ATTACHMENTS, but the angle of inclination of the carriage must be same as when the forks are used in the horizontal position.
- Check the maximum permitted angle, which is 45°.
- Do not change the angle of the carriage while using the lifting ring.
- The lifting hook, the chains and slings shall have a minimum capacity of 6614 lbs (3000 kg) with a safety coefficient of 4 in relation to breakage.

### LOAD CHARTS AND FUNCTION SHEETS

**⚠ IMPORTANT ⚠**

*The load charts are defined for use without forks and without attachments.*

## 16 - CAR STEREO

## 17 - INSIDE REAR-VIEW MIRROR

## 18 - TELEPHONE HOLDER

## 19 - REFLECTIVE BANDS

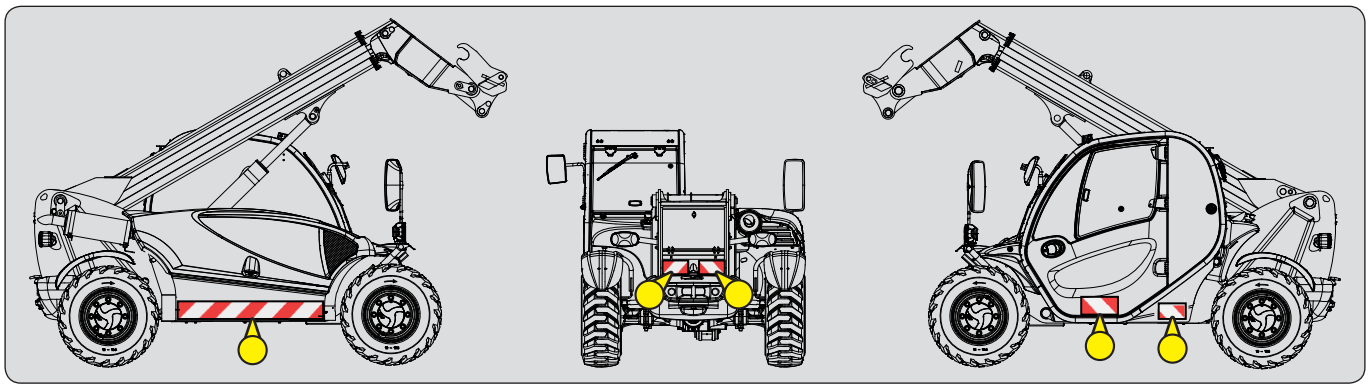

## 20 - FUEL DECONGEALANT

The paraffin particles found naturally in diesel crystallise at low temperatures. The fuel decongealant helps to limit accumulation in the filter.

https://truckmanualshub.com/

https://truckmanualshub.com/

# 3 - MAINTENANCE

https://truckmanualshub.com/

# 3 - MAINTENANCE


ORIGINAL MANITOU SPARE PARTS AND EQUIPMENT 3-3

FORKLIFT TRUCK MAINTENANCE 3-4

DAILY AND WEEKLY MAINTENANCE 3-4

MANDATORY FIRST 500 HOURS OR 6 MONTHS SERVICE 3-5

PERIODIC SERVICE 3-6

OCCASIONAL MAINTENANCE AND OPERATION 3-8

FILTER ELEMENTS AND BELTS 3-9

LUBRICANTS AND FUEL 3-10

➲ 10H - DAILY SERVICE OR EVERY 10 HOURS OF SERVICE 3-12

➲ 50H - WEEKLY SERVICE OR EVERY 50 HOURS OF SERVICE 3-14

➲ ❶ 500H - PERIODIC SERVICE - EVERY 500 HOURS OF SERVICE OR 1 YEAR 3-20

➲ ❷ 1000H - PERIODIC SERVICE - EVERY 1000 HOURS OF SERVICE OR 2 YEARS 3-24

➲ ❸ 2000H - PERIODIC SERVICE - EVERY 2000 HOURS OF SERVICE OR 4 YEARS 3-30

➲ ❹ 3000H - PERIODIC SERVICE - EVERY 3000 HOURS OF SERVICE OR 6 YEARS 3-33

➲ OCCASIONAL MAINTENANCE 3-34

➲ OCCASIONAL OPERATION 3-38

https://truckmanualshub.com/

# ORIGINAL MANITOU SPARE PARTS AND EQUIPMENT

**OUR LIFT TRUCKS MUST BE SERVICED USING ORIGINAL MANITOU PARTS.**

## BY ALLOWING THE USE OF NON ORIGINAL MANITOU PARTS, YOU RISK:

**⚠ IMPORTANT ⚠**

***THE USE OF COUNTERFEIT PARTS OR COMPONENTS NOT APPROVED BY THE MANUFACTURER, MEANS YOU LOSE THE BENEFIT OF THE CONTRACTUAL GUARANTEE.***

- Legally - to be held responsible in the event of an accident.
- Technically - to cause operating malfunctions or shorten the life of the lift truck.

## BY USING ORIGINAL MANITOU PARTS FOR MAINTENANCE OPERATIONS, YOU BENEFIT FROM OUR KNOW-HOW

Through its network, MANITOU provides the user with,

- Know-how and competence.
- The guarantee of high-quality work.
- Original replacement parts.
- Help with preventive maintenance.
- Efficient help with diagnosis.
- Improvements due to experience feedback.
- Operator training.
- Only the MANITOU network has detailed knowledge of the design of the lift truck and therefore the best technical ability to provide maintenance.

**⚠ IMPORTANT ⚠**

***ORIGINAL REPLACEMENT PARTS ARE DISTRIBUTED EXCLUSIVELY BY MANITOU AND ITS DEALER NETWORK.***

***The dealer network list is available on the MANITOU web site: www.manitou.com***

https://truckmanualshub.com/

# FORKLIFT TRUCK MAINTENANCE

## DAILY AND WEEKLY MAINTENANCE

**⚠ IMPORTANT ⚠**

*THE OPERATOR IS AUTHORISED TO CARRY OUT THIS MAINTENANCE.*

These maintenance operations enable the operator to maintain the lift truck in a clean and safe condition.

## MANDATORY FIRST 500 HOURS OR 6 MONTHS SERVICE

**⚠ IMPORTANT ⚠**

*THIS SERVICE MUST BE CARRIED OUT AFTER THE FIRST 500 HOURS OF SERVICE OR WITHIN THE 6 MONTHS FOLLOWING PUTTING THE MACHINE INTO SERVICE (WHICHEVER OCCURS FIRST).*

## PERIODIC SERVICE

**⚠ IMPORTANT ⚠**

*THE PERIODIC MAINTENANCE MUST BE CARRIED OUT BY AN APPROVED PROFESSIONAL FROM THE MANITOU NETWORK.*

**MAINTENANCE SCHEDULE**

This schedule enables the operator to keep up with the periodic service of the lift truck by notifying the total number of hours of operation and the date of the service performed by the professional approved by the MANITOU network.

## OCCASIONAL MAINTENANCE AND OPERATION

These maintenance tasks and operations are to be performed as required for the safety and upkeep of the lift truck.

# DAILY AND WEEKLY MAINTENANCE

## 10H - DAILY SERVICE OR EVERY 10 HOURS OF SERVICE


- CHECK — Lift truck environment ..... 3-12
- CHECK — Engine oil level ..... 3-12
- CHECK — Cooling liquid level ..... 3-12
- CLEAN — Cyclonic pre-filter (option) ..... 3-13


## 50H - WEEKLY SERVICE OR EVERY 50 HOURS OF SERVICE


- CHECK — Alternator/crankshaft belt tension ..... 3-14
- CHECK — Compressor belt tension (Air conditioning option) ..... 3-14
- CHECK — Transfer box oil level ..... 3-14
- CHECK — Tyre pressures ..... 3-14
- CHECK — Wheel nut tightening ..... 3-14
- CHECK — Front axle differential seal ..... 3-15
- CHECK — Rear axle differential seal ..... 3-15
- CHECK — Front wheel reducer seals ..... 3-15
- CHECK — Rear wheel reducer seals ..... 3-15
- CHECK — Brake fluid level ..... 3-15
- CHECK — Boom pad slide pathways ..... 3-15
- CHECK — Hydraulic oil level ..... 3-16
- CHECK — Windscreen washer liquid level ..... 3-16
- CLEAN — Fuel pre-filter ..... 3-16
- CLEAN — Radiator cores ..... 3-17
- CLEAN — Dry air filter cartridge ..... 3-17
- CLEAN — Condenser wiring harness (Air conditioning OPTION) ..... 3-17
- LUBRICATE — General lubrication ..... 3-18
- REPLACE — Engine oil * ..... 3-19
  - REPLACE — Engine oil filter * ..... 3-19


** Only for the first 50 hours of service and then every 500 hours of service or 1 year.*

https://truckmanualshub.com/

# MANDATORY FIRST 500 HOURS OR 6 MONTHS SERVICE

**FIRST 500 HOURS BEFORE THE FIRST 6 MONTHS**

- If the lift truck has reached the first 500 hours of service before the first 6 months have expired, perform both the mandatory service and periodic 500 H service (➪ ❶ 500H - PERIODIC SERVICE - EVERY 500 HOURS OF SERVICE OR 1 YEAR).

**FIRST 6 MONTHS BEFORE THE FIRST 500 HOURS**

- If the lift truck has not completed 500 hours of service in the first 6 months, just carry out the mandatory service.

## ➪ MANDATORY SERVICE


| | | |
|---|---|---|
| - CHECK | Alternator/crankshaft belt tension | 3-14 |
| - CHECK | Compressor belt tension (Air conditioning option) | 3-14 |
| - CHECK | Transfer box oil level | 3-14 |
| - CHECK | Tyre pressures | 3-14 |
| - CHECK | Wheel nut tightening | 3-14 |
| - CHECK | Front axle differential seal | 3-15 |
| - CHECK | Rear axle differential seal | 3-15 |
| - CHECK | Front wheel reducer seals | 3-15 |
| - CHECK | Rear wheel reducer seals | 3-15 |
| - CHECK | Brake fluid level | 3-15 |
| - CHECK | Boom pad slide pathways | 3-15 |
| - CHECK | Hydraulic oil level | 3-16 |
| - CHECK | Windscreen washer liquid level | 3-16 |
| - CLEAN | Fuel pre-filter | 3-16 |
| - CLEAN | Radiator cores | 3-17 |
| - CLEAN | Dry air filter cartridge | 3-17 |
| - CLEAN | Condenser wiring harness (Air conditioning OPTION) | 3-17 |
| - LUBRICATE | General lubrication | 3-18 |
| - CHECK | Hoses and differential pressure hoses for the exhaust particle filter "DPF" ** | 3-23 |
| - CHECK | Exhaust gas recirculation piping "EGR" ** | 3-23 |
| - CHECK | Intake hose ** | 3-23 |
| - CHECK | **Exhaust manifold | 3-23 |
| - CHECK | Fork wear * | 3-23 |
| - CHECK | Safety belt | 3-24 |
| - CHECK | Silentblocks ** | 3-28 |
| - CHECK | Valve lash ** | 3-28 |
| - CHECK | Injectors ** | 3-28 |
| - CHECK | Exhaust gas recirculation cooler "EGR" ** | 3-28 |
| - CHECK | Casing gas recycling valve ** | 3-28 |
| - CHECK | Brake system pressure * | 3-28 |
| - CHECK | Boom pad wear * | 3-28 |
| - CHECK | Condition of wiring harnesses and cables * | 3-28 |
| - CHECK | Lights and signals * | 3-28 |
| - CHECK | Warning indicators * | 3-28 |
| - CHECK | Condition of the rear-view mirrors * | 3-28 |
| - CHECK | Cabin structure * | 3-28 |
| - CHECK | Frame structure * | 3-28 |
| - CHECK | Attachment carriage * | 3-28 |
| - CHECK | Condition of attachments * | 3-28 |


***** Engine service, consult your dealer.***

**** Consult your dealer.***

https://truckmanualshub.com/

# PERIODIC SERVICE

## MAINTENANCE SCHEDULE

| | OR | | | | | |
|---|---|---|---|---|---|---|
| WHEN DUE | FIRST 6 MONTHS | FIRST 500 HOURS | 500 H or 1 YEAR | 1000 H or 2 YEARS | 1500 H or 3 YEARS | 2000 H or 4 YEARS |
| PERIODIC SERVICE | MANDATORY SERVICE | MANDATORY SERVICE + ❶ | ❶ | ❶+❷ | ❶ | ❶+❷+❸ |
| MACHINE COUNTER | | | | | | |
| DATE OF SERVICING | | | | | | |

| WHEN DUE | 2500 H or 5 YEARS | 3000 H or 6 YEARS | 3500 H or 7 YEARS | 4000 H or 8 YEARS | 4500 H or 9 YEARS | 5000 H or 10 YEARS | 5500 H or 11 YEARS |
|---|---|---|---|---|---|---|---|
| PERIODIC SERVICE | ❶ | ❶+❷+❹ | ❶ | ❶+❷+❸ | ❶ | ❶+❷ | ❶ |
| MACHINE COUNTER | | | | | | | |
| DATE OF SERVICING | | | | | | | |

| WHEN DUE | 6000 H or 12 YEARS | 6500 H or 13 YEARS | 7000 H or 14 YEARS | 7500 H or 15 YEARS | 8000 H or 16 YEARS | 8500 H or 17 YEARS | 9000 H or 18 YEARS |
|---|---|---|---|---|---|---|---|
| PERIODIC SERVICE | ❶+❷+❸+❹ | ❶ | ❶+❷ | ❶ | ❶+❷+❸ | ❶ | ❶+❷+❹ |
| MACHINE COUNTER | | | | | | | |
| DATE OF SERVICING | | | | | | | |

## ➲ ❶ 500H - PERIODIC SERVICE - EVERY 500 HOURS OF SERVICE OR 1 YEAR


- CHECK Hydraulic oil ..... 3-20
- REPLACE Engine oil ..... 3-20
  - REPLACE Engine oil filter ..... 3-20
- REPLACE Fuel filter ..... 3-21
- REPLACE Fuel pre-filter ..... 3-21
- REPLACE Transfer box oil ..... 3-21
- REPLACE Front axle differential oil ..... 3-22
- REPLACE Hydraulic return oil filter cartridge ..... 3-22
- REPLACE Hydraulic fluid tank filter cap ..... 3-23
- REPLACE Cab fan filter ..... 3-23
- CHECK Hoses and differential pressure hoses for the exhaust particle filter "DPF" ** ..... 3-23
- CHECK Exhaust gas recirculation piping "EGR" ** ..... 3-23
- CHECK Intake hose ** ..... 3-23
- CHECK **Exhaust manifold ..... 3-23
- CHECK Fork wear * ..... 3-23


*** Engine service, consult your dealer.*

** Consult your dealer.*

https://truckmanualshub.com/

## ➲ ❷ 1000H - PERIODIC SERVICE - EVERY 1000 HOURS OF SERVICE OR 2 YEARS

**ALSO PERFORM THE 500 HOUR PERIODIC MAINTENANCE OPERATIONS.**


- CHECK — Safety belt ..... 3-24
- CLEAN — Fuel tank ..... 3-24
- REPLACE — Alternator belt ..... 3-25
- REPLACE — Engine crankcase ventilation filter ..... 3-25
- REPLACE — Dry air filter cartridge ..... 3-26
- REPLACE — Coolant ..... 3-26
- REPLACE — Rear axle differential oil ..... 3-27
- REPLACE — Front wheel reducer oil ..... 3-27
- REPLACE — Rear wheel reducer oil ..... 3-27
- CHECK — Silentblocks ** ..... 3-28
- CHECK — Valve lash ** ..... 3-28
- CHECK — Injectors ** ..... 3-28
- CHECK — Exhaust gas recirculation cooler "EGR" ** ..... 3-28
- CHECK — Casing gas recycling valve ** ..... 3-28
- CHECK — Brake system pressure * ..... 3-28
- CHECK — Boom pad wear * ..... 3-28
- CHECK — Condition of wiring harnesses and cables * ..... 3-28
- CHECK — Lights and signals * ..... 3-28
- CHECK — Warning indicators * ..... 3-28
- CHECK — Condition of the rear-view mirrors * ..... 3-28
- CHECK — Cabin structure * ..... 3-28
- CHECK — Frame structure * ..... 3-28
- CHECK — Attachment carriage * ..... 3-28
- CHECK — Condition of attachments * ..... 3-28
- REPLACE — Oil separator rubber hoses ** ..... 3-29
- REPLACE — Exhaust particle filter pressure sensor rubber hoses "DPF" ** ..... 3-29
- REPLACE — Intake hose ** ..... 3-29
- REPLACE — Pressure detection hoses for the oversupply sensor ** ..... 3-29
- REPLACE — Exhaust gas recirculation cooler hoses "EGR" ** ..... 3-29
- REPLACE — Water hose ** ..... 3-29
- REPLACE — Lubrication hose ** ..... 3-29
- REPLACE — Radiator hoses and clamping collars ** ..... 3-29
- REPLACE — Fuel hoses and clamping collars ** ..... 3-29
- REPLACE — Brake fluid * ..... 3-29
- BLEED — Brake circuit * ..... 3-29
- ADJUST — Brake * ..... 3-29


***** Engine service, consult your dealer.***

**** Consult your dealer.***

## ➲ ❸ 2000H - PERIODIC SERVICE - EVERY 2000 HOURS OF SERVICE OR 4 YEARS

**ALSO PERFORM THE 500 HOUR AND 1000 HOUR PERIODIC MAINTENANCE OPERATIONS.**


- CHECK — Wheel nut tightening torques ..... 3-30
- REPLACE — Dry air filter safety cartridge ..... 3-30
- REPLACE — Hydraulic oil ..... 3-31
  - REPLACE — Brake accumulator unit filter ..... 3-31
- CHECK — Radiator * ..... 3-32
- CHECK — Transmission pressures * ..... 3-32
- CHECK — Steering * ..... 3-32
- CHECK — Steering swivel joints * ..... 3-32
- CHECK — Brake pad and brake disk wear * ..... 3-32
- CHECK — Condition of boom assembly * ..... 3-32
- CHECK — Bearings and bushings * ..... 3-32
- CHECK — Condition of hoses and flexible pipes * ..... 3-32
- CHECK — Condition of cylinders (leakage, rods) * ..... 3-32
- CHECK — Hydraulic circuit pressures * ..... 3-32
- CLEAN — Air conditioning (OPTION) * ..... 3-32
- REPLACE — Compressor belt (Air Conditioning OPTION) * ..... 3-32


**** Consult your dealer.***

https://truckmanualshub.com/

## ➲ ❹ 3000H - PERIODIC SERVICE - EVERY 3000 HOURS OF SERVICE OR 6 YEARS

**ALSO PERFORM THE 500 HOUR AND 1000 HOUR PERIODIC MAINTENANCE OPERATIONS.**


- CHECK — Turbocharger ** ..... 3-33
- CHECK — Exhaust gas recirculation system "EGR" ** ..... 3-33
- CLEAN — Exhaust particle filter "DPF" ** ..... 3-33


***** Engine service, consult your dealer.**

# OCCASIONAL MAINTENANCE AND OPERATION

## ➲ OCCASIONAL MAINTENANCE


- CLEAN — "Stationary lift truck" exhaust purification ..... 3-34
- REPLACE — Wheels ..... 3-35
- REPLACE — Battery failure ..... 3-36
- ADJUST — Front headlights ..... 3-36


## ➲ OCCASIONAL OPERATION


- TOW OR WINCH — Lift truck ..... 3-38
- SLING — Lift truck ..... 3-38
- TRANSPORT — Lift truck ..... 3-39

https://truckmanualshub.com/

# FILTER ELEMENTS AND BELTS

## ❶ 500H - PERIODIC SERVICE - EVERY 500 HOURS OF SERVICE OR 1 YEAR

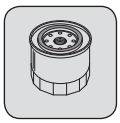

ENGINE OIL FILTER
Part number: 279809

FUEL PRE-FILTER
Part number: 940729

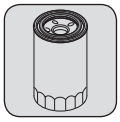

FUEL FILTER
Part number: 52630568

HYDRAULIC RETURN OIL FILTER CARTRIDGE
Part number: 750098

INTERIOR CAB VENTILATION FILTER
Part number: 750306

HYDRAULIC FLUID TANK FILTER CAP
Part number: 794879

## ❷ 1000H - PERIODIC SERVICE - EVERY 1000 HOURS OF SERVICE OR 2 YEARS

**ALSO ADD FILTER ELEMENTS FOR PERIODIC MAINTENANCE AFTER 500 HOURS OF SERVICE.**

ALTERNATOR BELT
Part number: 749473

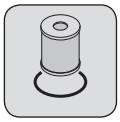

ENGINE CRANKCASE VENTILATION FILTER
Part number: 940867

DRY AIR FILTER CARTRIDGE
Part number: 563416

## ❸ 2000H - PERIODIC SERVICE - EVERY 2000 HOURS OF SERVICE OR 4 YEARS

**ALSO ADD FILTER ELEMENTS FOR PERIODIC MAINTENANCE AT 500 HOURS AND 1000 HOURS OF SERVICE.**

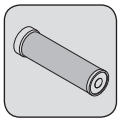

SAFETY DRY AIR FILTER CARTRIDGE
Part number: 563415

BRAKE ACCUMULATOR UNIT FILTER
Part number: 746308

## OCCASIONAL MAINTENANCE

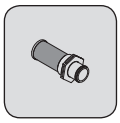

SUCTION STRAINER FOR HYDRAULIC OIL TANK
Part number: 749589

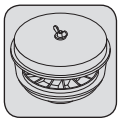

CYCLONIC PRE-FILTER (OPTION)
Part number: 224713

COMPRESSOR BELT
(AIR CONDITIONING OPTION)
Part number: 281458

https://truckmanualshub.com/

# LUBRICANTS AND FUEL

**⚠ IMPORTANT ⚠**

*USE THE RECOMMENDED LUBRICANTS AND FUEL:*
*- For topping up, oils may not be miscible.*
*- For oil changes, MANITOU oils are perfectly appropriate.*

**DIAGNOSTIC ANALYSIS OF OILS**

If a service or maintenance contract has been set up with the dealer, a diagnostic analysis of engine, transmission and axle oils may be requested depending on the rate of use.

**(*) REQUIRED FUEL SPECIFICATION**

Use a high-quality fuel to obtain optimal performance of the engine.

- EN590 diesel fuel (sulphur content < 10 ppm)
- ASTM D975 diesel fuel (sulphur content < 15 ppm)

## RECOMMENDATION

### ENGINE

| DESCRIPTION | CAPACITY | RECOMMENDATION |
|---|---|---|
| ENGINE | 3 US gal (11,2 ℓ) | 0W30<br>0W40<br>5W30<br>5W40<br>10W30<br>MANITOU EVOLOGY OIL 10W40 API CJ4<br>15W40<br>20W50 |
| COOLING CIRCUIT | 12.7 US qt (12 ℓ) | COOLANT -35°C |
| FUEL TANK | 16.6 US gal (63 ℓ) | GNR HP DIESEL FUEL * |

### BOOM

| DESCRIPTION | RECOMMENDATION |
|---|---|
| BOOM PAD SLIDE PATHWAYS | MANITOU BLACK MULTI-PURPOSE LUBRICANT |
| GREASING OF THE BOOM | MANITOU BLUE MULTI-PURPOSE LUBRICANT |

### HYDRAULICS

| DESCRIPTION | CAPACITY | RECOMMENDATION |
|---|---|---|
| HYDRAULIC OIL TANK | 22.5 US gal (85 ℓ) | ISO VG 100<br>ISO VG 68<br>MANITOU ISO VG 46 HYDRAULIC OIL<br>ISO VG 37<br>ISO VG 32 |

### BRAKES

| DESCRIPTION | CAPACITY | RECOMMENDATION |
|---|---|---|
| BRAKE SYSTEM | 1.06 US qt (1 ℓ) | MANITOU MINERAL BRAKE FLUID |

### CAB

| DESCRIPTION | CAPACITY | RECOMMENDATION |
|---|---|---|
| WINDSCREEN WASHER TANK | 2.11 US qt (2 ℓ) | WINDSCREEN WASHER LIQUID |



647732 (31/10/2019)
MT 625 H 75K ST5 S1 / MT 625 H 75K COMFORT ST5 S1

https://truckmanualshub.com/

## FRONT AXLE

| DESCRIPTION | CAPACITY | RECOMMENDATION |
|---|---|---|
| FRONT AXLE DIFFERENTIAL | 4.23 US qt (4 ℓ) | SPECIAL MANITOU OIL FOR IMMERSED BRAKES |
| TRANSFER GEAR BOX<br>FRONT WHEEL REDUCING GEAR | 0.79 US qt (0,75 ℓ)<br>2 x 0.85 US qt (0,8 ℓ) | MANITOU SAE80W90 MECHANICAL TRANSMISSION OIL |
| FRONT WHEEL REDUCING GEAR PIVOTS | | MANITOU BLACK MULTI-PURPOSE LUBRICANT |

| -40°F | -22°F | -4°F | 14°F | 32°F | 50°F | 68°F | 86°F | 104°F | 122°F |
|---|---|---|---|---|---|---|---|---|---|
| -40°C | -30°C | -20°C | -10°C | 0°C | 10°C | 20°C | 30°C | 40°C | 50°C |

## REAR AXLE

| DESCRIPTION | CAPACITY | RECOMMENDATION |
|---|---|---|
| REAR AXLE DIFFERENTIAL | 4.02 US qt (3,8 ℓ) | SPECIAL MANITOU OIL FOR IMMERSED BRAKES |
| REAR WHEEL REDUCING GEAR | 2 x 0.95 US qt (0,9 ℓ) | MANITOU SAE80W90 MECHANICAL TRANSMISSION OIL |
| REAR AXLE OSCILLATION | | MANITOU BLUE MULTI-PURPOSE LUBRICANT |
| REAR WHEEL REDUCING GEAR PIVOTS | | MANITOU BLACK MULTI-PURPOSE LUBRICANT |

| -40°F | -22°F | -4°F | 14°F | 32°F | 50°F | 68°F | 86°F | 104°F | 122°F |
|---|---|---|---|---|---|---|---|---|---|
| -40°C | -30°C | -20°C | -10°C | 0°C | 10°C | 20°C | 30°C | 40°C | 50°C |

## *PACKAGING*

### OIL

| PRODUCT | PACKAGING / PART NO. | | | | | |
|---|---|---|---|---|---|---|
| | 1.06 US qt<br>1 ℓ | 2.11 US qt<br>2 ℓ | 5.28 US qt<br>5 ℓ | 5.28 US gal<br>20 ℓ | 14.53 US gal<br>55 ℓ | 55.21 US gal<br>209 ℓ |
| - MANITOU EVOLOGY OIL 10W40 API CJ4 | | | 895837 | 895838 | 895839 | 895840 |
| - MANITOU ISO VG 46 HYDRAULIC OIL | | | 545500 | 582297 | 546108 | 546109 |
| - MANITOU MINERAL BRAKE FLUID | 490408 | | | | | 4500078 |
| - SPECIAL MANITOU OIL FOR IMMERSED BRAKES | | | 545976 | 582391 | 947918 | 894257 |
| - MANITOU SAE80W90 MECHANICAL TRANSMISSION OIL | | 499237 | 720184 | 546330 | 546221 | 546220 |

### GREASE

| PRODUCT | PACKAGING / PART NO. | | | | | |
|---|---|---|---|---|---|---|
| | 0.42 US qt<br>400 mℓ | 0.88 lbs<br>400 g | 2.20 lbs<br>1 kg | 11.02 lbs<br>5 kg | 44.09 lbs<br>20 kg | 551.16 lbs<br>50 kg |
| - MANITOU BLACK MULTI-PURPOSE LUBRICANT | | 947766 | 161590 | | | 499235 |
| - MANITOU BLUE MULTI-PURPOSE LUBRICANT | | 161589 | | 554974 | 499233 | 489670 |

### LIQUID

| PRODUCT | PACKAGING / PART NO. | | | | | |
|---|---|---|---|---|---|---|
| | 1.06 US qt<br>1 ℓ | 2.11 US qt<br>2 ℓ | 5.28 US qt<br>5 ℓ | 5.28 US gal<br>20 ℓ | 14.53 US gal<br>55 ℓ | 55.48 US gal<br>210 ℓ |
| - COOLANT -35°C | | | 894967 | 894968 | | 894969 |
| - WINDSCREEN WASHER LIQUID | 490402 | | 486424 | | | |

https://truckmanualshub.com/

# 10H - DAILY SERVICE OR EVERY 10 HOURS OF SERVICE

## CHECK — Lift truck environment

Carry out a general inspection around the lift truck:

- Fluid leaks or stains on the ground.
- Additional objects on the lift truck and in the cabin.
- Mounting and locking of the attachment.
- Mounting and adjustment of rear-view mirrors.
- Condition of the tyres, to detect cuts, blisters, wear, etc.

**IMPORTANT**

*Follow the operator instructions (◁ 1 - OPERATING AND SAFETY INSTRUCTIONS: OPERATOR INSTRUCTIONS).*

**CLEANLINESS OF THE FORKLIFT**

- Cleanliness of lights and rear-view mirror.
- Excess dirt or build-up of material (e.g. straw, flour, sawdust, organic waste, etc.).
- On a daily basis, according to the conditions of use and the environment, the operator should ensure that the forklift truck is kept in a clean condition.
- Particular attention should be paid to accumulations of flammable materials (e.g. straw, flour, sawdust, organic waste, etc.) and fuel or lubricant leaks, as these significantly increase the risk of fire outbreaks.
- A regular inspection of the whole lift truck, especially the engine housing and the central part of the frame, is necessary to see how frequently it needs to be cleaned to prevent these potential accumulations of material or leakages.

## CHECK — Engine oil level

Place the lift truck on level ground with the engine stopped, and let the oil settle in the sump.

- Open the engine cover.
- Pull out dipstick 1.
- Clean the dipstick and check the correct level between the two notches.
- If necessary, add oil (◁ LUBRICANTS AND FUEL) through the filler hole 2.
- Visually check that there is no leakage or seepage.

## CHECK — Cooling liquid level

Place the lift truck on level ground with the engine stopped, and allow the engine to cool.

**IMPORTANT**

*To avoid any risk of spraying or scalding, wait until the engine has cooled down before removing the cooling system filler plug.*

*In the event of an emergency, it is possible to use water as the coolant, but then proceed to drain the coolant circuit as quickly as possible.*

- Open the engine cover.
- The liquid must be at mid-height in the expansion tank 1.
- If necessary, add coolant (◁ LUBRICANTS AND FUEL) through the filler hole 2.
- Visually check that there is no leakage or seepage.

https://truckmanualshub.com/

## CLEAN — Cyclonic pre-filter (option)

The cleaning interval is given as a guide, however the pre-filter must be emptied and cleaned as soon as impurities reach the MAX level on the tank.

**⚠ IMPORTANT ⚠**

*When cleaning, take care not to let impurities into the dry air filter.*

- Loosen nut 1 remove cover 2 and empty the tank.
- Clean the pre-filter unit with a clean dry cloth and reassemble the unit.

https://truckmanualshub.com/

# 50H - WEEKLY SERVICE OR EVERY 50 HOURS OF SERVICE

## CHECK — Alternator/crankshaft belt tension

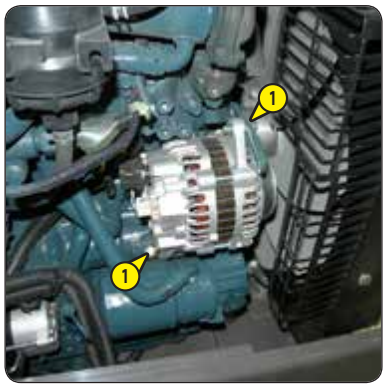


**IMPORTANT**

*If the belt is changed, check the tension again after the first 20 hours of service.*

- Open the engine cover.
- Check the belt for signs of wear and cracks, and change if necessary (◁ FILTER ELEMENTS AND BELTS).
- Check the belt tension between the fan pulley and the alternator pulley (22,03 lbs / 98 N). The clearance should be about 0,3 to 0,4 in (7 to 9 mm).
- Adjust if necessary.
- Loosen screws 1 by two to three thread turns.
- Swivel the alternator assembly so as to obtain the required belt tension.
- Retighten screws 1 (tightening torque 16 ft-lbs ±1,6 ft-lbs 22 N.m ±2,2 N.m).

## CHECK — Compressor belt tension (Air conditioning option)

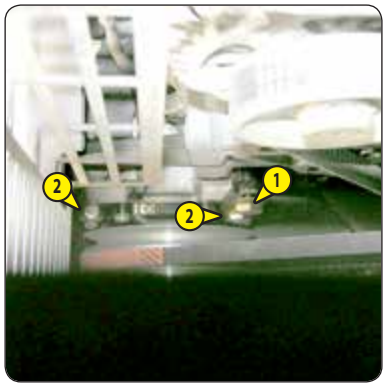


**IMPORTANT**

*If the belt is changed, check the tension again after the first 20 hours of service.*

- Open the engine cover.
- Check the belt for signs of wear and cracks, and change if necessary (◁ FILTER ELEMENTS AND BELTS).
- Check the belt tension between the pulleys of the crankshaft and the compressor
- Under a normal pressure exerted with the thumb (10 lbs / 45 N), the clearance should be approximately 0,39 in (10 mm).
- Adjust if necessary.
- Loosen the screws 1 and nuts 2 by two to three thread turns.
- Swivel the compressor assembly so as to obtain the belt tension required.
- Re-tighten screws 1 and nuts 2 (tightening torque 16 ft-lbs ±1,6 ft-lbs 22 N.m ±2,2 N.m).

## CHECK — Transfer box oil level

Place the lift truck on level ground with the engine stopped.

- Visually check for any traces of seepage or leakage from the various filler, level and drain plugs.
- If there is any leakage or seepage, check the level.
- Remove the level plug 1, the oil should be flush with the edge of the hole.
- If necessary, add oil (◁ LUBRICANTS AND FUEL) by the same hole.
- Refit and tighten the level plug 1 (tightening torque 25 - 36 ft-lbs 34 - 49 N.m).

## CHECK — Tyre pressures

## CHECK — Wheel nut tightening

**IMPORTANT**

*Check that the air hose is correctly connected to the tyre valve before inflating and keep all persons at a distance during inflation. Follow the recommended tyre pressures.*

- Check the condition of the tyres, to detect cuts, blisters, wear, etc.
- Check the wheel nut tightening. Non-compliance with this instruction can lead to deterioration and breakage of the wheel bolts and distortion of the wheels.
- Check and restore tyre pressures if necessary (◁ 2 - DESCRIPTION: TYRES).

NOTE: There is an OPTIONAL wheel tool kit.

https://truckmanualshub.com/

## CHECK — Front axle differential seal
## CHECK — Rear axle differential seal

Place the lift truck on level ground with the engine stopped.

- Visually check for any traces of seepage or leakage from the various filler, level and drain plugs.
- If there is any leakage or seepage, check the level.
- Remove the level plug 1, the oil should be flush with the edge of the hole.
- If necessary, add oil (◁ LUBRICANTS AND FUEL) through the filler hole 2.
- Refit and tighten the level plug 1 (tightening torque 25 - 36 ft-lbs 34 - 49 N.m).

## CHECK — Front wheel reducer seals
## CHECK — Rear wheel reducer seals

Place the lift truck on level ground with the engine stopped.

- Visually check for any traces of seepage or leakage from the level plug.
- If there is any leakage or seepage, check the level.
- Place level plug 1 in a horizontal position.
- Remove the level plug; the oil should be flush with the edge of the opening.
- If necessary, add oil (◁ LUBRICANTS AND FUEL) by the same hole.
- Refit and tighten the level plug (tightening torque 25 - 36 ft-lbs 34 - 49 N.m).

## CHECK — Brake fluid level

Place the lift truck on level ground.

**⚠ IMPORTANT ⚠**

*If the brake oil level is abnormal consult your dealer.*

- Open the protective casing 1 with the ignition key.
- Check tank 2. The correct level should be at the MAX. level on the tank.
- If necessary, add oil (◁ LUBRICANTS AND FUEL).
- Remove cap 3.
- Add oil through filler port.
- Refit the cap.
- Visually check that there is no leakage in the tank and pipes.

## CHECK — Boom pad slide pathways

To preserve optimum operation, the pad slide pathways should be correctly lubricated:

**⚠ IMPORTANT ⚠**

*MANDATORY GREASING OF THE BOOM AFTER:*
*Cleaning the boom, especially after using high pressure cleaner.*
*The forklift has been unused for a long period of time.*

- Fully extend the boom.
- Check the condition of the surface of the pad slide pathways, surface run in (steel whitened) without traces of corrosion.
- If necessary lubricate the pad slide pathways (◁ LUBRICANTS AND FUEL).
- Telescope the boom several times in order to spread the lubricant evenly.
- Remove the surplus lubricant.

**⚠ IMPORTANT ⚠**

*If the lift truck is used in an abrasive environment (dust, sand, coal.) use lubricating varnish (MANITOU reference: 483536). Please consult your dealer.*

https://truckmanualshub.com/

## CHECK — Hydraulic oil level

Place the lift truck on level ground with the engine stopped, and the boom retracted and lowered as far as possible.

**IMPORTANT**

*Use a clean funnel and clean the underside of the oil drum before filling.*

- Check dipstick 1, the correct level must be at the level of the red dot.
- If necessary, add oil (◁ LUBRICANTS AND FUEL).
- Remove cap 2.
- Add oil through filler port 3.
- Refit the cap.
- Visually check that there is no leakage in the tank and pipes.

## CHECK — Windscreen washer liquid level

- Open the protective casing 1 with the ignition key.
- Visually check the level in tank 2.
- If necessary add windscreen washer fluid (◁ LUBRICANTS AND FUEL).
- Remove cap 3.
- Add windscreen washer liquid through filler port.
- Refit the cap.

## CLEAN — Fuel pre-filter

**IMPORTANT**

*Carefully clean the outside of the pre-filter and its holder, to prevent dust from getting into the system.*

- Open the engine cover.
- Disconnect electrical wiring harness 1 from the fuel pre-filter.
- Place a receptacle under the drain plug 2 and unscrew it by two thread turns.
- Allow the diesel fuel to flow out until it is free from impurities and water.
- Re-tighten drain plug 2 and reconnect the wiring harness 1.

https://truckmanualshub.com/

## CLEAN — Radiator cores

**IMPORTANT**

*In a polluting atmosphere, clean the radiator cores every day. Do not use a water jet or high-pressure steam as this could damage the radiator fins.*

- Open the engine cover.
- If necessary, clean the intake grille on the engine bonnet.
- Using a soft cloth, clean the radiator cores in order to remove as much dirt as possible.
- Clean the radiator using a compressed air jet aimed from the engine towards the radiator, in the opposite direction to the cooling air flow.

## CLEAN — Dry air filter cartridge

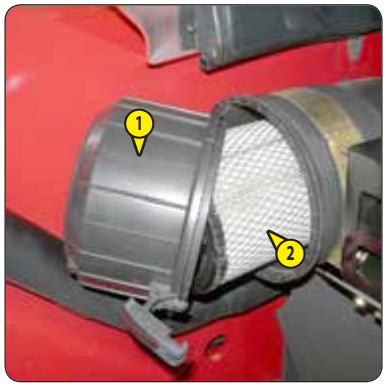


When used in very dusty atmospheres there are pre-filtration elements (◁ FILTER ELEMENTS AND BELTS). The cartridge checking and cleaning interval must also be reduced.

**IMPORTANT**

*If the clogging indicator lamp comes on, this operation must be carried out as soon as possible (within a maximum of 1 hour). Never use the lift truck without an air filter or with an air filter that is damaged.*
*Respect the safety distance of 30 mm between the air jet and the cartridge to avoid tearing or piercing the cartridge.*
*The cartridge must not be blown near the air filter box. Never clean the cartridge by tapping it against a hard surface.*
*Your eyes must be protected during this intervention.*
*Never clean the dry air filter cartridge by washing it in liquid. Do not clean by any means the safety cartridge located inside the filter cartridge, change it for a new one if it is clogged or damaged.*

- For the dismantling and refitting of the cartridge (◁ 1000H: REPLACE Air filter cartridge).
- Clean the filter cartridge using a compressed air jet (max. pressure 3 bars) directed from the top to the bottom and from the inside towards the outside at a minimum distance of 30 mm from the cartridge wall.
- Cleaning is completed when there is no more dust on the cartridge.
- Clean the cartridge seal surface with a damp, clean lint-free cloth and grease with a silicone lubricant (MANITOU part No.: 479292).
- Check visually the outer condition of the air filter and its mounts. Verify the condition of the hoses and their mounts also.

## CLEAN — Condenser wiring harness (Air conditioning OPTION)

**IMPORTANT**

*In a polluting atmosphere, clean the radiator core every day. Do not use a water jet or high-pressure steam as this could damage the condenser fins.*

- Remove the protective grid 1 and clean it if necessary.
- Visually check whether the condenser is clean and clean it if necessary.
- Clean the condenser using a compressed air jet aimed in the same direction as the air flow.
- Clean with the fans running for best results.

https://truckmanualshub.com/



To be carried out weekly, if the lift truck has been operated for less than 50 hours during the week.

**IMPORTANT**

*In the event of prolonged use in an extremely dusty or oxidising atmosphere, reduce this interval to 10 hours of service or every day.*

Clean, then lubricate the following points with grease (LUBRICANTS AND FUEL) and remove the surplus.

**BOOM**

1 - Lubricators of the boom pin (2 lubricators).
2 - Lubricator of the carriage pin (1 lubricator).
3 - Lubricator of the tilting cylinder foot pin (1 lubricator).
4 - Lubricator of the tilting cylinder head pin (1 lubricator).
5 - Lubricator of the lifting cylinder foot pin (1 lubricator).
6 - Lubricator of the lifting cylinder head pin (1 lubricator).
7 - Lubricator of the compensating cylinder foot pin (1 lubricator).
8 - Lubricator of the compensating cylinder head pin (1 lubricator).

**FRONT AND REAR WHEEL REDUCTION GEAR PIVOTS**

9 - Lubricators of the wheel reduction gear pivot pins (8 lubricators).

**REAR AXLE OSCILLATION**

10 - Rear axle oscillation lubricators (2 lubricators).

https://truckmanualshub.com/

## REPLACE — Engine oil *

## REPLACE — Engine oil filter *

Place the lift truck on level ground, let the engine run at idling speed for a few minutes, then stop the engine.

**IMPORTANT**

*Dispose of the drain oil in an ecological manner.*

*Tighten the oil filter by hand pressure only and lock the filter in place by a quarter turn.*

### DRAINING THE OIL

- Open the engine cover.
- Remove access panel 1.

NOTE: When removing cover plates and hatches, clean the surrounding area and remove any accumulations of flammable materials.

- Place a container under the drain hole and unscrew the drain plug 2.
- Remove the filler plug 3 to ensure correct drainage.

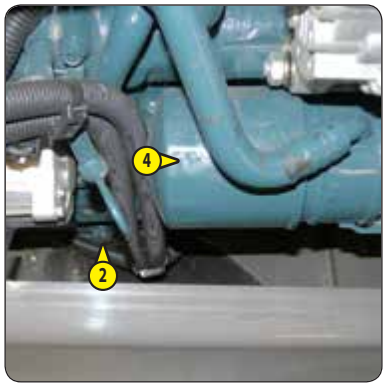


### REPLACEMENT OF THE FILTER

- Unscrew and discard the engine oil filter 4, together with its seal.
- Clean the filter bracket with a clean, lint-free cloth.
- Lightly oil the seal before refitting the new oil filter (◁ FILTER ELEMENTS AND BELTS) on its bracket (tightening torque 11 - 12,5 ft-lbs 15 - 17 N.m).

### FILLING WITH OIL

- Refit and tighten the drain plug 1.
- Fill up with oil (◁ LUBRICANTS AND FUEL) through filler hole 5.
- Wait a few minutes to allow the oil to flow into the sump.
- Start the engine and let it run for a few minutes.
- Check for possible leaks from the drain plug and the oil filter.
- Stop the engine, wait a few minutes and check the correct level between the two marks on the dipstick 6.
- Top up the level if necessary.
- Refit the access cover 1.

** Only for the first 50 hours of service and then every 500 hours of service or 1 year.*

https://truckmanualshub.com/

# ➲ ❶ 500H - PERIODIC SERVICE - EVERY 500 HOURS OF SERVICE OR 1 YEAR

## CHECK — Hydraulic oil

MANITOU offers a hydraulic oil analysis kit which might make it possible to delay the recommended deadline in the periodic maintenance schedule (2000 hours). In this case we recommend an analysis of the hydraulic oil every 500 hours or 1 year of service.

The oil analysis kit also makes it possible to confirm the oil quality so as to obtain a deadline of 2000 hours for specific uses causing constraints on the hydraulic circuit: extreme environmental conditions, use of the attachments with a very high hydraulic flow rate (such as a sweeper, or a concrete mixer).

- Order an oil analysis kit from your dealer.
- Upon receiving the kit, take a sample of oil and follow the instructions shown on the kit.
- According to the results, keep the analysis report or replace the hydraulic oil.

**MANITOU oil analysis kit Part No. 958162.**

## REPLACE — Engine oil

### REPLACE — Engine oil filter

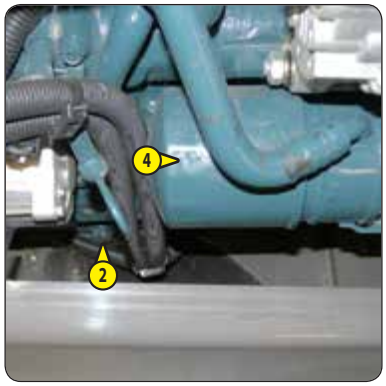

Place the lift truck on level ground, let the engine run at idling speed for a few minutes, then stop the engine.

**⚠ IMPORTANT ⚠**

*Dispose of the drain oil in an ecological manner.*

*Tighten the oil filter by hand pressure only and lock the filter in place by a quarter turn.*

**DRAINING THE OIL**

- Open the engine cover.
- Remove access panel 1.

NOTE: When removing cover plates and hatches, clean the surrounding area and remove any accumulations of flammable materials.

- Place a container under the drain hole and unscrew the drain plug 2.
- Remove the filler plug 3 to ensure correct drainage.

**REPLACEMENT OF THE FILTER**

- Unscrew and discard the engine oil filter 4, together with its seal.
- Clean the filter bracket with a clean, lint-free cloth.
- Lightly oil the seal before refitting the new oil filter (◁ FILTER ELEMENTS AND BELTS) on its bracket (tightening torque 11 - 12,5 ft-lbs 15 - 17 N.m).

**FILLING WITH OIL**

- Refit and tighten the drain plug 2.
- Fill up with oil (◁ LUBRICANTS AND FUEL) through filler hole 5.
- Wait a few minutes to allow the oil to flow into the sump.
- Start the engine and let it run for a few minutes.
- Check for possible leaks from the drain plug and the oil filter.
- Stop the engine, wait a few minutes and check the correct level between the two marks on the dipstick 6.
- Top up the level if necessary.
- Refit the access cover 1.

https://truckmanualshub.com/

## REPLACE — Fuel filter

**IMPORTANT**

*Carefully clean the outside of the filter and around it, to prevent dust from getting into the system.*
*Tighten the filter by hand only and lock it by a quarter turn.*

- Switch off the lift truck's ignition with the ignition key.
- Unscrew the filter 1.
- Clean the inside of the filter head using a brush immersed in clean diesel oil.
- Refit a new filter lubricated with clean diesel beforehand (◁ FILTER ELEMENTS AND BELTS).

## REPLACE — Fuel pre-filter

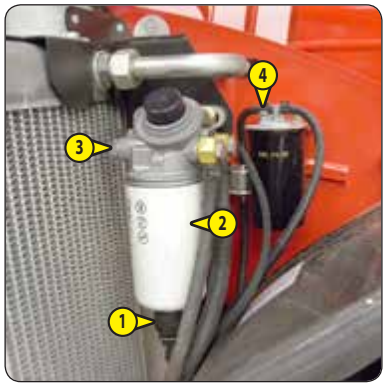


**IMPORTANT**

*Carefully clean the outside of the filter and around it, to prevent dust from getting into the system.*
*Tighten the filter by hand only and lock it by a quarter turn.*

- Disconnect the wiring harness 1.
- Place a receptacle under the filter 2.
- Unscrew the filter 2.
- Clean the inside of the filter head using a brush immersed in clean diesel oil.
- Refit a new filter lubricated with clean diesel beforehand (◁ FILTER ELEMENTS AND BELTS).
- Reconnect the wiring harness 1.
- Open bleed screws 3 and 4.
- Turn on the lift truck's ignition with the ignition key.
- Close the bleed screws 3 and 4 as soon as the diesel flows free of air.

## REPLACE — Transfer box oil

Place the lift truck on level ground with the engine stopped and the transfer box oil still warm.

**IMPORTANT**

*Dispose of the drain oil in an ecological manner.*

- Remove access panel 1.
- Place a container under drain plug 2 and unscrew the plug.
- Remove level and filling plug 3 to ensure correct drainage.
- Refit and tighten the drain plug 2 (tightening torque 25 - 36 ft-lbs 34 - 49 N.m).
- Fill up with oil (◁ LUBRICANTS AND FUEL) through filler hole 3.
- The level is correct when the oil level is flush with the edge of the hole.
- Check for any possible leaks at the drain plug.
- Refit and tighten the level and filling plug 3 (tightening torque 25 - 36 ft-lbs 34 - 49 N.m).
- Refit the access cover 1.

https://truckmanualshub.com/

## REPLACE — Front axle differential oil

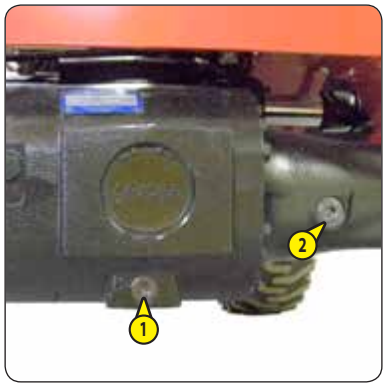


Place the lift truck on level ground with the engine stopped and the still warm differential oil.

**⚠ IMPORTANT ⚠**

*Dispose of the drain oil in an ecological manner.*

- Place a container under drain plug 1 and unscrew the plug.
- Remove level and filling plug 2 to ensure correct drainage.
- Refit and tighten the drain plug 1 (tightening torque 25 - 36 ft-lbs 34 - 49 N.m).
- Fill up with oil (◁ LUBRICANTS AND FUEL) through filler hole 2.
- The level is correct when the oil level is flush with the edge of the hole.
- Check for any possible leaks at the drain plug.
- Refit and tighten the level and filling plug 2 (tightening torque 25 - 36 ft-lbs 34 - 49 N.m).

## REPLACE — Hydraulic return oil filter cartridge

Stop the engine and release the pressure from the systems by operating the hydraulic controls.

**⚠ IMPORTANT ⚠**

*Raise the boom and place the boom safety wedge on the rod of the lifting cylinder (◁ 1 - INSTRUCTIONS AND SAFETY RECOMMENDATIONS: LIFT TRUCK MAINTENANCE INSTRUCTIONS).*

*Thoroughly clean the outside of the filter and its surroundings before any operation to prevent any risk of polluting the hydraulic system.*

- Remove cap 1.
- Place a container under hydraulic return oil filter.
- Unscrew the cover 2.
- Wait a few seconds for the oil to flow into the container.
- Slowly take out filter cartridge assembly 3 and 4.
- Separate the head 3 from the filter cartridge 4 with a twisting motion.
- Refit the head onto a new cartridge (◁ FILTER ELEMENTS AND BELTS).
- Fit the assembly in place and re-tighten cover 2.
- Put the cap 1 back.

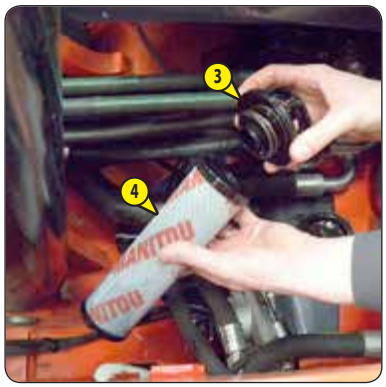


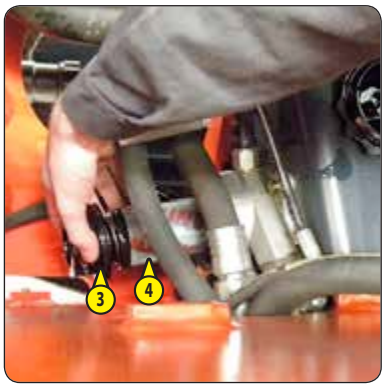

https://truckmanualshub.com/

## REPLACE — Hydraulic fluid tank filter cap

Place the lift truck on level ground with the engine stopped.

- Unscrew plug 1, remove and replace the filter 2 with a new one (◁ FILTER ELEMENTS AND BELTS).
- Refit and tighten the filter 2 (tightening torque 2,21 ±0,37 ft-lbs 3 ±0,5 N.m).
- Refit the filler plug 1.

## REPLACE — Cab fan filter

**INTERNAL CAB VENTILATION FILTER**

- Remove the protective grid 1.
- Remove the cab ventilation filter and replace it with a new one (◁ FILTER ELEMENTS AND BELTS).
- Refit the protective grid.

## CHECK — Hoses and differential pressure hoses for the exhaust particle filter "DPF" **

## CHECK — Exhaust gas recirculation piping "EGR" **

## CHECK — Intake hose **

## CHECK — **Exhaust manifold

## CHECK — Fork wear *

** Engine service, consult your dealer.

* Consult your dealer.

https://truckmanualshub.com/

# ➲ ❷ 1000H - PERIODIC SERVICE - EVERY 1000 HOURS OF SERVICE OR 2 YEARS

*ALSO PERFORM THE 500 HOUR PERIODIC MAINTENANCE OPERATIONS.*

## CHECK — Safety belt

**⚠ IMPORTANT ⚠**

*Under no circumstances must the lift truck be used if the seat belt is defective (fixing, locking, cuts, tears, etc.).*
*Immediately repair or replace the safety belt.*

SEAT BELT WITH TWO ANCHORING POINTS

- Check the following points:
  - Fixing of the anchoring points on the seat.
  - Cleanness of the strap and the locking mechanism.
  - Triggering of the locking mechanism.
  - Condition of the strap (cuts, curled edges).

REELED SEAT BELT WITH TWO ANCHORING POINTS

- Check the points listed above together with the following points:
  - The correct winding of the belt.
  - Condition of the reel guards.
  - Roller locking mechanism when the strap is given a sharp tug.

NOTE: After an accident, replace the seat belt.

## CLEAN — Fuel tank

Place the lift truck on level ground with the engine stopped.

**⚠ IMPORTANT ⚠**

*While carrying out these operations, do not smoke or work near a flame.*
*Never try to carry out a weld or any other operation by yourself, this could provoke an explosion or a fire.*

- Inspect the parts of the fuel circuit and the tank liable to leak, both visually and by touch.
- In the event of a leak, contact your dealer.
- Place a container under drain plug 1 and unscrew the plug.
- Open the fuel filler access panel 2 with the ignition key.
- Remove the filler plug 3 to ensure correct drainage.
- Rinse with ten litres of clean diesel through filler hole 4.
- Refit and tighten the drain plug 1 (tightening torque 21 - 29 ft-lbs 29 - 39 N.m).
- Fill the fuel tank with clean diesel filtered through the filler port.
- Refit the filler plug.
- Close access panel 2.

https://truckmanualshub.com/

## REPLACE — Alternator belt

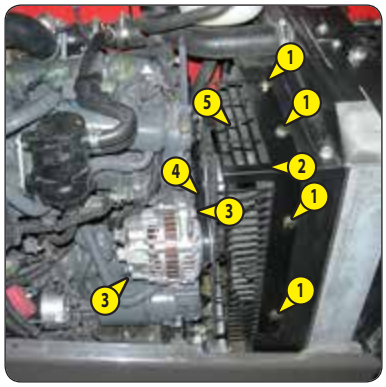


**IMPORTANT**

*Check the belt tension again after the first 20 hours of service.*

**REMOVING THE BELT**

- Undo screws 1 and remove radiator protection grill 2.
- Loosen screws 3 by two to three thread turns.
- Swivel the alternator assembly so as to free belt 4.
- Pass belt 4 behind radiator propeller 5 to remove it and replace with a new one (◁ FILTER ELEMENTS AND BELTS).

NOTE: Take advantage of belt removal to check the correct operation of the pulleys and bearings (noise, rubbing, play, etc.).

**REFITTING THE BELT**

- Refit a new alternator belt (◁ FILTER ELEMENTS AND BELTS). Ensure that it is properly seated in the grooves of each pulley.
- Adjust the belt tension between the crankshaft pulley and the alternator pulley (22,03 lbs / 98 N). The clearance should be about 0,3 to 0,4 in (7 to 9 mm).
- Swivel the alternator assembly so as to obtain the required belt tension.
- Retighten screws 1 (tightening torque 16 ft-lbs ±1,6 ft-lbs 22 N.m ±2,2 N.m).
- Refit the radiator protection grill 2.

## REPLACE — Engine crankcase ventilation filter

- Open the engine cover.
- Carefully clean the outside of the filter and its holder, to prevent dust from getting into the system.
- Disconnect the hose 1 at the filter.
- Unscrew the cover 2.
- Take out the filter 3 and discard it together with the seal of the cover 2.
- Refit a new seal on the cover and insert a new filter (◁ FILTER ELEMENTS AND BELTS).
- Put back the cover 2 and tighten by hand only and lock by a quarter turn.
- Reconnect hose 1.

https://truckmanualshub.com/

## REPLACE — Dry air filter cartridge

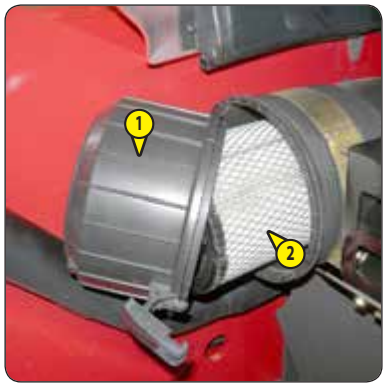


In case of use in a heavily dust laden atmosphere, there are pre-filtration cartridges, (◁ FILTER ELEMENTS AND BELTS). Also, the checking and cleaning periodicity of the cartridge must be reduced (up to 250 hours in a very dusty atmosphere and with pre-filtration).

**⚠ IMPORTANT ⚠**

*Change the cartridge in a clean location, with the engine stopped. Never operate the lift truck with the air filter removed or damaged.*

- Open the engine cover.
- Loosen the locks and remove cover 1.
- Gently remove the cartridge 2 to reduce dust falling as far as possible.
- Leave the safety cartridge in place.
- Carefully clean the following parts with a damp, clean lint-free cloth.
  - The inside of the filter and cover.
  - The inside of the filter inlet hose.
  - The gasket surfaces in the filter and in the cover.
- Check pipes and connections between the air filter and the engine and the connection and state of the clogging indicator on the filter.
- Before fitting check the condition of the new cartridge (◁ FILTER ELEMENTS AND BELTS).
- Insert the cartridge in the filter axis and push the cartridge pressing against the outer edge and not the centre.
- Reassemble the cover, guiding the valve downwards.

## REPLACE — Coolant

These operations are to be carried out as necessary or every 2 years at the beginning of winter. Place the lift truck on level ground with the engine stopped and cold.

**⚠ IMPORTANT ⚠**

*The engine does not contain any anti-corrosion elements and must be filled throughout the year with a mixture containing 25% ethylene glycol-based antifreeze.*

### DRAINING THE LIQUID

- Open the engine cover.
- Remove access panel 5.
- Place a container under the radiator drain plug 1 and unscrew the plug.
- Remove filler plug 2 from the expansion tank and fully open the heating control to ensure correct drainage.
- Let the cooling circuit drain entirely while ensuring that the ports do not get clogged.
- Check the condition of the hoses as well as the fastening devices and change the hoses if necessary.
- Rinse the circuit with clean water and use a cleaning agent if necessary.

### FILLING WITH COOLANT

- Refit and tighten the radiator drain plug 1 (tightening torque 15 ft-lbs ±1.5 ft-lbs 20 N.m ±2 N.m).
- Slowly fill the circuit with coolant (◁ LUBRICANTS AND FUEL) up to the middle of the expansion tank 3 by the filler hole 4.
- Refit the filler plug 2.
- Run the engine at idle for a few minutes.
- Check for any possible leaks.
- Check the level and refill if necessary.

https://truckmanualshub.com/

## REPLACE — Rear axle differential oil

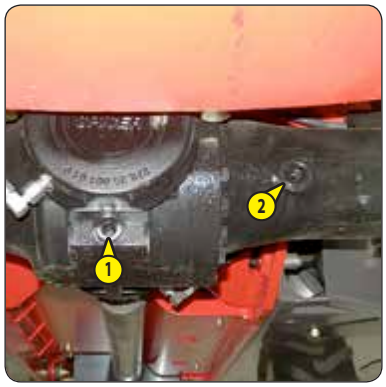


Place the lift truck on level ground with the engine stopped and the still warm differential oil.

**IMPORTANT**

*Dispose of the drain oil in an ecological manner.*

- Place a container under drain plug 1 and unscrew the plug.
- Remove level and filling plug 2 to ensure correct drainage.
- Refit and tighten the drain plug 1 (tightening torque 25 - 36 ft-lbs 34 - 49 N.m).
- Fill up with oil (◁ LUBRICANTS AND FUEL) through filler hole 2.
- The level is correct when the oil level is flush with the edge of the hole.
- Check for any possible leaks at the drain plug.
- Refit and tighten the level and filling plug 2 (tightening torque 25 - 36 ft-lbs 34 - 49 N.m).

## REPLACE — Front wheel reducer oil

## REPLACE — Rear wheel reducer oil

Place the lift truck on level ground with the engine stopped and the reducers' oil still warm.

**IMPORTANT**

*Dispose of the drain oil in an ecological manner.*

- Drain and change the oil of each wheel reduction gear.
- Place drain plug 1 in position A.
- Place a container under the drain plug and unscrew the plug.
- Let the oil drain fully.
- Place the drain port in position B, i.e. in a level port.
- Fill up with oil (◁ LUBRICANTS AND FUEL) through level hole 1.
- The level is correct when the oil level is flush with the edge of the hole.
- Refit and tighten the drain plug (tightening torque 25 - 36 ft-lbs 34 - 49 N.m).

https://truckmanualshub.com/

CHECK Silentblocks **

CHECK Valve lash **

CHECK Injectors **

CHECK Exhaust gas recirculation cooler "EGR" **

CHECK Casing gas recycling valve **

CHECK Brake system pressure *

CHECK Boom pad wear *

CHECK Condition of wiring harnesses and cables *

CHECK Lights and signals *

CHECK Warning indicators *

CHECK Condition of the rear-view mirrors *

CHECK Cabin structure *

CHECK Frame structure *

CHECK Attachment carriage *

CHECK Condition of attachments *

https://truckmanualshub.com/

| | |
|---|---|
| REPLACE | Oil separator rubber hoses ** |
| REPLACE | Exhaust particle filter pressure sensor rubber hoses "DPF" ** |
| REPLACE | Intake hose ** |
| REPLACE | Pressure detection hoses for the oversupply sensor ** |
| REPLACE | Exhaust gas recirculation cooler hoses "EGR" ** |
| REPLACE | Water hose ** |
| REPLACE | Lubrication hose ** |
| REPLACE | Radiator hoses and clamping collars ** |
| REPLACE | Fuel hoses and clamping collars ** |
| REPLACE | Brake fluid * |
| BLEED | Brake circuit * |
| ADJUST | Brake * |

** Engine service, consult your dealer.

* Consult your dealer.

https://truckmanualshub.com/

# ➲ ❸ 2000H - PERIODIC SERVICE - EVERY 2000 HOURS OF SERVICE OR 4 YEARS

**ALSO PERFORM THE 500 HOUR AND 1000 HOUR PERIODIC MAINTENANCE OPERATIONS.**

## CHECK — Wheel nut tightening torques

- Check the condition of the tyres, to detect cuts, blisters, wear, etc.
- Check the tightening torque of the wheel nuts with a torque wrench.
  - Front wheels: 465 ± 70 ft-lbs (630 ± 94 N.m)
  - Rear wheels: 465 ± 70 ft-lbs (630 ± 94 N.m)

## REPLACE — Dry air filter safety cartridge

**⚠ IMPORTANT ⚠**

*The safety cartridge replacement frequency is given for information only. It must be changed every second time the dry air filter cartridge is changed.*

- For the dismantling and refitting of the cartridge (◁ 1000 HOURS: REPLACE Air filter cartridge).
- Remove the dry air filter safety cartridge 1 carefully, to minimise dust fall.
- Clean the gasket surface on the filter with a damp, clean lint-free cloth.
- Check the condition of the new safety cartridge before fitting (◁ FILTER ELEMENTS AND BELTS).
- Insert the cartridge in the filter axis and push the cartridge pressing against the outer edge and not the centre.

https://truckmanualshub.com/



Place the lift truck on level ground with the engine stopped.

**IMPORTANT**

*Raise the boom and place the boom safety wedge on the rod of the lifting cylinder (1 - OPERATING AND SAFETY INSTRUCTIONS: LIFT TRUCK MAINTENANCE INSTRUCTIONS).*
*Before any intervention, thoroughly clean the area surrounding the drain and filler plugs.*
*Dispose of the drain oil in an ecological manner.*
*Use a very clean container and funnel and clean the underside of the oil drum before filling.*

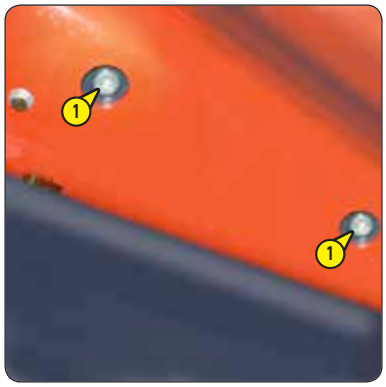


**DRAINING THE OIL**

- Place a container under drain plugs 1 and unscrew them.
- Remove the filler plug 2 to ensure correct drainage.

**REPLACING THE BRAKE ACCUMULATOR UNIT FILTER**

- Remove the cover plate 3.
- Unscrew plug 4, remove and replace the filter with a new one (FILTER ELEMENTS AND BELTS).
- Refit and tighten the plug 4 (tightening torque 51 - 59 ft-lbs 70 - 80 N.m).
- Refit cover plate 3.

**FILLING WITH OIL**

- Clean and refit the drain plugs 1 (tightening torque 21 - 29 ft-lbs 29 - 39 N.m).
- Fill up with oil (LUBRICANTS AND FUEL) through filler hole 5.
- Observe the oil level on dipstick 6, the oil level should be at the level of the red dot.
- Check for any possible leaks at the drain plugs.
- Refit the filler plug 2.

https://truckmanualshub.com/

**CHECK** — **Radiator ***

**CHECK** — **Transmission pressures ***

**CHECK** — **Steering ***

**CHECK** — **Steering swivel joints ***

**CHECK** — **Brake pad and brake disk wear ***

**CHECK** — **Condition of boom assembly ***

**CHECK** — **Bearings and bushings ***

**CHECK** — **Condition of hoses and flexible pipes ***

**CHECK** — **Condition of cylinders (leakage, rods) ***

**CHECK** — **Hydraulic circuit pressures ***

**CLEAN** — **Air conditioning (OPTION) ***

**CLEANING CONDENSER AND EVAPORATOR COILS**

**CLEANING CONDENSATE TRAY AND RELIEF VALVE**

**COLLECTING COOLANT TO REPLACE DRIER FILTER**

**REFILLING WITH COOLANT AND CHECKING THE THERMOSTATIC CONTROL AND PRESSURE SWITCHES**

NOTE: When opening the evaporator unit, remember to replace the cover seal.

**⚠ IMPORTANT ⚠**

*DO NOT ATTEMPT TO REPAIR ANY PROBLEMS YOURSELF. ALWAYS REFER TO YOUR DEALER WHEN REFILLING CIRCUITS, AS THEY HOLD THE CORRECT SPARE PARTS, AS WELL AS HAVING THE NECESSARY TECHNICAL KNOWLEDGE AND TOOLS.*

*In any of the following circumstances, call a doctor.*

*If inhaled, take the victim to fresh air.*
*If there is contact with the skin, wash immediately with plenty of water .*
*If there is frostbite, apply a sterile dressing.*
*If there is contact with the eyes, rinse with clear water for 15 minutes.*

IMPORTANT INFORMATION REGARDING THE COOLANT USED

- This product contains fluorinated greenhouse gases covered by the Kyoto Protocol.
- Coolant type: R134A; it is colourless and odourless and heavier than air. Its GWP (Global Warming Potential) is 1430.
- Do not allow the gases to escape into the atmosphere. Do not open the circuit under any circumstances, as this could cause refrigerant to escape.

- The compressor has a fluid level gauge; never unscrew this gauge because it would depressurise the system. The fluid level should only be checked when draining the system.

**REPLACE** — **Compressor belt (Air Conditioning OPTION) ***

** Consult your dealer.*

https://truckmanualshub.com/

## ➲ ❹ 3000H - PERIODIC SERVICE - EVERY 3000 HOURS OF SERVICE OR 6 YEARS

ALSO PERFORM THE 500 HOUR AND 1000 HOUR PERIODIC MAINTENANCE OPERATIONS.

| | |
|---|---|
| CHECK | Turbocharger ** |
| CHECK | Exhaust gas recirculation system "EGR" ** |
| CLEAN | Exhaust particle filter "DPF" ** |

** Engine service, consult your dealer.

https://truckmanualshub.com/



## CLEAN "Stationary lift truck" exhaust purification

**IMPORTANT**

*Exhaust purification is an automated procedure activated by the operator when the following indicator lamps are displayed:*

or +

- Park the lift truck in a safe and adequately ventilated place.
- Check the following points:
  - forward/reverse selector in neutral,
  - parking brake applied,
  - boom angle less than 5°,
  - accelerator pedal released,
  - hand throttle not used (option),
- Check that the fuel level is sufficient.
- Start the lift truck and run the engine for a few minutes to bring it up to its operating temperature.
- Press the top of switch 1 for more than two seconds to begin the regeneration procedure.
- Lighting of the indicator lamp plus a beep conforms the start of the "stationary lift truck" exhaust purification procedure.
- The "wait" display will flash throughout the 'stationary lift truck' exhaust purification.
- Otherwise, "notice" will be displayed for 3 seconds indicating a fault in the procedure. In this event check the positioning of the lift truck and contact your dealer if necessary.
- At the end of the procedure, indicator lamps + go out.
- During the procedure the engine speed increases to approx. 1800 rpm, and the indicator lamp comes on when the exhaust particle filter gases reach a high temperature.

**IMPORTANT**

*The exhaust sublimation procedure must only be stopped if absolutely necessary.*
*The procedure stops automatically if the operator:*
*- activates the hydraulic control joystick,*
*- engages forward or reverse gear,*
*- switches off the engine,*
*- or pressing on the top of the switch 1.*

- The time taken for exhaust purification varies (between 15 and 30 minutes) according to several criteria, such as:
  - the level of clogging of the filter,
  - the ambient temperature,
  - the fuel quality and type of engine oil,
  - the number of exhaust particle filter automatic regeneration requests previously cancelled.
- The engine will return to its initial idling speed to indicate that the procedure has finished.

**IMPORTANT**

*Once the exhaust sublimation procedure is completed, leave the engine idling for a few minutes to lower the temperature before switching off the ignition.*

https://truckmanualshub.com/



For this operation, we advise you to use the MANITOU hydraulic jack Part No. 505507 and the MANITOU safety support prop Part No. 554772.

**⚠ IMPORTANT ⚠**

*In the event of a wheel being changed on the public highway, secure the lift truck vicinity:*

- Stop the lift truck, if possible on firm, level ground.
- Stop the lift truck (◁ 1 - OPERATING AND SAFETY INSTRUCTIONS: DRIVING INSTRUCTIONS UNLADEN AND LADEN).
- Switch on the hazard warning lights.
- Immobilise the lift truck in both directions on the axle opposite to the wheel to be changed.
- Unlock the nuts of the wheel to be changed.
- Place the jack under the flared axle tube, as near as possible to the wheel and adjust the jack.
- Raise the wheel until it is clear of the ground and place the safety support under the axle.
- Completely unscrew the wheel nuts and remove them.
- Free the wheel by reciprocating movements and roll it to the side.
- Slip the new wheel on the wheel hub.
- Hand-tighten the nuts, grease them if necessary.
- Remove the safety support and lower the lift truck with the jack.
- Tighten the wheel nuts with a torque wrench (◁ 2000H - PERIODIC SERVICE - EVERY 2000 HOURS OF SERVICE OR EVERY 4 YEARS) for the tightening torque.

https://truckmanualshub.com/

## REPLACE — Battery failure

**⚠ IMPORTANT ⚠**

*Operate the battery cut-off for a minimum of 30 seconds after having switched off the ignition with the ignition key.*
*Handling and servicing a battery can be dangerous, take the following precautions:*
*- Wear protective goggles.*
*- Keep the battery horizontal.*
*- Never smoke or work near a naked flame.*
*- Work in a well-ventilated area.*
*- In the event of electrolyte being spilled onto the skin or splashed in the eyes, rinse thoroughly with cold water for 15 minutes and call a doctor.*

- Open the engine cover.
- Bring a backup battery of the same type as that of the lift truck, together with battery cables.
- Connect the backup battery according to the correct polarity with the (-) on the engine earth 1 and the (+) on the (+) of starter 2.
- Start the lift truck and remove the cables as soon as the engine is running.

**⚠ IMPORTANT ⚠**

*Raise the boom and place the boom safety wedge on the rod of the lifting cylinder (◁ 1 - OPERATING AND SAFETY INSTRUCTIONS: LIFT TRUCK MAINTENANCE INSTRUCTIONS).*

- Remove the protective casing 3.
- Change the battery 4.

## ADJUST — Front headlights

### RECOMMENDED SETTING

(as per standard ECE-76/756 76/761 ECE20)

Adjustment of -2 % of the dipped beam harness relative to the horizontal axis of the headlight.

### ADJUSTMENT PROCEDURE

- Place the unladen lift truck in the transport position and perpendicular to a white wall on flat, level ground.
- Check the tyre pressures (◁ 2 - DESCRIPTION: TYRES).
- Place the forward/reverse selector in neutral.

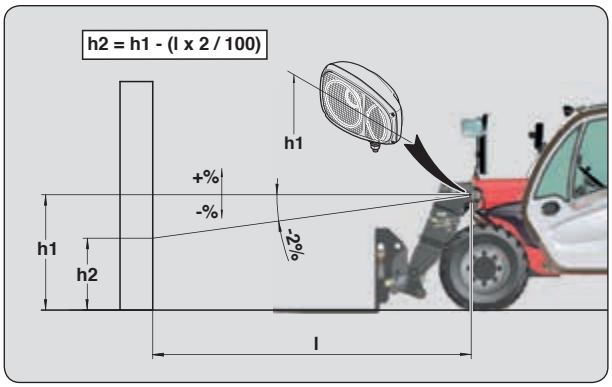


### CALCULATING THE HEIGHT OF THE DIPPED BEAM (H2)

- h1 = Height of the dipped beam in relation to the ground.
- h2 = Height of the adjusted beam.
- l = Distance between the dipped beam and the white wall.

https://truckmanualshub.com/

https://truckmanualshub.com/



## TOW OR WINCH — Lift truck

**IMPORTANT**

*If the lift truck is not on level ground, chock it so that it does not descend the slope.*
*The lift truck must be towed very slowly (less than 5 km/h) and for as short a distance as possible (less than 100 m).*

For towing a lift truck, the high pressure limiters must be unlocked to avoid damaging the hydrostatic transmission, and the parking brake on the front axle must be released.

- Switch on lift truck ignition.
- Set the forward/reverse selector to neutral.
- Release the hand brake.

### UNLOCKING THE HIGH PRESSURE LIMITERS

- Open the engine cover.
- Loosen nuts 1 on the hydrostatic pump by no more than three turns.

### RELEASING THE PARKING BRAKE ON THE FRONT AXLE

- Unscrew the screws 2 on the front axle, remove the shims 3 and fully re-tighten the screws 2.

### TOWING

- Switch on the hazard warning lights.
- Since there will be no steering or braking hydraulic assistance, operate the steering and pedal slowly, avoiding sudden or jerky movements.
- After towing, re-tighten nuts 1 (tightening torque 51 ft-lbs 70 N.m).
- Unscrew the screws 2, refit the shims 3 and re-tighten the screws 2 (tightening torque 70 - 85 ft-lbs 95 - 115 N.m).

## SLING — Lift truck

- Take into account the position of the lift truck centre of gravity for lifting.
- A = 3-11 ft-in (1200 mm) B = 3-7 ft-in (1100 mm)
- Place the hooks in the fastening points 1 provided.

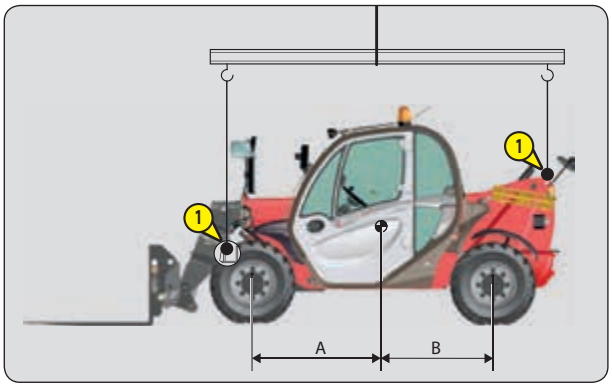

https://truckmanualshub.com/



**⚠ IMPORTANT ⚠**

*Ensure that the safety instructions associated with the flatbed are complied with before loading the lift truck and that the driver of the carrier vehicle is informed of the dimensions and the weight of the lift truck (◁ 2 - DESCRIPTION: CHARACTERISTICS).*

*Ensure that the platform is of sufficient size and load capacity for transporting the lift truck.*

*Check also the allowable ground contact pressure of the platform relative to the lift truck.*

**⚠ IMPORTANT ⚠**

*For lift trucks equipped with a turbo-charged engine, block off the exhaust outlet to avoid rotation of the turbo shaft without lubrication when transporting the vehicle.*

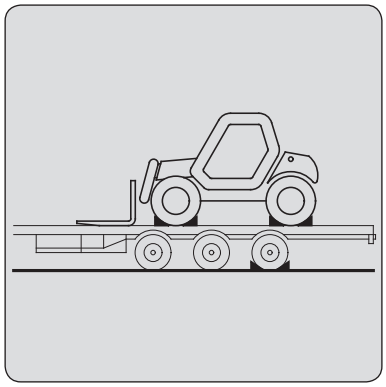

## LOADING THE LIFT TRUCK

- Block the wheels of the platform.
- Attach the loading ramps to the platform in such a way as to give the shallowest possible ramp angle for the lift truck.
- Load the lift truck parallel to the platform.
- Stop the lift truck (◁ 1 - OPERATING AND SAFETY INSTRUCTIONS: DRIVING INSTRUCTIONS UNLADEN AND LADEN).

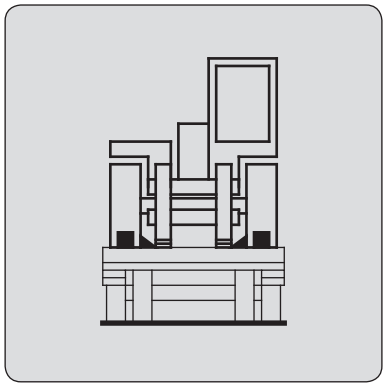

## STOWING THE LIFT TRUCK

- Fix the chocks to the platform at the front and at the back of each tyre.
- Also fix the chocks to the platform on the inside of each tyre.
- Secure the lift truck to the platform with sufficiently strong ropes to the anchoring points 1 provided.
- Tighten the ropes.

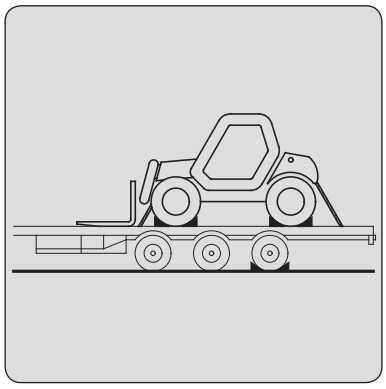

https://truckmanualshub.com/

https://truckmanualshub.com/

# 4 - OPTIONAL ADAPTABLE ATTACHMENTS FOR THE RANGE

https://truckmanualshub.com/

https://truckmanualshub.com/

# 4 - OPTIONAL ADAPTABLE ATTACHMENTS FOR THE RANGE


INTRODUCTION 4-3

PICKING UP THE ATTACHMENTS 4-4

TECHNICAL SPECIFICATIONS OF ATTACHMENTS 4-6

ATTACHMENT GUARDS 4-10


## INTRODUCTION

- Your lift truck must be used with interchangeable equipment. These items are called: ATTACHMENTS.
- A wide range of attachments is available, guaranteed by MANITOU and designed to fit your lift truck perfectly.

**⚠ IMPORTANT ⚠**

*Only attachments approved by MANITOU can be used with their lift trucks (◁ TECHNICAL SPECIFICATIONS OF ATTACHMENTS).*
*The manufacturer cannot be held responsible for any modifications or adaptations to attachments without its knowledge.*

- The attachments are delivered with a load chart concerning your lift truck. The operator's manual and the load chart should be kept in the places provided in the lift truck. For standard attachments, their use is governed by the instructions contained on this notice.

**⚠ IMPORTANT ⚠**

*Maximum loads are defined by the capacity of a lift truck taking account of the attachment's mass and centre of gravity.*
*Should the attachment have a lower capacity than the lift truck, never exceed this limit.*

- Some particular uses require the adaptation of the attachment which is not provided in the price-listed options. Optional solutions exist, consult your dealer.

**⚠ IMPORTANT ⚠**

*Depending on their size, certain attachments may, when the boom is lowered and retracted, come into contact with the front tyres and cause damage to them if excavation is activated in the direction of the discharge.*
*TO PREVENT THIS RISK, EXTEND THE TELESCOPE TO A SUFFICIENT EXTENT FOR THE PARTICULAR LIFT TRUCK AND ATTACHMENT SO THAT THIS CONTACT IS NOT POSSIBLE.*

### SUSPENDED LOAD

**⚠ IMPORTANT ⚠**

*Suspended loads MUST be handled with a lift truck designed for that purpose (◁ 1 - OPERATING AND SAFETY INSTRUCTIONS: LOAD HANDLING INSTRUCTIONS: H - PICKING UP AND PUTTING DOWN A SUSPENDED LOAD).*

https://truckmanualshub.com/

# PICKING UP THE ATTACHMENTS

## 1 - ATTACHMENT WITHOUT HYDRAULICS AND HAND LOCKING DEVICE

### FITTING AN ATTACHMENT

- Ensure that the attachment is in a position facilitating the locking to the carriage. If it is not correctly oriented, take the necessary precautions in order to move it safely.
- Check that the locking pin is in position in the bracket (Fig. A).
- Place the lift truck with the boom lowered in front of and parallel to the attachment, and tilt the carriage forwards (Fig. B).
- Bring the carriage under the locking tube of the attachment, slightly raise the boom, tilt the carriage backwards in order to position the attachment (Fig. C).
- Lift the attachment off the ground to facilitate locking.

### MANUAL LOCKING

- Take the locking pin on the bracket (Fig. A) and lock the attachment (Fig. D). Do not forget to fit the cotter pin.

### MANUAL UNLOCKING

- Proceed in the reverse order to MANUAL LOCKING, taking care to refit the locking pin in the bracket (Fig. A).

### REMOVING THE ATTACHMENT

- Proceed in the reverse order to FITTING AN ATTACHMENT, taking care to store the attachment flat on the ground and in the closed position.

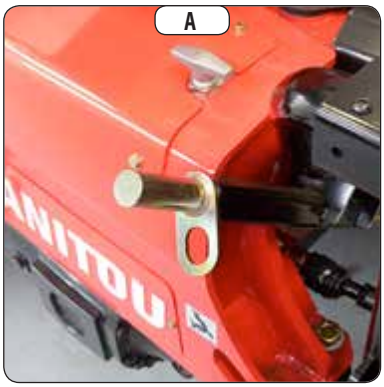

https://truckmanualshub.com/

## 2 - HYDRAULIC ATTACHMENT AND MANUAL LOCKING DEVICE

### FITTING AN ATTACHMENT

- Ensure that the attachment is in a position facilitating the locking to the carriage. If it is not correctly oriented, take the necessary precautions in order to move it safely.
- Check that the locking pin is in position in the bracket (Fig. A).
- Place the lift truck with the boom lowered in front of and parallel to the attachment, and tilt the carriage forwards (Fig. B).
- Bring the carriage under the locking tube of the attachment, slightly raise the boom, tilt the carriage backwards in order to position the attachment (Fig. C).
- Lift the attachment off the ground to facilitate locking.

### MANUAL LOCKING AND CONNECTION OF THE ATTACHMENT

**⚠ IMPORTANT ⚠**

*Make sure that the rapid connectors are clean and protect the holes which are not used, with the caps provided.*

- Take the locking pin on the bracket and lock the attachment (fig. D). Do not forget to fit the cotter pin.
- Stop the engine and keep the ignition on the lift truck.
- Release the pressure in the attachment hydraulic circuit by operating switch 1 on the distributor lever backwards and forwards 4 or 5 times.
- Connect the quick-release couplers according to the logic of the attachment's hydraulic movements.

### MANUAL RELEASE AND DISCONNECTION OF THE ATTACHMENT

- Proceed in the reverse order of paragraph MANUAL LOCKING AND CONNECTION OF THE ATTACHMENT, taking care to refit the locking pin in the bracket.

### REMOVING THE ATTACHMENT

- Proceed in the reverse order to FITTING AN ATTACHMENT, taking care to store the attachment flat on the ground and in the closed position.

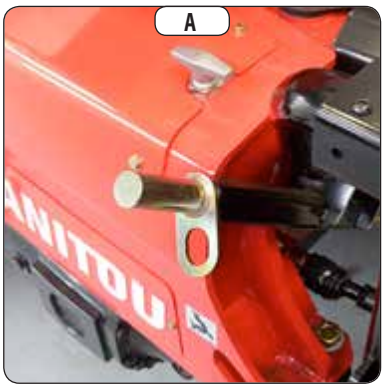

https://truckmanualshub.com/

# TECHNICAL SPECIFICATIONS OF ATTACHMENTS

## STANDARDISED TILTING FORK CARRIAGE

| | PFB 25 N MT-1020 S2 | PFB 25 N MT-1260 S2 |
|---|---|---|
| PART NO. | 571958 | 571959 |
| Rated capacity | 2300 kg | 2300 kg |
| Width | 1020 mm | 1260 mm |
| Ground | 71 kg | 80 kg |

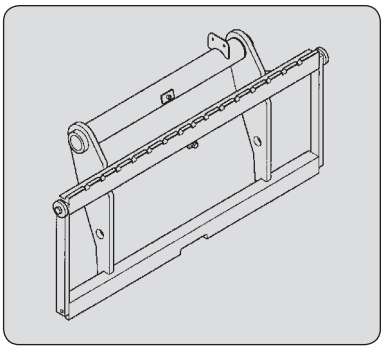

## STANDARDISED SIDE-SHIFT CARRIAGE

| | TDL 2T5 L1020 FEM2 | TDL 2T5 L1260 FEM2 |
|---|---|---|
| PART NO. | 751370 | 751371 |
| Rated capacity | 2300 kg | 2300 kg |
| Side-shift | 2x100 mm | 2x100 mm |
| Width | 1020 mm | 1260 mm |
| Ground | 54 kg | 67 kg |

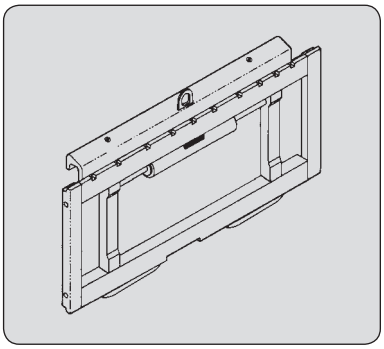

## STANDARDISED FORK

| | |
|---|---|
| PART NO. | 415835 |
| Section | 125x40x1200 mm |
| Ground | 76 kg |

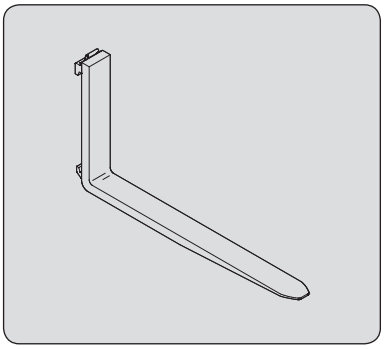

## LOAD BACK REST

| | | |
|---|---|---|
| PART NO. | 555320 | 570518 |
| Width | 1020 mm | 1260 mm |
| Ground | 31 kg | 35 kg |

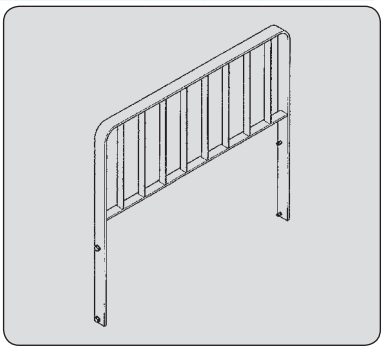

https://truckmanualshub.com/

## FLOATING FORK CARRIAGE

| | TFF 29 MT-1040 |
|---|---|
| **PART NO.** | **653340** |
| Rated capacity | 2900 kg |
| Width | 1040 mm |
| Ground | 285 kg |

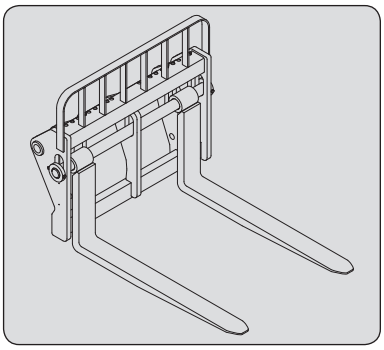

## FLOATING FORK

| | |
|---|---|
| **PART NO.** | **211919** |
| Section | 125x40x1200 mm |
| Ground | 62 kg |

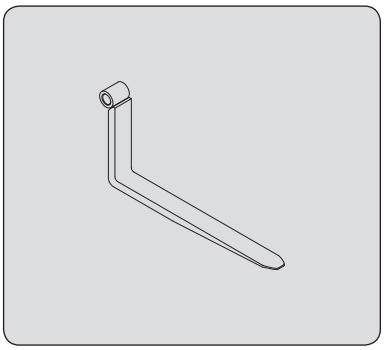

https://truckmanualshub.com/

## BUILDING BUCKET

| | CBC 650 L1850 |
|---|---|
| **PART NO.** | **654473** |
| Rated capacity | 676 l |
| Width | 1850 mm |
| Ground | 320 kg |

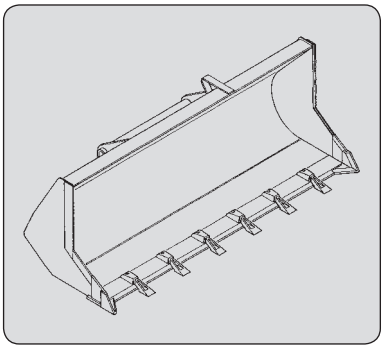

## LOADING BUCKET

| | CBR 730 L1850 |
|---|---|
| **PART NO.** | **571831** |
| Rated capacity | 735 l |
| Width | 1850 mm |
| Ground | 330 kg |

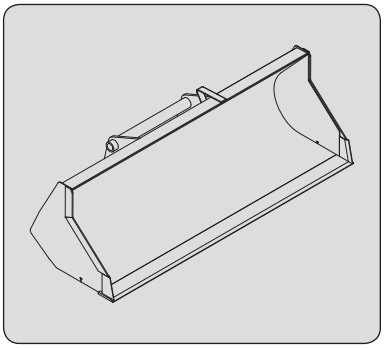

## MULTIPURPOSE BUCKET DISPLAY

| | CB4X1-700 L1950 |
|---|---|
| **PART NO.** | **751402** |
| Rated capacity | 700 l |
| Width | 1950 mm |
| Ground | 640 kg |

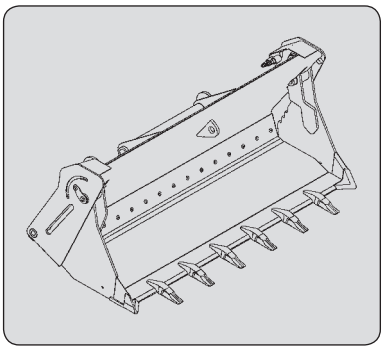

https://truckmanualshub.com/

## CONCRETE BUCKET (ADAPTABLE ON FORKS)

| | BB 500 S4 |
|---|---|
| PART NO. | 654409 |
| Rated capacity | 500 l/1300 kg |
| Width | 1100 mm |
| Ground | 205 kg |

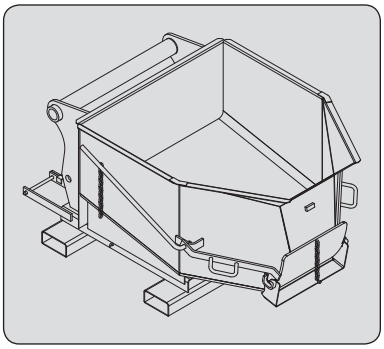

## CONCRETE BUCKET WITH SPOUT (ADAPTABLE ON FORKS)

| | BBHG 500 S4 |
|---|---|
| PART NO. | 751464 |
| Rated capacity | 500 l/1300 kg |
| Width | 1100 mm |
| Ground | 235 kg |

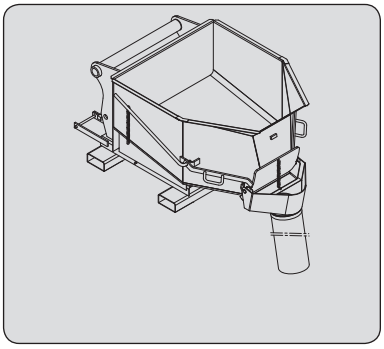

## SPOUT BUCKET (ADAPTABLE ON FORKS)

| | GL 600 S2 |
|---|---|
| PART NO. | 174373 |
| Rated capacity | 600 l/1440 kg |
| Ground | 290 kg |

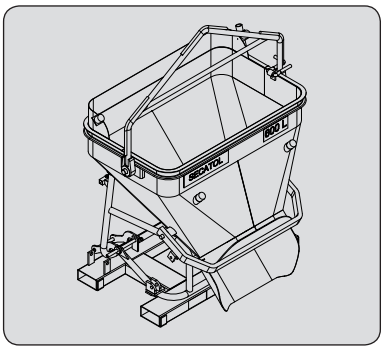

## JIB

| | PC 50 |
|---|---|
| PART NO. | 708544 |
| Rated capacity | 5000 kg |
| Ground | 120 kg |

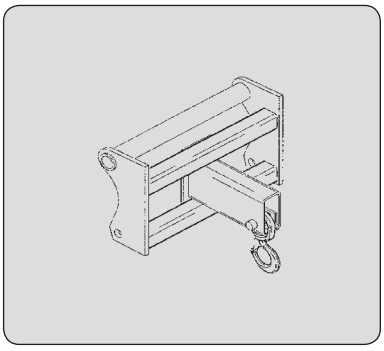

https://truckmanualshub.com/

# ATTACHMENT GUARDS

## FORK GUARD

**PART NO.** **227801**

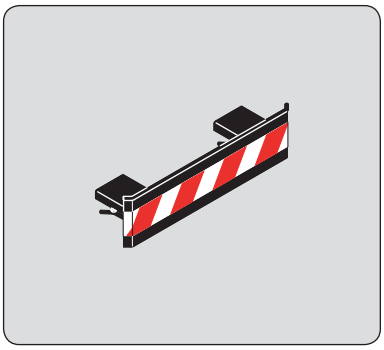

## FORK BLOCK FOR FLOATING FORK CARRIAGE

**PART NO.** **261210**

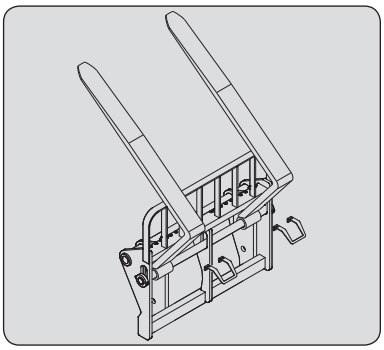

## BUCKET PROTECTOR

*Always ensure that the width of the protector you choose is less than or equal to the width of the bucket.*
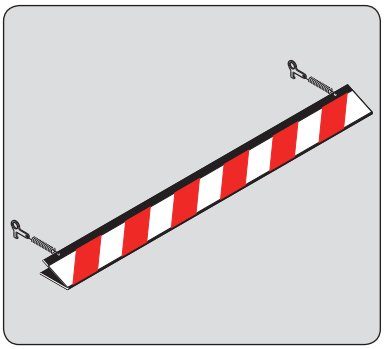
| | | | |
|---|---|---|---|
| **PART NO.** | **206734** | **206732** | **206730** |
| Width | 1375 mm | 1500 mm | 1650 mm |
| **PART NO.** | **235854** | **206728** | **206726** |
| Width | 1850 mm | 1950 mm | 2000 mm |
| **PART NO.** | **223771** | **223773** | **206724** |
| Width | 2050 mm | 2100 mm | 2150 mm |
| **PART NO.** | **206099** | **206722** | **223775** |
| Width | 2250 mm | 2450 mm | 2500 mm |