duma rent
https://truckmanualshub.com/
Torkonjestraat 23
8510 Marke
Belgium
056 / 222 111
info@dumarent.be
www.dumarent.be

MANITOU

BP 249 Z. I.
44158 ANCENIS CEDEX - FRANCE
TEL : 33 (0)2 40 09 10 11

YOUR DEALER

547362 EN (01 / 09 / 2005)

ACCESS PLATFORM

120 AETJ COMPACT

OPERATOR'S MANUAL

THIS INSTRUCTION LEAFLET MUST BE KEPT PERMANENTLY ON THE ACCESS PLATFORM AND BE READ AND UNDERSTOOD BY THE OPERATORS.

https://truckmanualshub.com/
Torkonjestraat 23
8510 Marke
Belgium
056 / 222 111
info@dumarent.be
www.dumarent.be

https://truckmanualshub.com/
Torkonjestraat 23
8510 Marke
Belgium
056 / 222 111
info@dumarent.be
www.dumarent.be

1st ISSUE DATE	27 / 06 / 2002

ISSUE DATE	COMMENTS
27 / 06 / 2002	First edition
06 / 12 / 2002	Update
17 / 02 / 2003	Update
03 / 06 / 2003	Update P. 3-5
02 / 09 / 2004	Update P. 2-5, 2-8, 2-10, 2-11, 2-16, 2-25, 2-27, 3 - MAINTENANCE (Maintenance periodicity)
09 / 11 / 2004	Update MANITOU
01 / 09 / 2005	120AETJ > 120AETJ COMPACT (From machine No 509104) Update P. 2-10, 2-19, 2-20, 2-27

https://truckmanualshub.com/
Torkonjestraat 23
8510 Marke
Belgium
056 / 222 111
info@dumarent.be
www.dumarent.be

https://truckmanualshub.com/
Torkonjestraat 23
8510 Marke
Belgium
056 / 222 111
info@dumarent.be
www.dumarent.be

TABLE OF CONTENTS

1 - INSTRUCTIONS 1 - 1

– ORIGIN SPARE PARTS 1 - 3

– INSTRUCTIONS OF USE TO THE DRIVER 1 - 4
- General instructions 1 - 4
- Driving instructions 1 - 6
- Handling instructions 1 - 8

– INSTRUCTIONS OF MAINTENANCE OF THE ACCES PLATFORM 1 - 9

– IDENTIFICATION OF THE ACCESS PLATFORM 1 - 11

– BEFORE THE FIRST OPERATION OF THE ACCESS PLATFORM 1 - 12

2 - DESCRIPTION 2 - 1

– CHARACTERISTICS 2 - 4

– DIMENSIONS 2 - 6

– INSTRUMENTS OF CONTROL AND COMMAND 2 - 8

– USE OF THE ACCESS PLATFORM 2 - 22

– PROCEDURE OF RESCUE 2 - 25

3 - MAINTENANCE 3 - 1

– FILTER ELEMENT 3 - 3

– LUBRICANTS 3 - 3

– PERIODICITIES OF MAINTENANCE 3 - 4
A : Reading of the horameter 3 - 5
B : Every day or every 5 hours of operation 3 - 6
C : Every 50 hours of operation 3 - 8
D : Every 100 hours of operation 3 - 10
E : Occasional maintenance 3 - 14

4 - MAINTENANCE HANDBOOK 4 - 1

https://truckmanualshub.com/
Torkonjestraat 23
8510 Marke
Belgium
056 / 222 111
info@dumarent.be
www.dumarent.be

https://truckmanualshub.com/
Torkonjestraat 23
8510 Marke
Belgium
056 / 222 111
info@dumarent.be
www.dumarent.be

1 - INSTRUCTIONS

https://truckmanualshub.com/
Torkonjestraat 23
8510 Marke
Belgium
056 / 222 111
info@dumarent.be
www.dumarent.be

https://truckmanualshub.com/
Torkonjestraat 23
8510 Marke
Belgium
056 / 222 111
info@dumarent.be
www.dumarent.be

ORIGIN SPARE PARTS

THE MAINTENANCE OF OUR ACCESS PLATFORMS SHOULD BE IMPERATIVELY REALIZED WITH ORIGIN PARTS.

BY ALLOWING THE USE OF NON-ORIGIN PARTS,

YOU RISK
- Legally, to engage your responsability in case of accident.
- Technically, to generate some failings of fonctioning or to reduce the lifespan of the equipment.

The use of counterfait parts or components non-certified by the manufacturer can put an end to the contractual guarantee conditions and causes the pull back of the conformity notification by the manufacturer.

BY USING THE ORIGIN PARTS IN THE OPERATIONS OF MAINTENANCE:

YOU PROTECTED YOURSELF LEGALLY
- The user who supplies somewhere else, makes this at his own risks.
- The user who modifies or makes modified his access platform by a service supplier, should consider that a new material is launching and he becomes responsible.
- The user who copies or makes copied the origin parts, lays himself to legal risks.
- The conformity notification engages only the manufacturer for the parts selected or realized under his control.
- The practical conditions of maintenance are fixed by the manufacturer. The fact that the user does not respect those, does not engage the manufacturer.

YOU TAKE ADAVNTAGE OF A KNOW-HOW **THE MANUFACTURER GIVES TO THE USER:**
- The know-how and his competence.
- The guarantee of the quality of the works realized.
- Replacement components of origin.
- An aid to the preventive maintenance.
- An effective aid to the diagnosis.
- Some improvements thanks to the experience return.
- The training of the operator staff.
- Only the manufacturer knows in details the conception of the access platform and so has the best technological capacities in order to make the maintenance of its.

THE ORIGIN SPARE PARTS ARE ONLY DISTRIBUTED BY MANITOU AND THE NETWORK OF THE CONCESSIONARIES.
The form of the network of the concessionaries can be supplied by phoning to the spare parts service:
TEL : +33 (0)2 40 09 10 21

https://truckmanualshub.com/
Torkonjestraat 23
8510 Marke
Belgium
056 / 222 111
info@dumarent.be
www.dumarent.be

INSTRUCTIONS OF USE TO THE DRIVER

WHEN YOU SEE THIS SYMBOL, IT MEANS THAT:

ATTENTION ! BE CAREFUL ! YOUR SAFETY OR ONE OF THE ACCESS PLATFORM IS ENGAGED.

GENERAL INSTRUCTIONS

A - INSTRUCTIONS LEAFLET

- Read carefully and understand the instructions leaflet.
- The instructions leaflet should be always in the access platform, in the space foreseen to that end, and in the language used by the driver.
- All the operations or maneuvrings, non-described in the instructions leaflet, are a priori proscribed.
- Respect the safety rules and the instructions described on the access platform.
- Replace absolutely all the plates or adhesives which are unreadable or ruined.

B - DRIVING PERMIT (CURRENT LAW FOR FRANCE)
(Or refer to the properly law of each country)

- Only the trained and qualified staff can use the access platform. This training is under the responsability of the employer.
- During the use of the access platform, and for reason of safety, the presence of a user on the ground is obligatory.
- Get to know with the access platform on the ground where it must maneuvre.
- The driver is not enable to authorize the driving of the access platform by another person.
- Moreover, the use must be according to the rules of the profession.
- Do not use the machine in the event of a wind with a speed superior to 45 km/h. A lateral wind pressure more than 40 kg can not be exerted on the arms of the access platform.
- The safety helmet is obligatory.
- It is strongly advisable to have a safety harness during the use of the access platform.
- Equip with an individual fire extinguisher the access platform maneuvring in an area without extinguishing objects. Some optional solutions exist, consult your agent or concessionary.

https://truckmanualshub.com/
Torkonjestraat 23
8510 Marke
Belgium
056 / 222 111
info@dumarent.be
www.dumarent.be

C - MAINTENANCE

- The user who observes that his access platform is not in a good state of operation or does not correspond to the safety rules, should inform immediately the official.

- It is forbidden to the driver to make himself all repairing or adjustement. He must keep his access platform in a perfect state of cleanliness if he is charged of this task.

- The safety devices can not be shorted out or disconnected.

- Make the daily maintenance (See chapter: B - EVERY DAY OR EVERY 5 HOURS OF OPERATION).

- For your safety and one of the other, you do not modify by yourself the structure, the adjustement of the different components of your access platform.
  . Hydraulic pressure
  . Calibration of the limiters
  . Addition of equipment
  In this eventuality, the responsability of the driver is not engaged.

- **For permitting the maintenance in state of conformity, we advise you to test regularly your access platform by your agent or concessionary, knowing that this periodicity is legally foreseen. (Refer to the current law).**

- Do not replace the battery by a lighter battery (Stability compromised).

IN THE EVENT OF NECESSITY, CONSULT YOUR AGENT OR CONCESSIONARY.

https://truckmanualshub.com/
Torkonjestraat 23
8510 Marke
Belgium
056 / 222 111
info@dumarent.be
www.dumarent.be

DRIVING INSTRUCTIONS

A - LAYOUT TO THE DRIVING BOX

- Wear clothes adapted to the driving of the access platform, avoid the floating wears.
- Never drive with damp hands or shoes or soiled with flat corps.
- Avoid to have the foot and in general all party of the corps, outside the access platform.
- The safety helmet is obligatory.
- It is strongly advisable to have a safety harness during the use of the access platform.

B - BEFORE THE ACCESS PLATFORM STARTING

- If it is a new access platform, see chapter: BEFORE THE FIRST OPERATION OF THE ACCESS PLATFORM in the party: 1 - INSTRUCTIONS AND RULE OF SAFETY.
- Test the good state of the tyres.
- Before starting the access platfrom, check the level of the hydraulic oil and the charge of the battery.
- However his experience, the user must get to know with the location and the use of all the control and command instruments before using the access platform.
- The access platform should be in transportation position (the arms completely bended down) before climbing up in it.
- The access platform can only be used on a flat ground. An asphalted covering is generally necessary.

https://truckmanualshub.com/
Torkonjestraat 23
8510 Marke
Belgium
056 / 222 111
info@dumarent.be
www.dumarent.be

C - DRIVING OF THE ACCESS PLATFORM

SAFETY RULES

- Do not use the access platform if the battery is discharged as far as to slow the movements, in certain case, the checking can stop the function.
- Do not use the access platform if it is not in a perfect state of operation or it does not have been checking.
- Wear clothes adapted to the driving of the access platform, avoid floating wears.
- In case of work in a busy area, forewarn all risk of accident.
- Look in the direction of the operation and always have a good visibility of the course.
- Stay, in all circumstances, boss of its speed.
- On humid, slippery, unequal ground, drive slowly.
- Go round the obstacles.
- The crossing of a pavement must be made only in transportation position.

Pay attention to the trenchs, scaffoldings and grounds recently diged or packed.

https://truckmanualshub.com/
Torkonjestraat 23
8510 Marke
Belgium
056 / 222 111
info@dumarent.be
www.dumarent.be

HANDLING INSTRUCTIONS

- The access platform can be maneuvred from the ground: forbid the approach of the access platform.
- The access platforms can not been used as cranes or lifts for the continuous transport of materials or people, and not as jacks or supports.
- Watch over, by lifting the access platform, that nothing nor no body interfere with the evolution, and not to make operatings errors.
- In case of work near aerial and electrical lines, make sure that the safety distance is adequate between the work area of the access platform and the electrical line. Refer to the current law.

You must inform yourself to your local electrical agency.

You should be electrocuted or seriously hurt if you work or put the access platform too near the electrical cables. It is deeply advised to make sure that the rules of safety on the site are according to the current local law concerning all types of works near the electrical lines.

- Do not try to make operations which are superior to the capacities of the access platform.
- It is forbidden to work over people.
- Watch over that the material in the access platform (tubes, cables, containers, ..) can not go out or fall. Do not pile up this material in focus to step over them.
- Do not use ladder or improvised constructions in the access platform to reach the superior heights.
- Do not use the desk base control to lift the access platform with people in the platform. This base control station is only used in case of rescue procedure (the ill-healths of the people in the platform) and the maintenance.

IN THE EVENT OF NECESSITY, CONSULT YOUR AGENT OR CONCESSIONARY.

https://truckmanualshub.com/
Torkonjestraat 23
8510 Marke
Belgium
056 / 222 111
info@dumarent.be
www.dumarent.be

MAINTENANCE INSTRUCTIONS OF THE ACCESS PLATFORM

MAINTENANCE INSTRUCTIONS

A - GENERAL

- Read carefully the instructions leaflet.
- Clean up the access platform or the concerned area before all operation.
- Wear clothes adapted for the maintenance of the access platform, avoid the jewellery and the floating clothes. If necessary, tie and protect your hair.

Watch over that the evacuation of the consumables and the spare parts must be made in all safety and ecological way.

- Make the necessary repairings, even minor, immediately.
- Repair all leakages, even minor, immediately.
- Do not try to loosen the connections, the hoses or an hydraulic component with the subpressure circuit.

The handling and the removal of the balancing valve equiping the jacks of your access platform, can be dangerous. A balancing valve does not be removed when the concerned jack is at rest and the hydraulic circuit under residual pressure.

This operation is possible only with certified staff.

- Remove the variator before all operation of soldering.
- Do not remove metallic parts on the battery.
- The electrical box can be open only by the authorized staff.
- The periodic control specified by the certified control services is necessary.
- Weld, position the weight as close as possible to the place to weld.

https://truckmanualshub.com/
Torkonjestraat 23
8510 Marke
Belgium
056 / 222 111
info@dumarent.be
www.dumarent.be

B - MAINTENANCE

- Clean up the access platform of all tracks of oil or grease.

- Clean up the access platform or the area concerned before all operation.

- Do not wash with a mechanism of high pressure near the electrical components.

if necessary, protect against the penetration of water, of vapor or cleaning products, the components susceptible of being damaged, particularly the electrical components and conexions.

- The maintenance in the conformity state of the access platform is obligatory.

- Make the daily maintenance (See chapter: B - EVERY DAY OR EVERY 5 HOURS OF OPERATION).

IDENTIFICATION OF THE ACCESS PLATFORM

Our political being a concern of constant improvement of our products. Some modifications can be introduced in our range of access platforms, without we must inform our customers.

At the time of all orders for spare parts or for all informations of a technical nature, always specify:

NOTE : *For communicate easily all these numbers, it is advised to write them in the space foreseen to this effect at the receipt of the access platform.*

A

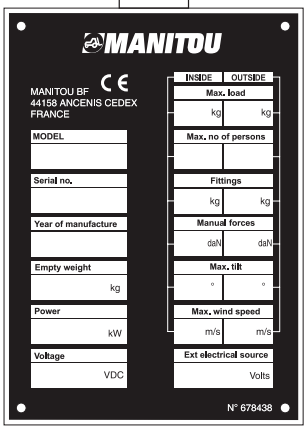

CONSTRUCTOR PLATE OF THE ACCESS PLATFORM (FIG. A)

- Type _____
- Serial number _____
- Year of production _____

https://truckmanualshub.com/
Torkonjestraat 23
8510 Marke
Belgium
056 / 222 111
info@dumarent.be
www.dumarent.be

BEFORE THE FIRST OPERATION OF THE ACCESS PLATFORM

INTRODUCTION

- Our access platform are realized with the concern to offer an important facility of maneuvre to the driver and a maximum of maintenance facility.
- But before the first operation of the access platform, the user must read carefully and understand the different chapters of this leaflet which will be realized to resolve all the problems of driving and maintenance. According to these instructions, the user be able to derive the best of the capacitites of the access platform.
- The user must inform himself of the positions and functions of the different instruments of control and command, before using the access platform.

Never use a new access platform before make the following checks.

GREASING

- Check the different points of greasing and the different levels (see chapter: PERIODICITY OF MAINTENANCE) and complete if necessary.

The filled up of the lubricants is made in factory for mean climatic uses, of : -15°C to +35°C. For more important uses, it must, before the first operation, drain and make again the filled up by using adapted lubricants in function of the ambient temperatures. (inform you, if necessary, to your agent or concessionary).

HYDRAULIC CIRCUIT

- Check that there are no leakage or ooze of oil to the jointings, hoses, tubes and connections by a visual test. If necessary, tighten or check the defective connections.
- Check the oil level in the tank.

TYRES

- Make sure of the perfect adjustment of the nuts of the wheels (see chapter: C - EVERY 50 HOURS OF OPERATION).

ELECTRICAL CIRCUIT

- Check the level and the specify gravity of the electrolyte in the battery.
- Look at the different components of the electrical circuit like the branchings and the fixings.

IN THE EVENT OF NECESSITY, CONSULT YOUR AGENT OR CONCESSIONARY

https://truckmanualshub.com/
Torkonjestraat 23
8510 Marke
Belgium
056 / 222 111
info@dumarent.be
www.dumarent.be

2 - DESCRIPTION

https://truckmanualshub.com/
Torkonjestraat 23
8510 Marke
Belgium
056 / 222 111
info@dumarent.be
www.dumarent.be

Torkonjestraat 23
8510 Marke
Belgium
056 / 222 111
info@dumarent.be
www.dumarent.be

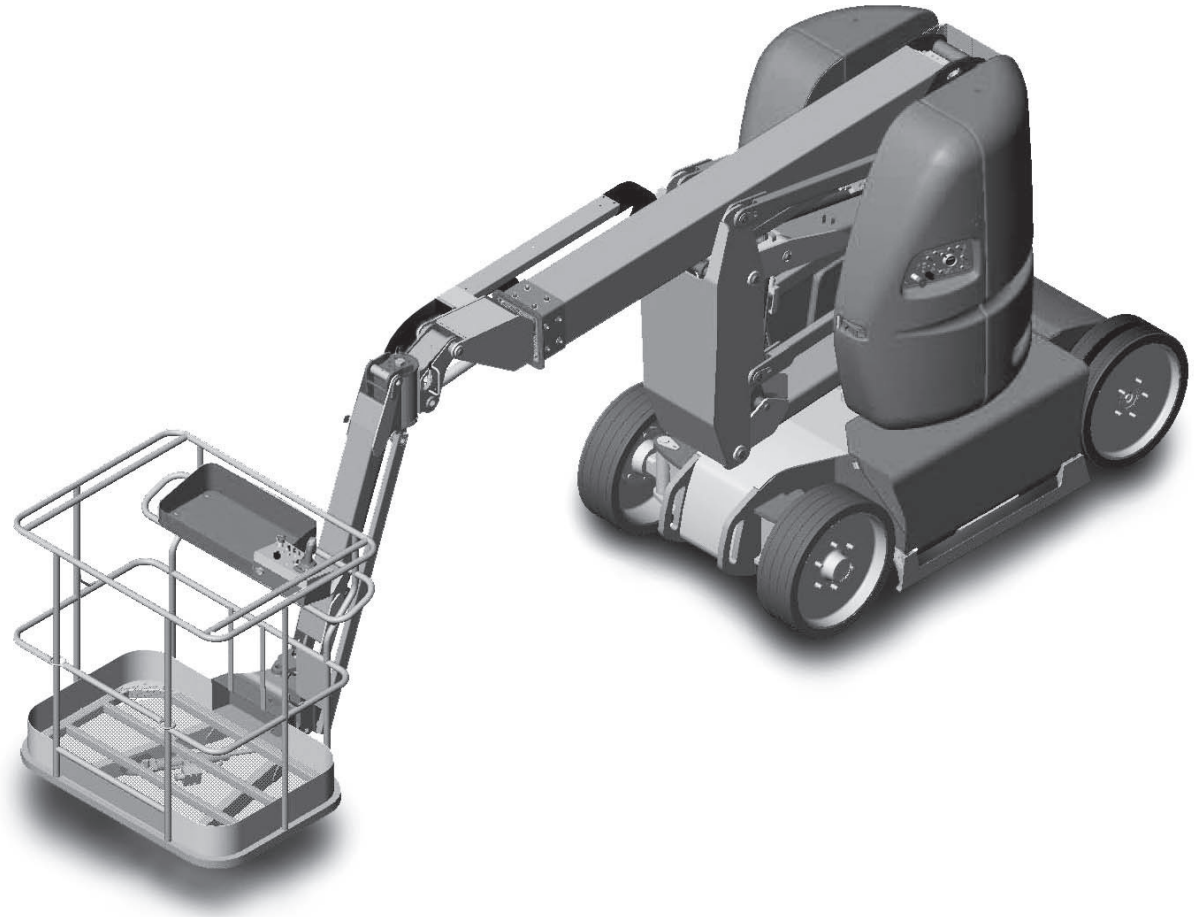

https://truckmanualshub.com/
Torkonjestraat 23
8510 Marke
Belgium
056 / 222 111
info@dumarent.be
www.dumarent.be

CHARACTERISTICS

ELECTRIC PUMP

- Power supply	48 V
- Power	3,6 KW
- Cubic capacity	4,8 cm3
- Pressure	200 bars

ELECTRICAL WHEELS MOTORS

- Type	**T 17 - 2 KW**

ELECTRICAL CIRCUIT

- Battery	48 V - 300 Ah
- Charger	48 V - 45 Ah (Mono)

FUSES

- Main card	10A
- Power	325A
- Electric pump	100A
- Emergency electric pump	100A

https://truckmanualshub.com/
Torkonjestraat 23
8510 Marke
Belgium
056 / 222 111
info@dumarent.be
www.dumarent.be

120 AETJ COMPACT

SPECIFICATIONS

- Use	Indoors and Outdoors
- Capacity	200 Kg including 2 people
- Maximum authorized wind speed	45Km/h
- Control system	Hydro-electric
- Turret rotation	350°
- Working speed	0,6 km/h
- Speed in transport	6 km/h
- Working height	11950 mm
- Height of floor	9950 mm
- Max. offset	7000 mm
- Weight of the access platform	
. Unloaded	6550 kg
. In nominal load	6780 kg
- Number of speed	2
- Negotiable slope	25%
- Max. permissible tilt	5% or 3°

TYRES

DIMENSIONS	TYPE	LOAD PER TYRE UNLADEN FRONT	LOAD PER TYRE UNLADEN REAR	WITH MAX. LOAD + OFF-CENTRING ON 1 WHEEL FRONT / REAR	CONTACT SURFACE OF 1 WHEEL WITH GROUND	STAMPING
600 X 190	TYRE	1655 KG	1620 KG	4200 KG	212 CM²	20 DAN/CM²

- Wheel nut tightening torque ; front wheels	34 daNm
- Wheel nut tightening torque ; rear wheels	22 daNm

DIMENSIONS

120 AETJ COMPACT

A1	5477
A2	3740
B	1200
C	2163
D	1650
E	104
F	2228
G	1550
H	3250
I	3340
J	2138

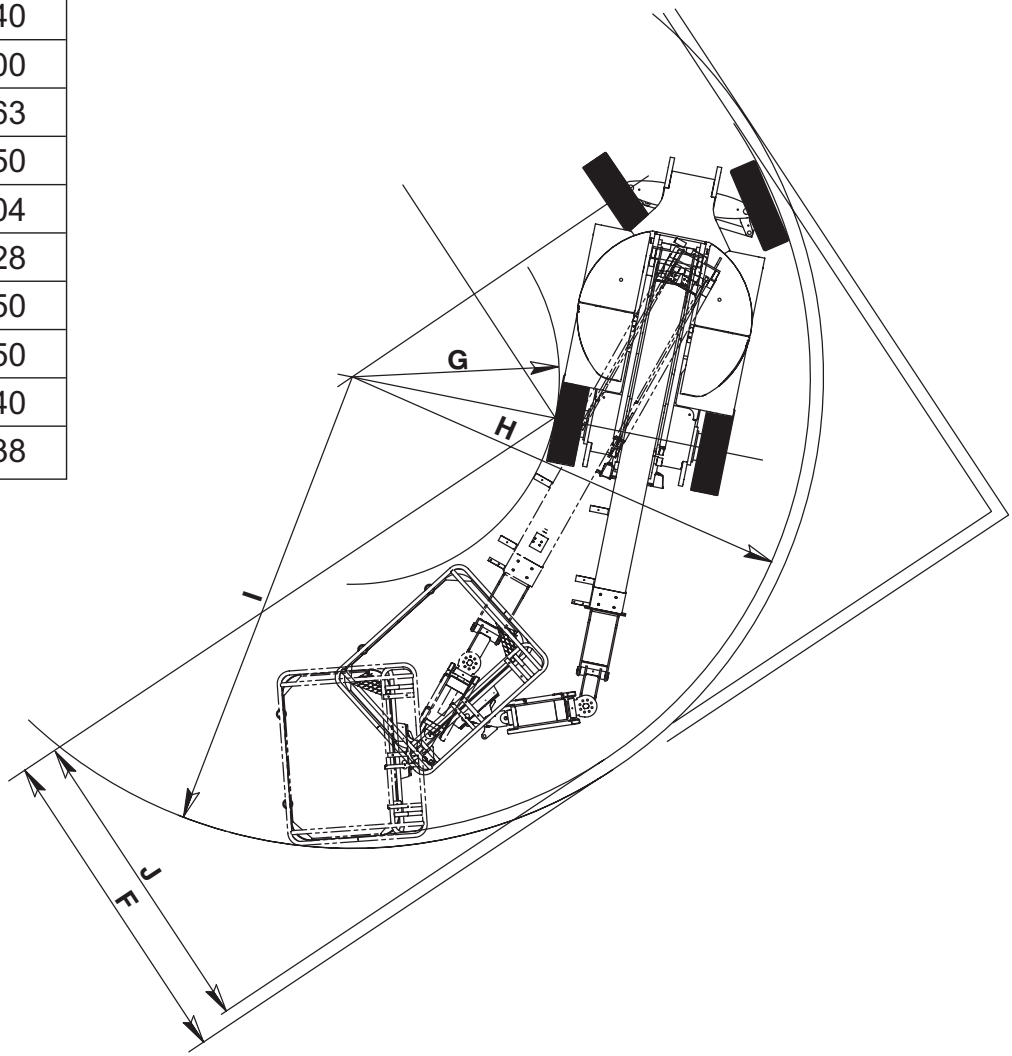

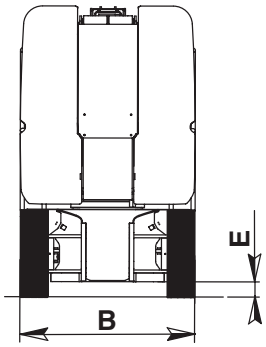

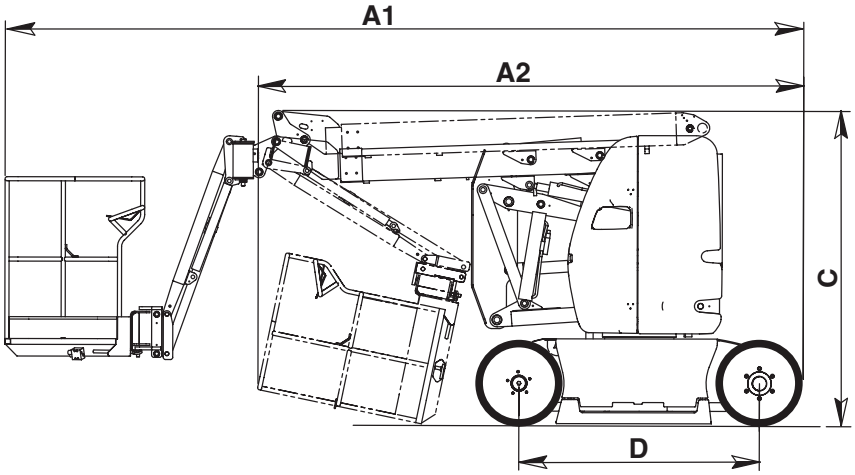

120 AETJ COMPACT

K1	2483
K2	3242
K3	6506
K4	4353
L1	9950
L2	8794
L3	4773
L4	595

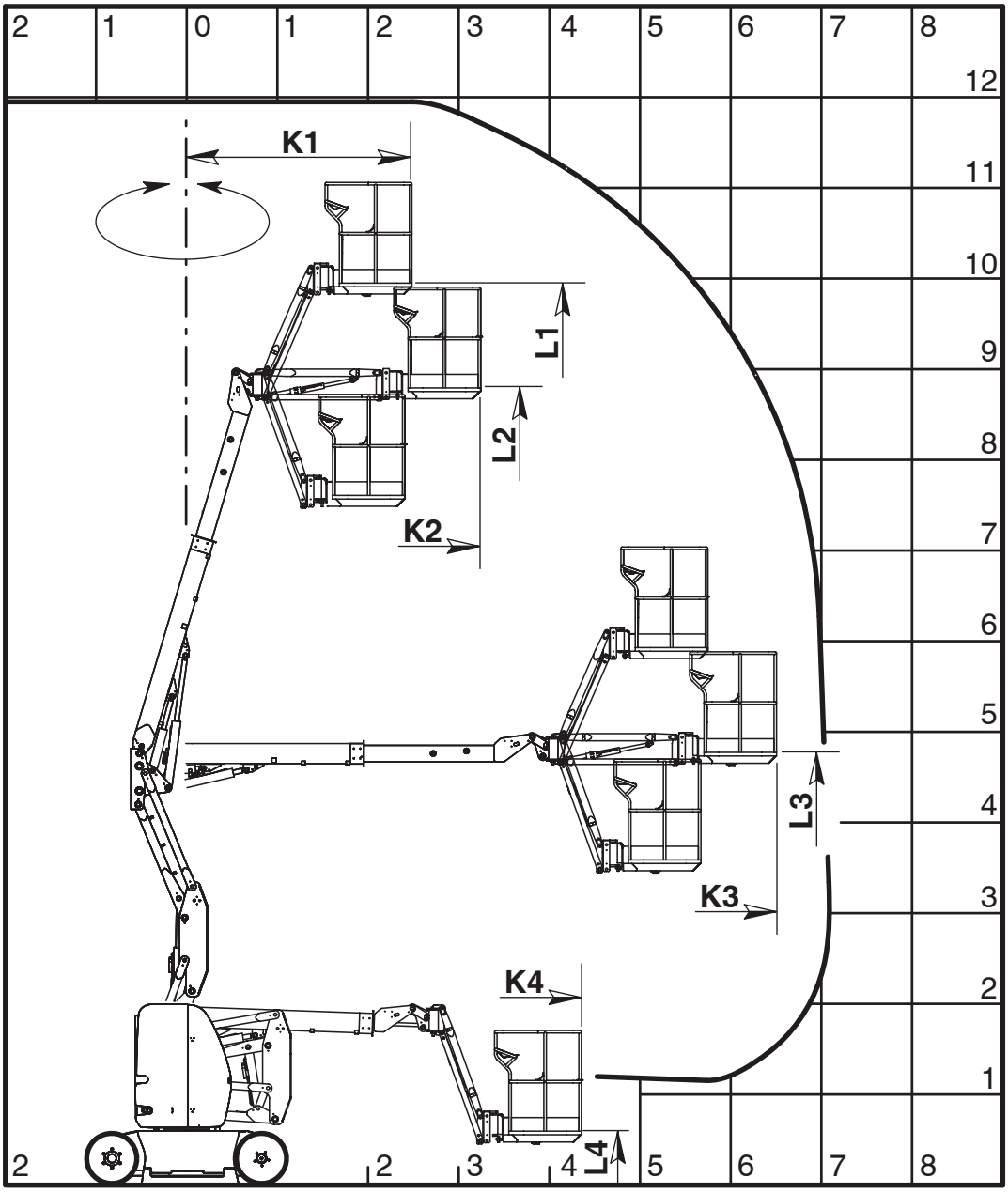

CONTROL AND COMMAND INSTRUMENTS

A - GROUND CONTROL POINT

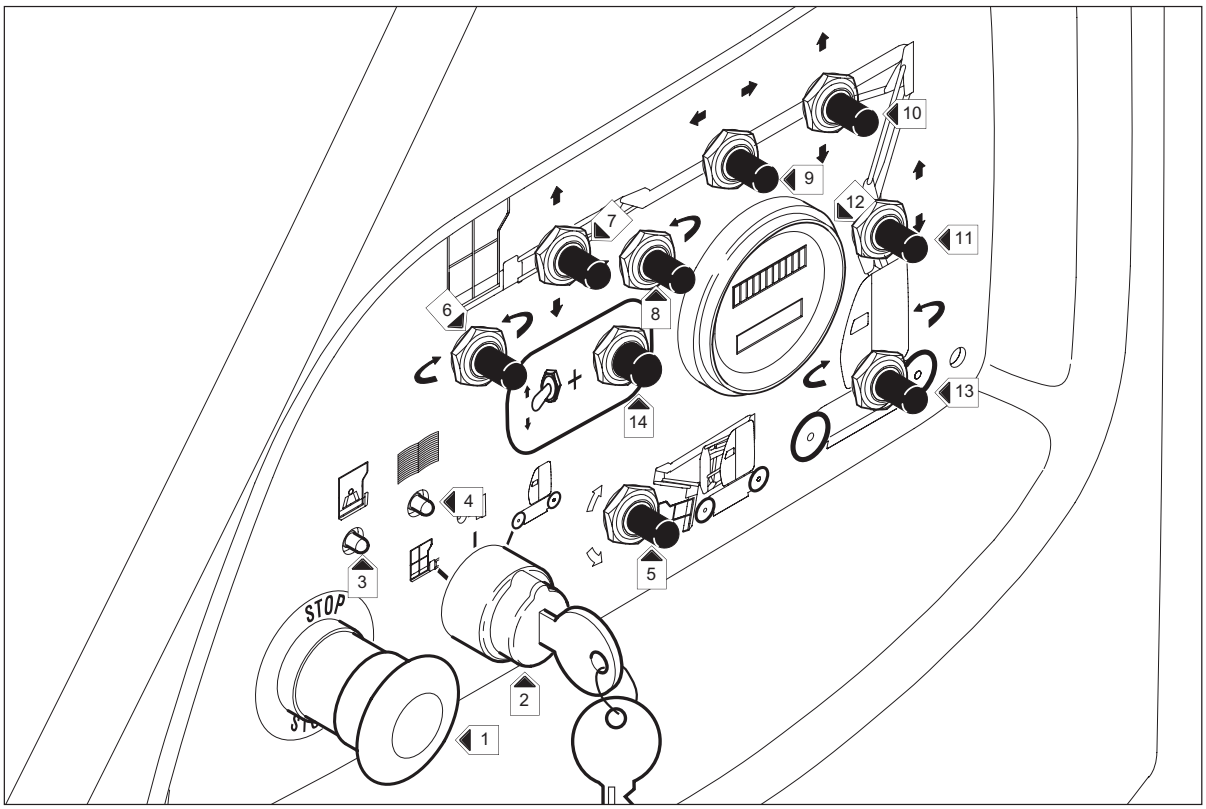

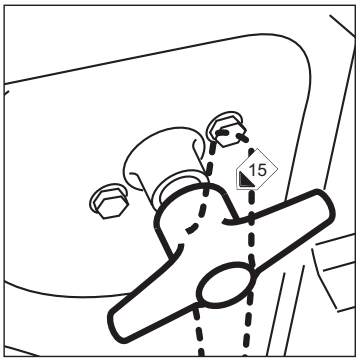

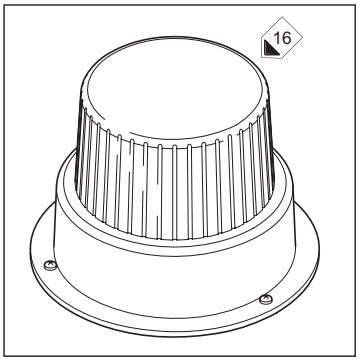

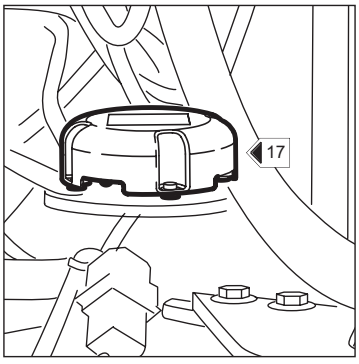

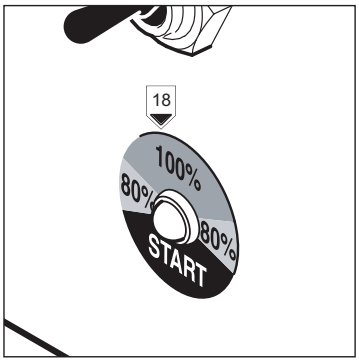

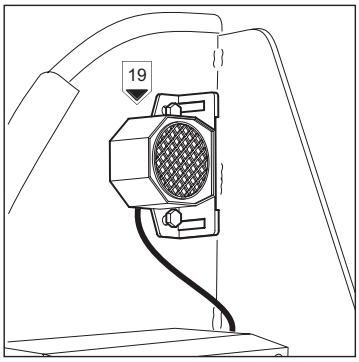

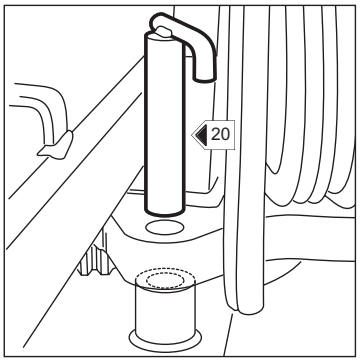

https://truckmanualshub.com/
Torkonjestraat 23
8510 Marke
Belgium
056 / 222 111
info@dumarent.be
www.dumarent.be

A - GROUND CONTROL POINT

1 - EMERGENCY STOP

2 - KEY SWITCH FOR SELECTION OF CONTROLS ON THE GROUND OR ON THE ACCESS PLATFORM

3 - OVERLOAD LAMP

4 - “MAINTENANCE MACHINE” LAMP AND VARIATOR DEFECTS

5 - INCLINATION CONTACTOR OF THE PLATFORM

6 - ROTATION CONTACTOR OF THE PLATFORM

7 - RAISE AND LOWER CONTACTOR OF THE EXTENSION ARM

8 - ROTATION SWITCH FOR ROTATING JIB (OPTION)

9 - OUTPUTS AND INPUTS CONTACTOR OF THE TELESCOPE

10 - RAISE AND LOWER CONTACTOR OF THE SUPERIOR ARM

11 - LOWER ARM LIFTING AND LOWERING SWITCH

12 - INDICATOR OF CHARGE OF THE BATTERY AND THE HORAMETER

13 - TURRET ROTATION CONTACTOR

14 - "DEAD MAN" BUTTON

15 - BATTERY SWITCH

16 - FLASHING LIGHT (OPTION)

17 - SLOPE SENSOR

18 - “STATE OF CHARGE OF THE BATTERY” LAMP

19 - SOUND ALARM HORN

20 - TURRET ROTATION BLOCKAGE

CONTROL AND COMMAND INSTRUMENTS

B - CONTROL POINT IN THE ACCESS PLATFORM

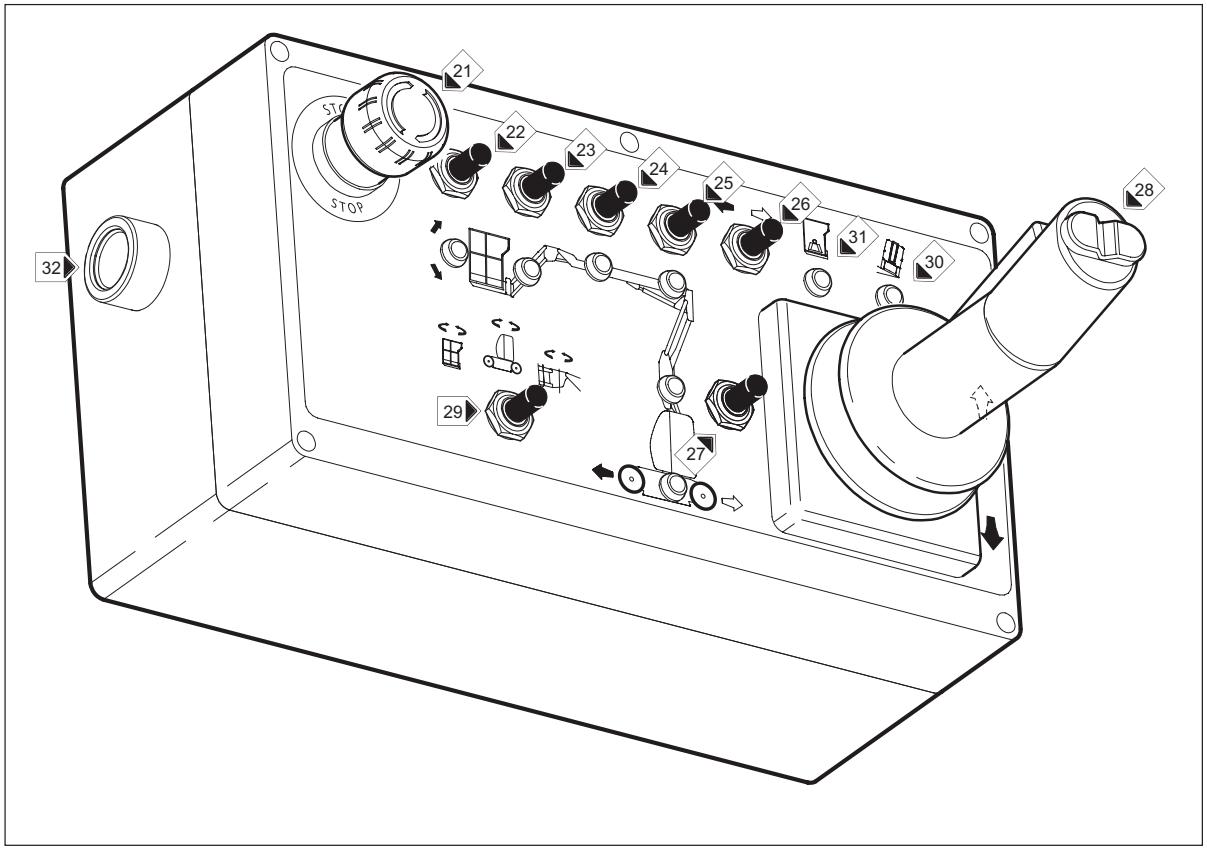

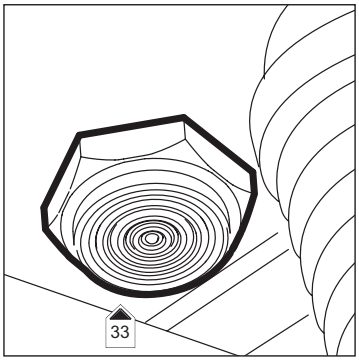

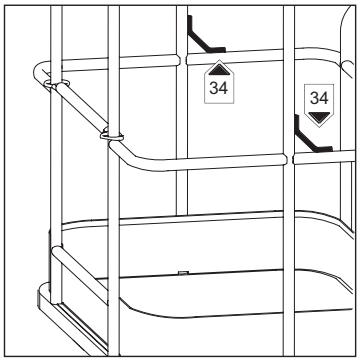

Torkonjestraat 23
8510 Marke
Belgium
056 / 222 111
info@dumarent.be
www.dumarent.be

B - CONTROL POINT IN THE ACCESS PLATFORM

21 - EMERGENCY STOP

22 - INCLINATION CONTACTOR OF THE PLATFORM

23 - RAISE AND LOWER CONTACTOR OF THE EXTENSION ARM

24 - OUTPUTS AND INPUTS CONTACTOR OF THE TELESCOPE

25 - RAISE AND LOWER CONTACTOR OF THE SUPERIOR ARM

26 - TRANSLATION CONTACTOR

27 - LOWER ARM LIFTING AND LOWERING SWITCH

28 - CONTROL SWITCH

29 - CONTACTOR OF SELECTION OF ROTATION

30 - SLOPE LAMP

31 - OVERLOAD LAMP AND VARIATOR DEFECTS

32 - COMMAND BUTTON OF THE SOUND ALARM HORN

33 - ALARM BUZZER

34 - POINTS FOR ATTACHING THE SAFETY HARNESS

NOTE: *The terms RIGHT-LEFT-FRONT-REAR apply to a user on the nacelle platform in the transportation position and looking straight ahead.*

Torkonjestraat 23
8510 Marke
Belgium
056 / 222 111
info@dumarent.be
www.dumarent.be

BASE CONTROL AND COMMAND INSTRUMENTS

1 - EMERGENY STOP

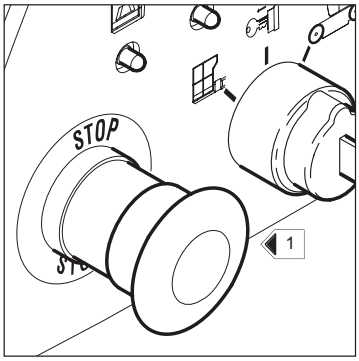

This switch is used to stop all the movements of the machine, in the event of a fault or of a danger.

- Press the button to stop all the movements.
- Turn the button a quater turn to the right to de-activate it. (the switch returns automatically to its original position).

This command takes priority in all circumstances, even when control is switched to the access platform.

2 - COMMANDS SELECTION KEY ON THE GROUND OR IN THE ACCESS PLATFORM

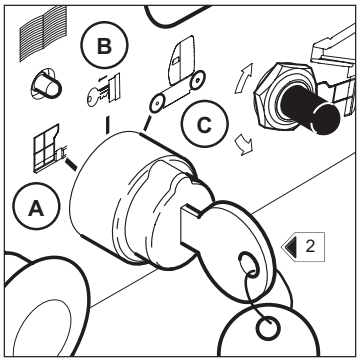

This is the control point selector.
A : - The commands is effected from the nacelle platform.
B : - Neutral position : the platform controls are idle (remove the key in this position)
C : - The commands are effected from the chassis unit.

3 - OVERLOAD LAMP

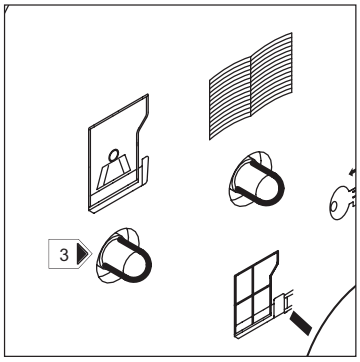

If the platform is overload (item 30 in the platform), this lamp comes on.

4 - "MAINTENANCE MACHINE" LAMP

- THIS LAMP HAS TWO FUNCTIONS:

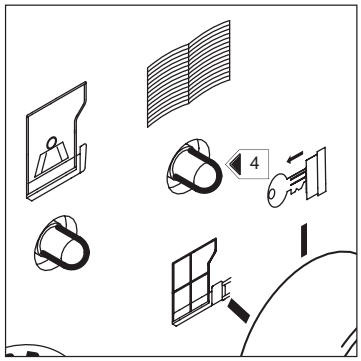

1. This lamp is controlled by a timer, which brings it on every 50 hours worked.
   When the lamp is on, this mean that the machine must be serviced (see chapter "PERIODICITY OF MAINTENANCE").

2. In the event of a fault, the number of flashes indicates the type of fault detected by the variator:
   - 1 flash : Variator parameter defect
   - 2 flashes : Command activated before the use
   - 3 flashes : Variator in short-circuit
   - 4 flashes : Defect contactors of power
   - 5 flashes : No-used
   - 6 flashes : Accelerator, control switch, potentiometer or wire of speed sensor
   - 7 flashes : Battery discharged
   - 8 flashes : Variator temperature over high
   - 9 flashes : Bobbin contactor in short-circuit
   - 12 flashes : Defect bus connection

5 - Inclination contactor of the platform

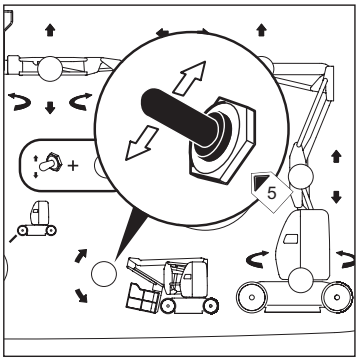

- This contactor is used for the correction of the horizontality of the platform or the complete re-folding of the platform in the transportation position.

CORRECTION OF THE PLATFORM UPWARD
- Place the base/basket switch in the base position, keep the "dead man" button pushed and push the switch 5 upwards.

CORRECTION OF THE PLATFORM DOWNWARD
- Place the base/basket switch in the base position, keep the "dead man" button pushed and push the switch 5 downwards.

6 - Platform rotation contactor

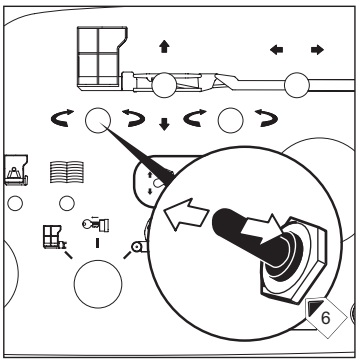

- This contactor is used to rotate the platform.

RIGHT ROTATION
- Place the base/basket switch in the base position, keep the "dead man" button pushed and push the switch 6 to the right.

LEFT ROTATION
- Place the base/basket switch in the base position, keep the "dead man" button pushed and push the switch 6 to the left.

7 - Raise and lower contactor of the extension arm

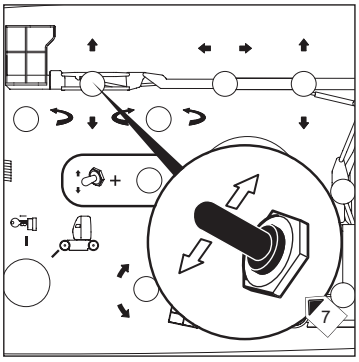

- This contactor is used to raise or lower the extension arm.

LIFTING OF THE EXTENSION ARM
- Place the base/basket switch in the base position, keep the "dead man" button pushed and push the switch 7 upwards.

LOWERING OF THE EXTENSION ARM
- Place the base/basket switch in the base position, keep the "dead man" button pushed and push the switch 7 downwards.

8 - Rotation contactor for option rotated jib

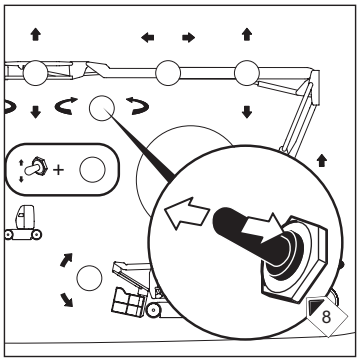

- This contactor is used to rotate the platform and the extension arm.

RIGHT ROTATION
- Place the base/basket switch in the base position, keep the "dead man" button pushed and push the switch 8 to the right.

LEFT ROTATION
- Place the base/basket switch in the base position, keep the "dead man" button pushed and push the switch 8 to the left.

9 - Telescope outputs and inputs contactor

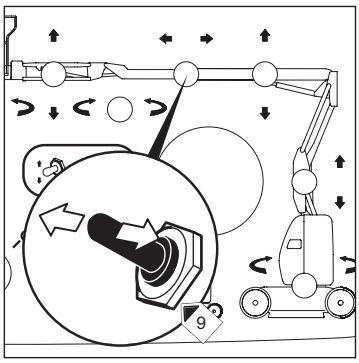

- This contactor is used to outputs and inputs of the telescope arm.

OUTPUTS OF THE TELESCOPE ARM
- Place the base/basket switch in the base position, keep the "dead man" button pushed and push the switch 9 to the left.

INPUTS OF THE TELESCOPE ARM
- Place the base/basket switch in the base position, keep the "dead man" button pushed and push the switch 9 to the right.

10 - Raise and lower contactor of the superior arm

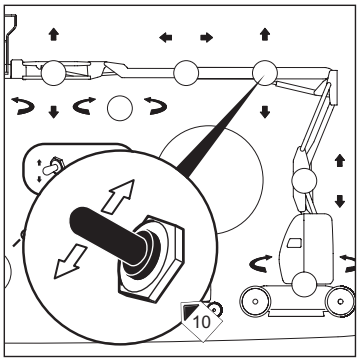

- This contactor is used to raise or lower the superior arm.

LIFTING OF THE SUPERIOR ARM
- Place the base/basket switch in the base position, keep the "dead man" button pushed and push the switch 10 upwards.

LOWERING OF THE SUPERIOR ARM
- Place the base/basket switch in the base position, keep the "dead man" button pushed and push the switch 10 downwards.

11 - Raise and lower contactor of the inferior arm

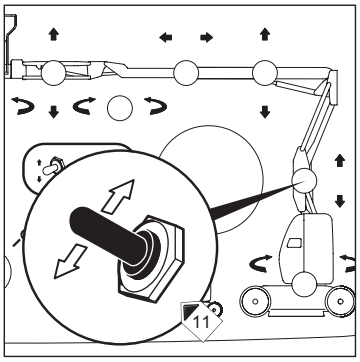

- This contactor is used to raise and lower the inferior arm.

LIFTING OF THE SUPERIOR ARM
- Place the base/basket switch in the base position, keep the "dead man" button pushed and push the switch 11 upwards.

LOWERING OF THE INFERIOR ARM
- Place the base/basket switch in the base position, keep the "dead man" button pushed and push the switch 11 downwards.

12 - Battery charge indicator and the horameter

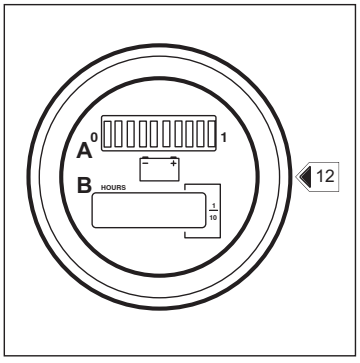

A - BATTERY CHARGE INDICATOR

· BATTERY CHARGED
- Only the green lamp on the right is on.

· BATTERY DISCHARGED
- One of the two orange or red lamp on the left are on, meaning that the battery needs to be re-charged (see chapter “MAINTENANCE PERIODICITY”).

B - HORAMETER INDIACTOR
This shows the number of hours worked by the access platform.

13 - Turret rotation contactor

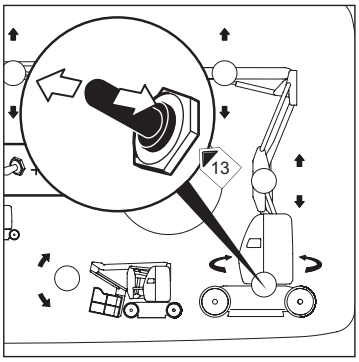

- This contactor is used to rotate the turret.

RIGHT ROTATION
- Place the base/basket switch in the base position, keep the "dead man" button pushed and push the switch 13 to the right.

LEFT ROTATION
- Place the base/basket switch in the base position, keep the "dead man" button pushed and push the switch 13 to the left.

14 - "Dead man" button

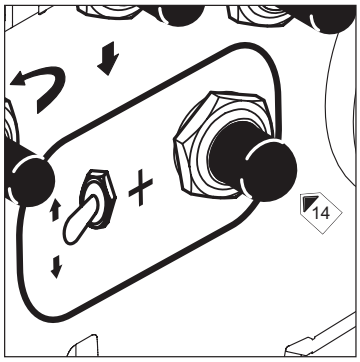

- Press this button continuously to activate the lifting and rotation functions.

15 - Battery switch

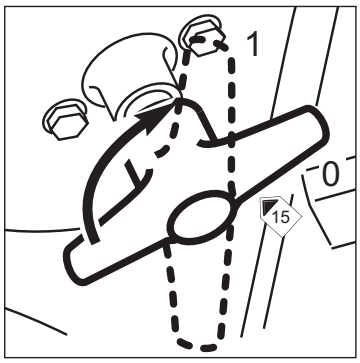

- The battery swith is located below the covering cap of the wheels motors.

IN POSITION I
- The current flows.

IN POSITION O
- The current is cuted off.

16 - Flashing light (option)

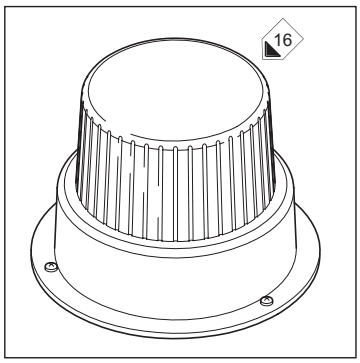

- The flashing alarm lamp turns on automatically when the platform is travelling, or if a movement is carried out (Lifting, rotation,...).

17 - SLOPE SENSOR

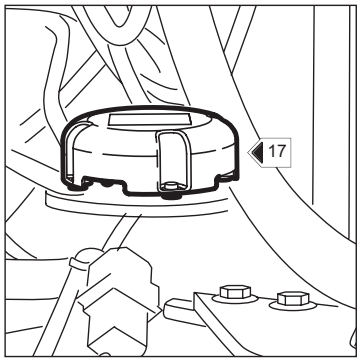

- This sensor control the sope of the access platform. When the access platform is on the max. admissible slope, the alarm sounds (item 33) is activated discontibuously. The led (item 30) in the access platform, comes on.

18 - "STATE OF CHARGE OF THE BATTERY" LAMP

- The lamp changes of colors according to the state of the battery charge:

The red led:
- The charger is on the initial phase of charge.

The yellow led:
- The battery is charged at 80% of charge.

The green led:
- The battery is charged.

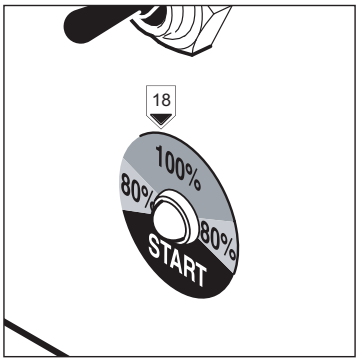

19 - SOUND ALARM HORN

- This sound alarm horn is activated when we press the button 32.

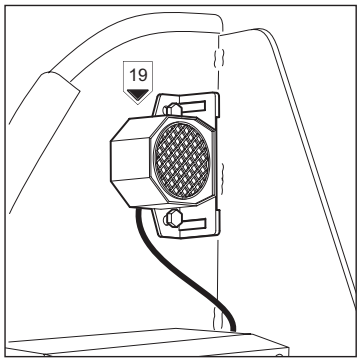

20 - BLOCKAGE OF THE TURRET ROTATION

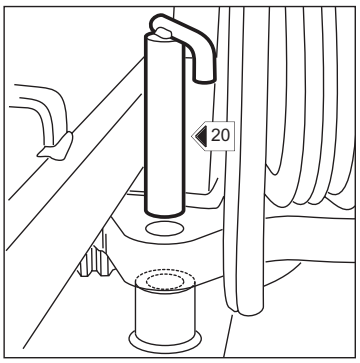

- Put the spindle in the space foreseen for this effect.

- This spindle is used to lock the turret rotation when she is in position.

- She must be used when the access platform is transported by truck or by another transport (train ...).

Do not forget to remove its during the use of the access platform.

CONTROL AND COMMAND INSTUMENTS OF THE PLATFORM

21 - EMERGENCY STOP

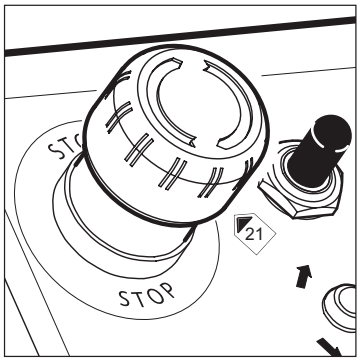

This switch is used to stop all the movements of the machine, in the event of a fault or of a danger.

- Press the button to stop all the movements.
- Turn the button a quater turn to the right to de-activate it. (the switch returns automatically to its original position).

This command takes priority in all circumstances.

22 - 23 - 24 - 25 - 26 - 27 - 28 - CONTACTOR OF SELECTION OF MOVEMENTS AND CONTROL SWITCH

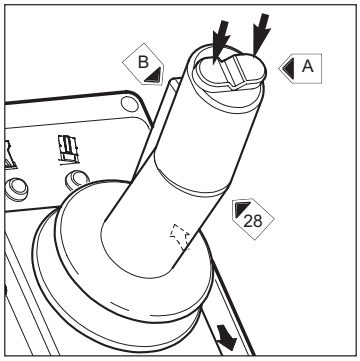

***NOTE** : This control switch is progressive control, and gives a very high approach accurancy. Its use should be smooth and free of jerkes.*

SAFETY TRIGGER
- This trigger (item B) of control control switch 28 must be continually pushed in to perform movements from the operating of the access platform.

PLATFORM INCLINATION
- Sélect the movement with a brief press on the button 22, the led comes on for 8 seconds.
- Push (forward) or pull (backward) the switch control 28 to raise or lower.

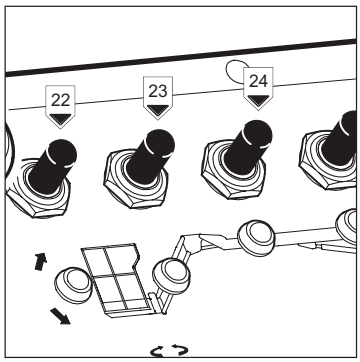

LIFTING / LOWERING OF THE EXTENSION ARM
- Sélect the movement with a brief press on the button 23, the led comes on for 8 seconds.
- Push (forward) or pull (backward) the switch control 28 to raise or lower.

OUTPUTS / INPUTS OF THE TELESCOPE
- Sélect the movement with a brief press on the button 24, the led comes on for 8 seconds.
- Push (forward) or pull (backward) the switch control 28 to go out or go back.

LIFTING / RASING OF THE INFERIOR ARM
- Sélect the movement with a brief press on the button 25, the led comes on for 8 seconds.
- Push (forward) or pull (backward) the switch control 28 to raise or lower.

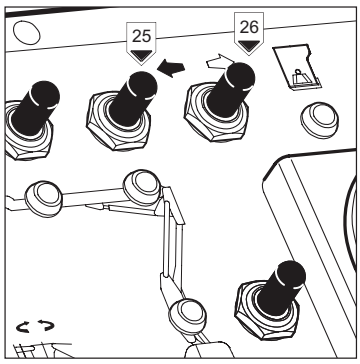

FRONT / REAR TRANSLATION
- Sélect the movement with a brief press on the button 26, the led comes on for 8 seconds.
- Push (forward) or pull (backward) the switch control 28 to advance or retract.

DIRECTION
TO THE RIGHT OR TO THE LEFT

- Select the direction by pressing and holding button A of the control switch 28, to the right or to the left, to move right or left respectively.

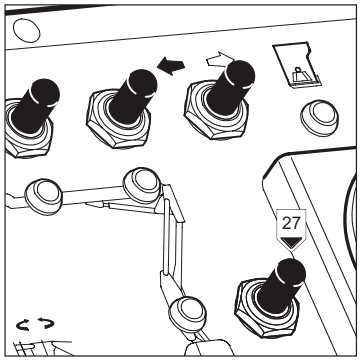

LIFTING / LOWERING OF THE INFERIOR ARM

- Sélect the movement with a brief press on the button 27, the led comes on for 8 seconds.
- Push (forward) or pull (backward) the switch control 28 to raise or lower.

29 - CONTACTOR OF SELECTION OF ROTATION

PLATFORM ROTATION

- Switch the contactor 29 to the left (position **A**).
- Incline to the right or to the left the control switch 28 to orientate on the right or on the left respectively.

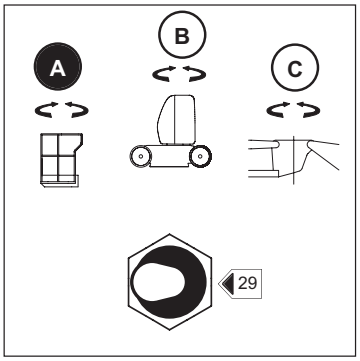

TURRET ROTATION

- Switch the contactor 29 to the vertical (position **B**).
- Incline to the right or to teh left the control switch 28 to orientate on the right or on the left respectively.

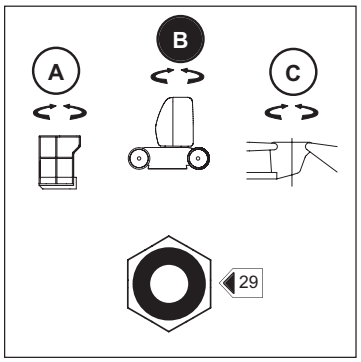

ROTATION OF ROTATED JIB

- Switch the contactor 29 to the right (position **C**).
- Incline to the right or to the left the contactor 28 in order to rotate on the right or on the left respectively.

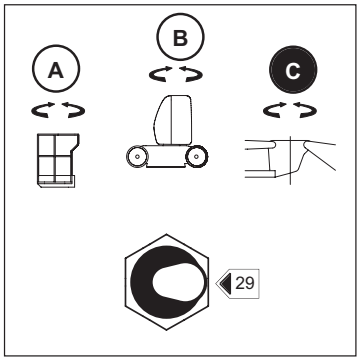

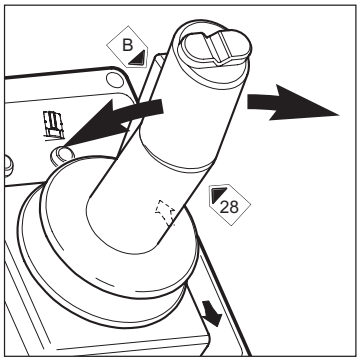

30 - INDICATION LAMP OF THE SLOPE

When the platform reaches the maximum of authorized slope, the led turns on and the arm lifting movements are blocked.

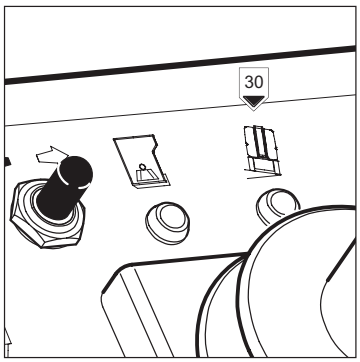

31 - OVERLOAD LAMP AND VARIATOR DEFECTS

- THIS LAMP HAS TWO FUNCTIONS:

1. In case of overload in the platform, this lamp is on.

2. In case of fault, the number of flashes indicates the type of fault detected by the variator **(See: 4 - Lamp“MAINTENANCE MACHINE” p.2-12)**.

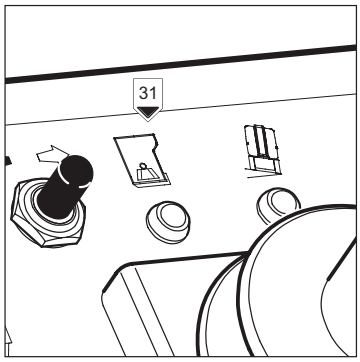

https://truckmanualshub.com/
Torkonjestraat 23
8510 Marke
Belgium
056 / 222 111
info@dumarent.be
www.dumarent.be

32 - Sound alarm horn

- This sound alarm 19 horn located on the turret, is activated when we press on the button 32.

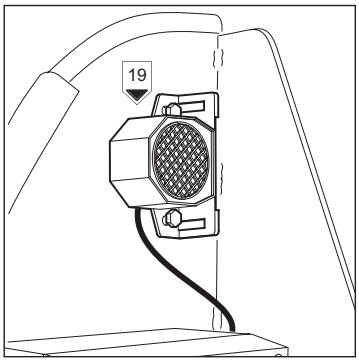

33 - Alarm buzzer

- This alarm buzzer is activated when the machine are in the two followings cases:

  - **Case 1 ; intermittence :** When the authorized slope limit is reached, all the movements are stopped, with the exception of the lowering of the arms and the telescope. It can therefore be returned to an acceptable level of tilt.

  - **Case 2 ; continuous :** When the access platform is in overload, all the movements are stopped, with the exception of the lowering of the telescope and the inferior arms.

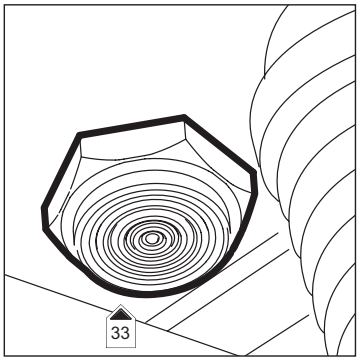

Reminder: see page 2-5

USE OF THE ACCESS PLATFORM

A

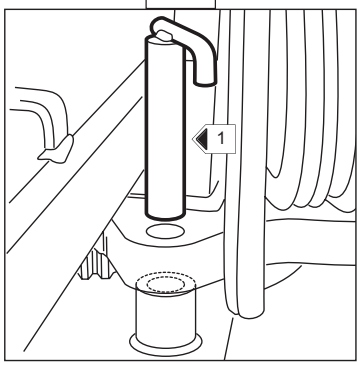

B

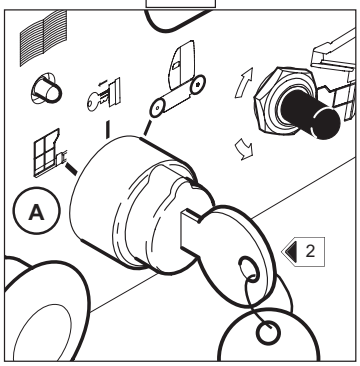

C

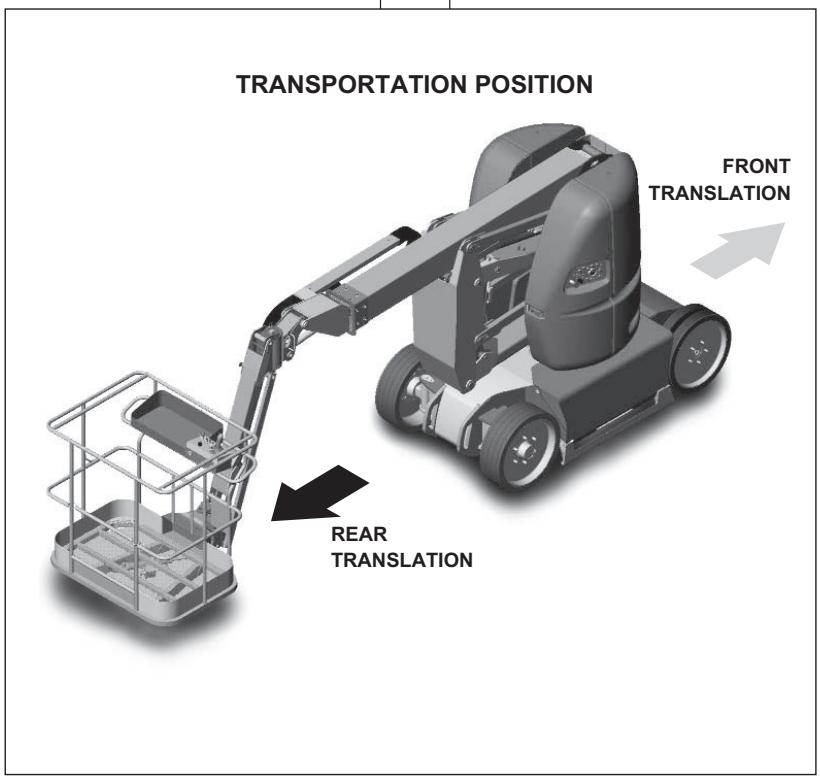

DISPLACEMENT TRANSPORTATION MODE / WORKING MODE

Before the displacement and the use of the machine, remove, if necessary, the blockage of the turret (see Fig. A).

The contactor 2 (Fig. B) should be in the position A (transfer of commands on the desk of the platform).

The access platform has two modes of displacements: the transportation mode (Fig. C) and the working mode (Fig. D).

-Transportation mode: The arms of the access platform are in lower position. This mode is used to translate with max. speed and to move out of the slope of the machine (Fig. C) .

-Working mode: One or many arms of the access platform are lifted or the telescope is gone out. In this mode, the translation are made with a small speed, the safeties for the slope and the overload are activated. (Fig. D).

D

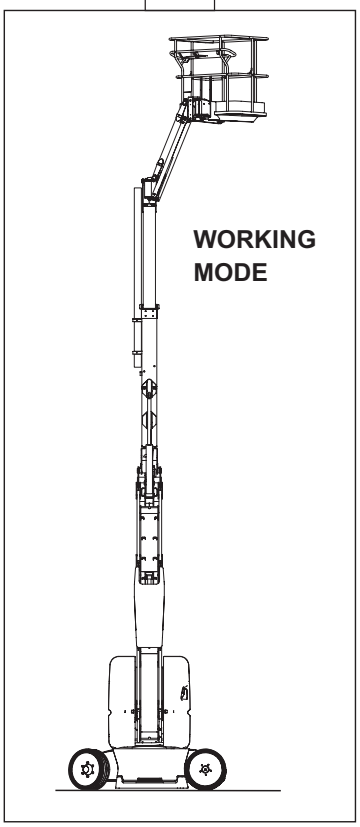

LIMIT TRANSPORTAION MODE / WORKING MODE

Arms rested and telescope lowering.

The extension arm can raise or lower in area of transportation with a lower telescope.

Return of the telescope inferior at 2 cm.

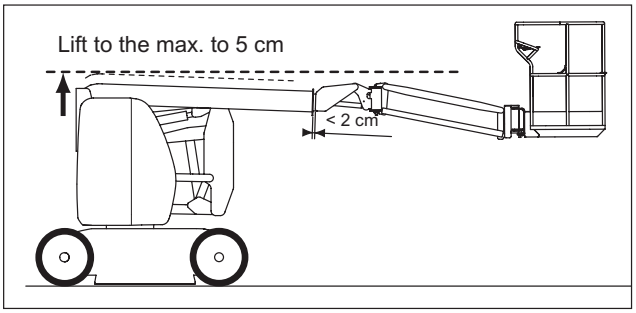

INSTALLATION AND LIFTING

The access platform is designed to work on flat, horizontal ground. It is important to clear enough space for the access platform to work in.

- Move the access platform into its working area.
- If necessary, load the equipment to be carried. store this so that it does not impede the user, and to prevent any falls.
- Climb into the access platform.

You must wear a safety helmet for this operation.

During maneuvres of the access platform (raise, rotate, etc, ...), keep looking above and about you. Watch out in particular for electric cables and any other objects that may be located in the volume in which the access platform moving.

LOWERING

When the work has been completed, lower the telescope and the arm, returning the machine to the transportation position.

Watch out carefully for people on the ground when lowering the access platform

STOPPING OF THE ACCESS PLATFORM

When the access platform is not use, cut off the electrical power supply with a general switch.
At the end of the day, re-charge the battery if necessary (see chapter "MAINTENANCE PERIODICITY").

LOADING AND UNLOADING OF THE ACCESS PLATFORM

Check that the safety instructions associated with the flatbed are being observed before loading the access platform, and make sure that the truck driver is informed about the dimensional characteristics and the weight of the access platform. (see chapter: CHARACTERISTICS).

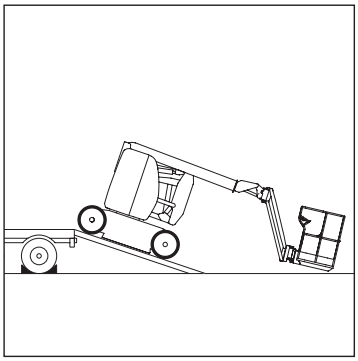

During the loading on a flatbed, the access platform should be in transportation position:
- Superior arm in horizontal position
- Inferior and intermediate arm in lower position
- Telescope gone back

and arrest the turret
- It is possible to lift the extension arm

Make sure that the dimensions and load capacity of the flatbed are adequate for transprorting the access platform. Also check the permissible ground contact pressure of the flatbed in relation to the access platform.

LOADING THE ACCESS PLATFORM

- Chock the wheels of the flatbed item 1 (Fig A).
- Secure the loading ramps to the flatbed so as to make the smallest possible angle for loading the access platform.

NOTE : *The machine is represented with a reduce space required (platform is completely foldep up) (Fig A).*

A

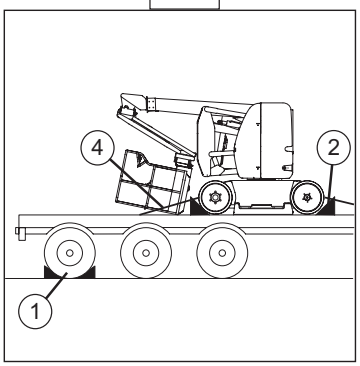

ANCHORING THE ACCESS PLATFORM

- Place wheel chocks on the flatbed in front and behind each tyre of the access platform.Item 2 (Fig A).
- Also place chocks on the inside and outside of each tyre. Item 3 (Fig A).
- Anchor the access platform to the flatbed using ropes of suitable strength. Tie the ropes at the front and the rear, passing them through the lifting eyes on the access platform Item 4 (Fig A) Item 5 (Fig B).

B

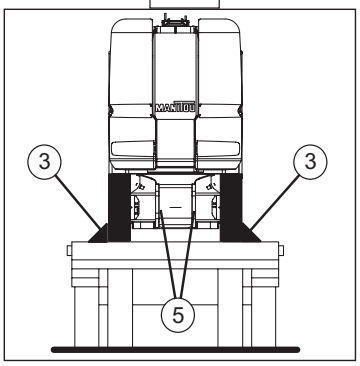

RESCUE PROCEDURE

INDISPOSITION OF THE USER

In the event that the user is taken ill, or is unable to operate the machine, then the person on the ground can take control of the access platform.
Follow the instructions below:
- Hold the key contactor (Fig. A) in position, in order to take control of the access platform movement.
- Lower the access platform.

Pay attention to any structure or obstacle located below the access platform.

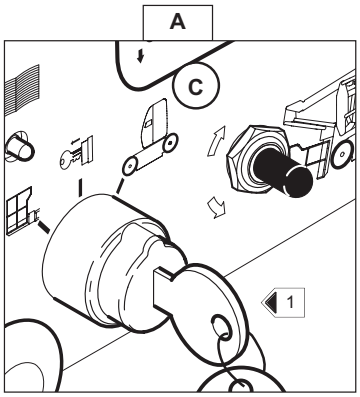

IN THE EVENT OF ACCIDENT OR BREAKDOWN

Whenever an accident or breakdown occurs which renders the electric control units inoperable, the machine still has systems for the manual lowering of the mast and the arm.

- Open the right cowling of the turret.

- For executing one of these movements of the access platform, you must press or pull on the button (see example: Fig. B) of one of the elements of the distributor (diagram D page 2 - 26) and put upon the contactor (Fig. C) to the lower simultaneously.

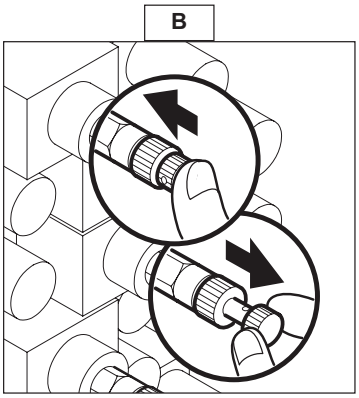

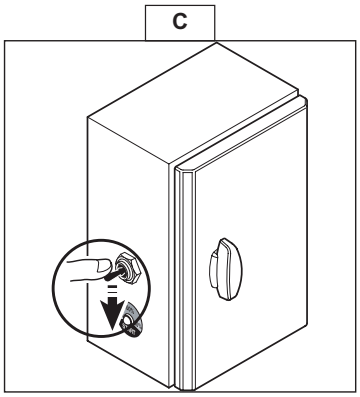

Diagram of the functions of the distributor:

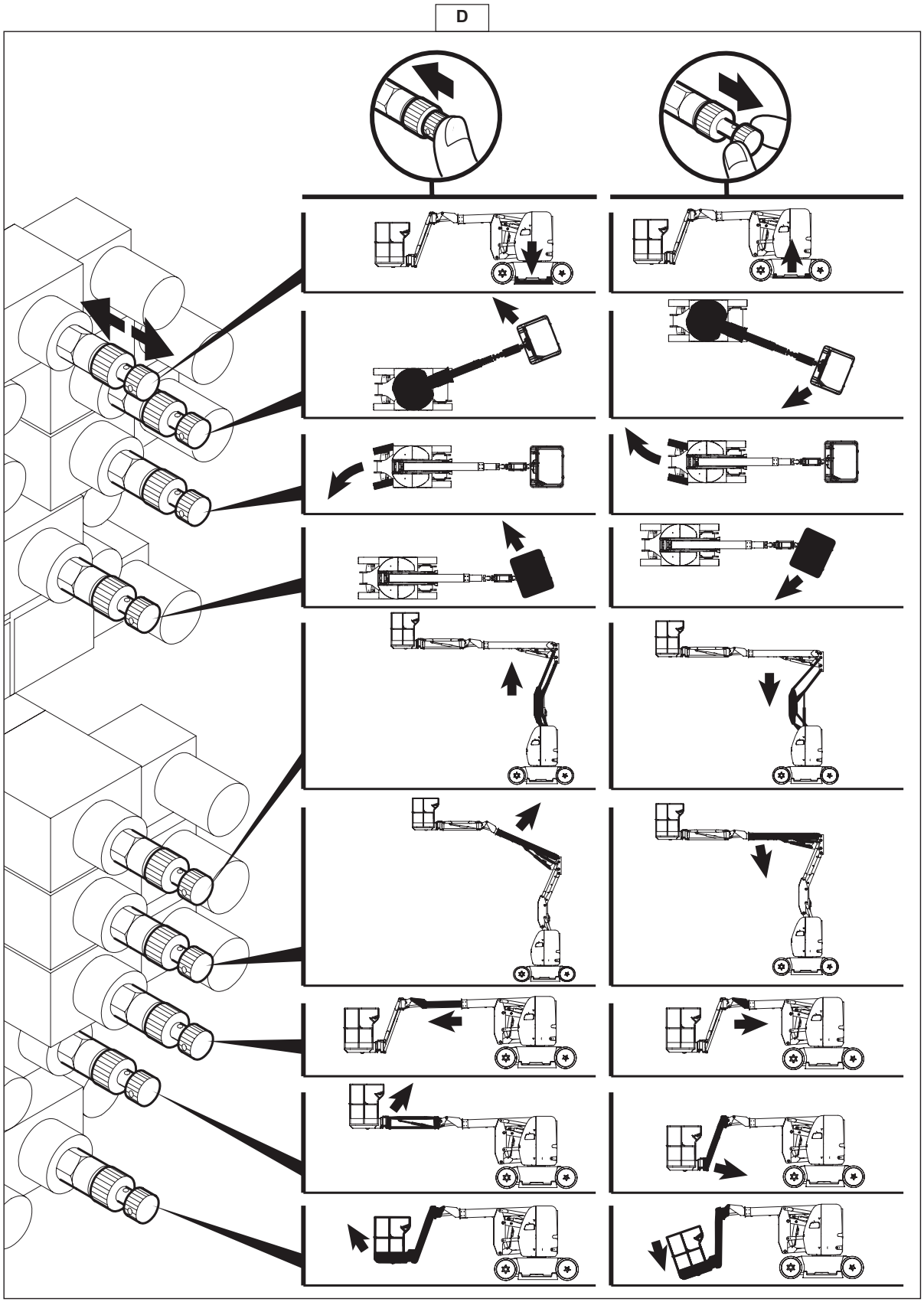

PROCEDURE OF FREE WHEELING

The platform may only be towed a short distance and only by a machine with significant braking performance, in order to hold it: the two machines must be connected by a tow bar.

- To set the platform to free wheel, it must not be subject to any translation stresses from slopes. The wheels must be able to turn freely.
- If possible, raise the platform to free the drive wheels in order to facilitate the operation.
- Loosen bolt 1 (Fig. E) on each wheel 22 mm from the edge, up to the resistance point, without forcing it (20 Nm) : see (Fig. F).
- The machine can be towed as a trailer.

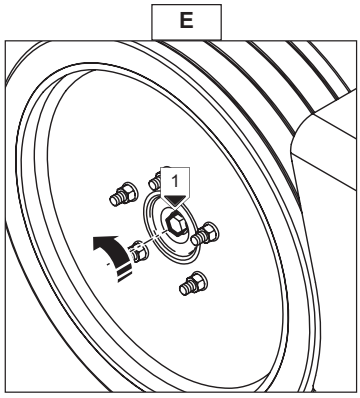

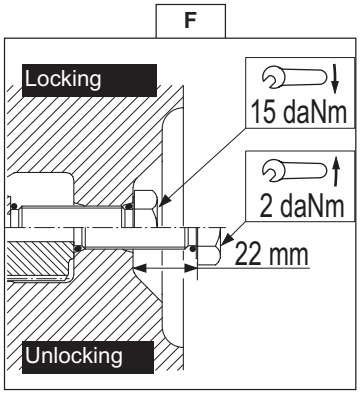

Warning: do not loosen the bolt more than 22 mm, otherwise it may break

RE-INSTALLATION

- Turn the wheel gently from left to right to reset the gear while retightening the screws (1) (Fig. E). Pay attention to the torque when tightening (150 Nm).

https://truckmanualshub.com/
Torkonjestraat 23
8510 Marke
Belgium
056 / 222 111
info@dumarent.be
www.dumarent.be

https://truckmanualshub.com/
Torkonjestraat 23
8510 Marke
Belgium
056 / 222 111
info@dumarent.be
www.dumarent.be

3 - MAINTENANCE

https://truckmanualshub.com/
Torkonjestraat 23
8510 Marke
Belgium
056 / 222 111
info@dumarent.be
www.dumarent.be

Torkonjestraat 23
8510 Marke
Belgium
056 / 222 111
info@dumarent.be
www.dumarent.be

FILTER ELEMENT

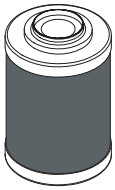

1

DESCRIPTION	REFERENCE	REPLACE
1 - Oil filter cartridge hydraulic intake	599004	100 H

LUBRICANTS

DEVICES TO BE LUBRICATED	CAPACITY	RECOMMENDATION	PACK	REFERENCE
HYDRAULIC OIL TANK	12 Litres	HYDRAULIC MANITOU ISO 46 oil	20 L. 55 L. 209 L.	582 297 546 108 546 109
WHEEL REDUCING (EACH) TURRET GEAR MOTOR REDUCTION BRAKE	0.8 Litres 1.5 Litres	SHELL SPIRAX A80W90	2 L. 20 L 55 L	499 237 546 330 546 221
GENERAL GREASING GREASING OF TURRET CROWN WHEEL BEARING TRACKS		MANITOU grease High Performance	400 g cartridge	479 330
LUBRICATION OF THE TEETH CROWN TURRET		SHELL MALLEUS GL 205 oil	Aerosol	545 834

Torkonjestraat 23
8510 Marke
Belgium
056 / 222 111
info@dumarent.be
www.dumarent.be

MAINTENANCE PERIODICITY

AFTER 50 HOURS OF OPERATION

D1 - Greasing the turret orientation crown 3 - 9
D2 - Check the tightness of the turret orientation crown 3 - 9
D3 - Drain and replace the oil of the reducings of the rear wheels 3 - 10
D6 - Replace the cartridge oil filter hydraulic intake 3 - 11

A - READING OF THE HORAMETER

A1 - Function of the horameter 3 - 5
A2 - Zero reset of the timer 3 - 5

B - EVERY DAY OR EVERY 5 HOURS OF OPERATION

B1 - Check the charge of the battery 3 - 6
B2 - Charge the battery 3 - 6
B3 - Check the hydraulic oil filter 3 - 7
B4 - Check the specific gravity of the battery electrolite 3 - 7
B5 - Check the level of the battery electrolyte 3 - 7

C - EVERY 50 HOURS OF OPERATION

C1 - Grease the axles 3 - 8
C2 - Check the tightness of the wheel nuts 3 - 9

D - EVERY 100 HOURS OF OPERATION

To be carried out once per year.if the access platform has not reached 100 working hours in the year.

D1 - Grease the turret orientation crown 3 - 10
D2 - Check the tight of the screw 3 - 10
D3 - Drain and replace the oil of the reducings of the rear wheels 3 - 11
D4 - Drain and replace the hydraulic oil 3 - 12
D5 - Clean the strainer of the hydraulic circuit 3 - 12
D6 - Replace the cartridge of oil filter hydraulic intake 3 - 12
D7 - Check the tightness of the bolts on the turret's motor. 3 - 13
D8 - Drain the turret's gear motor reduction brake. 3 - 13

E - OCCASIONNAL MAINTENANCE

E1 - Replacement of the batteries 3 - 14

A - READING OF THE HORAMETER

A1 - FUNCTION OF THE HORAMETER

Before any action in the main unit, switch off the power at the battery switch, and get a qualified person.

THE HORAMETER ON THE FRONT OF THE MAIN UINIT

- This counts the number of hours of operation of the machine.

- The dial 1 (Fig. A1/1) indicates the number of hours effected by the access platform.

- There is also a timer which triggers the operation of the orange lamp (Fig. A1/1) every 50 hours.
  It is possible to reset the timer to zero.
  (see the following paragraph)

A1/1

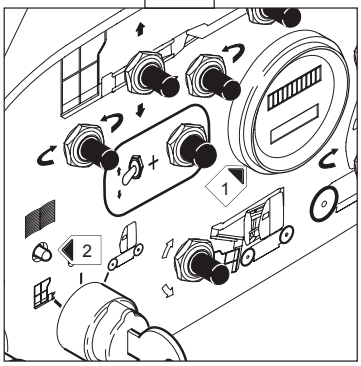

A2/1

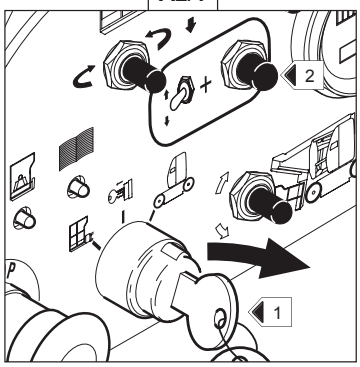

A2 - ZERO RESET OF THE TIMER

This setting is performed after first doing the maintenance operation described in the chapter entitled: “EVERY 50 HOURS OF OPERATION”.

Proceed as follows :
- The lifting platform must be in transport position (arm and telescopic unit fully retracted),
- The platform must not be on a slope,
- Set the selector 1 (Fig. A 2/1) to base control and wait for the initialisation 'Beep".
- Press the "Dead Man's" button 2 (Fig. A2/1) while holding down both contactors 3 (Fig. A2/2) at the same time until the MACHINE MAINTENANCE light 4 (Fig. A2/3) goes out (the timer is reset to zero).

NOTE: *This manipulation should be performed during the 3 to 4 seconds after switching on the electric circuit.*

A2/2

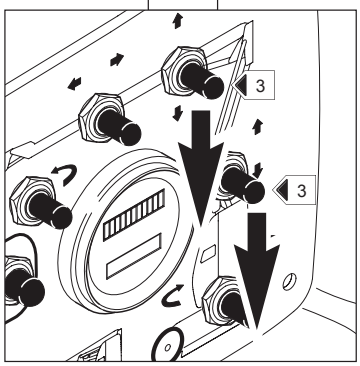

A2/3

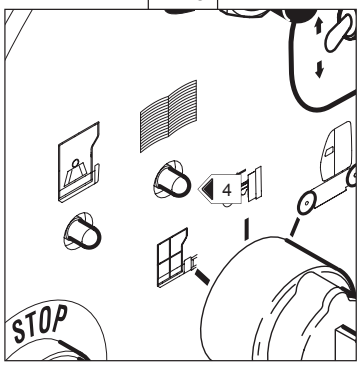

B - EVERY DAY OF EVERY 5 HOURS OF OPERATION

B1 - CHECK THE CHARGE OF THE BATTERIES

The battery life of the access platform, with the battery at full charge, is 5 hours.

When the green lamp 1 (Fig. B1/1) is on, this shows that the battery is fully charged.
- When using the access platform, the lamp operating shows the level of the battery.
- When one of the two orange lamps 2 (Fig. B1/1) is on, this indicates that the battery is 80% discharged, and that is therefore necessary to recharge it.
- When the red lamp 3 (Fig. B1/1) is on, this indicates that there is a risk of damage to the battery.

B1/1

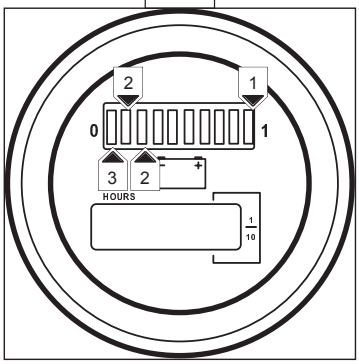

B2 - CHARGE THE BATTERY

- The access platform is fitted with an electric charger, located under the cowling of the wheels motors.

USE THE CHARGER.

Re-charge the battery in a ventilated area, in which it is strictly forbidden to smoke, in order to avoid the risk of explosion.

- Remove the batteries covers 1 (Fig. B2/1) and leave it open all the time while loading.
- Switch off the power to the access platform using the battery switch 2 (Fig. B2/2).
- Do not place any metal objects on the batteries (risk of short circuit).
- Do not remove the cell caps.
- Do not re-charge the batteries if the temperature of the electrolyte is over 40°C. Allow it to cool first.
- Connect the charger power lead to the mains supply 3 (Fig. B2/3).

NOTE : *10 hours of charge are required for a battery which is 70% to 80% discharged.*

When the batteries are charged:
- Disconnect the power lead 3 (Fig. B2/3).
- Close the battery covers 1 (Fig. B2/1).
- Re-connect the power supply of the access platform with a battery switch 2 (Fig. B2/2).

NOTE : *The charger was adjusted in the factory for the cable with which it was supplied. If this cable is replaced, be sure to use the same cable section and the same cable length.*

B2/1

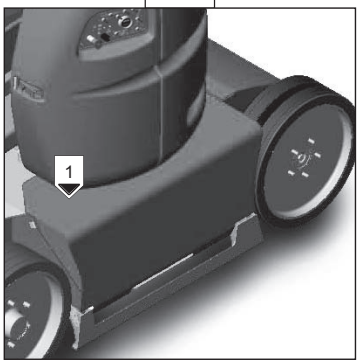

B2/2

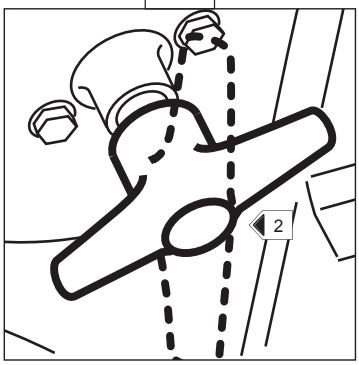

B2/3

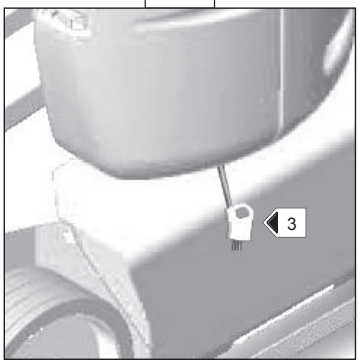

B3 - CHECK THE HYDRAULIC OIL LEVEL

- Open the distribucing cowling.
- The oil level should reach the middle level of the indictor 1 (Fig. B3), bring the access platform to the transportation position.
- If necessary, add oil (see chapter “LUBRICANTS”) via the fill orifice A (Fig. B3).

B3

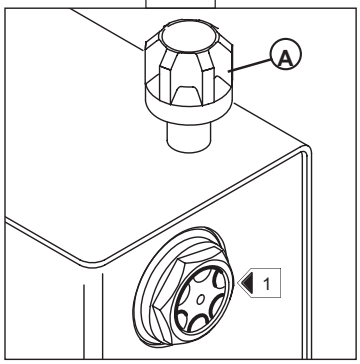

B4 - CHECK THE SPECIFIC GRAVITY OF THE BATTERIES ELECTROLYTE

The specific gravity of the electrolyte with temperature, but a minimum of 1270 to 16° C must be maintained.
In the hatched part of figure (Fig. B4), the batteries are charged normally.
Above this area, the batteries need to be re-charged.
The specific gravity must not vary by 0,025 units from one battery cell any other.

- Check the electrolyte specific gravity in each element of the batteries with a acetometer.
- Never check after filling with distilled water.
- Re-charge the batteries, and wait for 1 hour before checking the specific gravity.

B4

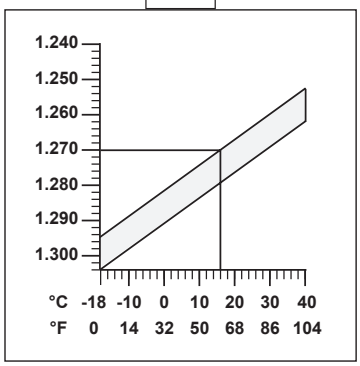

B5 - CHECK THE BATTERIES ELECTROLYTE LEVEL

Check the level of the electrolyte in each cell of the batteries. Where the working ambient temperature is high, check the level more frequently than every 50 hours of operation.

- Open the batteries covers 1 (Fig. B5/1).
- Remove the cap 2 (Fig. B5/2) of each element of the batteries.
- The level should be 1 cm above the top of the plates in the batteries.
- If necessary, top up with clean distilled water, stored in a glass carboy.
- Clean and dry the caps 2 (Fig. B5/2) and replace them.
- Check the battery lugs, and apply Vaseline to them to prevent oxidation.

B5/1

B5/2

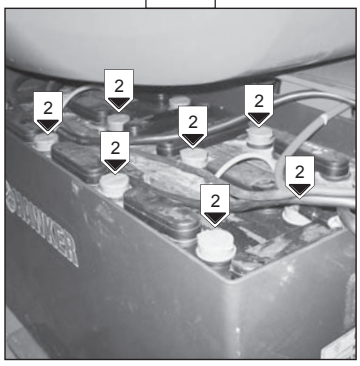

C - EVERY 50 HOURS OF OPERATION

C1 - GREASE THE AXLES

- Clean, then grease the following points with grease, (See chapter: “LUBRICANTS”) and remove the excess.

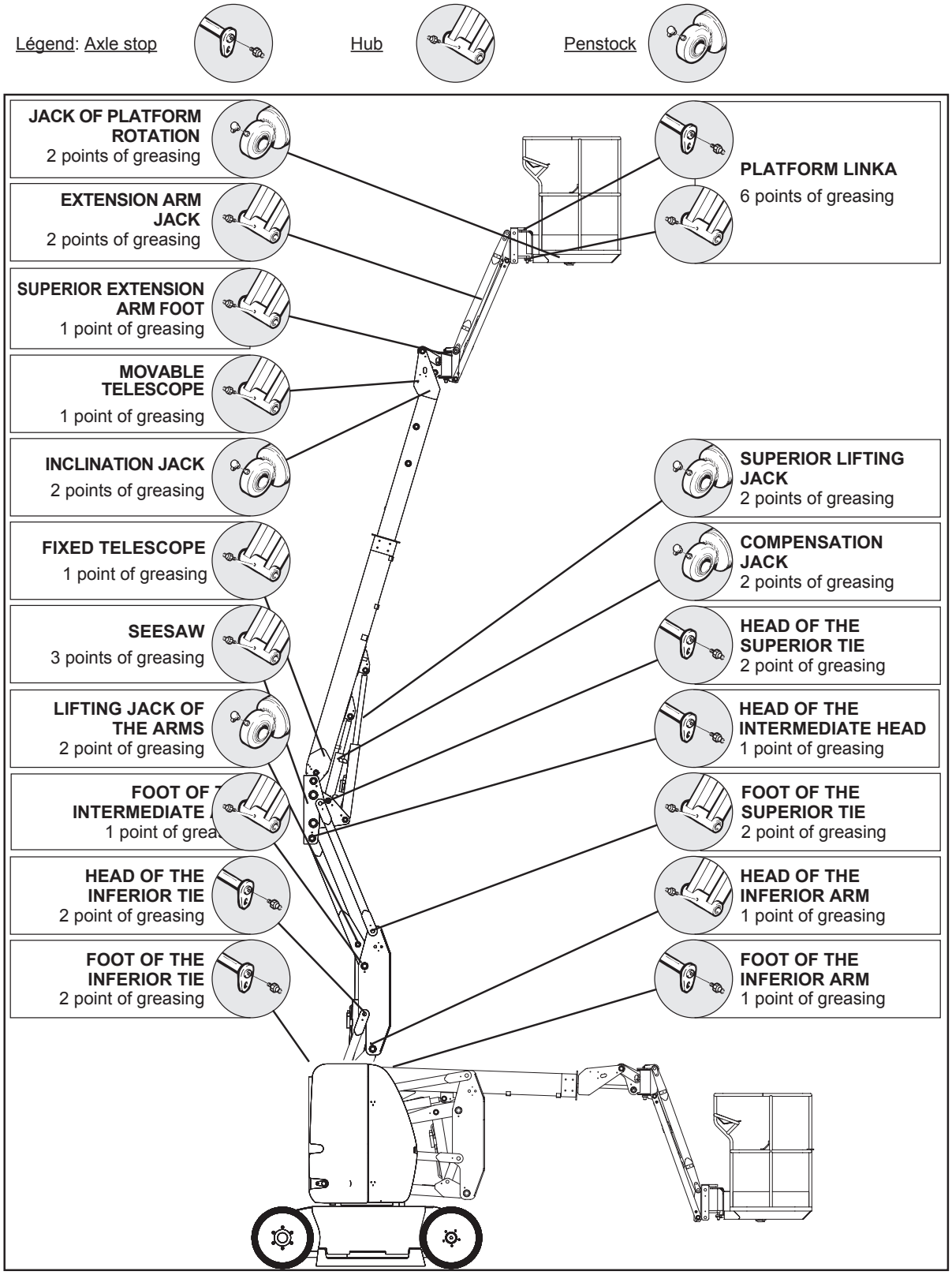

Torkonjestraat 23
8510 Marke
Belgium
056 / 222 111
info@dumarent.be
www.dumarent.be

C2 - CHECK THE WHEEL NUTS ARE TIGHT.

- Check the wheel nuts are tight (Fig. C2).

Not applying this recommendation can lead to the deterioration and breaking of the wheel bolts, as well as the deformation of the wheels.

C2

TIGHTENING TORQUE OF THE WHEEL NUTS	
FRONT WHEELS	34 daN/m ± 15%
REAR WHEELS	22 daN/m ± 10%

D - EVERY 100 HOURS OF OPERATION

D1 - GREASE THE TURRET ROTATION CROWN

- The greasing of the bearing tracks and lubrication of the teeth shoul be carried out every 100 hours of operation, and also before and after a long period of non use.

- Grease to be required: (see chapter: LUBRICANTS)

- Lift the inferior and superior arm in order to facilitate the access.

- Open the turret cowling.

- Reach to the 4 grease points (Fig. D1/1) and grease with abundance the crown by orienting the turret (access to the represented grease points Fig. D1/2).

D1/1

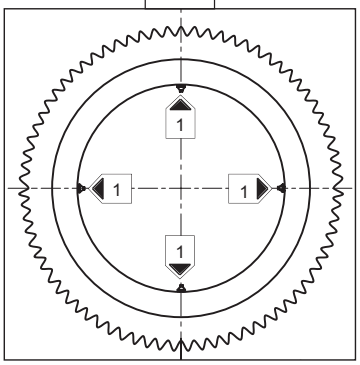

D1/2

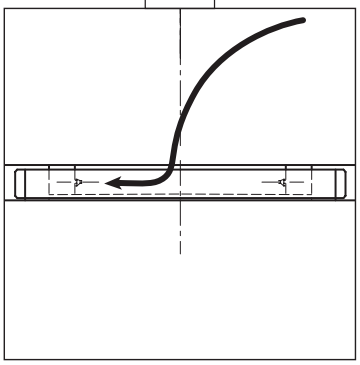

- With a brush, apply the lubricant on the crown wheels 2 and pinion 3 (Fig. D1/3).

- Lubricant to be required: (see chapter : LUBRICANTS)

D1/3

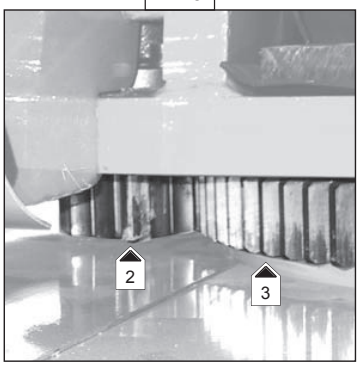

D2 - CHECK THE TIGHTNESS OF THE SCREWS OF THE TURRET ORIENTATION CROWN

- The check of the tightness of the screws shoul be made no later after 50 hours of operation. Then, it would be necessary to repeat this check every 100 hours of operation.

- The theorical tightening torque of the screws is 12 daNm ± 10%.

- 1 daN = 1 Kg.

D3 - DRAIN AND REPLACE THE REDUCINGS OF THE REAR WHEELS

- Place the access platform on an horizontal ground in transportation position and the warm oil of the reducings.

- Remove the rear wheels (Fig. D3/1).
- Place the cap of drainage 1 (Fig. D3/2) lower.
- Place a tray under the cap of drainage and unscrew it.
- Remove the cap 2 (Fig. D3/2) in order to facilitate the drainage.
- Let the oil to drain completely.

Dispose of the waste oil ecologically.

- Put the orifice 1 in the position like in the (Fig. D3/3).
- Fill up with oil (see chapter : LUBRICANTS) by the orifice 2 (Fig. D3/3).
- The level is good when the oil reaches the orifice 1 (Fig. D3/3).
- Replace and screw the caps 1 and 2 (Fig. D3/3).
- Rewind the wheel (see SPECIFICATIONS : wheel nut tightening torque).

D3/1

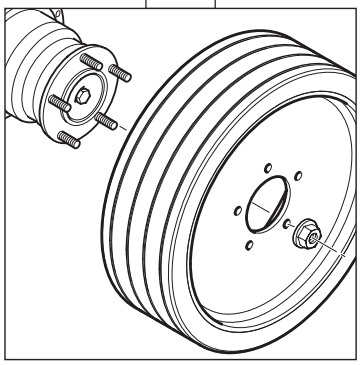

D3/2

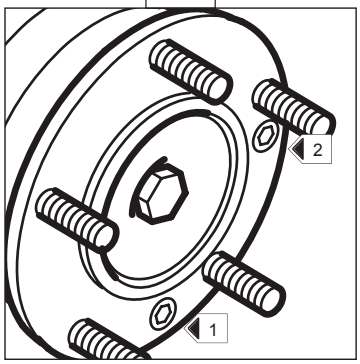

D3/3

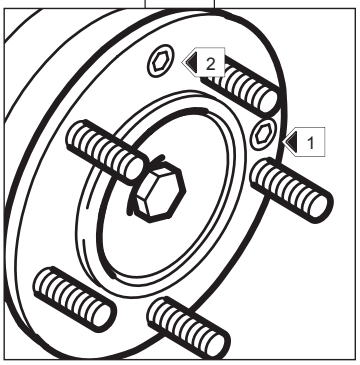

D4 - Drain and replace the hydraulic oil

D5 - Clean the strainer of the hydraulic circuit

D6 - Replace the cartridge of the oil filter hydraulic intake

- Place the access platform on an horizontal ground in transportation position.
- Open the distribucing cowling.

D4/1

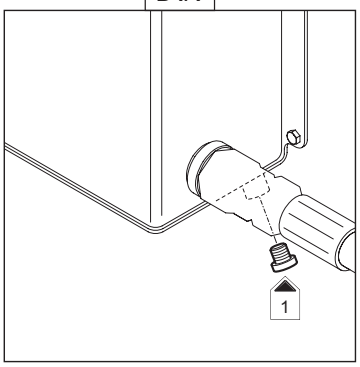

DRAIN OF THE OIL

- Place a tray underneath the drain orifice 1 (Fig. D4/1) and unscrew this.
- Remove the fill cap 3 (Fig. D4/3) in order to facilitate the drainage process.

D4/2

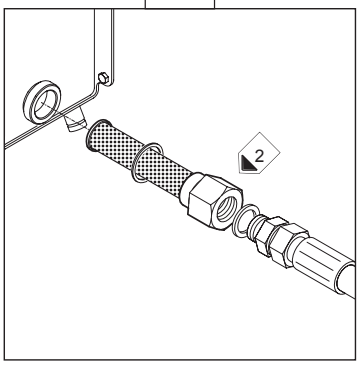

CLEANING THE STRAINER

- Unscrew the strainer 2 (Fig. D4/2) into the tray, clean its with a compresse air.
- Screw the strainer into position.

FILLING WITH OIL

- Replace and screw the drain plug 1 (Fig. D4/1).
- Fill up with hydraulic oil via the fill orifice (see chapter “LUBRICANTS”) by the fill orifice 3 (Fig. D4/3).
- The oil level should reach the middle level of the indicator 4 (Fig.D4/3).

D4/3

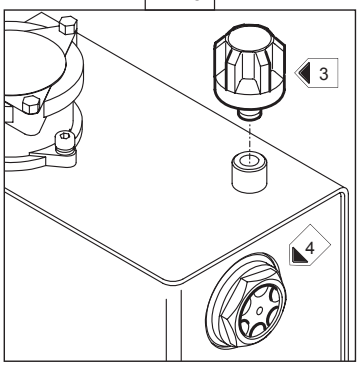

> *Dispose of the waste oil ecologically. Use a very clean funnel and tray and clean the underside of the oil can before filling.*

REPLACEMENT OF THE CARTRIDGE OF THE HYDRAULIC OIL FILTER

- Unscrew the three screws of fixing of the cover 5 (Fig. D4/4).
- Remove the filter cartridge 6 (Fig. D4/4) and replce its by a new one (see chapter “FILTER ELEMENT”).

NOTE : *Attention to the assembling sense.*

- Rechuck the cover 7 (Fig. D4/4) of filter support.

D4/4

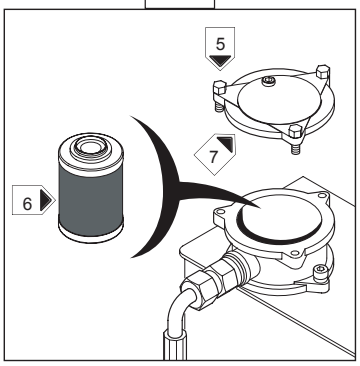

D7 - CHECK THE TIGHTNESS OF THE BOLTS ON THE TURRET'S MOTOR

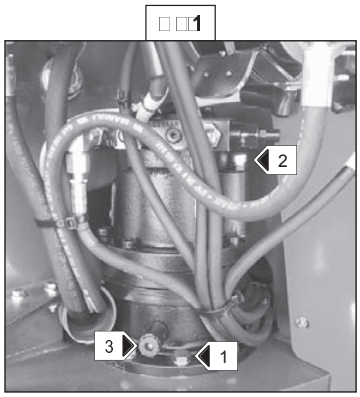

Set the platform on a horizontal surface.

- Check the tightness of the nine bolts 1 (Fig. D7/1).

- The tightening torque for the bolts is 8 daN.m ± 10%.
- 1 daN = 1 Kg

D8 - DRAIN THE TURRET'S GEAR MOTOR REDUCTION BRAKE

Set the platform on a horizontal surface.

- Remove the turret's left cover.

- The gear motor is revealed with the valve block facing to the back.

- Remove the filling-breather cap 2 (Fig. D7/1) to ensure good drainage.

- Mark the drain plug 3 located on the bottom of the reducer unit (Fig. D7/1).

- Place a small receptacle to catch the oil.

- Loosen the drain plug.

Dispose of the oil in an environmentally friendly manner

- Use a syringe to fill the reducer via the filling-breather cap 2 (Fig. D7/1). The oil capacity is 1.3 litres and the level is correct when the breather is full of oil.

- Re-insert the filling-breather cap 2 (Fig. D7/1).

https://truckmanualshub.com/
Torkonjestraat 23
8510 Marke
Belgium
056 / 222 111
info@dumarent.be
www.dumarent.be

E - OCCASIONAL MAINTENANCE

E1 - REPLACEMENT OF THE BATTERIES

When it is necessary to replace the battery, it is important to use the batteries with same capacity and weight to guarantee the stability of the machine.

A battery of pulling is heavy, a mechanical system of lifting must be used.

PRECAUTION : - Maintain the battery in vertical position during the lifting.
- Watch over to remove the slings to avoid the short-circuit.
- Watch over the good positioning of the battery on the access platform.

In the event of the introduction of new batteries, re-charge after 3 to 4 hours of using and that 3 to 5 times.

https://truckmanualshub.com/
Torkonjestraat 23
8510 Marke
Belgium
056 / 222 111
info@dumarent.be
www.dumarent.be

4 - MAINTENANCE HANDBOOK

https://truckmanualshub.com/
Torkonjestraat 23
8510 Marke
Belgium
056 / 222 111
info@dumarent.be
www.dumarent.be

Torkonjestraat 23
8510 Marke
Belgium
056 / 222 111
info@dumarent.be
www.dumarent.be

MAINTENANCE HANDBOOK

- The maintenance handbook is provided by MANITOU's dealer when the machine is put into service.

- It accompanies the machine throughout the guarantee period and subsequently enables regular monitoring of the maintenance conducted on the machine in accordance with MANITOU's recommendations.

- Maintaining the equipment ensures that it is available for use and its profitability.

- The MANITOU dealer can also propose maintenance programmes specially adapted to a variety of needs, ensuring (through his own expertise and the use of MANITOU original replacement parts the equipment's maximum efficiency.

- We recommend that the maintenance handbook be carefully kept throughout the machine operating life and, in particular, that it be handed over to the future owner it the machine is sold.

	DATE	ACTUAL HOURS	ENGINEER'S SIGNATURE
50 HOURS			DEALER'S STAMP
REMARKS:			

	DATE	ACTUAL HOURS	ENGINEER'S SIGNATURE
100 HOURS			DEALER'S STAMP
REMARKS:			

	DATE	ACTUAL HOURS	ENGINEER'S SIGNATURE
150 HOURS			DEALER'S STAMP
REMARKS:			

	DATE	ACTUAL HOURS	ENGINEER'S SIGNATURE
200 HOURS			DEALER'S STAMP
REMARKS:			

https://truckmanualshub.com/
Torkonjestraat 23
8510 Marke
Belgium
056 / 222 111
info@dumarent.be
www.dumarent.be

250 HOURS	DATE	ACTUAL HOURS	ENGINEER'S SIGNATURE
			DEALER'S STAMP
REMARKS:			

300 HOURS	DATE	ACTUAL HOURS	ENGINEER'S SIGNATURE
			DEALER'S STAMP
REMARKS:			

350 HOURS	DATE	ACTUAL HOURS	ENGINEER'S SIGNATURE
			DEALER'S STAMP
REMARKS:			

400 HOURS	DATE	ACTUAL HOURS	ENGINEER'S SIGNATURE
			DEALER'S STAMP
REMARKS:			

450 HOURS	DATE	ACTUAL HOURS	ENGINEER'S SIGNATURE
			DEALER'S STAMP
REMARKS:			

500 HOURS	DATE	ACTUAL HOURS	ENGINEER'S SIGNATURE
			DEALER'S STAMP
REMARKS:			

https://truckmanualshub.com/
Torkonjestraat 23
8510 Marke
Belgium
056 / 222 111
info@dumarent.be
www.dumarent.be

550 HOURS	DATE	ACTUAL HOURS	ENGINEER'S SIGNATURE
			DEALER'S STAMP
REMARKS:			

600 HOURS	DATE	ACTUAL HOURS	ENGINEER'S SIGNATURE
			DEALER'S STAMP
REMARKS:			

650 HOURS	DATE	ACTUAL HOURS	ENGINEER'S SIGNATURE
			DEALER'S STAMP
REMARKS:			

700 HOURS	DATE	ACTUAL HOURS	ENGINEER'S SIGNATURE
			DEALER'S STAMP
REMARKS:			

750 HOURS	DATE	ACTUAL HOURS	ENGINEER'S SIGNATURE
			DEALER'S STAMP
REMARKS:			

800 HOURS	DATE	ACTUAL HOURS	ENGINEER'S SIGNATURE
			DEALER'S STAMP
REMARKS:			

https://truckmanualshub.com/
Torkonjestraat 23
8510 Marke
Belgium
056 / 222 111
info@dumarent.be
www.dumarent.be

850 HOURS	DATE	ACTUAL HOURS	ENGINEER'S SIGNATURE
			DEALER'S STAMP
REMARKS:			

900 HOURS	DATE	ACTUAL HOURS	ENGINEER'S SIGNATURE
			DEALER'S STAMP
REMARKS:			

950 HOURS	DATE	ACTUAL HOURS	ENGINEER'S SIGNATURE
			DEALER'S STAMP
REMARKS:			

1000 HOURS	DATE	ACTUAL HOURS	ENGINEER'S SIGNATURE
			DEALER'S STAMP
REMARKS:			

1050 HOURS	DATE	ACTUAL HOURS	ENGINEER'S SIGNATURE
			DEALER'S STAMP
REMARKS:			

1100 HOURS	DATE	ACTUAL HOURS	ENGINEER'S SIGNATURE
			DEALER'S STAMP
REMARKS:			

https://truckmanualshub.com/
Torkonjestraat 23
8510 Marke
Belgium
056 / 222 111
info@dumarent.be
www.dumarent.be

HOURS	DATE	ACTUAL HOURS	ENGINEER'S SIGNATURE
			DEALER'S STAMP
REMARKS:			

HOURS	DATE	ACTUAL HOURS	ENGINEER'S SIGNATURE
			DEALER'S STAMP
REMARKS:			

HOURS	DATE	ACTUAL HOURS	ENGINEER'S SIGNATURE
			DEALER'S STAMP
REMARKS:			

HOURS	DATE	ACTUAL HOURS	ENGINEER'S SIGNATURE
			DEALER'S STAMP
REMARKS:			

HOURS	DATE	ACTUAL HOURS	ENGINEER'S SIGNATURE
			DEALER'S STAMP
REMARKS:			

HOURS	DATE	ACTUAL HOURS	ENGINEER'S SIGNATURE
			DEALER'S STAMP
REMARKS:			

https://truckmanualshub.com/
Torkonjestraat 23
8510 Marke
Belgium
056 / 222 111
info@dumarent.be
www.dumarent.be

HOURS	DATE	ACTUAL HOURS	ENGINEER'S SIGNATURE
			DEALER'S STAMP
REMARKS:			

HOURS	DATE	ACTUAL HOURS	ENGINEER'S SIGNATURE
			DEALER'S STAMP
REMARKS:			

HOURS	DATE	ACTUAL HOURS	ENGINEER'S SIGNATURE
			DEALER'S STAMP
REMARKS:			

HOURS	DATE	ACTUAL HOURS	ENGINEER'S SIGNATURE
			DEALER'S STAMP
REMARKS:			

HOURS	DATE	ACTUAL HOURS	ENGINEER'S SIGNATURE
			DEALER'S STAMP
REMARKS:			

HOURS	DATE	ACTUAL HOURS	ENGINEER'S SIGNATURE
			DEALER'S STAMP
REMARKS:			

HOURS	DATE	ACTUAL HOURS	ENGINEER'S SIGNATURE
			DEALER'S STAMP
REMARKS:			

HOURS	DATE	ACTUAL HOURS	ENGINEER'S SIGNATURE
			DEALER'S STAMP
REMARKS:			

HOURS	DATE	ACTUAL HOURS	ENGINEER'S SIGNATURE
			DEALER'S STAMP
REMARKS:			

HOURS	DATE	ACTUAL HOURS	ENGINEER'S SIGNATURE
			DEALER'S STAMP
REMARKS:			

HOURS	DATE	ACTUAL HOURS	ENGINEER'S SIGNATURE
			DEALER'S STAMP
REMARKS:			

HOURS	DATE	ACTUAL HOURS	ENGINEER'S SIGNATURE
			DEALER'S STAMP
REMARKS:			

https://truckmanualshub.com/
Torkonjestraat 23
8510 Marke
Belgium
056 / 222 111
info@dumarent.be
www.dumarent.be