https://truckmanualshub.com/

OPERATION MANUAL

25VX3

IHI

SERIAL NUMBER
WQ004001 ~

PUB.2

1112 ENG

https://truckmanualshub.com/

CONTENTS

FOREWORD **0-1**
INTRODUCTION 0-1
MACHINE NUMBER 0-2
MACHINE DIRECTION 0-3

SAFETY **1-1**
SAFETY INFORMATION 1-1
SAFETY PRECAUTIONS 1-2
SAFETY SIGNS AND LABELS 1-14

OPERATION **2-1**
NAMES OF COMPONENTS 2-1
CONTROLS AND INSTRUMENTS 2-2
STARTING ENGINE 2-15
STOPPING ENGINE 2-19
EMERGENCY ACTIONS IF ENGINE STOPS 2-20
RUNNING IN NEW MACHINE 2-21
LEVER OPERATIONS 2-22
BLADE OPERATION 2-27
BOOM SWING OPERATION 2-27
SWING OPERATION 2-28
TRAVELING 2-29
WORK INSTRUCTIONS 2-32
PRECAUTIONS FOR WORKS 2-33
PRECAUTION ON USE OF RUBBER SHOE 2-36
PTO (POWER TAKE-OFF) WHEN USING SPECIAL ATTACHMENT 2-39
TOWING 2-43
TRANSPORT 2-44
LIFTING THE MACHINE 2-46

MAINTENANCE **3-1**
PERIODIC REPLACEMENT OF THE IMPORTANT PARTS 3-1
MAINTENANCE INTERVALS 3-2
RECOMMENDED LUBRICATION TABLE 3-5
LUBRICATE THE GREASE 3-6
MAINTENANCE OF BUCKET 3-9
CRAWLER SHOE 3-12
TRAVEL REDUCTION GEAR 3-15

https://truckmanualshub.com/

HYDRAULIC SYSTEM 3-16
HYDRAULIC SYSTEM DIAGRAM 3-20
ENGINE OIL 3-21
FUEL SYSTEM 3-23
COOLING SYSTEM 3-27
INTAKE AIR SYSTEM 3-31
ENGINE 3-33
ELECTRIC SYSTEM 3-34
ELECTRIC SYSTEM DIAGRAM 3-36
TIGHTEN BOLTS 3-41
HANDLING IN COLD WEATHER 3-44
LONG TERM STORAGE 3-45

SPECIFICATIONS 4-1
SPEED AND GRADEABILITY 4-1
ENGINE 4-1
MASS 4-1
CAPACITY 4-1
BUCKET 4-2
DIMENSIONS 4-3
WORKING RANGE 4-5
WORKING RANGE FOR OFFSET DIGGING 4-6

https://truckmanualshub.com/

INTRODUCTION

This manual contains the safety, operation, maintenance and adjustment procedures of this machine.

Read it and have good understanding before using the machine.

Contact our dealer immediately if you lose or damage this manual.

See the “Operation Manual of the Engine” for the engine.

If you hand over this machine to any third party, this manual should also be handed over to it.

The specifications of the machine may be improved and differ from descriptions of this manual. Please contact our dealer if you have some problems or questions.

https://truckmanualshub.com/

MACHINE NUMBER

The machine No. and engine No. are marked at the positions shown below.

MODEL	25VX3
SERIAL NO.	

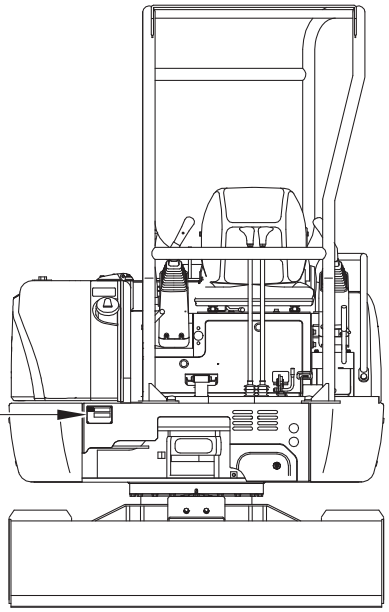

WQ-C000010

MODEL	3TNV76-QIK
ENGINE NO.	

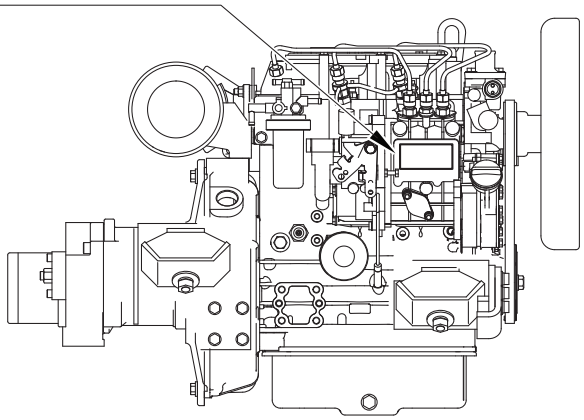

WQ-C000020

https://truckmanualshub.com/

MACHINE DIRECTION

The front, rear, right and left directions of the machine are determined based on the orientation when the operator is seated on the operator's seat with the blade frontward, as shown below.

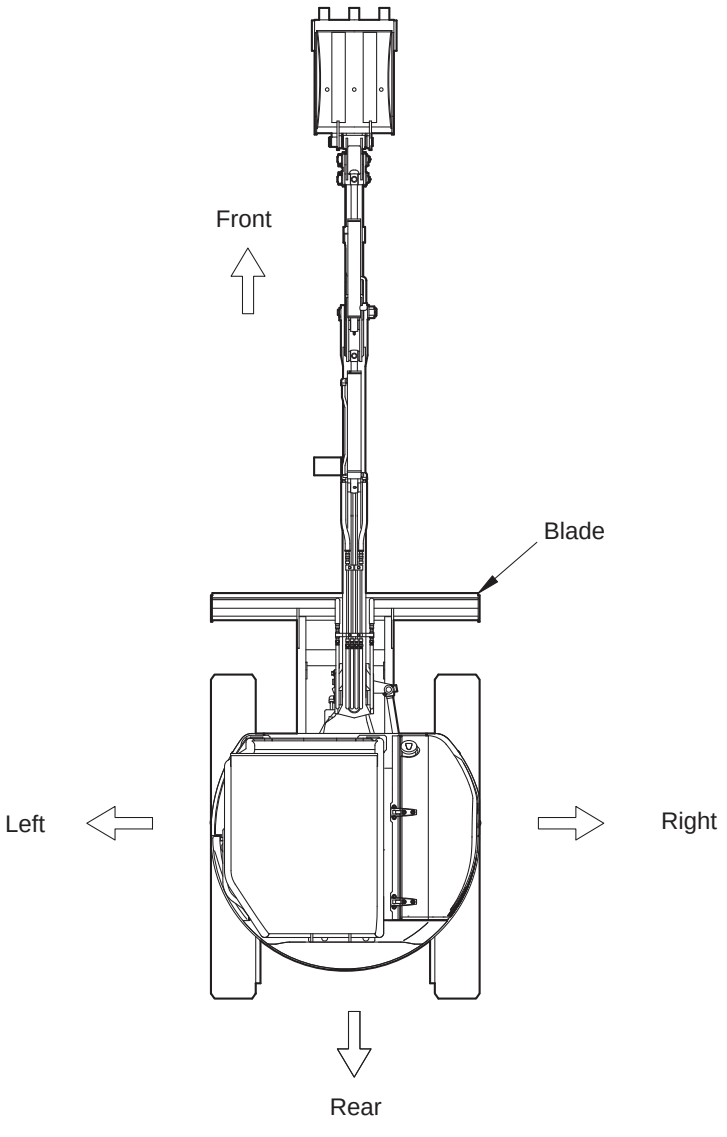

https://truckmanualshub.com/

SAFETY

Most accidents occur during works when preventive measures against danger are neglected or basic safety instructions are not observed.
Such accidents may be avoided by paying careful attention in advance.
This manual describes the basic safety instructions to be observed in daily operation, inspection and maintenance of the machine.
Observe these instructions carefully for safety.
Check the safety with great care for any other matters not described in this manual.

https://truckmanualshub.com/

SAFETY INFORMATION

Read and understand the operation manual, safety signs and labels before using or maintaining this machine.

The safety alert symbol is used to alert you to potential personal injury hazards. Obey all safety messages that follow this symbol to avoid possible injury or death.
The signal words used with the safety alert symbol indicate a specific level of severity of the potential hazard. All are used as attention-getting devices throughout this manual as well as on labels fixed to the machine to assist in potential hazard recognition and prevention.

⚠ DANGER	This safety alert symbol and signal word indicates an imminently hazardous situation which, if not avoided, will result in death or serious injury.
⚠ WARNING	This safety alert symbol and signal word indicates a potentially hazardous situation which, if not avoided, could result in death or serious injury.
⚠ CAUTION	This safety alert symbol and signal word indicates a potentially hazardous situation which, if not avoided, could result in minor or moderate injury or serious damages of the machine.
NOTICE	This signal word indicates a potentially hazardous situation which, if not avoided, could result in damages of the machine or reduction of the service life.

We have made every effort for you to prevent accidents during operation; however, we cannot be held responsible for predicting every kind of danger in all operating conditions.
It is the owner or user of the machine who is responsible for always paying attention to operate the machine, as well as reading and understanding this manual enough to obtain the essential knowledge and skills fundamental to correct machine operation.

https://truckmanualshub.com/

SAFETY PRECAUTIONS

PRECAUTIONS BEFORE OPERATION

Read and understand the safety signs and labels

- There are several specific safety signs on your machine.
  Please read and understand the safety signs and labels.
- You must replace a label if it is damaged, missing or cannot be read.

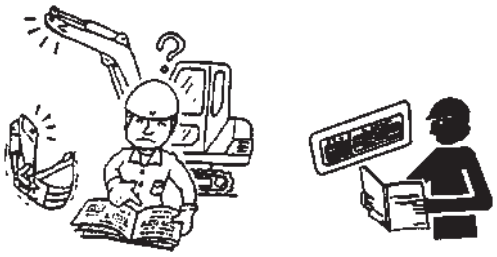

WC-C100010

Make a work plan

Start the work only after discussing with the person in charge at the site.

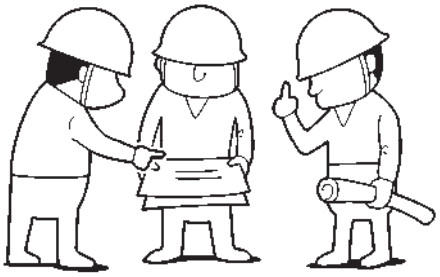

CQ0-01880

Wear proper working clothes

For the sake of safety during working, wear clothes that match your body.

Always wear required protective items such as protective cap, protective goggles, reflective clothing, safety shoes, and ear protection as required.

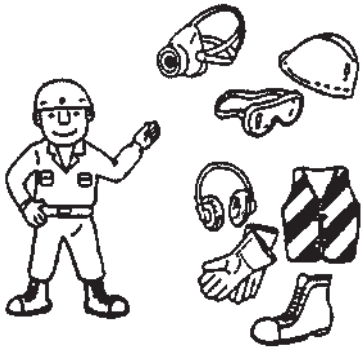

CA-C100030

Watch for underground utilities

Mark the location of underground utilities such as gas lines, sewers, and power lines before any digging operations. If necessary, the utilities should be temporarily discontinued.

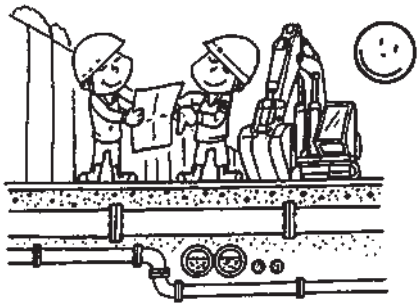

WC-C100620

https://truckmanualshub.com/

Perform "walk-around" inspection

Be sure to walk around the machine and inspect it before starting work. If some defects are found, repair them without fail.

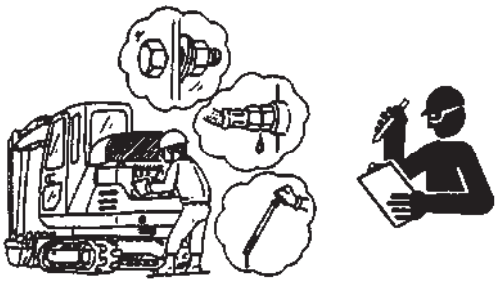

WC-C100030

Prevent a fire

- Do not leave oiled waste cloth, dead leaves, paper trash or other flammable objects around the engine. Such matters may cause a fire. Always inspect and remove such matters.
- Stop the engine and do not bring fire close to it while refilling fuel.
- Check if fuel, oil or hydraulic oil does not leak. If some defects are found, repair them and wipe off leaked oil.
- Check the installation position and usage of the fire extinguisher.

CA-C100380

Install the ROPS canopy

We recommend that the ROPS canopy should be installed to avoid accidents, which may result in injury, if a machine with a canopy should fall down.

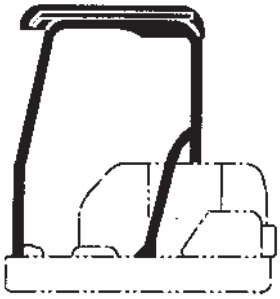

WC-C100060

Carefully mount and dismount the machine

Always use steps and handholds to mount and dismount the machine.

Hold the handholds with both hands and face the machine keeping a contact with at least three points of the steps and handrails.

Never hold control levers at mounting and dismounting.

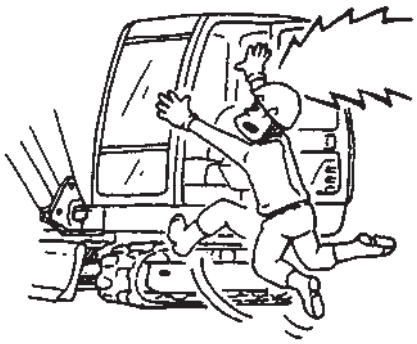

WC-C100070

Start the engine in the operator's seat

If the engine is started from a position other than sitting in the operator's seat, there is the danger that the machine starts moving suddenly.

Start the engine only after carrying out checks while sitting in the operator's seat.

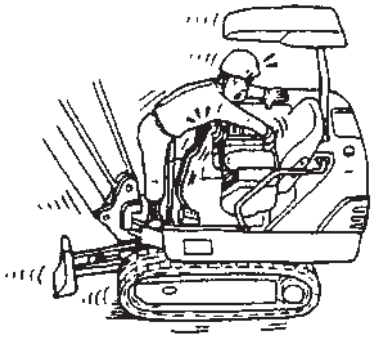

WC-C100080

https://truckmanualshub.com/

PRECAUTIONS DURING OPERATION

Stay seated while operating

Never attempt to operate the excavator from any position except the operator's seat. If you operate the machine from any other position, such as standing by the window or door, you may operate the machine inaccurately, which can cause serious injury. Remember that you should not get on or off the moving machine to be seated or to leave the machine.

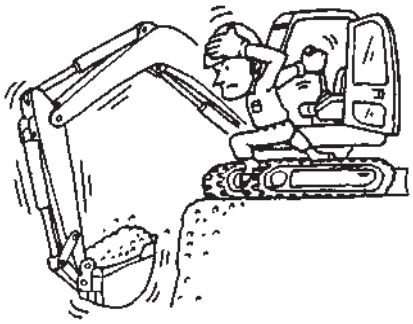

WC-C100100

Fasten the seat belt

If the machine falls down, you may be thrown out of the operator's seat or pressed under the machine. Such an accident may result in serious injury or death.
Sit on the operator's seat and fasten the seat belt all the time while operating the machine.

WC-C100630

Clear all personnel from the machine and area

Be sure to barricade the job site to prevent entry of the unauthorized. Confirm that there is no one around the machine before starting the engine or operating the machine.

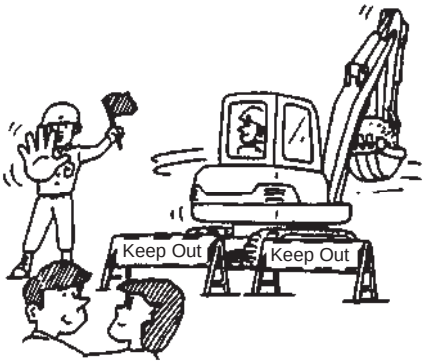

WC-C100110

Prevent accidents while moving

Always sound the horn to signal others nearby that you are moving the machine. Check that no one is within the working area of the machine before attempting to move it.

WC-C100120

https://truckmanualshub.com/

Never swing over personnel

Be sure that no personnel are working around the machine before swinging.

Pay attention to invisible workers in a trench or pit in particular. Follow the signal person's direction not to swing over such workers.

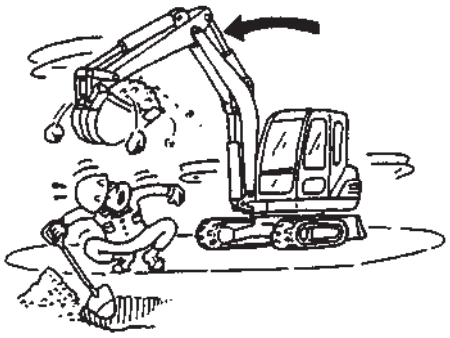

WC-C100130

Never leave load suspended in the air

Never leave the load suspended in mid air, when the machine is out of service, or you have to leave the machine. Always put down the bucket of load onto the ground. Should a malfunction occur, it could fall, striking equipment or personnel.

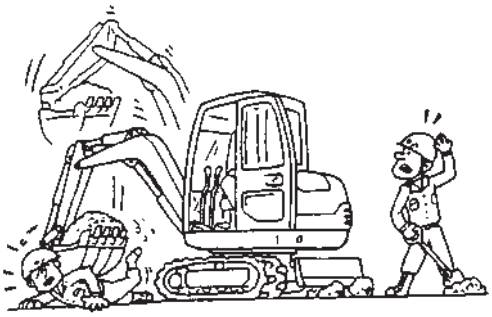

WC-C100140

Do not swing above the truck cab

If you swing the bucket above the truck cab, the driver may be injured by dropped soil and sand or the bucket contacting the truck cab.

Do not swing the bucket above the truck cab when loading soil and sand.

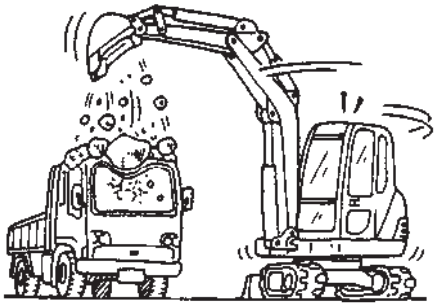

WC-C100150

Provide adequate tailswing clearance

Confirm that there is a sufficient clearance around the machine for swinging operation.

The operator tends to be unconscious of the area behind the machine. Before tailswing, make sure that there are no personnel or objects in such area.

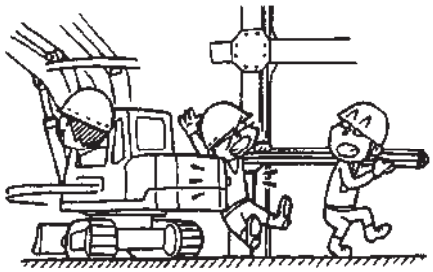

WC-C100160

Always observe the bucket and load

Always watch the moving bucket or load carefully.

Moving bucket or load without care may cause injury to personnel or materials.

If you have to look away from it, stop the machine.

WC-C100170

https://truckmanualshub.com/

Never allow unauthorized personnel to ride on the machine

Only operator is authorized to be on the machine during operation. Never let unauthorized personnel ride on the machine. Any person riding as a passenger can fall off and suffer injury.

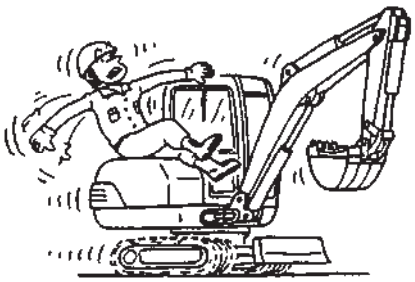

WC-C100180

Danger for electric power line

If the machine should contact with an electric power line, move the machine apart from the cable.

If it is impossible to move the machine, shout “Never touch the shovel” to give a warning to the workers around the machine.

Do not put on the step when you get off the shovel. Jump down onto the ground.

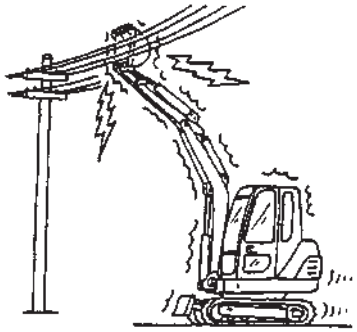

WC-C100200

Maintain good ventilation

Diesel engine exhaust contains products of combustion which may be harmful to your health. Always start and operate the engine in a well ventilated area. If in an enclosed area, vent the exhaust to the outside.

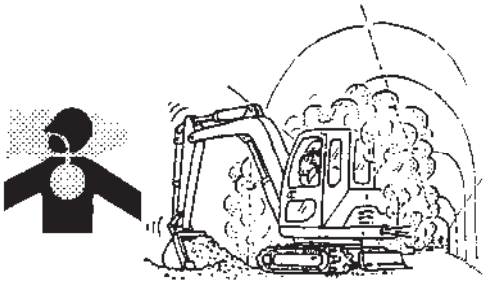

WC-C100210

Do not dig near the machine

Do not dig the ground deep near the machine to prevent falling due to collapse of the ground.

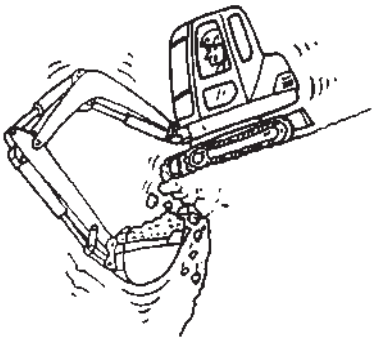

WC-C100240

Do not dig at the base of a cliff

If you dig at the base of a cliff, it may collapse or stones may drop, causing a danger. Do not dig a cliff.

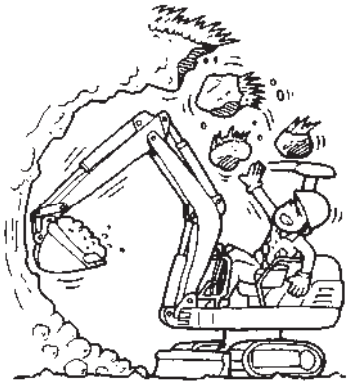

WC-C100250

https://truckmanualshub.com/

Never exceed the machine performance

If you use a large bucket that exceeds the machine performance, the machine may be broken or injury or death may result.

Be sure to use a bucket or attachment that meets the specifications.

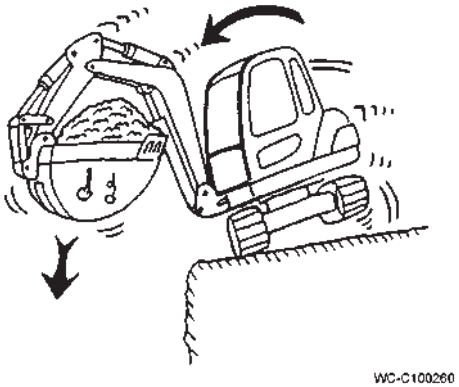

Never lean out of the window

Do not lean out of the window, enter between the attachment and cylinder or put your hand or arm between them.

If the attachment moves, you may be caught by the attachment, resulting in serious injury or death.

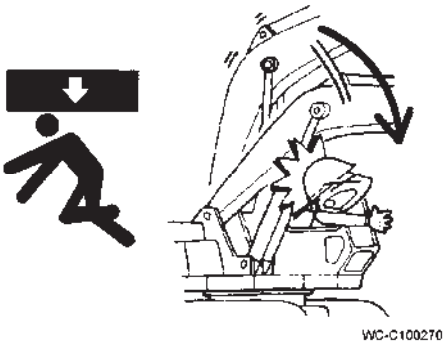

https://truckmanualshub.com/

PRECAUTIONS FOR TRAVELING

Check the direction

If forward movement and backward movement are mistaken in operation with the travel lever, serious accidents may result.
Check the blade position before traveling. If the blade is behind the machine, operations of the travel levers are reversed.

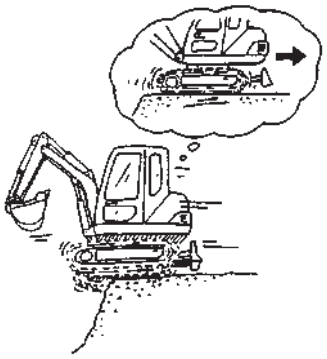

WC-C100340

Travel up and down the slope

Traveling sideways or parallel to a slope while on it may cause the machine to slide and fall over.
To prevent such accidents, only travel up and down the slope at a right angle.

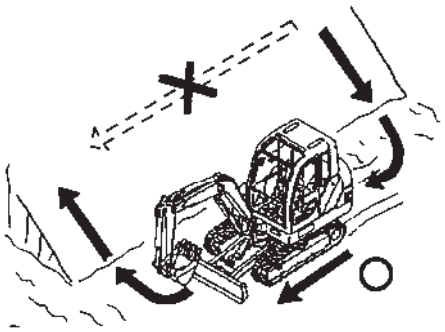

WC-C100350

Do not steer on the slope

Avoid changing the direction on a slope, which could result in tipping or side slipping of the machine.
When it is inevitable to change the direction, carry it out in a hard ground where the slope is gradual.

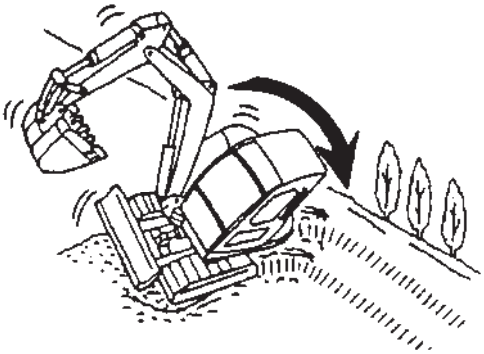

WC-C100370

Travel on the slope

- Keep the bucket at as low position as 20 to 30 cm from the ground and travel the machine at low speed when traveling on a slope.
- Lower the bucket onto the ground and stop traveling if the machine becomes unstable.

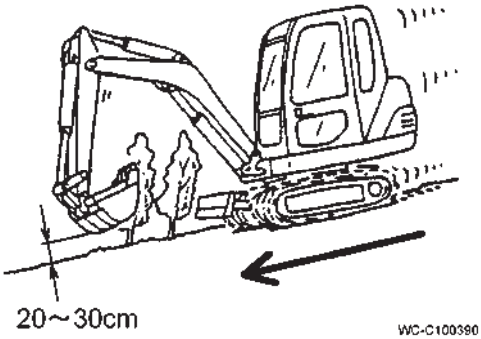

WC-C100390

https://truckmanualshub.com/

PRECAUTIONS FOR TRANSPORTING

Load and unload the machine

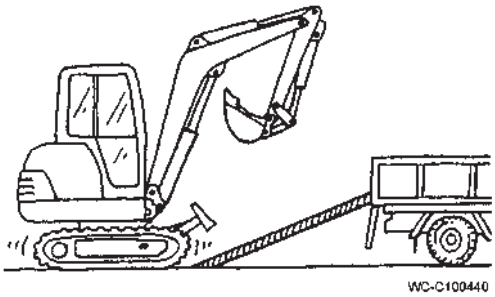

- Always load and unload the machine on the level ground.
- Use a ramp board that has sufficient strength, width, length, and thickness.
- Remove ice, snow, or slippery material from the ramp board and truck deck before loading.
- Never swing the machine on a ramp board. Otherwise, it may fall down.

Never load or unload the machine without ramp board

Never load or unload the machine by jacking up the attachment. Otherwise, the machine may fall down.

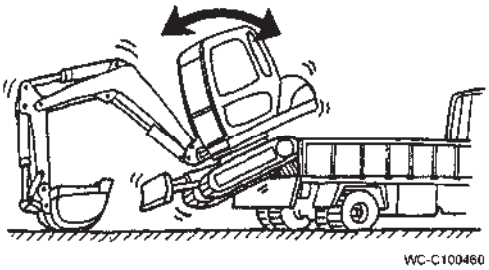

Precautions at transportation

Apply stoppers in front of and behind the crawlers.
Apply wire ropes to the machine body and attachment and fix them firmly to the load carrying platform.

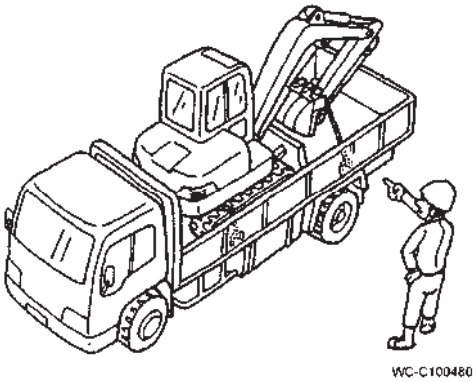

https://truckmanualshub.com/

PRECAUTIONS FOR MAINTENANCE

Keep routine maintenance

You must read and understand the warnings and instructions contained in this manual, before performing any operation or maintenance procedures.

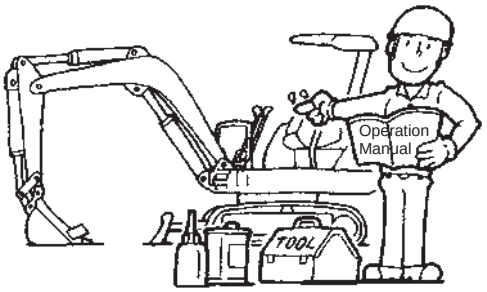

WC-C100450

Wear protective tools

In grinding or when detaching the pin or tooth, fragments may be put in eyes, resulting in injury.
Wear protective goggles and protective cap before starting work.

WC-C100590

Put the "maintenance signboard"

Put the “Maintenance signboard” on an easy-to-see position of the operation lever in order to prevent any other person from touching the machine carelessly.

WC-C100490

Never perform maintenance of the moving machine

Lower the bucket onto the ground and stop the engine to prevent an accident of being crushed or caught by the machine.
Keep in good contact with the operator if it is necessary to perform maintenance of the moving machine.

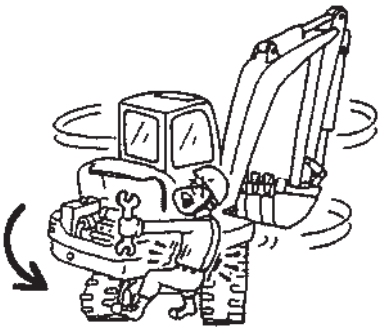

WC-C100500

https://truckmanualshub.com/

When working under tracks

If the machine is merely jacked up with the attachment, you may be caught by the machine when it lowers.
Place the supporting blocks under the crawler and make sure that it is supported firmly.

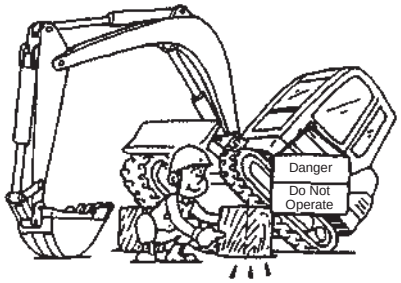

WC-C100520

Hold the attachment

If the hydraulic hose is disconnected or the pin is drawn out in the condition where the attachment is raised in the air, oil may spout out or the attachment may drop.
Be sure to lower the attachment onto the ground or keep it with safety supports, blocks, etc.

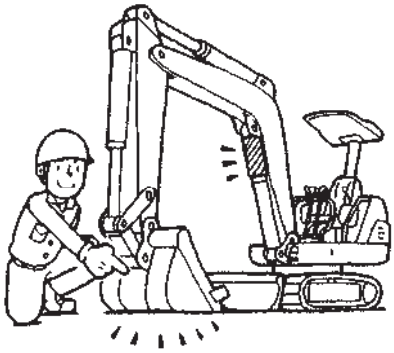

WC-C100540

Never watch the check valve when adjusting crawler shoes

Never watch the check valve when servicing the crawler shoes. Position yourself not to be splashed with grease.
Grease used to adjust the crawler shoes is highly pressurized and can cause serious injury or death.
Carefully read and understand the maintenance procedure for shoe adjustment.

WC-C100580

Never perform maintenance with engine running

Touching rotating parts such as the fan belt, etc., can get your hand crushed and there is the danger of your hand being cut off.
Always perform maintenance with the engine shut off.

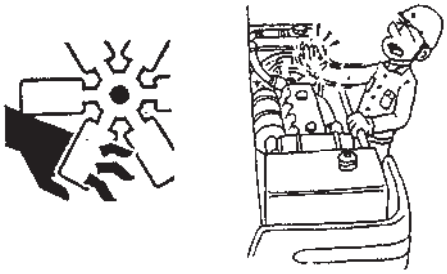

WC-C100510

Be careful with hot engine

Never touch the engine or muffler right after the machine is stopped. It is very hot and causes burns.

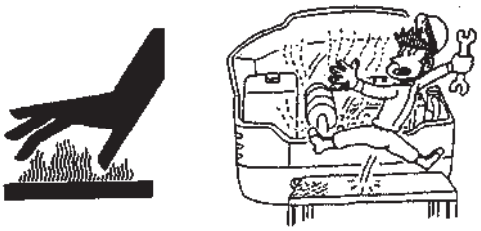

WC-C100530

https://truckmanualshub.com/

Never open a radiator cap when it is hot

Never try to open the radiator cap while the engine is running or right after the engine is stopped. If the cap is open the very hot steam will blow out, which causes serious burns.

Wait until the coolant temperature goes down.

Slowly open the cap to release the pressure.

WC-C100550

Always release inner pressure from hydraulic system

Pressurized oil may spout out if the hydraulic line is disconnected without releasing the inner pressure of the hydraulic system. Release the inner pressure before disconnecting a hydraulic line.

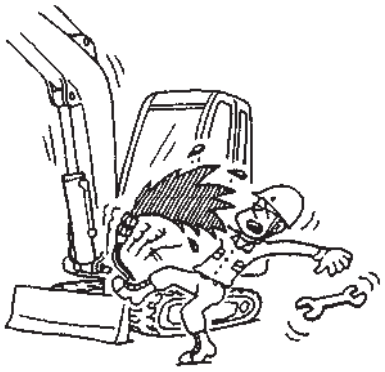

WC-C100560

Precautions for high pressure oil

It is very dangerous if the high pressure oil enters your skin or eyes.

If oil enters your skin, immediately go to the doctor and get medical attention.

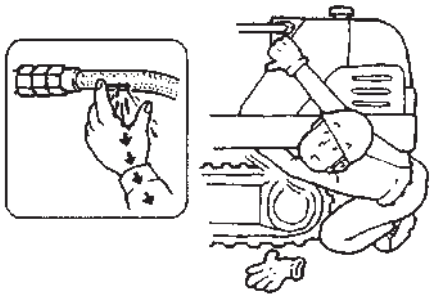

WC-C100570

Precautions for battery

When maintaining the electrical system or carrying out welding, remove the lead connected to the negative terminal (-) of the battery.

The battery can generate flammable gases and there is the danger of the gases catching fire and exploding. Also, dilute sulfuric acid is used for the battery liquid. Take sufficient care while handling.

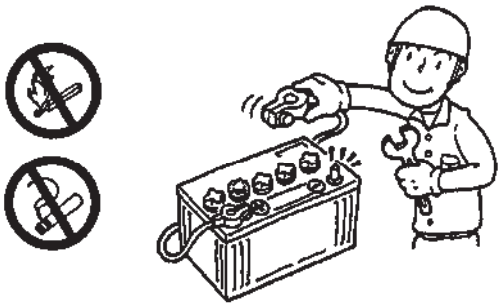

CA-C100370

Prevent fire or explosions

Keep away fuel, lubricant and coolant from any fire or heat. Most of them are very flammable.

Never place flammable materials or objects close to fire or heat.

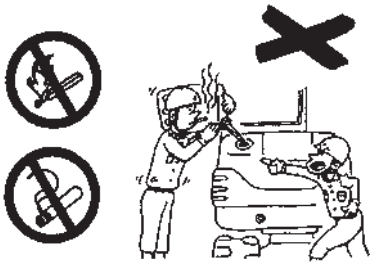

WC-C300020

https://truckmanualshub.com/

SAFETY SIGNS AND LABELS

There are several specific safety signs ⚠ on your machine.
Make sure that you can read all safety signs. Clean or replace these if you cannot read the words.

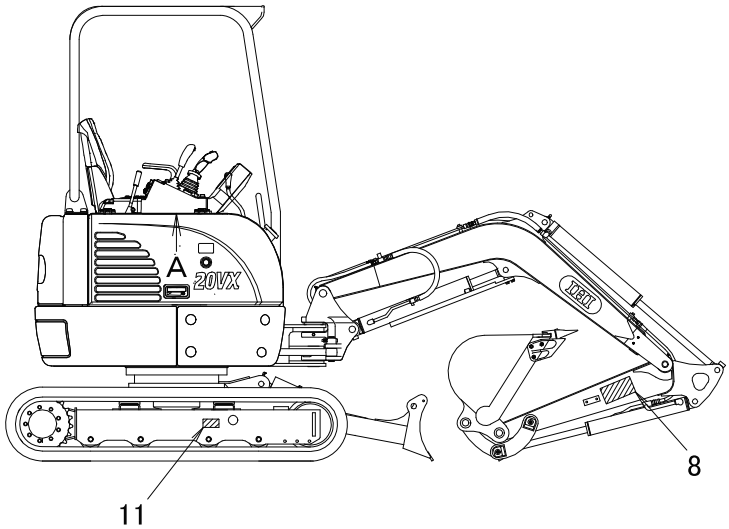

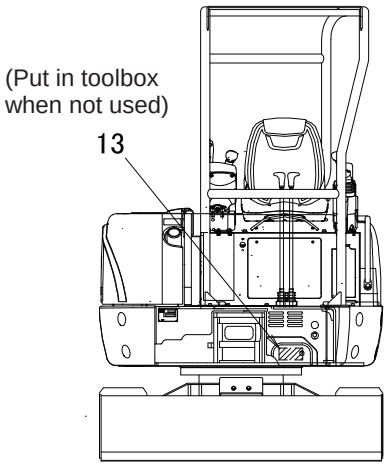

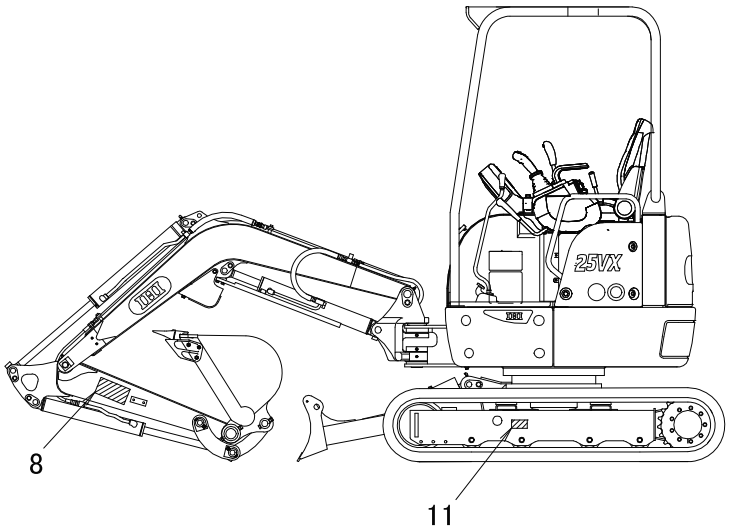

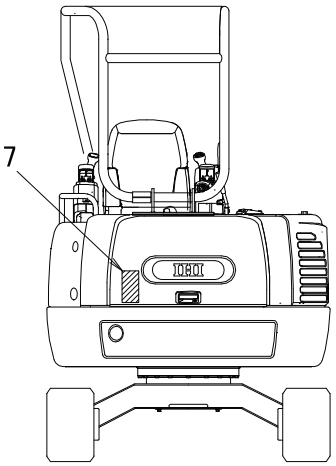

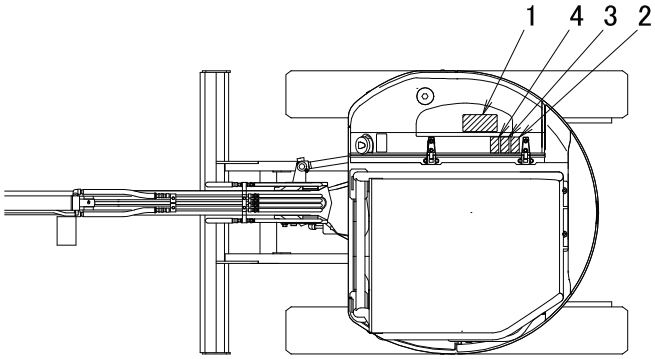

https://truckmanualshub.com/

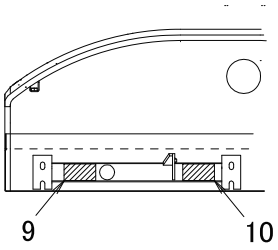

View A
Tank cover inside

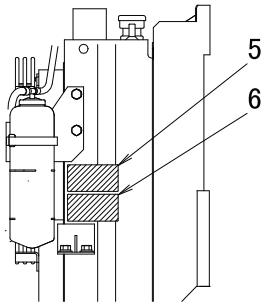

Radiator

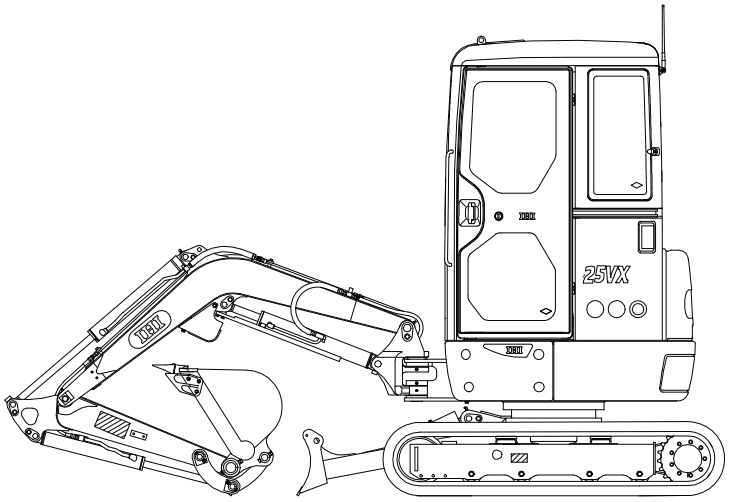

Cabin specification

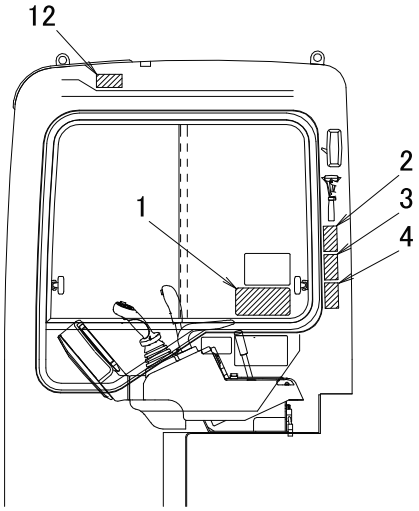

Operator's cab inside right

https://truckmanualshub.com/

1. Safety operation
   (440645800)

SAFETY OPERATION

1. Before and after everyday's operation, make sure to do daily inspection, lubrication and maintenance.
2. During operation, make sure all lamps are in normal condition and pay special care that people and any obstacle are well clear the machine.
3. Down the bucket on ground and stop the engine when machine is not in use.
4. When travelling on rough ground, try to level the ground as much as possible.
5. Do not squeeze-in below the machine being raised up by boom.
6. Do not use the bucket like a pickax, hammer or a broom.
7. Avoid to park the machine on inclined ground as much as possible. It not avoidable, put suitable block on the crawler shoes and down the blade to penetrate ground.

440645800

2. Read manual !
   (D405 359 00)
   Read manual before operation, maintenance, disassembly, assembly and transportation.

3. Crush hazard
   (D405 508 00)
   Sign indicates a hazard of being crushed or run over by unexpected moving of stopped machine.
   Lower working device to ground, move safety lever to lock position and take engine key with you before leaving machine.

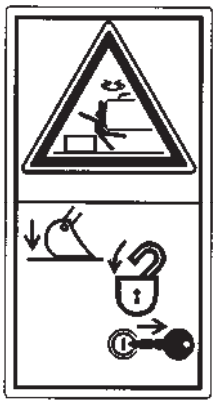

4. Electric power lines
   (D405 506 00)
   Sign indicates an electrocution hazard if machine is brought too near electric power lines. Keep a safe distance from electric power lines.

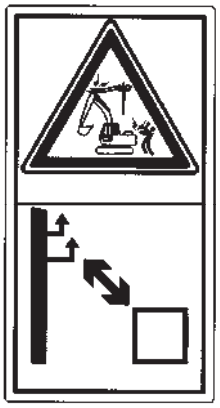

https://truckmanualshub.com/

5. Hazard of rotating parts
(D405 675 00)

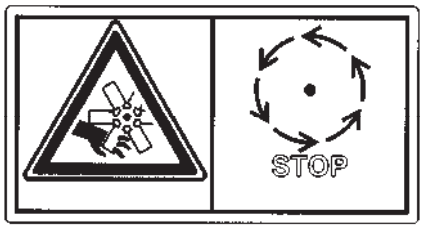

Sign indicates a hazard of rotating parts, such as fan.
Turn off before inspection and maintenance.

6. Hazard of rotating parts
(D405 674 00)

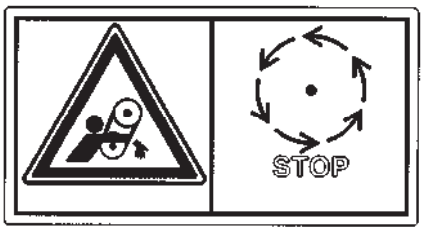

Sign indicates a hazard of rotating parts, such as belt.
Turn off before inspection and maintenance.

7. Keep away from swing area
(D405 507 00)
Sign indicates a crush hazard by rotation of upper structure of the machine.
Keep away from swinging area of machine.

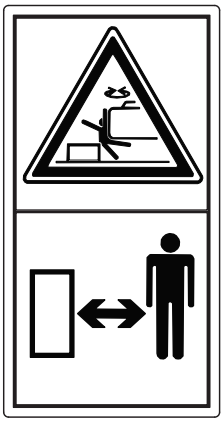

8. Keep away from machine
(D405 511 00)
Sign indicates a hazard of being hit by the working device of the machine.

9. Burn hazard
(D405 503 00)

Sign indicates a burn hazard from spurting hot water or oil if radiator or hydraulic tank is uncapped while hot.
Allow radiator or hydraulic tank to cool before removing cap.

10. Electrical hazard
(D405 504 00)

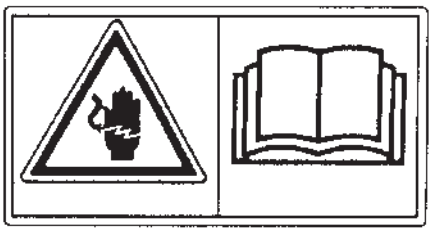

Sign indicates an electrical hazard from handling the cable.
Read manual for safe and proper handling.

https://truckmanualshub.com/

11. Warning for track adjuster
(D405 505 00)

D40550500

Sign indicates a hazard of flying plug from track adjuster that could cause injury.
Read manual before adjusting track for safe and proper handling.

12. Hazard from falling window
(D405 510 00)

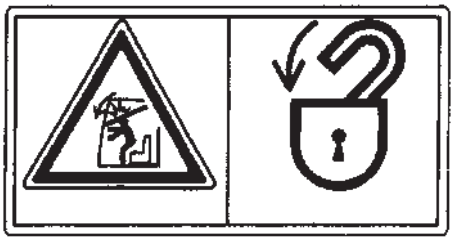

D40545300

Sign indicates a hazard from falling window.
After raising window, be sure to lock it in place with lock pins.

13. Do not operate
(D405 323 00)

D40532300

Operation prohibition during inspection and servicing.
Hang this sign on the control lever during inspection and servicing not to allow any other worker to start the engine or operate the machine.
When not in use, keep the sign in the toolbox.

https://truckmanualshub.com/

OPERATION

This section describes the proper operation procedures of this machine.
Always look to the safety and observe the given operation instructions and cautions to carry out works safely.

https://truckmanualshub.com/

NAMES OF COMPONENTS

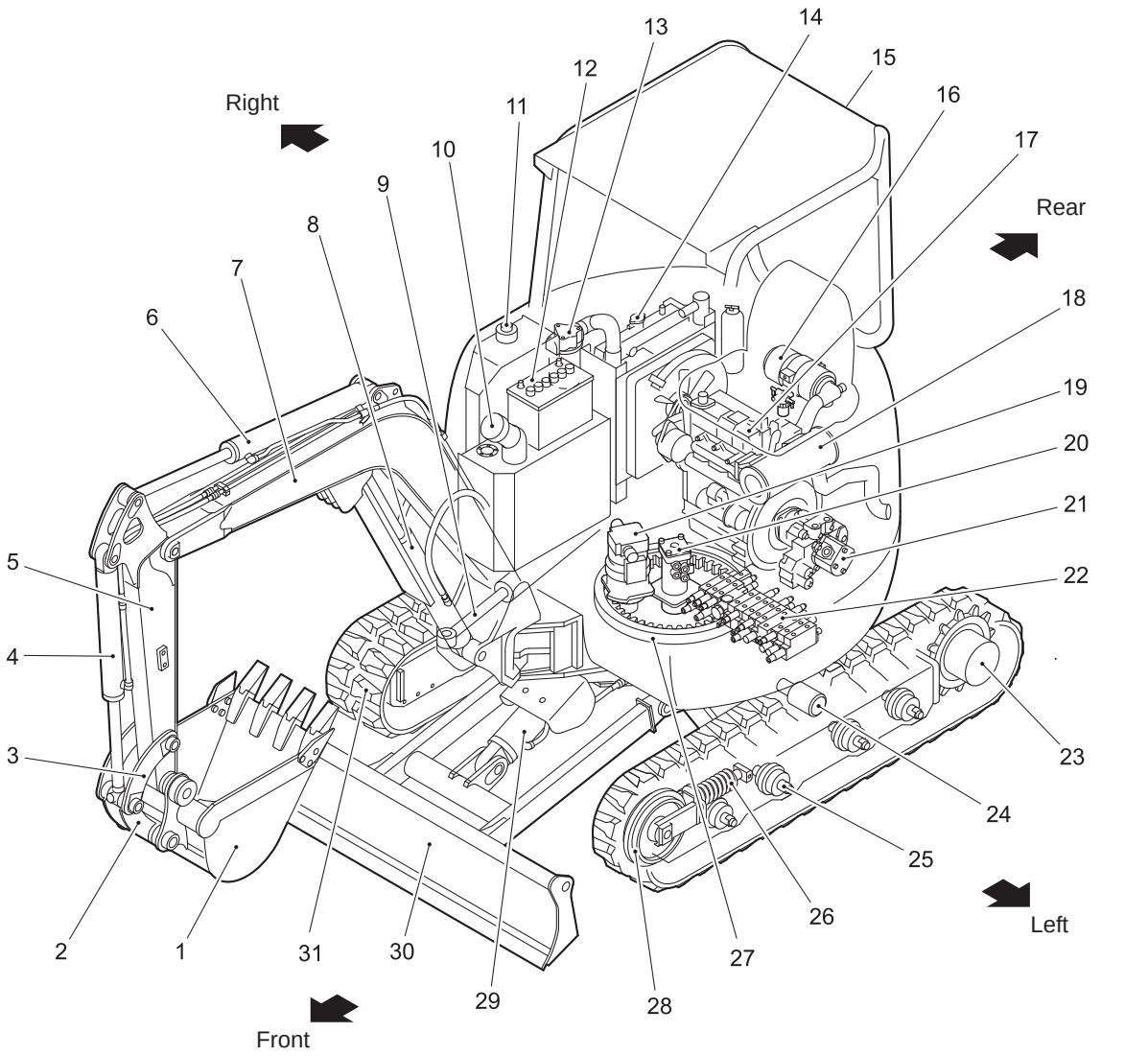

No.	Name	No.	Name	No.	Name
1	Bucket	12	Battery	23	Travel unit
2	Bucket link	13	Return filter	24	Upper roller
3	Arm link	14	Radiator and oil cooler	25	Lower roller
4	Bucket cylinder	15	Canopy	26	Shoe adjusting device
5	Arm	16	Air cleaner	27	Swing bearing
6	Arm cylinder	17	Engine	28	Front idler
7	Boom	18	Muffler	29	Blade cylinder
8	Boom cylinder	19	Swing unit	30	Blade
9	Boom swing cylinder	20	Rotary joint	31	Crawler shoe
10	Fuel tank	21	Hydraulic pump		
11	Hydraulic oil tank	22	Control valve		

https://truckmanualshub.com/

CONTROLS AND INSTRUMENTS

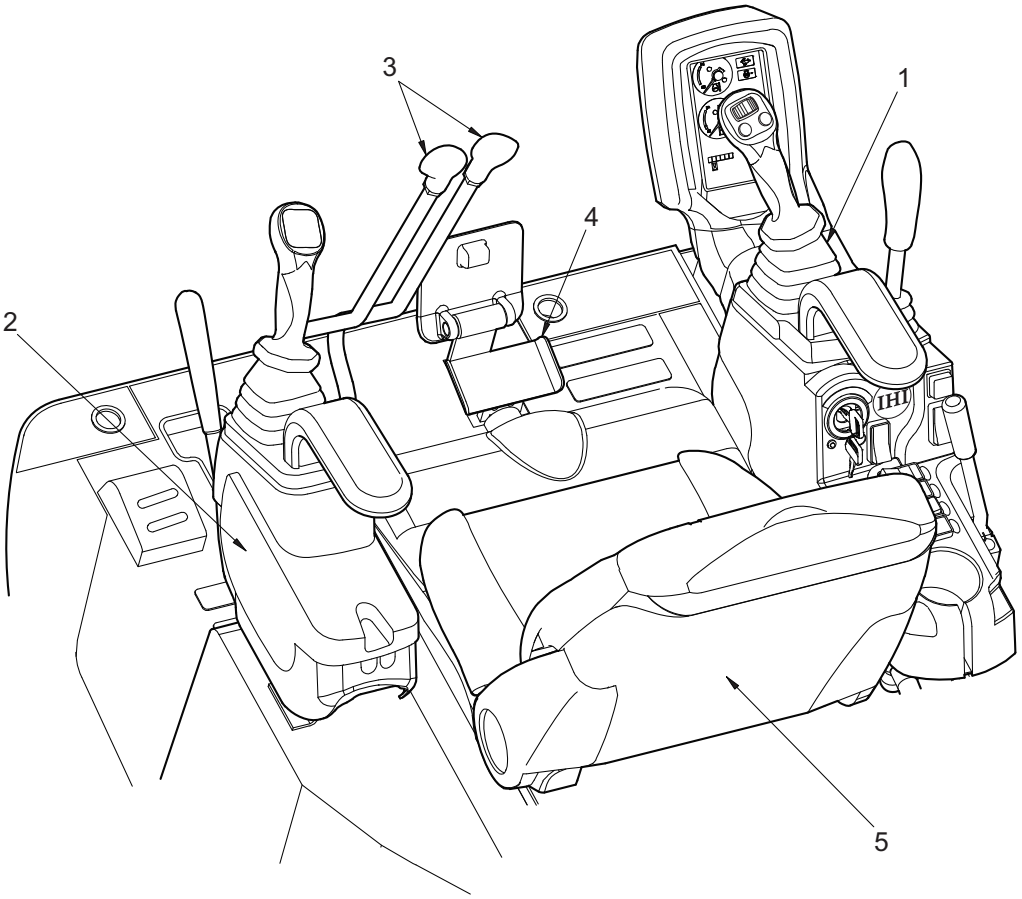

No.	Name	No.	Name
1	Right control box	4	Boom swing pedal
2	Left control box	5	Operator's seat
3	Travel lever		

https://truckmanualshub.com/

Right Control Box

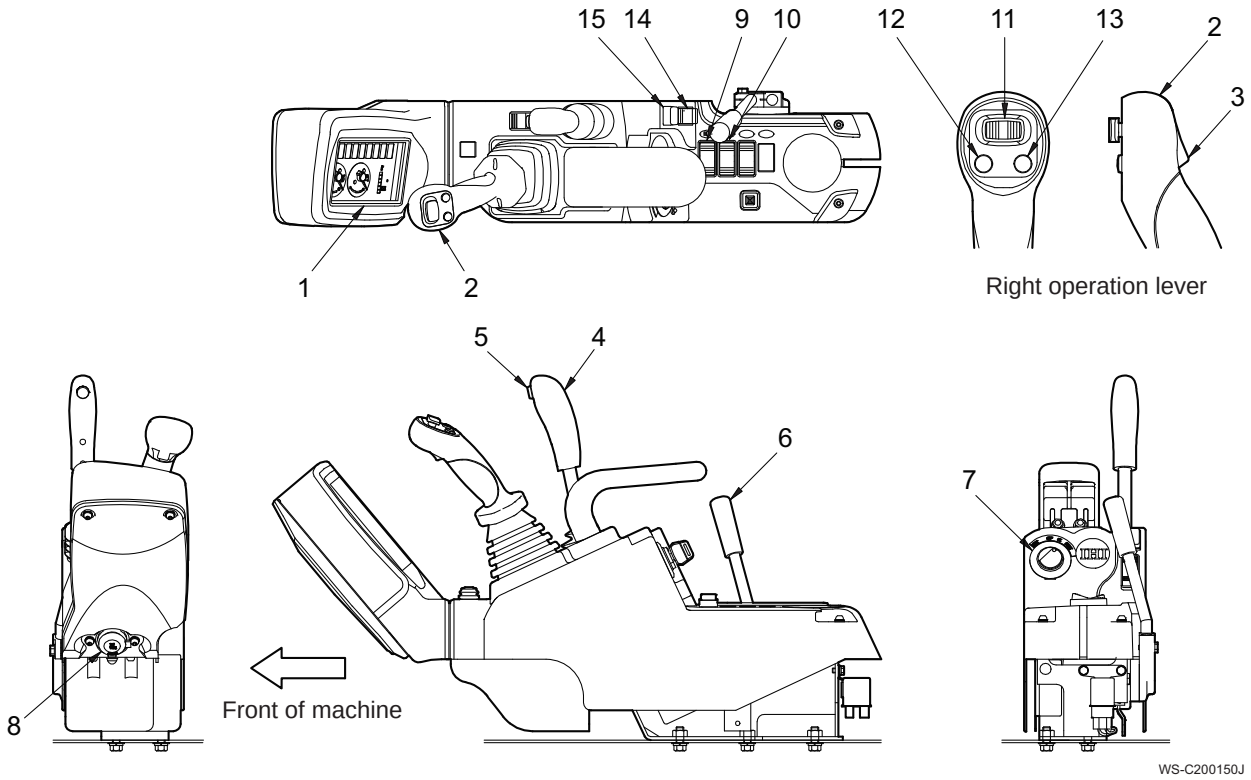

No.	Name	No.	Name
1	OK monitor	9	Light switch
2	Right operation lever	10	Heater switch (Option)
3	Horn switch	11	1st PTO slide switch (Option)
4	Blade lever	12	1st PTO left output switch (Option)
5	Travel speed select switch	13	1st PTO right output switch (Option)
6	Throttle lever	14	1st PTO slow mode switch (Option)
7	Engine key switch	15	1st PTO hold switch (Option)
8	Power outlet		

* The switches of 3rd PTO hydraulic power are shown in the section “PTO (POWER TAKE-OFF) WHEN USING SPECIAL ATTACHMENT”.

https://truckmanualshub.com/

1. OK monitor

When the engine key switch is set to the ON position, the engine oil pressure warning lamp and battery charge warning lamp turn on. Make sure, after the engine starts, that all warning lamps are off before starting work.

No.	Name
1	Travel speed lamp
2	Glow lamp
3	Battery charge warning lamp
4	Engine oil pressure warning lamp
5	(Not used)
6	Water separator warning lamp (option)
7	Gate lock warning lamp
8	One-touch decel lamp (option)
9	Water temperature gauge
10	Fuel gauge
11	Hour meter

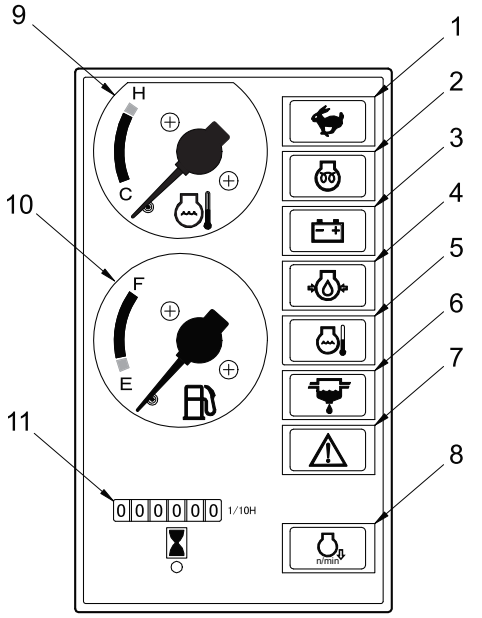

OK monitor

WC-C200040

NOTICE

- If some trouble occurs in the machine, the corresponding warning lamp turns on to indicate the trouble. If a warning lamp turns on during work, stop the engine immediately and check and repair the abnormal position.
- The OK monitor does not always warrant the machine condition. Take indication of the OK monitor and carry out startup inspection and daily inspection.
- Be sure to check the levels and contamination of the engine oil, cooling water, fuel tank and hydraulic oil tank visually.
- If the engine oil temperature is low, the hydraulic pressure becomes higher and the engine oil pressure warning lamp may turn on. It goes out when the engine is warmed up. Stop the engine and carry out inspection and repair work if the lamp does not go out even after warming up.

https://truckmanualshub.com/

Travel speed lamp

This lamp turns on, when the high speed is selected. When the switch is pressed again, the travel speed is changed into the low speed and the lamp turns off.

WC-C200050

Glow lamp

This lamp turns on when the engine key switch is set to the HEAT position, indicating that preheat. The lamp turns off after 4 seconds.

WC-C200060

Battery charge warning lamp

This lamp turns on if some trouble occurs in the charging system while the engine is running. If it turns on while the engine is running, the fan belt may be slack. Stop the engine and check it.

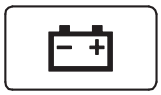

WC-C200070

Engine oil pressure warning lamp

This lamp turns on if the lubricating oil pressure lowers while the engine is running. Stop the engine and check the lubrication system and lubricating oil quantity if this lamp turns on while the engine is running.

WC-C200080

Not used

WC-C200090

Water separator warning lamp

This lamp turns on if water is collected up to the specified level in the water separator. Stop the engine and discharge water from the water separator when this lamp turns on.

WC-C200100

Gate lock warning lamp

This lamp turns on if the engine key switch is set to the START position though the gate lock lever is not at its locked position. The engine cannot be started in such a condition. Put the gate lock lever in its locked position to start the engine.

WC-C200110

One-touch decel lamp

This lamp turns on when the decel switch is on and turns off when the decel switch is off.

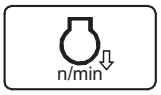

WC-C200120

https://truckmanualshub.com/

Water temperature gauge

- This gauge indicates the temperature of engine cooling water.
- It is proper if the pointer indicates a temperature in the black range during operation.
- Warm up the engine until the pointer indicates a temperature in the black range after the engine starts.
- Idle the engine and wait until the temperature lowers to the black range if the pointer indicates a temperature in the red range during operation. Check the water level in the subtank, water leak from the engine and radiator and fan belt.

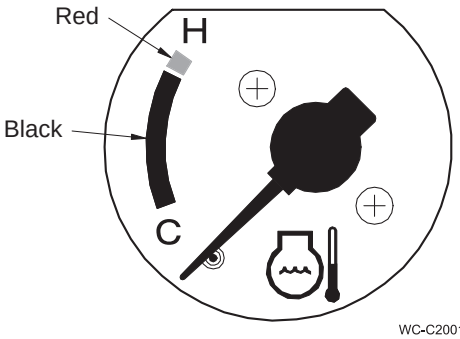

WC-C200131

Fuel gauge

- This gauge indicates the fuel level in the fuel tank.
  F: The fuel tank is full.
  E: Fuel is insufficient. Refill the tank with fuel.

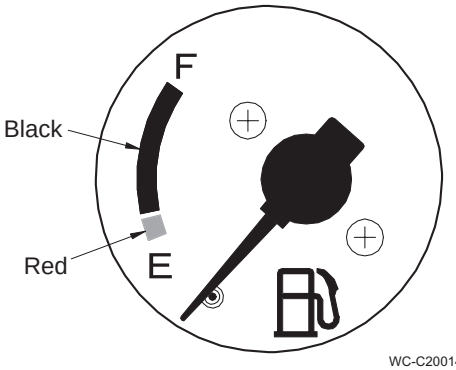

WC-C200140

Hour meter

This meter indicates the accumulative running time in units of 1/10 hour (six minutes).
It advances as long as the engine is running, even if the machine is not working.

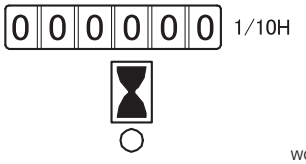

WC-C200150

2. Right operation lever

Use this lever to operate the boom and bucket.

- Boom raise: Pull the lever backward.
- Boom lower: Push the lever forward.
- Bucket dig: Turn the lever to the left.
- Bucket dump: Turn the lever to the right.
- Stop: Release your hand from the lever. The lever returns to the neutral position automatically and operation stops.
- Simultaneous operation: Turn the lever diagonally to operate the boom and bucket simultaneously.

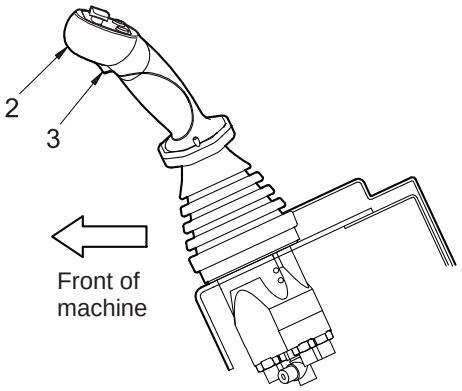

WC-C200160

3. Horn switch

Press this switch to turn on the horn.

https://truckmanualshub.com/

4. Blade lever

Use this lever to raise and lower the blade.

- Raising the blade: Pull the lever backward.
- Lowering the blade: Push the lever forward.

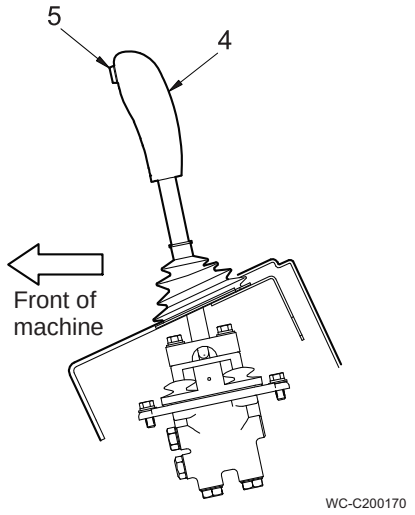

5. Travel speed select switch

Use this switch to select the low and high travel speeds. Press the switch during traveling at the low speed to change it into the high speed. Press the switch again to change the high speed into the low speed.
Every time this switch is pressed, the travel speed changes from high into low, and vice versa, alternately.
A selected speed is maintained.

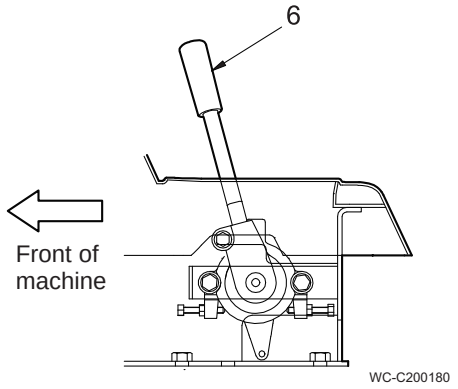

6. Throttle lever

Use this lever to adjust the engine speed.

- Low speed: Push the lever forward.
- High speed: Pull the lever backward.

7. Engine key switch

Use this switch to start and stop the engine.

HEAT (preheat)

Set the switch to this position to preheat the engine if the engine is cold in cold seasons.
Keep the switch at the HEAT position for approximately 4 seconds. Preheating is complete and the glow lamp turns off. Turn the key to the START position to start the engine when the glow lamp turns off.

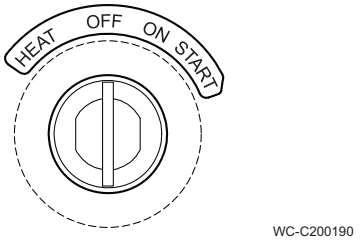

OFF (stop)

The key may be inserted and removed at this position. Power of all electrical systems is cut off and the engine stops.

ON (run)

Power is supplied to the electrical systems and the OK monitor lamp turns on.

START (start)

Set the switch to this position to start the engine. Release the fingers from the key immediately after the engine starts.
The key returns to the ON position automatically.

https://truckmanualshub.com/

8. Power outlet

This is a power socket for standby power source. Use it within the following capacity.
Capacity: 12 V, 120 W
Always keep the cap closed when this socket is not used.

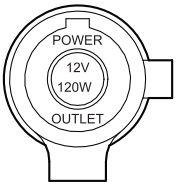

WC-C200200

9. Light switch

Use this switch to turn on and off the front light of the boom.

- Turning on: Press the ON side of the switch.
- Turning off: Press the OFF side of the switch.

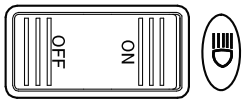

WC-C200230

10. Heater switch

Use this switch to turn on and off the fan of the heater.

- Turning on: Press the ON side of the switch.
- Turning off: Press the OFF side of the switch.

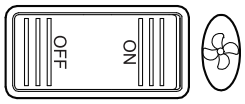

WC-C200240

11. 1st PTO slide switch

Sliding to left: Pressurized oil is supplied to the left PTO pipe of the arm.
Sliding to right: Pressurized oil is supplied to the right PTO pipe of the arm.

12. 1st PTO left output switch

When this switch is pressed, pressurized oil is supplied to the left PTO pipe of the arm. Supply of pressurized oil stops when the finger is released from the switch.

13. 1st PTO right output switch

When this switch is pressed, pressurized oil is supplied to the right PTO pipe of the arm. Supply of pressurized oil stops when the finger is released from the switch.

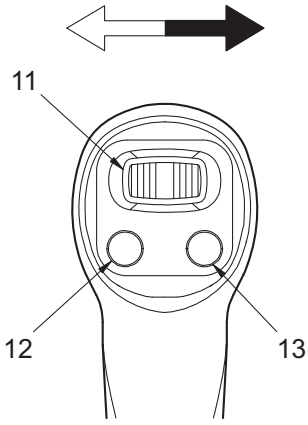

Right operation lever

WS-C200160

https://truckmanualshub.com/

14. 1st PTO slow mode switch

Use this switch to operate the 1st PTO slide switch.

ON: The supply flow is reduced to approximately half.

OFF: The switch is reset.

15. 1st PTO hold switch

Use this switch to operate the 1st PTO left output switch.

ON: The continuous operation is possible.
When the 1st PTO left output switch is pushed once, the pressurized oil can be continuously supplied to the left PTO pipe.
At this time the lamp turns on.

OFF: The switch is reset.
The resetting allows for returning to OFF position and the lamp goes out.

This switch is suitable for continuous one-way operation such as the breaker.

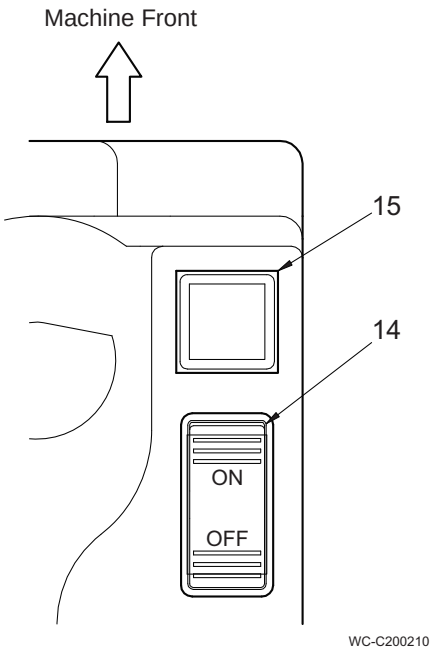

https://truckmanualshub.com/

Left Control Box

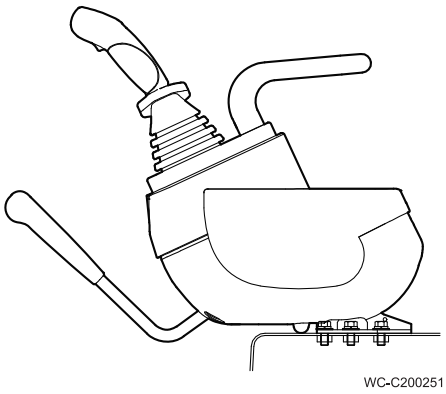

1. Left operation lever

Use this lever to operate the arm and swing.

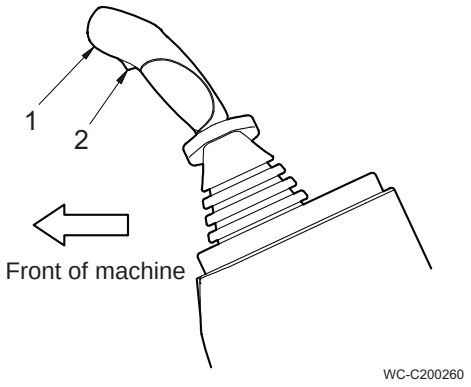

- Arm in: Pull the lever backward.
- Arm out: Push the lever forward.
- Swing left: Turn the lever to the left.
- Swing right: Turn the lever to the right.
- Stop: Release your hand from the lever. The lever returns to the neutral position automatically and operation stops.
- Simultaneous operation: Turn the lever diagonally to operate the arm and swing simultaneously.

2. One-touch decel switch (option)

When the decel switch is set to the ON position, the engine speed is reduced automatically to reduce fuel consumption. When the decel switch is set to the OFF position, the engine speed is returned to the previous engine speed.

Every time this switch is pressed, the one-touch decel lamp on the OK monitor turns on and off alternately.

https://truckmanualshub.com/

3. Gate lock lever

Use this lever to lock all operations.

The gate lock lever moves together with the control box.

- Lock: Pull up the gate lock lever.
- Unlock: Push down the gate lock lever.

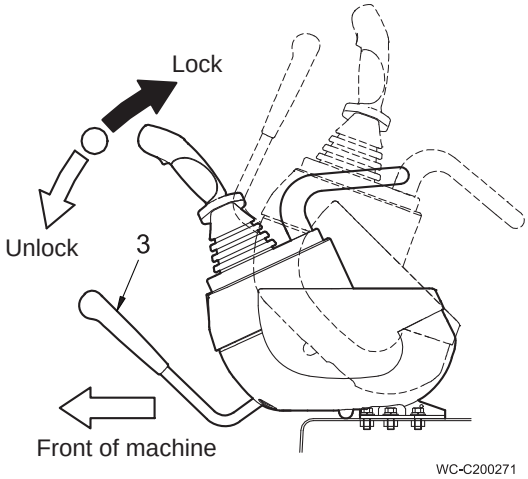

WARNING

- If the operation lever is touched carelessly in the condition where the gate lock lever is not at the locked position, the machine may move unexpectedly, resulting in a dangerous accident.
- Stop the engine and put the gate lock lever in its locked position when you leave the operator's cabin.
- Be careful not to touch the left operation lever when using the gate lock lever.

Travel Levers

Use these levers to control traveling.

Forward: Push the right and left travel levers forward.

Backward: Pull the right and left travel levers backward.

Stop: Release your hands from the levers. The levers return to the neutral positions automatically and operation stops.

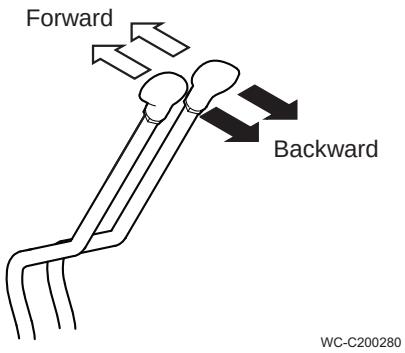

WARNING

- If forward movement and backward movement are mistaken during traveling, a serious accident may result.
- Forward movement means forward movement with the blade in the front position. If the blade is at the rear position, the traveling directions are contrary to the lever operations.
- Check if the blade is in the front or rear position before operating the travel levers.

https://truckmanualshub.com/

Boom Swing Pedal

Use this pedal to swing the boom.
Open the pedal cover to the unlocked position.
Left boom swinging: Step on the left side of the pedal.
Right boom swinging: Step on the right side of the pedal.

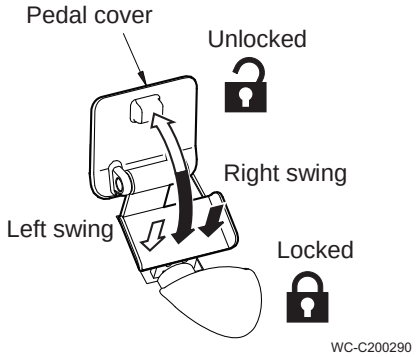

⚠ CAUTION

Put the pedal cover over the pedal to disable pedaling when boom swinging is not carried out.

Operator's Seat

Sit on the operator's seat and adjust it to the condition where the operation levers and pedals may be used smoothly.
Back and forth adjustment:
Move the seat back and forth while pulling the slide lever (1) to adjust the seat position.
Reclining adjustment:
Move the back seat (3) back and forth while pulling the lever (2) to adjust the back seat angle.

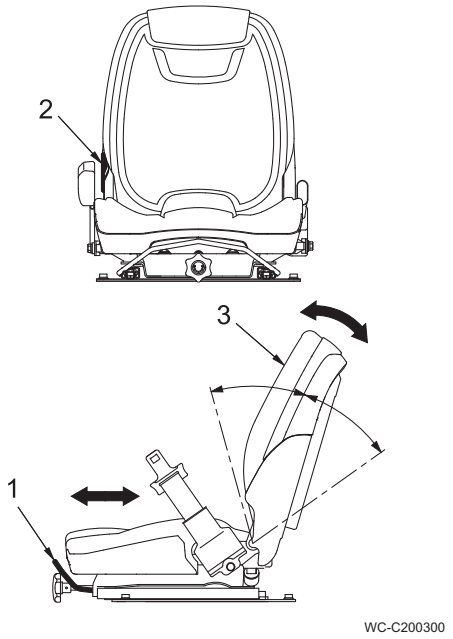

⚠ CAUTION

Lower the bucket onto the ground and stop the engine before adjusting the operator's seat.

Seat belt

Hold the grip (1), insert the tongue plate (2) into the buckle (3) to the end, and make sure that it is locked.

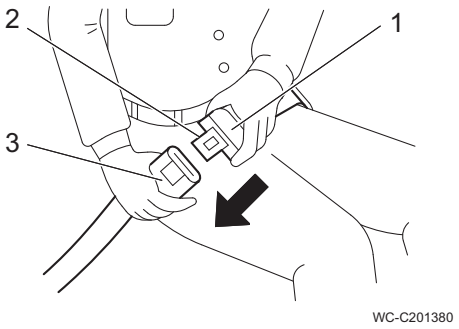

⚠ CAUTION

- Fasten the seat belt during operating.
- Be sure to check the belt, tongue plate, buckle, etc. before starting operating. Replace the damaged belt, tongue plate and/or buckle with new one(s).

https://truckmanualshub.com/

Operator's Cabin

Door lock

- The door may be locked at the fully opened or closed position.
  Push the door until it is locked completely.
  Lock the door completely before starting work.
- Turn the lever (1) backward to unlock the door inside the cabin. The door is unlocked and may be opened and closed.
- Pull the door handle (2) toward you to unlock the door outside the cabin. The door is unlocked and may be opened and closed.

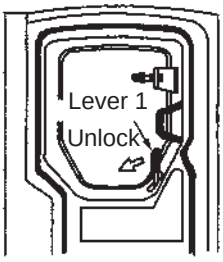

Unlocking door from inside

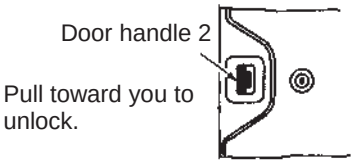

Unlocking door from outside cabin

WC-C200310

Opening and closing front cabin window

⚠ CAUTION

- Move down the front window slowly, when closing it, with care not to pinch your hand, etc.
- Be sure to fix the front window with the right and left lock pins (2), in addition to the automatic lock (4), when opening and storing it on the ceiling.

Opening

(1) Disconnect the wiper motor cable from the socket (1).
(2) Disengage the right and left lock pins (2) at the top of the front window and fix them.
(3) Hold the handles (3) of the front window. Lift the front window and move it to the ceiling.
(4) Make sure that the front window is fixed with the automatic lock at the upper center of the rear part of the cabin. Then, insert the right and left lock pins into the lock holes to fix the window.

Closing

(1) Disengage the right and left lock pins at the top of the front window and fix them.
(2) Pull the lock lever of the automatic lock (4) at the upper center of the rear part of the cabin to unlock the window.
(3) Hold the handles and lower the front door slowly.
(4) Insert the right and left lock pins into the lock holes to fix the front window while pressing the upper part of the window.
(5) Connect the wiper motor cable to the socket.

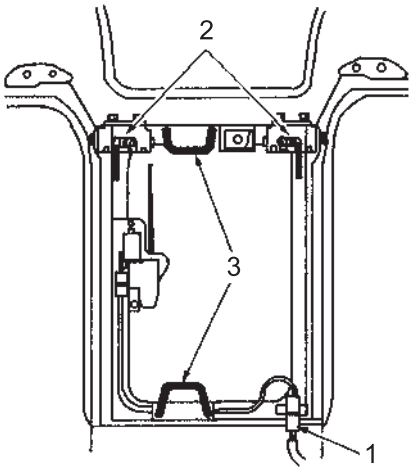

Front door of cabin

WC-C200320

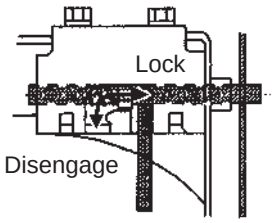

Lock pin 2

WC-C200330

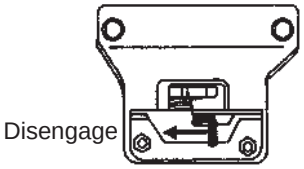

Automatic lock 4 at center

WC-C200340

https://truckmanualshub.com/

Wiper switch

Use this switch to start and stop the wiper.

OFF: The wiper stops.

ON: The wiper starts.

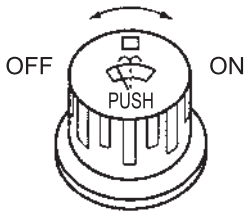

WC-C200350

NOTICE
• Do not start the wiper in the condition where the window is dry, muddy or snowy. • Never turn on the wiper switch when the cabin front window (upper) is stored on the ceiling.

Window washer switch

Use this switch to spout window washer liquid. Washer liquid spouts out of the nozzle while the wiper switch is kept depressed.

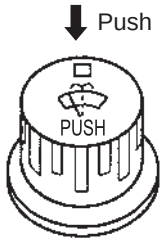

WC-C200360

NOTICE
Do not push the switch if wind washer liquid is lacking.

Cigarette lighter

When this lighter is pushed, the switch is turned on and the lighter is pressed out several seconds later automatically. Pull and use it.

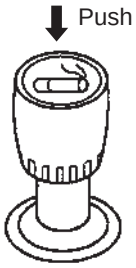

WC-C200370

NOTICE
Use the lighter for cigarette only.

https://truckmanualshub.com/

STARTING ENGINE

Check before Starting Engine

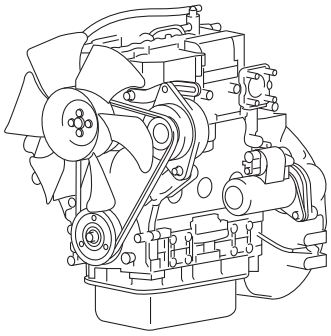
WC-C201220

1. Sit on the operator's seat and adjust it to the condition where the operation levers and pedals may be used smoothly.

2. Make sure that the gate lock lever is set at the locked position.

3. Make sure that each lever is set at the neutral position.

4. Insert the key into the engine key switch. Turn it to the ON (run) position and make sure of the following.

   - The engine oil pressure warning lamp (1) and battery charge warning lamp (2) are lit continuously. (It is normal if the engine oil pressure warning lamp and battery charge warning lamp go out when the engine starts.)

   - Push the light switch and make sure that the front lights are turned on.

   - Push the horn switch and make sure that the horn sounds.

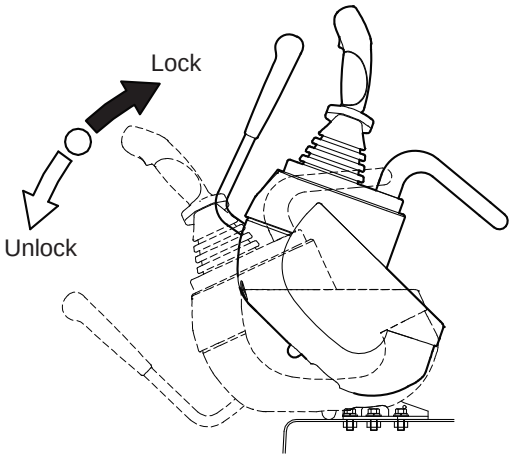

WC-C200380

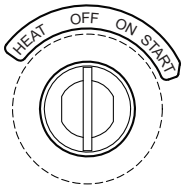

WC-C200190

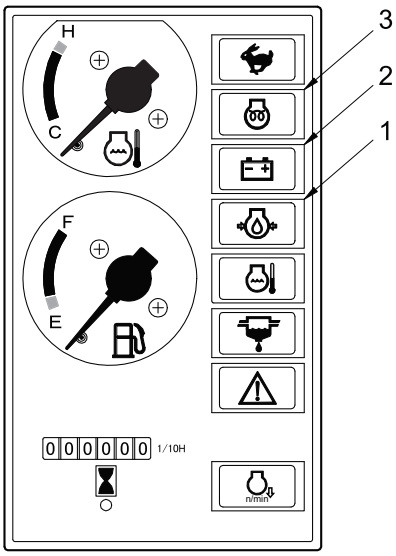

WC-C200390

https://truckmanualshub.com/

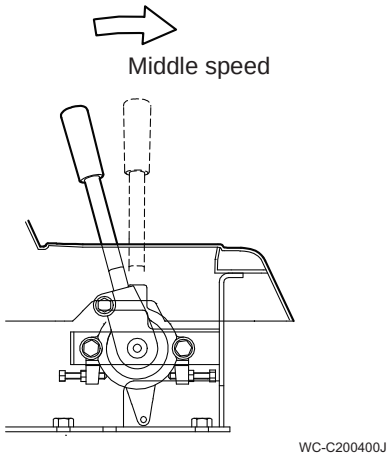

Normal Starting

1. Set the throttle lever to the middle speed.
2. Turn the starter switch key to the START position to start the engine.
3. Release your fingers from the key when the engine starts.
   The key returns to the ON (run) position automatically.
4. Push the gate lock lever down to the release position to start work.

⚠ CAUTION

- Check if there are no persons or obstacles around the machine, turn on the horn, and start then.
- Be sure to sit on the operator's seat and start the engine.
- Set the gate lock lever to the lock position and restart the engine, if the engine stops with the gate lock lever set at the release position.

NOTICE

Do not turn the starting motor for 15 seconds or more. If the engine fails to start, return the key to the OFF position, wait for 30 seconds, and try to start the engine again.

Starting in Cold Seasons

Preheat the engine with the glow plug in cold seasons to make it easy to start the engine.

1. Set the throttle lever to the middle speed.
2. Turn the key counterclockwise and keep it at the HEAT (preheat) position. Preheating starts and the glow lamp (3) turns on. Wait until it goes out (for approximately 4 seconds).
   The engine oil pressure warning lamp (1) and battery charge warning lamp (2) also turn on when the key is set at the HEAT (preheat) position. However, this does not imply any abnormality.
3. Turn the key to the START position to start the engine after the glow lamp goes out.
4. Release your fingers from the key after the engine starts.
   The key returns to the ON (run) position automatically.

https://truckmanualshub.com/

Starting Engine with Booster Cables

Follow the instructions shown below to start the engine using the booster cables.

⚠ WARNING

- If the booster cables are connected improperly, the battery will be shorted, resulting in a dangerous accident. Never connect the ⊕ and ⊖ terminals.
- The battery produces flammable hydrogen gas, which is explosive. Do not bring fire close to it or produce sparks near it.

NOTICE

The electrical circuits of this machine run on 12 V. Use a 12 V auxiliary battery.

Never connect the ⊕ and ⊖ terminals.

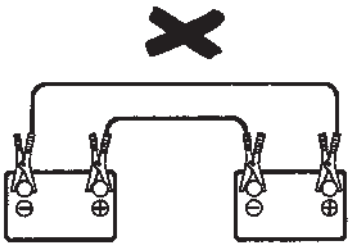

WC-C200410

Order of connecting booster cables

1. Set the engine key switches of the normal machine and machine in trouble to the OFF positions.
2. Connect the clip of the booster cable (red) to the ⊕ terminal of the machine in trouble. Connect the other clip to the ⊕ terminal of the normal machine.
3. Connect the clip of the booster cable (black) to the ⊖ terminal of the normal machine. Connect the other clip to the upper frame of the machine in trouble.

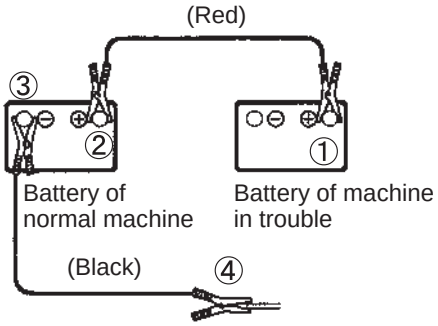

Order of connecting booster cables

①→②→③→④

WC-C200420

Starting engine

1. Make sure that the cable clips are connected to the battery terminals and upper frame firmly.
2. Start the engine of the normal machine and keep the engine running at high revolution.
3. Start the engine of the machine in trouble.

Disconnecting booster cables

1. Disconnect the clip of the black cable from the upper frame first. Then, disconnect the clip from the ⊖ terminal of the normal machine.
2. Disconnect the clip of the red cable from the ⊕ terminal of the normal machine first. Then, disconnect the clip from the ⊕ terminal of the machine in trouble.

Order of disconnecting booster cables

④→③→②→①

CA-C300120

https://truckmanualshub.com/

Check after Starting Engine

1. Checking operation of the OK monitor
   Make sure that all lamps on the OK monitor are off.

2. Check if the engine exhaust color, sound and vibrations are proper.

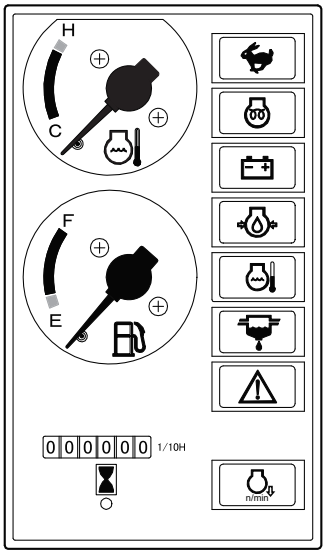

WC-C201400

NOTICE
• Do not accelerate the engine or apply loads to it quickly when the cooling water temperature is low. • Stop the engine immediately, find the cause and repair troubles, if some troubles are found.

Warming Up Engine

1. Idle the engine to warm it up for approximately 10 minutes after the engine starts.

2. Lift the bucket from the ground and repeat cycles of moving the bucket lever to the digging or dumping position for 10 to 15 seconds and keeping it at the neutral position for about 10 seconds for five minutes to raise the hydraulic oil temperature, if the hydraulic oil temperature is low.

3. Then, repeat all operations, including turning, traveling and moving the attachment, three to five times to warm up all devices.

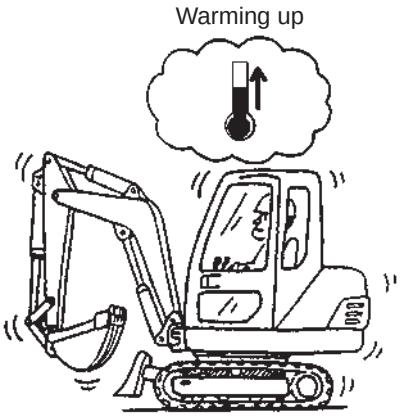

WC-C200430

NOTICE
Do not carry out high-speed operation quickly when the hydraulic oil temperature is low (below 20ºC). The proper hydraulic oil temperature is 50ºC to 80ºC. Warm up hydraulic oil up to 20ºC or so and then carry out operation, if it is necessary to start operation at low temperature.

https://truckmanualshub.com/

STOPPING ENGINE

⚠ WARNING

If you touch the operation lever by mistake without locking the gate lock device, the machine may move unexpectedly, resulting in a dangerous accident.

Lower the attachment onto the ground, stop the engine and set the gate lock lever to the lock position before you leave the operator's seat.

• Stopping machine

1. Park the machine on a safe, flat and rigid ground not in danger of stone dropping, landslide, etc.
2. Raise the arm and lower the bucket onto the ground with its bottom horizontal.
3. Lower the blade onto the ground.
4. Set the gate lock lever to the locked position.

WC-C200440

• Stopping engine

1. Idle the engine for five minutes or so to lower the engine temperature.
2. Set the engine key switch to the OFF (stop) position to stop the engine.
3. Pull out the key from the engine key switch.

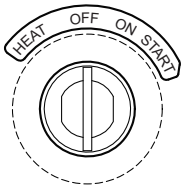

WC-C200190

• Inspection and locking after engine stops

1. Check each part for oil leak, water leak and damages. Carry out repair work if leak or some abnormality is found.
2. Refill the fuel tank fully.
3. Remove soil and sand from around the crawlers and bucket.
4. Lock all the lockable parts such as the fuel port, engine cover, etc.
   Lock the front and rear windows, if the machine has a cabin. Lock the door.

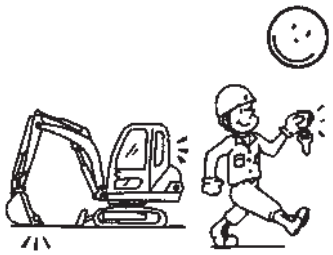

WC-C200450

https://truckmanualshub.com/

EMERGENCY ACTIONS IF ENGINE STOPS

If the machine stops due to an engine trouble in the condition where the boom is raised, the boom will not lower even though the boom operation lever is set to the low position. If the machine is left in this condition, the boom is in danger of dropping. Lower the boom by one of the methods shown below.

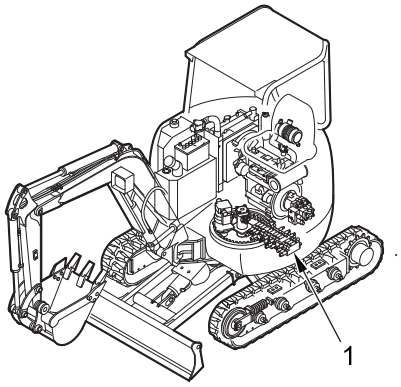

WC-C201160

- **If the starting motor runs though the engine does not start**

Set the engine key switch to the START position in the condition where the boom operation is set to the low position. Rotate the engine with the starting motor to lower the boom.

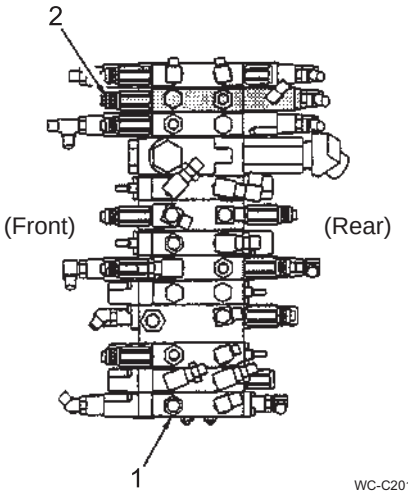

WC-C201170

NOTICE
Do not rotate the starting motor for 10 seconds or more. Wait two minutes or so and restart the motor then.

- **If the engine does not rotate at all**

1. Detach the floor cover in the operator's cabin.
2. Loosen the lock nut (3) of the overload relief valve (2) for raising the boom in front of the control valve (1). Loosen the adjust screw (4) gradually.
3. Stop loosening the adjust screw when the boom begins to lower. Wait until the bucket moves down to the ground.

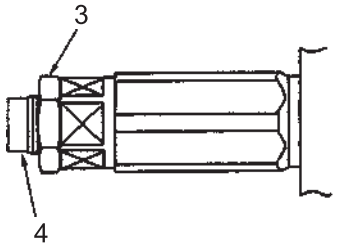

Overload relief valve

WC-C201180

NOTICE
Do not turn back the adjust screw. It requires special adjustment technique accompanied by pressure measurement. Ask our service office to repair the engine and adjust the screw.

https://truckmanualshub.com/

RUNNING IN NEW MACHINE

NOTICE
If a new machine is used by force, the performances may be deteriorated earlier and the service life may be shortened. Run in the machine for the initial 50 hours.

Follow the instructions below and run in the new machine.

1. Warm up the machine sufficiently.

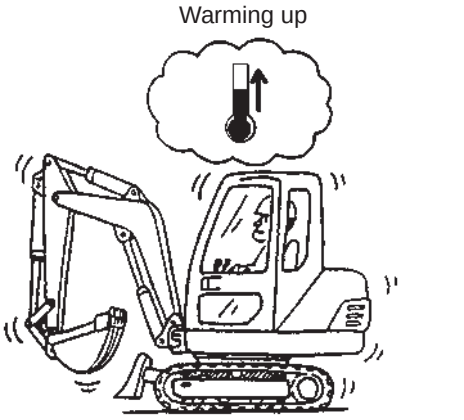

WC-C200430

2. Do not run the machine with heavy loads or at high speed.
   Run the machine at about 80% of the maximum engine revolution.

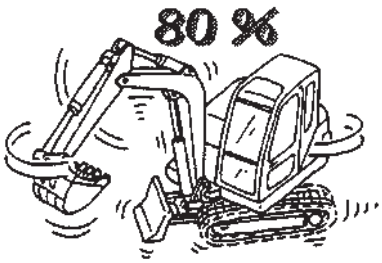

WC-C200460

3. Do not apply the full load to the machine. The adequate load is 80% or so.
   Do not run the machine by force.
4. Do not start, accelerate or stop the machine quickly or change the direction quickly.
5. Do not apply shocks such as quick stopping of the boom when lowering it to the machine.
6. Grease the pins of the attachment everyday.

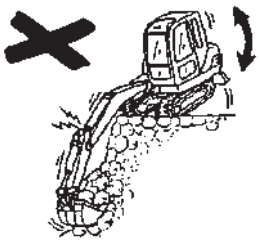

WC-C200470

https://truckmanualshub.com/

LEVER OPERATIONS

Operation Mode

Six operation patterns are available. The handling methods of the operation levers and machine movements differ with these patterns.

Check the operation mode before using the levers. The operation mode plate is stuck on the right of the operator's seat.

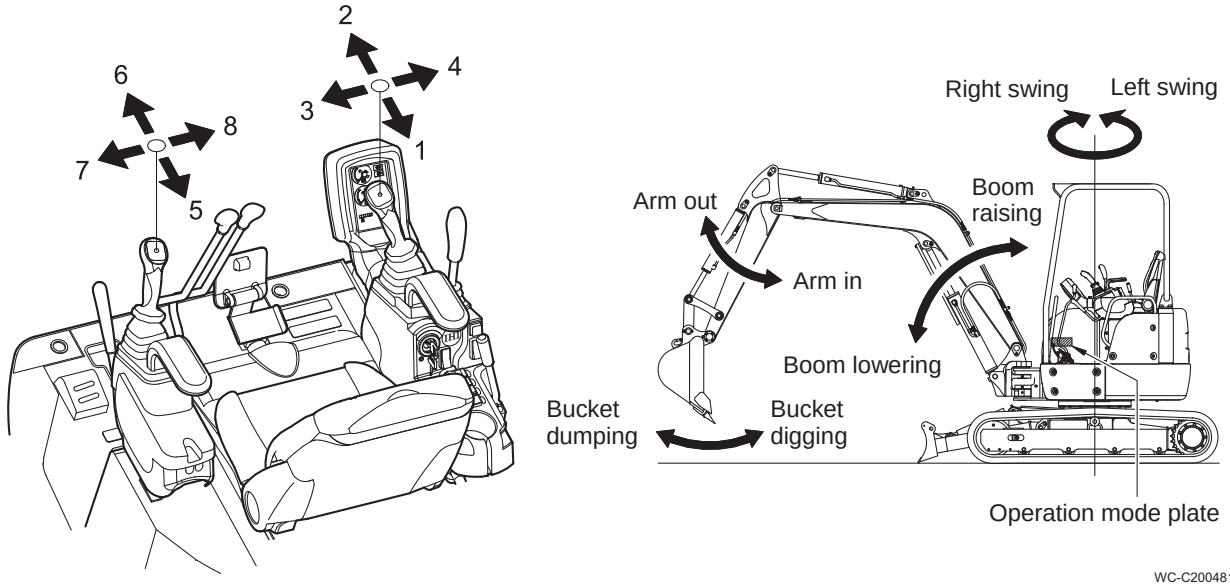

Operation direction	Operation mode					
	Pattern A	Pattern B	Pattern C	Pattern D	Pattern F	Pattern G
1	Boom raising	Boom raising	Arm in	Arm out	Arm in	Boom raising
2	Boom lowering	Boom lowering	Arm out	Arm in	Arm out	Boom lowering
3	Bucket digging	Bucket digging	Left swing	Left swing	Bucket digging	Left swing
4	Bucket dumping	Bucket dumping	Right swing	Right swing	Bucket dumping	Right swing
5	Arm in	Left swing	Boom raising	Boom raising	Boom raising	Arm in
6	Arm out	Right swing	Boom lowering	Boom lowering	Boom lowering	Arm out
7	Left swing	Arm out	Bucket dumping	Bucket dumping	Left swing	Bucket dumping
8	Right swing	Arm in	Bucket digging	Bucket digging	Right swing	Bucket digging

⚠ WARNING

Check the action of each operation lever and movement of the machine before starting work in order to prevent accidents, which may result in injury or death, due to improper operations.

https://truckmanualshub.com/

Operation Mode Plate

The corresponding operation mode plate shown below is stuck on the right of the operator's seat.

Operation mode	Operation mode plate
Pattern A	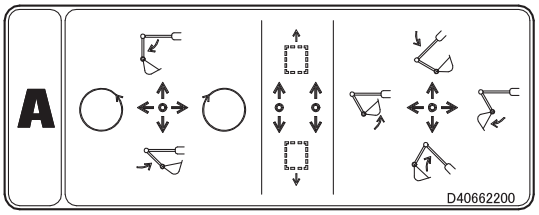 D40662200
Pattern B	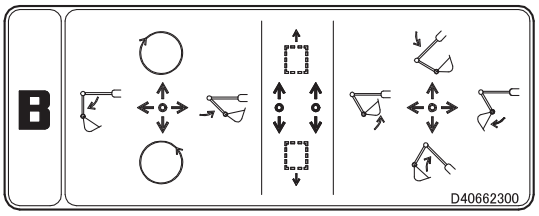 D40662300
Pattern C	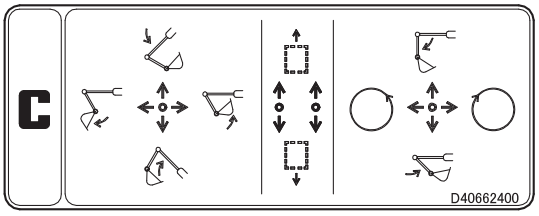 D40662400
Pattern D	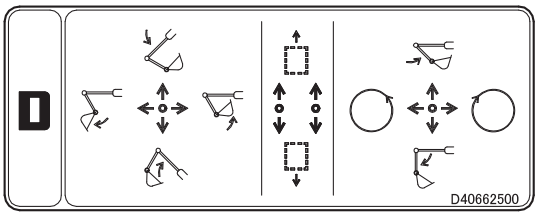 D40662500
Pattern F	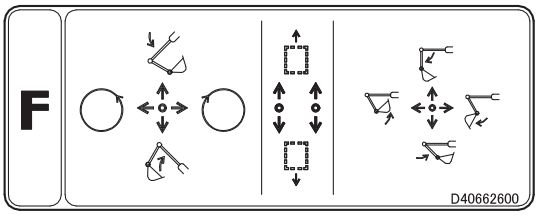 D40662600
Pattern G	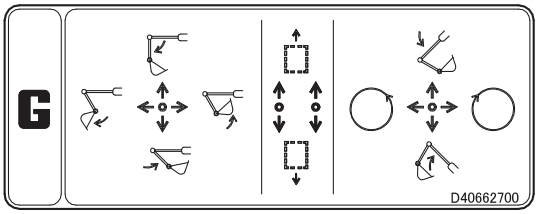 D40662700

https://truckmanualshub.com/

AF Multi-selection Method (for Machine with AF Multi-selector Valve)

Two operation patterns A and F can be changed with the selector valve.

Lower the attachment onto the ground and stop the engine before changing the operation mode.

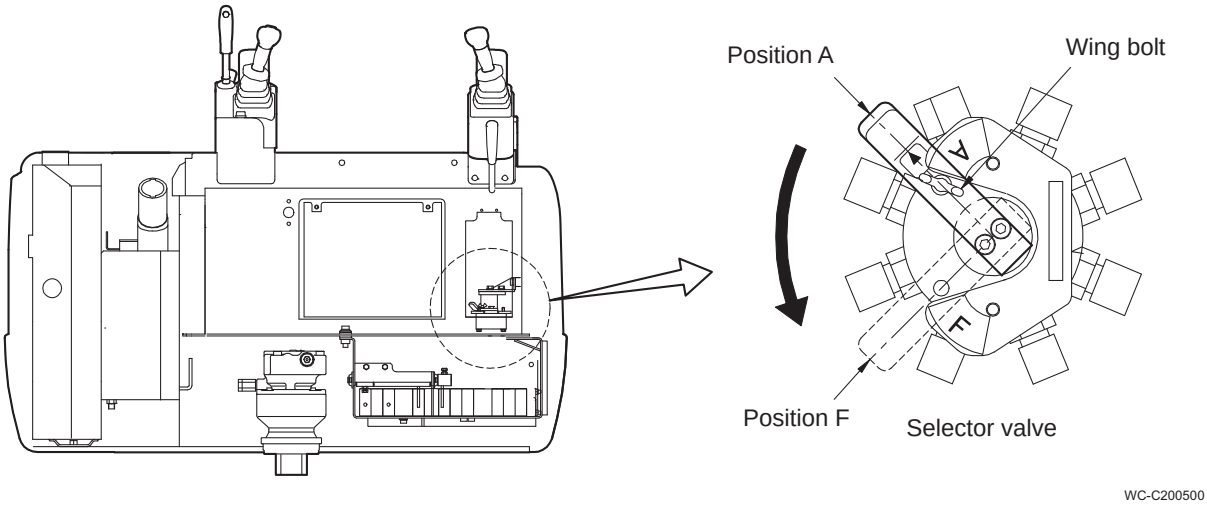

1. The selector valve is inside the front left cover.
2. Loosen the wing bolt that fixes the selector valve lever. Set the lever to the intended position.
3. Fix the selector valve lever with the wing bolt after changing the operation mode.

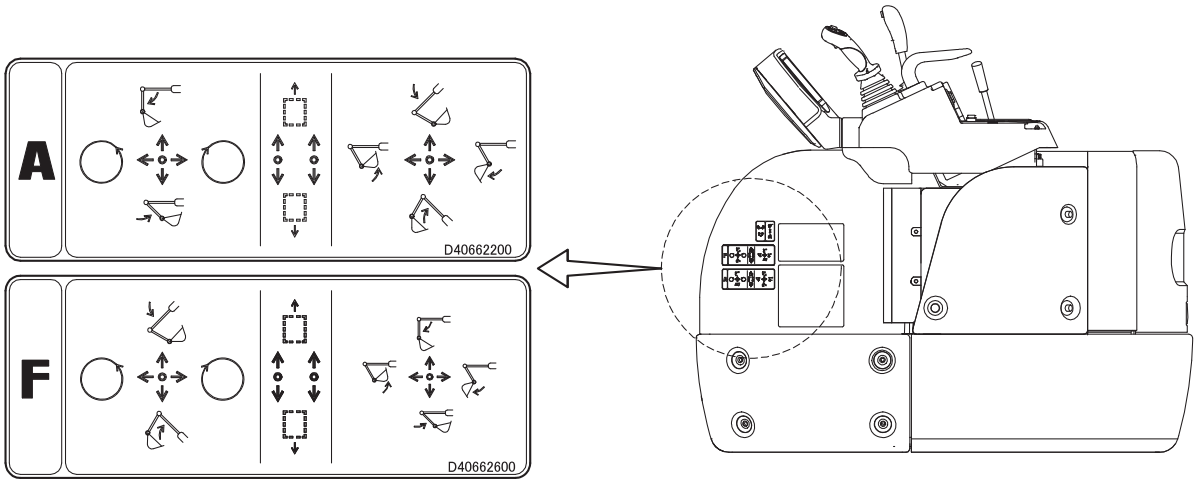

Operation mode plate (pattern A, F)

⚠ WARNING

- Set the gate lock lever to the lock position before changing the operation mode.
- Check the action of each operation lever and movement of the machine before starting work in order to prevent accidents, which may result in injury or death, due to improper operations.
- Carry out minute operation and make sure that the operation mode has been changed properly after changing it.

https://truckmanualshub.com/

ABG Multi-selection Method (for Machine with ABG Selector Valve)

Three operation patterns A, B and G can be changed with the selector valve.

Lower the attachment onto the ground and stop the engine before changing the operation mode.

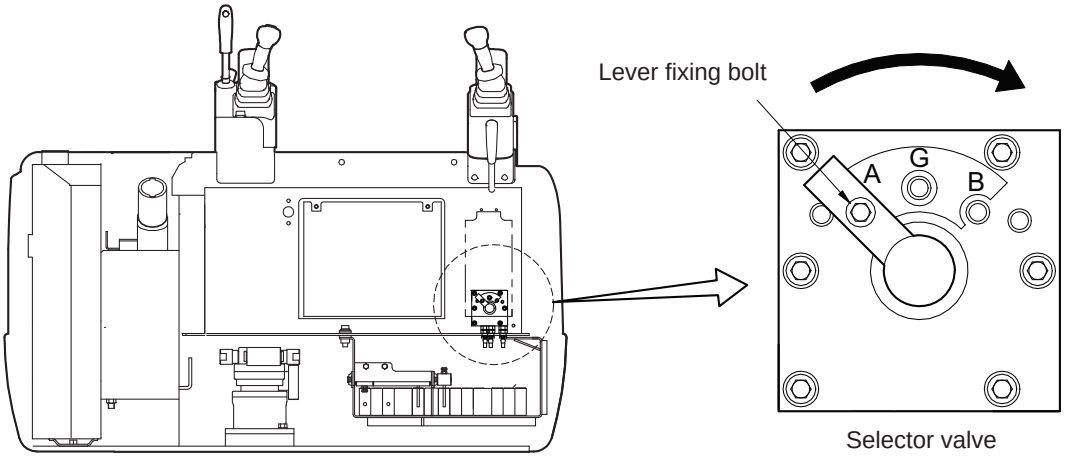

WC-C200520

1. The selector valve is inside the front left cover.
2. Remove the bolt that fixes the selector valve lever. Set the lever to the intended position.
3. Fix the selector valve lever with the bolt after changing the operation mode.

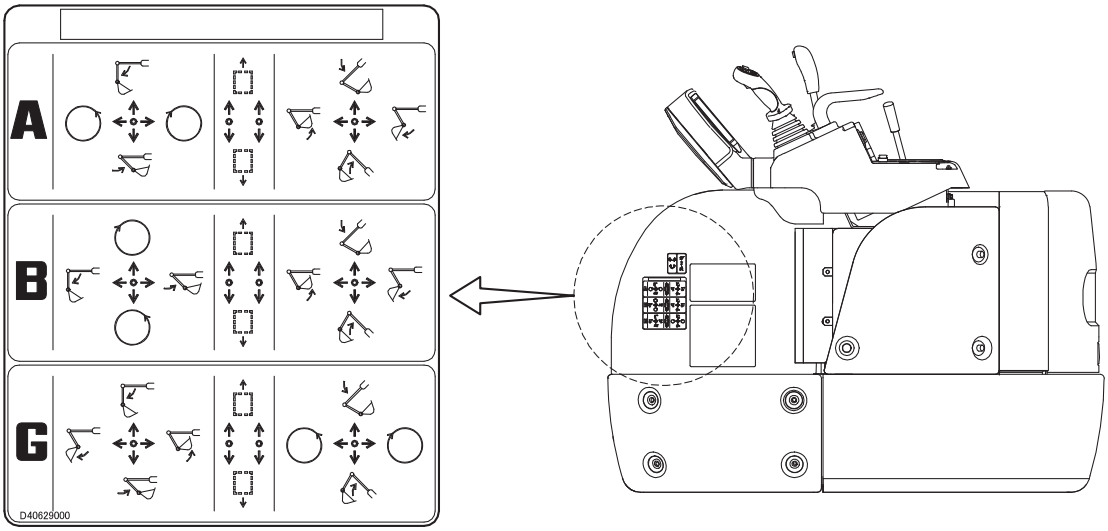

Operation mode plate (patterns A, B, G)

WC-C200530

WARNING

- Set the gate lock lever to the lock position before changing the operation mode.
- Check the action of each operation lever and movement of the machine before starting work in order to prevent accidents, which may result in injury or death, due to improper operations.
- Carry out minute operation and make sure that the operation mode has been changed properly after changing it.

https://truckmanualshub.com/

ABCD Multi-selection Method (for Machine with ABCD Selector Valve)

Four operation patterns A, B, C and D can be changed with the selector valve.

Lower the attachment onto the ground and stop the engine before changing the operation mode.

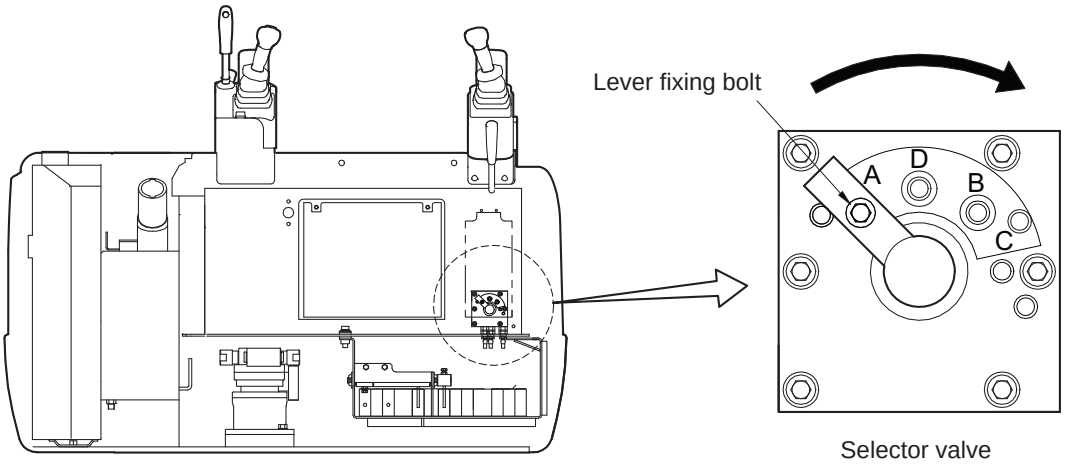

WC-C200540

1. The selector valve is inside the front left cover.
2. Remove the bolt that fixes the selector valve lever. Set the lever to the intended position.
3. Fix the selector valve lever with the bolt after changing the operation mode.

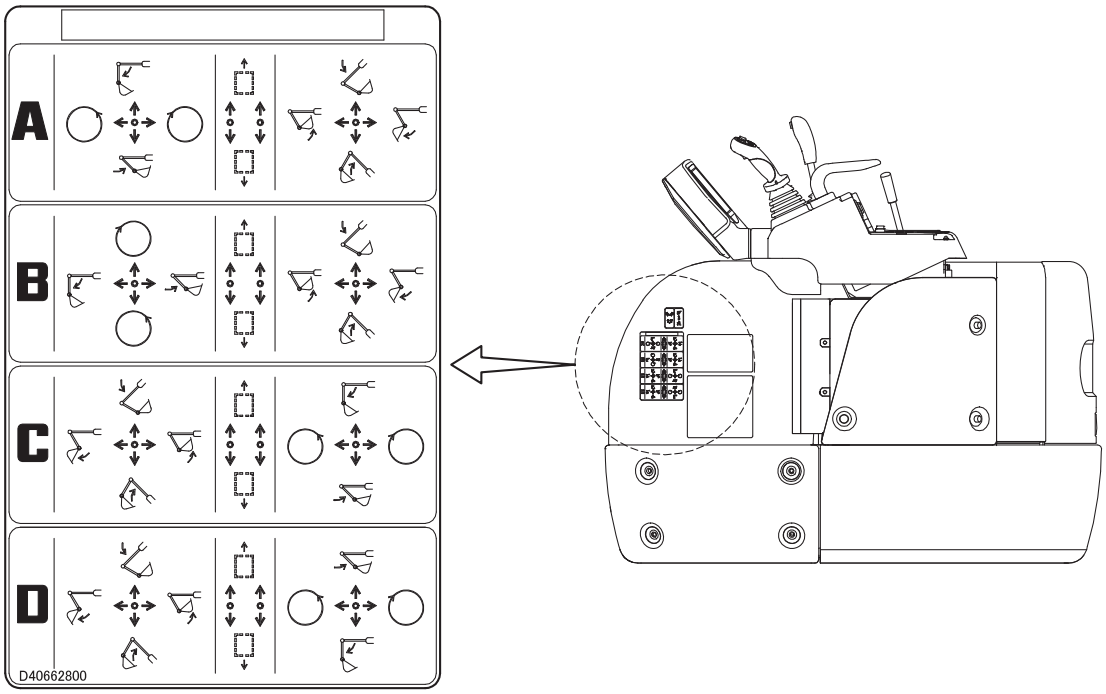

Operation mode plate (patterns A, B, C, D)

WC-C200550

WARNING

- Set the gate lock lever to the lock position before changing the operation mode.
- Check the action of each operation lever and movement of the machine before starting work in order to prevent accidents, which may result in injury or death, due to improper operations.
- Carry out minute operation and make sure that the operation mode has been changed properly after changing it.

https://truckmanualshub.com/

BLADE OPERATION

Move the blade lever forward or backward.

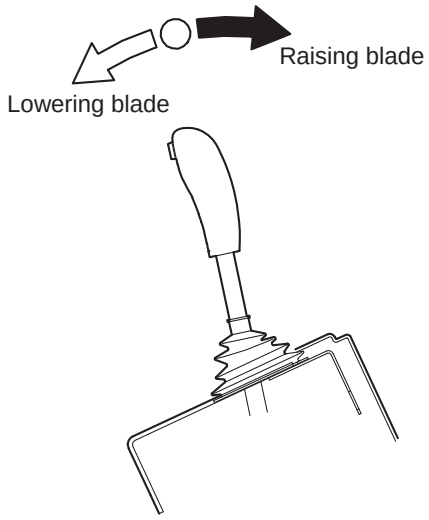

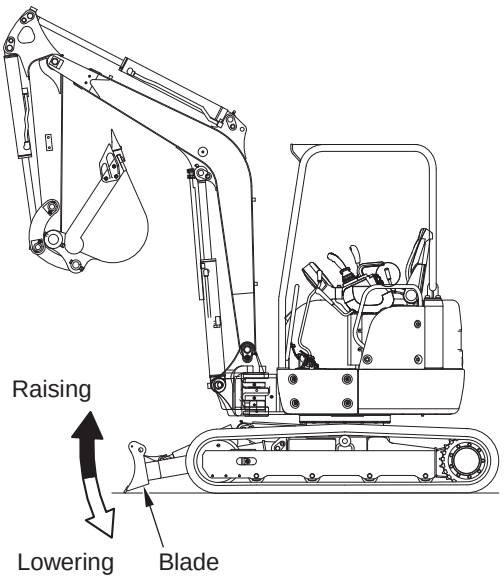

WC-C200560

BOOM SWING OPERATION

Set the pedal cover to the unlocked position before swinging the boom. Step on the right or left side of the boom swing pedal to swing the boom.

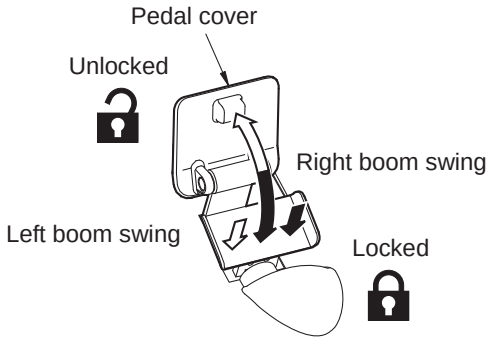

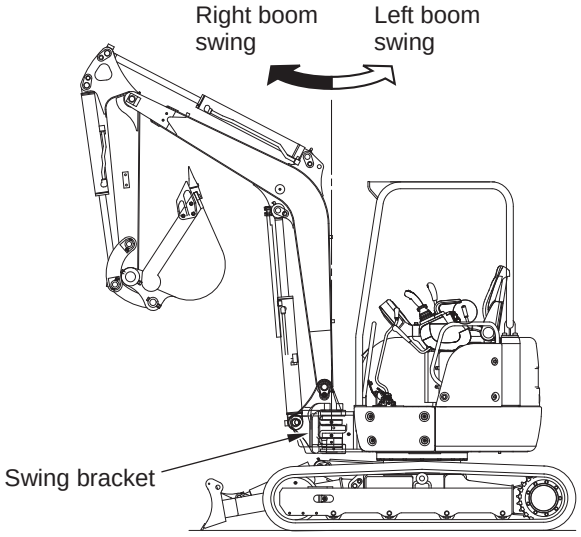

WC-C200570

⚠ CAUTION

Put the pedal cover on the pedal and lock it when boom swing is not carried out.

https://truckmanualshub.com/

SWING OPERATION

Use the left operation lever to swing.
Turn the lever to the right to swing to the right.
Turn the lever to the left to swing to the left.
Return the lever to the neutral position to stop swinging.

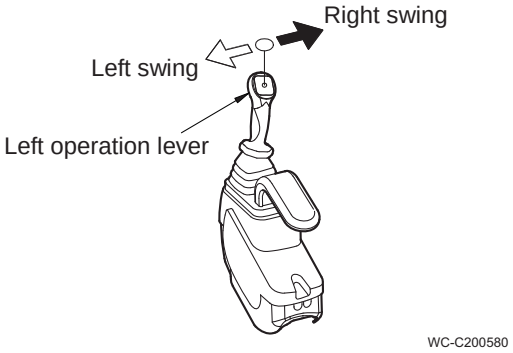

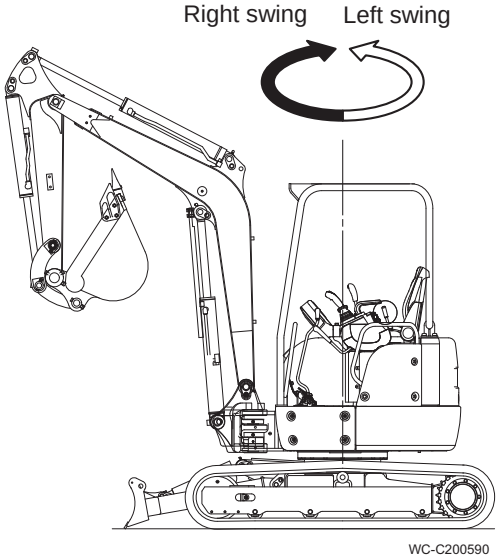

⚠ WARNING

Do not let any persons enter the swinging operation range.
Check the safety around the machine before swinging.

https://truckmanualshub.com/

TRAVELING

Starting, Traveling and Stopping

⚠ WARNING

- If forward movement and backward movement are mistaken in operation with the travel lever, serious accidents may result.
- Check the blade position before traveling. If the blade is behind the machine, operations of the travel levers are reversed.
- Make sure that there are no people around the machine and turn on the horn before starting.

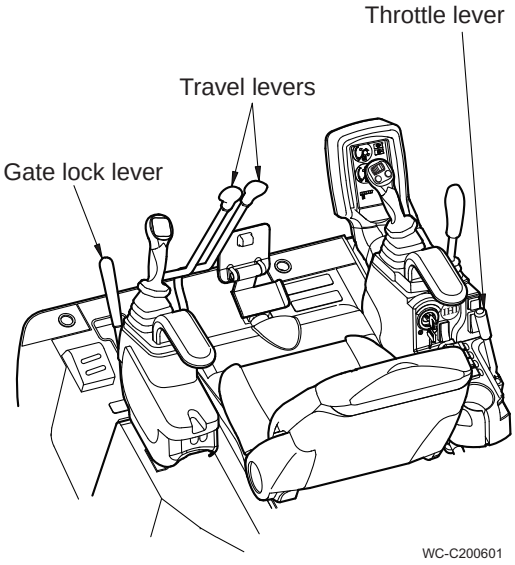

1. Pull the throttle lever to raise the engine speed to the proper speed to traveling.
2. Lower the gate lock lever to unlock it.
3. Raise the bucket and blade to certain height that allow smooth traveling without hitting them.
4. Operate the right and left travel levers as shown below.

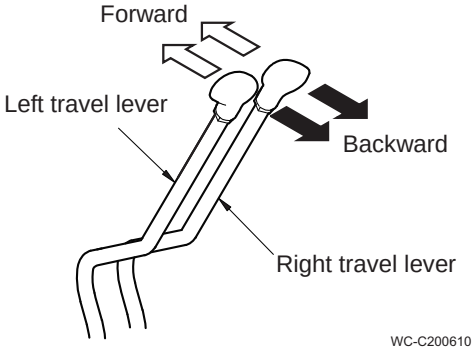

• Forward

Push both travel levers forward to move the machine forward.

(The machine always moves toward the blade when the travel levers are pushed forward.)

• Backward

Pull back both travel levers to move the machine backward.

(The machine always moves toward the sprocket when the travel levers are pulled back.)

The traveling speed of the machine can be controlled by the amount of turning the travel levers.)

• Stopping

Set both travel levers to the neutral positions to stop the machine. When the machine stops, the parking brake is applied automatically.

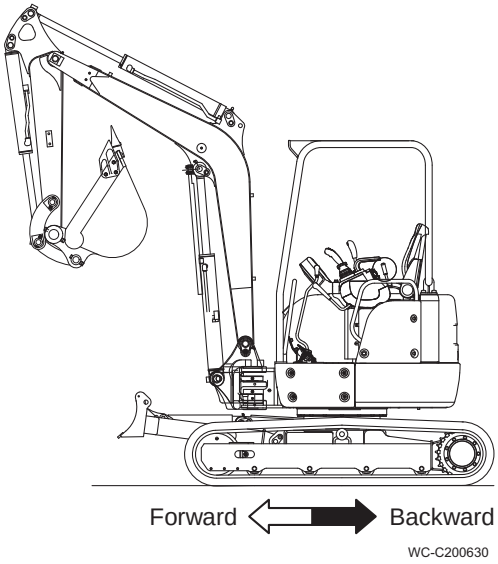

https://truckmanualshub.com/

Changing Direction

Turning during traveling

Return the travel lever toward the neutral position a little to change the direction during forward (or backward) traveling.
When the lever of the intended turning direction is returned a little, the machine turns slowly in that direction.

Pivot turning (when blade is in front of machine)

Drive a single crawler to change the direction.

1. Pivot turn to the left
   Push the right travel lever (1) to turn the machine forward. Pull it back to turn the machine backward.

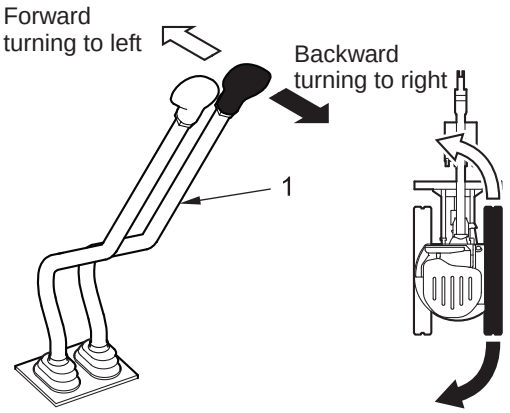

Pivot turn to left

WC-C200640

2. Pivot turn to the right
   Use the left travel lever (2) in the same way.

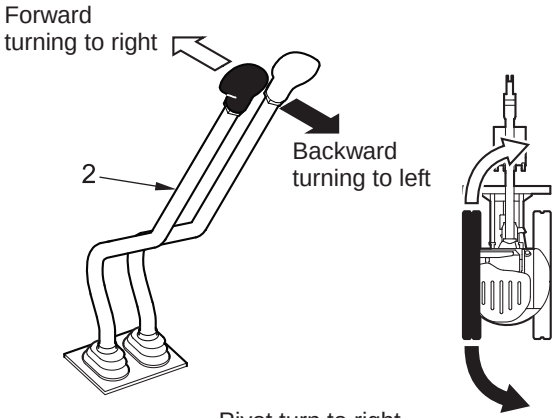

Pivot turn to right

WC-C200650

Spin turning (when blade is in front of machine)

Drive the right and left crawlers in the reverse directions to change the direction without traveling the machine.

1. Spin turning to the left
   Push the right travel lever forward and pull back the left lever.
2. Spin turning to the right
   Pull back the right travel lever and push the left lever forward.

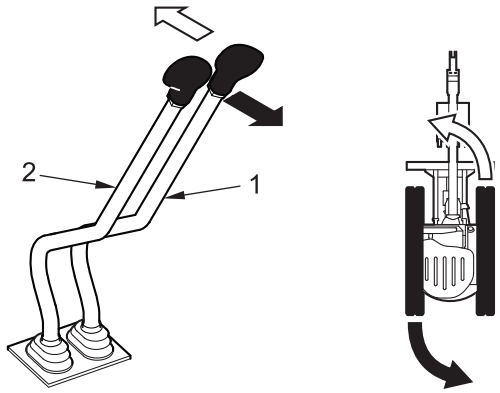

Spin turning

WC-C200660

https://truckmanualshub.com/

High speed Traveling

Push the travel speed select switch (1) of the blade lever to change the travel speed into the high speed. Push it again to change the high speed into the low speed.

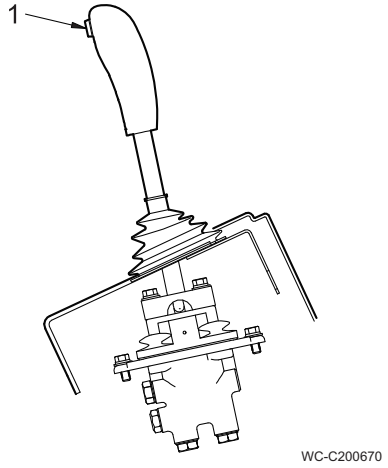

⚠ WARNING

Do not change the travel speed into the high speed while unloading from a truck or traveling down a slope. It is very dangerous if the travel speed changes during traveling.

Precautions While Traveling on Slope

1. The gradeability of this machine is 30º (58%).
2. Travel up or down a slope at the low speed.
3. Travel up a 15º or more slope in the posture shown on the right.
4. Reduce the engine speed and operate the travel levers slowly when traveling down a 15º or more slope.
   Move down the slope in the forward traveling posture as shown on the right.
   Lower the bucket onto the ground to stabilize the machine if it becomes unstable.

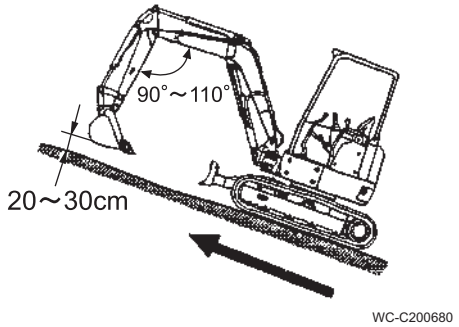

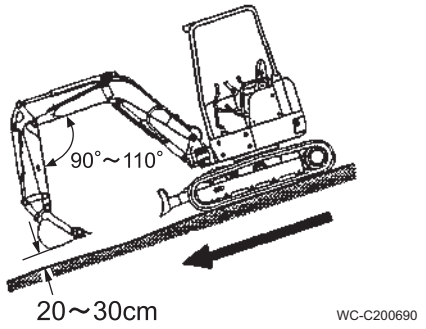

⚠ WARNING

- Do not change the direction on a slope. Otherwise, the machine may slide sideways.
- When the machine moves across a slope, it may slide sideways. Move down the slope onto a flat ground, turn the machine, and travel safely.
- Do not travel on a 30º or more slope.

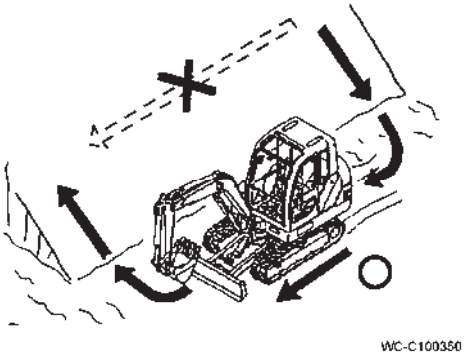

https://truckmanualshub.com/

WORK INSTRUCTIONS

Digging

The digging force of the arm cylinder is maximized when the angle between the arm cylinder and arm is 90 degrees.
The digging force of the bucket cylinder is maximized when the angle between the bucket cylinder and the arm link is the same as the angle between the arm link and bucket link.
Improve the digging work efficiency, making use of these angles properly.
In digging, pull the arm to dig with the bucket.
Raise and lower the boom to adjust the depth.

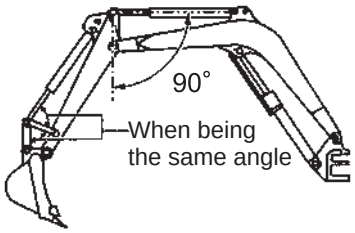

WC-C200700

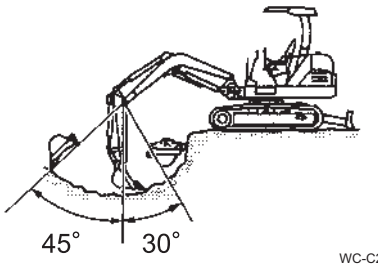

WC-C200710

Ditching

Place the machine along the ditch direction and travel it backward with the progress of ditching.

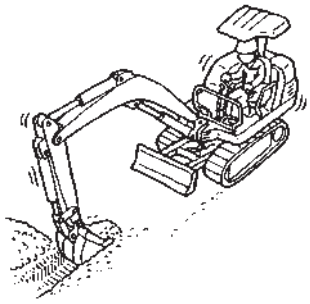

WC-C200720

Loading

After digging, raise the boom, swing and load soil onto the dump truck.

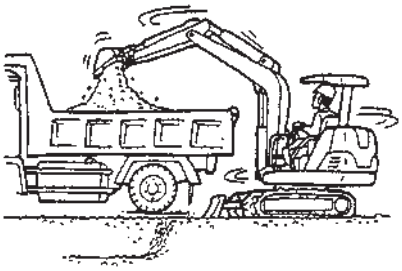

WC-C200730

Gutter Digging

It is possible to dig gutters in narrow spaces by swinging the boom.

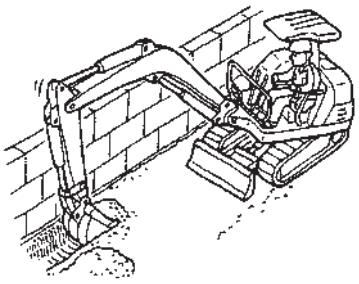

WC-C200740

https://truckmanualshub.com/

PRECAUTIONS FOR WORKS

Never stop swinging by hitting

Never stop swinging by hitting or pressing the bucket against the wall of the ditch. Otherwise, strong impacts are applied to the machine and the service life is shortened.

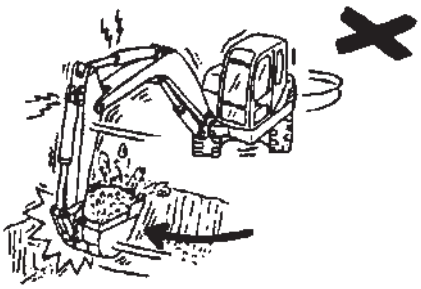

WC-C200770

Never sweep with the bucket

Avoid sweeping the bucket like a broom in order to level off ahead of machine. This causes side strains and wear on the boom, arm, and bucket.

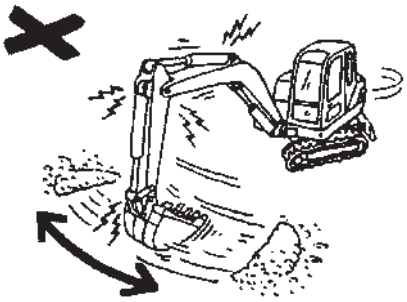

WC-C200780

Precautions for works at the cylinder stroke end

At the stroke end of the cylinder, the bucket moves faster. Thus, operate the bucket slowly with care not to allow soil and sand to drop.
When the cylinder is moved to the stroke end, large forces are applied to the cylinder piston and the service life is shortened. Give some margins to the cylinder in works.

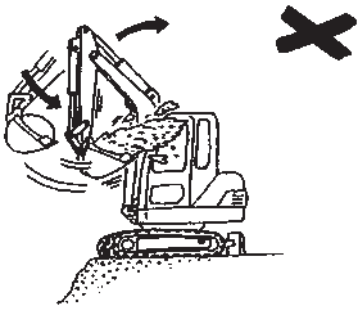

WC-C200790

Hammering is prohibited

Never use the bucket instead of picks or for hammering or piling. Otherwise, excessive forces are applied to the machine, resulting in dangerous accidents.

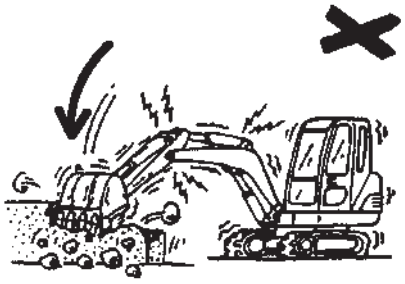

WC-C200800

Do not overload to cylinder

Do not forcefully conduct digging operation beyond the capacity, which may overload any cylinder and open its relief valves. This causes damage to the hydraulic system and machine.

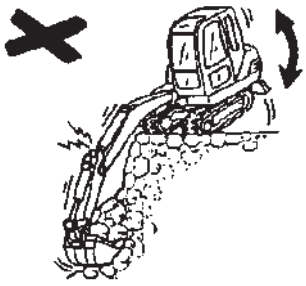

WC-C200810

https://truckmanualshub.com/

Do not crawl with the bucket

Do not drag the bucket on the ground by crawling. Level the ground with proper equipments in a correct way.

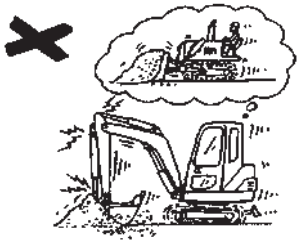

WC-C200820

Bring both sides of the blade into contact with the ground

Bring both sides of the blade into firm contact with the flat ground when using the blade as a stabilizing plate in digging work.

If a single side of the blade contacts the ground, the blade may be damaged.

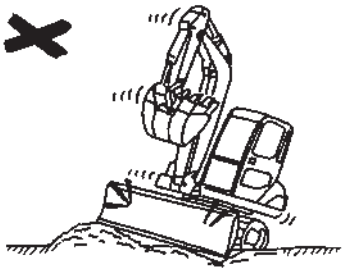

WC-C200830

Pay attention to the blade when digging deep ditches

The cylinder may hit against the blade. Thus, the boom cylinder may contact with the blade when digging a deep ditch.

Be very careful in operation.

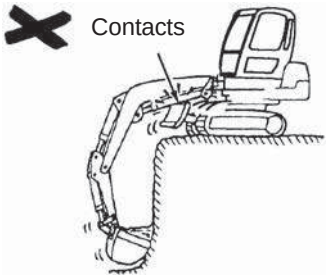

WC-C200840

Works in damp grounds

Place mats or the like to protect the footing in advance when carrying out works in damp grounds or muddy places.

Drive the machine with great care not to enter muddy places.

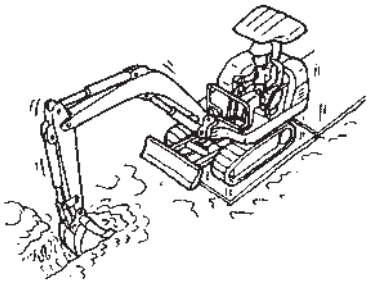

WC-C200850

https://truckmanualshub.com/

Escape from a muddy place

If a single side enters a muddy place, lower the bucket onto that muddy ground to lift the crawler, place logs, wood. under the crawler and escape from that place.

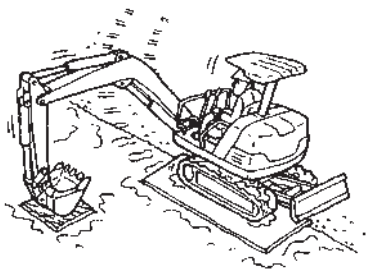

WC-C200860

If both sides enter a muddy place and the machine cannot be driven, place logs or wood under crawlers one by one in the same way as shown above, bite the front ground with the bucket, pull the arm in the same way as digging to move the machine, and escape from that place.

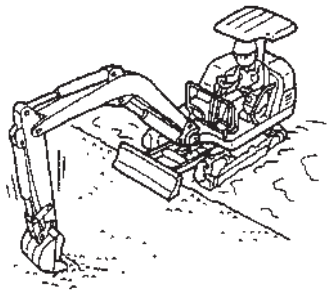

WC-C200870

Works in water

- The allowable water depth is up to the center of the upper roller or the top of the slide pad.
  Check the water depth and ground before working in water or traveling the machine across the river. Do not go into water deeper than the allowable water depth.
  The machine may sink little by little if the ground is soft. Pay great attention to the footing in work.
  If the bucket is dipped in water for long, grease the pins around the bucket sufficiently until used grease oozes out.
- The engine may get wet with water and the radiator fan may be broken if the machine climbs a steep slope when going out of water. Be very careful.

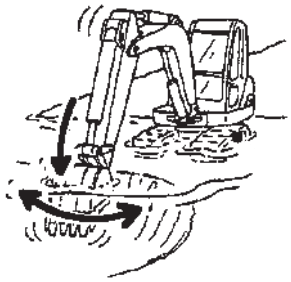

WC-C200880

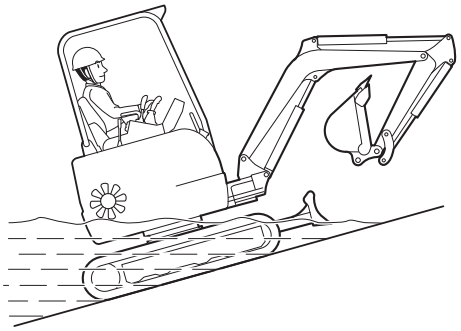

WC-C200140

Countermeasures if the machine is buried up to the super structure

If the machine is buried with water, soil or sand up to the super structure by mistake the swing bearing may wear abnormally. It is necessary to change grease in the turning structure or overhaul and repair the turning structure immediately. Stop operation and ask greasing, overhaul or repair works from the nearest service office.

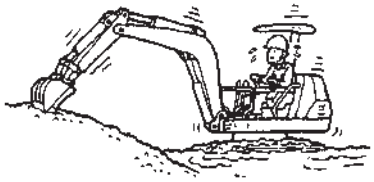

WC-C200890

https://truckmanualshub.com/

PRECAUTION ON USE OF RUBBER SHOE

The rubber shoe may be damaged or worn faster depending on working conditions. Be sure to observe the prohibitions and instructions shown below.

Structure of Rubber Shoe

As shown in the figure to the right, the rubber shoe consists of steel cord to sustain tension, iron core to support it, and covering rubber to them.

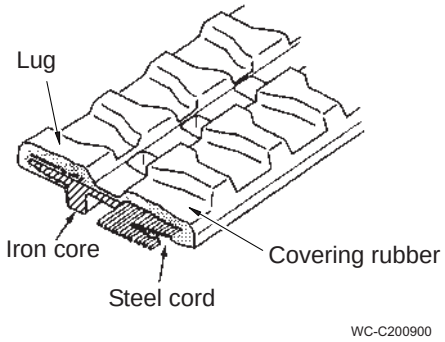

NOTICE
If a crack reaches the steel cord, it may be rusted and cut off by moisture. When any crack is detected, immediate repair is essential. Please contact your local IHI distributor.

Cautions while working and traveling

Do not travel or work on rocky site

This causes damage of the lug and breakage of the steel cord.

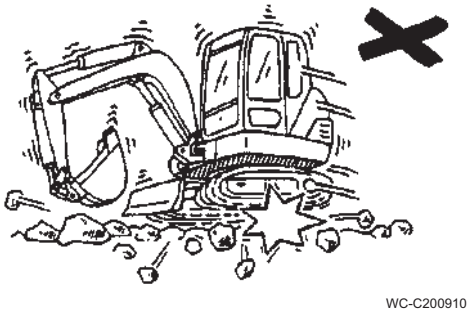

Do not travel or work on riverbed

This causes damage and slipping off of the shoe.

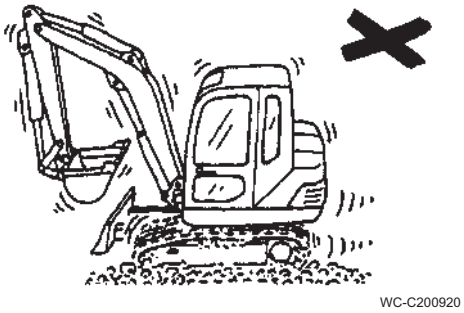

https://truckmanualshub.com/

Do not travel or work on steel or scrap material
This causes damage of the lug and breakage of the steel cord.

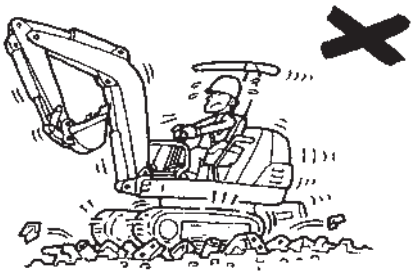

WC-C200930

Do not travel on large step
While traveling up the large step, do not change the course.
Otherwise, the shoes may be slipped off.

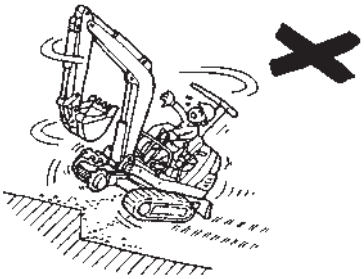

WC-C200940

Do not travel or work while spanning a ditch
This causes damage of the lug and breakage of the steel cord.

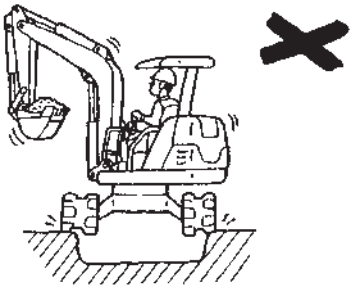

WC-C200950

Do not forcibly press soil while rubber shoes are slipping
Slipping of the rubber shoes promotes wear of the lugs.

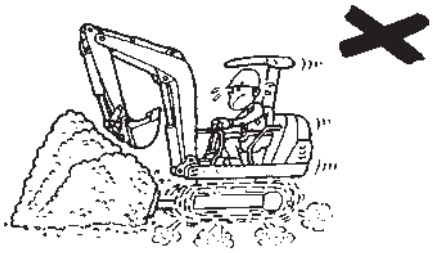

WC-C201010

Do not travel over high heat locations
Do not travel over place subjected to high heat such as bonfires or steel plate under scorching heat.
This causes serious abrasion or damage and breakage of the lug.

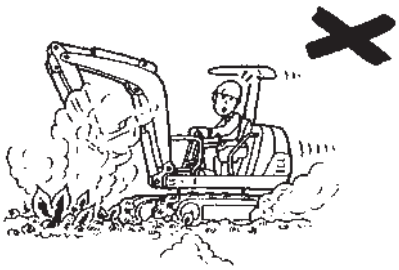

WC-C201020

https://truckmanualshub.com/

Do not hit the bucket

Be careful not to damage the rubber shoes with the bucket.

Otherwise, the iron cores may be broken or the steel cords may be cut off.

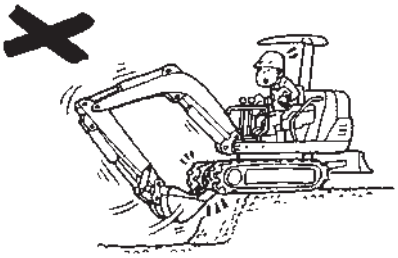

WC-C201030

Do not let oil, solvents and salt adhere to the rubber shoes

- If fuel, hydraulic oil and paint should adhere to the rubber shoes, wipe it away quickly.
- Wash away with water after working in locations with a large salt content. Salt can cause the iron core to rust or peel.

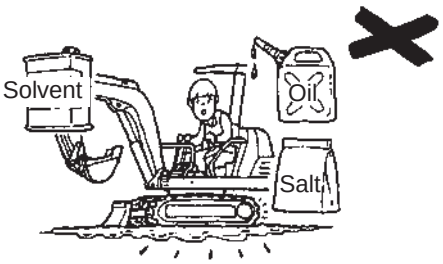

WC-C201050

Always keep proper tension on the shoe

If the rubber shoe is slack, it may damage the rubber shoe or cause them to come off the rollers.

This causes damage and slipping off of the shoe.

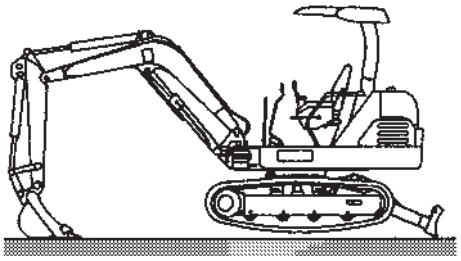

WC-C201060

https://truckmanualshub.com/

PTO (POWER TAKE-OFF) WHEN USING SPECIAL ATTACHMENT

It is possible to provide the machine with two spare pipe systems as the PTO hydraulic power for the special attachment.

NOTICE

- Select the proper special attachments such as hydraulic breakers, iron forks, special hydraulic devices and so forth that fit the capability of this machine.
- Some special attachments require reinforcement of the arm. Inquire our dealer about reinforcement.
- Be sure to read the manuals issued by the manufacturers and have good understanding before using special attachments.
- When a special attachment is attached to the machine, the stability, transport dimensions, etc. of the machine may change. Be careful.

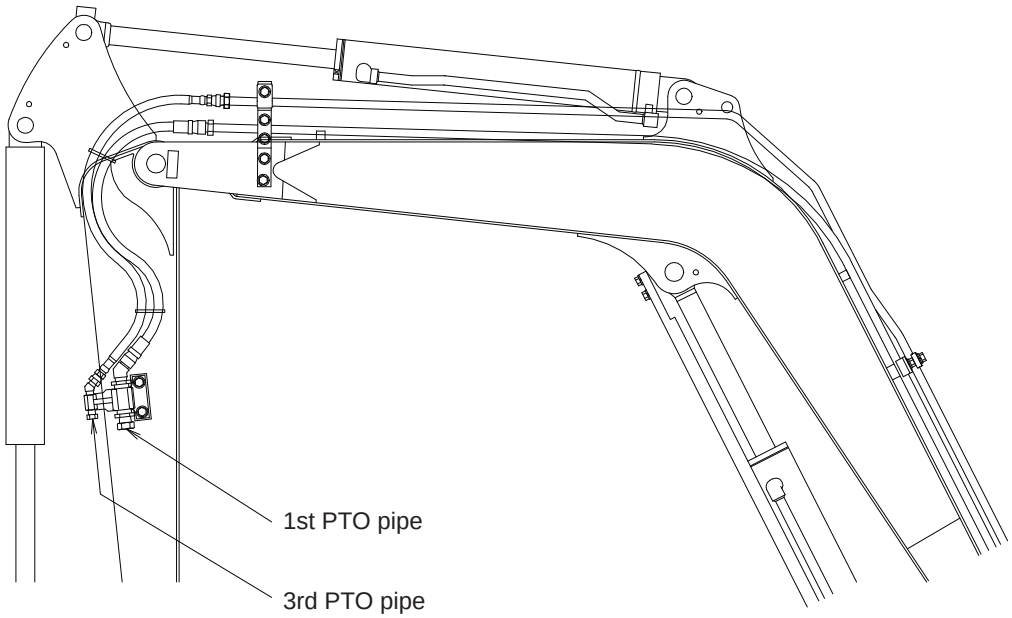

https://truckmanualshub.com/

1st PTO

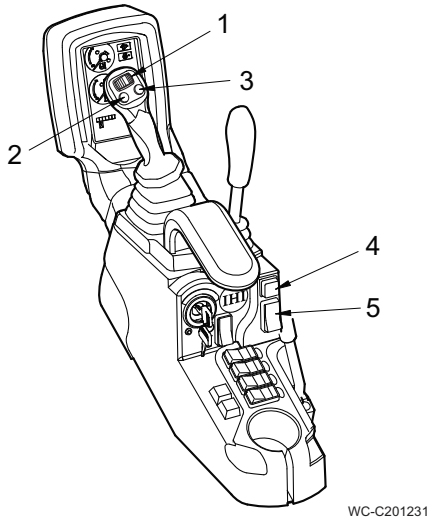

Names of Switches and Applicable Works

No.	Name	Work	
		Breaker	Iron fork
1	1st PTO slide switch	○	○
2	1st PTO left output switch	○	○
3	1st PTO right output switch	-	○
4	1st PTO hold switch	○	-
5	1st PTO slow mode switch	-	○

Be sure to set the hold switch and slow mode switch to the OFF positions when they are not used.

When Using Breaker

1. Connect the supply hose to the pipe on the left of the arm. Connect the return hose to the pipe on the right of the machine.
2. Set the mark (6) of the selector valve vertically.
3. Press the left output switch (2) to move the breaker. It is also possible to move the breaker by sliding the slide switch (1) to the left.
4. Release your finger from the switch to stop the breaker.
5. Use the hold switch (4) to supply pressurized oil continuously, etc.

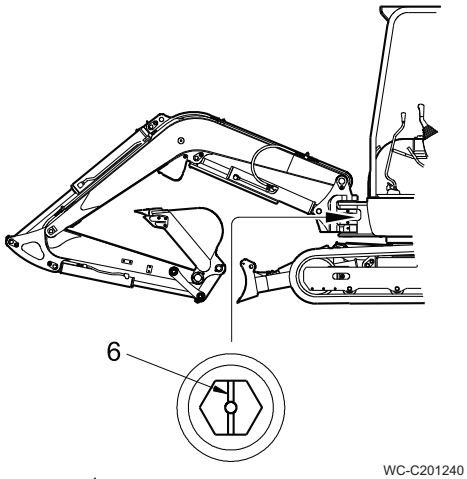

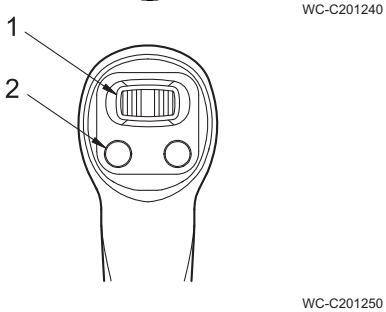

NOTICE
Be sure to set the mark on the selector valve as described above. If it is set improperly, the machine and/or breaker may be damaged.

https://truckmanualshub.com/

When Using Iron Fork

1. Connect the hoses to the pipes on the right and left of the arm.

2. Set the mark (6) of the selector valve horizontally.

3. Slide the slide switch (1) to the right or left to operate the iron fork.
   Sliding to the left: Pressurized oil is supplied to the left pipe of the arm.
   Sliding to the right: Pressurized oil is supplied to the right pipe of the arm.
   The flow rate changes according to the amount of sliding.

   It is also possible to press the right and left buttons (2) and (3) to operate the iron fork.
   Pressing the left button: Pressurized oil is supplied to the left pipe of the arm.
   Pressing the right button: Pressurized oil is supplied to the right pipe of the arm.

4. How to carry out slow operation
   Press the ON side of the slow mode switch (5).
   Slide the slide switch slowly.

   Slow mode switch
   Pressing the ON: The supply flow rate of oil supplied to the pipe is reduced.
   Pressing the OFF: The supply flow rate of oil supplied to the pipe is restored.

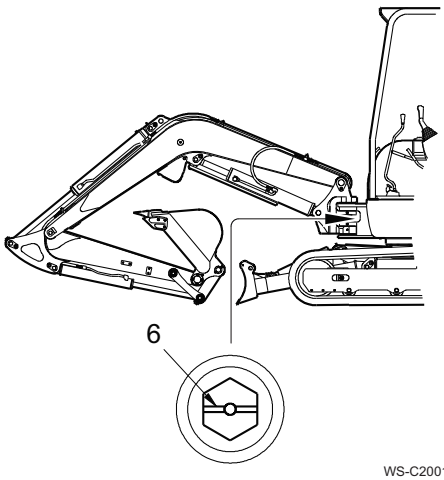

WS-C200170

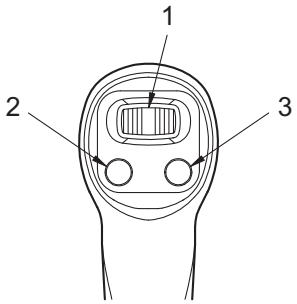

WS-C200180

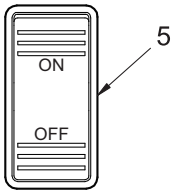

WC-C201280

NOTICE
Be sure to set the mark on the selector valve as described above. If it is set improperly, pressurized oil is not supplied to the pipe on the right of the arm.

https://truckmanualshub.com/

3rd PTO

Use the 3rd PTO hydraulic power for the detachable quick hitching device such as a bucket.

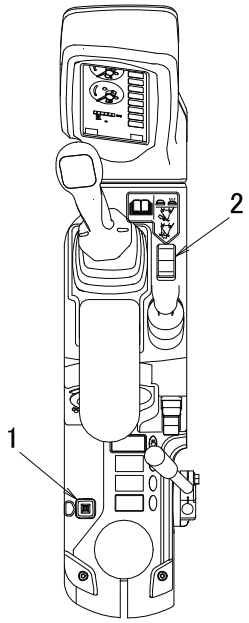

1. Connect the bucket releasing hose of the quick hitching device to the 3rd PTO pipe on the right of the arm.
   Connect the bucket grasping hose of the quick hitching device to the 3rd PTO pipe on the left of the arm.
2. Turn on the 3rd PTO power switch (1).
   3rd PTO power switch
   ON: Once the switch is pushed, it is depressed, the switch lamp goes on, and the buzzer sounds.
   OFF: When the switch is pushed again, it is pushed back, the switch lamp goes out, and the buzzer stops.
3. Operate the quick hitching device with the 3rd PTO operation switch (2).
   3rd PTO operation switch
   Pushing the FREE position: Pressure oil is supplied to the pipe on the right of the arm and the quick hitching device releases the bucket.
   Pushing the LOCK position: Pressure oil is supplied to the pipe on the left of the arm and the quick hitching device grasps the bucket.
4. Be sure to set the 3rd PTO operation switch to the LOCK position after operating the quick hitching device, now matter how the bucket is released or grasped.
5. Turn off the 3rd PTO power switch (1). The switch lamp goes out and the buzzer stops.

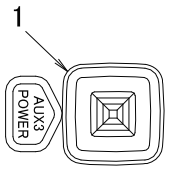

3rd PTO power switch

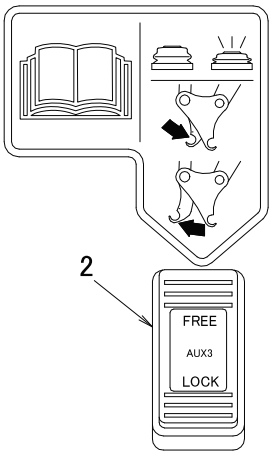

3rd PTO operation switch

⚠ WARNING

- Do not touch the 3rd PTO power switch or 3rd PTO operation switch if the quick hitching device is not used. If you touch the switch by mistake, the quick hitching device may move during work and release the bucket.
- Keep the 3rd PTO operation switch at the LOCK position all the time when the quick hitching device is not used.
- If 3rd PTO power switch is turned on by mistake and the buzzer sounds, turn it off immediately.

https://truckmanualshub.com/

TOWING

⚠ CAUTION

- It is very dangerous if the wire rope is disentangled during towing. Do not stand between the towing machine and the towed machine.
- Use wire ropes and shackles for towing that are strong enough for the towing weight.
- The machine is provided with a pulling hook at the back of the lower frame to pull light objects. Never pull the machine itself or other heavy objects using this pulling hook.

Towing the machine or heavy objects

Apply a wire rope to the rear frame and pull the machine by another machine if it enters a muddy place and cannot escape from it by itself.
Never use the pulling hook for light objects to pull the machine itself.

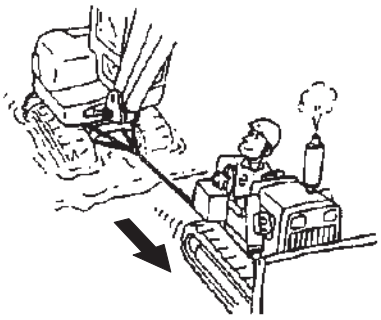
WC-C100290

1. Start the engine.
2. Select the low speed mode with the travel speed select switch.
3. Move the travel lever in the travel direction slowly when towing starts.

NOTICE

Put a patch at the corner in contact with the wire rope to prevent the wire rope from being damaged.

NOTICE

When the engine is defective and does not start, the crawler shoes do not rotate and pulling is disabled.

Pulling light objects

Apply a wire rope to the pulling hook at the back of the lower frame using a shackle.

NOTICE

- The maximum pulling load should be 500 kg or less.
- Do not pull diagonally.

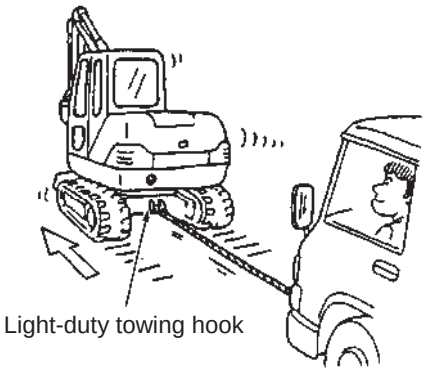

WC-C100310

https://truckmanualshub.com/

TRANSPORT

Observe the loading and unloading methods and the anchoring method for transportation as well as the laws and regulations concerned when transporting the machine.

Loading and Unloading the Machine

⚠ WARNING

- Carry out operation on a flat and firm ground.
- Set the travel speed select switch to the low speed mode and load or unloading the machine at low engine speed.
- Be sure to use ramp boards or loading platform for loading and unloading. Never use the attachment to load or unload the machine. It is very dangerous.
- Use wide, long and thick enough ramp board that ensures safe loading and unloading.
- Remove mud from the crawlers and grease, oil, water and other adhered matters from the ramp boards to prevent slipping.
- Never change the direction on the ramp boards. It is very dangerous. Move down from the ramp boards once and change the direction.
- The center of gravity moves quickly at the border of the truck and the ramp boards. Travel the machine slowly.
- Warm up the machine sufficiently before loading or unloading it in cold seasons.

1. Apply the brake of the truck securely. Apply blocks to the tires to fix the tires.
2. Adjust the center line of the machine to the center line of the truck. Adjust the ramps boards to the crawler width.
3. The angle of the ramp boards should be 15° or less.
4. Load the machine from the front if it has an attachment. Load it from the rear if no attachment is mounted.
5. Adjust the machine to the ramp board direction, raise the blade and travel the machine slowly with care not to hit the attachment against the truck.
6. Load the machine properly in the designated position on the truck.

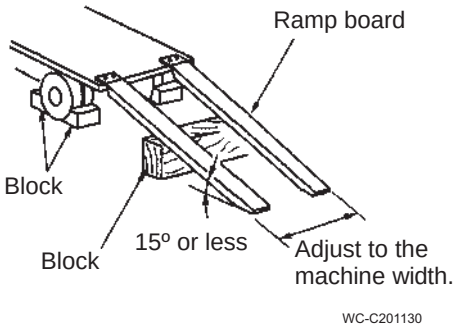

https://truckmanualshub.com/

Fixation at Transport

⚠ WARNING

If the machine falls down during transportation, it can cause personal injury or death.
Fix the machine firmly on the platform of the truck with wheel blocks and wire ropes.

1. Lower the blade onto the platform of the truck.
2. Fold the arm and bucket fully. Lower the attachment onto a wooden block, etc.
3. Stop the engine and pull out the key from the engine key switch.
4. Apply stopper blocks to the front and rear positions of the crawlers.
5. Apply wires to the crawler frame and bucket and fasten them to the platform of the truck.

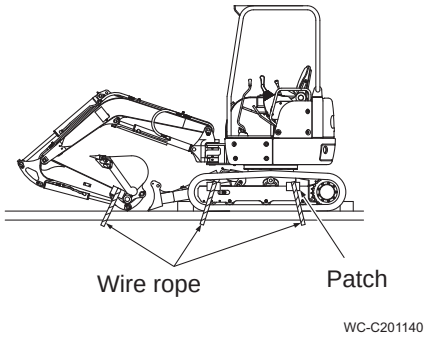

NOTICE

If wire ropes are applied to the rubber shoes directly when fixing the machine, the rubber shoes may be damaged. Put patches on the front and rear positions of the crawler frame and fix with the wire ropes.

https://truckmanualshub.com/

LIFTING THE MACHINE

⚠ CAUTION

- Always lift the machine on a flat and firm ground.
- Never lift the machine loaded with any personnel.
- Make sure the lifting cables and other lifting devices are strong enough to support the machine.
- Do not perform crane operation including slinging work unless you are not qualified.

1. Set the blade at the rear position.
2. Raise the blade to the highest position.
3. Raise the boom to the highest position and fold the arm and bucket fully.
4. Make the boom straight if it has swung to the right or left.
5. Fasten wire ropes to the lifting holes at the back of the boom using the shackle.
6. Stop the engine and get off the machine.
7. Fasten the wire ropes to the lifting holes at both ends of the blade using shackles.
8. Apply the wire ropes from the boom and blade to the hook of the crane. Apply patches to the positions where the wires contact with the machine when tensioning the wires.
9. Lift the machine slowly until it is lifted slightly apart from the ground, stop lifting once, check the machine balance, and lift the machine to the intended height.

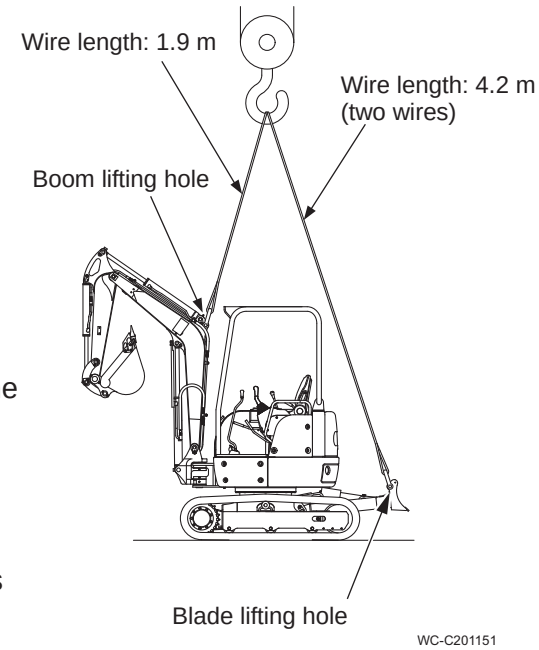

https://truckmanualshub.com/

MAINTENANCE

Proper maintenance is needed to maintain the machine performances for long and prevent damages and troubles in advance.
This section describes the proper maintenance procedures of this machine. Carry out maintenance safely and properly in accordance with the instructions described below.

https://truckmanualshub.com/

PERIODIC REPLACEMENT OF THE IMPORTANT PARTS

Replace the following parts, which are related to the safety and a fire, periodically.
These parts are subject to aged deterioration and wear, and it is hard to judge the service life by means of appearance inspection. Replace them periodically even though they have no apparent defects, in particular.

Type	Parts to be replaced periodically	Qty	Replacement interval
Fuel hose	Fuel tank - Water separator	1	Every 2 years
	Water separator - Fuel pump	1	
	Fuel pump - Fuel filter	1	
	Fuel filter - Fuel tank	1	
Coolant hose	Radiator hose (upper)	1	Every 2 years
	Radiator hose (lower)	1	
	Radiator - Sub tank	1	
Hydraulic hose	Hydraulic pump - Control valve	3	Every 2 years
	C/V - Boom cylinder	4	
	C/V - Arm cylinder	4	
	C/V - Bucket cylinder	4	
	C/V - Boom swing cylinder	2	
	C/V - Blade cylinder	6	
	C/V - Swing motor	2	
	C/V - Travel motor	8	

Repair or replace these parts immediately if some abnormalities or defects are found in them even before the replacement interval.
Also check the fuel hoses, cooling water hoses and hydraulic hoses in daily check, monthly check and yearly check.

https://truckmanualshub.com/

MAINTENANCE INTERVALS

Periodic maintenance is most important to operate the machine safely and demonstrate its performances fully.

Take special care when using the machine under severe condition.

Δ: Check. ○: Replace.

	Maintenance point	Maintenance work	Maintenance interval								
			Daily	50h	150h	250h	500h	1000h	1500h	2000h	Irregular
Greasing	Attachment	Grease	See the LUBRICATE THE GREASE section for details.								
	Boom swing										
	Blade										
	Swing bearing										
	Ring gear										
Bucket	Bucket tooth	Replace		Δ							○
	Bucket	Replace		Δ							○
	Clearance	Adjust		Δ							
Crawler	Rubber shoe	Check wear & deterioration	Δ								○
	Shoe tension	Check and adjust									Δ
Reduction gear	Travel reduction gear	Check oil leak	Δ								
		Check oil qty & refill					Δ				
		Change oil			○ First time			○			

https://truckmanualshub.com/

	Maintenance point	Maintenance work	Maintenance interval								
			Daily	50h	150h	250h	500h	1000h	1500h	2000h	Irregular
Hydraulic system	Hydraulic oil tank	Check oil qty & refill	Δ								
		Drain water		Δ							
		Change hydraulic oil. Clean the tank						○			
	Suction strainer	Clean						Δ			
	Return filter	Replace cartridge		○ First time			○				
	Hydraulic devices	Check oil leak	Δ								
	Hydraulic equipment	Check oil leak	Δ								
Lubrication system	Engine oil	Check oil qty & refill	Δ								
		Change		○ First time		○					
	Oil filter	Replace		○ First time		○					
Fuel system	Fuel tank	Check oil qty & refill	Δ								
		Drain water				Δ					
	Water separator	Check	Δ								
		Clean Replace element					Δ				○
	Fuel filter	Replace					○				
	Fuel hose	Change								○	

https://truckmanualshub.com/

	Maintenance point	Maintenance work	Maintenance interval								
			Daily	50h	150h	250h	500h	1000h	1500h	2000h	Irregular
Cooling system	Sub tank	Check coolant qty & refill	Δ								
	Radiator	Clean						Δ			
		Change coolant						○			
	Radiator fins Oil cooler fins	Check & clean				Δ					
	Fan belt	Adjust tension		Δ First time		Δ					
		Check cracks	Δ								○
Intake system	Air cleaner	Check dust indicator	Δ								
		Check element & clean				Δ					
		Replace element					○				
Engine	Governor lever	Check & adjust	Δ			Δ					
	Intake valve & exhaust valve head	Adjust clearance						●			
	Fuel injection system	Check, clean & check functioning							●		
	Crank case breather	Check							●		
	Coolant path	Clean								●	
	Intake valve & exhaust valve seat	Lap								●	
Electric system	Fuse	Replace									○
	Fusible link	Replace									○
	Battery	Check battery liquid qty & refill		Δ							
		Clean terminals						Δ			
Bolt tightening		Retightening									Δ

●: Contact our dealer.

https://truckmanualshub.com/

RECOMMENDED LUBRICATION TABLE

Lubrication points	Oil type	Grade	Temp. & application (ºC) -30 -20 -10 0 10 20 30 40	Qty required
Engine oil pan	Engine oil	API-CD	* SAE10W-30 / SAE15W-40	H: 3.4 L L: 1.8 L
Hydraulic oil tank	Hydraulic oil	Abrasion-resistant	* ISO-VG46 / ISO-VG32	System: 43 L Tank level: 30 L
Travel reduction gear	Gear oil	API-GL-4	SAE90	0.5 L
Fuel tank	Diesel fuel	–		35 L
Cooling system	Coolant	–	Long-life coolant (LLC) added	Total qty: 4.0 L
Greasing	Grease	–	Lithium grease EP2	Proper qty

• The oil with the * marks is used for the machine before shipment.

https://truckmanualshub.com/

LUBRICATE THE GREASE

Attachment

1. Lower the attachment in the greasing posture onto the ground and stop the engine.
2. Fill grease using a grease gun through all grease nipples.
3. Wipe off old grease that oozes out of the grease nipples completely after greasing.

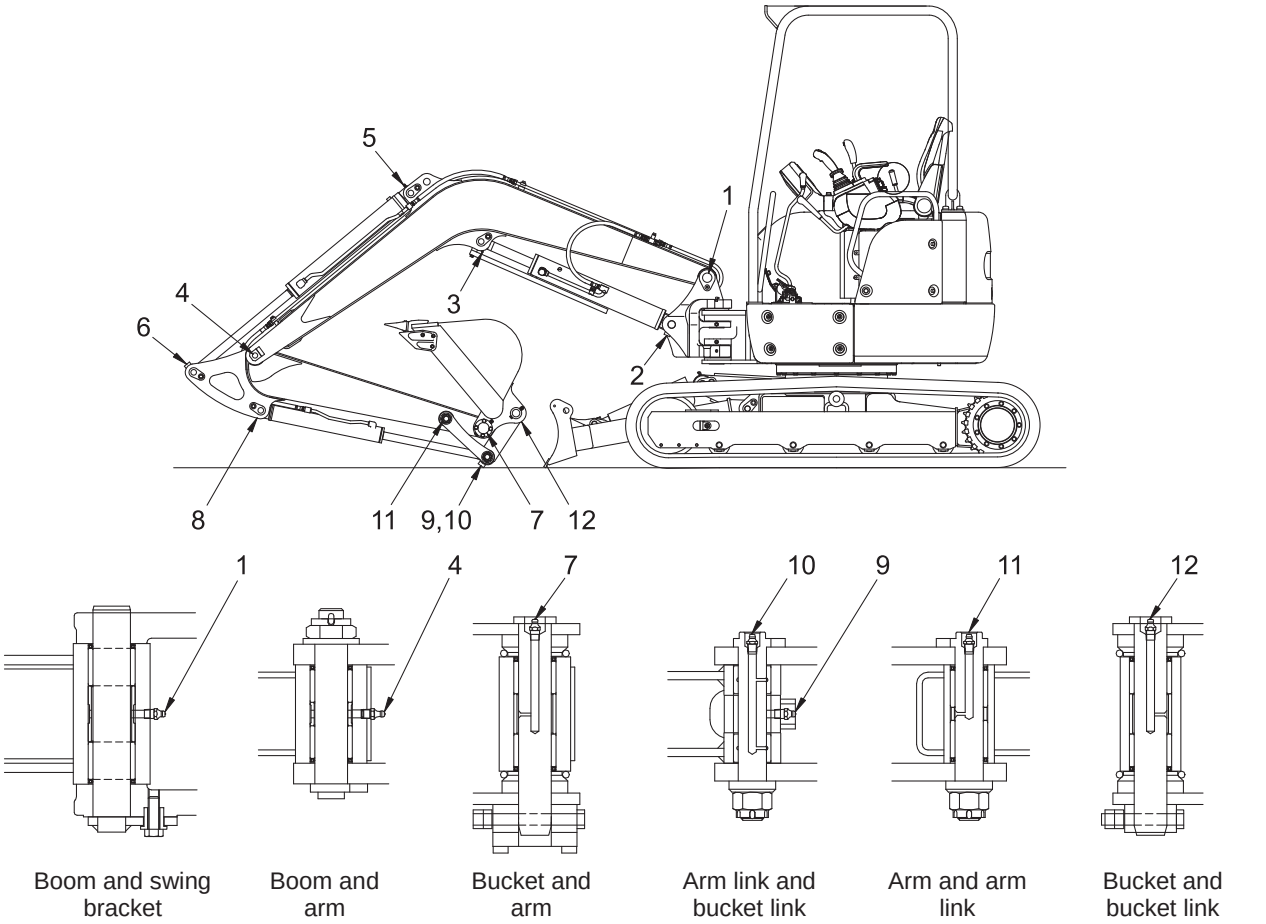

No.	Name	Qty	Greasing interval						
			Daily	50h	100h	250h	500h	1000h	2000h
1	Boom foot pin	1		○					
2	Boom cylinder foot pin	1		○					
3	Boom cylinder rod pin	1		○					
4	Arm foot pin	1		○					
5	Arm cylinder foot pin	1		○					
6	Arm cylinder rod pin	1		○					
7	Bucket pin	1		○					
8	Bucket cylinder foot pin	1		○					
9	Bucket cylinder rod pin	1		○					
10	Arm link and bucket link pin	1		○					
11	Arm link pin	1		○					
12	Bucket link pin	1		○					

https://truckmanualshub.com/

Boom Swing

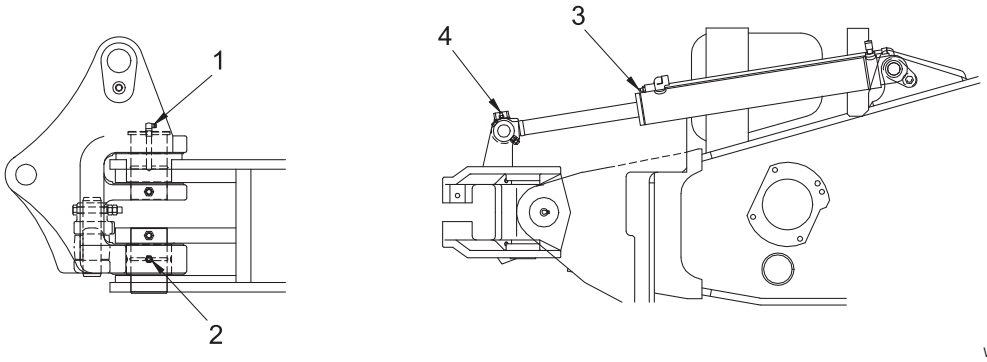

No.	Name	Qty	Greasing interval						
			Daily	50h	100h	250h	500h	1000h	2000h
1	Boom swing vertical shaft (upper)	1		○					
2	Boom swing vertical shaft (lower)	1		○					
3	Swing cylinder foot pin	1		○					
4	Swing cylinder rod pin	1		○					

Blade

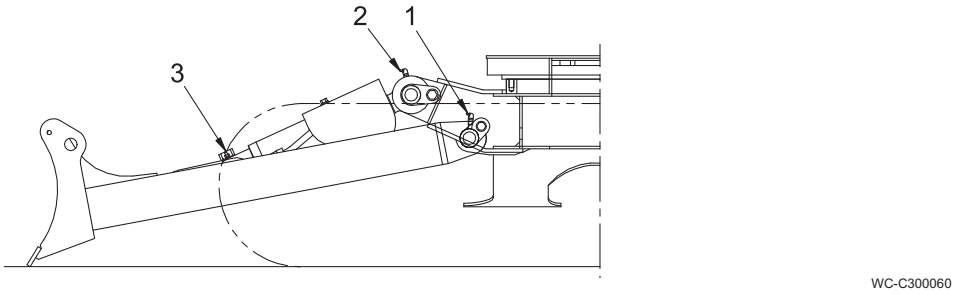

No.	Name	Qty	Greasing interval						
			Daily	50h	100h	250h	500h	1000h	2000h
1	Blade foot pin	2		○					
2	Blade cylinder rod pin	1		○					
3	Blade cylinder foot pin	1		○					

NOTICE

- Carry out greasing, regardless of the greasing interval, if abnormal noises are generated from a greasing point.
- Be sure to grease the pins around the bucket before starting in-water digging.

https://truckmanualshub.com/

Swing Bearing

1. Lower the bucket onto the ground and stop the engine.
2. Fill three to five strokes of grease using a grease gun into the grease nipple (1) on the front of the machine.
3. Fill grease every time the upper structure is swung by approximately 90 degrees until it swings by 360 degrees.

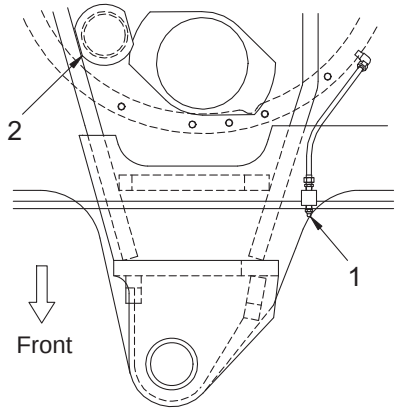

Upper structure

WS-C300040

Ring Gear

1. Lower the bucket onto the ground and stop the engine.
2. Remove the greasing cover (2) from the upper structure.
   Make sure that grease is sufficiently provided for the swing gear.
   If grease on the gear surface is insufficient, add grease (approximately 0.5 kg).
3. Change old grease with fresh grease completely if water or mud is mixed in grease and grease looks cloudy.
   Remove the cover (3) of the carbody and the discharge port cover (4) and discharge old grease when changing it.
4. Attach the discharge port cover and fill fresh grease through the greasing cover. (Total grease qty: 3.7 kg)
5. Swing two or three times, make sure that grease is spread over the ring gear, and attach the cover of the carbody and greasing cover.

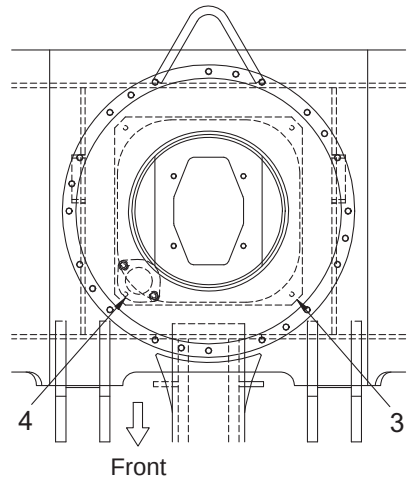

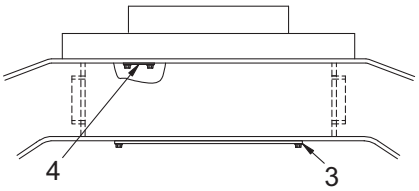

WS-C300050

Carbody

No.	Name	Qty	Greasing interval						
			Daily	50h	100h	250h	500h	1000h	2000h
1	Swing bearing	1		○					
2	Ring gear	1					○		

⚠ WARNING

If you carry out greasing while the machine is swinging, you may be caught by it. Do not swing the machine when greasing.

NOTICE

If greasing is carried out in the same position, grease is not spread all over the swing bearing. Be sure to swing the machine by approximately 90 degrees and grease the bearing at different points.

https://truckmanualshub.com/

MAINTENANCE OF BUCKET

Replace the tooth

⚠ CAUTION

- It is dangerous if the bucket moves when replacing the bucket tooth.
  Fix the bucket firmly, stop the engine, and set the gate lock lever to the lock position.
- Fragment may scatter, resulting in injury. Put on protective goggles, protective cap and protective gloves.

NOTICE

- Replace the tooth when the wear hole appears.
- Replace the tooth before it wears up to the adapter.

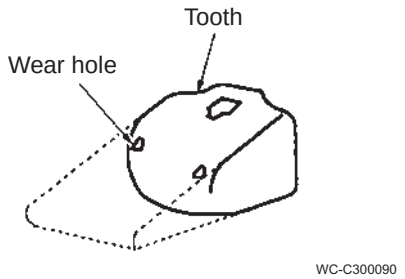

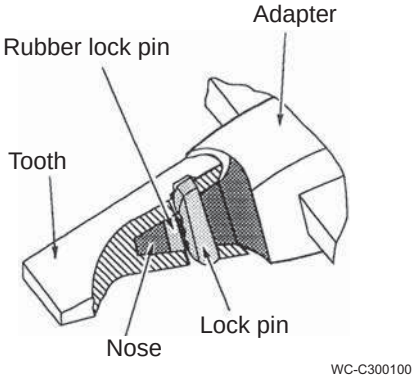

1. Remove the lock pin.
   Remove the tooth.

2. Clean the adapter.

3. Check the removed lock pin and rubber lock pin.
   Replace the lock pin and/or rubber lock pin with new ones if the lock pin is too short and/or the rubber of the rubber lock pin is broken and the balls are going to come off.

   It is recommended that the rubber lock pin should be replaced every time the tooth is replaced.

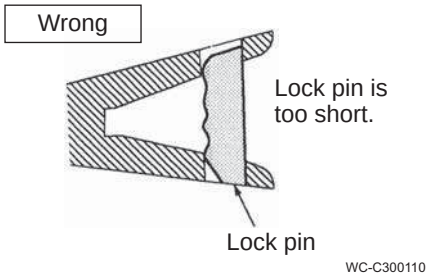

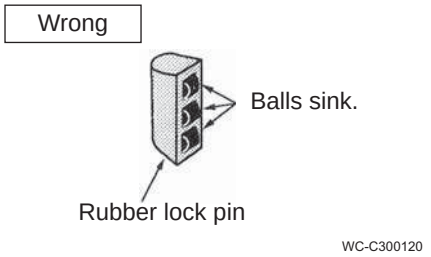

4. Attach the rubber lock pin to the nose.

5. Insert the tooth into the nose.

6. Drive the lock pin until it becomes flush with the tooth surface with a hammer.
   If the lock pin is not driven sufficiently, the tooth may be dislocated.

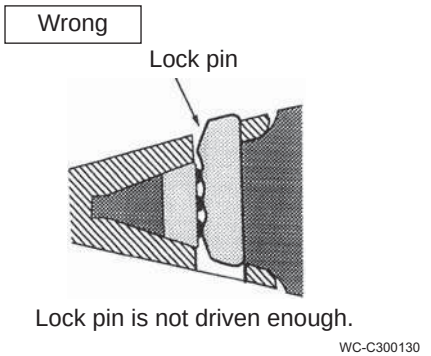

7. Make sure that the tooth is fixed firmly.

https://truckmanualshub.com/

Change the Bucket

⚠ CAUTION

- When the pin is driven with a hammer, fragments may scatter, resulting in injury. Put on protective goggles, protective cap and protective gloves in work.
- Never insert your finger into the pin holes when adjusting the pin holes.

Remove the bucket

1. Place the back of the bucket completely on the ground.
2. Remove the lock bolt from the portion (A).
   Remove the arm point pin.
3. Remove the lock bolt from the portion (B).
   Remove the bucket link pin.
4. Raise the arm slowly.
   Then remove the arm and the bucket.

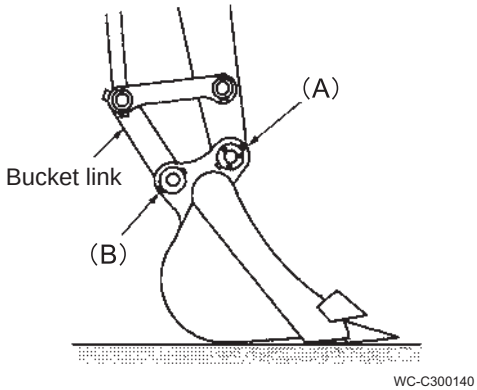

Install the bucket

1. Clean the pin holes in the arm and bucket link and the removed pins. Apply grease to the holes and pins.
2. Replace the O-rings if they are damaged or worn. Attach new O-rings to the bosses of the bucket temporarily.
3. Lower the arm slowly, fit the pin holes in the arm and bucket, and drive the arm point pin. Adjust the positions of the lock bolt and lock hole at this time.
4. Raise the boom to move the bucket apart from the ground and make it free.
5. Extend or contract the bucket cylinder to adjust the pin hole in the bucket link and bucket. Drive the bucket link pin into the holes.
6. Attach the lock bolt.
   Leave the clearance shown on the right when tightening the nut.
7. Move the O-rings to the proper grooves.
8. Grease the arm point pin and bucket link pin.

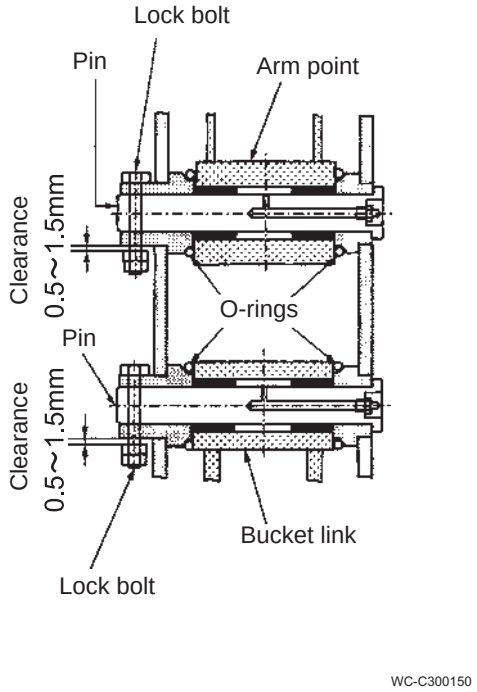

https://truckmanualshub.com/

Adjust the Bucket Clearance

The standard bucket has a bucket clearance adjusting mechanism to prevent backlash.

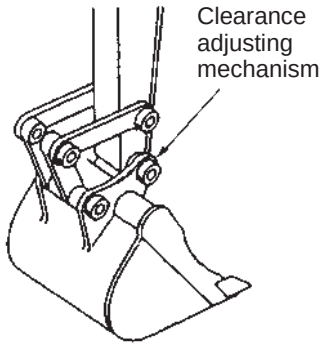

WC-C300160

1. Bring the back of the bucket into slight contact with the ground, and swing the machine a little to the right to make the condition where the top of the arm is pressed against the inside of the clearance adjusting mechanism.

2. Stop the engine.

3. Move the O-ring to above the boss and measure the clearance of the bucket and arm.

4. Remove the shim to adjust the clearance if the clearance is 1 mm or more.
   The thickness of the shim is 0.8 mm. Do not remove the shim if the clearance is 0.8 mm or less.

5. Remove the four bolts. Remove as much shims as the amount of backlash (wear amount) from inside the flange.

6. Attach the flange. Tighten the four bolts.

7. Measure the clearance.
   The standard clearance is 0.1 to 1.3 mm.

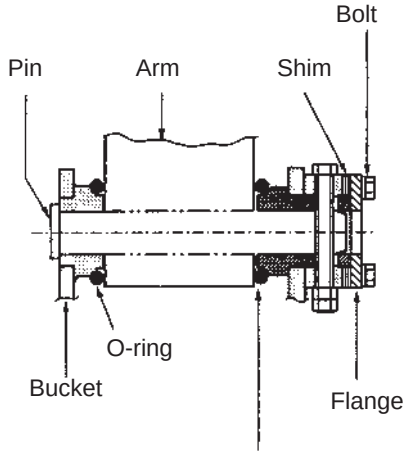

Standard clearance: 0.1 to 1.3 mm

WC-C300170

https://truckmanualshub.com/

CRAWLER SHOE

Rubber Shoe Maintenance

Rubber shoe should be repaired or exchanged if goes into any of the conditions described below.
If it is necessary to repair or replace it, contact your IHI dealer.

Height of Lug

The rubber shoe can be used even if it is worn, however, if it is excessively worn, the rubber shoe is likely to be slippery and more travel force is required. If the remaining lug is less than 5 mm high, exchange it with brand-new one.

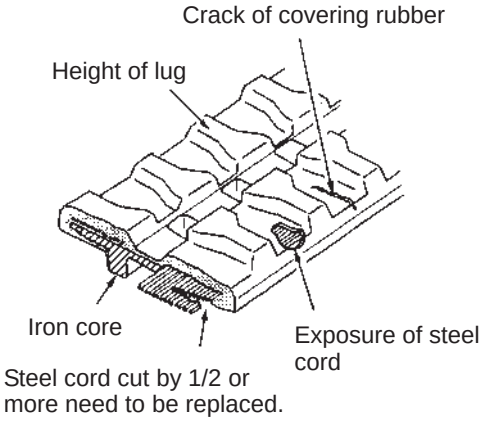

Damages of rubber shoe

WC-C300630

Exposure of Steel Cord

If steel cord is exposed because of weary rubber or damage, exchange it with brand-new one.

Cutting of Steel Cord

When cutting of steel cord is detected, exchange it immediately. If you leave it as it is, the rubber shoes can be cut off without expectation, which causes a serious accident.

Crack of Covering Rubber

If a crack is 30 mm or more long and 8 mm or more deep, repair the covering rubber immediately. If steel cord appears even if a crack is small, repair it immediately. Otherwise, water may come into a crack, which rusts steel cords and cuts off the rubber shoe.

Dislocation of the iron core

Exchange the rubber shoe with a new one if one or more iron cores are dislocated from it.

https://truckmanualshub.com/

Inspection of crawler shoe

The conditions of wear and sag of the crawler shoes differ with the conditions of the work sites. If the slack crawler shoes are used, they may be slipped off. Inspect and adjust their tension as the necessity requires.

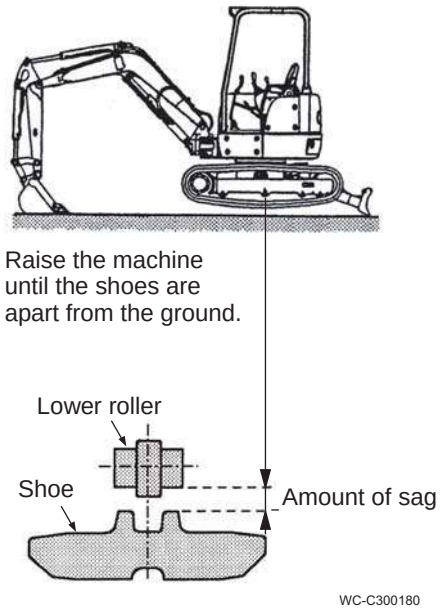

Inspection

1. Raise the machine using the attachment and blade until the crawler shoes become apart from the ground. Support the crawler frame securely with blocks, etc.

2. Measure the clearance between the tread of the lower roller near the center and the tread of the crawler shoe.
   The tension is proper if the clearance is as shown below.

   10 to 20 mm (Rubber shoe)

   30 to 50 mm (Steel shoe)

⚠ WARNING

The machine needs to be raised to inspect the shoe tension. If the machine drops by mistake during inspection, a serious injury may result. Be very careful when the machine is raised.

https://truckmanualshub.com/

Adjustment of Crawler Shoe

Tension the crawler shoe

1. Fill grease through the grease nipple (2) of the check valve (1) until the crawler shoe is tensioned properly.
2. Rotate the crawler forward and backward and check tension. Re-adjust it if necessary.

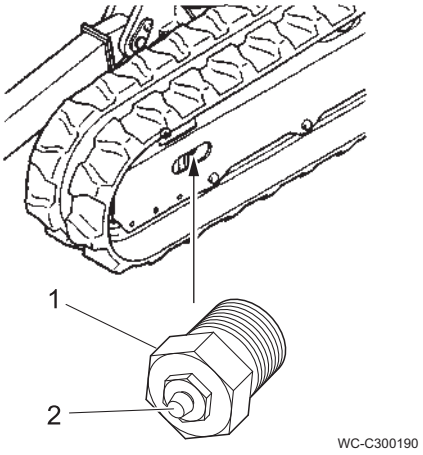

NOTICE

- Adjust the right and left crawler shoes evenly.
- If the shoes are not tensioned properly, the cylinders may be defective. Ask IHI's service dealer for repair services.

Loosen the crawler shoe

1. Remove dirt and soil from around the front idlers.
2. Loosen the check valve until grease is discharged (by a maximum of one turn) little by little. Do not loosen it when grease is discharged.
3. Rotate the crawler shoe forward and backward slightly if grease is hardly discharged.
4. Tighten the check valve when the crawler shoes are tensioned properly.
   Tightening torque: 59 to 69 N·m (6 to 7 kgf·m)

NOTICE

Be careful not to over-tighten the check valve.

5. Rotate the crawler shoe forward and backward and check tension. Re-adjust it if necessary.

⚠ WARNING

- When the crawler shoe is tensioned intensely, the internal pressure in the grease cylinder is very high.
  Grease may spout out or the check valve may spring out, causing a serious accident.
- To relief the pressure, loosen the check valve gradually. Do not loosen it when grease is discharged. (It should be loosened by a maximum of one turn.)
- Grease may spout out at high pressure. Never loosen the grease nipple.
- Do not bring your face or hand close to the check valve during adjustment.

https://truckmanualshub.com/

TRAVEL REDUCTION GEAR

Check Oil Level and Refilling

1. Stop the engine so that the oil filler/drain port is located at the upper position.
2. Place the container under the travel reduction gear.
3. Remove the level plug (1). If the oil surface reaches the plug hole, the oil level is proper.
4. Pour oil through the oil filler/drain port until the oil surface reaches the bottom of the level port, if oil is insufficient.
5. Clean the level plug and oil filler/drain plug (2) and attach them.

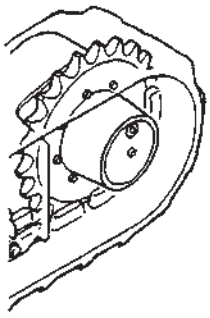

WS-C300070

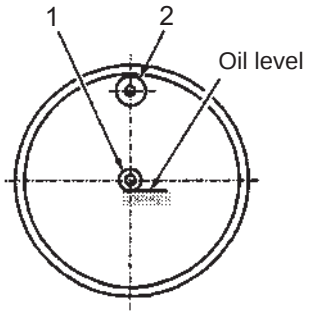

Checking oil level or filling oil

WS-C300080J

Change Oil

1. Locate the filler/drain port to the lower position and stop the engine.
2. Place the container under the filler/drain port.
3. Remove the level plug and filler/drain plug to discharge oil.
4. Start the engine and run the motor until the filler/drain port is located at the upper position. Stop the engine again.
5. Fill oil through the filler/drain port until oil flows out of the level port.

Specified oil	Qty
Gear oil API GL-4, SAE90	0.5 L

6. Clean both plugs and attach them.

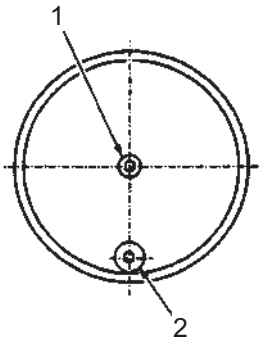

Discharging oil

WS-C300090J

⚠ CAUTION

The gear case and oil are hot immediately after stopping the engine. Wait until the temperature lowers.

https://truckmanualshub.com/

HYDRAULIC SYSTEM

Place the machine in a horizontal place, bring the blade in contact with the ground, retract the arm cylinder and bucket cylinder fully, and move down the boom to lower the bucket onto the ground when executing inspection and/or maintenance of the hydraulic system.

⚠ CAUTION

- Oil is hot immediately after stopping the engine.
  Wait until the temperature lowers and start operation then.
- Hydraulic oil is compressed. If the filter cartridge is taken out in such a condition, oil spouts out, resulting in a dangerous accident. Be sure to stop the engine and lower the internal pressure.

Hydraulic Oil Level and Refilling

1. Stop the engine.

2. Check the oil level gauge (1). If the oil level is between H and L, it is proper.
   The oil level differs with the oil temperature. The following shows the standard.

   - Near the L level before starting operation
     (Oil temperature: 10°C to 30°C)
   - Near the H level during operation
     (Oil temperature: 50°C to 80°C)

3. If the oil level is below the L level, refill hydraulic oil through the filler port (2).

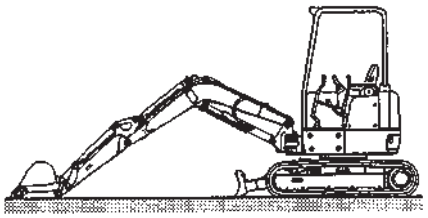

Posture of checking hydraulic oil level

WC-C300210

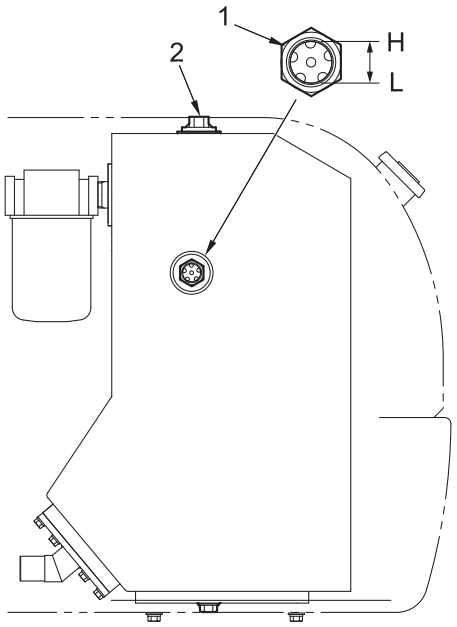

WC-C300220

NOTICE

- Do not operate the machine if the oil level is below the "L" level.
- Loosen the drain plug and discharge excess oil if oil is filled over the "H" level.

Drain the Hydraulic Oil Tank

1. Loosen the drain plug under the hydraulic oil tank to discharge water and sediment into the container.
2. Tighten the drain plug when clean hydraulic oil is only discharged.
3. Check the hydraulic oil level and refill oil if insufficient.

https://truckmanualshub.com/

Replace Return Filter Cartridge

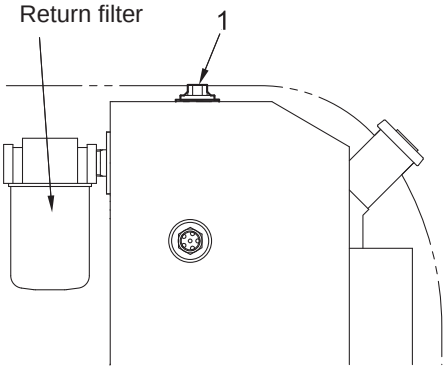

WC-C300230

1. Stop the engine.

2. Loosen the oil filler plug (1) of the hydraulic oil tank to lower the internal pressure of the tank.

3. Turn the filter cartridge (2) counterclockwise with the filter wrench.

4. Apply hydraulic oil thinly to the gasket (3) of a new cartridge and tighten it with the filter wrench. When the gasket is crushed and the top surface of the cartridge is brought into contact with the head (4), it is the limit of tightening.

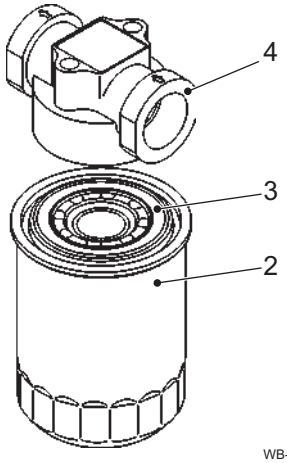

WB-C310150

5. Start the engine and make sure that no oil leaks from the gasket of the cartridge.

6. Bring the machine into the posture of checking the oil level and check the level.
   The oil level is proper if it is between H and L of the level gauge (5). Refill hydraulic oil if insufficient.

7. Extend all cylinders fully, attach the oil filler plug, and pressurize the tank.

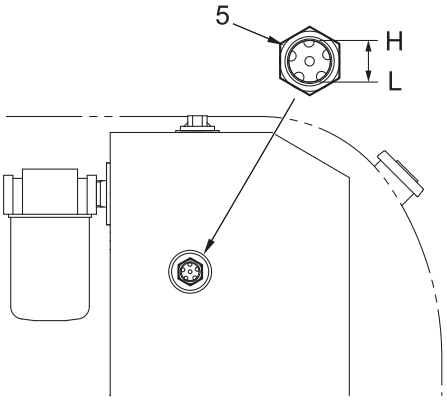

WC-C300250

NOTICE
When the breaker work is done, hydraulic oil is deteriorated more than normal digging works. Replace the filter cartridge every 100 hours.

Posture of pressurizing hydraulic oil tank

WC-C300260

https://truckmanualshub.com/

Change the Hydraulic Oil and Clean the Strainer

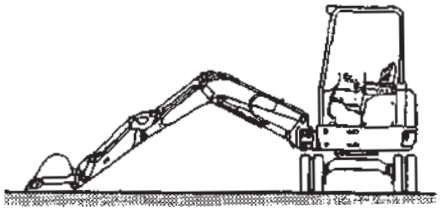

Posture of discharging hydraulic oil

WC-C300270

1. Swing the upper structure until the drain plug (1) of the hydraulic oil tank is in the center of the right and left crawlers.

2. Lower the boom to lower the bucket onto the ground.

3. Stop the engine.

4. Remove the oil filler plug (2) of the hydraulic oil tank to discharge air from the tank.

5. Place the container under the drain plug.
   Remove the drain plug to discharge oil.
   Tighten the drain plug after discharging oil.

6. Loosen the hose clamp (3), disconnect the hose (4), and remove the strainer cover (5).

7. Clean the strainer (6) and attach it.

8. Attach the strainer cover, hose, and hose clamp.

9. Refill the tank with hydraulic oil through the oil filler port up to the specified level.
   Make sure that the oil level is between H and L of the level gauge (7).

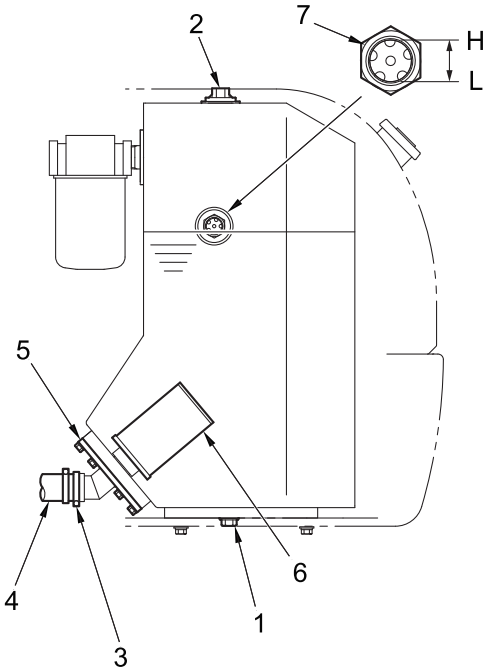

WC-C300281

https://truckmanualshub.com/

10. Discharge air from the hydraulic pump.
    Loosen the air vent plug (8) and make sure that air is discharged and oil flows out through the valve hole.

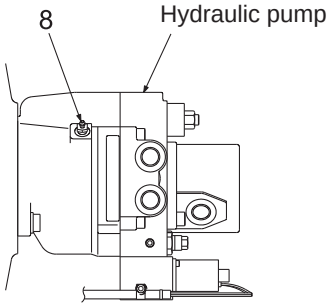

WQ-C300010

NOTICE
The hydraulic pump may be broken unless air is discharged. Be sure to discharge air from the hydraulic pump after changing hydraulic oil or replacing the hydraulic pump.

11. Idle the engine for approximately two to three minutes at low speed. Bring the machine into the level checking posture and check the oil level. Refill hydraulic oil if insufficient.

12. Pressurize the hydraulic oil tank.
    Extend all cylinders fully.
    Remove the oil filler plug to fill the tank with air.
    Attach the plug then.

Posture of pressurizing hydraulic oil tank
WC-C300260

NOTICE
The service life of the hydraulic pump becomes shorter and serious damages may result, if the tank is not pressurized.

NOTICE
Breaker work is done in severer conditions than normal digging works and hydraulic oil is deteriorated earlier. If the machine is used with deteriorated hydraulic oil, the hydraulic devices and the whole hydraulic circuit may become defective. Change hydraulic oil and clean the strainer every 500 hours.

https://truckmanualshub.com/

HYDRAULIC SYSTEM DIAGRAM

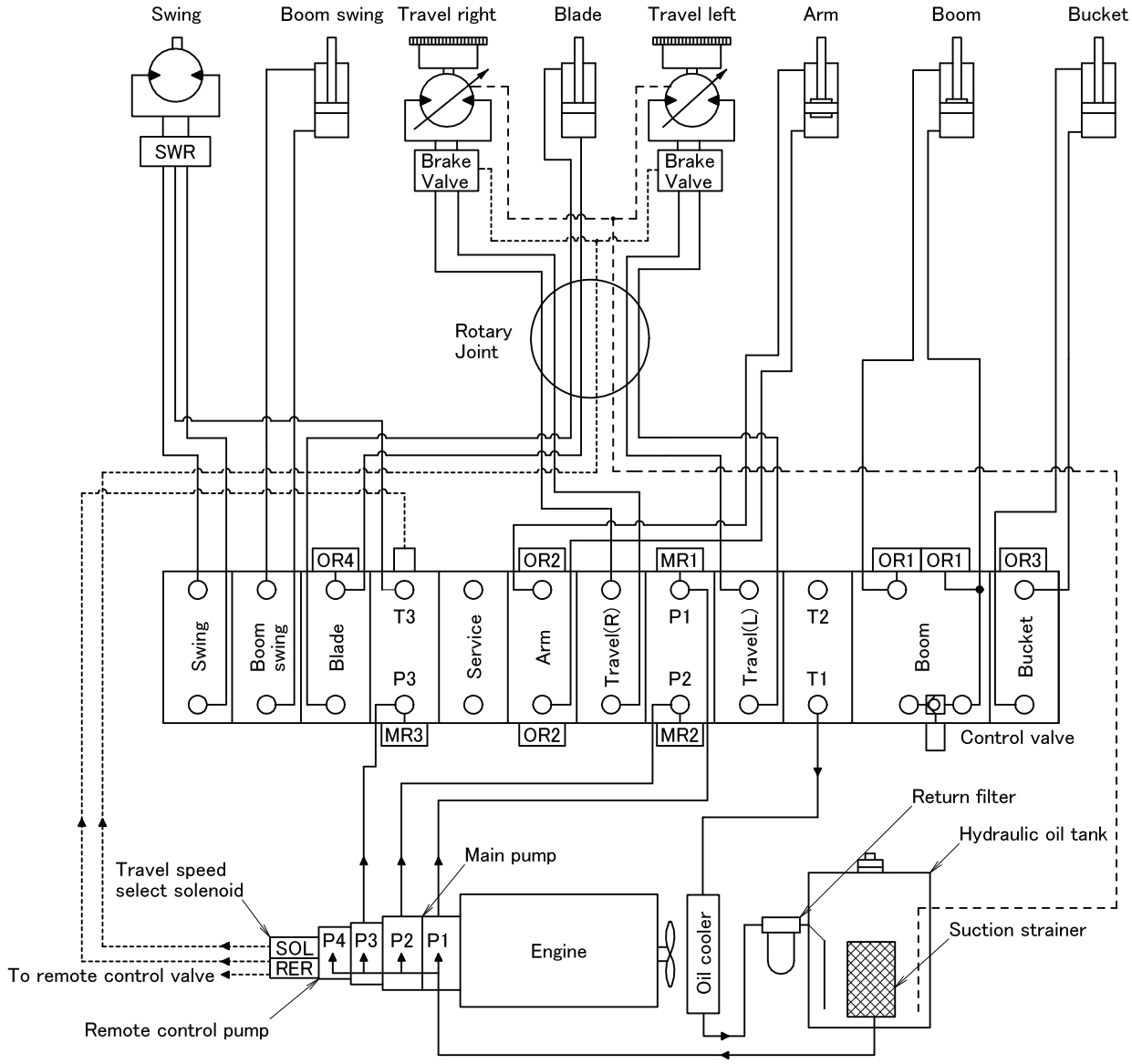

Relief valve set pressure

Code	Item	Pressure		
		Mpa	kgf/cm^2	psi
MR1	Main relief valve P1 pump	20.6	210	2987
MR2	Main relief valve P2 pump	20.6	210	2987
MR3	Main relief valve P3 pump	18.1	185	2631
OR1	Over load relief valve (Boom)	22.6	230	3271
OR2	Over load relief valve (Arm)	22.6	230	3271
OR3	Over load relief valve (Bucket)	24.5	250	3556
OR4	Over load relief valve (Blade)	22.6	230	3271
SWR	Swing relief valve	15.7	160	2276
RER	Remote control relief valve	2.9	30	427

Pump flow rate

Pump	Flow rate (Max)
P1	29.9 L/min
P2	29.9 L/min
P3	19.8 L/min
P4	11.7 L/min

Service line flow : P2 + P3

https://truckmanualshub.com/

ENGINE OIL

Place the machine in a horizontal place, bring the blade in contact with the ground, retract the arm cylinder and bucket cylinder fully, and move down the boom to lower the bucket onto the ground when executing inspection and/or maintenance of the lubrication system.

⚠ CAUTION

- Oil is hot immediately after stopping the engine. You may get burnt if you touch oil. Start work after oil has cooled down.
- Wipe off spilt oil completely. If it is left as is, it may cause a fire.

Check the Engine Oil Level and Refill

1. Stop the engine.
2. Pull out the oil level gauge, clean it with cloth, insert it fully again, and pull it out slowly.
3. The oil level is proper if it is between the marks of the upper and lower limits.
   Refill the engine with engine oil through the oil filler port if the oil level is below the lower limit.
4. Discharge excess oil through the drain port if the oil level is over the upper limit. Check the oil level again.

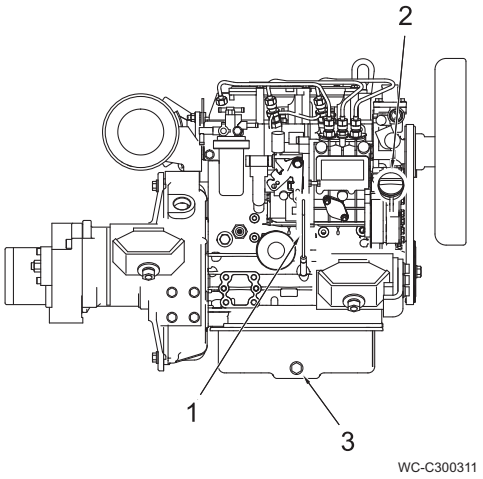

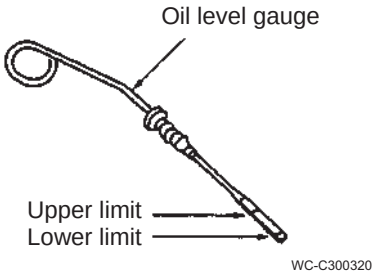

NOTICE

- Make the machine horizontal before checking the oil level.
- Check the oil level 10 minutes or more after stopping the engine, if the engine has started.
- Do not start the engine if the oil level exceeds the upper limit or below the lower limit.

https://truckmanualshub.com/

Replace the Engine Oil and Engine Oil Filter

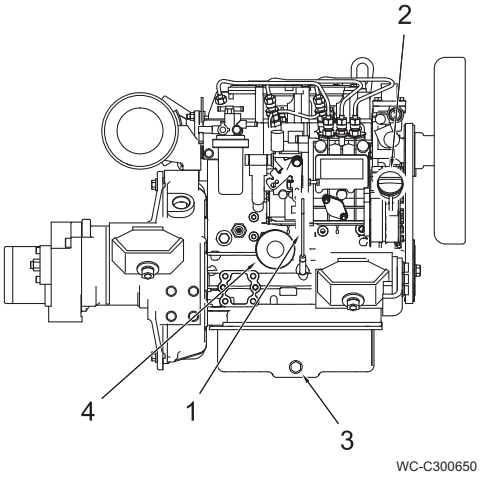

1. Stop the engine.
2. Place the container just under the drain port of the engine.
3. Clean the oil filler cap (2) and around it in order not to let in foreign matters. Remove the oil filler cap.
4. Remove the drain plug (3) slowly so that oil will not splash on you. Discharge oil.
5. Check waste oil. If you find a lot of metallic powder, foreign matters, etc., contact our service office.
6. Turn the filter (4) counterclockwise to detach it using the filter wrench.
7. Clean dust and foreign matters from the filter mounting surface.
8. Apply engine oil thinly onto the gasket of a new filter.
9. Turn the filter to the right to mount it. Tighten it further by approximately 3/4 turn with the filter wrench after the gasket contacts with the seal surface.
10. Attach the drain plug.
11. Fill the engine with engine oil until the oil level becomes between the upper limit and lower limit of the level gauge (1).
12. Idle the engine for several minutes, stop the engine, and check the level of engine oil 10 to 20 minutes later. Refill the engine with engine oil up to the specified level if the oil level is low.

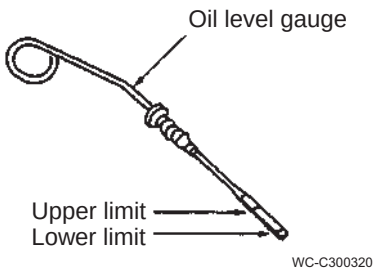

https://truckmanualshub.com/

FUEL SYSTEM

Check Fuel Quantity and Refilling

1. Turn the engine key switch key to the ON position and check the quantity of remaining fuel on the fuel gauge.

   Fuel tank capacity: 35 L

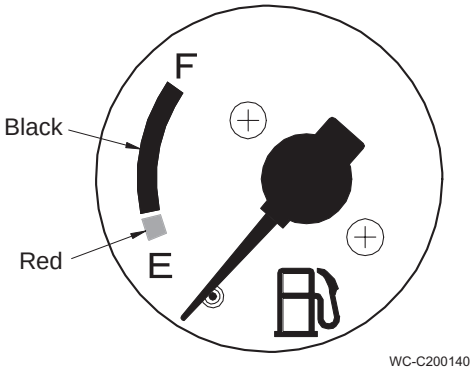

2. Refill the tank with fuel through the filler port (1) if remaining fuel is insufficient.
   Clean the strainer (2) of the filler port (1) if it is dirty.

3. Tighten the cap after refilling. Lock it with the engine key.

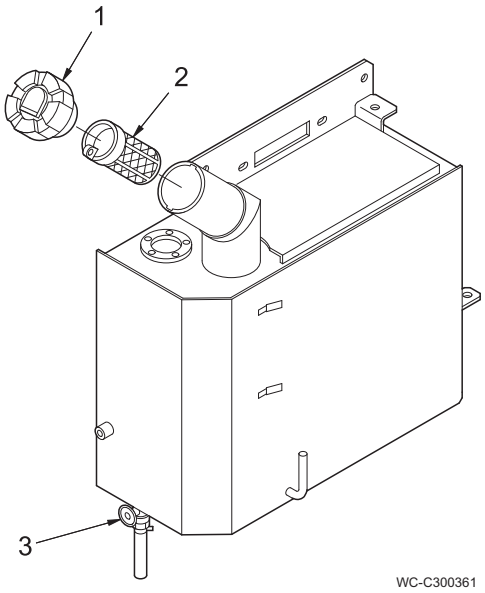

⚠ CAUTION

- If fuel overflows or spills, it may cause a fire. Wipe off spilt fuel completely.
- If the strainer is dismounted and fuel is refilled, the engine may become defective. Do not dismount it.
- Do not bring fire close to the engine.
- If any other fuel than light oil, bad influences are caused upon the engine, which may be incapable of demonstrating its functions and performances sufficiently. In addition, using such fuel may cause engine failures or accidents. Never use any other fuel than light oil.
  Defects caused by using any other fuel than light oil is exempted from warranty.

Discharging Water from Fuel Tank

1. Open the drain cock (3) at the bottom of the fuel tank to discharge water and sediment before starting work.

2. Close the drain cock when clean fuel comes out.

https://truckmanualshub.com/

Check and Clean Water Separator and Replace Element

If the float (1) of the water separator is floating, water reaches the bottom of the float.

Discharge water if the float reaches the element (2).

1. Stop the engine.
2. Close the fuel cock (3).
3. Turn the retainer ring (4) counterclockwise and detach the cup (5).
4. Take out the float and spring (6) from inside of the cup.
5. Dispose of water and sediment from the cup into a container.
6. Put the float and spring into the cup.
7. Turn the retainer ring clockwise to attach the cup. Tighten the retainer ring by hand.
8. Open the fuel cock as before.
9. Discharge air from the water separator.
10. Make sure that no fuel leaks.

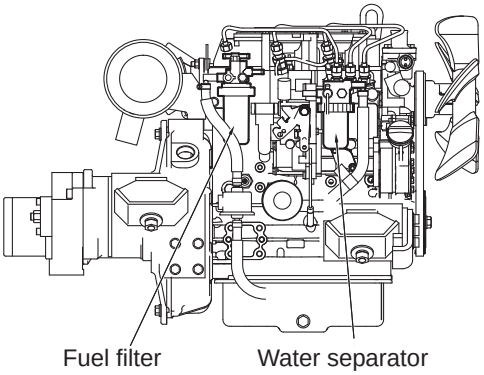

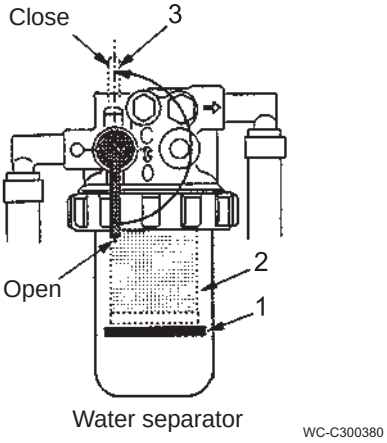

Cleaning and Replacing

1. Stop the engine.
2. Close the fuel cock.
3. Turn the retainer ring counterclockwise and detach the cup.
4. Take out the float and spring from inside of the cup.
5. Discharge water and sediment from inside of the cup into the container.
6. Clean the element and inside of the cup completely with fresh fuel. Replace the element if it is flawed or damaged.
7. Attach the element and O-ring to the body.
   If the O-ring is damaged, replace it with a new one.
8. Put the float and spring in the cup.
9. Turn the retainer ring clockwise and attach the cup. Be sure to tighten it by hand.
10. Open the fuel cock as before.
11. Discharge air from the water separator.
12. Make sure that no fuel leaks.

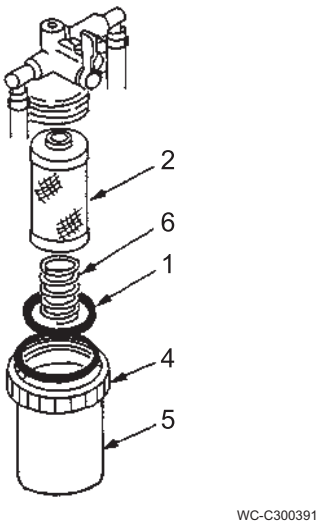

⚠ CAUTION

- Fuel is hot immediately after stopping the engine. Carry out the work after the fuel temperature has become lower.
- Do not bring fire close to the engine.
- Wipe off spilt fuel completely. If it is left as is, it may cause a fire.

https://truckmanualshub.com/

Check and Clean Water Separator and Replace Element with Sensor (option)

Discharging Water

When the water separator warning lamp on the OK monitor turns on, the water separator contains the specified amount of water.
Discharge the water.

1. Stop the engine.
2. Close the fuel cock (3).
3. Open the drain plug (4) to discharge water and foreign matters to the container.
4. Close the drain plug.
5. Open the fuel cock as before.
6. Discharge air from the water separator.
7. Make sure that no fuel leaks.

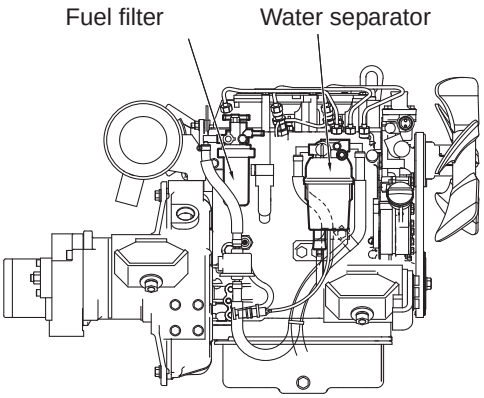

WC-C300670

Cleaning and Replacing

1. Stop the engine.
2. Close the fuel cock.
3. Disconnect the wiring connector.
4. Open the drain plug to discharge water and foreign matters to the container.
5. Turn the cup (5) counterclockwise to detach it.
6. Take out the float (1) from inside of the cup.
7. Discharge water and sediment from inside of the cup into the container.
8. Clean the element (2) and inside of the cup completely with fresh fuel. Replace the element if it is flawed or damaged.
9. Attach the element and O-ring to the body.
   If the O-ring is damaged, replace it with a new one.
10. Put the float in the cup.
11. Turn the cup clockwise to attach it to the body. Be sure to tighten it by hand.
12. Close the drain plug.
13. Connect the wiring connector.
14. Open the fuel cock as before.
15. Discharge air from the water separator.
16. Make sure that no fuel leaks.

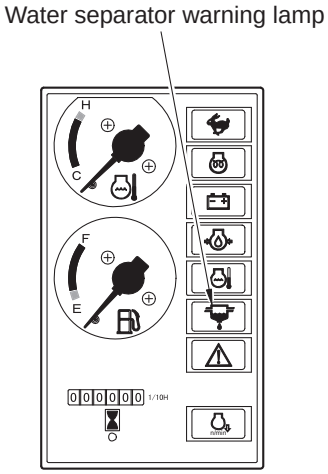

OK monitor
WS-C300370

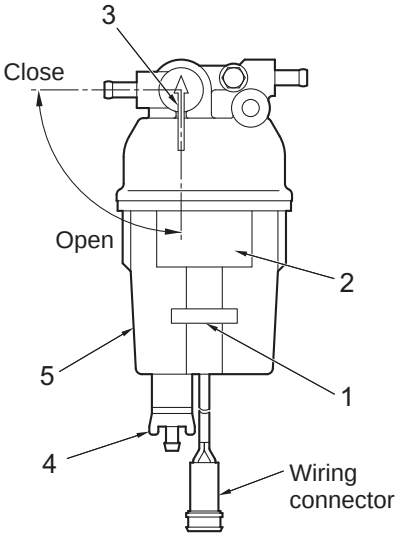

Water separator
WS-C300380

https://truckmanualshub.com/

Replace Element of Fuel Filter

1. Stop the engine.
2. Turn the fuel cock (1) to the "Close" position to cut off fuel.
   If the cup (3) is taken out without turning the fuel cock to the "Close" position, fuel may flow out.
3. Turn the retainer ring (2) counterclockwise, take out the cup, and pull down the element (4) to take it out.
4. Clean the inside of the cup.
5. Attach new element and O-ring (5) to the body.
   Replace the O-ring if it is damaged.
6. Turn the retainer ring clockwise to attach the cup.
   Tighten the retainer ring by hand.
7. Open the fuel cock as it was.
8. Discharge air if the fuel filter is replaced.
9. Make sure that no fuel leaks.

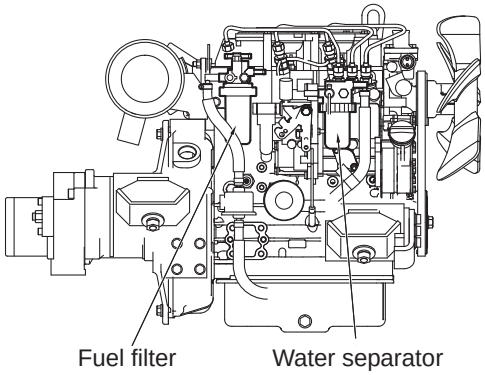

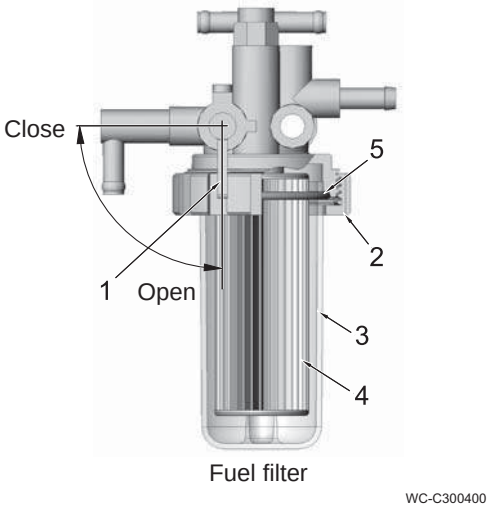

How To Discharge Air

Discharge air after maintenance of the fuel filter or water separator is carried out or the fuel tank is emptied.

1. Fill the fuel tank full with fuel.
2. Turn the engine key switch to the ON position and keep it at that position for approximately 20 seconds.
3. The automatic air discharging device discharges air automatically. The engine can be started.

⚠ CAUTION

- Fuel is hot immediately after stopping the engine. Carry out the work after the light oil temperature has become lower.
- Do not bring fire close to the engine.
- Wipe off spilt light oil completely. If it is left as is, it may cause a fire.

https://truckmanualshub.com/

COOLING SYSTEM

Check the Coolant Level and Refill

⚠ CAUTION

Do not open the radiator cap normally. Check coolant in the subtank when the engine is cool.

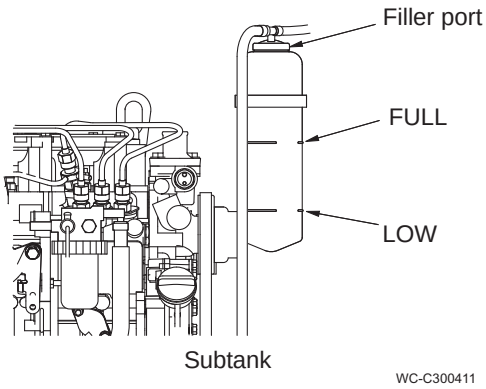

1. Open the engine cover and check if the coolant level in the subtank is between the LOW and FULL levels. Refill the subtank with coolant through the filler port up to the FULL level.
   Close the cap firmly after refilling.

2. If the subtank is empty, stop the engine, check for water leak, check the water level in the radiator, and refill the radiator and subtank with coolant.

Change the Coolant

⚠ WARNING

- Coolant is hot immediately after stopping the engine. If coolant is discharged immediately, you may get burnt. Change coolant after the engine cools down.
- Do not remove the cap when the coolant is hot. Hot water may spout out.
  Rotate the cap slowly to relief the pressure after the coolant temperature lowers.

1. Coolant

- A new machine is filled with coolant containing long life coolant (LLC). This coolant has effects of preventing freezing and corrosion.
  It effects for long and may be used all over the year.
- Change coolant every two years (in autumn every two years).
- Change coolant at the shorter interval of 6 months or 250 hours if LLC is not used.
- It is recommended that LLC should be used when changing coolant.

⚠ WARNING

- The long life coolant is toxic.
- Vomit it immediately and consult a doctor, if you swallow it by mistake.
- Wash your eyes completely with water immediately and consult a doctor, if it is put into the eyes.
- Use a container with an antifreeze mark to store long life coolant. Cap the container and store it in a place not accessible by children.

https://truckmanualshub.com/

2. Mixing ratio of coolant

The freezing temperature of coolant depends on the ratio of mixing with water and LLC. Decide the mixing ratio so that the freezing temperature becomes 5°C lower than the expected lowest temperature.
Use "city water" to mix with LLC.

Lowest temperature		-15°C or more	-25°C	-35°C
Mixing ratio		30%	41%	49%
Mixing Qty	LLC qty	1.2 L	1.6 L	2.0 L
	Water qty	2.8 L	2.4 L	2.0 L
Total coolant qty: 4.0 L		Engine only: 0.9 L Radiator, etc.: 2.6 L Subtank: 0.5 L		

3. Procedures of changing coolant

1) Lower the attachment onto the ground and stop the engine.
2) Remove the radiator cap (1).
3) Open the drain cock (2) below the radiator to discharge water.
   Then, remove the drain plug (3) of the cylinder block to discharge water.
4) Close the drain cock and drain plug, pour city water and cleaning solution, and idle the engine for approximately ten minutes.
5) Stop the engine and open the drain cock and drain plug to discharge water.
6) Close the drain cock and drain plug after discharging water. Pour city water then.
7) Open the drain cock and drain plug. Idle the engine at the low idling revolution and clean the cooling water system with water for ten minutes while adjusting the pouring quantity so that the radiator is always full of water.
8) Close the drain cock and drain plug and fill coolant containing mixed city water and LLC up to the water filler port of the radiator.
9) Run the engine at the low idling for five minutes and stop it then.
   Internal air is discharged and the water level lowers. Refill coolant close to the water filler port and tighten the cap.
10) Discharge coolant from the subtank (4), clean the inside of the tank, fill the tank with coolant up to the FULL mark.

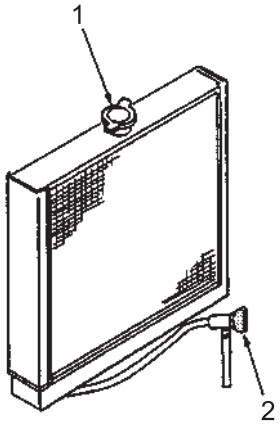

WC-C300420

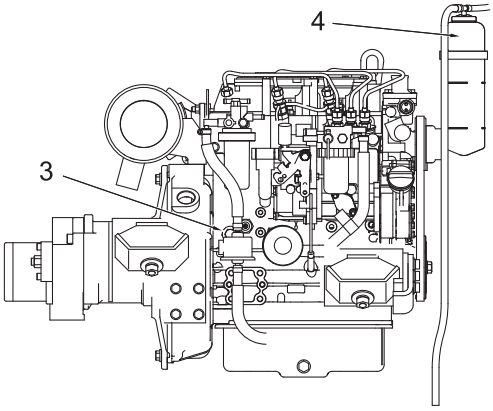

WC-C300431

https://truckmanualshub.com/

Check the Fan Belt

WARNING

- The engine is hot immediately after stopping it. You may get burnt if you touch the engine. Wait until each part cools down.
- Stop the engine and keep the key of the starter switch in safe.

NOTICE

- If belt tension is excessive, the bearings and belt will be damaged earlier.
- Replace the bolt if it has elongated and the adjustment margin is lost.
- Run the engine at high speed for 30 minutes after the belt is replaced. Check and adjust belt tension then.

1. Check

1) Push a point in the middle of the fan pulley and alternator pulley at approximately 98 N (10 kg). The belt tension is proper if the belt slacks by approximately 10 mm.

2) Replace the belt if the belt has cracks.

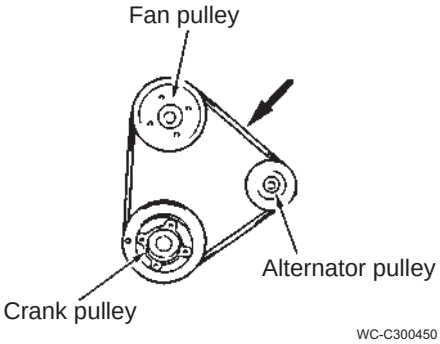

2. Adjustment

1) Loosen the bolts (1) and (2).

2) Turn the adjust bolt (3) to move the alternator (4) so that the belt slackens by approximately 10 mm.

3) Tighten the bolts.

4) Replace the bolt if it has elongated and the adjustment margin is lost.

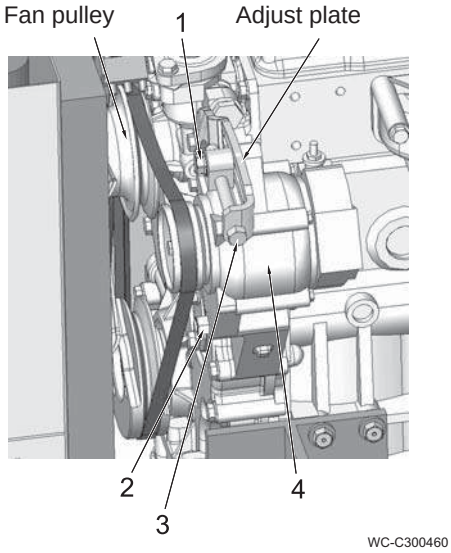

https://truckmanualshub.com/

Inspect and Clean Radiator Fins and Oil Cooler Fins

⚠ CAUTION

Be sure to put on protective goggles when handling compressed air or high-pressure water in inspection of the engine. Otherwise, your eyes may be hurt by dust, scattered matters, compressed air, high-pressure water or steam.

1. Blow out dust with compressed air (at 0.2 MPa or less) from the fins.
   Be careful not to damage the fins with compressed air.

2. Clean the fins with neutral detergent and city water if a lot of dust adheres to the fins.

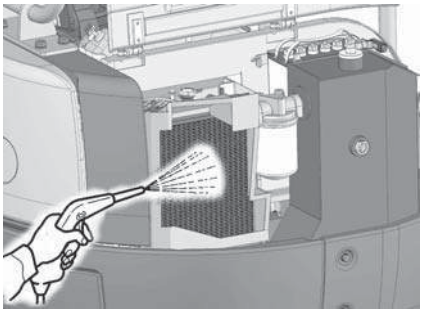

WC-C300470

NOTICE

Use high-pressure water and compressed air at as low pressure (0.2 MPa) as possible. Do not use a wire brush to clean the fins. A wire brush may damage the fins.

https://truckmanualshub.com/

INTAKE AIR SYSTEM

Inspect Dust Indicator

1. Check if the red signal is indicated on the dust indicator of the air cleaner.

2. Clean or replace the element immediately if the red signal is indicated.

3. Push the reset button of the dust indicator to reset the red signal after cleaning or replacing the element.

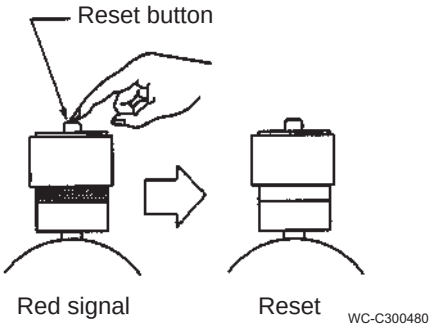

NOTICE
Clean or replace the element of the air cleaner if the red signal is found in daily inspection, regardless of the maintenance interval.

https://truckmanualshub.com/

Inspect and Clean Air Cleaner Element

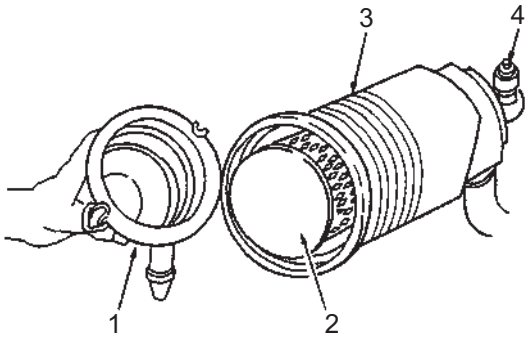

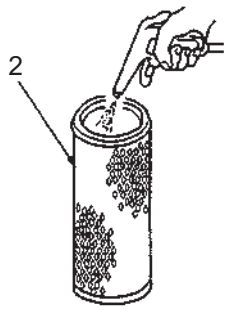

Cleaning element with air

WC-C300490

1. Stop the engine.
2. Remove the cover (1) and take out the element (2).
3. Clean the inside of the cover and the body (3).
4. Blow dry compressed air “at 0.29 - 0.49 MPa (3 - 5 kgf/cm^2)” from inside the element to the filter up and down along the furrows. Keep a certain distance from the nozzle top to the filter (approx. 50 cm).
5. Insert a lamp (incandescent lamp) into the element and turn it on to check damages of the filter.
   Do not use the filter if it has damages, pinholes, especially thin parts or damaged seal.
6. Attach the element after cleaning.
7. Attach the cover with the arrow mark (⇧) on it upward and fix it with the clamp.
8. Push the button of the dust indicator (4) to reset the signal.

NOTICE

- Replace the element with a new one, regardless of the replacement interval, if it is dirty with lamp soot, soot or oil.
- Do not pat, hit or drop the element.

Replace Air Cleaner Element

Disassemble the air cleaner in the same manner as inspection and cleaning procedures and replace the element with a new one.

⚠ CAUTION

- Be sure to stop the engine when carrying out maintenance of the air cleaner.
  If it is carried out while the engine is running, dust is sucked and the engine may be damaged.
- Put on protective goggles when cleaning the element using compressed air.
  Otherwise, dust may be put in your eyes, which is dangerous.

https://truckmanualshub.com/

ENGINE

Check and Adjust Governor Lever

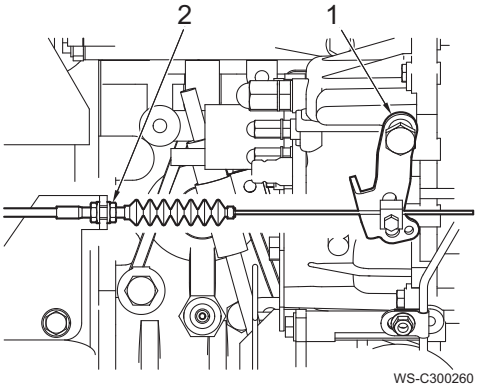

1. Check that the governor lever (1) makes firm contact with the high idle stop and the low idle speed limit screw when the engine speed control is in the full speed or low idle speed positions.

2. If the governor lever does not make proper contact with the high idle stop or the low idle speed limit screw, adjust the throttle cable or linkage as necessary.

NOTICE
Do not change the no-load minimum or maximum revolution with the limit bolt. Otherwise, the safety and/or performance of the machine may be deteriorated or the service life of the machine may be reduced.

Adjust Intake Valve and Exhaust Valve Clearance

Proper adjustment is necessary to maintain the correct timing for opening and closing the valves. Improper adjustment will cause the engine to run noisily, resulting in poor engine performance and engine damage.

Check of Fuel Injection System

Proper operation of the fuel injectors is required to obtain the optimum injection pattern for full engine performance. The EPA/ARB requires that you have the injectors inspected, cleaned and tested every 1500 hours.

Inspect Crankcase Breather System

The crankcase breather system must work properly so that the engine meets the exhaust gas regulations for long. Inquire our service office about the necessary works.

Clean Coolant System

Rust and scale adhere to the coolant system naturally in long-term use, resulting in bad cooling. As a result, the cooling efficiency is reduced, the engine oil is not cooled sufficiently and oil is deteriorated earlier.

Lap Intake and Exhaust Valves

Adjustment is necessary to maintain proper contact of the valves and seats.

https://truckmanualshub.com/

ELECTRIC SYSTEM

Replace the Fuses

NOTICE

- Be sure to set the engine key switch to the OFF position before replacing the fuses.
- Do not use wires, silver foils, etc. instead of fuses.
  If such materials are used, the wires may overheat and burn, resulting in a fire.

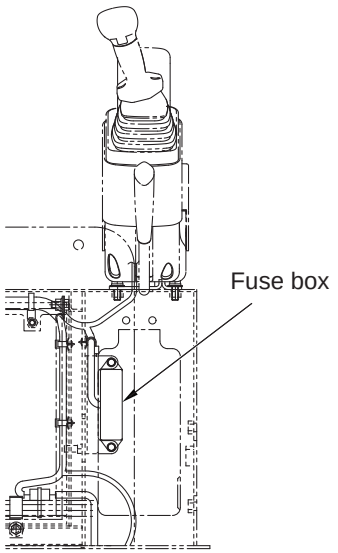

WC-C300520

1. Set the engine key switch key to the OFF position.
2. Take off the fuse cover.
3. Replace the blown fuse with a new fuse of the same capacity by using the fuse pulling holder installed in the fuse box.

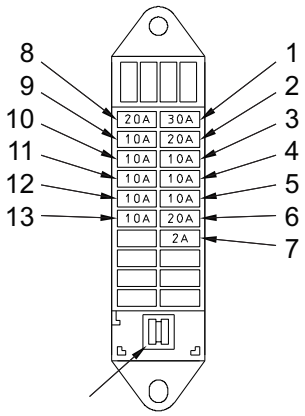

WC-C300640

	Fuse capacity	Circuit name
1	30 A	Engine
2	20 A	Work light
3	10 A	Fuel pump, travel speed switch, horn
4	10 A	Crane spec.
5	10 A	Power outlet
6	20 A	Wiper, heater
7	2 A	Radio
8	20 A	Cigar lighter, room lamp
9	10 A	OK monitor, gate lock lever
10	10 A	1st PTO
11	10 A	2nd PTO
12	10 A	3rd PTO
13	10 A	One-touch decel

Replace the Fusible Link

If power is not turned on even though the engine key switch is set to the ON position, the fusible link between the battery and the engine key switch circuit may have blown out. Remove and check the fusible link. Replace it with a new fusible link, if it has blown out.

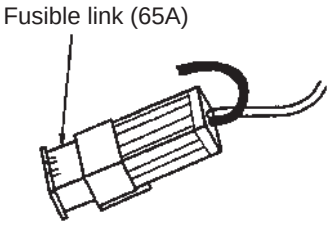

WC-C300550

https://truckmanualshub.com/

Check the Battery

⚠ WARNING

- The battery produces inflammable hydrogen gas. It ignites or explodes if fire is nearby. Never bring fire close to the battery or strike a spark near it.
- Never place any tool, metallic object or inflammable matter on or near the battery. The battery may possibly ignite and explode if it short-circuits.
- The battery liquid (diluted sulfuric acid) may cause loss of eyesight or burning. If it is put into the eyes or on the skin or clothes, wash with much water immediately and consult a doctor.
- Be sure to put on protective goggles when handing the battery.
- Be sure to confirm that the battery handles and handle mounting positions are firm before moving up the battery.

Refill battery liquid

Inspect the electrolyte level look at the indicator or sight level line on the battery.

Maintain the level to the upper level of the sight level line with distilled water when required.

Level of electrolyte must never fall below tops of plates.

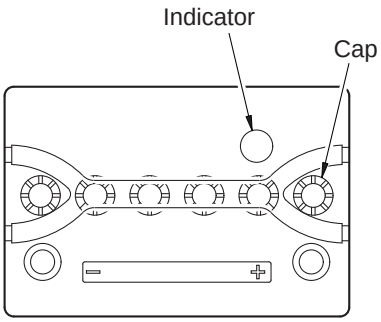

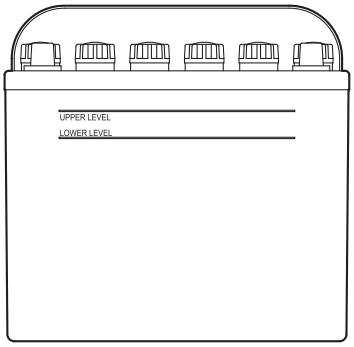

Indication of indicator

The standard recharging conditions and liquid levels are as shown below.

Good	◎	(Blue)
Needs recharging	○	(White)
Liquid insufficient	●	(Red)

WC-C300560

Clean the battery terminals

NOTICE

- Be sure to keep the engine stopping during work.
- Be careful during work not to short-circuit the positive and negative terminals of the battery with a tool, etc.
- Disconnect the battery cable from the negative terminal first. Connect it to the negative terminal last.
- Tighten the terminals firmly.

1. Clean the terminals if they are dirty or corroded. (Pour warm water onto the terminals and wipe them if they are corroded and white powder sticks on them.)
2. Detach the terminals and polish them with a wire brush or sandpaper if they are corroded remarkably.
3. Apply grease, etc. thinly to the terminals after cleaning and tightening.

https://truckmanualshub.com/

ELECTRIC SYSTEM DIAGRAM

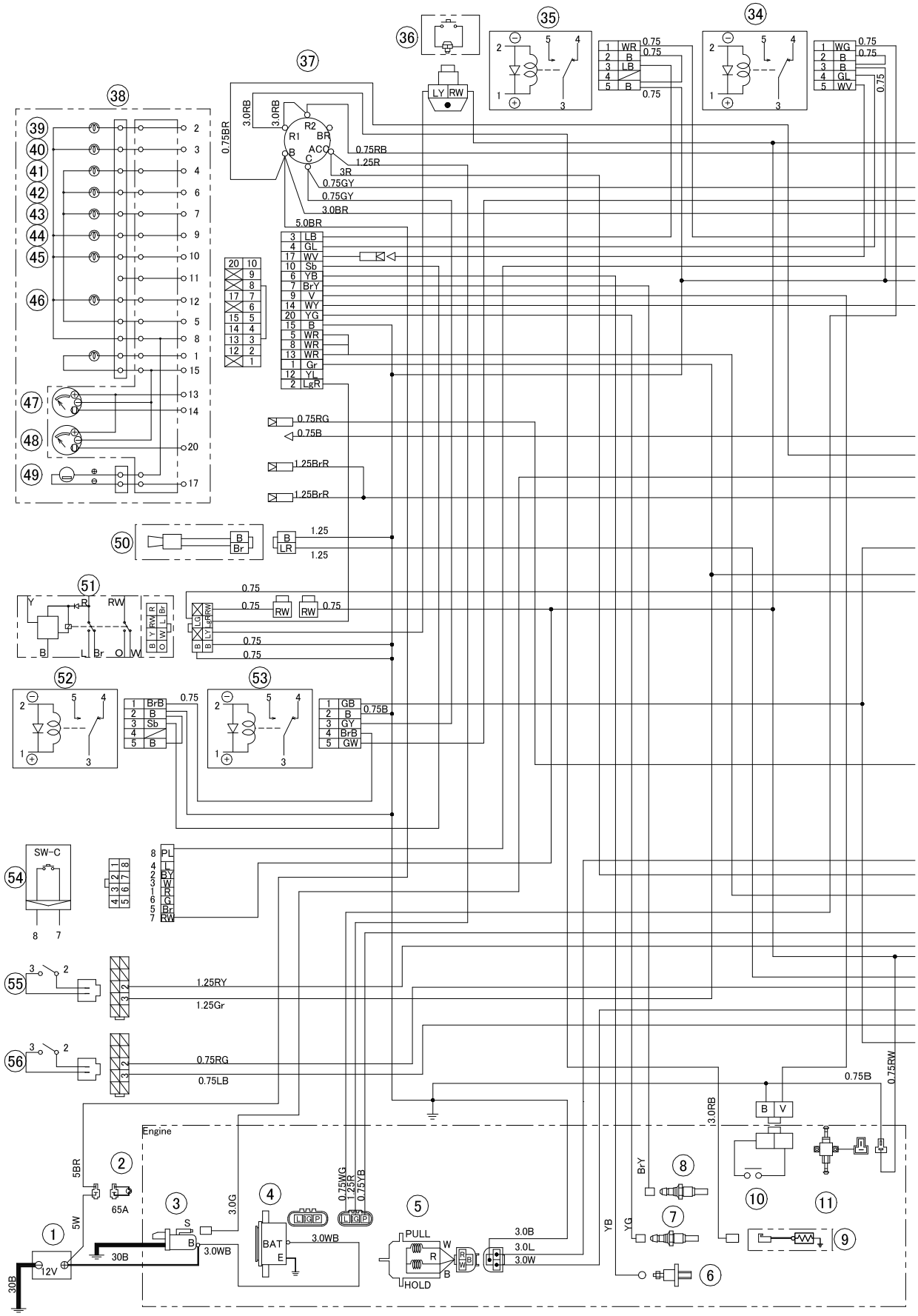

https://truckmanualshub.com/

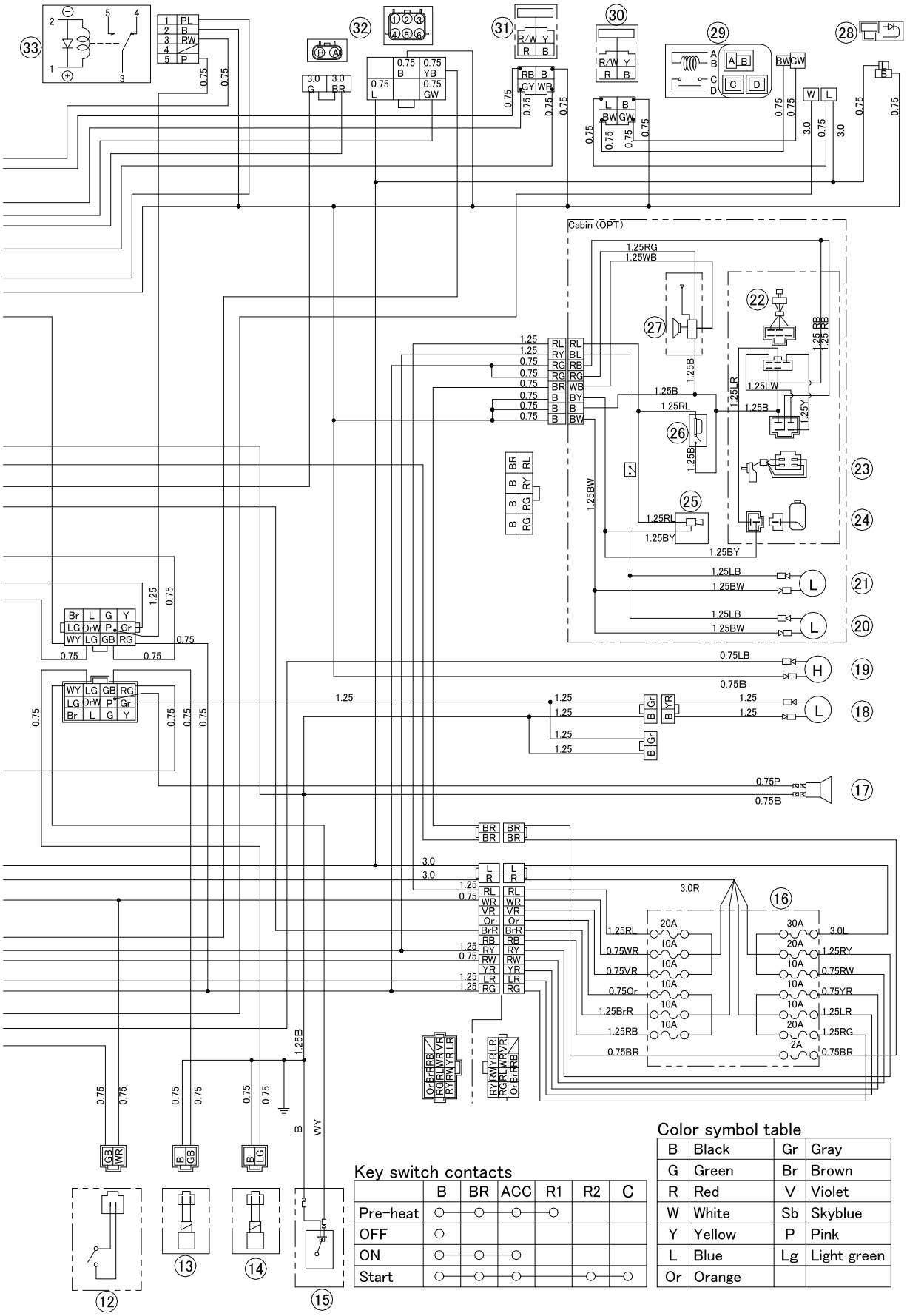

	B	BR	ACC	R1	R2	C
Pre-heat	○	○	○	○		
OFF	○					
ON	○	○	○			
Start	○	○	○		○	○

B	Black	Gr	Gray
G	Green	Br	Brown
R	Red	V	Violet
W	White	Sb	Skyblue
Y	Yellow	P	Pink
L	Blue	Lg	Light green
Or	Orange		

https://truckmanualshub.com/

ELECTRIC SYSTEM DIAGRAM (OPTION)

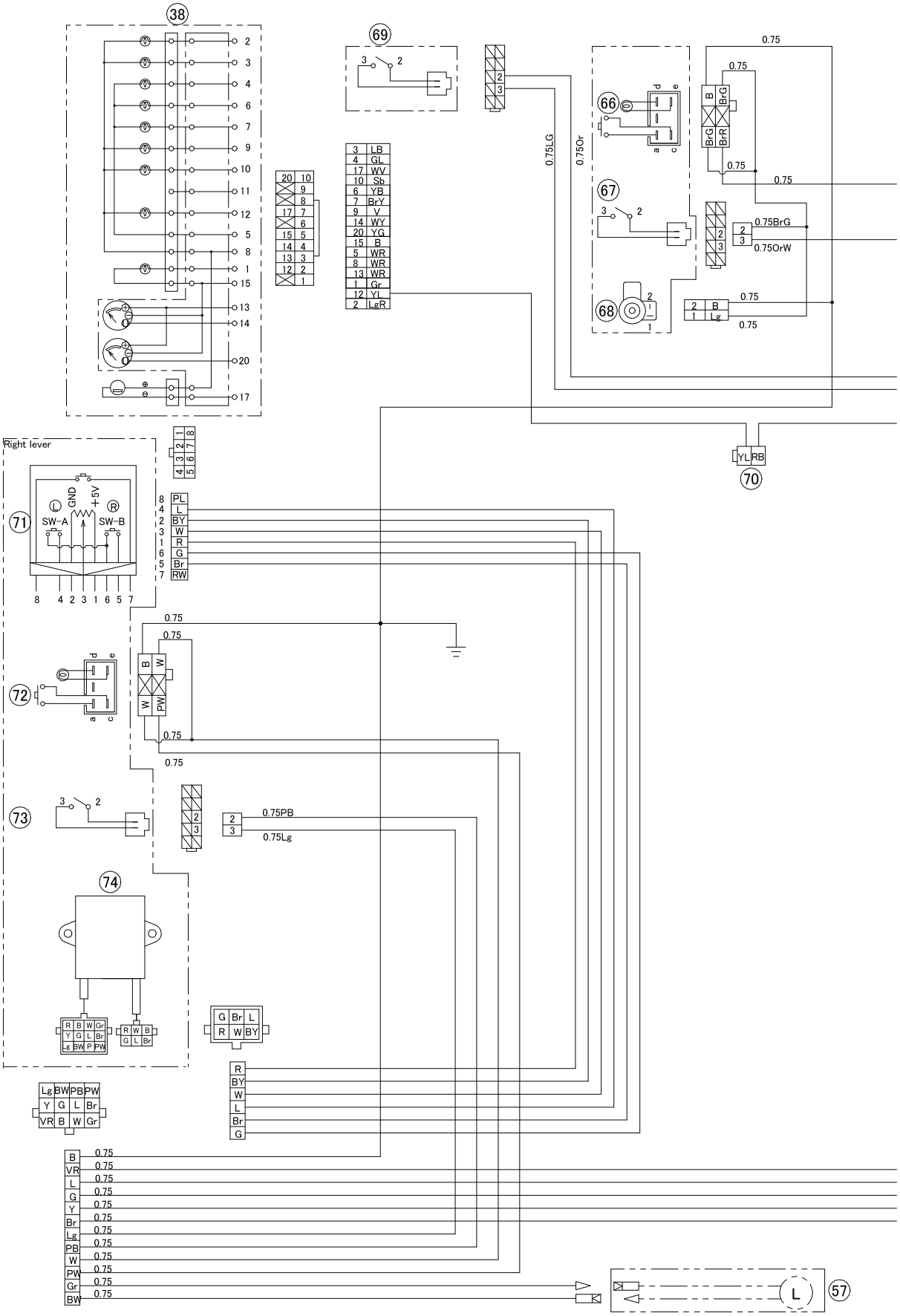

https://truckmanualshub.com/

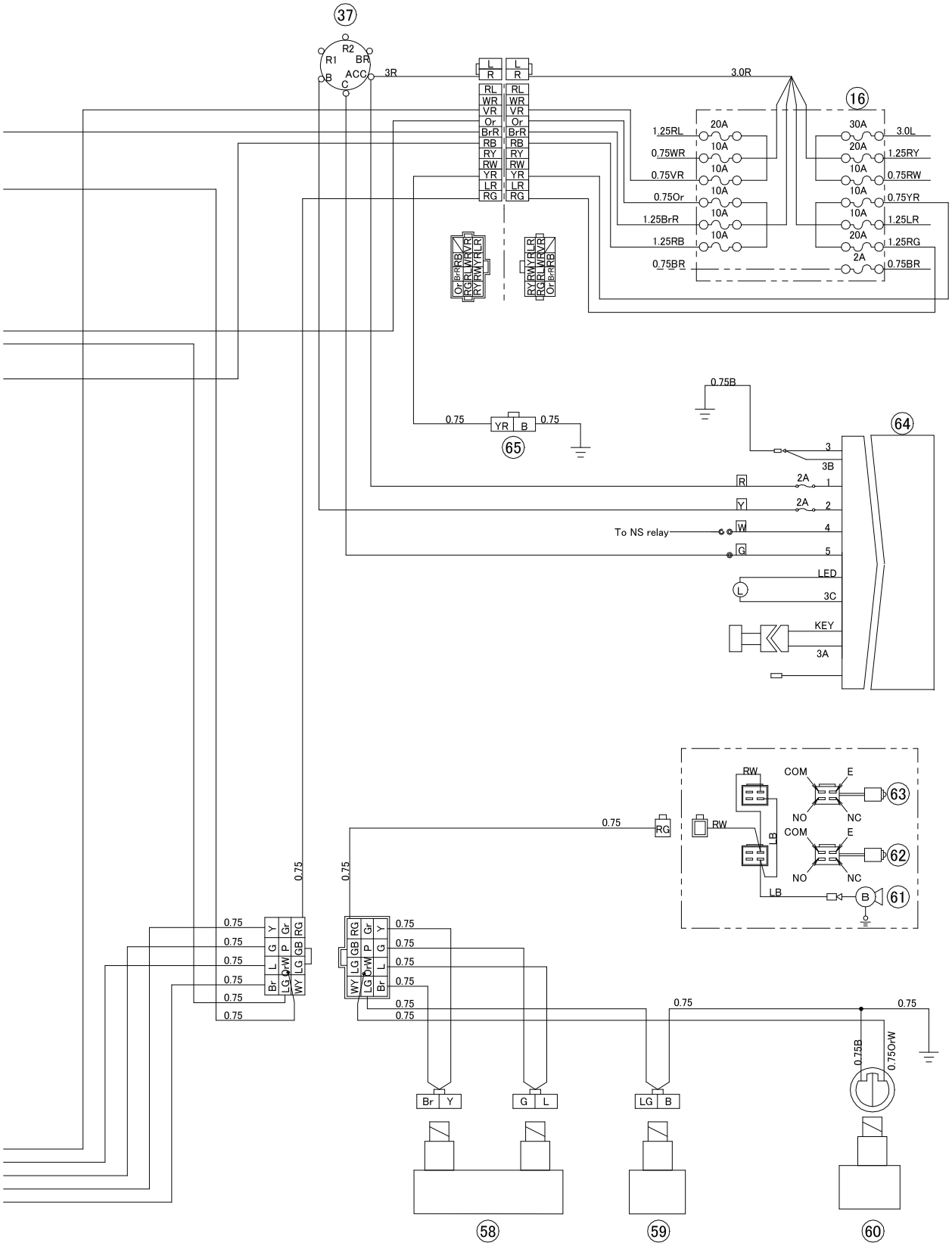

Note : Unless otherwise specified, the wire thickness is AVSS-0.5.

https://truckmanualshub.com/

No.	Name	No.	Name
1	Battery	38	OK monitor
2	Fusible link (65A)	39	Travel speed lamp
3	Starting motor	40	Glow lamp
4	Alternator	41	Battery charge warning lamp
5	Engine stop solenoid	42	Engine oil pressure warning lamp
6	Engine oil pressure switch	43	Not used
7	Water temperature sensor (gauge)	*44	Water separator warning lamp
8	Not used	45	Gate lock lamp
9	Glow plug	*46	One-touch decel lamp
*10	Warter separator sensor	47	Fuel gauge
11	Fuel pump	48	Water temperature gauge
12	Gate lock limit switch	49	Hour meter
13	Gate lock solenoid	50	Power outlet
14	Travel speed select solenoid	51	Flip-flop relay
15	Fuel level sensor	52	Neutral start lamp relay
16	Fuse box	53	Neutral start relay
17	Horn	54	Horn switch
18	Boom light	55	Light switch
*19	Heater	*56	Heater switch
*20	Cab light	57	Error output (Proportional controller)
*21	Cab light	*58	1st PTO proportional solenoid
*22	Wiper switch	59	Not used
*23	Wiper	*60	3rd PTO solenoid
*24	Washer	*61	Travel alarm buzzer
*25	Cigarette lighter	*62	Travel alarm limit switch
*26	Room lamp	*63	Travel alarm limit switch
*27	Radio	*64	Immobilizer
28	Diode	*65	Power source (Crane specification)
29	Stop solenoid relay	*66	3rd PTO power switch
30	Timer (1sec)	*67	3rd PTO operation switch
31	Timer (4sec)	*68	3rd PTO alarm buzzer
32	Safety relay	69	Not used
33	Horn relay	*70	One-touch decel switch
34	Hour meter relay	*71	1st PTO right lever switches
35	Glow lamp relay	*72	1st PTO hold switch
36	Travel speed select switch	*73	1st PTO slow mode switch
37	Engine key switch	*74	1st PTO proportional controller

The devices with the * marks are optional devices.

https://truckmanualshub.com/

TIGHTEN BOLTS

Retighten loose bolts in daily inspection. Be sure to make up for lacking bolts. Check and retighten the bolts after the first 50 hours if a new machine is used.

Special Tightening Positions

The bolts shown below bear large forces. Tighten them at the torque shown in the table below. When replacing the bolts in these positions, apply molybdenum disulfide grease to the threads and the bearing surfaces of the nuts and tighten at the specified torque.
As for the travel reduction gear and drive sprocket of the travel unit, apply thread lock cement to the threads of the bolts

1. Travel unit

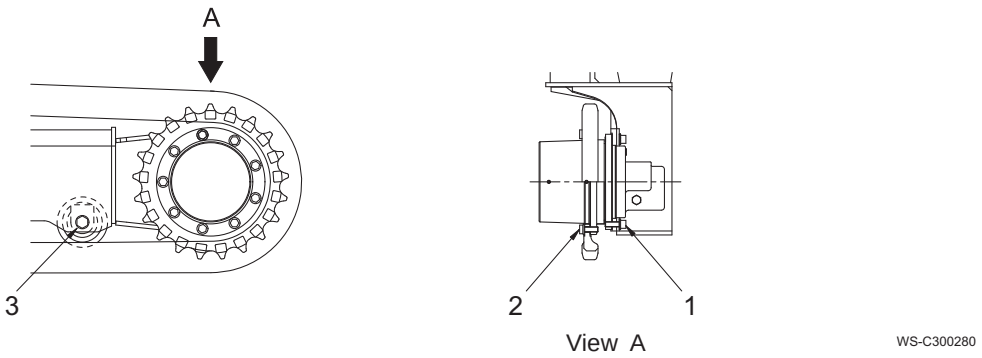

No.	Tightening position	Bolt size	Wrench size (mm)	Tightening torque	
				(N·m)	(kgf·m)
1	Travel reduction gear	M12	19	108	11.0
2	Drive sprocket	M12	19	108	11.0
3	Lower roller	M16	24	245	25.0

2. Swing unit

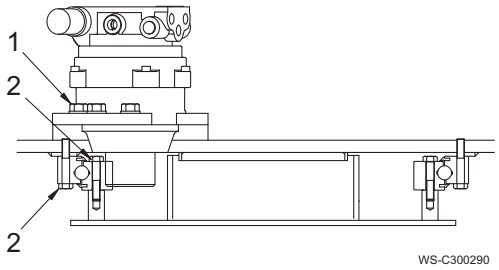

No.	Tightening position	Bolt size	Wrench size (mm)	Tightening torque	
				(N·m)	(kgf·m)
1	Swing motor	M12	19	108	11.0
2	Swing bearing	M12	19	108	11.0

https://truckmanualshub.com/

3. Engine

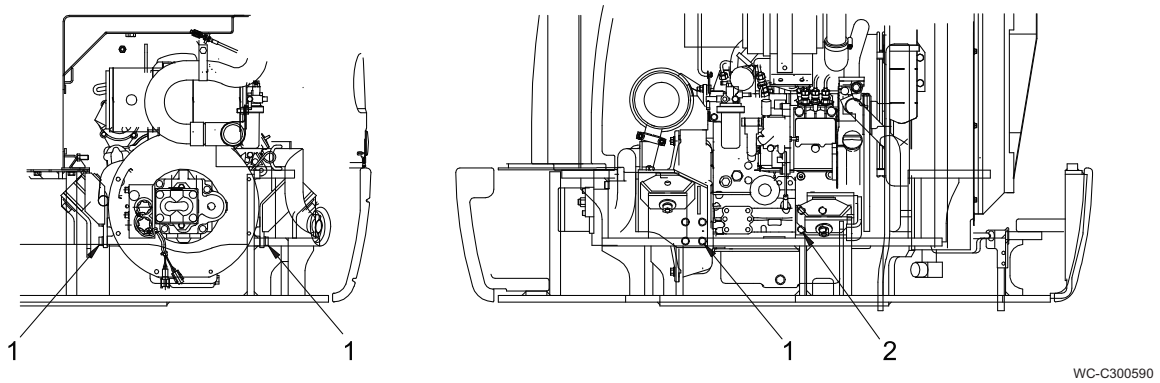

No.	Tightening position	Bolt size	Wrench size (mm)	Tightening torque	
				(N·m)	(kgf·m)
1	Engine bracket (rear)	M10	17	58.8	6.0
2	Engine bracket (front)	M10	17	68.6	7.0

4. Counterweight

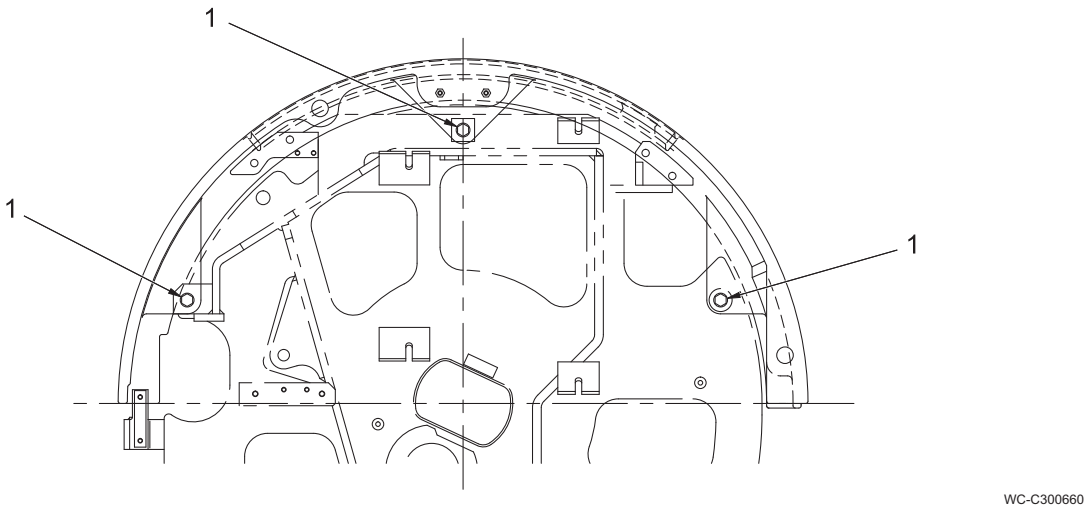

No.	Tightening position	Bolt size	Wrench size (mm)	Tightening torque	
				(N·m)	(kgf·m)
1	Counterweight	M16	24	241	24.6

https://truckmanualshub.com/

Standard Tightening Torques

Tighten the bolts and nuts in positions other than the special tightening positions at the torques shown below.

10T Heat-treatment bolts					
Bolt size	Wrench size (mm)	Coarse thread		Fine thread	
		(N·m)	(kgf·m)	(N·m)	(kgf·m)
M8	13	23	2.3	25	2.5
M10	17	47	4.8	50	5.1
M12	19	83	8.5	91	9.3
M14	22	134	13.7	135	13.8
M16	24	208	21.2	221	22.5
M20	30	411	41.9	452	46.1
M24	36	715	72.9	811	82.7

High-pressure hose union nut		
Hose size (inch)	(N·m)	(kgf·m)
1/4"	25	2.5
3/8"	49	5.0
1/2"	59	6.0
3/4"	118	12.0
1"	137	14.0
1-1/4"	167	17.0

https://truckmanualshub.com/

HANDLING IN COLD WEATHER

At low temperature, the engine hardly starts and coolant is subject to freezing. Make preparation for cold weather as shown below.

Fuel

In cold weather, fuel may be frozen and it may be difficult to start the engine.
Use fuel (light oil) appropriate for the temperature.

Coolant

LLC has been mixed in coolant of this machine before shipment.
A mark at a temperature on the label stuck behind the radiator shows the freezing point.
If the lowest temperature may be lower than it, refer to the antifreeze mixing ratio table and adjust the concentration.
Exchange the coolant every two years (in autumn every two years).

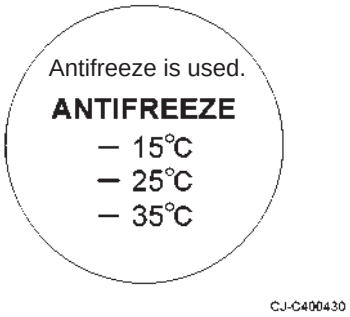

Lubricant and grease

Exchange engine oil and hydraulic oil with proper oil having viscosity appropriate for the outer temperature. Refer to RECOMMENDED LUBRICATION TABLE for the specified viscosity.

Battery

In cold weather, larger discharge current flows when starting the engine and the battery performance is also reduced. If the battery is almost discharged, battery liquid may be frozen.
Recharge the battery almost fully and keep it warm to start the engine free from troubles next morning.

Precautions when finishing work

- Remove mud and water from the cylinder rod to prevent the cylinder rod seals from being damaged.
- Put plates on dry and firm ground and park the machine on them in order to prevent the crawlers from freezing.
- Discharge water from the fuel tank to prevent fuel from freezing.

https://truckmanualshub.com/

LONG TERM STORAGE

NOTICE

To protect the cylinder rod from rust, set the machine to the posture for long term storage.

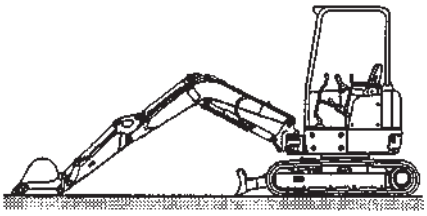

Posture for long term storage

WC-C300600

Before storage

- Clean the machine.
- Carry out lubrication, greasing and oil changing of each part.
- Apply grease to the exposed piston rods of the hydraulic cylinders.
- Dismount the batteries, recharge them fully, and store them. Alternatively, disconnect the negative terminals.

During storage

⚠ CAUTION

If you have to operate the machine indoors to prevent rust, keep good ventilation and gas poisoning by window or entrance.

- Warm up the machine and carry out traveling, swinging and a series of operations, including attachment operations, once every month to prevent rust and keep lubrication condition while the machine is not used for long.
- Wipe off grease from the hydraulic cylinder before moving the attachment.

After storage

- Check the lubrication and greasing conditions of each part and the coolant level.
- Wipe off grease from the hydraulic cylinder.
- Start the engine, warm it up, and carry out traveling, swinging and attachment operations several times repeatedly to run in each part.

https://truckmanualshub.com/

SPECIFICATIONS

https://truckmanualshub.com/

SPEED AND GRADEABILITY

Swing speed	10 min^{-1}
Travel speed (low/high)	2.3/4.5 km/h
Gradeability	58% (30 degrees)

ENGINE

Engine model	Yanmar 3TNV76-QIK
Type	Vertical in-line, water cooled, 4-cycle diesel engine (Ball-type swirl chamber)
No. of cyl. - bore x stroke	3-76 mm x 82 mm
Displacement	1.115 L
Max. rated output	13.5 kW / 2300 min^{-1}

MASS

		4-post canopy	2-post canopy	Cabin
Machine mass	Rubber shoe	2480 kg	2460 kg	2580 kg
	Steel shoe	2640 kg	2620 kg	2740 kg
Base machinery mass	Rubber shoe	1900 kg	1880 kg	2000 kg
	Steel shoe	2060 kg	2040 kg	2160 kg
Average ground bearing pressure	Rubber shoe	31 kPa	31 kPa	32 kPa
	Steel shoe	28 kPa	28 kPa	29 kPa

CAPACITY

Fuel		35 L
Hydraulic oil	Tank level	30 L
	Total quantity	43 L
Engine oil	Maximum	3.4 L
	Minimum	1.8 L
Coolant	Engine only	0.9 L
	Total quantity	4.0 L

https://truckmanualshub.com/

BUCKET

◎: Standard, ○: compatible, ×: not compatible

Bucket capacity (m^3)	Bucket width (mm)		No. of teeth	Mass (kg)	Compatibility		Category	Applied specification
Heaped	With side cutter	Without side cutter			Standard arm	Long arm		
0.08	500	470	4	72	◎	×	Standard	General digging
0.04	-	250	2	45	○	○	OPT	Ditching
0.05	-	320	3	54	○	○	OPT	Ditching
0.06	400	370	3	61	○	◎	OPT	(Long arm)
0.07	450	420	3	65	○	×	OPT	Ditching
0.08	500	470	4	75	○	×	OPT	(Reinforced)
0.09	550	520	4	75	○	×	OPT	Loading

https://truckmanualshub.com/

DIMENSIONS

Rubber shoe specification

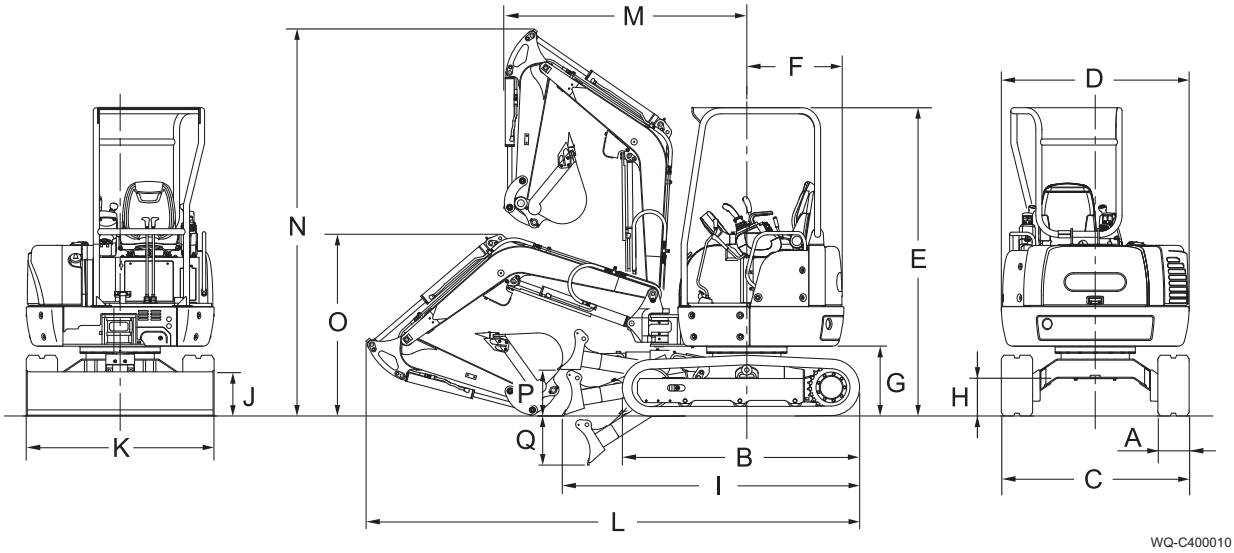

Unit: mm

Symbol	Item		4-post canopy	2-post canopy	Cabin
A	Crawler shoe width		250	250	250
B	Crawler overall length		1895	1895	1895
C	Crawler overall width		1500	1500	1500
D	Upper structure overall width		1500	1500	1500
E	Overall height of base machine		2460	2470	2470
F	Swing radius		775	775	775
G	Clearance height under upper structure		560	560	560
H	Ground clearance of undercarriage		300	300	300
I	Undercarriage overall length		2370	2370	2370
J	Blade height		365	365	365
K	Blade width		1500	1500	1500
L	Overall length	Blade forward	3940	3940	3940
		Blade backward	4510	4510	4510
M	Minimum radius of equipment and attachment		1940	1640	1940
N	Overall height at minimum radius of equipment and attachment		3090	3290	3090
O	Attachment height in transport posture		1450	1450	1450
P	Blade maximum lifting		370	370	370
Q	Blade maximum lowering		390	390	390

Steel shoe specification

https://truckmanualshub.com/

Steel shoe specification

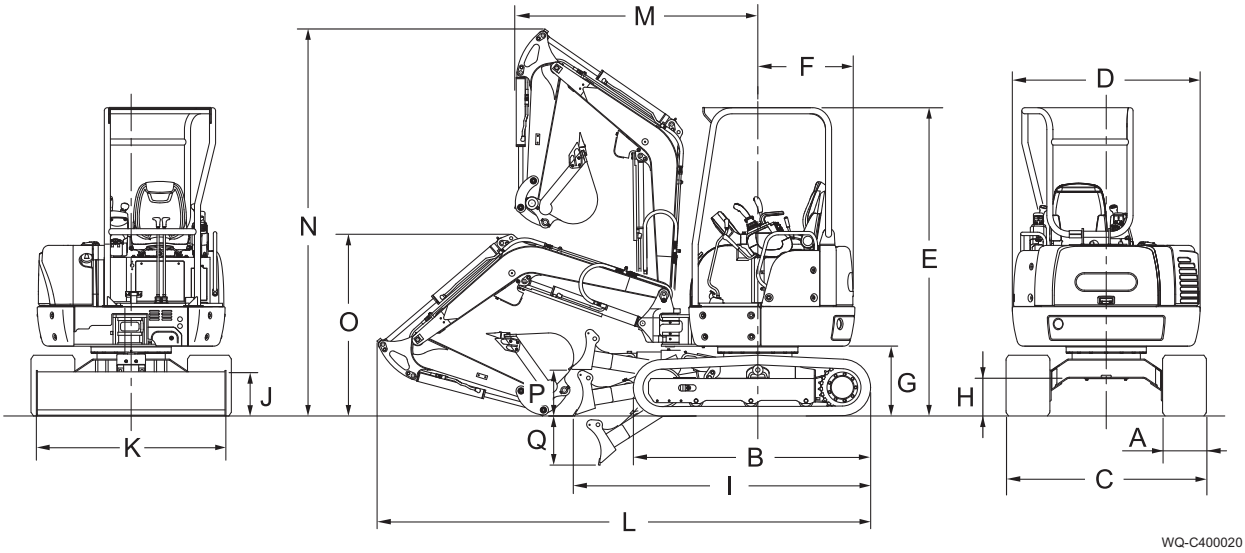

Unit: mm

Symbol	Item		4-post canopy	2-post canopy	Cabin
A	Crawler shoe width		300	300	300
B	Crawler overall length		1920	1920	1920
C	Crawler overall width		1550	1550	1550
D	Upper structure overall width		1500	1500	1500
E	Overall height of base machine		2470	2480	2480
F	Swing radius		775	775	775
G	Clearance height under upper structure		570	570	570
H	Ground clearance of undercarriage		310	310	310
I	Undercarriage overall length		2380	2380	2380
J	Blade height		365	365	365
K	Blade width		1500	1500	1500
L	Overall length	Blade forward	3940	3940	3940
		Blade backward	4510	4510	4510
M	Minimum radius of equipment and attachment		1940	1640	1940
N	Overall height at minimum radius of equipment and attachment		3090	3290	3090
O	Attachment height in transport posture		1450	1450	1450
P	Blade maximum lifting		370	370	370
Q	Blade maximum lowering		390	390	390

https://truckmanualshub.com/

WORKING RANGE

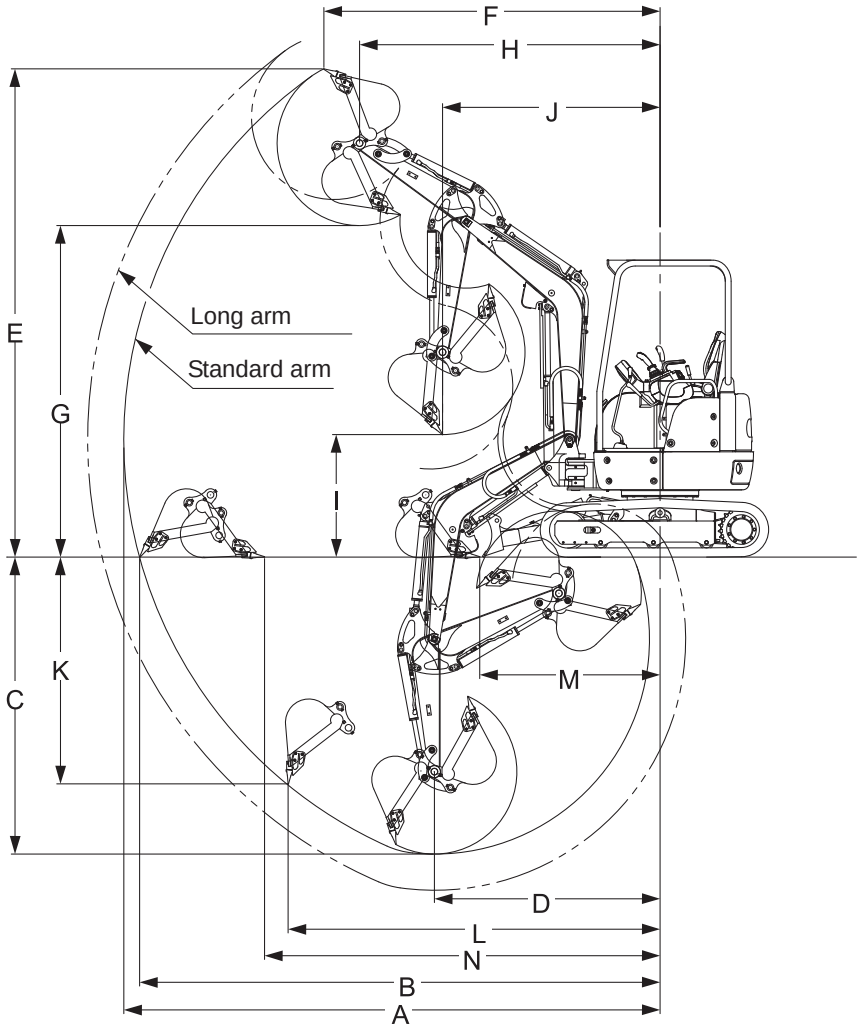

Unit: mm

Symbol	Name	4-post canopy/cabin		2-post canopy/cabin	
		Standard arm	Long arm	Standard arm	Long arm
A	Maximum reach	4500	4750	4500	4570
B	Maximum reach at ground reference plane	4330	4630	4330	4630
C	Maximum digging depth	2520	2820	2520	2820
D	Reach at maximum digging depth	1870	1870	1870	1870
E	Maximum height of cutting edge	4050	4280	4560	4830
F	Reach at maximum height	2790	2980	1650	1750
G	Maximum dumping height	2750	2970	3200	3470
H	Reach at maximum dumping height	2490	2710	1570	1700
I	Minimum dumping height	1020	730	1330	1090
J	Reach at minimum dumping height	1800	1910	1500	1690
K	Maximum vertical digging depth	1950	2220	1950	2220
L	Reach at maximum vertical digging depth	3090	3140	3090	3140
M	Minimum level floor radius	1500	1450	1500	1450
N	Maximum level floor radius	3280	3580	3280	3580

https://truckmanualshub.com/

WORKING RANGE FOR OFFSET DIGGING

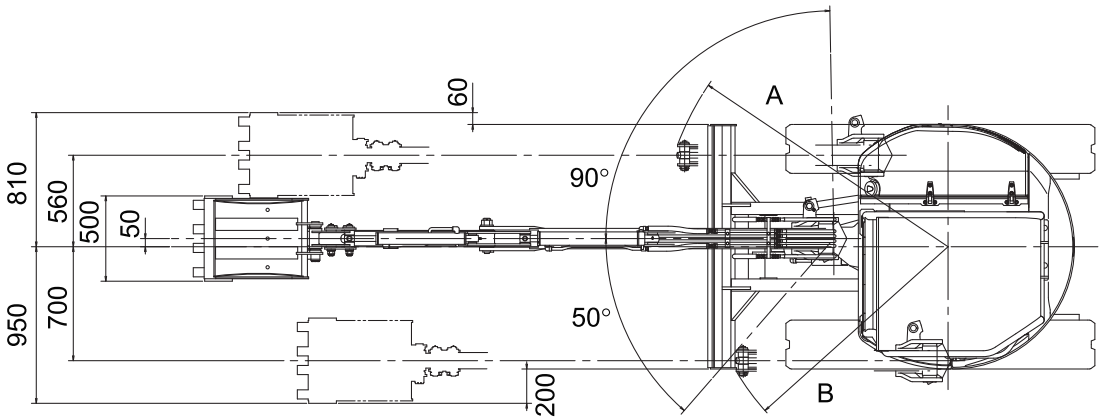

WQ-C400040

Unit: mm

			4-post canopy/cabin	2-post canopy
Minimum radius of equipment at maximum front offset	A	Left boom swing	1770	1500
	B	Right boom swing	1510	1260

https://truckmanualshub.com/

2011 年 5 月　初版発行
First Edition, May 2011
2011 年 12 月　第 2 版発行
Second Edition, December 2011

不許複製
All rights reserved.

25VX3

取　扱　説　明　書
OPERATION MANUAL

編集及び発行所
IHI建機株式会社 プロダクトサポート部
Editing & Publishing Office.
IHI Construction Machinery Limited
Product Support Department
〒236-8611 神奈川県横浜市金沢区昭和町 3174
3174 Showa-machi, Kanazawa-ku, Yokohama, Kanagawa 236-8611 Japan