https://truckmanualshub.com/

Sno-Thro®

Parts Manual

Models

921011 - Deluxe 24
921012 - Deluxe 27
921013 - Deluxe 30
921014 - Deluxe Track 24
921015 - Deluxe Track 27
921016 - Deluxe Track 30
921017 - Deluxe 24
921018 - Deluxe 30
921019 - Deluxe 24
921020 - Deluxe 30
921305 - Deluxe 24
921306 - Deluxe 27
921307 - Deluxe 30
921311 - Deluxe Track 24
921312 - Deluxe Track 27

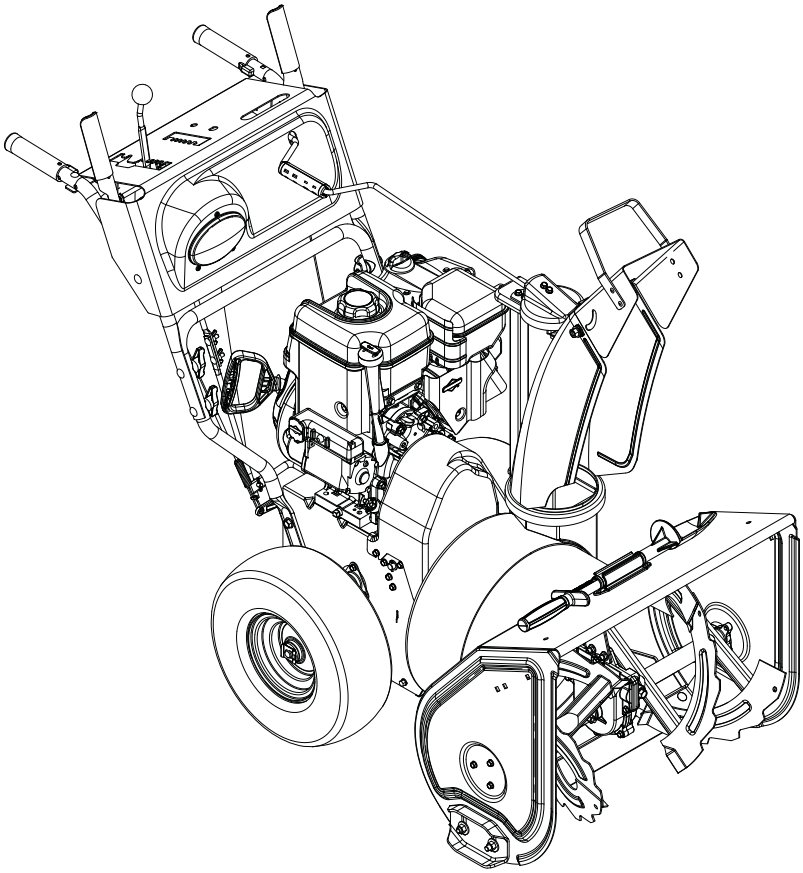

03882800A 9/09
Printed in USA

https://truckmanualshub.com/

The Manual

Before you operate your unit, carefully and completely read manuals supplied with the unit. The contents will provide you with an understanding of safety instructions and controls during normal operation and maintenance.

For your safety and the safety of others always read, understand, and follow all DANGER, WARNING, and CAUTION messages found in manuals and on safety decals.

Hardware descriptions are given in decimals.

Decimals to Fractions			
.063	1/16	.563	9/16
.125	1/8	.625	5/8
.188	3/16	.688	11/16
.250	1/4	.750	3/4
.313	5/16	.813	13/16
.375	3/8	.875	7/8
.438	7/16	.938	15/16
.500	1/2	1.00	1

Service and Replacement Parts

When ordering replacement parts or making service inquiries, know the Model and Serial numbers of your unit and engine.

Numbers are located on the product registration card in the unit literature package. They are printed on a serial number label, located on the frame of your unit.

• Record Unit Model and Serial numbers here:

• Record Engine Model and Serial numbers here:

UNAUTHORIZED REPLACEMENT PARTS

Use only Ariens replacement parts. The replacement of any part on this vehicle with anything other than an Ariens authorized replacement part may adversely affect the performance, durability, or safety of this unit and may void the warranty. Ariens disclaims liability for any claims or damages, whether warranty, property damage, personal injury or death arising out of the use of unauthorized replacement parts.

Product Registration

The Ariens dealer must register the product at the time of purchase. Registering the product will help the company process warranty claims or contact you with the latest service information. All claims meeting requirements during the limited warranty period will be honored, whether or not the product registration card is returned. Keep a proof of purchase if you do not register your unit.

Customer Note: If Dealer does not register your product, please fill out, sign and return the product registration card to Ariens or go to www.ariens.com.

Your Satisfaction Is Important

Questions? Please follow these helpful steps:

1. Refer to the manuals supplied with your unit.

They will guide you through safe and proper operation and maintenance.

They contain specifications on your unit.

If your questions are not answered in these manuals, go to step number two.

2. Contact Your Dealer.

Our dealers will be happy to supply any service or advice required to keep your unit operating at peak efficiency.

A factory trained staff is available to support your equipment needs. They stock genuine Ariens parts and lubricants manufactured with the same precision and skill as the original.

If your questions are not resolved by the support staff, ask for the manager or owner.

When contacting your Dealer supply your model and serial numbers.

TO SPEED PARTS ORDERING:

1. Know the model and serial numbers of your unit.
2. Know the part number required.
3. Know the quantity required.
4. Know the part description.

https://truckmanualshub.com/

MODELS

Domestic

Model 921011 (Deluxe 24)
24” Sno-Thro, Electric Start
Serial No. 000101 and up

Model 921012 (Deluxe 27)
27” Sno-Thro, Electric Start
Serial No. 000101 and up

Model 921013 (Deluxe 30)
30” Sno-Thro, Electric Start
Serial No. 000101 and up

Model 921014 (Deluxe 24)
24” Sno-Thro, Track, Electric Start
Serial No. 000101 and up

Model 921015 (Deluxe 27)
27” Sno-Thro, Track, Electric Start
Serial No. 000101 and up

Model 921016 (Deluxe 30)
30” Sno-Thro, Track, Electric Start
Serial No. 000101 and up

Model 921017 (Deluxe 24)
24” Sno-Thro, Electric Start
Serial No. 000101 and up

Model 921018 (Deluxe 30)
30” Sno-Thro, Electric Start
Serial No. 000101 and up

Model 921019 (Deluxe 24)
24” Sno-Thro, Electric Start
Serial No. 000101 and up

Model 921020 (Deluxe 30)
30” Sno-Thro, Electric Start
Serial No. 000101 and up

International

Model 921305 (Deluxe 24)
24” Sno-Thro, Electric Start
Serial No. 000101 and up

Model 921306 (Deluxe 27)
27” Sno-Thro, Track, Electric Start
Serial No. 000101 and up

Model 921307 (Deluxe 30)
30” Sno-Thro, Electric Start
Serial No. 000101 and up

Model 921311 (Deluxe 24)
24” Sno-Thro, Track, Electric Start
Serial No. 000101 and up

Model 921312 (Deluxe 27)
27” Sno-Thro, Track, Electric Start
Serial No. 000101 and up

https://truckmanualshub.com/

Table Of Contents

Decals

Decals 5

Engine and Drive

Engine and Belt Drive 7
Friction Drive 11
Wheels and Axles 13

Frame and Housing

Handlebars and Controls. 19
Handlebars, Lever Controls, Panel and Dash 21
Cables and Controls 23
Chute and Auger 25
Discharge Chute 27
Gear Case-Aluminum 30

Electrical

Electrical and Wiring Diagram 31

https://truckmanualshub.com/

Decals

Model 921011, 014, 019

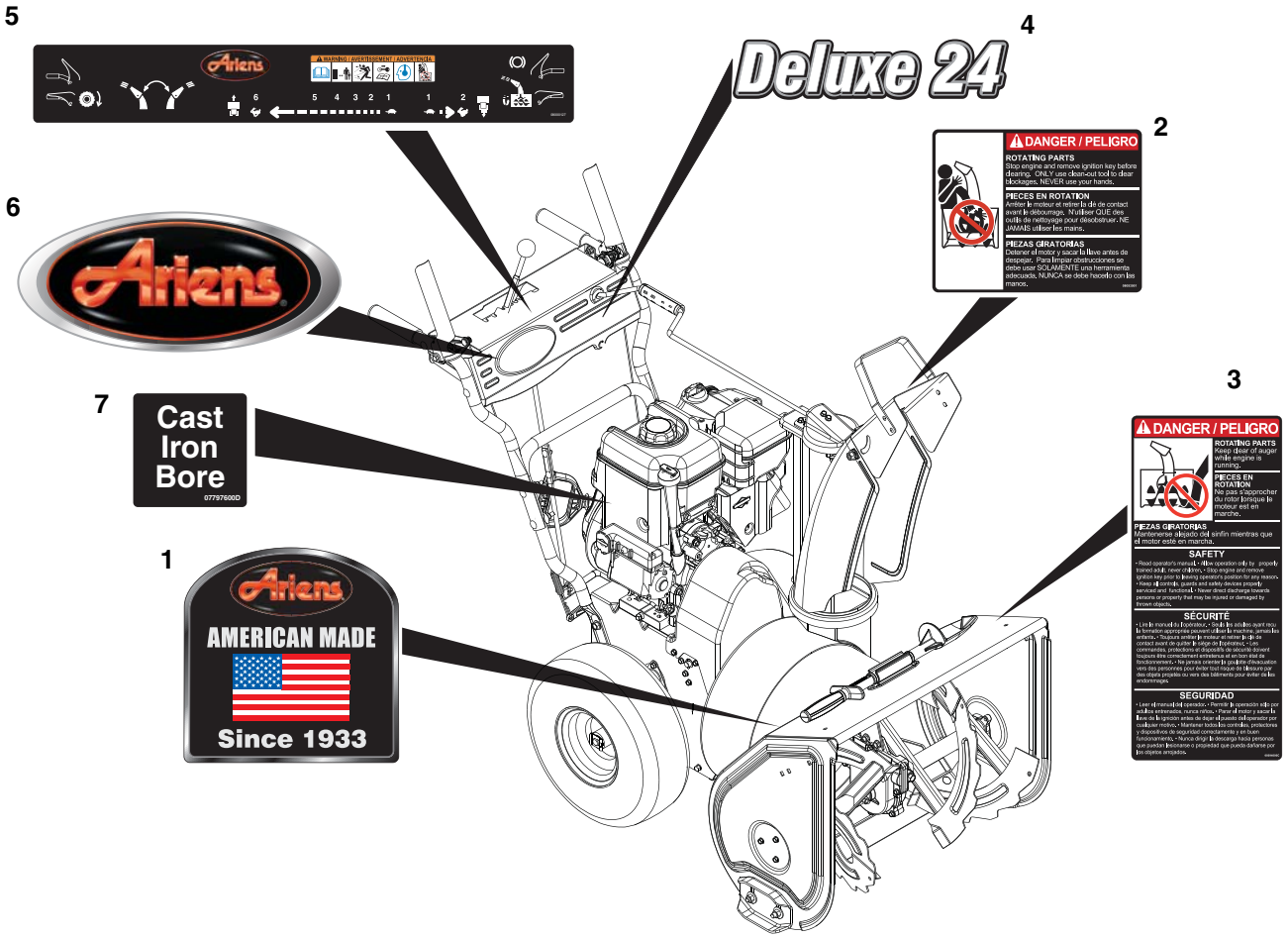

PS0320

Item	Part No.	Qty.	Description
1	08000407	1	Decal, Ariens Since 1933
2	08093901	1	Decal, Danger- Rotating Parts
3	08094000	1	Decal, Danger
4	08000332	1	Decal, Deluxe 24
5	08000127	1	Decal, Control Panel (011, 019)
	08000208	1	Decal, Control Panel (014)
6	08000327	1	Decal, Ariens Jewel
7	07797600	1	Decal, Cast Iron Bore (019)

https://truckmanualshub.com/

Decals

Model 921012, 013, 015, 016, 017, 018, 020, 305, 306, 307, 311, 312

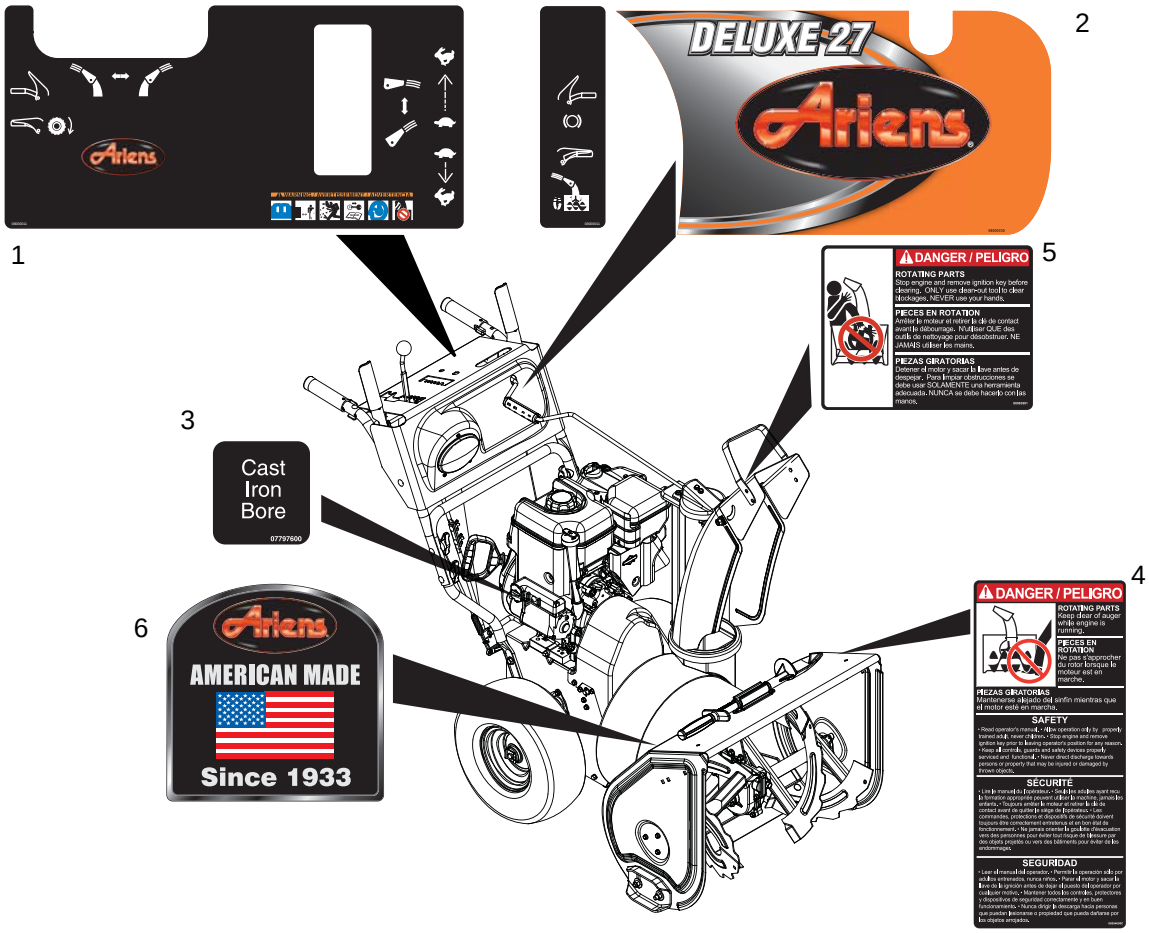

Item	Part No.	Qty.	Description
1	08000238	1	Decal, Control, w/Crank, Remote, Clicker (013, 020)
	08000206	1	Decal, Control w/Crank (012)
	08000308	1	Decal, Control Track, w/Crank, Manual (015)
	08000307	1	Decal, Control Track, w/Crank, Remote (016, 311,312)
	08000129	1	Decal, Control w/Heated Hand Grips(017, 018)
	08000326	1	Decal, Control w/Crank, Manual (305)
	08000239	1	Decal, Control w/Crank, Remote (306, 307)
2	08000330	1	Decal, Front Dash - Deluxe 27 (012, 015, 306, 312)
	08000331	1	Decal, Front Dash - Deluxe 30 (013, 016, 020, 307)
	08000328	1	Decal, Front Dash - Deluxe 24, Platinum Series (017)
	08000329	1	Decal, Front Dash - Deluxe 30, Platinum Series (018)
	08000339	1	Decal, Front Dash - Deluxe 24 (305, 311)
3	07797600	1	Decal, Cast Iron Bore (020)
4	08094000	1	Decal, Danger
5	08093901	1	Decal, Danger- Rotating Parts
6	08000407	1	Decal, Ariens Since 1933

https://truckmanualshub.com/

Engine and Belt Drive

Model All

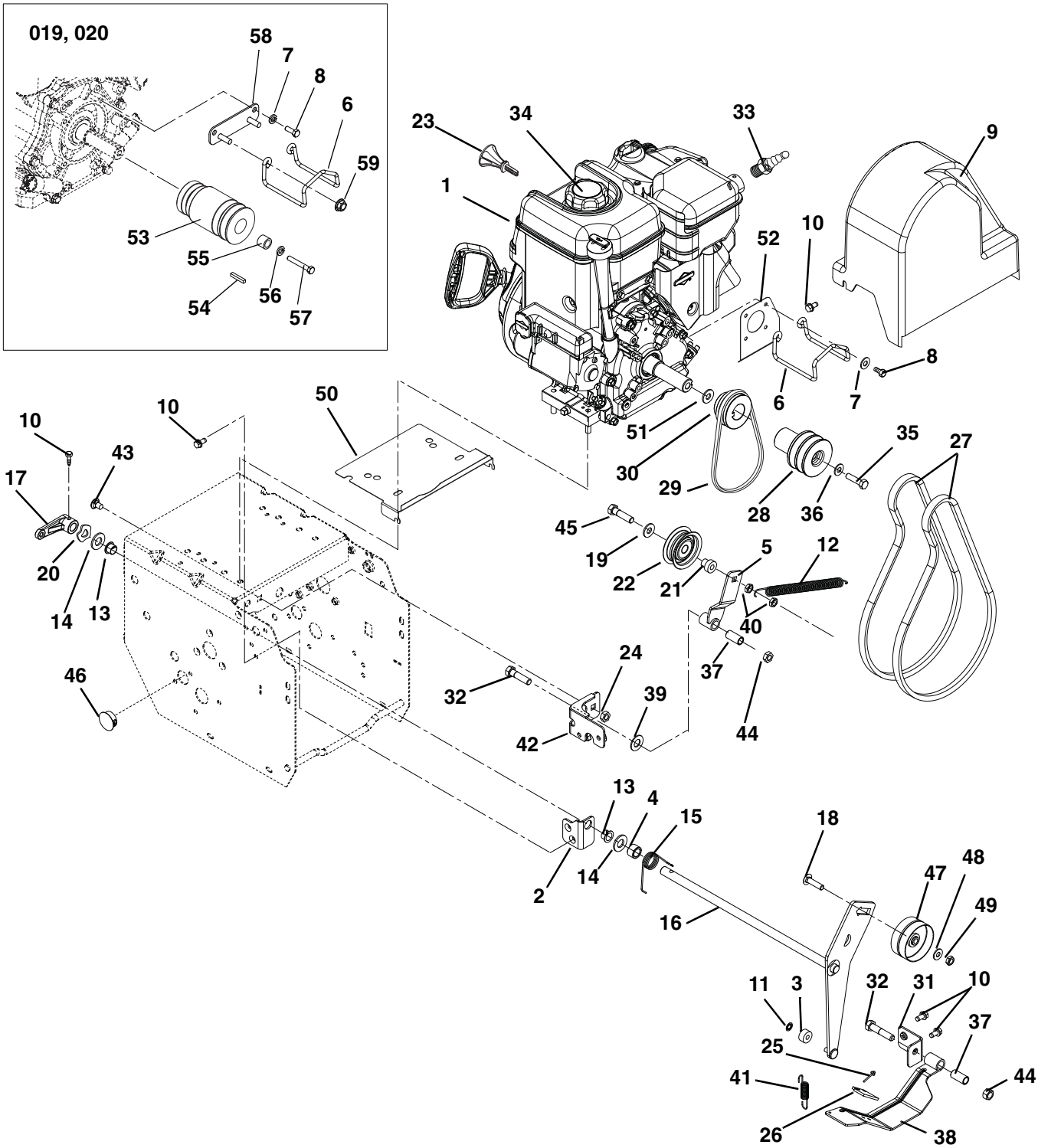

https://truckmanualshub.com/

ENGINE AND BELT DRIVE

Model All

Item	Part No.	Qty.	Description
1	08200513	1	Engine, Briggs and Stratton Snow 1150 Series, 120V (011 - SN 000101 - 003000, 012 - SN 000101 - 003499)
	08200508	1	Engine, Briggs and Stratton Snow 1150 Series, 120V (011 - SN 003001 and up, 012 - SN 003500 and up, 014, 015, 017)
	08200509	1	Engine, Briggs and Stratton Snow 1450 Series, 120V (013, 016)
	08200510	1	Engine, Briggs and Stratton Snow 1650 Series, 120V (018)
	08200515	1	Engine, Subaru SX21 Snow Recoil (019)
	08200516	1	Engine, Subaru SX30 Snow 120V (020)
	08200502	1	Engine, Briggs and Stratton Snow 1150, 240V (305, 311)
	08200503	1	Engine, Briggs and Stratton Snow 1450, 240V (306, 312)
	08200504	1	Engine, Briggs and Stratton Snow 1650, 240V (307)
2	00495051	1	Bracket, Mount- Idler Arm
3	05500037	1	Bushing, Sleeve
4	05500107	1	Bushing, Sleeve
5	00493600	1	Weldment, Traction Idler Arm
6	03882100	1	Belt Finger
7	06307400	2	Washer, Locking .312 x .097 Heavy
8	05947300	2	Bolt, Hex .31-24 x .75 Grade 5
9	00659600	1	Belt Cover (011, 012, 013, 014, 015, 016, 017, 018, 019, 305, 306, 307, 311, 312)
	03965600	1	Belt Cover (020)
10	07400034	7	Screw, Tapping Hex Washer Head .25-20 x .50
11	05717600	1	Ring, Retaining External .250 x .010
12	08316400	1	Spring, Extension
13	05500026	2	Bushing, Polyliner .50 Split
14	06425300	2	Washer, Flat Steel .531 x 1.00 x .063
15	08300326	1	Spring, Torsion
16	02956700	1	Weldment, Attachment Idler Arm
17	01987100	1	Arm, Clutch - Attachment
18	06200111	1	Bolt, Round Head Square Short Neck .38-16 x 1.75
19	06435700	1	Washer, Flat Steel .38 x .875 x .083
20	06400005	1	Washer, Wave .50 x .75 x .015, .13 Free Height
21	01213100	1	Spacer, Bearing
22	02457400	1	Idler
23	07500114	1	Key, Push/Pull Briggs & Stratton (011, 012, 013, 014, 015, 016, 017, 018, 305, 306, 307, 311, 312)
	07500117	1	Key, Push/Pull Subaru (019, 020)
24	06543100	1	Nut, Locking-Top-Flange .31-18
25	06800028	2	Rivet, Pop .187 (Included with item 38)
26	00180500	1	Pad, Brake (Included with item 38)
27	07200514	1	V-Belt, HA Matched Set (011, 012, 013, 014, 015, 016, 017, 018, 019, 305, 306, 307, 311, 312)
	07200521	1	V-Belt, HA Matched Set (020)
28	03876300	1	Sheave, Attachment 2 Groove (011, 012, 013, 014, 015, 016, 017, 018, 305, 306, 307, 311, 312)
29	07200111	1	V-Belt 3L (011, 012, 013, 014, 015, 016, 017, 018, 019, 305, 306, 307, 311, 312)
	07200522	1	V-Belt 3L (020)
30	00659400	1	Sheave, Drive (011, 012, 013, 014, 015, 016, 017, 018, 305, 306, 307, 311, 312)
31	00657551	1	Bracket, Brake Mount
32	05958500	2	Bolt, Hex .38-16 x 1.75 Grade 5
33	21547500	1	Plug, Spark (011, 012, 013, 014, 015, 016, 017, 018, 305, 306, 307, 311, 312)
	21547200	1	Plug, Spark (019, 020)
34	07500115	1	Cap, Fuel Briggs and Stratton (011, 012, 013, 014, 015, 016, 017, 018, 305, 306, 307, 311, 312)
	07500116	1	Cap, Fuel Subaru (019, 020)
35	05901307	1	Bolt, Hex .38-24 x 2.25 Grade 5 (011, 012, 013, 014, 015, 016, 017, 018, 305, 306, 307, 311, 312)
36	06308800	1	Washer, Locking .38 x .094 (011, 012, 013, 014, 015, 016, 017, 018, 305, 306, 307, 311, 312)
37	05500106	2	Bushing , Sleeve
38	52000500	1	Brake Arm w/Pad (Includes items 25 and 26)
39	06436200	1	Washer, Flat-Steel .406 x .812 x .065
40	06500011	2	Nut, Locking-Center Jam .31-18

https://truckmanualshub.com/

Model All

41	08300103	1	Spring, Extension
42	00657059	1	Weldment, Frame Bracket
43	06212200	1	Bolt, Round Head Square Short Neck .31-18 x .62
44	06542000	2	Nut, Locking-Top-Flange .38-16
45	05952400	1	Bolt, Hex .31-18 x 1.50 Grade 5
46	07500023	2	Plug, Hole .875" Nylon (011, 012, 013, 017, 018, 019, 020, 305, 306, 307)
47	07300515	1	Idler, Flat
48	06435700	1	Washer, Flat-Steel .38 x .875 x .083
49	06537200	1	Nut, Locking-Jam-Center .375-16
50	03880851	1	Baffle (011, 012, 014, 015, 017, 019, 305, 311)
	03880751	1	Baffle (013, 016, 018, 020, 306, 307, 312)
51	06443000	1	Washer, Flat-Steel 1.062 x 2.0 x .134 (013, 016, 018, 020, 306, 307, 312)
52	03815251	1	Baffle, Engine (013, 016, 018, 306, 307, 312)
53	03972900	1	Sheave, Engine (019)
	03974300	1	Sheave, Engine (020)
54	06609600	1	Key, Square .186 x 1.50 (019)
	06610300	1	Key, Square .25 x 2.25 (020)
55	03973000	1	Bushing, Sleeve (019)
	05500938	1	Bushing, Spacer (020)
56	06307400	1	Washer, Locking .312 x .097 (019)
	06309300	1	Washer, Locking .44 x .109 (020)
57	05901416	1	Bolt, Hex .31-24 x 2.50 Grade 5 (019)
	05900039	1	Bolt, Hex .44-20 x 1.50 Grade 5 (020)
58	03964600	1	Plate, Belt Finger Mount (020)
59	06543100	2	Nut, Locking Top Flange .31-18 (020)

https://truckmanualshub.com/

NOTES

https://truckmanualshub.com/

FRICTION DRIVE

Model All

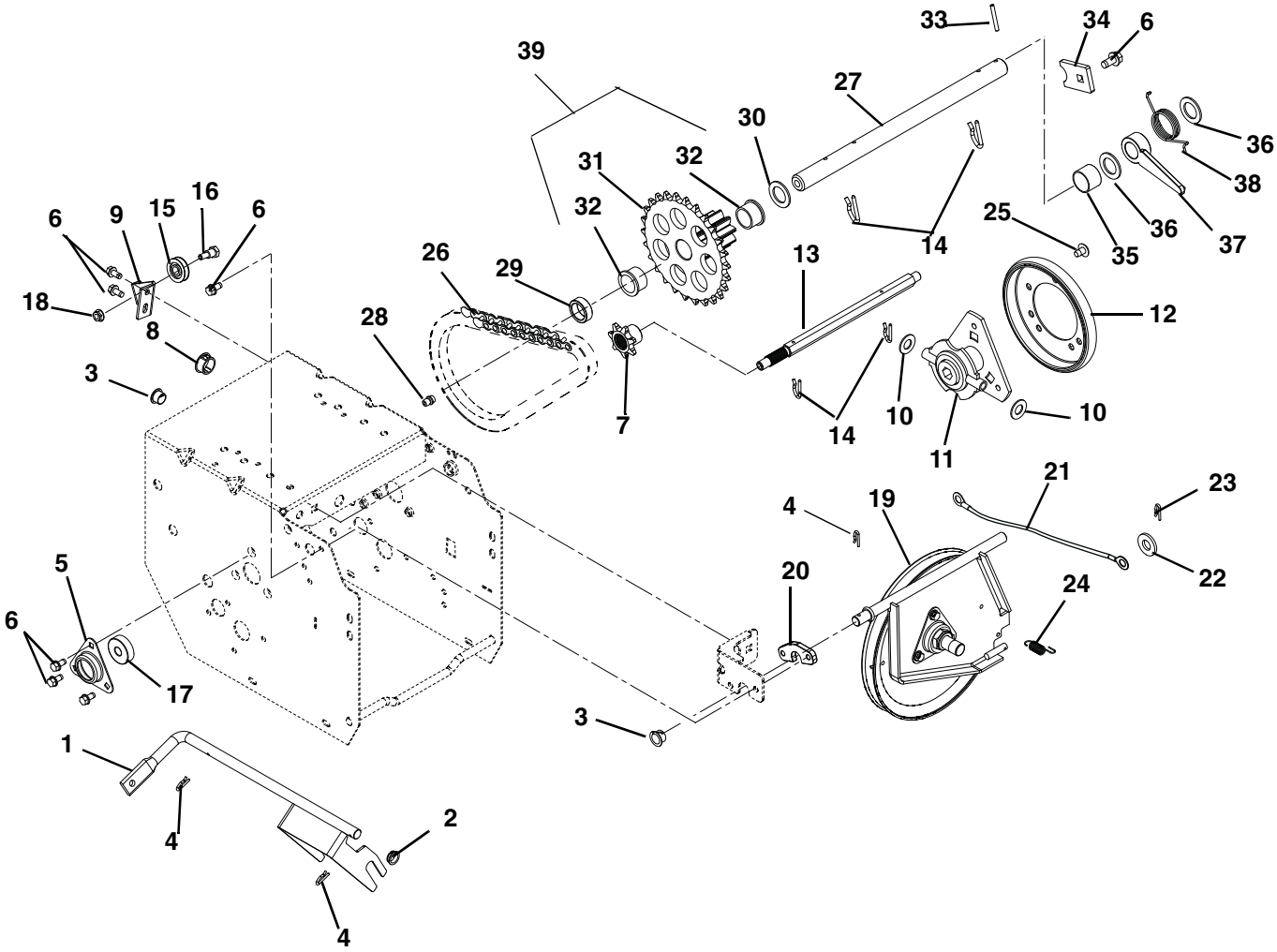

Item	Part No.	Qty.	Description
1	00494051	1	Weldment, Shift Fork
2	05500028	1	Bushing, Polyliner-.50 Snap-in
3	05500026	2	Bushing, Polyliner-.50 Split
4	06944800	3	Clip, Spring
5	00383000	2	Flange, Bearing
6	07400034	11	Screw, Tapping Hex Washer Head .25-20 x .50
7	00385800	1	Spocket, Pinion, 7 Tooth w/Spline
8	07500023	1	Plug, Hole- .875" Nylon (011, 014, 015, 016, 017, 018, 019, 305, 306, 307, 311, 312)
9	00373051	1	Bracket, Cable Pulley
10	06439200	2	Washer, Flat Steel .505 x 1.00 x .062
11	00383100	1	Carrier, Drive Disc
12	00170800	1	Friction Disc
13	00657600	1	Hex Shaft w/spline
14	06714500	4	Pin, Spring Clip
15	07300012	1	Pulley, Cable
16	07000021	1	Bolt, Shoulder .375 x .375 x .25-20

https://truckmanualshub.com/

Model All

17	05435200	2	Bearing, Ball
18	06543500	1	Nut, Locking Top Flange .25-20
19	52100200	1	Plate, Swing Assembly
20	05500113	1	Spacer, Swing Gate
21	06900313	1	Cable, Traction - Tractor
22	06437200	1	Washer, Flat-Steel .344 x .688 x .065
23	06713500	1	Pin, Hair Internal .08 x .18 x 1.18
24	08300036	1	Spring, Extension
25	07400009	3	Screw, Tapping Serrated Round Head Torx .31-18 x .50
26	02466200	1	Chain, #41, 32 Pitches
27	00657900	1	Shaft, Pinion
28	07061300	1	Zerk, Fitting .25 x .125 Drive-In
29	05500035	1	Bushing, Sleeve
30	06436100	1	Washer, Flat Steel .630 x 1.005 x .062
31	00190600	1	Pinion and Sprocket
32	05500111	2	Bushing, Flange
33	05800900	1	Pin, Roll .125 x 1.00
34	00503500	1	Tab, Anti-Rotation
35	05500029	1	Spacer (011, 014, 015, 016, 017, 018, 019, 305, 306, 307, 311, 312)
36	06436100	2	Washer, Flat Steel .630 x 1.005 x .062 (012, 013, 020)
37	00391200	1	Lever, Lock Arm (012, 013, 020)
38	00391300	1	Spring, Torsion (012, 013, 020)
39	52601500	1	Pinion and Sprocket w/Bushings (includes items 31 and 32)

https://truckmanualshub.com/

WHEELS AND AXLES

Model 921011, 019, 305

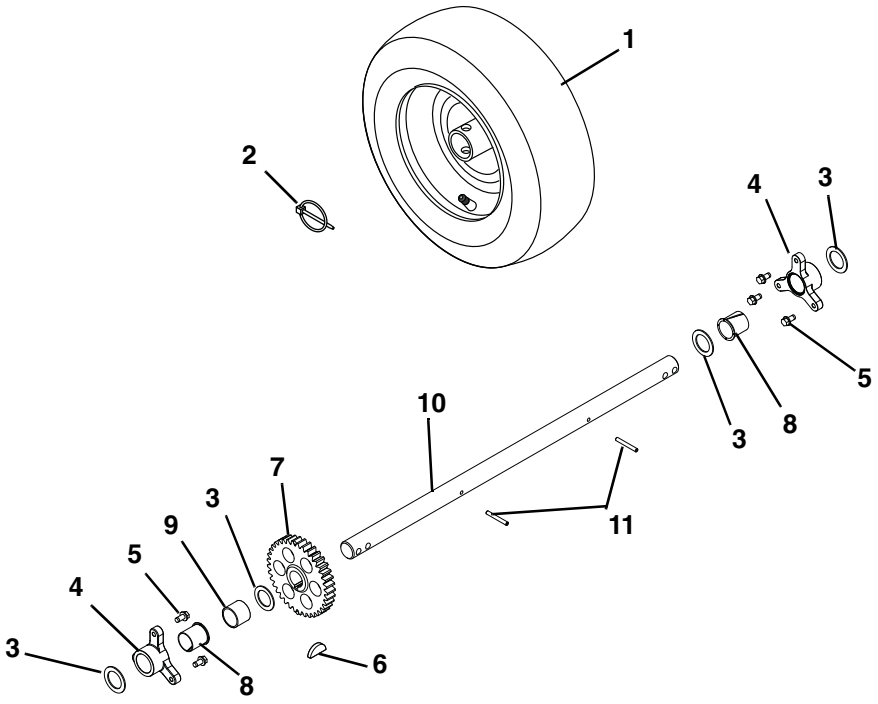

Item	Part No.	Qty.	Description
1	07100225	1	Tire/Wheel, Right Hand 15 x 5.00-6 Pin
	07100226	1	Tire/Wheel, Left Hand 15 x 5.00-6 Pin
	07100726	AR	Tire, 15 x 5.00-6 K478
2	07015800	2	Pin-Lok .31 x 2.00
3	06436300	4	Washer, Flat-Steel 1.010 x 1.505 x .062
4	00275100	2	Bushing, Rake Shaft 1"
5	07400034	6	Screw, Tapping Hex Washer Head .25-20 x .50
6	06601200	1	Key, Woodruff .25 x .750 x .313 SAE 91
7	00371000	1	Gear, Spur
8	05500030	2	Bushing, Flange Split Nyliner 1.0" HP
9	05500122	1	Bushing, Sleeve
10	00658100	1	Axle, 1.00" Solid
11	05800300	2	Pin, Roll .188 x 1.25

https://truckmanualshub.com/

WHEELS AND AXLES

Model 921012, 013, 020,

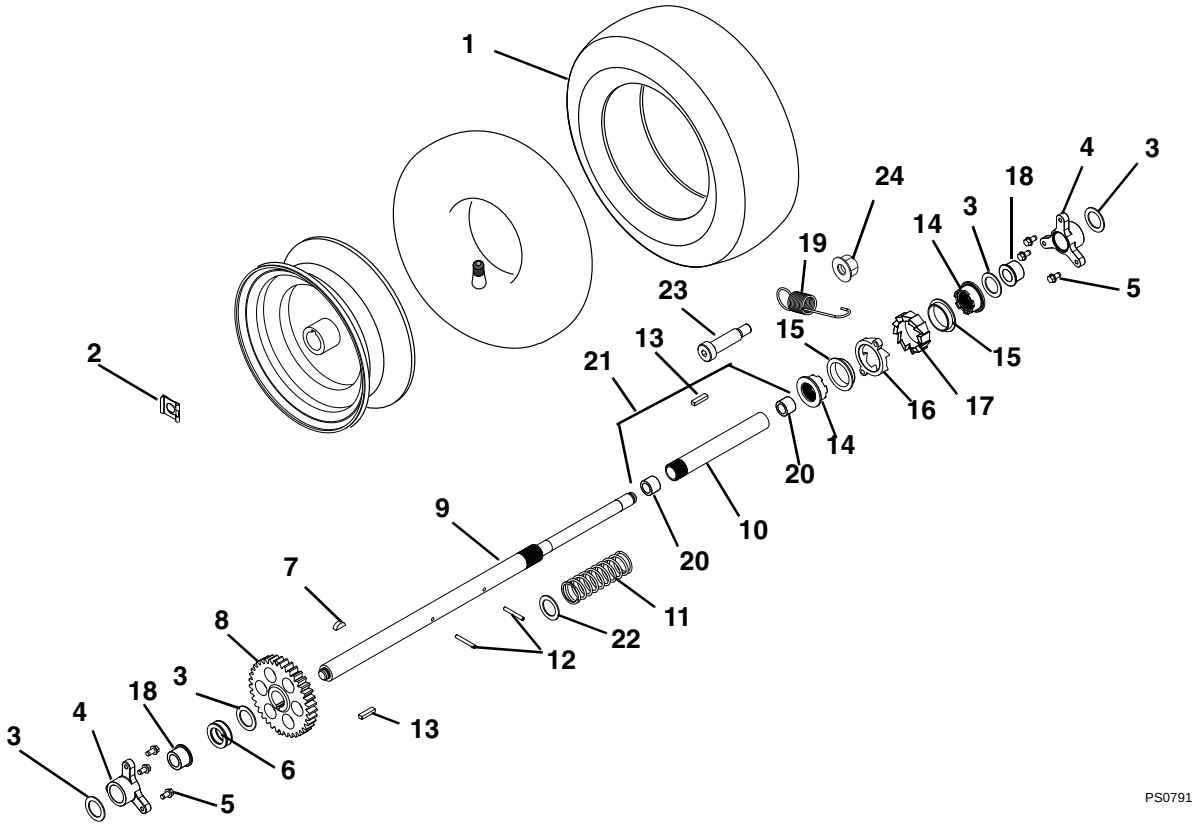

Item	Part No.	Qty.	Description
1	07100227	1	Tire/Wheel, RH 15 x 5.00-6 Remote
	07100228	1	Tire/Wheel, LH 15 x 5.00-6 Remote
	07100726	AR	Tire, 15 x 5.00-6 K478
2	05700001	2	Clip, Snap
3	06436300	4	Washer, Flat Steel 1.010 x 1.505 x .062
4	00275100	2	Bushing, Rake Shaft 1"
5	07400034	6	Screw, Tapping Hex Washer Head .25-20 x .50
6	05500122	1	Bushing, Sleeve
7	06601200	1	Woodruff Key .25 x .750 x .313 SAE 91
8	00371000	1	Gear, Spur
9	00865600	1	Axle, Long Clicker
10	00865700	1	Axle, Short Clicker
11	00427700	1	Spring, Compression
12	05800300	2	Pin-Roll .188 x 1.25
13	06600002	2	Key, Rectangular .25 x .188 x 1.00
14	00386900	2	Clutch, Dog Sliding
15	00391100	2	Bushing, Flange
16	00387100	1	Gear, Clutch
17	00387000	1	Gear, Ratchet
18	05500030	2	Bushing, Flange Split Nyliner 1.0" HP
19	08300023	1	Spring, Extension
20	05500023	2	Bushing, Sleeve Bronze
21	52101100	AR	Axle, Clicker With Bushings (Includes 10 and 20)
22	06400332	1	Washer, Flat-Steel 1.010 x 1.250 x .068
23	05900602	1	Bolt, Shoulder .50 x 1.50 .38-16 x .625
24	06542000	1	Nut, Locking-Top-Flange .38-16

https://truckmanualshub.com/

Model 921017, 018, 306, 307

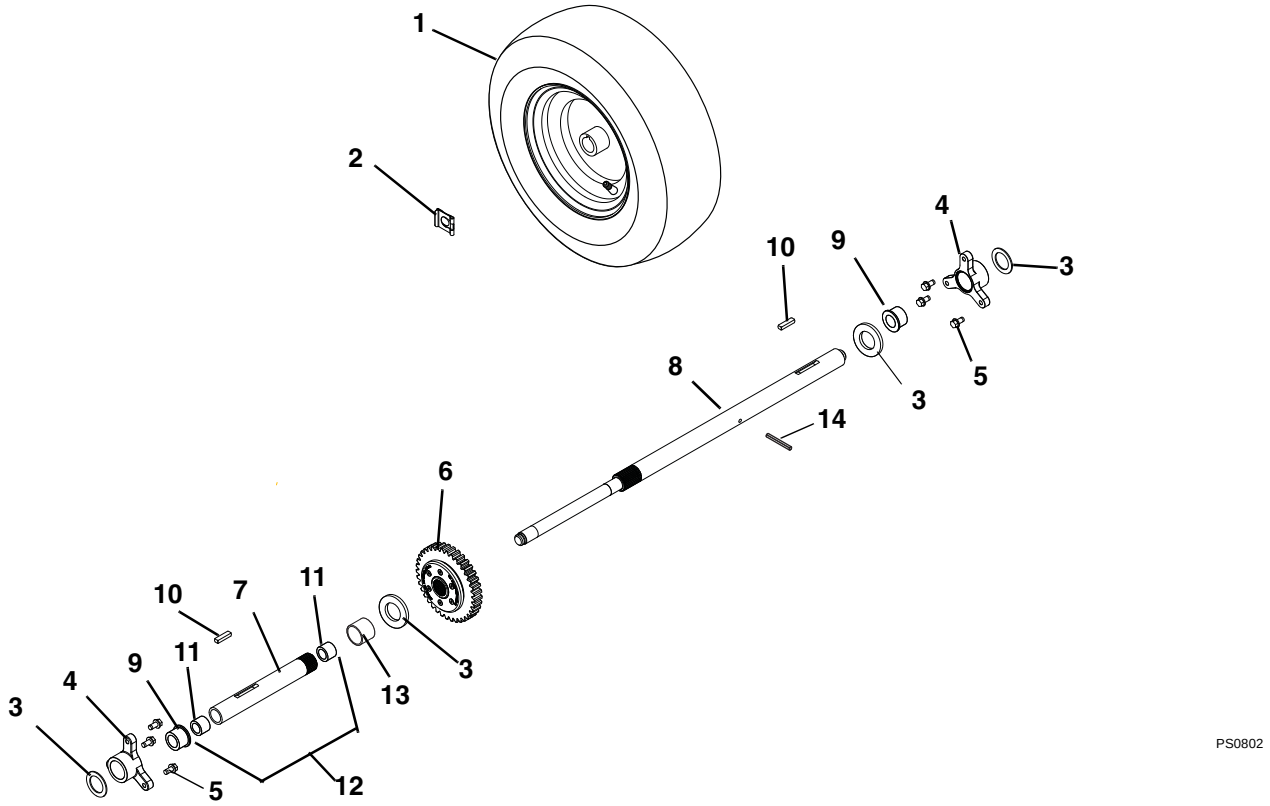

Item	Part No.	Qty.	Description
1	07100227	1	Tire/Wheel Assembly RH 15 x 5.00 - 6 Remote
	07100228	1	Tire/Wheel Assembly LH 15 x 5.00 - 6 Remote
	07100726	AR	Tire, 15 x 5.00 - 6 K478
2	05700001	2	Clip, Snap
3	06436300	4	Washer, Flat Steel 1.010 x 1.505 x .062
4	00275100	2	Bushing, Rake Shaft 1"
5	07400034	6	Screw, Tapping Hex Washer Head .25-20 x .50
6	00866000	1	Differential Assembly
7	00865900	1	Axle, Short - Differential
8	00865800	1	Axle, Long - Differential
9	05500030	2	Bushing, Flange Split Nyliner 1.0" HP
10	06600002	2	Key Rectangular .25 x .188 x 1.00
11	05500023	2	Bushing, Sleeve Bronze
12	52101200	AR	Axle, Differential with Bushings (Includes 7 and 11)
13	05500122	1	Bushing, Sleeve
14	05800300	1	Pin, Roll .188 x 1.25

https://truckmanualshub.com/

NOTES

https://truckmanualshub.com/

TRACK AND AXLES

Model 921014, 015, 016, 311, 312

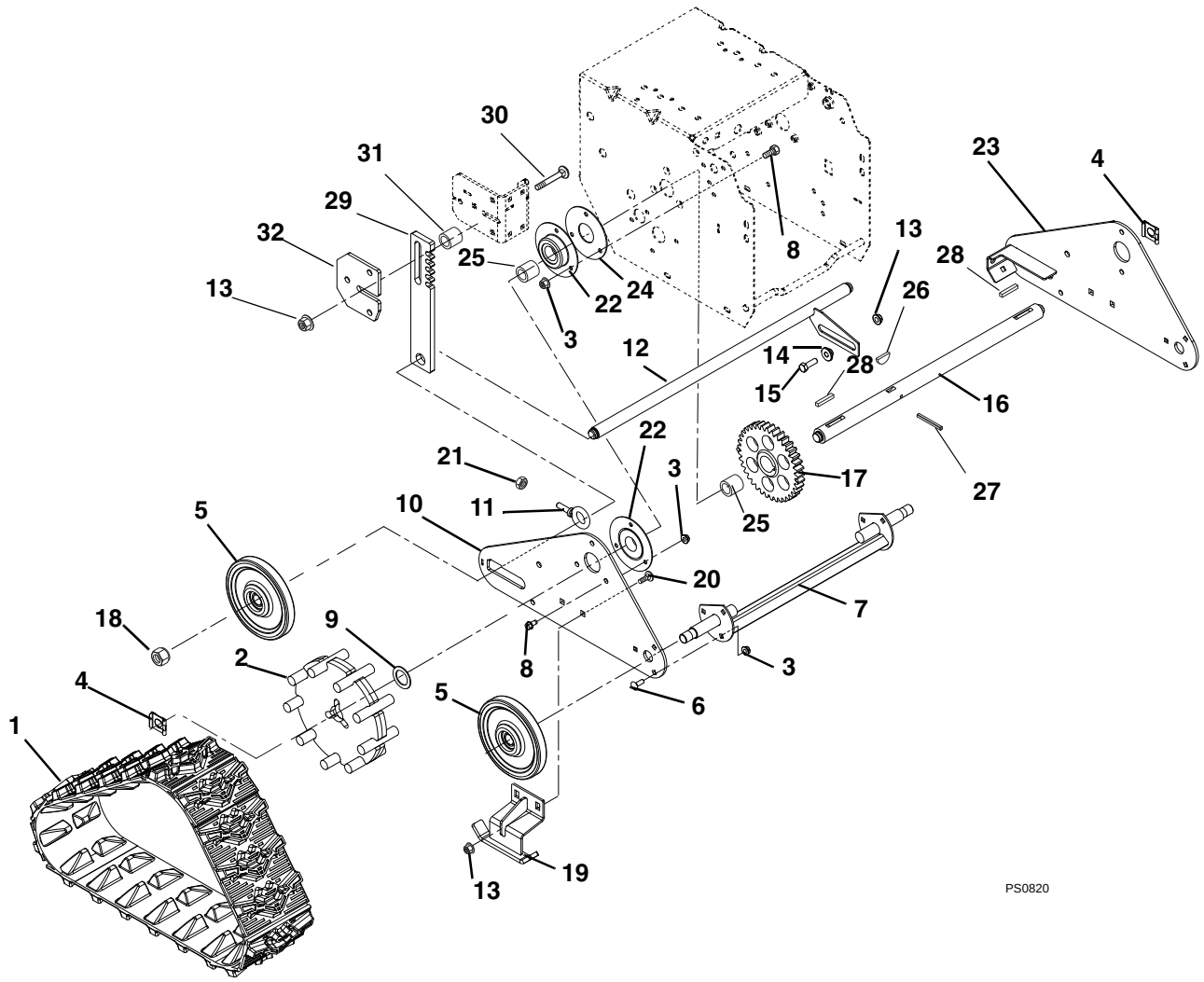

Item	Part No.	Qty.	Description
1	00669700	2	Track, Rubber
2	00670351	2	Wheel, Drive-Track
3	06543500	18	Nut, Locking-Top-Flange .25-20
4	05700001	2	Clip, Snap
5	03293600	4	Wheel, Bogie - Single Bearing
6	06219900	6	Bolt, Round Head Square Neck .25-20 x .75 Grade 5
7	03275800	1	Axle, Front
8	05946800	12	Bolt, Hex .25-20 x .75 Grade 5
9	06436300	2	Washer, Flat-Steel 1.010 x 1.505 x .062
10	03375751	1	Side Plate, Right Hand-Track
11	07000040	2	Bolt, Eye
12	03293700	1	Axle, Rear
13	06543100	8	Nut, Locking-Top-Flange .31-18
14	01305900	1	Flange Bushing
15	05946900	1	Bolt, Hex .31-18 x 1.00 Grade 5
16	03291500	1	Axle, Track
17	00371000	1	Gear, Spur
18	06530300	4	Nut, Locking-Nylon .625-18
19	00660751	2	Runner, Guide-Track
20	06215700	4	Bolt, Round Head Square Neck .31-18 x .75 Grade 5
21	06534800	2	Nut, Locking Flange Gr. A .375-16

https://truckmanualshub.com/

Model 921014, 015, 016, 311, 312

22	05400706	4	Bearing, Flange - 3 Bolt
23	03375851	1	Side Plate, Left Hand-Track
24	03389051	2	Plate, Bearing Spacer
25	05500122	3	Bushing, Sleeve
26	06601200	1	Key, Woodruff .25 x .750 x .313 SAE 91
27	05800300	1	Pin, Roll .188 x 1.25
28	06600002	2	Key, Rectangular .25 x .188 x 1.00
29	03293851	1	Stop, Height Adjuster
30	06200008	3	Bolt, Round Head Square Short Neck .31-18 x 1.25 Grade 5
31	01103100	3	Spacer
32	03294151	1	Plate, Height Adjuster

https://truckmanualshub.com/

HANDLEBARS AND CONTROLS

Model 921011, 014, 019

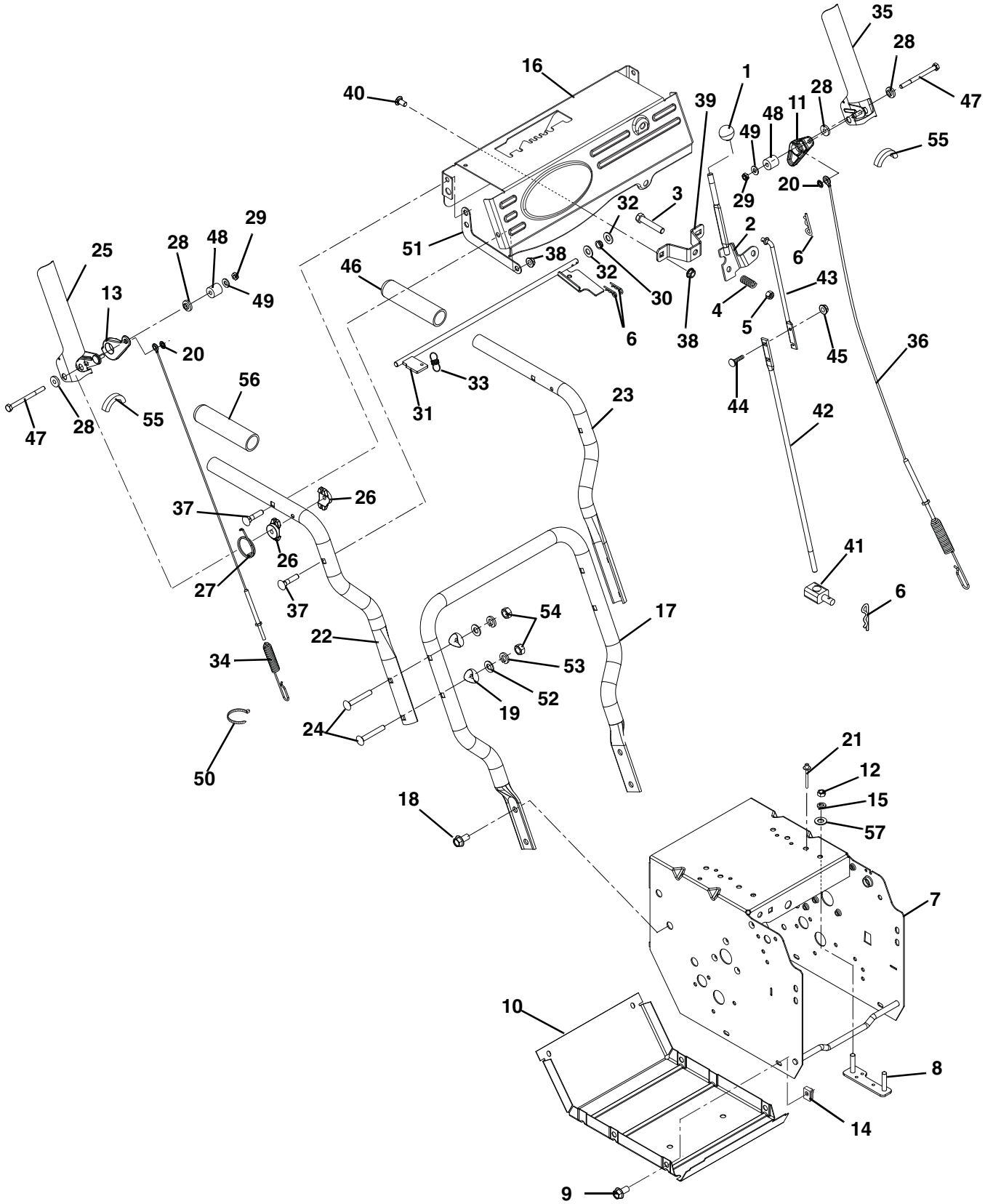

https://truckmanualshub.com/

HANDLEBARS AND CONTROLS

Model 921011, 014, 019

Item	Part No.	Qty.	Description
1	07533500	1	Knob, Ball-Black
2	03247900	1	Weldment, Shift Lever
3	05963300	1	Bolt, Hex .38-16 x 2.00 Grade 5
4	08335700	1	Spring, Compression
5	06542000	1	Nut, Locking-Top-Flange .38-16
6	06713500	4	Pin, Hair Internal .08 x .18 x 1.18
7	03884259	1	Weldment, Frame
8	00188400	2	Strap, Engine Bolt Weldment
9	05900019	6	Bolt, Hex Washer Head .25-20 x .75 Grade 5
10	00492359	1	Cover, Bottom
11	03386500	1	Left Hand Cam, Interlock
12	06529200	4	Nut, Hex .31-18
13	03386600	1	Right Hand Cam, Interlock
14	07009000	6	Nut, Retainer .25-20 x .56
15	06307400	4	Washer, Locking .31 x .097 Heavy
16	52001400	1	Control Panel with Decal (011, 019)
	52102500	1	Control Panel with Decal (014)
17	00656151	1	Handlebar, Lower
18	07028500	4	Bolt, Serrated Flange Hex Washer Head .38-16 x .75 Grade 5
19	07500005	4	Spacer, Handlebar
20	05717600	2	Ring, Retaining, External .25 x .010
21	06800028	2	Rivet-Pop, .187
22	00656251	1	Handlebar, Upper RH (011, 019)
	03785151	1	Handlebar, Upper RH (014)
23	00656351	1	Handlebar, Upper LH
24	06221600	4	Bolt, Round Head Square Neck .31-18 x 2.25
25	00398351	1	Paddle, Clutch - RH
26	05500040	4	Spacer, Handlebar
27	08300026	2	Spring, Torsion
28	00399300	4	Bushing, Flange
29	06530900	2	Nut, Jam Nylon .250-20
30	05500020	1	Bushing, Polyliner
31	03387000	1	Weldment, Interlock Shaft
32	06436200	2	Washer, Flat-Steel .406 x .812 x .065
33	08300432	1	Spring, Extension
34	06900312	1	Cable, Attachment
35	00398151	1	Paddle, Clutch - LH
36	06900301	1	Cable, Traction
37	06200009	4	Bolt, Round Head Square Extra Long Neck .31-18 x 1.50 Grade 5
38	06543100	6	Nut, Locking Top Flange .31-18
39	03886951	1	Bracket, Shift Mount
40	06212200	2	Bolt, Round Head Square Short Neck .31-18 x .62
41	00386700	1	Pivot, Shift Rod
42	00494900	1	Rod, Shift Lower
43	00494800	1	Rod, Shift Upper
44	06219900	2	Bolt, Round Head Square Neck .25-20 x .75 Grade 5
45	06543500	2	Nut, Locking Top Flange .25-20
46	07518700	1	Handle Grip
47	05965300	2	Bolt, Hex .25-20 x 3.25
48	00589800	2	Bushing, Sleeve
49	06437300	2	Washer, Flat Steel .281 x .62 x.065
50	07517300	1	Cable Tie
51	03387151	1	Strap, Support
52	06435700	4	Washer, Flat Steel .38 x .875 x .083
53	06307400	4	Washer, Locking .312 x .097 Heavy
54	06530200	4	Nut, Locking Nylon .31-18
55	07500103	2	Edging, Clutch Paddle
56	07500113	1	Handle Grip (014)
	07518700	1	Handle Grip (011, 019)
57	06437200	1	Washer, Flat Steel .344 x .688 x .065 (011, 014)
	06437200	2	Washer, Flat Steel .344 x .688 x .065 (019)

https://truckmanualshub.com/

HANDLEBARS, LEVER CONTROLS, PANEL AND DASH

Model 921012, 013, 014, 015, 016, 017, 018, 020, 305, 306, 307, 311, 312

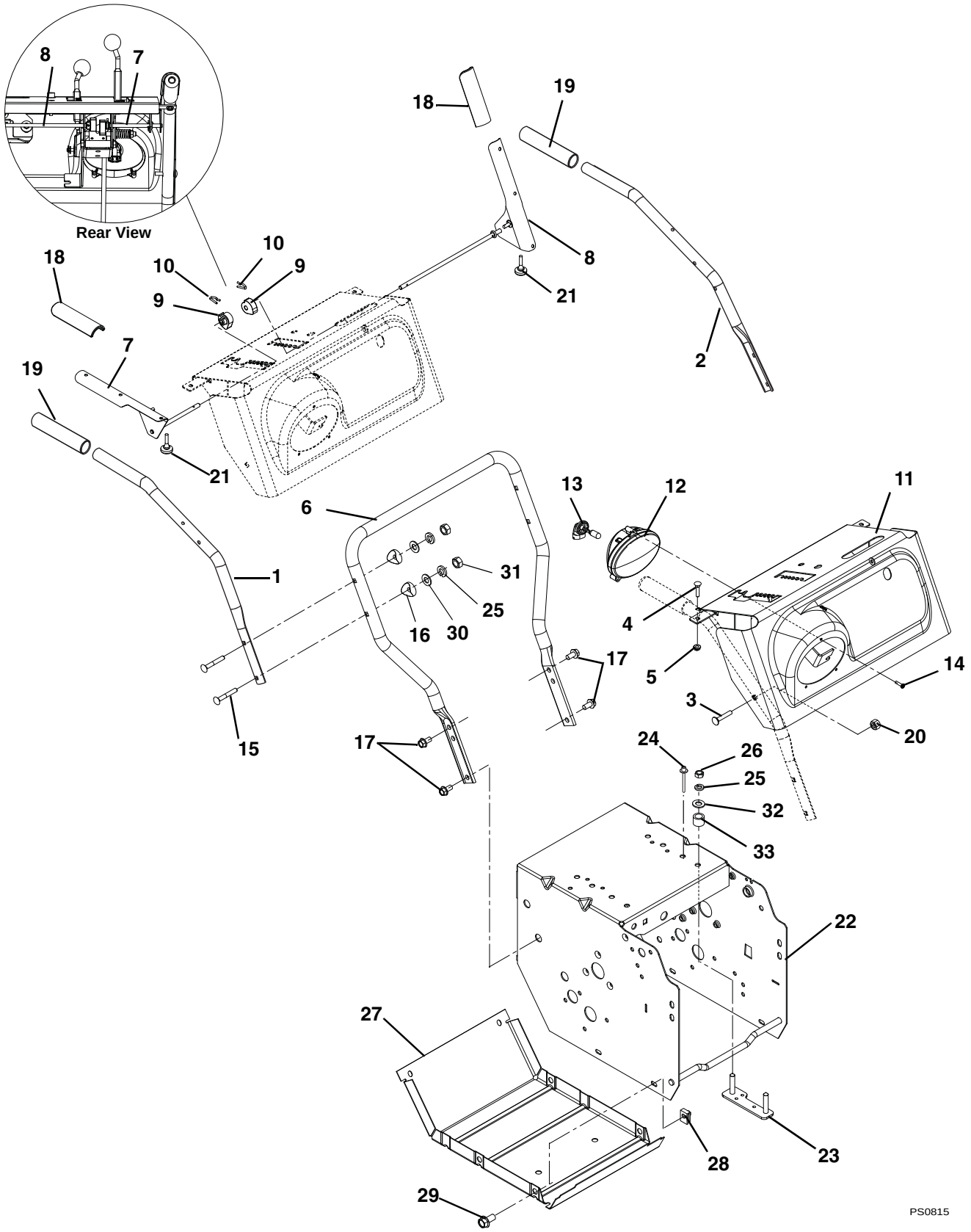

https://truckmanualshub.com/

HANDLEBARS, LEVER CONTROLS, PANEL AND DASH

Model 921012, 013, 014, 015, 016, 017, 018, 020, 305, 306, 307, 311, 312

Item	Part No.	Qty.	Description
1	00428351	1	Handlebar, Upper Right Hand (012, 013, 015, 016, 020, 305, 306, 307, 311, 312)
	52602000	1	Handlebar, Upper Right Hand w/Heated Hand Grip (017, 018)
2	00428451	1	Handlebar, Upper Left Hand (012, 013, 015, 016, 020, 305, 306, 307, 311, 312)
	52601900	1	Handlebar, Upper Left Hand w/Heated Hand Grip (017, 018)
3	06220200	2	Bolt, Round Head Square Neck .31-18 x 1.75 Grade 5
4	06220100	2	Bolt, Round Head Square Neck .25-20 x 1.25 (017, 018, 305, 306, 307)
	06220100	1	Bolt, Round Head Square Neck .25-20 x 1.25 (012, 013, 014, 015, 016, 020, 311, 312)
5	06543500	2	Nut, Locking Top Flange .25-20 (017, 018, 305, 306, 307)
	06543500	1	Nut, Locking Top Flange .25-20 (012, 013, 014, 015, 016, 020, 311, 312)
6	00866251	1	Handlebar, Lower
7	00393051	1	Lever, Right Hand-Attachment
8	00393151	1	Lever, Left Hand-Traction
9	03888100	2	Cam, Interlock
10	06714500	2	Pin, Spring Clip
11	52102200	1	Panel-with Decal (013, 020)
	52100400	1	Panel-with Decal (017, 018)
	52101300	1	Panel-with Decal (012)
	52102000	1	Panel-with Decal (015)
	52102100	1	Panel-with Decal (305)
	52102300	1	Panel-with Decal (016, 311, 312)
	52102400	1	Panel-with Decal (306, 307)
12	00432500	1	Light, Halogen Assembly (012, 013, 015, 016, 017, 018, 305, 306, 307, 311, 312)
	03917500	1	Light, Halogen Assembly 15W (020)
13	00432600	1	Bulb, Light, Halogen (012, 013, 015, 016, 017, 018, 305, 306, 307, 311, 312)
	03917501	1	Bulb, Light, Halogen (020)
14	07416700	3	Screw, Tapping 10-16 x .75 Hi-Lo
15	06221600	4	Bolt, Round Head Square Neck .31-18 x 2.25
16	07500005	4	Spacer, Handlebar
17	07028500	4	Bolt, Serrated Flange Hex Washer Head .38-16 x .75 Grade 5
18	00384500	2	Grip, Clutch Lever
19	07518700	2	Handle Grip (012, 013, 015, 016, 020, 305, 306, 307, 311, 312)
20	06529800	4	Nut, Locking-Center .31-18
21	07500038	2	Bumper, Rubber
22	03884259	1	Weldment, Frame
23	00188400	2	Strap, Engine Bolt Weldment (012, 015, 017, 305, 311)
	00392000	2	Strap, Engine Bolt Weldment (013, 016, 018, 020, 306, 307, 312)
24	06800028	2	Rivet, Pop .187
25	06307400	8	Washer, Locking .312 x .097 Heavy
26	06529200	4	Nut, Hex .31-18
27	00492359	1	Cover, Bottom
28	07009000	6	Nut, Retainer .25-20 x .56
29	05900019	6	Bolt, Hex Washer Head .25-20 x .75 Grade 5
30	06435700	4	Washer, Flat Steel .38 x .875 x .083
31	06530200	4	Nut, Locking Nylon .31-18
32	06437200	1	Washer, Flat Steel .344 x .688 x .065 (012, 013, 015, 016, 017, 018, 305, 306, 307, 311, 312)
	06437200	2	Washer, Flat Steel .344 x .688 x .065 (020)
33	05500937	4	Bushing, Sleeve (020)

https://truckmanualshub.com/

CABLES AND CONTROLS

Model 921012, 013, 014, 015, 016, 017, 018, 020, 305, 306, 307, 311, 312

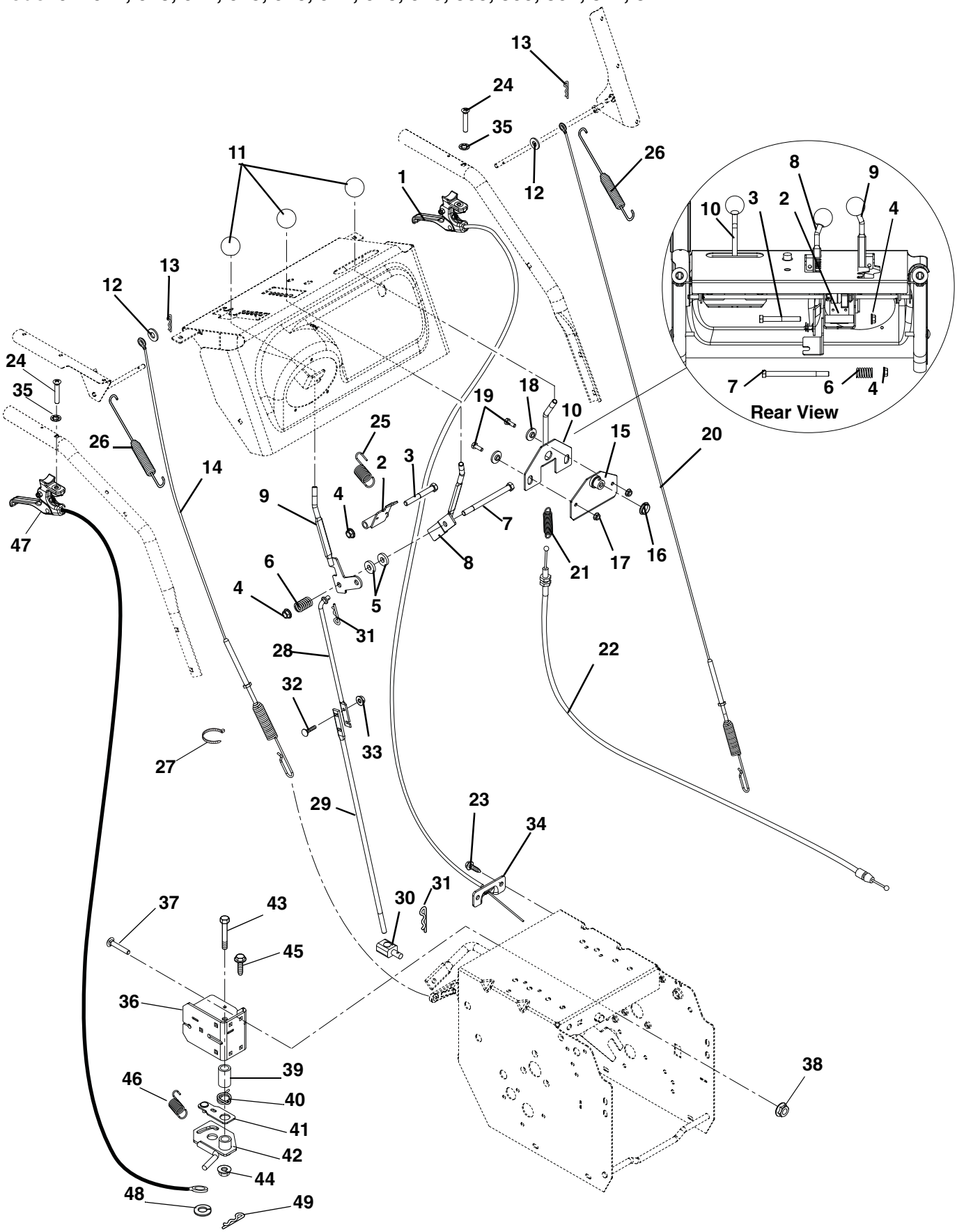

https://truckmanualshub.com/

CABLES AND CONTROLS

Model 921012, 013, 014, 015, 016, 017, 018, 020, 305, 306, 307, 311, 312

Item	Part No.	Qty.	Description
1	06900302	1	Cable, Trigger Remote Wheel (012, 013, 020)
2	00356900	1	Arm, Interlock
3	05957800	1	Bolt, Hex .38-16 x 3.00 Grade 5
4	06542000	2	Nut, Locking Top Flange .38-16
5	06444000	2	Washer, Flat Steel .406 x 1.00 x .188 (013, 016, 017, 018, 020, 306, 307, 311, 312)
	06444000	1	Washer, Flat Steel .406 x 1.00 x .188 (012, 015, 305)
6	08335700	1	Spring, Compression
7	05957700	1	Bolt, Hex .38-16 x 5.00 Grade 5
8	00379100	1	Control, Deflector (013, 016, 017, 018, 020, 306, 307, 311, 312)
9	00396900	1	Lever, Shift
10	00180300	1	Lever, Chute Control (017, 018)
11	07533500	3	Knob, Ball Black (017, 018)
	07533500	1	Knob, Ball Black (012, 015, 305)
	07533500	2	Knob, Ball Black (013, 016, 020, 306, 307, 311, 312)
12	06437300	2	Washer, Flat Steel .281 x .62 x .065
13	06701900	2	Pin, Hair Internal .06 x .18 x .77
14	06900312	1	Cable, Attachment
15	00184800	1	Mount, Chute Control (017, 018)
16	05500027	1	Bushing, Polyliner .75 Snap-in (017, 018)
17	06543500	2	Nut, Locking Top Flange .25-20 (017, 018)
18	05500004	2	Bushing, Flange (017, 018)
19	05946800	2	Bolt, Hex .25-20 x .75 Grade 5 (017, 018)
20	06900301	1	Cable, Traction
21	08310900	1	Spring, Extension (017, 018)
22	06900407	1	Cable, Chute Lock (017, 018)
23	07400034	2	Screw, Tapping Hex Washer Head .25-20 x .50 (012, 013, 020)
24	06100007	1	Screw, Machine Oval Head .25-20 x 1.50 (012, 013, 014, 015, 016, 020, 311, 312)
25	08337000	1	Spring, Extension
26	08300017	2	Spring, Extension
27	07517300	1	Cable Tie
28	03917000	1	Rod, Shift - Upper
29	03917100	1	Rod, Shift - Lower
30	00386700	1	Pivot, Shift Rod
31	06714800	2	Pin, Hair
32	06219900	2	Bolt, Round Head Square Neck .25-20 x .75 Grade 5
33	06543500	2	Nut, Locking Top Flange .25-20
34	00956051	1	Bracket, Cable Mount (012, 013, 020)
35	06305200	1	Washer, Locking Internal .250 (012, 013, 014, 015, 016, 020, 311, 312)
36	03293951	1	Bracket, Height Adjuster (014, 015, 016, 311, 312)
37	06219900	4	Bolt, Round Head Square Neck .25-20 x .75 Grade 5 (014, 015, 016, 311, 312)
38	06543500	4	Nut, Locking-Top-Flange .25-20 (014, 015, 016, 311, 312)
39	05500106	1	Bushing, Sleeve (014, 015, 016, 311, 312)
40	08300015	1	Spring, Torsion (014, 015, 016, 311, 312)
41	03376200	1	Arm, Overtravel (014, 015, 016, 311, 312)
42	03294000	1	Lock, Height Adjuster (014, 015, 016, 311, 312)
43	05958500	1	Bolt, Hex .38-16 x 1.75 Grade 5 (014, 015, 016, 311, 312)
44	06534800	1	Nut, Locking Flange .38-16 Gr. A (014, 015, 016, 311, 312)
45	07400034	1	Screw, Tapping Hex Washer Head .25-20 x .50 (014, 015, 016, 311, 312)
46	08300103	1	Spring, Extension (014, 015, 016, 311, 312)
47	06900331	1	Cable, Track Remote (014, 015, 016, 311, 312)
48	06437300	1	Washer, Flat-Steel .281 x .62 x .065 (014, 015, 016, 311, 312)
49	06701900	1	Pin, Hair-Internal .06 x .18 x .77 (014, 015, 016, 311, 312)

https://truckmanualshub.com/

CHUTE AND AUGER

Model All

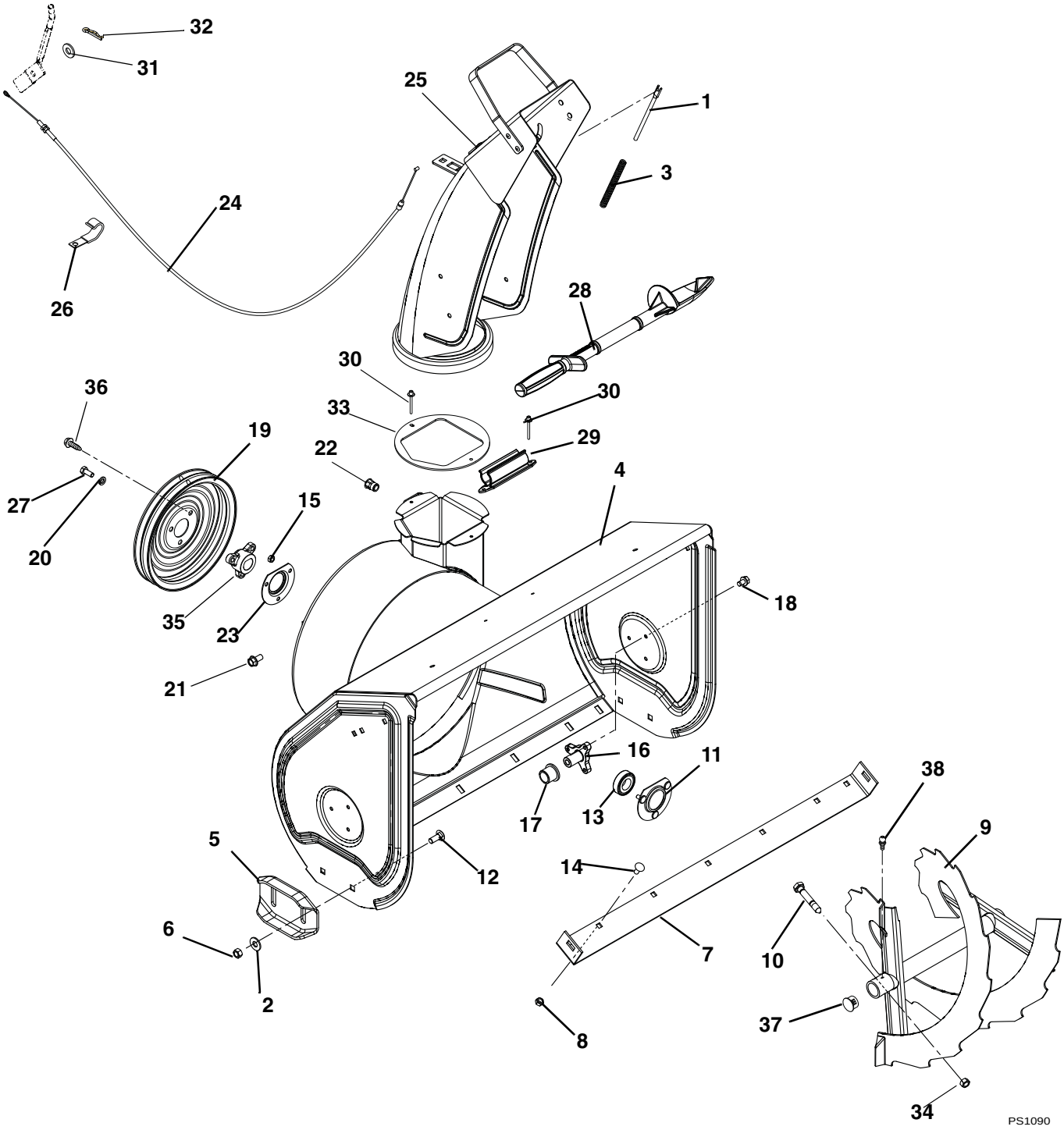

https://truckmanualshub.com/

CHUTE AND AUGER

Model All

Item	Part No.	Qty.	Description
1	00389000	1	Rod, Deflector Cap (013, 016, 017, 018, 020, 306, 307, 311, 312)
2	06435900	4	Washer, Flat Steel .438 x 1.00 x .083
3	08300013	1	Spring, Compression (013, 016, 017, 018, 020, 306, 307, 311, 312)
4	52101700	1	Blower Housing with Decal 24" (011, 014, 017, 019, 305, 311)
	52101800	1	Blower Housing with Decal 27" (012, 015, 306, 312)
	52101900	1	Blower Housing with Decal 30" (013, 016, 018, 020, 307)
5	02483859	2	Runner, Double Flange
6	06529600	4	Nut, Locking Center .38-16
7	00658559	1	Scraper Blade 24" (011, 014, 017, 019, 305, 311)
	00660659	1	Scraper Blade 27" (012, 015, 306, 312)
	00661159	1	Scraper Blade 30" (013, 016, 018, 020, 307)
8	06543100	5	Nut, Locking Top Flange .31-18 (011, 012, 014, 015, 017, 019, 305, 306, 311, 312)
	06543100	7	Nut, Locking Top Flange .31-18 (013, 016, 018, 020, 307)
9	52102600	1	Rake, Left Hand w/Zerk - 24" (14" O.D.) (011, 014, 017, 019, 305, 311)
	52102700	1	Rake, Right Hand w/Zerk - 24" (14" O.D.) (011, 014, 017, 019, 305, 311)
	52102800	1	Rake, Left Hand w/Zerk - 27" (14" O.D.) (012, 015, 306, 312)
	52102900	1	Rake, Right Hand w/Zerk - 27" (14" O.D.) (012, 015, 306, 312)
	52103000	1	Rake, Left Hand w/Zerk - 30" (14" O.D.) (013, 016, 018, 020, 307)
	52103100	1	Rake, Right Hand w/Zerk - 30" (14" O.D.) (013, 016, 018, 020, 307)
10	52100100	2	Shear Bolt Service Assembly (Includes Item 34)
11	00428700	1	Bearing Flange
12	06212000	4	Bolt, Round Head Square Short Neck .38-16 x 1.00 Grade 5
13	05409300	1	Bearing, Ball
14	06200120	5	Bolt, Round Short Head Square Short Neck .31-18 x .62 (011, 012, 014, 015, 017, 019, 305, 306, 311, 312)
	06200120	7	Bolt, Round Short Head Square Short Neck .31-18 x .62 (013, 016, 018, 020, 307)
15	06529700	3	Nut, Locking Center .25-20
16	00659200	2	Support, Rake Bushing
17	05500114	2	Bushing, Flange Nylon
18	07400034	6	Screw, Tapping Hex Washer Head .25-20 x .50
19	00268751	1	Pulley, Dual Groove, 4L
20	06307400	1	Washer, Locking .312 x .097 Heavy
21	07400030	4	Screw, Tapping Hex Washer Head .31-18 x .50
22	07001612	2	Nut, Threaded Insert .38-16
23	01014200	1	Bearing Flange
24	06900406	1	Cable, Deflector (013, 016, 017, 018, 020, 306, 307, 311, 312)
25	52602200	1	Chute, Discharge with Deflector (017, 018)
	52100500	1	Chute, Discharge with Cap and Decal (011, 012, 014, 015, 019, 305)
	52609000	1	Chute, Discharge with Deflector (013, 016, 306, 307, 311, 312)
	52103200	1	Chute, Discharge with Cap and Decal (020)
26	06909400	1	Clamp, J (013, 016, 017, 018, 020, 306, 307, 311, 312)
27	05947300	1	Bolt, Hex .31-24 x .75 Grade 5
28	00170200	1	Device, Snow Clean Out
29	00170300	1	Mount, Snow Clean Out
30	06800028	4	Rivet, Pop .187
31	06437300	1	Washer, Flat Steel .281 x .62 x .065 (013, 016, 017, 018, 020, 306, 307, 311, 312)
32	06701900	1	Pin, Hair Internal .06 x .18 x .77 (013, 016, 017, 018, 020, 306, 307, 311, 312)
33	00600100	1	Baffle, Discharge Neck
34	06529800	2	Nut, Locking Center .31-18
35	00268702	1	Pulley Hub
36	07411500	3	Screw, Tapping Hex Washer Head .31-18 x .50
37	03905800	2	Plug
38	07061300	2	Zerk, Fitting .25 x .125 Drive-In

https://truckmanualshub.com/

DISCHARGE CHUTE

Model 921011, 012, 013, 014, 015, 016, 019, 020, 305, 306, 307, 311, 312

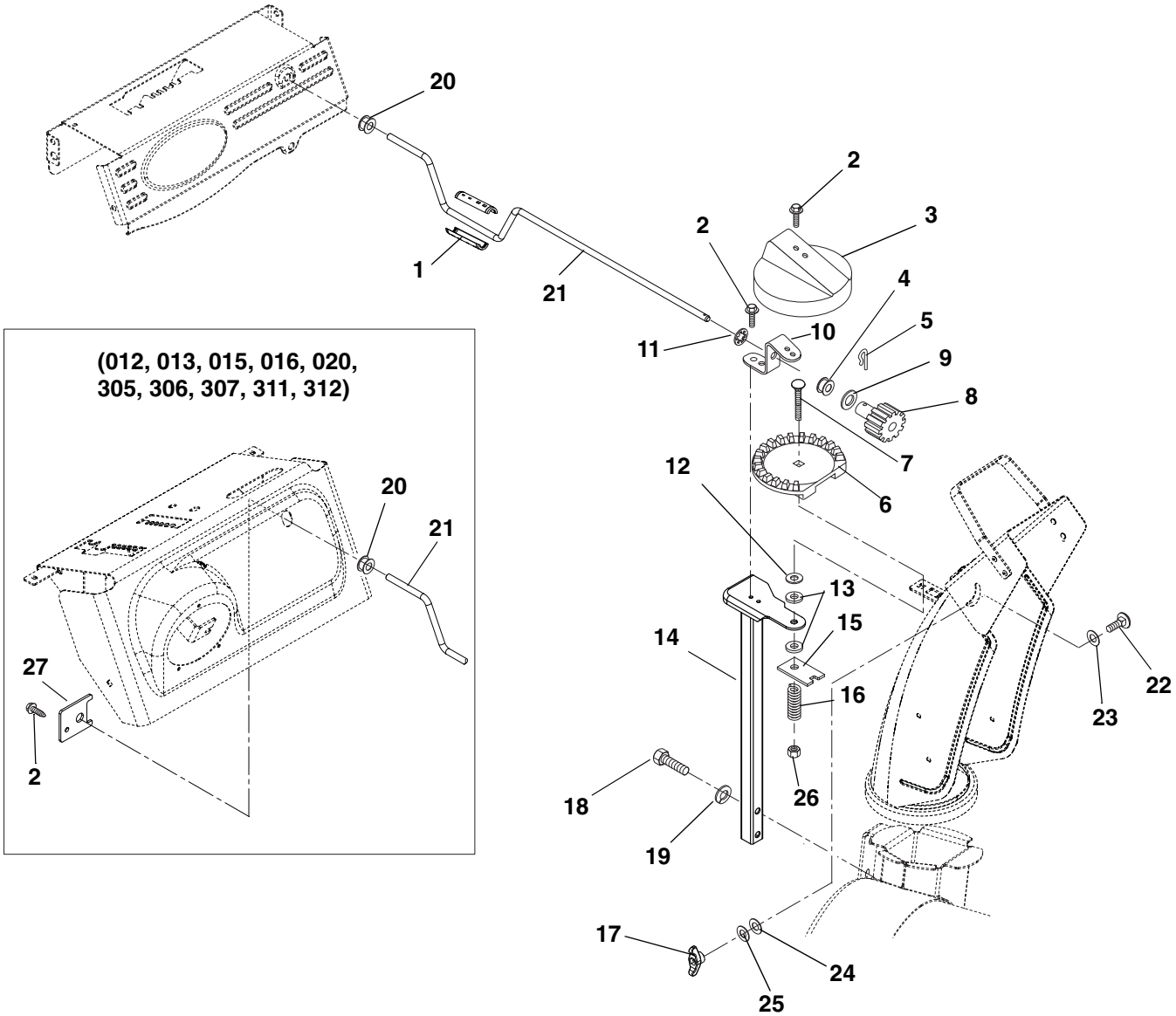

https://truckmanualshub.com/

DISCHARGE CHUTE

Model 921011, 012, 013, 014, 015, 016, 019, 020, 305, 306, 307, 311, 312

Item	Part No.	Qty.	Description
1	07500020	2	Knob, Crank Snap
2	07400034	5	Screw, Tapping Hex Washer Head .25-20 x .50 (012, 013, 015, 016, 020, 305, 306, 307, 311, 312)
	07400034	4	Screw, Tapping Hex Washer Head .25-20 x .50 (011, 014, 019)
3	03223000	1	Cover, Gear
4	05500021	1	Bushing, Polyliner
5	06714500	1	Pin, Spring Clip
6	03222900	1	Gear, Chute
7	06224400	1	Bolt, Round Head Square Neck .38-16 x 2.50 Grade 5
8	52000100	1	Bracket with Pinion Gear (Contains Items 4, 9, 10, 11)
9	06400009	1	Washer, Thrust .625 x 1.0 x .03
10	01972451	1	Bracket, Pinion Gear
11	03224300	1	Push Nut
12	06439300	1	Washer, Flat Steel .38 x 1.50 x .062
13	01123800	2	Friction Washer
14	00658351	1	Weldment, Chute Pedestal - Crank
15	00398000	1	Friction Plate
16	08320900	1	Spring, Compression
17	07500109	1	Knob, Wing .38-16 (011, 012, 014, 015, 019, 305)
18	05958500	2	Bolt, Hex .38-16 x 1.75 Grade 5
19	06308800	2	Washer, Locking .38 x .094
20	05500020	1	Bushing, Polyliner
21	00956500	1	Rod, Chute Crank
22	06212000	1	Bolt, Round Head Square Short Neck .38-16 x 1.00 (011, 012, 014, 015, 019, 305)
23	06441100	1	Washer, Flat-Steel .52 x .827 x .062 (011, 012, 014, 015, 019, 305)
24	06433600	1	Washer, Flat-Nylon .375 x .75 x .060 (011, 012, 014, 015, 019, 305)
25	06436200	1	Washer, Flat-Steel .406 x .812 x .065 (011, 012, 014, 015, 019, 305)
26	06542000	1	Nut, Locking-Top-Flange .38-16
27	03390151	1	Bracket, Chute Crank (012, 013, 015, 016, 020, 305, 306, 307, 311, 312)

https://truckmanualshub.com/

DISCHARGE CHUTE

Model 921017, 018

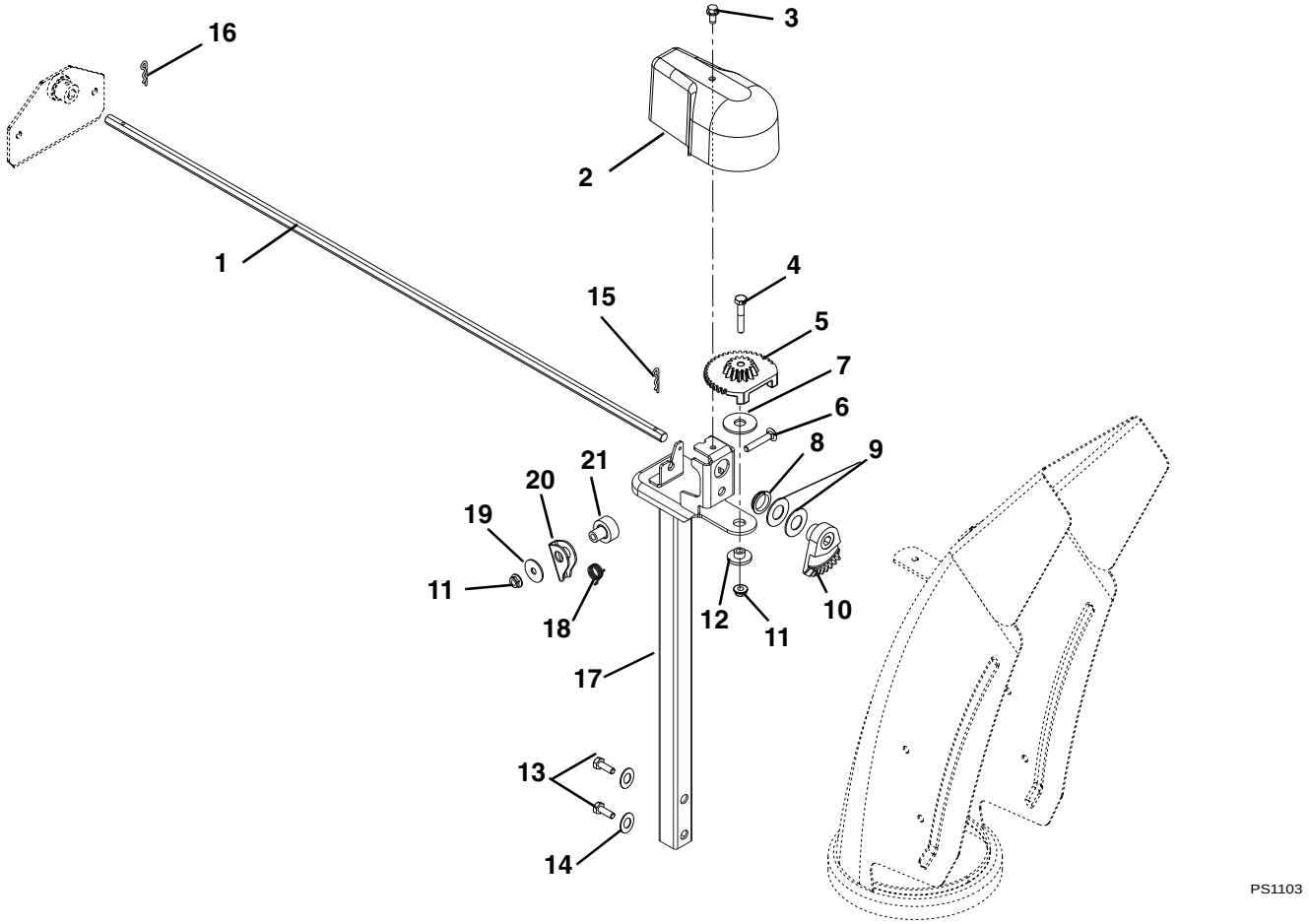

Item	Part No.	Qty.	Description
1	00389200	1	Rod, Chute Rotation - Hex
2	00261700	1	Cover, Chute Gear
3	07400034	1	Screw, Tapping Hex Washer Head .25-20 x .50
4	05952500	1	Bolt, Hex .25-20 x 1.50 Grade 5
5	03898700	1	Gear, Chute
6	06222300	1	Bolt, Round Head Square Neck .25-20 x 1.50 Grade 5
7	06400904	1	Washer, Flat Nylon .515 x 1.375 x .093
8	05500027	1	Bushing, Polyliner .75 Snap-in
9	06441400	2	Washer, Flat Steel .754 x 1.125 x .062
10	00184300	1	Gear, Chute - Actuation
11	06543500	2	Nut, Locking Top Flange .25-20
12	05500920	1	Bushing, Flange
13	05958500	2	Bolt, Hex .38-16 x 1.75 Grade 5
14	06308800	2	Washer, Locking .38 x .094
15	06944800	1	Clip, Spring
16	06712900	1	Hairpin, # 7 .094 x 2.31
17	03897451	1	Pedestal, Chute - Quick Stick
18	08300014	1	Spring, Torsion
19	06426600	1	Washer, Flat Steel .281 x 1.00 x .063
20	00180900	1	Arm, Locking
21	05500024	1	Bushing, Lock Arm

https://truckmanualshub.com/

GEAR CASE-ALUMINUM

Model All

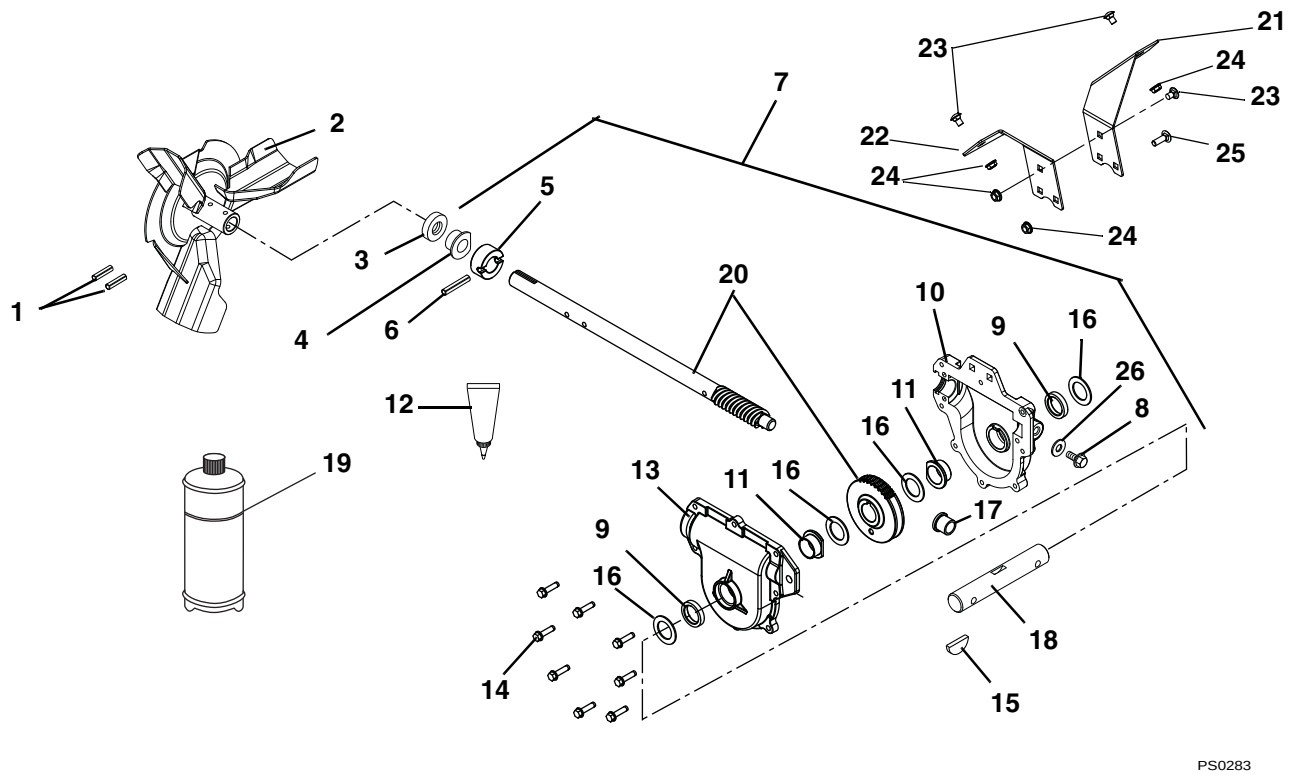

Item	Part No.	Qty.	Description
1	05803700	2	Pin, Roll .25 x 1.75
2	00485551	1	Impeller 14" O.D. 3-Blade
3	05600001	1	Seal, Oil
4	05500008	1	Bushing, Flange
5	00255100	1	Thrust Collar
6	05806800	1	Pin, Groove .25 x 1.50 Type E
7	52101000	AR	Case, Gear Aluminum (Contains Items 3-6, 8-18, 20, 26)
8	07417000	1	Screw, Tapping Rolok .38-16 x .75
9	05618800	2	Seal, Oil
10	00254100	1	Gearcase, Casting Left Hand
11	05520500	2	Bushing, Flange
12	00031700	1	Locktite 518 Gasket--6ML Tube
13	00254000	1	Gearcase, Casting Right Hand
14	07412400	8	Screw, Tapping Hex Washer Head .25-20 x 1.00
15	06608800	1	Key, Woodruff .25 x .875 Hardened
16	06436300	4	Washer, Flat-Steel 1.010 x 1.505 x .062
17	05500007	1	Bushing, Flange
18	00485400	1	Rake Shaft
19	00008000	1	Ariens 16 Oz. Bottle of L2 Lube (5.0 oz. capacity)
20	52100900	1	Worm Shaft and Gear
21	00485051	1	Bracket, Gearcase Support LH
22	00485151	1	Bracket, Gearcase Support RH
23	06200118	3	Bolt, Round Head Square Short Neck .31-18 x .62
24	06543100	5	Nut, Locking Top Flange .31-18
25	06216100	2	Bolt, Round Head Square Neck .31-18 x 1.00 Grade 5
26	06442500	1	Washer, Fiber

https://truckmanualshub.com/

ELECTRICAL AND WIRING DIAGRAM

Model 921012, 013, 015, 016, 017, 018, 020, 305, 306, 307, 311, 312

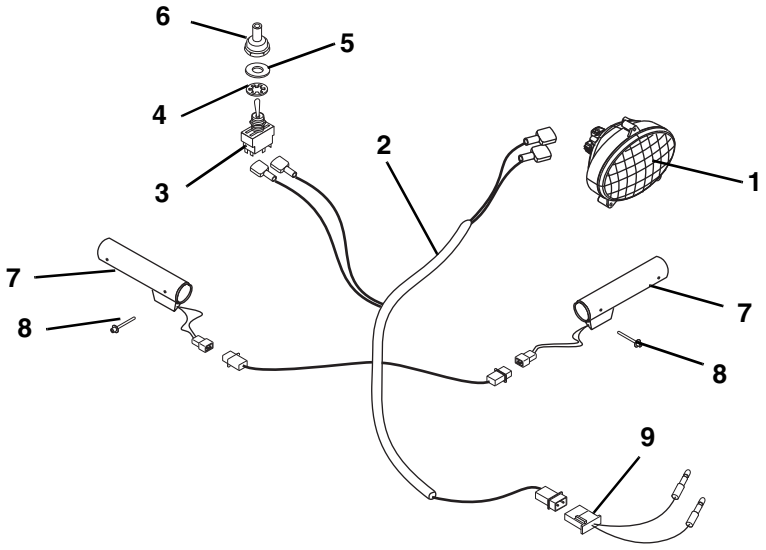

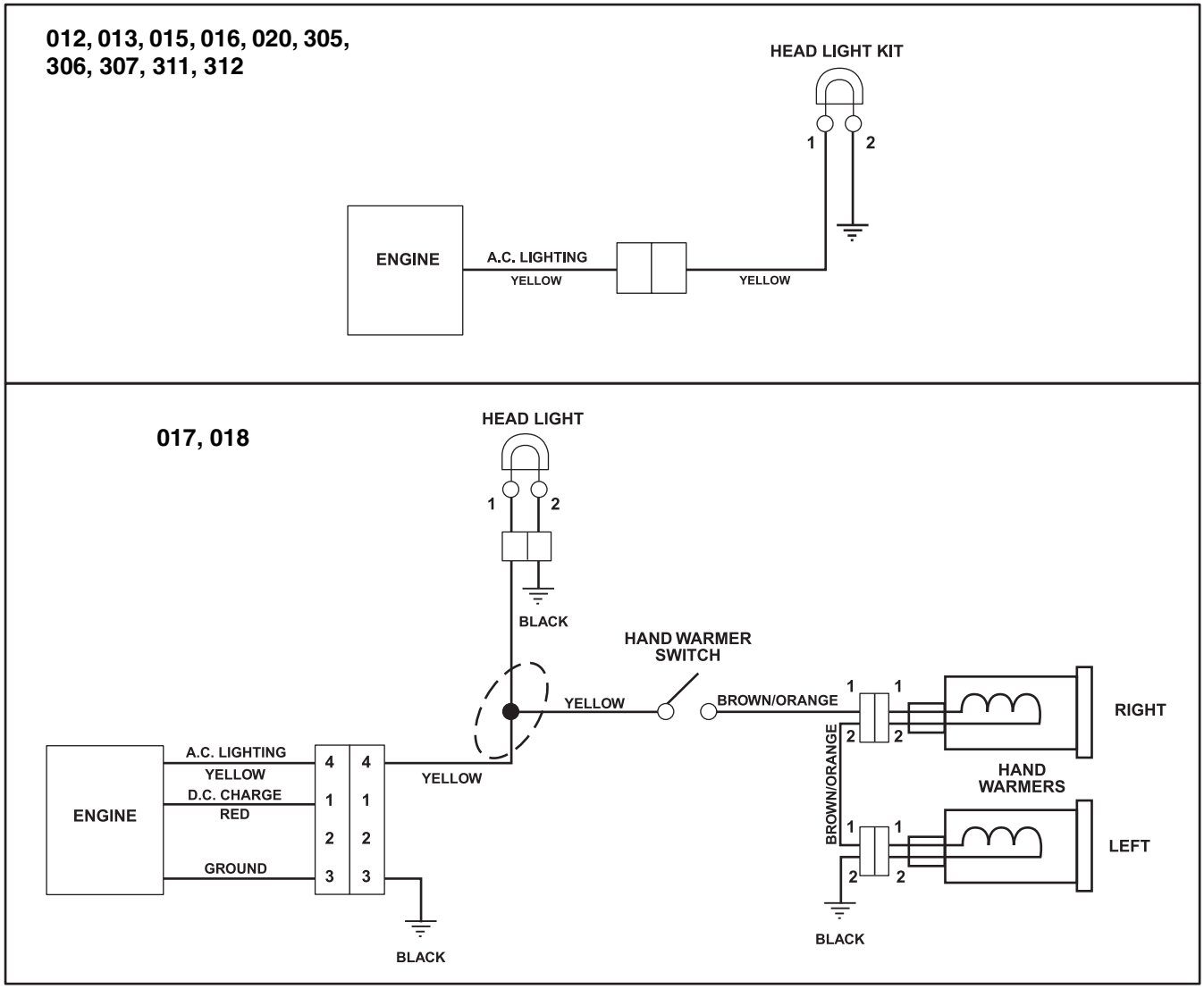

https://truckmanualshub.com/

ELECTRICAL AND WIRING DIAGRAM

Model 921012, 013, 015, 016, 017, 018, 020, 305, 306, 307, 311, 312

Item	Part No.	Qty.	Description
1	00432500	1	Light, Halogen Assembly (012, 013, 015, 016, 017, 018, 305, 306, 307, 311, 312)
	03917500	1	Light, Halogen Assembly (020)
2	00432200	1	Harness, Wire Light w/1-pin (012 SN 000101 - 003499)
	03883500	1	Harness, Wire Light w/2-pin (012 SN 003500 and up, 013, 015, 016, 020, 305, 306, 307, 311, 312)
	03883900	1	Harness, Wire, Light and Heated Hand Grips w/2-pin (017, 018)
3	02485700	1	Switch, On/Off Heated Hand Grips (017, 018)
4	06310900	1	Washer, Locking Internal .563 x .040 (017, 018)
5	06403800	1	Washer, Flat Steel .505 x .875 x .024 (017, 018)
6	09207600	AR	Boot, Switch (Optional) (017, 018)
7	07500015	2	Heated Hand Grip (017, 018)
8	06800038	4	Rivet, Pop #43 .125 x .313 (017, 018)
9	03972400	1	Adapter, Harness (020)

https://truckmanualshub.com/

Ariens Company
655 West Ryan Street
P.O. Box 157
Brillion, WI 54110-0157
920-756-2141
Fax 920-756-2407
www.ariens.com