AW 240-1140

STATIC LINEAR LOADS
from 12.25 to 38 kg/cm

OPERATING WEIGHTS
from 2,450 to 15,400 kg

MADE IN GERMANY

weycor
BY ATLAS WEYHAUSEN

nualshub.com/

TABLE OF CONTENTS

weycor 3

Tandem rollers 4
Technical highlights 6
AW 240 8
AW 260 10
AW 300 12

Compaction rollers 14
Technical highlights 16
Cabin highlights 20
Vibratory system 22
Compaction controls 26
Drums 30
Canopy 31
Engines and traction 32
AW 1070 36
AW 1080 38
AW 1110 40
AW 1120 42
AW 1130 44
AW 1140 46

Configuration variants 48

POWERFUL COMPACTION TECHNIQUE. RELIABLE QUALITY.

weycor tandem and compaction rollers vouch for technical excellence, for powerful and reliable machines and for quality "Made in Germany". In their respective domain, they exceed the currently applicable emission standards.

In order to highlight these features, for the first time ever, we decided to provide the new ATLAS Weyhausen model series with its own unique name: "weycor".

The first syllable refers to the name of the founder of our company and hisfamily, "Weyhausen". The second syllable is derived from the English term "core".

"We are convinced that the new tandem and compaction rollers will soon be an essential part - the "core"- of every construction site." In this sense, "weycor" also defines the key competencies of our successful family business: for more than forty years, our passion for construction machinery has been at the core of our production, and we keep putting our heart and soul into our products!

WEYCOR EST. 1971 TRADITION

TANDEM ROLLERS

https://truckmanualshub.com/

TECHNICAL HIGHLIGHTS

weycor tandem rollers boast solid and innovative technology with perfectly design operation and service concepts. Three tandem rollers with operating weights of 2.4 to 3 t perform many different applications in road construction and landscaping. For construction and rental companies!

Largest water tank in this weight class
Sprinkler system with pump and interval timer as standard:

Economical water lubrication on the drum surface as long as possible without interruption to compact the hot asphalt as long as needed without sticking on the drum surface.

Vibration front and rear as standard activated separately
Allows sensitive compaction in the first crossings.

Folding rops standard
For a low transport height.

Decoupled operating platform
Fatigue-free operation of the machine without disability by decoupling from the frame.

Greatest drum diameter in this weight class

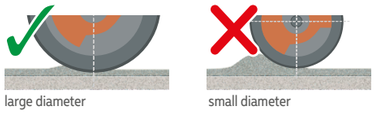

The practice has shown that a larger drum diameter has positive effects on the eveness after the compaction process. This is, among other, proven by the following formula:

$$N = \frac{\text{Static linear load in kg/cm}}{\text{Bandages diameter in cm}} = \text{kg/cm}^2$$

Here is vividly illustrated that the lower the result is, the more is the load on the hot asphalt surface reduced. This load reduction prevents against the well known micro-grooves in the transverse direction.

No lubricating points
All pivot points of the roller are adapted for life not be lubricated to need, which turns into time and money savings.

Drum offset
The front drum is offset by 50 mm to the right side and therefore creating more room for steering corrections when flush compaction on edges are necessary.

Vibration automatic standard
To avoid cross-grooves when change direction, the vibration is switched off briefly at the moment of direction change and then automatically re-enabled.

https://truckmanualshub.com/

AW 240

Standard equipment

- ROPS roll bar, foldable
- Hydrostatic drive
- Hydrostatic vibration system at both drums
- 2 centrifugal forces, 2 frequencies
- Automatic vibration mode
- Double / single vibration
- Pressurized interval sprinkler system
- Both drums equipped with spring-loaded brakes
- Manual emergency stop switch with touch sensitive switch at the seat
- 2 resilient vulcollan scraper blades per drum
- Spring-mounted driver's compartment
- 4 working headlights
- Laterally slidable driver's seat with arm rests and safety belt
- Lockable dashboard

Options

- Lighting according to Road Traffic Regulations (StVZO)
- Back up alarm
- Battery main switch
- Rotating beacon
- Edge cutting and pad roller
- Special color
- Environmentally friendly hydraulic fluid

Operating data AW 240

Operating weight CECE	**2,700 kg**
Load in transport position (full diesel & empty water tanks)	**2,450 kg**
Average axle load CECE	**1,350 kg**
Engine output	**22.5 kW (30 HP)**

Compaction performance	
Average linear drum load	**13.50 kg/cm**
Amplitude	**0.5 mm**
Frequency I / II	**53 / 61 Hz**
Centrifugal force I / II	**21.5 / 28 kN**

Bandage	
Drum width	**1,000 mm**
Lateral drum offset	**50 mm**
Working width	**1,050 mm**
Drum diameter	**750 mm**
Drum shell thickness	**12 mm**

Sound level	
Average acoustic power-level LWA(1)	**100.1 dB(A)**
Guaranteed acoustic power-level LWA(2)	**101.0 dB(A)**
Sound pressure level LPA(3)	**83.0 dB(A)**
Specific vibration-data Hand- / arm- / bodyvibration(4)	**< 2.5/0.5 m/s²**

Drive	
Speed	**0 – 9 km/h**
Angular movement	**± 12°**
Gradeability with / without vibration	**30 % / 35 %**
Engine-Model	**Deutz**
Type	**D 2011 L2i**
Emission	**Tier 3**
Fuel capacity	**50 l**
Hydraulic oil capacity	**40 l**

Sprinkler system	
Tank capacity	**210 l**

(1) According to 2000/14/EG & appendixes. (2) According to 2000/14/EG & appendixes.
(3) According to ISO 6396. (4) According to ISO 8041.

Technical data AW 240

Distance between axles (A)	**1,830 mm**
Width (B)	**1,180 mm**
Road clearance (D)	**166 mm**
Height (H)	**2,720 mm**
Drum diameter (H1)	**750 mm**
Length (L)	**2,670 mm**
Turning radius	
- inside (R)	**2,865 mm**
- outside (R1)	**3,865 mm**
Working width incl. offset (W)	**1,050 mm**
Drum width (W1)	**1,000 mm**
Steering angle (α)	**±30°**

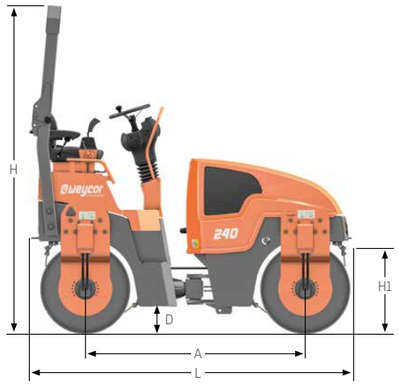

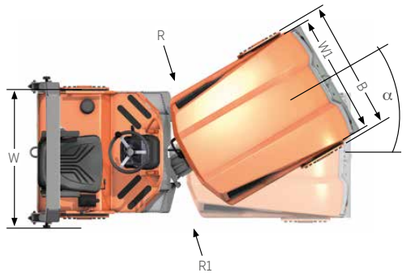

https://truckmanualshub.com/

AW 260

Standard equipment

- ROPS roll bar, foldable
- Hydrostatic drive
- Hydrostatic vibration system at both drums
- 2 centrifugal forces, 2 frequencies
- Automatic vibration mode
- Double / single vibration
- Pressurized interval sprinkler system
- Both drums equipped with spring-loaded brakes
- Manual emergency stop switch with touch sensitive switch at the seat
- 2 resilient vulcollan scraper blades per drum
- Spring-mounted driver's compartment
- 4 working headlights
- Laterally slidable driver's seat with arm rests and safety belt
- Lockable dashboard

Options

- Lighting according to Road Traffic Regulations (StVZO)
- Back up alarm
- Battery main switch
- Rotating beacon
- Edge cutting and pad roller
- Special color
- Environmentally friendly hydraulic fluid

Operating data AW 260

Operating weight CECE	**2,900 kg**
Load in transport position (full diesel & empty water tanks)	**2,700 kg**
Average axle load CECE	**1,450 kg**
Engine output	**22.5 kW (30 HP)**

Compaction performance	
Average linear drum load	**12.08 kg/cm**
Amplitude	**0.5 mm**
Frequency I / II	**53 / 61 Hz**
Centrifugal force I / II	**25 / 34 kN**

Bandage	
Drum width	**1,200 mm**
Lateral drum offset	**50 mm**
Working width	**1,250 mm**
Drum diameter	**750 mm**
Drum shell thickness	**12 mm**

Sound level	
Average acoustic power-level LWA(1)	**100.1 dB(A)**
Guaranteed acoustic power-level LWA(2)	**101.0 dB(A)**
Sound pressure level LPA(3)	**83.0 dB(A)**
Specific vibration-data Hand- / arm- / bodyvibration(4)	**< 2.5/0.5 m/s²**

Drive	
Speed	**0 – 9 km/h**
Angular movement	**± 12°**
Gradeability with / without vibration	**30 % / 35 %**
Engine-Model	**Deutz**
Type	**D 2011 L2i**
Emission	**Tier 3**
Fuel capacity	**50 l**
Hydraulic oil capacity	**40 l**

Sprinkler system	
Tank capacity	**210 l**

(1) According to 2000/14/EG & appendixes. (2) According to 2000/14/EG & appendixes.
(3) According to ISO 6396. (4) According to ISO 8041.

Technical data AW 260

Distance between axles (A)	**1,830 mm**
Width (B)	**1,364 mm**
Road clearance (D)	**166 mm**
Height (H)	**2,720 mm**
Drum diameter (H1)	**750 mm**
Length (L)	**2,670 mm**
Turning radius	
- inside (R)	**2,765 mm**
- outside (R1)	**3,965 mm**
Working width incl. offset (W)	**1,250 mm**
Drum width (W1)	**1,200 mm**
Steering angle (α)	**±30°**

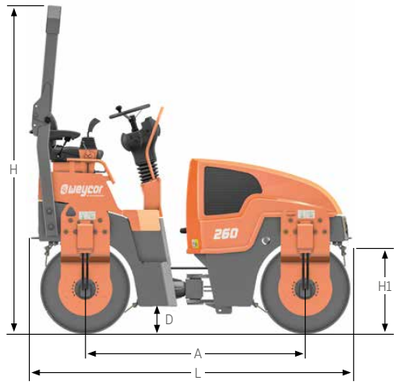

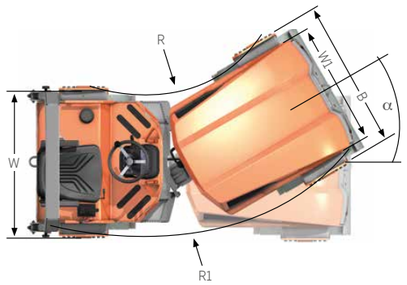

https://truckmanualshub.com/

AW 300

Standard equipment

- ROPS roll bar, foldable
- Hydrostatic drive
- Hydrostatic vibration system at both drums
- 2 centrifugal forces, 2 frequencies
- Automatic vibration mode
- Double / single vibration
- Pressurized interval sprinkler system
- Both drums equipped with spring-loaded brakes
- Manual emergency stop switch with touch sensitive switch at the seat
- 2 resilient vulcollan scraper blades per drum
- Spring-mounted driver's compartment
- 4 working headlights
- Laterally slidable driver's seat with arm rests and safety belt
- Lockable dashboard

Options

- Lighting according to Road Traffic Regulations (StVZO)
- Back up alarm
- Battery main switch
- Rotating beacon
- Edge cutting and pad roller
- Special color
- Environmentally friendly hydraulic fluid

Operating data AW 300

Operating weight CECE	**3,000 kg**
Load in transport position (full diesel & empty water tanks)	**2,800 kg**
Average axle load CECE	**1,500 kg**
Engine output	**22.5 kW (30 HP)**
Compaction performance	
Average linear drum load	**12.00 kg/cm**
Amplitude	**0.5 mm**
Frequency I / II	**52 / 58 Hz**
Centrifugal force I / II	**29 / 37 kN**
Bandage	
Drum width	**1,250 mm**
Lateral drum offset	**50 mm**
Working width	**1,300 mm**
Drum diameter	**750 mm**
Drum shell thickness	**12 mm**
Sound level	
Average acoustic power-level LWA(1)	**100.1 dB(A)**
Guaranteed acoustic power-level LWA(2)	**101.0 dB(A)**
Sound pressure level LPA(3)	**83.0 dB(A)**
Specific vibration-data Hand- / arm- / bodyvibration(4)	**< 2.5/0.5 m/s²**

Drive	
Speed	**0 – 9 km/h**
Angular movement	**± 12°**
Gradeability with / without vibration	**30 % / 35 %**
Engine-Model	**Deutz**
Type	**D 2011 L2i**
Emission	**Tier 3**
Fuel capacity	**50 l**
Hydraulic oil capacity	**40 l**
Sprinkler system	
Tank capacity	**210 l**

(1) According to 2000/14/EG & appendixes. (2) According to 2000/14/EG & appendixes.
(3) According to ISO 6396. (4) According to ISO 8041.

Technical data AW 300

Distance between axles (A)	**1,830 mm**
Width (B)	**1,414 mm**
Road clearance (D)	**166 mm**
Height (H)	**2,720 mm**
Drum diameter (H1)	**750 mm**
Length (L)	**2,670 mm**
Turning radius	
- inside (R)	**2,740 mm**
- outside (R1)	**3,990 mm**
Working width incl. offset (W)	**1,300 mm**
Drum width (W1)	**1,250 mm**
Steering angle (α)	**±30°**

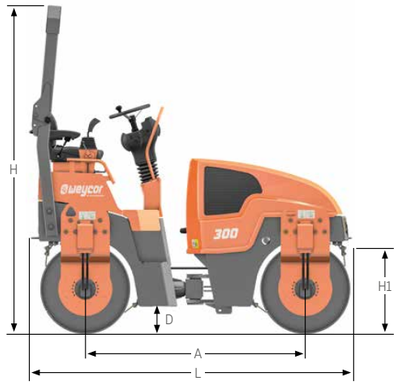

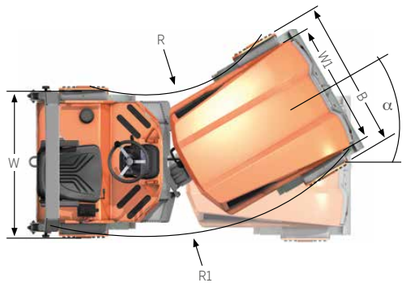

COMPACTION ROLLERS

https://truckmanualshub.com/

TECHNICAL HIGHLIGHTS

weycor Single Drum Rollers boast solid and innovative technology with perfectly designed operation features and a clever service concept for less operating costs. They are six models covering the weight classes of 7 to 14 t and are worldwide proved to perform in many different applications and conditions: road construction and maintenance, industrial buildings, dam and dyke erecting.

Comfortable panoramic rops cabin
The steering column and the ergonomic arrangement of the operating controls and compaction measurement devices ensure safe operation and help prevent tiredness. Special cabin bearings serve to cushion vibrations. Thanks to her innovative design, the windshield reflects sound waves and lowers the noise level. In addition, a swiveling seat can be installed as an optional feature. Also available with air conditioning.

360° panoramic view for optimal on-the-job safety
Excellent circumferential visibility, even in reverse gear, is established by a chamfered engine hood and a very compact design. ROPS cabin with individually adjustable operating elements.

Engine
The state-of-the-art low-emission diesel engines that are at work in all weycor compaction rollersare up to the standards set by everyday heavyduty operation. Substantial power reserves and efficient water cooling serve to spare you trouble, even at extreme outside temperatures up to 55°C and on problematic grounds. Their durability and low fuel consumption account for their cost-effectiveness, their special engine bearings for a noticeable reduction of the noise development.

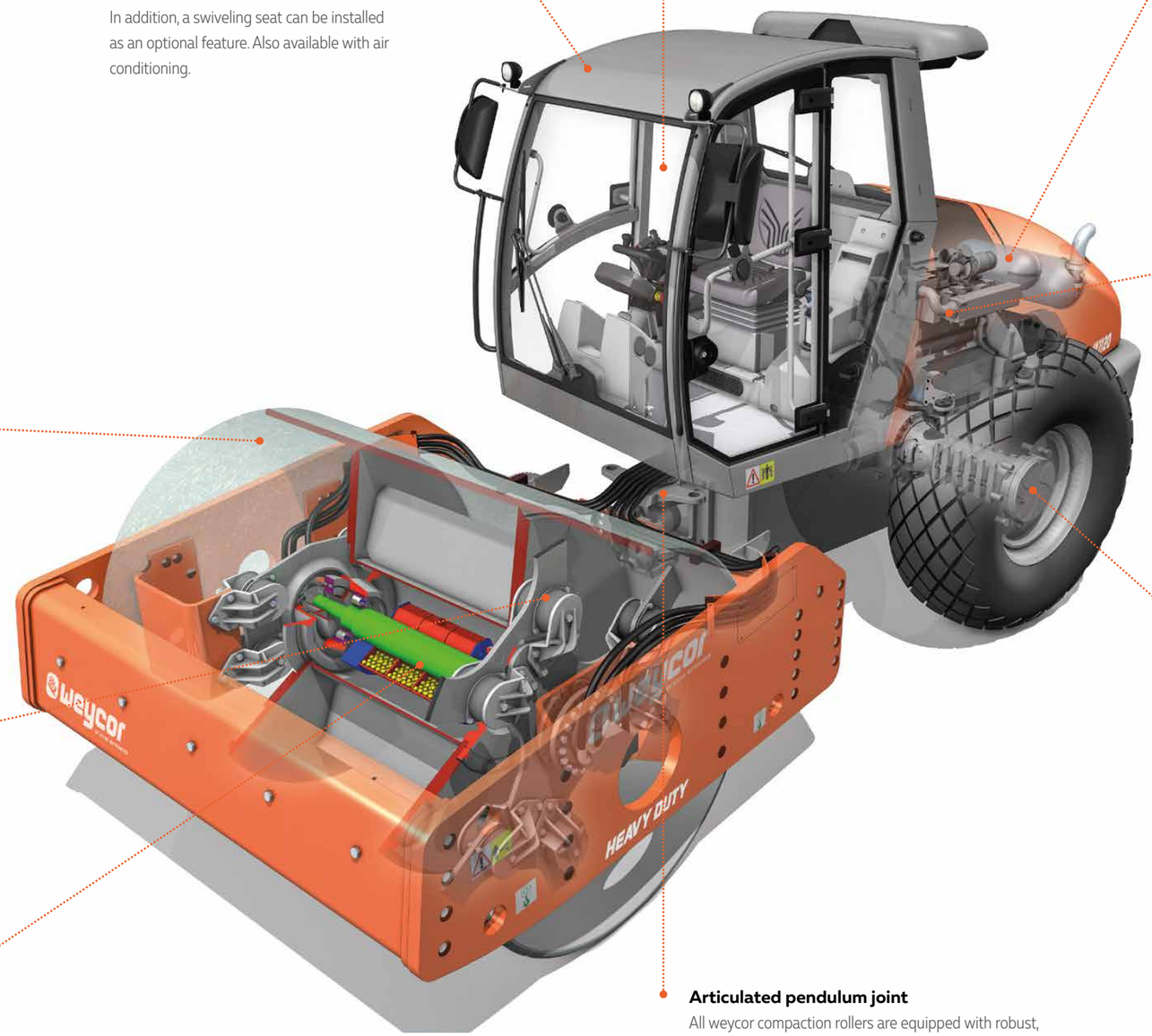

ECO-Mode
This optional feature allows you to use the power of the hydraulic units that the compaction roller is equipped with to full capacity, in a particularly efficient way. Use ECO-Mode to reduce the diesel engine revolution by approx. 400 r.p.m., as compared to the nominal rotation speed, without any loss of power of the hydraulic system. While the vibration frequencies and the centrifugal forces remain constant, the noise exposure both for the driver and the environment as well as the fuel consumption are reduced by up to 30%.

Front frame and drum
The entire front frame – with the exception of the crossbeams – is welded in order to ensure maximum stability. On wet and cohesive soils, the optional front and rear scrapers serve to remove accumulated material.The smooth drum can be converted into a pad foot drum by attaching an optional segment kit. The drum unit can easily be dismounted without a lifting tool. The front frame and the drum provide the static force.

No-spin axle
Thanks to its permanent differential lock, the no-spin axle provides for the best traction and maximum climbing power, which applies to all weycor compaction rollers at all times. Whenever different rotational speeds at the wheels are caused by operation on winding routes, the differential lock is automatically deactivated and will not be re-activated unless the wheels run synchronously again. The no-spin axle is a standard feature of all weycor compaction rollers.

Vibration
2-stage vibratory system with high compaction capacity. Two frequencies and two amplitudes can be selected for surface and deep compaction. Big exterior bearings greased by an oil bath guarantee long inspection intervals.

Articulated pendulum joint
All weycor compaction rollers are equipped with robust, maintenance-free articulated pendulum joints. They cause the front and the rear end to run in a single track and create a very low center of gravity. With an angle of 35 degrees and a pivoting angle of 12 degrees, an exceptional maneuverability is ensured.

Maintenance
In order to ensure quick and trouble-free maintenance, all relevant aggregates are easy to reach via the engine hood, which can be opened widely. Maintenance-free or low-maintenance components, such as the vibratory system or the articulated pendulum joint, serve to further reduce the time and effort to be spent on maintenance.

HA-Control
Perfect adaptation to different types of soil is ensured by the high pressure-dependent control by Bosch-Rexroth. By double-pump system and a continuous tractive force adjustment automatically provides the axle and the roller drum with maximum traction – without any intervention on the part of the driver. This results in an automatic traction control and a noticeably improved climbing ability, especially in areas such as dike and embankment construction.

https://truckmanualshub.com/

https://truckmanualshub.com/

KEEP IT COOL!

Air conditioner:
This new state-of-the-art system ensures the most efficient airflow inside the cab providing even more comfort to the roller driver.

CLEVER IDEA: A ROLLER WITH REAR-HINGED DOOR!

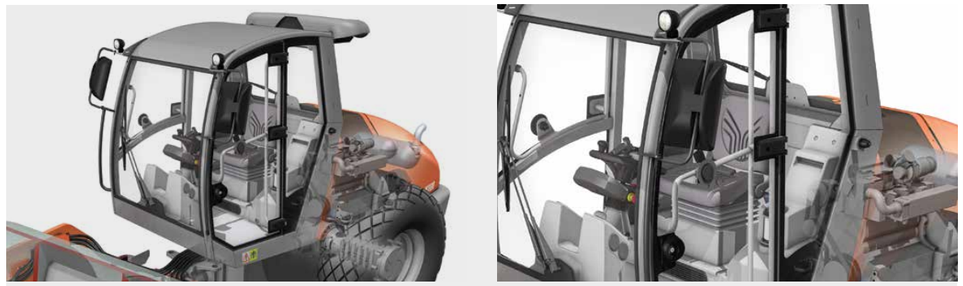

Doors:
Atlas Weyhausen is the only manufacturer that proposes the door opening 180° backwards, with a fast snap-fit system! The access to the operational cabin is safer.

EXCELLENT JOBSITE VISIBILITY

Field of view:
- **Full glass cab with the best all-round visibility**
- **Front and rear windscreen wipers are standard**
- **Rear window defroster is standard. Large mirrors for safe and wide rear view**
- **Four work lights (two in front, two rear) as standard (optional also available as LED)**

ELECTRONIC FUNCTIONS

Comfortable operation:
- **Optional radio with Bluetooth to stream music from mobile phone, including hands-free syste**
- **Heating adjustment, standard, or full air conditioning system (optional)**
- **weycor compaction meter display placed inside the cabin to the driver's field of view**
- **High-quality fabric roof for maximum sound absorption**

INTUITIVE OPERATION

Operation:
- **The only manufacturer to propose adjustable steering column with two bending positions and one extendable**
- **New ergonomic joystick with pre-defined engine RPM (No predefined RPM are available for Tier 2 engine)**
- **Ergonomic armrest with modern switches**
- **Overmodulation of the drum, or rear axle, hydraulic engine for better traction while driving on heavy soil or slopes**

https://truckmanualshub.com/

WEYCOR VIRBRATORY SYSTEM

Ready for all tasks

The weycor vibratory system is fit to master all types of compaction work. The amount of energy required to achieve the desired degree of compaction can be set by means of two amplitudes and the automatic rotational speed adjustment: High centrifugal forces and a low frequency for deep compaction, lower centrifugal forces and high frequencies for surface compaction. Not only is the weycor vibratory system very robust, but easy to maintain as well: Big exterior bearings greased by an oil bath provide the basis for extra-long maintenance intervals. Thanks to the novel design, none of the bearings is hard to reach any more.

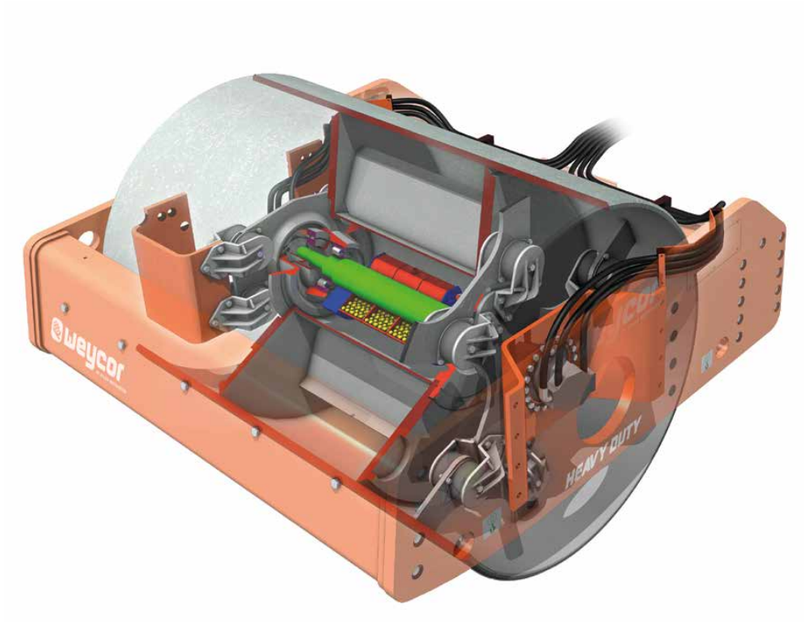

A powerful principle

The unbalanced mass is composed of a static and a variable part. The static part consists of a constant flyweight on the shaft while the variable part is created by a staggered housing with a mutable mass. Depending on the rotational direction of the vibratory shaft, the variable mass is added to or subtracted from the constant mass via the flyweight. Thus, a larger or smaller amplitude is created.

The most important parameters to achieve deep compaction are: drum load, static linear load, the eccentric mass, amplitudes and frequencies.

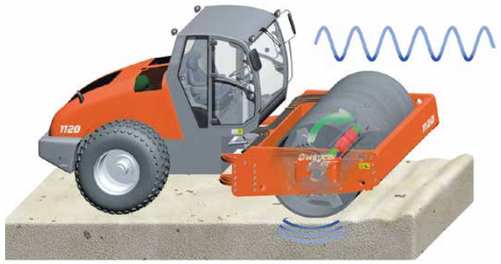

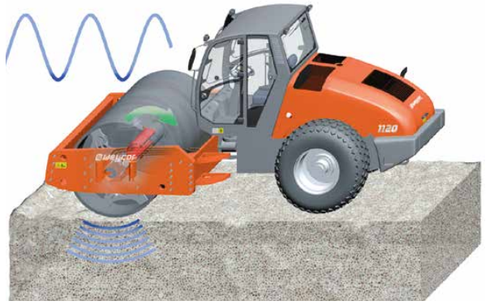

Small amplitude
(fields of application when compacting thin layers)

- Gravel, sand, mixed soils
- Gravel and crushed stone basis
- Surface compaction

Large amplitude
(fields of application for the compaction of thick layers)

- Non-cohesive and cohesive soils
- Gravel and crushed stone basis
- Hydraulically bonded layers
- Anti-freeze layers
- Substratum
- Dikes, dams

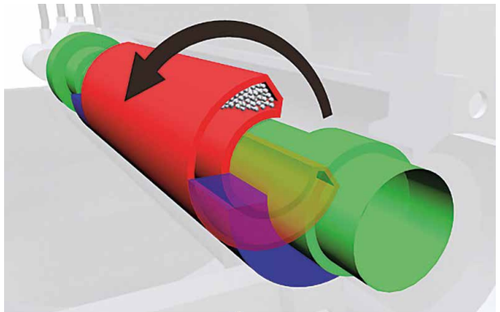

Small amplitude – high rotational speed.

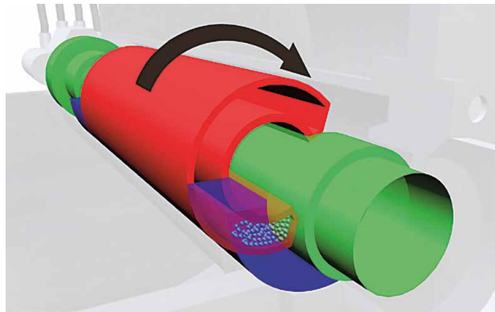

Large amplitude – low rotational speed.

https://truckmanualshub.com/

COMPACTION PERFORMANCE

Maximal compaction depth (cm)

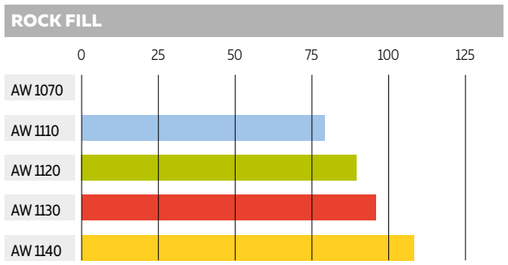

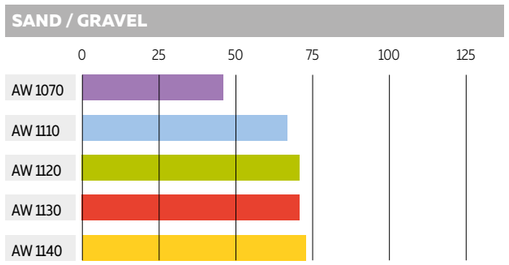

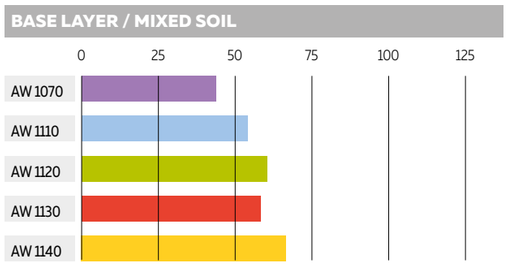

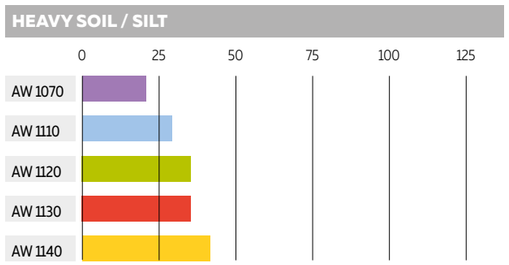

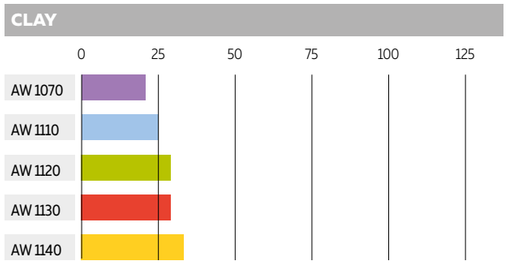

COMPACTION CAPACITY

Compaction capacity (m^3/h)

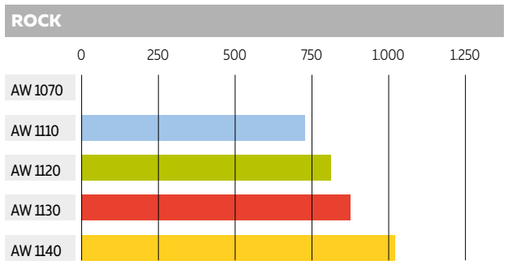

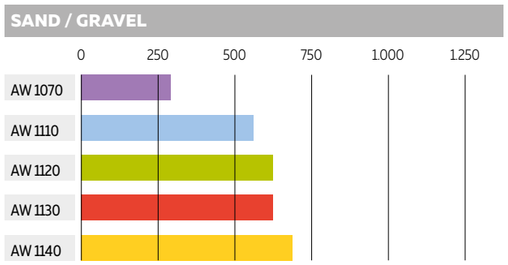

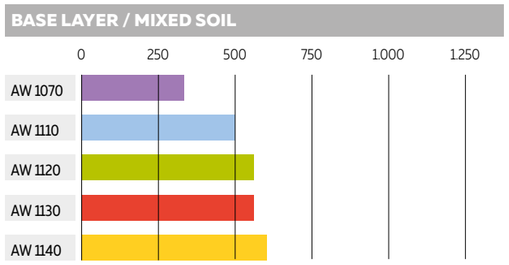

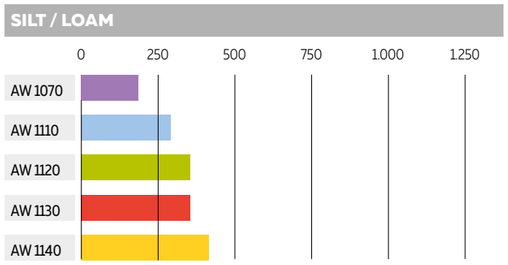

https://truckmanualshub.com/

COMPACTION CONTROLS

It is better to be well controlled – and documented

On many construction sites, it is an obligatory requirement that compaction is continuously checked, controlled and documented if required. weycor provides various digital systems, which can be used to automatically measure, record and analyse the entire compaction process. Thus, any weak spots can be detected reliably without spending a lot of time. The systems work with an acceleration sensor, which is mounted on an undamped vibrating part of the drum.

Effective entry option: The intuitive analogue display

With this special display, the roller driver can manage the compaction process in real time. For every pass, by track and by layers, the system records different stiffness values and displays them to the driver on a relative scale of 0-100. When those values stop rising, that means that no further compaction improvement is possible with the roller.

Easy-to-read display

The compaction increase is displayed on a LED scale of 0-100.

Avoid unnecessary compaction runs

The progress and end of the compaction work is visualised by the LEDs: the driver rolls until the display value stops increasing.

Prevents excess compaction

The jump light warns in time against grain fragmentation and damage to the machine.

Identify sites and areas that cannot be compacted

When rolling for the first time, a change in the indication value signals to the driver whether the soil can be compacted.

Fully transparent compaction: Track monitor with optional printer

The track monitor informs the roller driver not only about the current compaction results, but also about the compaction process during the last compaction run.

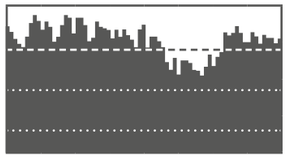

Target value specification and track display with zoom function

A monitor shows the current position of the roller in the track and its relation to the compaction target value. Smaller values can be reliably assessed using different zoom levels.

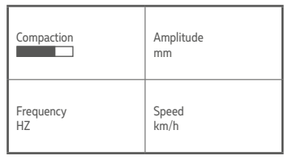

Clear display

The other half of the monitor displays the most important current values such as speed, frequency and amplitude.

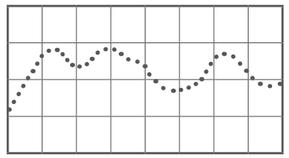

Optional recording and documentation of compaction

The compaction values of the current compaction run are stored up to a track length of 800 m. Thanks to the optional handy thermal printer the compaction data saved can be documented directly. To do this, the printer is simply connected to the track monitor via a cable. That way, the screen display of the compaction process can be printed out after each compaction run has ben completed. Furthermore, you can display all compaction data summarised as a detailed list and thus quickly make checks and controls.

https://truckmanualshub.com/

COMPACTION CONTROLS

Ahead of the times: weycor compdoc – the most modern measuring system of its kind
weycor CompDoc is currently the most modern measuring and recording system for large construction sites of all kinds, such as motorways, airports, or industrial and dam systems.

LCD display
All information is transferred to the LCD display in the cockpit by computer and clearly displayed there. The vibration behaviour of the drum is registered via the sensor, and used to calculate the value for the relative compaction at the time of the rolling process. The driver is thus informed at all times about the current values of all parameters: compaction, jump operation, amplitude, frequency and speed.

Ease of use
CompDoc stands out, above all also thanks to its ease of use: Simply start the engine, wait for satellite reception and immediately drive off without further input! Recording starts automatically as soon as the vibration starts.

Portable device
The portable device is fitted with a quick release and can therefore easily be used on multiple machines.

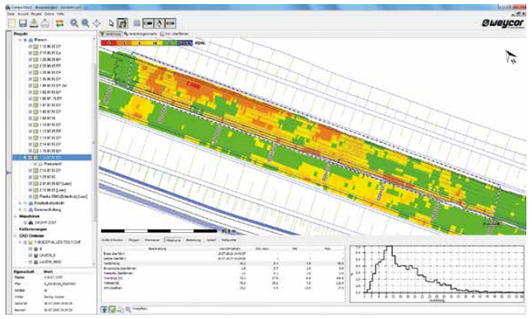

The features at a glance

- Administration and monitoring in real time from the office (optional modem): Wireless bi-directional GPRS transfer to and from the server – all without a USB stick
- Fully suitable for fleet use thanks to GPRS mobile communications – even at large distances: As a result, there are no range limitations, as is the case with Wi-Fi
- Standard-GPS accuracy <30 cm: Accuracy up to 1 cm possible
- Vertical colour display: Clearer and larger image section than on the horizontal displays
- Simultaneous interpretation in four different modes: Dynamic compaction runs, increase in compaction, measurement test run (plate load test at the end of the compaction work) and classic (plate load test)
- No knowledge of machining required
- Portable devices – universally applicable

https://truckmanualshub.com/

BANDAGEN

Smooth drum

Smooth drums are used during light to medium compaction work and are particularly suitable for asphalt and non-cohesive soils, such as sand, gravel or crushed stone. Parts subject to wear (strippers) can easily be replaced.

Smooth drum with PD shell kit

Thanks to the three-part shell kit, a smooth drum can be converted quickly and cost-effectively into a pad foot drum. The shells expand the field of application of the single-drum compactors, so that they can be used also on cohesive soils. Assembly and disassembly are very easy and can be done on the construction site.

- Fast assembly and disassembly
- Easy to clean
- The shell kit includes a complete set of cleaning chisels

Pad foot drum (PD drum)

PD drums consist of a smooth drum with additional welded-on trapezoidal pad feet. They are used for medium to heavy compaction work and are particularly suitable for for strongly cohesive soils with a high water content, such as clay or loam. The profile of the pad feet enlarges the surface area so that all moist, cohesive soils can dry out faster.

In contrast to a smooth drum with a PD shell kit, pad foot drums are installed in combination with a HD drive. This gives the roller more climbing ability and at the same time is more environmentally-friendly and more efficient, thanks to its lower gear reduction.

CANOPY

Standard equipment

- Ergonomically designed DeLuxe operator's platform with ROPS approval and triple adjustable steering column (foldable at two positions and 1x extendable). This means that the optimal seating position can be adjusted for the operator
- Newly-developed plastic roof with optimum rainwater discharge
- Electronic joystick allowing the machine to be operated comfortably and sensitively. It is integrated in the armrest, to optimally absorb the up and down movements together with the seat when driving over uneven terrain
- All switch functions are integrated in the armrest
- Non-slip strips on the floor provide a secure grip when ascending and descending, and even in bad weather
- Large compartment for storage space under the seat
- Equipped as standard with two exterior mirrors and four working headlights (2 at the front and 2 at the rear)
- Best possible overall view while giving protection thanks to the circumferential railing
- All electrical components have been designed for outdoor use – they resist and repel rain or dust, and are easy to clean

Optional

- Swivelling driver's seat
- LED working lights
- StVZo (German Road Traffic Licensing Regulations) lighting for driving on public roads
- Various rotating lights (rotating flashing beacons or LED flashing beacons)
- All available weycor displays for compaction measurements (see pages 26 - 28)

https://truckmanualshub.com/

ENGINES AND TRACTION

The best traction – automatically

In order to adapt the vehicle to different types of soil, the drive units of all weycor compaction rollers are equipped with a high pressuredependent control. Thanks to the continuous adjustment of the tractive force, maximum traction both at the axle and the roller drum (for type 1070, this applies to the roller drum only) is at your disposal at all times. As this is an automatic feature, there is no need for the driver to intervene. In comparison with conventional 4-stage drive units, this system results in more efficient traction control and a noticeably improved climbing ability, especially in areas such as dike and embankment construction.

The safest and strongest way to compact soil

Wherever stable grounds and new paths need to be created, weycor compaction rollers take to the job like a duck to water:
For road construction jobs, for dikes, for runways and railway lines or operation in landscaping. Our powerful engines and the versatile weycor vibratory system ensure fast, cost-effective work and excellent, presentable results.

With service weights ranging from 2,450 kg to 15,400 kg and state-of-the-art technology, they are ready to meet your compaction challenges:

- Innovative vibratory compaction technology
- Fine-tuning to individual soil features
- Computer-aided supervision and documentation

More power, less consumption: ECO-mode

ECO-Mode, an optional feature, allows for a particularly efficient exploitation of the power output of the hydraulic units. This system renders it possible to reduce the motor rotation speed by approx. 400 r.p.m., as compared to the nominal rotation speed, while all parameters regarding the machine's overall performance remain intact.

The intelligent hydraulic system automatically ensures that its resources can still be used to full capacity and both the vibration frequencies and the centrifugal forces remain unaffected. Noticeable outcomes of this innovative, optimized use of the hydraulic capacities: Not only does the vehicle consume less fuel, but the sound level in the cabin is lowered and hence both the driver's and the environment's noise exposure reduced – without any output losses of the hydraulic system.

It goes without saying that the driver can intervene and manually claim the full capacity of the drive unit at all times.

weycor ECO-Mode

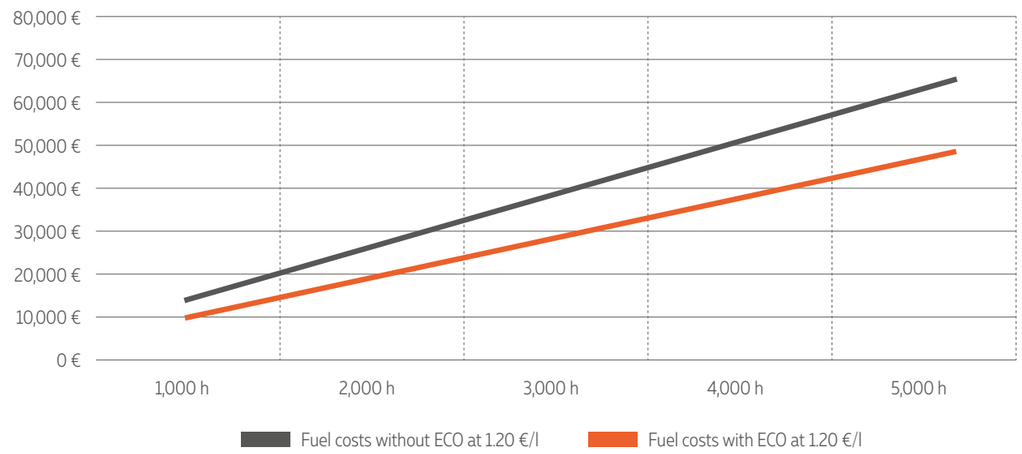

https://truckmanualshub.com/

https://truckmanualshub.com/

AW 1070

Standard equipment

- ROPS-Cabin with tinted glass, 1 door left and 1 window right, both lockable on 180°
- Maintenance-free centre-pivot steering
- Low-maintenance vibratory system with 2 amplitudes and 2 frequencies
- No-spin rear axle
- Two-stage hydrostatic drive and traction control with anti-slip at the drum (4 stage in HD-Drive)
- Both drives equipped with spring-loaded brake
- Adjustable driver's seat with armrest, adjustable steering column
- Emergency switch
- 4 working headlights
- Hot water heating with fresh-air fan

Optional

+ Sunshade Canopy with ROPS bar and waterproof seat
+ Air conditioning (for cabin version only)
+ Padfoot shell kit (3-part) for modification of a smooth drum
+ Spring steel scraper blade (for smooth drum only)
+ Vulcolan scraper blade (for smooth drum only)
+ Cyclone dust seperator
+ Battery main switch
+ Reverse gear alarm
+ Rotating light
+ Radio / Radio preparation
+ Special colour
+ weycor hydraulic fluid (environment-friendly)
+ Compaction measurement (digital display)
+ Compaction measurement with documentation function
+ Preparation for compaction measurement
+ Swivable driver's seat
+ LED working lights
+ HD-Drive for more gradeability
+ Pad-foot drum
+ Engine variants

Operating data AW 1070

Operating weight CECE	**7,100 kg***
Weight on front	**3,800 kg**
Weight on rear	**3,300 kg**
Compaction performance	
Linear drum load	**22.35 kg/cm**
Amplitude high / low	**1.6 / 0.7 mm**
Frequency I / II	**30 / 40 Hz**
Centrifugal force I / II	**120 / 90 kN**
Bandage	
Drum width	**1,700 mm**
Drum diameter	**1,250 mm**
Drum shell thickness	**20 mm**
Sound level	
Speed	**0 – 10 km/h**
Angular movement	**± 12°**
Gradeability with / without vibration	**45 % / 50 %**
Tyres	**16, 9 – 24**
Engine-Model / Engine output	**see page 48**
Fuel capacity	**167 l**
Hydraulic oil capacity	**68 l**
Geräuschpegel	
Average acoustic power-level LWA(1)	**104.1 dB(A)**
Guaranteed acoustic power-level LWA(2)	**106.0 dB(A)**
Sound pressure level LPA(3)	**76.0 dB(A)**
Specific vibration-data Hand- / arm- / bodyvibration(4)	**< 2.5/0.5 m/s²**

Operating data AW 1070 HD

Operating weight CECE	**7,100 kg***
Weight on front	**3,800 kg**
Weight on rear	**3,300 kg**
Linear drum load	**22.35 kg/cm**
Drum diameter	**1,250 mm**
Speed	**0 – 14 km/h**
Gradeability with / without vibration	**59 % / 62 %**
Tyres	**16, 9 – 24 TR**

Operating data AW 1070 PHD

Operating weight CECE	**7,700 kg***
Weight on front	**4,400 kg**
Drum diameter	**1,140 mm**
Speed	**0 – 14 km/h**
Gradeability with / without vibration	**59 % / 62 %**
Tyres	**16, 9 – 24 TR**

(1) According to 2000/14/EG & appendixes. (2) According to 2000/14/EG & appendixes.
(3) According to ISO 6396. (4) According to ISO 8041. *Depending on the engine variant.

Technical data AW 1070 / AW 1070 HD / AW 1070 PHD

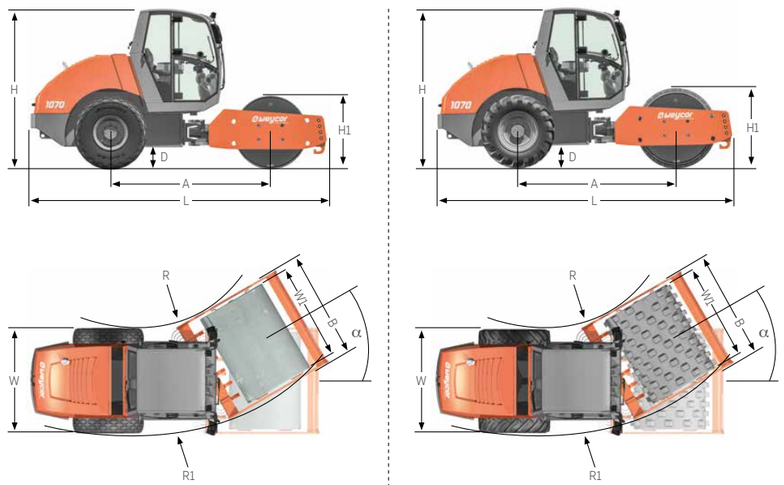

AW 1070 / AW 1070 HD | AW 1070 PHD

Distance between axles (A)	**2,720 mm**
Width (B)	**1,850 mm**
Road clearance (D)	**375 mm**
Height (H)	
- AW 1070 (H)	**2,723 mm**
- AW 1070 HD (H)	**2,723 mm**
- AW 1070 PHD (H)	**2,728 mm**
Drum diameter	
- AW 1070 (H1)	**1,250 mm**
- AW 1070 HD (H1)	**1,250 mm**
- AW 1070 PHD (H1)	**1,140 mm**
Length (L)	**5,032 mm**
Turning radius	
- inside (R)	**3,900 mm**
- outside (R1)	**5,600 mm**
Width about tyres (W)	**1,700 mm**
Drum width (W1)	**1,700 mm**
Steering angle (α)	**±30°**

https://truckmanualshub.com/

AW 1080

Standard equipment

- ROPS-Cabin with tinted glass, 1 door left and 1 window right, both lockable on 180°
- Maintenance-free centre-pivot steering
- Low-maintenance vibratory system with 2 amplitudes and 2 frequencies
- No-spin rear axle
- Two-stage hydrostatic drive and traction control with anti-slip at the drum (4 stage in HD-Drive)
- Both drives equipped with spring-loaded brake
- Adjustable driver's seat with armrest, adjustable steering column
- Emergency switch
- 4 working headlights
- Hot water heating with fresh-air fan
- HD-Drive for more gradeability

Optional

+ Sunshade Canopy with ROPS bar and waterproof seat
+ Air conditioning (for cabin version only)
+ Padfoot shell kit (3-part) for modification of a smooth drum
+ Spring steel scraper blade (for smooth drum only)
+ Vulcolan scraper blade (for smooth drum only)
+ Cyclone dust seperator
+ Battery main switch
+ Reverse gear alarm
+ Rotating light
+ Radio / Radio preparation
+ Special colour
+ weycor hydraulic fluid (environment-friendly)
+ Compaction measurement (digital display)
+ Compaction measurement with documentation function
+ Preparation for compaction measurement
+ Swivable driver's seat
+ LED working lights
+ Pad-foot drum
+ Engine variants

Operating data AW 1080

Operating weight CECE	**8,000 kg***
Weight on front	**4,400 kg**
Weight on rear	**3,600 kg**
Compaction performance	
Linear drum load	**25.88 kg/cm**
Amplitude high / low	**1.6 / 0.7 mm**
Frequency I / II	**30 / 40 Hz**
Centrifugal force I / II	**120 / 90 kN**
Bandage	
Drum width	**1,700 mm**
Drum diameter	**1,250 mm**
Drum shell thickness	**20 mm**
Sound level	
Speed	**0 – 14 km/h**
Angular movement	**± 12°**
Gradeability with / without vibration	**45 % / 50 %**
Tyres	**16, 9 – 24**
Engine-Model / Engine output	**see page 48**
Fuel capacity	**167 l**
Hydraulic oil capacity	**68 l**
Geräuschpegel	
Average acoustic power-level LWA(1)	**104.1 dB(A)**
Guaranteed acoustic power-level LWA(2)	**106.0 dB(A)**
Sound pressure level LPA(3)	**76.0 dB(A)**
Specific vibration-data Hand- / arm- / bodyvibration(4)	**< 2.5/0.5 m/s²**

(1) According to 2000/14/EG & appendixes. (2) According to 2000/14/EG & appendixes.
(3) According to ISO 6396. (4) According to ISO 8041. *Depending on the engine variant.

Technical data AW 1080

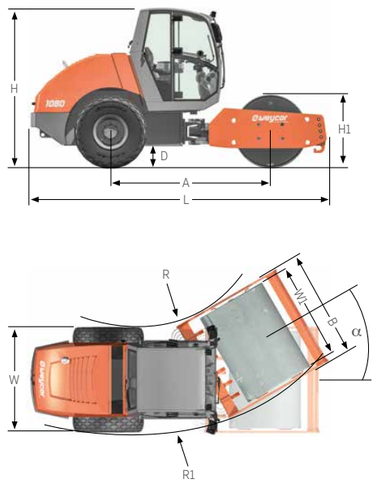

AW 1080

Distance between axles (A)	**2,720 mm**
Width (B)	**1,850 mm**
Road clearance (D)	**375 mm**
Height (H)	
- AW 1080 (H)	**2,723 mm**
Drum diameter	
- AW 1080 (H1)	**1,250 mm**
Length (L)	**5,032 mm**
Turning radius	
- inside (R)	**3,900 mm**
- outside (R1)	**5,600 mm**
Width about tyres (W)	**1,700 mm**
Drum width (W1)	**1,700 mm**
Steering angle (α)	**±30°**

https://truckmanualshub.com/

AW 1110

Standard equipment

- ROPS-Cabin with tinted glass, 1 door left and 1 window right, both lockable on 180°
- Maintenance-free centre-pivot steering
- Low-maintenance vibratory system with 2 amplitudes and 2 frequencies
- No-spin rear axle
- Four-stage hydrostatic drive and traction control with anti-slip at the drum
- Both drives equipped with spring-loaded brake
- Adjustable driver's seat with armrest, adjustable steering column
- Emergency switch
- 4 working headlights
- Hot water heating with 3-stage fresh-air fan

Optional

+ Sunshade Canopy with ROPS bar and waterproof seat
+ Air conditioning (for cabin version only)
+ Padfoot shell kit (3-part) for modification of a smooth drum
+ Spring steel scraper blade (for smooth drum only)
+ Vulcolan scraper blade (for smooth drum only)
+ Cyclone dust seperator
+ Battery main switch
+ Reverse gear alarm
+ Rotating light
+ Radio / Radio preparation
+ Special colour
+ weycor hydraulic fluid (environment-friendly)
+ Compaction measurement (digital display)
+ Compaction measurement with documentation function
+ Preparation for compaction measurement
+ Swivable driver's seat
+ ECO-Mode
+ LED working lights
+ HD-Drive for more gradeability
+ Pad-foot drum
+ Engine variants

Operating data AW 1110

Operating weight CECE	**11,700 kg***
Weight on front	**6,300 kg**
Weight on rear	**5,400 kg**
Compaction performance	
Linear drum load	**30.00 kg/cm**
Amplitude high / low	**1.8 / 0.8 mm**
Frequency I / II	**30 / 38 Hz**
Centrifugal force I / II	**220 / 150 kN**
Bandage	
Drum width	**2,100 mm**
Drum diameter	**1,500 mm**
Drum shell thickness	**25 mm**
Sound level	
Speed	**0 – 11.5 km/h**
Angular movement	**± 12°**
Gradeability with / without vibration	**43 % / 48 %**
Tyres	**23,1–26**
Engine-Model / Engine output	**see page 48**
Fuel capacity	**300 l**
Hydraulic oil capacity	**106 l**
Geräuschpegel	
Average acoustic power-level LWA(1)	**104.1 dB(A)**
Guaranteed acoustic power-level LWA(2)	**106.0 dB(A)**
Sound pressure level LPA(3)	**77.0 dB(A)**
Specific vibration-data Hand- / arm- / bodyvibration(4)	**< 2.5/0.5 m/s²**

Operating data AW 1110 PD

Operating weight CECE	**13,100 kg***
Weight on front	**7,700 kg**
Drum diameter	**1,390 mm**
Speed	**0 – 11.5 km/h**
Gradeability with / without vibration	**48 % / 52 %**
Tyres	**23,1–26 TR**

(1) According to 2000/14/EG & appendixes. (2) According to 2000/14/EG & appendixes.
(3) According to ISO 6396. (4) According to ISO 8041. *Depending on the engine variant.

Technical data AW 1110 / AW 1110 PD

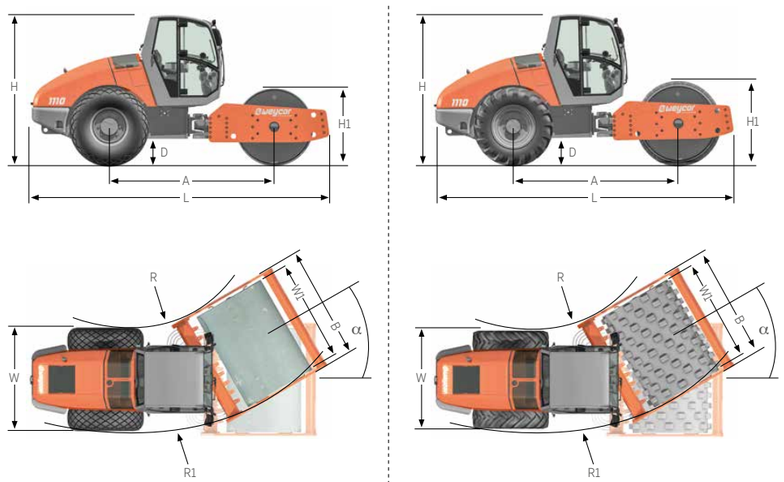

AW 1110 | AW 1110 PD

Distance between axles (A)	**3,195 mm**
Width (B)	**2,270 mm**
Road clearance (D)	**490 mm**
Height (H)	
- AW 1110 (H)	**2.920 mm**
- AW 1110 PD (H)	**2.920 mm**
Drum diameter	
- AW 1110 (H1)	**1,500 mm**
- AW 1110 PD (H1)	**1,390 mm**
Length (L)	**5,757 mm**
Turning radius	
- inside (R)	**4,860 mm**
- outside (R1)	**7,015 mm**
Width about tyres (W)	**2,090 mm**
Drum width (W1)	**2,100 mm**
Steering angle (α)	**±30°**

https://truckmanualshub.com/

AW 1120

Standard equipment

- ROPS-Cabin with tinted glass, 1 door left and 1 window right, both lockable on 180°
- Maintenance-free centre-pivot steering
- Low-maintenance vibratory system with 2 amplitudes and 2 frequencies
- No-spin rear axle
- Four-stage hydrostatic drive and traction control with anti-slip at the drum
- Both drives equipped with spring-loaded brake
- Adjustable driver's seat with armrest, adjustable steering column
- Emergency switch
- 4 working headlights
- Hot water heating with 3-stage fresh-air fan

Optional

+ Sunshade Canopy with ROPS bar and waterproof seat
+ Air conditioning (for cabin version only)
+ Padfoot shell kit (3-part) for modification of a smooth drum
+ Spring steel scraper blade (for smooth drum only)
+ Vulcolan scraper blade (for smooth drum only)
+ Cyclone dust seperator
+ Battery main switch
+ Reverse gear alarm
+ Rotating light
+ Radio / Radio preparation
+ Special colour
+ weycor hydraulic fluid (environment-friendly)
+ Compaction measurement (digital display)
+ Compaction measurement with documentation function
+ Preparation for compaction measurement
+ Swivable driver's seat
+ ECO-Mode
+ LED working lights
+ HD-Drive for more gradeability
+ Pad-foot drum
+ Engine variants

Operating data AW 1120

Operating weight CECE	**12,300 kg***
Weight on front	**7,100 kg**
Weight on rear	**5,200 kg**
Compaction performance	
Linear drum load	**33.81 kg/cm**
Amplitude high / low	**1.8 / 0.6 mm**
Frequency I / II	**30 / 40 Hz**
Centrifugal force I / II	**240 / 140 kN**
Bandage	
Drum width	**2,100 mm**
Drum diameter	**1,500 mm**
Drum shell thickness	**30 mm**
Sound level	
Speed	**0 – 11.5 km/h**
Angular movement	**± 12°**
Gradeability with / without vibration	**45 % / 50 %**
Tyres	**23,1–26**
Engine-Model / Engine output	**see page 48**
Fuel capacity	**300 l**
Hydraulic oil capacity	**106 l**
Geräuschpegel	
Average acoustic power-level LWA(1)	**103.9 dB(A)**
Guaranteed acoustic power-level LWA(2)	**106.0 dB(A)**
Sound pressure level LPA(3)	**78.0 dB(A)**
Specific vibration-data Hand- / arm- / bodyvibration(4)	**< 2.5/0.5 m/s²**

Operating data AW 1120 PD

Operating weight CECE	**13,700 kg***
Weight on front	**8,500 kg**
Drum diameter	**1,390 mm**
Speed	**0 – 11.5 km/h**
Gradeability with / without vibration	**48 % / 52 %**
Tyres	**23,1–26 TR**

(1) According to 2000/14/EG & appendixes. (2) According to 2000/14/EG & appendixes.
(3) According to ISO 6396. (4) According to ISO 8041. *Depending on the engine variant.

Technical data AW 1120 / AW 1120 PD

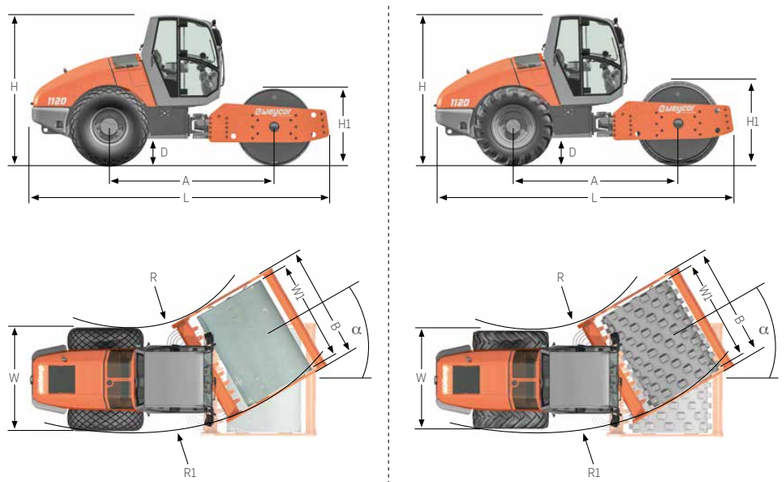

AW 1120 | AW 1120 PD

Distance between axles (A)	**3,195 mm**
Width (B)	**2,270 mm**
Road clearance (D)	**490 mm**
Height (H)	
- AW 1120 (H)	**2,920 mm**
- AW 1120 PD (H)	**2,920 mm**
Drum diameter	
- AW 1120 (H1)	**1,500 mm**
- AW 1120 PD (H1)	**1,390 mm**
Length (L)	**5,757 mm**
Turning radius	
- inside (R)	**4,860 mm**
- outside (R1)	**7,015 mm**
Width about tyres (W)	**2,090 mm**
Drum width (W1)	**2,100 mm**
Steering angle (α)	**±30°**

https://truckmanualshub.com/

AW 1130

Standard equipment

- ROPS-Cabin with tinted glass, 1 door left and 1 window right, both lockable on 180°
- Maintenance-free centre-pivot steering
- Low-maintenance vibratory system with 2 amplitudes and 2 frequencies
- No-spin rear axle
- Four-stage hydrostatic drive and traction control with anti-slip at the drum
- Both drives equipped with spring-loaded brake
- Adjustable driver's seat with armrest, adjustable steering column
- Emergency switch
- 4 working headlights
- Hot water heating with 3-stage fresh-air fan

Optional

+ Sunshade Canopy with ROPS bar and waterproof seat
+ Air conditioning (for cabin version only)
+ Padfoot shell kit (3-part) for modification of a smooth drum
+ Spring steel scraper blade (for smooth drum only)
+ Vulcolan scraper blade (for smooth drum only)
+ Cyclone dust seperator
+ Battery main switch
+ Reverse gear alarm
+ Rotating light
+ Radio / Radio preparation
+ Special colour
+ weycor hydraulic fluid (environment-friendly)
+ Compaction measurement (digital display)
+ Compaction measurement with documentation function
+ Preparation for compaction measurement
+ Swivable driver's seat
+ ECO-Mode
+ LED working lights
+ HD-Drive for more gradeability
+ Pad-foot drum
+ Engine variants

Operating data AW 1130

Operating weight CECE	**12,900 kg***
Weight on front	**7,200 kg**
Weight on rear	**5,700 kg**
Compaction performance	
Linear drum load	**34.29 kg/cm**
Amplitude high / low	**1.8 / 0.9 mm**
Frequency I / II	**30 / 38 Hz**
Centrifugal force I / II	**260 / 190 kN**
Bandage	
Drum width	**2,100 mm**
Drum diameter	**1,500 mm**
Drum shell thickness	**30 mm**
Sound level	
Speed	**0 – 12.5 km/h**
Angular movement	**± 12°**
Gradeability with / without vibration	**41 % / 46 %**
Tyres	**23,1–26**
Engine-Model / Engine output	**see page 48**
Fuel capacity	**300 l**
Hydraulic oil capacity	**106 l**
Geräuschpegel	
Average acoustic power-level LWA(1)	**103.9 dB(A)**
Guaranteed acoustic power-level LWA(2)	**106.0 dB(A)**
Sound pressure level LPA(3)	**76.0 dB(A)**
Specific vibration-data Hand- / arm- / bodyvibration(4)	**< 2.5/0.5 m/s²**

Operating data AW 1130 PD

Operating weight CECE	**14,300 kg***
Weight on front	**8,600 kg**
Drum diameter	**1,390 mm**
Speed	**0 – 12.5 km/h**
Gradeability with / without vibration	**48 % / 52 %**
Tyres	**23,1–26 TR**

(1) According to 2000/14/EG & appendixes. (2) According to 2000/14/EG & appendixes.
(3) According to ISO 6396. (4) According to ISO 8041. *Depending on the engine variant.

Technical data AW 1130 / AW 1130 PD

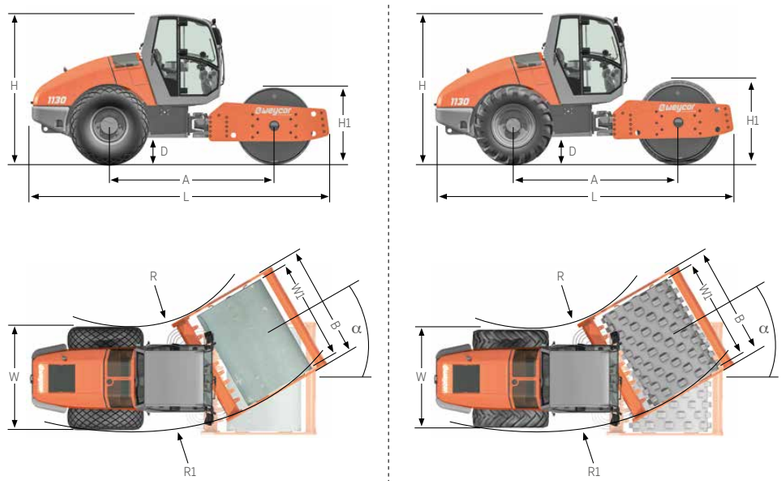

AW 1130 | AW 1130 PD

Distance between axles (A)	**3,195 mm**
Width (B)	**2,270 mm**
Road clearance (D)	**490 mm**
Height (H)	
- AW 1130 (H)	**2,920 mm**
- AW 1130 PD (H)	**2,920 mm**
Drum diameter	
- AW 1130 (H1)	**1,500 mm**
- AW 1130 PD (H1)	**1,390 mm**
Length (L)	**5,757 mm**
Turning radius	
- inside (R)	**4,860 mm**
- outside (R1)	**7,015 mm**
Width about tyres (W)	**2,090 mm**
Drum width (W1)	**2,100 mm**
Steering angle (α)	**±30°**

https://truckmanualshub.com/

AW 1140

Standard equipment

- ROPS-Cabin with tinted glass, 1 door left and 1 window right, both lockable on 180°
- Maintenance-free centre-pivot steering
- Low-maintenance vibratory system with 2 amplitudes and 2 frequencies
- No-spin rear axle
- Four-stage hydrostatic drive and traction control with anti-slip at the drum
- Both drives equipped with spring-loaded brake
- Adjustable driver's seat with armrest, adjustable steering column
- Emergency switch
- 4 working headlights
- Hot water heating with 3-stage fresh-air fan

Optional

+ Sunshade Canopy with ROPS bar and waterproof seat
+ Air conditioning (for cabin version only)
+ Padfoot shell kit (3-part) for modification of a smooth drum
+ Spring steel scraper blade (for smooth drum only)
+ Vulcolan scraper blade (for smooth drum only)
+ Cyclone dust seperator
+ Battery main switch
+ Reverse gear alarm
+ Rotating light
+ Radio / Radio preparation
+ Special colour
+ weycor hydraulic fluid (environment-friendly)
+ Compaction measurement (digital display)
+ Compaction measurement with documentation function
+ Preparation for compaction measurement
+ Swivable driver's seat
+ ECO-Mode
+ LED working lights
+ HD-Drive for more gradeability
+ Pad-foot drum
+ Engine variants

Operating data AW 1140

Operating weight CECE	**14,000 kg***
Weight on front	**8,100 kg**
Weight on rear	**5,900 kg**
Compaction performance	
Linear drum load	**38.57 kg/cm**
Amplitude high / low	**1.9 / 0.7 mm**
Frequency I / II	**30 / 40 Hz**
Centrifugal force I / II	**280 / 180 kN**
Bandage	
Drum width	**2,100 mm**
Drum diameter	**1,500 mm**
Drum shell thickness	**30 mm**
Sound level	
Speed	**0 – 12.5 km/h**
Angular movement	**± 12°**
Gradeability with / without vibration	**40 % / 45 %**
Tyres	**23,1–26**
Engine-Model / Engine output	**see page 48**
Fuel capacity	**300 l**
Hydraulic oil capacity	**106 l**
Geräuschpegel	
Average acoustic power-level LWA(1)	**104.8 dB(A)**
Guaranteed acoustic power-level LWA(2)	**106.0 dB(A)**
Sound pressure level LPA(3)	**76.0 dB(A)**
Specific vibration-data Hand- / arm- / bodyvibration(4)	**< 2.5/0.5 m/s²**

Operating data AW 1140 PD

Operating weight CECE	**15,400 kg***
Weight on front	**9,500 kg**
Drum diameter	**1,390 mm**
Speed	**0 – 12.5 km/h**
Gradeability with / without vibration	**48 % / 52 %**
Tyres	**23,1–26 TR**

(1) According to 2000/14/EG & appendixes. (2) According to 2000/14/EG & appendixes.
(3) According to ISO 6396. (4) According to ISO 8041. *Depending on the engine variant.

Technical data AW 1140 / AW 1140 PD

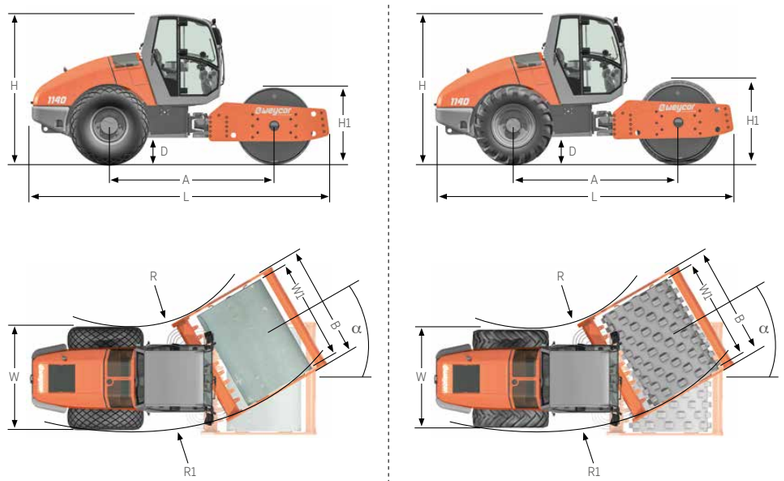

AW 1140 | AW 1140 PD

Distance between axles (A)	**3,195 mm**
Width (B)	**2,270 mm**
Road clearance (D)	**490 mm**
Height (H)	
- AW 1140 (H)	**2,920 mm**
- AW 1140 PD (H)	**2,920 mm**
Drum diameter	
- AW 1140 (H1)	**1,500 mm**
- AW 1140 PD (H1)	**1,390 mm**
Length (L)	**5,757 mm**
Turning radius	
- inside (R)	**4,860 mm**
- outside (R1)	**7,015 mm**
Width about tyres (W)	**2,090 mm**
Drum width (W1)	**2,100 mm**
Steering angle (α)	**±30°**

https://truckmanualshub.com/

ENGINE AND DRUM VARIANTS

Model	Emission	Engine	Emission System
7-Ton-Class			
AW 1070	Tier 2	Perkins 1104C-44 / 62 kW (83.1 HP)	-
AW 1070	Tier 3	Perkins 1104D-44T / 62 kW (83.1 HP)	-
AW 1070	Tier 3	Perkins 1104D-44T / 70 kW (93.9 HP)	-
AW 1070	EU STAGE 3B	Deutz TD 2.9 L4 / 54 kW (72.4 HP)	DOC
AW 1070	EU STAGE 5	Deutz TD 2.9 L4 / 54 kW (72.4 HP)	DOC + DPF
8-Ton-Class			
AW 1080	Tier 3	Perkins 1104D-44T / 62 kW (83.1 HP)	-
AW 1080	Tier 3	Perkins 1104D-44T / 70 kW (93.9 HP)	-
11-Ton-Class			
AW 1110	Tier 2	Deutz BF4M 2012 C / 95 kW (127.4 HP)	-
AW 1110	Tier 3	Deutz TCD 2012 L4 / 103 kW (138.1 HP)	-
AW 1110	EU STAGE 4	Cummins QSF 3.8 / 97 KW (130 HP)	DOC + SCR
12-Ton-Class			
AW 1120	Tier 2	Deutz BF4M 2012 C / 95 kW (127.4 HP)	-
AW 1120	Tier 3	Deutz TCD 2012 L4 / 103 kW (138.1 HP)	-
AW 1120	EU STAGE 4	Cummins QSF 3.8 / 97 KW (130 HP)	DOC + SCR
13-Ton-Class			
AW 1130	Tier 2	Deutz BF4M 2012 C / 100 kW (134.1 HP)	-
AW 1130	Tier 3	Deutz TCD 2012 L4 / 103 kW (138.1 HP)	-
AW 1130	EU STAGE 4	Cummins QSF 3.8 / 97 KW (130 HP)	DOC + SCR
14-Ton-Class			
AW 1140	Tier 2	Deutz BF4M 2012 C / 100 kW (134.1 HP)	-
AW 1140	Tier 3	Deutz TCD 2012 L4 / 103 kW (138.1 HP)	-
AW 1140	EU STAGE 4	Cummins QSF 3.8 / 97 KW (130 HP)	DOC + SCR

weycor compaction rollers vouch for technical excellence, for powerful and reliable machines and for quality "Made in Germany". In their respective domain, they exceed the currently applicable emission standards. According to the emission regulations of different countries, you have the choice to select the right engine type for your purpose.

Model	Smooth drum	Pad-foot drum	Pad-foot shell kit
7-Ton-Class			
AW 1070	●	●	●
AW 1070	●	●	●
AW 1070	●	●	●
AW 1070	●	●	●
AW 1070	●	●	●
8-Ton-Class			
AW 1080	●	●	●
AW 1080	●	●	●
11-Ton-Class			
AW 1110	●	●	●
AW 1110	●	●	●
AW 1110	●	●	●
12-Ton-Class			
AW 1120	●	●	●
AW 1120	●	●	●
AW 1120	●	●	●
13-Ton-Class			
AW 1130	●	●	●
AW 1130	●	●	●
AW 1130	●	●	●
14-Ton-Class			
AW 1140	●	●	●
AW 1140	●	●	●
AW 1140	●	●	●

https://truckmanualshub.com/

en_gb_01_2021_006

You can find our current product range and more exciting details at: **www.weycor.de**

Under our policy of continuous improvement, we reserve the right to change specifications and design without prior notice, errors expected. The technical data refer only to the standard version, illustrations do not necessarily show the standard version of the machine. Not all products are available in all markets.

weycor is a brand of ATLAS WEYHAUSEN GMBH.

ATLAS WEYHAUSEN GMBH · D - 27793 Wildeshausen
Phone +49 (0) 44 31 - 98 10 · info@weycor.de · **www.weycor.de**

weycor BY ATLAS WEYHAUSEN