https://truckmanualshub.com/

H4 SERIES

HMK 145 LCSR

HIDROMEK

https://truckmanualshub.com/

https://truckmanualshub.com/

New H4 Series

Innovation coming from experience

Being produced with developed hydraulic system design, HİDROMEK's new H4 Series excavators offer an outstanding performance by working faster, more productively and more efficiently.

HİDROMEK's new HMK 145 LCSR which belongs to H4 Series produces more work with less fuel; hence, provides maximum efficiency and productivity for its user.

H4 SERIES

https://truckmanualshub.com/

Performance.....6-7
Durability.....8-11
Safety.....12-13
Technology.....14-15
Comfort.....16-17
HİDROMEK Smartlink - Ease of Service.....18-19
Technical Features 20-25

The information and images, and equipment presented in this brochure are either standard or optional depending on the configuration.
HİDROMEK has the right to modify the specifications and the designs of the model indicated in this brochure without prior notice.

https://truckmanualshub.com/

https://truckmanualshub.com/

HMK 145 LCSR

Dynamic!

Ensures superior performance in all fields and conditions with its excellent maneuverability and easy usage provided through its high performance engine, quickness and short swing radius.

Innovative!

Provides top level operator safety and comfort with its technological equipment and electronic system.

Compact!

Due to its compact structure, it offers powerful and precise operation for its users especially in urban areas, narrow spaces and in different working fields such as construction, landscaping, material flooring and leveling.

https://trucknanualshub.com/

https://truckmanualshub.com/

https://truckmanualshub.com/

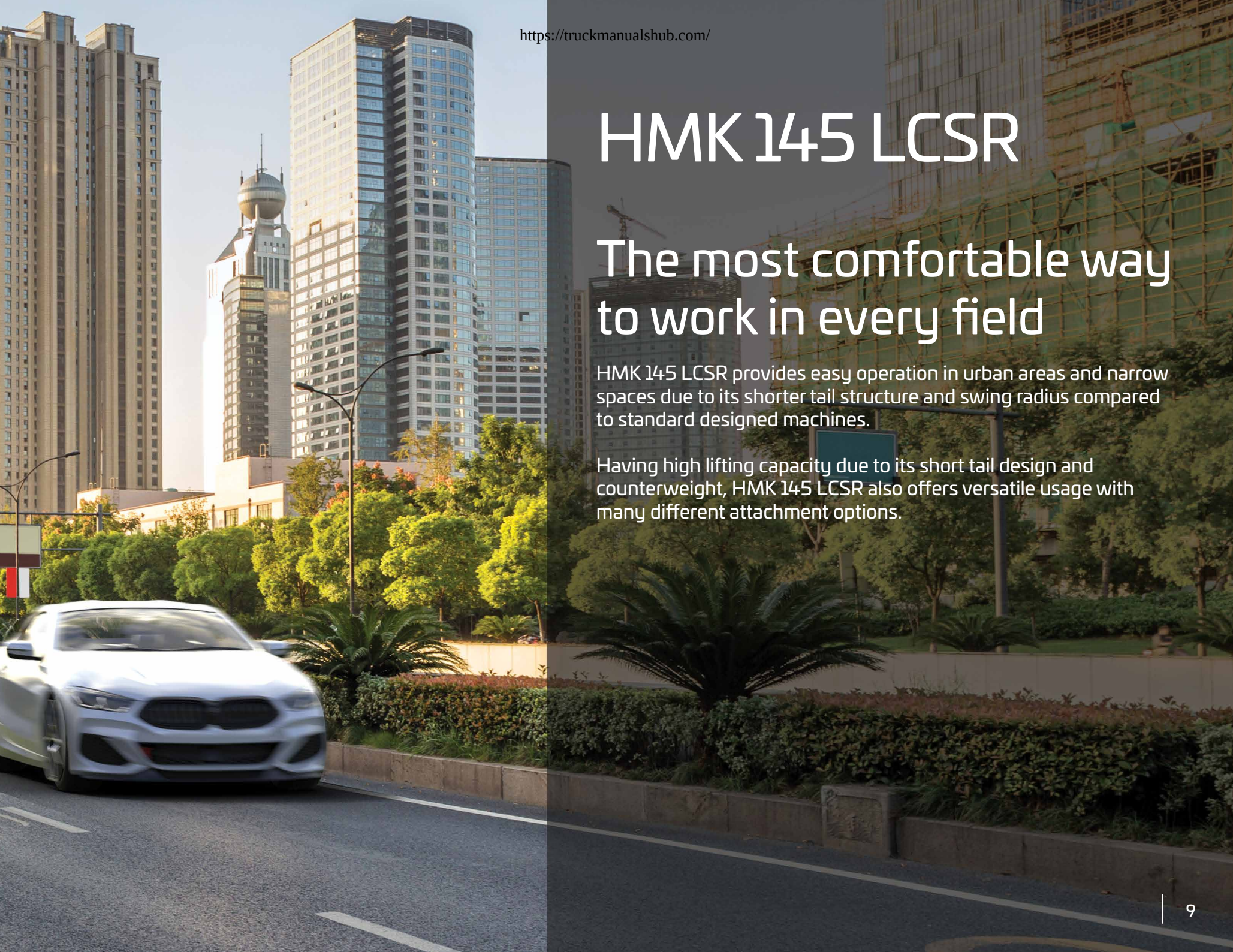

HMK 145 LCSR

The most comfortable way to work in every field

HMK 145 LCSR provides easy operation in urban areas and narrow spaces due to its shorter tail structure and swing radius compared to standard designed machines.

Having high lifting capacity due to its short tail design and counterweight, HMK 145 LCSR also offers versatile usage with many different attachment options.

https://truckmanualshub.com/

Reinforced heavy duty construction

With their reinforced heavy duty construction produced at HİDROMEK's modern production facilities and going through sensitive quality-control processes, H4 Series excavators have excellent durability.

① More durable anti-wearing plates (Hardox 450 HB)

② Optimized bucket form

③ Reinforced arm supporting parts

④ Reinforced casting tip

⑤ Heavy duty arm

⑥ Reinforced boom structure

⑦ Reinforced boom cylinder cast bearing

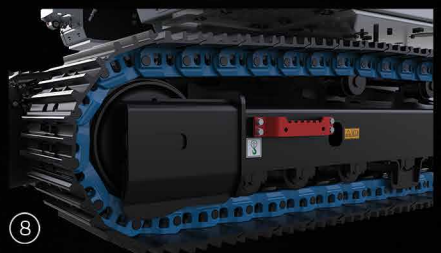

⑧ Reinforced lowerframe and undercarriage components

7
6
3
8
2
HIDROMEK
H4
HMK145LCSR

Safeworkingenvironment

ROPS&FOPS cabin

Having the standards of ROPS (Roll Over Protective Structure) & FOPS (Falling Object Protective Structure), H4 Series excavators provide maximum safety and durability.

Wide vision capacity

Designed with giving special importance to occupational safety, H4 Series ensure excellent vision by minimizing the blind spot on the side and rear cameras. Along with the increase in the number of led headlights, the night vision is significantly improved on H4 Series excavators; in addition, there are also red handles and warning labels providing maximum safety for the operator.

Audio warning systems

H4 Series excavators enable safer working environment with their automatic starting horn, swing warning system and travel warning system.

SAFETY
SHOWER

Shaped with technology

Electronic system of H4 Series excavators designed to protect the engine and hydraulic components to provide fuel saving and superior performance.

Automatic stop system

In the new series, automatic stop system through configurable idling and stopping times provides fuel saving by stopping the engine after the machine is on idle. Automatic stop system in H4 Series helps to decrease the operational costs to minimum, and contributes to saving the environment.

Safe fuel transfer pump

"Safe fuel transfer pump" added to H4 Series stops the pump automatically when the tank is full and this feature gets activated also when the pump does not transfer fuel for 30 seconds, and ensures that the pump stops automatically.

Power boost technology

In H4 Series, power boost technology gets activated automatically in the conditions when the machine needs extra power, and ensures that the machine has the proper performance for the work.

8" Touch control panel

8 inch touch control panel is positioned ergonomically at a point that the operator can easily reach it. Touch control panel having high quality hardware and a large screen easily enables to control the machine features and access to machine information.

The features of touch control panel:

- It offers multi-language option
- Music system is integrated into 8 "touch control panel.
- It allows the operator to adjust the flow required for the attachment without leaving the cab and save this information for 20 different attachments.
- Selection of double or single acting line can also be done over the user panel.
- During travel, rear and side view cameras with improved image quality and activated automatically can be controlled.
- Information on the average and instant fuel consumption can be obtained.
- Information on status such as atmospheric pressure, turbo boost pressure, fuel pressure and hydraulic pump pressure can be obtained.
- User can acquire working hour information such as work, attachment and travel.
- Maintenance registries can be obtained, and the user is warned when the maintenance time approaches.
- Failure codes and registries can be obtained.
- Audio warning systems can be controlled.

https://truckmanualshub.com/

OPERA, the guide of the field

H4 Series excavators are equipped with Opera (HİDROMEK Operator Interface) for the operator to use the machine easily, and feel comfortable and relaxed as he is in an office environment.

Functions to be controlled by means of Opera

- Engine RPM control
- Access to control panel menu
- Functions of lights, windshield wipers and rear view camera
- Music system control
- Auto stop control of the engine to ensure maximum fuel economy during low idle
- On H4 Series machines, the preheating system available to protect the engine and hydraulic systems can be controlled via Opera.

The aesthetic design of power

The seat ergonomic, heated, air suspended and having 35 degrees adjustable backrest angle is provided in H4 Series, and it enables the operator to work comfortably and without getting tired for long working hours.

H4 Series which has many features* such as proportional control pedals and joysticks, throttle control dial, operator touch screen, interior light, cup holder and heating-cooling box give more importance to user comfort.

* Other features for user comfort on H4 Series machines can be found on page 21.

https://truckmanualshub.com/

Office comfort in construction equipment

Automatic air conditioning system

Air vents and air conditioning system which can automatically adjust itself according to the ambient heat located in the redesigned cabin provide the best cooling performance in its class by 30%.

Wide angle view

On the new series machines, the new two-piece windshield wiper system designed for creating more comfortable work environment provides a wide angle view which increases the work efficiency of the user.

Led headlights for night vision

Led headlights on new H4 Series machines improve the night vision, and enable the operator to work more safely and comfortably.

Dampers

By using 6 silicone dampers on H4 Series excavators, noise, shock and vibration are absorbed and prevented from being transmitted to the cabin under any working condition.

https://truckmanualshub.com/

You have the control with HİDROMEK SmartLink

Telematic system HİDROMEK Smartlink allows the user to easily access to machine location and technical information via computer and mobile phone.

Follow the work time and location of your machine through HİDROMEK Smartlink!
Through GPS tracking system, it is possible to track the location and the work time intervals of the machine.

Analyze your fuel consumption through HİDROMEK Smartlink!
It is possible to analyze fuel consumption according to the working conditions of the machine and daily fuel parameters.

Check the works for which your machine has been used through HİDROMEK Smartlink!
Through working mode information, it is possible to see the daily and total working hours of the machine for excavation and leveling and with crusher or with other optional attachments besides the power mode information and the speed ranges.

Follow your machine's maintenance through HİDROMEK Smartlink!
Under the Alerts list, the machine's upcoming maintenance can be checked while the information of the nearest authorized service can be obtained, and it can be contacted.

Contact the nearest authorized service or regional service through HİDROMEK Smartlink!
With the application, it is possible to obtain the information on Regional and Authorized Services of HİDROMEK After Sales Services as well as the directions to them.

Have performance reports for the selected periods of time for your machines through HİDROMEK Smartlink!
For any selected periods of time, it is possible to have a report on daily fuel consumption, average fuel consumption, power and working modes, daily work time intervals and locations.

To download Smartlink application

https://truckmanualshub.com/

Easy maintenance and fast service for H4 Series through safe and easy access

H4 Series excavators, designed considering fast access to hydraulic and engine equipment, provide easy maintenance and service. Most of the maintenance can be easily carried out without getting on the machine, which shortens the service time and increases machine work time.

Automatic greasing system ensures that all parts of the machine can be lubricated from one single center.

https://truckmanualshub.com/

ENGINE

Brand & Model		ISUZU AR-4JJ1XASW-2
Type		Water cooled, 4 cycles, 4 cylinders, inline, diesel engine with direct injection, turbocharger and intercooler
Power	Gross	105 HP (78,5 kW) @2000 rpm / SAE J1995
	Net	102 HP (76,4 kW) @2000 rpm / SAE J1349
Maximum Torque	Gross	375 Nm @1600 rpm
	Net	362 Nm @1600 rpm
Displacement		2999 cc
Bore x Stroke		95,4 mm x 104,9 mm
Emission Class		U.S. EPA Tier 4 and EU Stage IV

HYDRAULIC SYSTEM

MAIN PUMP	
Type	2 axial piston pumps with variable displacement and swashplate
Max. Flow Rate	2 x 129 L/min
Pilot Pump	Gear type 20 L/min (10 cc/dev)
WORKING PRESSURE	
Attachment	320 kgf/cm²
Power Boost	350 kgf/cm²
Travel	350 kgf/cm²
Swing	260 kgf/cm²
Pilot	40 kgf/cm²
HYDRAULIC CYLINDERS	
Boom	2 x ø110x ø75x 1080 mm
Arm	1 x ø115x ø80x 1225 mm
Bucket	1x ø100x ø70x 910 mm

SWING SYSTEM

Swing motor	Fixed swashplate piston motor integrated with super shock absorber valve
Reduction	2 stage, planetary gear type
Swing Brake	Hydraulic disc type, pilot operated and automatically released
Swing Speed	11,3 rpm

LOWER FRAME

Shoe	Triple grouser - 500 mm
No. of Shoes	2 x 46 pieces
No. of Lower Rollers	2 x 7 pieces
No. of Upper Rollers	2 x 2 pieces
Track Tensioner	Hydraulic type with spring cushioning

ELECTRICAL SYSTEM

Voltage	24 V
Battery	2 x 12 V / 100 Ah
Alternator	24 V / 50 A
Starter Motor	24 V / 4 kW

TRAVEL AND BRAKES

Travel		Fully hydrostatic
Travel Motor		Axial piston motor with 2 speed stages and swashplate
Reduction		2 stage, planetary gear type
Travel Speed	High Speed	5,7 km/h
	Low Speed	3,4 km/h
Max. Traction		11,230 kgf
Gradeability		35° (%70)
Parking Brake		Hydraulic disc type, pilot operated and automatically released
Ground Pressure (With 500 mm Shoe)		0,48 kgf/cm²

FILLING CAPACITIES

Fuel Tank	235 L	Engine Cooling System	21 L
Hydraulic Tank	115 L	Engine Oil	16 L
Hydraulic System	205 L		

OPERATING WEIGHT (kg)

	Mono Boom	Two Pieces Boom
HMK 145 LCSR	16.850	17.150

https://truckmanualshub.com/

EQUIPMENT HMK 145 LCSR

Engine	Standard	Optional
Water cooled diesel engine with turbocharger and intercooler	●	
Engine pre-heat function	●	
Automatic idling	●	
One touch auto-idle system	●	
Automatic stop function	●	
Two-stage air filter	●	
Air filter clogged indicator	●	
Low engine pressure warning system	●	
Overheat warning system	●	
Adjustable power modes	●	
High altitude working function	●	
Electronical engine control	●	

Hydraulic System		
Boom and arm regenaration valve	●	
Automatic power boost	●	
Smooth boom feature		O
Main hydraulic filter	●	
Backup ports (valve)	●	
Cylinder cushioning and contamination seals	●	
Single-acting hydraulic line, breaker		O
Double- acting hydraulic line, crusher		O
Additional line		O
Quick coupling line		O
Attachment settings through instrument panel		O

OPERATOR'S CAB		
Pressurized and sound isolated cabin	●	
Air-conditioning	●	
Air-suspension seat	●	
Heated seat		O
Operator touch screen	●	
Opera control system	●	
Throttle control dial	●	
Automatic travel speed (low / high)	●	
4 different working modes	●	
Sliding windscreen and removable lower windscreen	●	
Openable left door window	●	
Upper and lower windshield wiper	●	
Joysticks and pedals	●	
Travel pedals and control levers	●	
Proportional controlled pedals and joysticks		O
Electric horn	●	
Cigarette lighter	●	
Intrerior light	●	
Cup-holder	●	
Convenient storage	●	
Convenient storage (for equipment)	●	
Heating & Cooling box	●	
Easy-cleaned floor	●	
12V power socket	●	
Computer connection port	●	
Radio / mp3 / usb / Aux	●	

Lower Frame	Standard	Optional
Narrow Lower Chassis		O
Track width options 600/700 mm		O
Lubricated and sealed track components	●	
Dozer blade		O
Mooring points for shipment	●	

Safety		
ROPS (Roll Over Protective Structure)	●	
FOPS (Falling Object Protective Structure)	●	
Rear view camera	●	
Side view camera		O
Right and left rear view mirrors	●	
Working lamps	●	
LED working lamps		O
Rotating beacon		O
Swing and travel alarm		O
Emergency engine stop switch	●	
Pilot operated and automatically released swing brake	●	
Boom and arm cylinder safety valve		O
Overload warning system		O
Battery cut-off switch	●	
Handrails by the steps and on the upper frame	●	
Perforated metal non-slip plates	●	
Safety locking device	●	
Safety glass	●	
Emergency hammer	●	
Lockable fuel tank cover	●	
Upper and lower guards for windshield		O
Operator's cab ceiling guard		O

Miscellaneous		
Telematic system (HİDROMEK Smartlink)		O
GEO System		O
Fuel transfer pump with automatic stop	●	
Water sensor on fuel pre-filter	●	
Bio oil B7	●	
Alternator - Battery	●	
Battery Charge Indicator	●	
Automatic lubrication system		O
Working lamp guards		O
Hydraulic breaker return line filter		O
Double pump combination function		O
Choosing single or double acting attachment on the instrument panel		O
Choosing the control method for the optional attachment		O
Bucket cylinder rod guard		O
Warning horn	●	
Counterweights		O
Boom cylinder piping guard		O

● **STANDARD** O **OPTIONAL**

https://truckmanualshub.com/

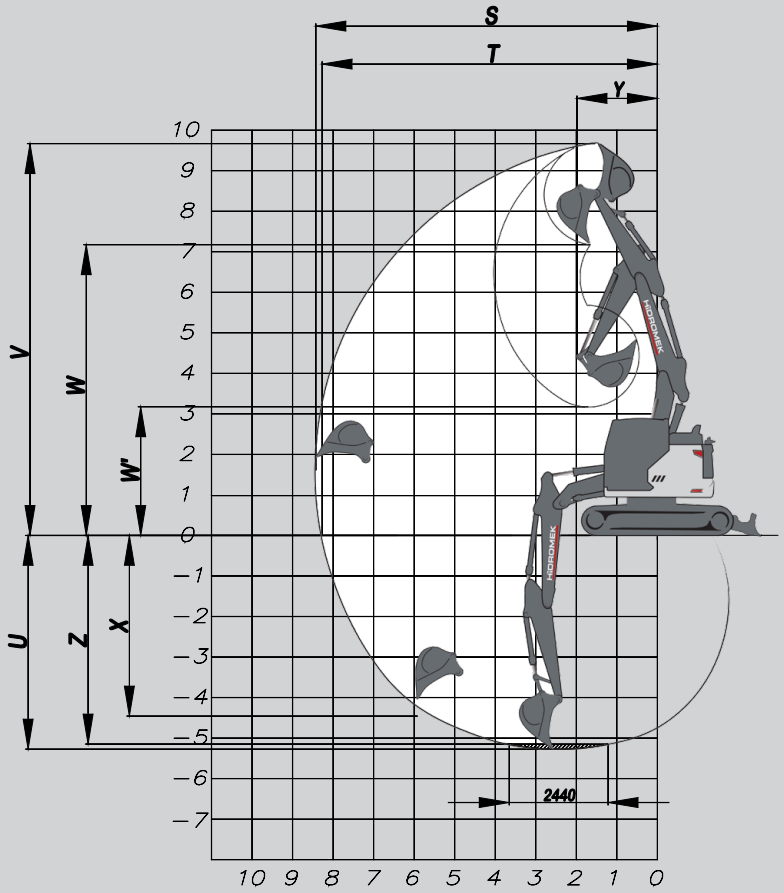

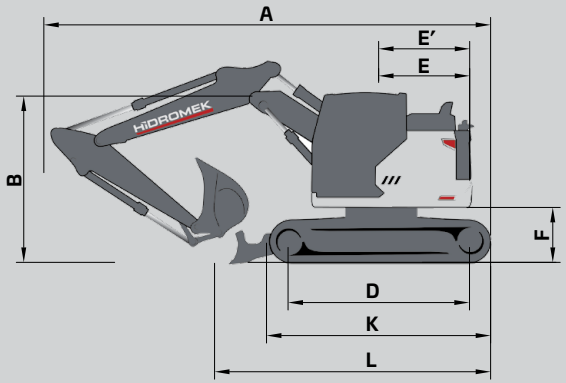

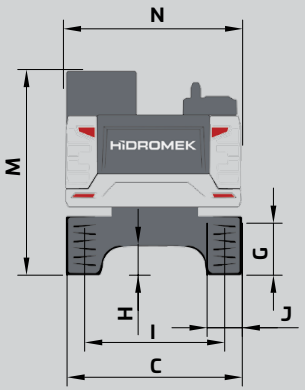

DIMENSIONS

			Mono Boom			Two Pieces Boom		
		BOOM (m)	*4,60	4,60	4,60	*4,80	4,80	4,80
		ARM (m)	*2,30	2,60	2,90	*2,30	2,60	2,90
GENERAL DIMENSIONS (mm)	A)	Overall Length	7.520	7.520	7.510	7.720	7.690	7.650
	B)	Overall height (to top of boom)	2.840	2.960	3.030	2.810	2.940	3.030
	C)	Overall Width	2.510	2.510	2.510	2.510	2.510	2.510
	D)	Distance between tumblers	3.035	3.035	3.035	3.035	3.035	3.035
	E)	Distance from center of swing to rear end	1.500	1.500	1.500	1.500	1.500	1.500
	E´)	Tail swing radius	1.520	1.520	1.520	1.520	1.520	1.520
	F)	Counterweight Clearance	940	940	940	940	940	940
	G)	Track Height	830	830	830	830	830	830
	H)	Ground Clearance	430	430	430	430	430	430
	I)	Track Gauge	1.990	1.990	1.990	1.990	1.990	1.990
	J)	Shoe Width	500	500	500	500	500	500
	K)	Track Length	3.780	3.780	3.780	3.780	3.780	3.780
	L)	Length on ground (transport)	4.620	4.460	4.220	5.040	4.910	4.710
	M)	Overall height of cab	2.960	2.960	2.960	2.960	2.960	2.960
	N)	Overall width of upperstructure	2.500	2.500	2.500	2.500	2.500	2.500
WORKING RANGES (mm)	S)	Maximum Digging Reach	8.210	8.510	8.790	8.470	8.770	9.060
	T)	Maximum Digging Reach on Ground Level	8.050	8.360	8.640	8.320	8.630	8.920
	U)	Maximum Digging Depth	5.360	5.660	5.960	5.320	5.620	5.920
	V)	Maximum Digging Height	9.270	9.550	9.790	9.710	10.010	10.270
	W)	Maximum Dumping Height	6.690	6.960	7.200	7.120	7.420	7.680
	W')	Minimum Dumping Height	2.720	2.450	2.140	3.120	2.870	2.580
	X)	Maximum Vertical Digging Depth	4.850	5.180	5.470	4.580	4.920	5.210
	Y)	Minimum Swing Radius	1.990	2.120	2.160	1.990	2.160	2.250
	Z)	Maximum Digging Depth (2440 mm level)	5.130	5.450	5.770	5.190	5.500	5.810

* Standard

https://truckmanualshub.com/

FORCES

		Mono Boom			Two Pieces Boom		
	BOOM (m)	*4,60	4,60	4,60	*4,80	4,80	4,80
	ARM (m)	*2,30	2,60	2,90	*2,30	2,60	2,30
SAE	Bucket Digging Force	8.300	8.300	8.300	8.300	8.300	8.300
	Bucket Digging Force (Power Boost)	9.100	9.100	9.100	9.100	9.100	9.100
	Arm Crowd Force	6.600	6.100	5.600	6.600	6.100	5.600
	Arm Crowd Force (Power Boost)	7.300	6.700	6.100	7.300	6.700	6.100
ISO	Bucket Digging Force	9.600	9.600	9.600	9.600	9.600	9.600
	Bucket Digging Force (Power Boost)	10.500	10.500	10.500	10.500	10.500	10.500
	Arm Crowd Force	6.900	6.300	5.800	6.900	6.300	5.800
	Arm Crowd Force (Power Boost)	7.600	6.900	6.400	7.600	6.900	6.400

A- Material density less than 2.000 kg/m^3
B- Material density less than 1.800 kg/m^3
C- Material density less than 1.500 kg/m^3
D- Material density less than 1.200 kg/m^3

HEAVY DUTY

STANDARD BUCKET

	Width	1.000 mm	
	Capacity (SAE)	0,6 m^3	
	Weight	525 kg	
	Number of Teeth	4	
		*2P BOOM	4.6 BOOM
ARM	2,00 m	A	A
	*2,30 m	A	A
	2,60 m	A	A
	2,90 m	B	A

OPTIONAL BUCKET SELECTION SCHEME

	Width	600 mm		780 mm		890 mm		1.130 mm		1.200 mm
	Capacity (SAE)	0,35 m^3		0,45 m^3		0,50 m^3		0,70 m^3		0,75 m^3
	Weight	350 kg		450 kg		490 kg		560 kg		580 kg
	Number of Teeth	3		3		4		5		5
		2P BOOM	4.6 BOOM	2P BOOM	4.6 BOOM	2P BOOM	4.6 BOOM	2P BOOM	4.6 BOOM	2P BOOM	4.6 BOOM
ARM	2,00 m	A	A	A	A	A	A	A	A	B	A
	*2,30 m	A	A	A	A	A	A	B	A	C	B
	2,60 m	A	A	A	A	A	A	C	B	C	C
	2,90 m	A	A	A	A	B	A	C	C	D	C

* Standard

ATTACHMENTS

QUICK COUPLER

RIPPER

CLEANING BUCKET

https://truckmanualshub.com/

LIFTING CAPACITY (kg) — HMK 145 LCSR

	Boom: 4,6 m		**Arm:** 2,3 m		Without bucket		STD, 500 mm Crawler		**CW:** 3000 kg				: Front	: Side	
A, m	**1,5**		**3,0**		**4,5**		**6,0**		**7,5**		**9,0**		**Maximum Reach**		
B, m															**R, m**
7,5			*5250	*5250									*4450	*4450	3,34
6,0					*4350	3950							*3450	3050	5,24
4,5			*5350	*5350	*4600	3900	3850	2400					*3200	2250	6,24
3,0			*7850	6750	*5450	3650	3750	2350					3100	1900	6,76
1,5					5650	3350	3650	2200					2950	1800	6,91
0 (Ground)			*7000	5700	5400	3150	3550	2150					3000	1800	6,72
-1,5	*5900	*5900	*9400	5700	5350	3100	3500	2100					3400	2050	6,16
-3,0	*10750	*10750	*7300	5850	*5050	3200							*4100	2700	5,10

LIFTING CAPACITY (kg) — HMK 145 LCSR

	Boom: 4,6 m		**Arm:** 2,6 m		Without bucket		STD, 500 mm Crawler		**CW:** 3000 kg				: Front	: Side	
A, m	**1,5**		**3,0**		**4,5**		**6,0**		**7,5**		**9,0**		**Maximum Reach**		
B, m															**R, m**
7,5													*3650	*3650	3,95
6,0					*4000	*4000							*2950	2700	5,64
4,5			*4300	*4300	*4300	3900	3850	2450					*2700	2050	6,57
3,0			*7200	6950	*5150	3650	3750	2350					*2700	1800	7,07
1,5			*8250	6050	5650	3350	3650	2200					2750	1650	7,21
0 (Ground)			*7200	5700	5400	3150	3500	2100					2800	1700	7,03
-1,5	*5350	*5350	*9750	5650	5300	3050	3450	2050					3100	1850	6,50
-3,0	*9850	*9850	*7900	5750	5400	3100							*3950	2400	5,51

LIFTING CAPACITY (kg) — HMK 145 LCSR

	Boom: 4,6 m		**Arm:** 2,9 m		Without bucket		STD, 500 mm Crawler		**CW:** 3000 kg				: Front	: Side	
A, m	**1,5**		**3,0**		**4,5**		**6,0**		**7,5**		**9,0**		**Maximum Reach**		
B, m															**R, m**
7,5													*3000	*3000	4,45
6,0					*3650	*3650							*2500	2450	6,00
4,5					*4000	3950	*3800	2450					*2300	1900	6,88
3,0			*6550	*6550	*4850	3700	3800	2350					*2300	1650	7,36
1,5			*9400	6150	5700	3400	3650	2200					*2400	1550	7,49
0 (Ground)			*7650	5700	5400	3150	3500	2100					2600	1550	7,32
-1,5	*5000	*5000	*10000	5600	5300	3050	3450	2050					2900	1750	6,81
-3,0	*8800	*8800	*8400	5650	5300	3050							3600	2150	5,88
-4,5			*5050	*5050									*3250	*3250	4,22

https://truckmanualshub.com/

LIFTING CAPACITY (kg)															HMK 145 LCSR / 2P BOOM
	Boom: 4,8 m		**Arm:** 2,3 m		Without bucket		STD, 500 mm Crawler		**CW:** 3000 kg				: Front	: Side	
A, m	**1,5**		**3,0**		**4,5**		**6,0**		**7,5**		**9,0**		**Maximum Reach**		
B, m															**R, m**
7,5			*5800	*5800									*4450	*4450	3,87
6,0			*4850	*4850	*5200	4000							*3550	2700	5,59
4,5			*5100	*5100	*5700	3850	3850	2400					*3250	2050	6,53
3,0					5950	3550	3750	2300					2900	1750	7,03
1,5					5550	3250	3600	2150					2750	1650	7,17
0 (Ground)			*4750	*4750	5350	3050	3500	2050					2800	1700	6,99
-1,5			*6850	5600	5300	3000	3450	2050					*3000	1900	6,46
-3,0					*3150	3100									

LIFTING CAPACITY (kg)															HMK 145 LCSR / 2P BOOM
	Boom: 4,8 m		**Arm:** 2,6 m		Without bucket		STD, 500 mm Crawler		**CW:** 3000 kg				: Front	: Side	
A, m	**1,5**		**3,0**		**4,5**		**6,0**		**7,5**		**9,0**		**Maximum Reach**		
B, m															**R, m**
7,5			*5050	*5050									*3700	*3700	4,42
6,0					*4500	4050							*3000	2450	5,98
4,5			*4000	*4000	*4750	3900	3900	2400					*2800	1900	6,87
3,0			*9200	6800	6000	3600	3750	2300					*2700	1650	7,34
1,5					5600	3300	3600	2150					2550	1550	7,48
0 (Ground)			*5050	*5050	5350	3050	3500	2050					2600	1550	7,31
-1,5			*7500	5500	5250	3000	3450	2000					*2900	1700	6,79
-3,0			*4600	*4600	*3650	3050							*2000	*2000	5,85

LIFTING CAPACITY (kg)															HMK 145 LCSR / 2P BOOM
	Boom: 4,8 m		**Arm:** 2,9 m		Without bucket		STD, 500 mm Crawler		**CW:** 3000 kg				: Front	: Side	
A, m	**1,5**		**3,0**		**4,5**		**6,0**		**7,5**		**9,0**		**Maximum Reach**		
B, m															**R, m**
7,5					*3850	*3850							*3050	*3050	4,90
6,0					*3950	*3950	*3450	2450					*2550	2200	6,34
4,5			*3300	*3300	*4050	3950	3900	2450					*2350	1750	7,18
3,0			*8700	6950	*5900	3650	3750	2300	2600	1600			*2350	1550	7,63
1,5					5650	3300	3600	2150	2550	1550			*2400	1450	7,77
0 (Ground)			*5450	*5450	5350	3050	3450	2050	2500	1500			2450	1450	7,60
-1,5	*4000	*4000	*8100	5450	5250	2950	3400	2000					2700	1600	7,11
-3,0			*5400	*5400	*4100	3000	*2500	2050					*2100	1950	6,22

https://truckmanualshub.com/

HİDROMEK®

HEAD OFFICE

Address : Ahi Evran OSB Mahallesi,
Osmanlı Caddesi, No:1, 06935
Sincan-ANKARA/TURKEY
Phone : +90 312 267 12 60
Fax : +90 312 267 12 39
E-mail: export@hidromek.com.tr

AFTER SALES SERVICE

Address : İstanbul Yolu 17. Km,
Şehit Osman Avcı Mahallesi,
No: 479, Etimesgut-ANKARA/TURKEY
Phone : +90 312 280 87 40
Fax : +90 312 280 87 48

HİDROMEK® WEST

Address : C/De la Maquina 14, Poligono
Industrial El Regás, 08850
Gavá BARCELONA/ SPAIN
Phone : +34 93 638 84 65
Fax : +34 93 638 07 14
E-mail : info@hidromek.es

HİDROMEK® JAPAN

Address : 5-10, Hashimoto 6-chome,
Midori-Ku, Sagamihara,
Kanagawa, 252-0143 JAPAN
Phone : +81 42 703 0261
Fax : +81 42 703 0262

HİDROMEK® RUS

Address : 72, Zhivopisnaya str., Building A,
village Oktyabrskiy,
Krasnodar, 350032, RUSSIA
Phone : +7 861 290 3007
E-mail : info@hidromek.ru

HİDROMEK® HCE

HİDROMEK Construction Equipment (Thailand) Ltd.
Address : Amata City Chonburi Industrial Estate Phase 7,
No. 700/669 Moo 1, T.Phanthong,
A.Phanthong, Chonburi 20160, TAYLAND
Phone : +66 38 447 349
Fax : +66 38 447 355

https://truckmanualshub.com/

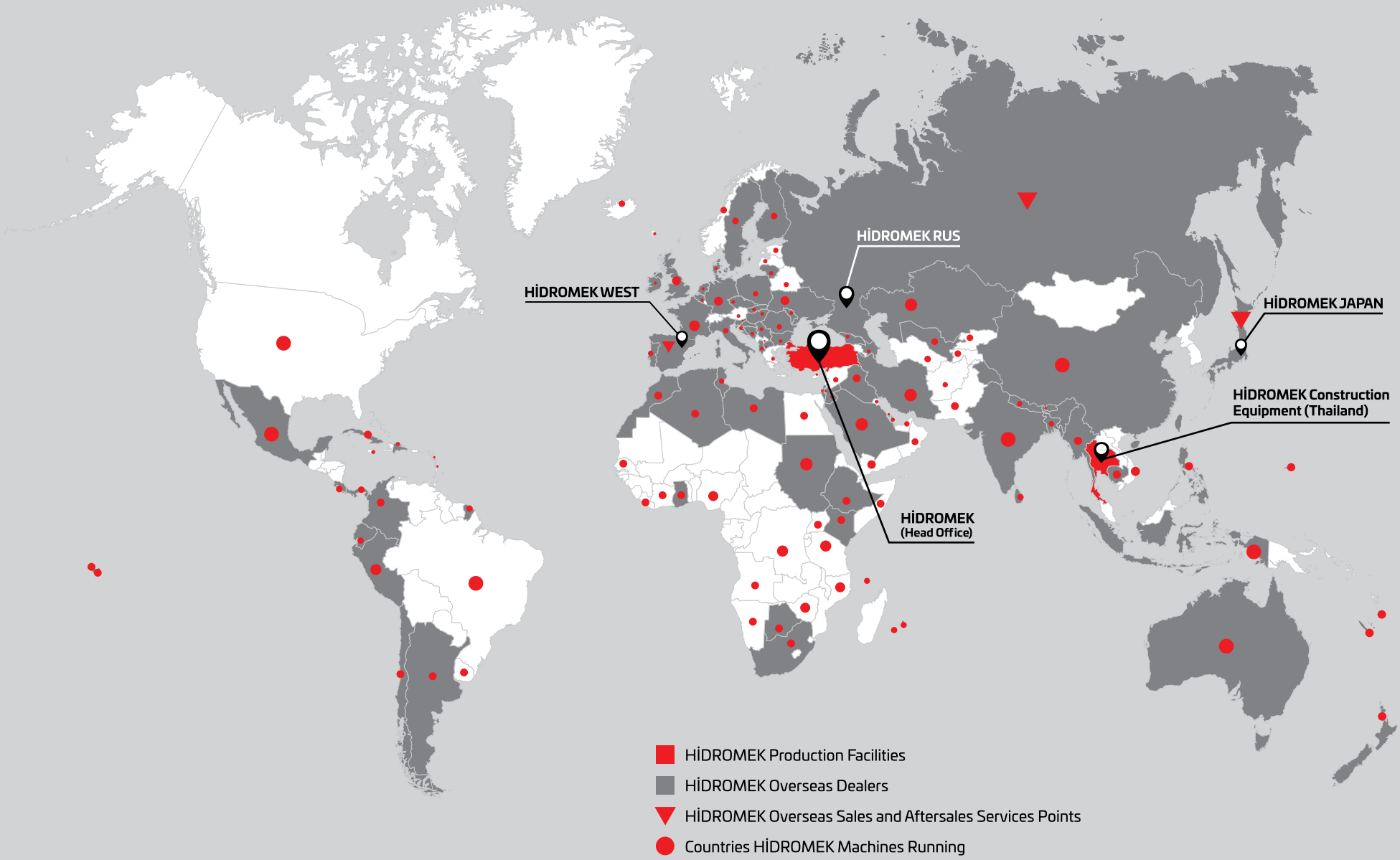

https://truckmanualshub.com/

HIDROMEK®

Together Stronger

www.hidromek.com

hidromek.tr Hidromek hidromekofficial HidromekTv company/hidromek

ENG - SEPTEMBER 2020 / 140920 -4F