https://truckmanualshub.com/

MANITOU AMERICAS, INC.
One Gehl Way
P. O. Box 179
West Bend, WI 53095-0179 U.S.A

Website: www.us.manitou.com

For parts orders contact your Manitou dealer or call:
Manitou Americas Parts Department. 262-334-6653
Fax (254) 867--6504

MLT625-75 H S1-E3

Operator Manual

Catalog No. 51900001
In. Rel. 03-2011

THIS OPERATOR'S MANUAL MUST BE KEPT IN THE LIFT TRUCK AND MUST BE READ AND UNDERSTOOD BY OPERATORS.

https://truckmanualshub.com/

https://truckmanualshub.com/

0 - ROUGH TERRAIN FORKLIFT TRUCK GENERAL SAFETY STANDARDS

1 - OPERATING & SAFETY INSTRUCTION

2 - DESCRIPTION

3 - MAINTENANCE

4 - ATTACHMENTS

5 - ELECTRICAL & HYDRAULIC SCHEMATIC

RELEASE: 03/11	Initial Release

THE TEXTS AND ILLUSTRATIONS IN THIS DOCUMENT MUST NOT BE REPRODUCED EITHER WHOLLY OR IN PART.

https://truckmanualshub.com/

https://truckmanualshub.com/

https://truckmanualshub.com/

https://truckmanualshub.com/

ROUGH TERRAIN FORKLIFT TRUCK GENERAL SAFETY STANDARDS

https://truckmanualshub.com/

https://truckmanualshub.com/

ROUGH TERRAIN FORKLIFT TRUCK GENERAL SAFETY STANDARDS

STUDY THE OPERATOR/SERVICE MANUALS

The information in this manual provides general instructions for the safe operation and maintenance of your forklift truck. This information is vital and must be clearly understood by the operator and serviceman. Study this manual and the Rough Terrain Forklift Safety Manual (part no. 422494) thoroughly and carefully before operating or servicing your forklift. Contact your dealer or Manitou North America, Inc. if you have any questions concerning your forklift, its operation, service or parts. Keep both manuals in the literature box on the forklift available for reference. If either manual becomes illegible or is missing, contact your dealer for replacements immediately. This manual cannot cover every situation that might result in an accident. It is the responsibility of the operator to always remain alert for potential hazards and be prepared to avoid them!

ADDITIONAL RECOMMENDED LITERATURE:

ANSI / ITSDF B56.6 is the national consensus standard for rough terrain forklift trucks. It contains rules about forklift safety, maintenance, safe operation, training, and supervision. Forklift owners should learn this standard and make it available for their operators, service personnel, and supervisors. These standards can be obtained, free of charge, from the Industrial Truck Standards Development Foundation (ITSDF) on their website at www.itsdf.org. The following references are examples from the standard, addressing forklift operators:

A.) OPERATOR TRAINING QUALIFICATIONS

1.) The user shall ensure that operators understand that safe operation is the operator's responsibility. The user shall ensure that operators are knowledgeable of, and observe, all safety rules and practices.
2.) Create an effective operator training program centered around user company's policies, operating conditions, and rough terrain forklift trucks. The program should be presented completely to all new operators and not be condensed for those claiming previous experience.
3.) Information on operator training is available from several sources, including rough terrain forklift truck manufacturers, users, government agencies, etc.
4.) An operator training program should consist of the following:

a.) careful selection of the operator, considering physical qualifications, job attitude, and aptitude;
b.) emphasis on safety of stock, equipment, operator, and other personnel;
c.) citing of rules and why they were formulated;
d.) basic fundamentals of rough terrain forklift truck and component design as related to safety, e.g., in.-lb (N-m) loading, mechanical limitations, center of gravity, stability, etc.;
e.) introduction to equipment, control locations, and functions. Explain how they work when used properly and problems when used improperly.
f.) supervise practice on operating course remote from normal activity and designed to simulate actual operations, e.g., lumber stacking, elevating shingles to the roof, etc.;
g.) oral, written, and operational performance tests and evaluations during and at completion of the course;
h.) refresher courses, which may be condensed versions of the primary course, and periodic "on job" operator evaluation;
i.) understanding of nameplate data and operator instructions and warning information appearing on the rough terrain forklift truck.

B.) GENERAL SAFETY PRACTICES

1.) Rough terrain forklift trucks can cause injury if improperly used or maintained.
2.) Only authorized operators trained to adhere strictly to all operating instructions shall be permitted to operate rough terrain forklift trucks. Unusual operating conditions may require additional safety precautions, training, and special operating instructions.
3.) Modifications and additions which affect capacity or safe operation shall not be preformed without the manufacturer's prior written approval. Where such authorization is granted, capacity, operation, and maintenance instruction plates, tags, or decals shall be changed accordingly.
4.) If the rough terrain forklift truck is equipped with front end attachment(s) or optional forks, the user shall see that the truck is marked to identify the forks or attachment(s), show the approximate weight of the truck and fork or attachment combination, and show the capacity of the truck with forks or attachment(s) at maximum elevation with load laterally centered.
5.) The user shall see that all nameplates and caution and instruction markings are in place and legible.
6.) The user shall consider that changes in load dimension may affect rough terrain forklift truck capacity.

https://truckmanualshub.com/

B.) GENERAL SAFETY PRACTICES (cont.)

7.) Where steering can be accomplished with either hand and the steering mechanism is of a type that prevents road reactions from causing the handwheel to spin (power steering or equivalent), steering knobs may be used. When used, steering knobs shall be of a type that can be engaged by the operator's hand from the top and shall be within the periphery of the steering handwheel.
8.) Experience has shown that rough terrain forklift trucks which comply with stability requirements are stable when properly operated. However, improper operation, faulty maintenance, or poor housekeeping may contribute to a condition of instability and defeat the purpose of the requirements.
9.) Users shall give consideration to special operating conditions. The amount of forward and rearward tilt to be used is governed by the application. Although the use of maximum rearward tilt is allowable under certain conditions, such as traveling with the load lowered, the stability of a rough terrain forklift truck as determined by standardized tests does not encompass consideration for excessive tilt at high elevations or the operation of trucks with excessive off-center loads.
10.) Some of the conditions which may affect stability are ground and floor conditions, grade, speed, loading (rough terrain forklift trucks equipped with attachments behave as partially loaded trucks even when operated without a load on the attachment), dynamic and static forces, improper tire inflation, and the judgement exercised by the operator.

C.) OPERATING SAFETY RULES AND PRACTICES

1.) Safe operation is the responsibility of the operator.
2.) This equipment can be dangerous if not used properly. The operator shall develop safe working habits and also be aware of hazardous conditions in order to protect himself, other personnel, the rough terrain forklift truck, and other material.
3.) The operator shall be familiar with the operation and function of all controls and instruments before undertaking to operate the rough terrain forklift truck.
4.) Before operating any rough terrain forklift truck, truck operators shall have read and be familiar with the operator's manual for the particular truck being operated.
5.) Before starting to operate the rough terrain forklift truck:
    a.) be in operating position and fasten seat belt;
    b.) place directional controls in neutral;
    c.) apply brakes;
    d.) start engine.
6.) Do not start or operate the rough terrain forklift truck, any of its functions, or attachments from any place other than the designated operator's position.
7.) Keep hands and feet inside the operator's designated area or compartment. Do not put any part of the body outside the operator compartment of the rough terrain forklift truck.
8.) Never put any part of the body into the mast structure or between the mast and the rough terrain forklift truck.
9.) Never put any part of the body within the reach mechanism of the rough terrain forklift truck or other attachments.
10.) Understand rough terrain forklift limitations and operate the truck in a safe manner so as not to cause injury to personnel.
11.) Do not allow anyone to stand or pass under the elevated portion of any rough terrain forklift truck, whether empty or loaded.
12.) Do not permit passengers to ride on rough terrain forklift trucks.
13.) Check clearance carefully before driving under electrical lines, bridges, etc.
14.) A rough terrain forklift truck is attended when the operator is less than 25 ft (7.6m) from the truck, which remains in his view.
15.) A rough terrain forklift truck is unattended when the operator is 25ft (7.6m) or more from the truck, which remains in his view, or whenever the operator leaves the truck and it is not in his view.
16.) Before leaving the operator's position:
    a.) bring rough terrain forklift truck to a complete stop;
    b.) place directional controls in neutral;
    c.) apply the parking brake;
    d.) lower load-engaging means fully, unless supporting an occupied elevated platform;
    e.) stop the engine;
    f.) if the rough terrain forklift truck must be left on an incline, block the wheels;
    g.) fully lower the load-engaging means.
17.) Maintain a safe distance from the edge of ramps, platforms, and other similar working surfaces.
18.) Do no move railroad cars or trailer with a rough terrain forklift truck.

https://truckmanualshub.com/

C.) OPERATING SAFETY RULES AND PRACTICES (cont.)

19.) Do not use a rough terrain forklift truck for opening or closing railroad car doors.
20.) In areas classified as hazardous, use only rough terrain forklift trucks approved for use in those areas.
21.) Report all accidents involving personnel, building structures, and equipment to the supervisor or as directed.
22.) Do not add to, or modify, the rough terrain forklift truck.
23.) Do not block access to fire aisles, stairways, and fire equipment.
24.) For rough terrain forklift trucks equipped with a differential lock, the lock should not be engaged when driving on the road or at high speeds or when turning. If the lock is engaged when turning, there could be loss of steering control.
25.) Observe all traffic regulations including authorized speed limits. Under normal traffic conditions, keep to the right, maintain a safe distance, based on speed of travel, from the truck ahead; and keep the truck under control at all times.
26.) Yield the right-of-way to pedestrians and emergency vehicles such as ambulances and fire trucks.
27.) Do not pass another truck traveling in the same direction at intersections, blind spots, or at other dangerous locations.
28.) Slow down and sound the audible warning device(s) at cross-aisles and other locations where vision is obstructed.
29.) Cross railroad tracks at an angle wherever possible. Do not park closer than 6 ft (1.8m) to the nearest rail of a railroad track.
30.) Keep a clear view of the path of travel and observe other traffic, personnel, and safe clearances.
31.) If the load being carried obstructs forward view, travel with the load trailing.
32.) Ascend or descend grades slowly and with caution.
    a.) When ascending or descending grades in excess of 5%, loaded rough terrain forklift trucks should be driven with the load upgrade.
    b.) Unloaded rough terrain forklift trucks should be operated on all grades with the load-engaging means downgrade.
    c.) On all grades, the load and load-engaging means shall be tilted back, if applicable, and raised only as far as necessary to clear the road surface.
    d.) Avoid turning, if possible, and use extreme caution on grades, ramps, or inclines; normally travel straight up or down.
33.) Under all travel conditions, operate the rough terrain forklift truck at a speed that will permit it to be brought to a stop in a safe manner.
34.) Travel with load-engaging means or load low and, where possible, tilted back. Do not elevate the load except during stacking.
35.) Make starts, stops, turns, or direction reversals in a smooth manner so as not to shift load and/or overturn the rough terrain forklift truck.
36.) Do not indulge in stunt driving or horseplay.
37.) Slow down for wet and slippery surfaces.
38.) Before driving over a dockboard or bridge plate, be sure that it is properly secured. Drive carefully and slowly across the dockboard or bridge plate, and never exceed its rated capacity.
39.) Do not drive rough terrain forklift trucks onto any elevator unless specifically authorized to do so. Approach elevators slowly, and then enter squarely after the elevator car is properly leveled. Once on the elevator, neutralize the controls, shut off engine, and set brakes. It is advisable that all other personnel leave the elevator before truck is allowed to enter or leave.
40.) Avoid running over loose objects on the roadway surface.
41.) When negotiating turns, reduce speed to a safe level, and turn steering handwheel in a smooth sweeping motion. Except when maneuvering at a very low speed, turn the steering handwheel at a moderate, even rate.
42.) Use special care when traveling without load, as the risk of lateral overturning is greater.
43.) Improper use of stabilizer controls (if so equipped) could cause rough terrain forklift truck upset. Always lower the carriage before operating stabilizer controls.
44.) For rough terrain forklift trucks equipped with lateral leveling:
    a.) Always level the frame before raising the boom or mast, with or without a load.
    b.) Lateral leveling should not be used to position an elevated load; instead, lower the load and reposition the rough terrain forklift truck.
45.) Handle only stable or safely arranged loads.
    a.) When handling off-center loads which cannot be centered, operate with extra caution.
    b.) Handle only loads within the capacity of the rough terrain forklift truck.
    c.) Handle loads exceeding the dimensions used to establish rough terrain forklift truck capacity with extra caution. Stability and maneuverability may be adversely affected.

https://truckmanualshub.com/

C.) OPERATING SAFETY RULES AND PRACTICES (cont.)

46.) When attachments are used, extra care shall be taken in securing, manipulating, positioning, and transporting the load. Operate rough terrain forklift trucks equipped with attachments as partially loaded trucks when not handling a load.

47.) Completely engage the load with the load-engaging means. Fork length should be at least two-thirds of load length. Where tilt is provided, carefully tilt the load backward to stabilize the load. Caution should be used in tilting backward with high or segmented loads.

48.) Use extreme care when tilting load forward or backward, particularly when high tiering. Do not tilt forward with load-engaging means elevated except to pick up or deposit a load over a rack or stack. When stacking or tiering, use only enough backward tilt to stabilize the load.

49.) The handling of suspended loads by means of a crane arm (boom) or other device can introduce dynamic forces affecting the stability of a rough terrain forklift truck. Grades and sudden starts, stops, and turns can cause the load to swing and create a hazard if not externally stabilized. When handling suspended loads:

a.) do not exceed the truck manufacturer's capacity of the rough terrain forklift truck as equipped for handling suspended loads.

b.) only lift the load vertically and never drag it horizontally;

c.) transport the load with the bottom of the load and the mast as low as possible;

d.) with load elevated, maneuver the rough terrain forklift truck slowly and cautiously, and only to the extent necessary to permit lowering to the transport position;

e.) use tag lines to restrain load swing whenever possible.

50.) At the beginning of each shift and before operating the rough terrain forklift truck, check its condition, giving special attention to:

a.) tires and their inflation pressure

b.) warning devices

c.) lights

d.) lift and tilt systems, load-engaging means, chains, cables, and limit switches

e.) brakes

f.) steering mechanism

g.) fuel system(s)

51.) If the rough terrain forklift truck is found to be in need of repair or in any way unsafe, or if it contributes to an unsafe condition, the matter shall be reported immediately to the user's designated authority, and the truck shall not be operated until it has been restored to safe operating condition.

52.) If during operation the rough terrain forklift truck becomes unsafe in any way, the matter shall be reported immediately to the user's designated authority, and the truck shall not be operated until it has been restored to safe operating condition.

53.) Do not make repairs or adjustments unless specifically authorized to do so.

54.) When refueling, smoking in the area shall not be permitted, the engine shall be stopped, and the operator shall not be on the rough terrain forklift
truck.

55.) Spillage of oil or fuel shall be carefully and completely absorbed or evaporated and fuel tank cap replaced before restarting engine.

56.) Do not use open flames when checking electrolyte level in storage batteries, liquid level in fuel tanks, or the condition of LPG fuel lines and connectors.

57.) Do not lift personnel with the forklift. If the forklift must be used to lift people, precautions for the protection of the personnel must be taken (see ITSDF B56.6, chapter 5.15 Elevating Personnel).

https://truckmanualshub.com/

D.) SUSPENDED LOADS

A jib or truss boom should ONLY be used to lift and place loads when the machine is stationary and the frame is level. Transporting suspended loads must ALWAYS be done slowly and cautiously, with the boom and load as low as possible. Use taglines to restrict loads from swinging, to avoid overturn.

The handling of suspended loads by means of a truss boom or other similar device can introduce dynamic forces affecting the stability of the machine that are not considered in the stability criteria of industry test standards. Grades and sudden starts, stops and turns can cause the load to swing and create a hazard.

Guidelines for "Free Rigging / Suspended Loads"

1. DO NOT exceed the rated capacity of the telescopic handler as equipped for handling suspended loads. The weight of the rigging must be included as part of the load.

2. During transport, DO NOT raise the load more than 12 inches (305 mm) above the ground, or raise the boom more than 45 degrees.

3. Only lift the load vertically – NEVER drag it horizontally.

4. Use multiple pickup points on the load when possible. Use taglines to restrain the load from swinging and rotating.

5. Start, travel, turn and stop SLOWLY to prevent the load from swinging. DO NOT exceed walking speed.

6. Inspect rigging before use. Rigging must be in good condition and in the U.S. comply with OSHA regulation §1910.184, "Slings," or §1926.251, "Rigging equipment for material handling."

7. Rigging equipment attached to the forks must be secured such that it cannot move either sideways or fore and aft. The load center must not exceed 24 inches (610 mm).

8. DO NOT lift the load with anyone on the load, rigging or lift equipment, and NEVER lift the load over personnel.

9. Beware of the wind, which can cause suspended loads to swing, even with taglines.

10. DO NOT attempt to use frame-leveling to compensate for load swing.

WARNING

U.S. OSHA regulations effective November 8, 2010 (29 CFR Part 1926, Subpart CC - Cranes and Derricks in Construction) include requirements for employers that use powered industrial trucks ("forklifts") configured to hoist (by means of a winch or hook) and move suspended loads horizontally. In particular, this regulation applies to any rough-terrain forklift (e.g., "telescopic handler") equipped with a jib or truss boom with a hook (with or without a winch), or a hook assembly attached to the forks. [Note: This regulation is in addition to the OSHA regulation that requires specific forklift operator training: §1910.178(l).]

When a forklift / telescopic handler is configured and used for hoisting, the employer must ensure that:

1. **Forklift, lift equipment and rigging have been inspected (each shift, month and year) and are in good, safe condition and properly installed.**

2. **An operator's manual and applicable load charts are on the forklift.**

3. **Work zone ground conditions can support the equipment and load. Any hazardous conditions in the work area have been identified, and the operator notified.**

4. **Equipment is being used within its rated capacity and in accordance with the manufacturer's instructions.**

https://truckmanualshub.com/

5. **Operator and crew members have been trained in the safe use and operation of the equipment, including how to avoid electrocution.**

6. **During use, no part of the equipment, load line or load will be within the minimum clearance distance specified by OSHA [10 feet (3.0 m), and more for lines rated over 50 kV] of any energized power line, and any taglines used are non-conductive.**

7. **In addition, for lift equipment with a rated capacity greater than 2000 lbs. (907 kg), the employer must ensure that:**

   a.) An accessible fire extinguisher is on the forklift;

   b.) Monthly and annual inspections are performed and documented, and records retained (three months for monthly, one year for annual);

   c.) Before November 10, 2014, operators must have had the additional training and qualification / certification required by OSHA regulations §1926.1427 and §1926.1430.

Note: Refer to the full text of the OSHA crane regulation (29 CFR Part 1926, Subpart CC) for a detailed description

---

https://truckmanualshub.com/

CONCLUSION:

1.) ATTEND OPERATOR TRAINING CLASSES

The forklift operator must clearly understand all instructions concerning the safe operation of the forklift and all safety rules and regulations of the work site. They must have successfully completed a training coarse in accordance with the Powered Industrial Truck Standard (29 CFR 1910.178) as described by the Occupational Safety and Health Administration (OSHA). They must be qualified as to their visual, hearing, physical, and mental ability to operate the equipment safely. NEVER use drugs or alcohol while operating a forklift! NEVER operate or allow anyone to operate a forklift when mental alertness or coordination is impaired! An operator on prescription or over-the-counter drugs must consult a medical professional regarding any side effects of the medication that may impair their ability to safely operate the forklift.

2.) CREATE A MAINTENANCE PROGRAM

OSHA recommends a maintenance log, listing repairs requested and completed, for each forklift. Also, “lock out tag procedures” should be utilized. If the forklift malfunctions; park it safely, remove the key, tag “Do Not Use”, and report the problem to the proper authority or authorized service personnel immediately.

ROUGH TERRAIN FORKLIFT TRUCK GENERAL SAFETY STANDARDS (cont.)

2.) CREATE A MAINTENANCE PROGRAM (cont.)

For the best forklift performance and operation, a maintenance program is required. Use the hour meter on the instrument panel to keep maintenance properly scheduled (see SECTION TWO - “Servicing Schedule”). For repairs on major components (engine, transmission, etc.), contact your nearest dealer for a Repair Manual. Do not operate a forklift that is damaged or does not function properly. Only authorized personnel may make repairs or adjustments to the lift truck. After repairs, the lift truck must be tested for safe operation before returning to service.

3.) FORKLIFT KNOWLEDGE

Forklift trucks can cause serious injury if improperly used or maintained. Study all of the manuals provided for your forklift model. Learn the locations and meanings of all safety decals. If any decals are illegible or missing, have them replaced immediately. Make sure all safety features provided by the original manufacturer are in place and function properly. Do not operate a forklift with damaged, missing or unsafe components. Have it repaired by authorized service personnel. Learn the functions of all controls, gauges, indicator lights, etc. on the forklift. Know the speed/gear ranges, braking and steering capabilities, load ratings and clearances. When referring to the location of forklift components, the terms “left”, “right”, “front”, and “rear” are related to the operator seated normally, facing forward in the operator’s seat. If you have any questions about the forklift, consult your supervisor. Failure to fully understand or obey safety warnings can result in serious injury or death!

4.) WORK SITE KNOWLEDGE

Before operating on a work site, learn the rules for movement of people, forklifts and all other traffic. Check the size, weight, and condition of the loads you will be expected to handle. Verify that they are properly secured and safe to transport. Learn where the loads are to be placed, planning your route for a safe approach, watching for hazardous conditions. Will a signal man be required to help place the load? Remove any debris which may cause tire damage or rupture. Plan your route around problem areas or have them corrected. Inform the supervisor of any unsafe conditions observed at the site. Examples of hazards: power lines, cables, low clearance structures, garage doors, telephone pole guide lines, fencing, loose lumber, building materials, drop-offs, trenches, rough/soft spots, oil spills, deep mud, steep inclines, railroad tracks, curbs, etc.. NEVER approach power lines, gas lines or other utilities with the forklift! Always verify that local, state/provincial and federal regulations have been met. Report any accidents involving personnel, building structures, and equipment to the supervisor immediately. Always remain alert - conditions are constantly changing at the work site!

TECHNICAL SUPPORT

All data provided in this manual is subject to production changes, addition of new models, and improved product designs. If a question arises regarding your forklift, please consult your dealer or Manitou NA, Inc. for the latest information. When ordering service parts or requesting technical information, be prepared to quote the applicable Model/Serial Numbers.

https://truckmanualshub.com/

SAFETY MESSAGES

NOTE THE SAFETY ALERT SYMBOL (SHOWN BELOW). IT IDENTIFIES POTENTIAL HAZARDS WHICH, IF NOT AVOIDED MAY RESULT IN INJURY OR DEATH! Also, observe the safety messages places throughout this manual; providing special instructions, telling you when to take precautions and to identify potential hazards. The safety messages are highlighted and outlined in a box similar to those shown in the examples below.

SAFETY ALERT SYMBOL

NOTE or NOTICE
Provides information, special instructions or references about the lift truck.

IMPORTANT
Precautions which must be taken to avoid damage to the lift truck.

CAUTION
Indicates a potentially hazardous situation which, if not avoided, may result in minor or moderate injury. May also alert unsafe practices.

WARNING
Indicates a potentially hazardous situation which, if not avoided, *may result in death or serious injury!*

DANGER
Indicates an imminently hazardous situation which, if not avoided, *will result in death or serious injury.*

CALIFORNIA PROPOSITION 65 WARNING

Diesel Engine Exhaust and some of its constituents are known to the State of California to cause cancer, birth defects or other reproductive harm.

WARNING: Battery posts, terminals and related accesories and related accessories contain lead and lead compounds. **Wash hands after handling.**

https://truckmanualshub.com/

SAFETY DECALS

The purpose of this chapter is to introduce you to the safety messages, decals, and nameplates found on your forklift truck. The decals are identified by name, part number, location, and a brief description. (The forklift model logos, and other misc. decals not shown, can be found in your forklift parts manual.) The decals illustrated may not be exactly the same as those installed on your forklift; installation of the decals varies depending on the forklift model, series, decal updates, etc.. The size and location of some decals limit the amount of information that can be placed upon it. For this reason, additional detailed information not found on the decals is provided through-out this manual.

Every decal placed on the lift truck is important; they are constant reminders of safety and instructions that should never be taken for granted. Even experienced operators can be seriously injured or killed by ignoring, refusing to enforce, or forgetting to follow safe operating procedures! Do not assume you know all safety issues concerning the decals. Before operating the lift truck; learn the meaning(s) of the decals as described in this manual. If any decal becomes illegible or missing, have it replaced immediately! Always replace decals using the same decal part no., unless otherwise specified by the manufacturer. For replacement decals not found in your parts manual, contact your nearest dealer. If you have any questions, contact your supervisor or nearest dealer for advice before operating your forklift!

Before Starting - 801011

(Boom equipped models). Location: on the brake fluid cover panel (to the left and below the dash panel).

Safety Instructions - 420792

(Mast equipped models). Location: on or near the operator manual storage case, and/or on the dash panel.

Instructions for the forklift operator; before operating the forklift.

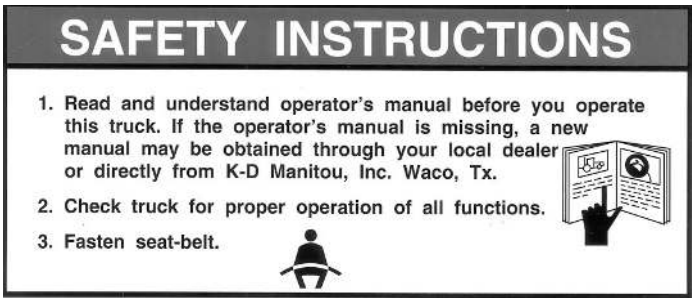

801011

Use of Seat Belt - 801012

(Boom equipped models). Location: to the right of the operator, near the hydraulic control lever.

Instructs the operator to always wear the seat belt during operations, and never jump from an over-turning forklift.

https://truckmanualshub.com/

Emergency and Parking Brake - 801010

Location: near the park brake lever.

Identifies the Emergency/Parking Brake Lever.

Alarm Must Sound - 496162

Location: on the dash, in direct view of the operator.

The backup alarm must sound when the forklift is placed in reverse gear.

No Riders - 420732

Location: on the cab entrance(s), and on or near wheel fenders and engine cover.

Informs: riders are not allowed on the forklift.

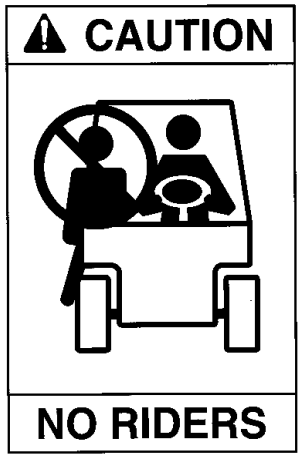

Clear of Raised Boom - 801006

(Boom equipped models). Location: on both sides of the boom nose.

Keep away from unsupported boom.

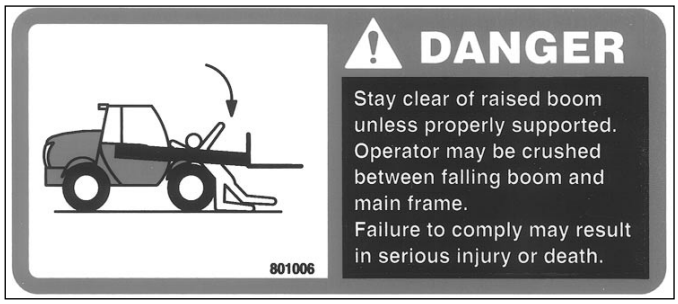

Clear of Power Lines - 801007

(Boom equipped models). Location: on both sides of the boom nose.

Keep away from power lines.

https://truckmanualshub.com/

Use of Frame Leveling - 801013

(Boom equipped models). Location: to the right of the operator near the hydraulic control lever.

Frame leveling notice; load must be lowered.

Attachment and Boom Safety - 801009

(Boom equipped models). Location: on both sides of the boom nose.

Important reminders of attachment and boom safety.

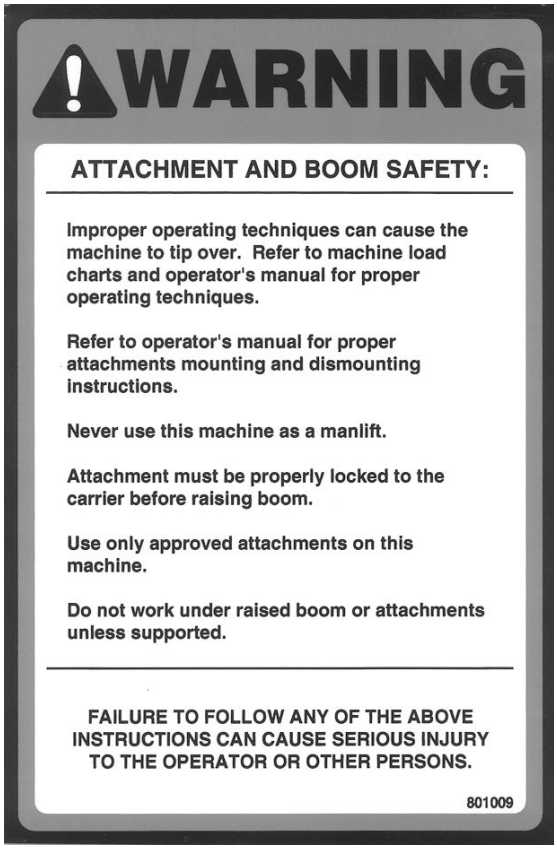

Hydraulic Coupling - 234805

Location: near the quick-disconnect adapters.

Stop the engine and release hydraulic pressure before changing attachments.

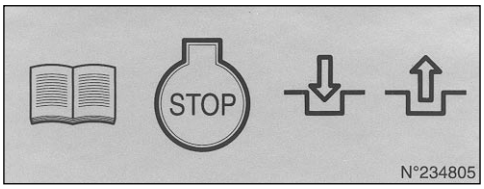

Rotating Fan and Belt(s) - 801008

Location: on the radiator near the fan, and on any fan belt/pulley cover(s).

Keep hands and clothing away from rotating fan and belts.

https://truckmanualshub.com/

Gear Shift Pattern - 33460

(4-speed transmission models). Location: near the gear shift lever.

Identifies the gear shift pattern of the forklift transmission.

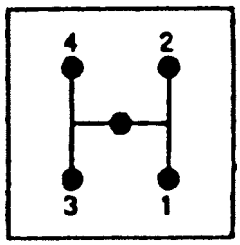

Steering Mode - 184276

(4 wheel steer equipped models). Location: near the steering mode selection lever.

Identifies the steering mode selection.

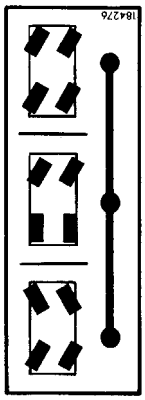

Mineral Oil (Brake Reservoir) - 221322 or 234800 has been replaced by 164091.

Location: near the brake fluid reservoir where applicable.

Refer to the Operator/Service Manual for the correct brake fluid (mineral oil) to be used in the brake system.

221322

234800

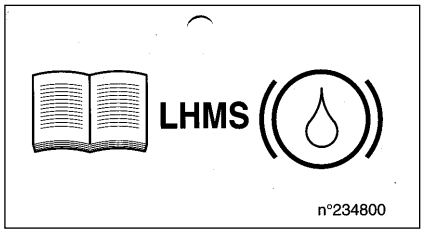

https://truckmanualshub.com/

Hydraulic Oil - 234798 or 76573

Location: on the hydraulic tank or filler cap.

Identifies the hydraulic reservoir (tank) or filler cap.

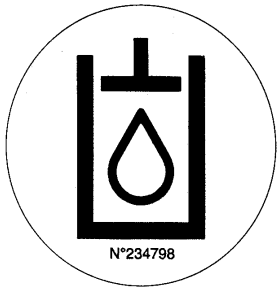

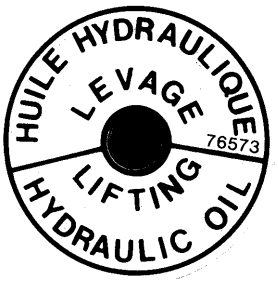

Hydraulic Oil - 61024

Location: on the hydraulic tank.

Identifies the hydraulic reservoir (tank).

Anti-Freeze - 234799

Location: on the radiator, near the radiator filler cap.

Indicates required minimum to maximum anti-freeze protection (-22^{0}F to -40^{0}F).

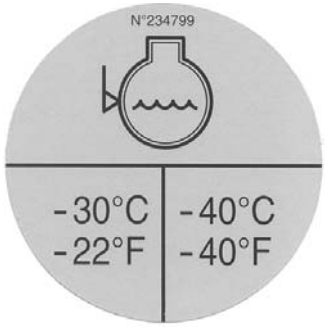

Diesel Fuel - 161101

Location: on the fuel tank, near the filler cap.

Identifies the fuel tank, and use of diesel fuel.

No Step - 496735

Location: varies, depending on the forklift model.

Instructs personnel not to use the designated area as a step.

Do Not Tow - 494918

(Hydrostatic equipped models). Location: on the dash, in view of the operator.

Towing the forklift will damage the transmission; refer to the operator's manual.

https://truckmanualshub.com/

Attachment Warning - 421016

(Boom equipped models). Location: on the boom coupler, near where the retaining shaft is installed.

Reminder to operator; install attachment retaining shaft and safety pin before operations.

Hook Here - 24653

Location: at points provided on the forklift, where straps or chains may be attached to secure the forklift to a trailer during transport.

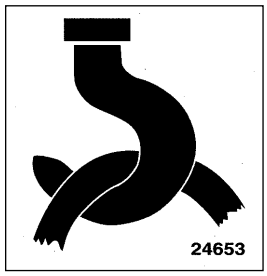

Fork Safety - 426641

(Mast equipped models). Location: on the front and back side of the mast's outer rails, at eye level (4 required).

Instructs personnel not to travel beneath or upon the lift truck forks.

Pinch Point, Large, 2.5 x 4.5 in. - 426643
Pinch Point, Small, 1.5 x 2.75 in. - 426642

(Mast equipped models). Location: on the front and rear sides of the mast cross bracing.

Keep fingers away from the mast crossbracing.

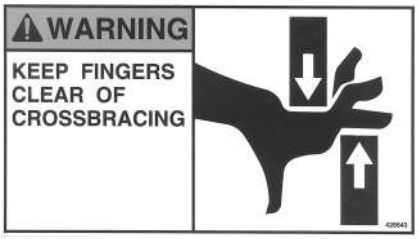

HAND THROTTLE DANGER - 804784

(Boom equipped models, option). Location: Near the hand throttle mechanism.

Reminder to operator; set parking brake before operating hand throttle. Disengage hand throttle before leaving the forklift.

https://truckmanualshub.com/

SAFETY DECALS

Acid in Battery - 801014

Location: in or near the battery storage compartment.

Addresses battery hazards.

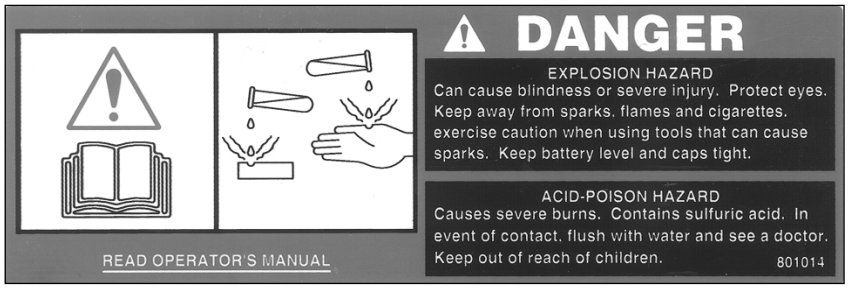

Jump Start Battery - 801015

Location: in or near the battery storage compartment.

Jump start instructions.

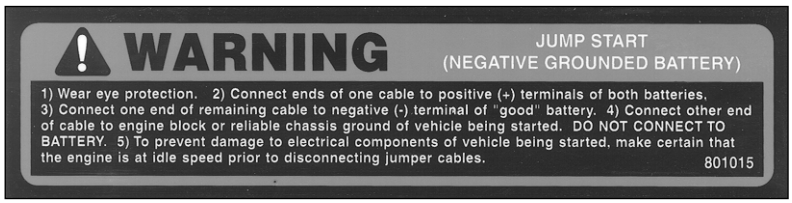

Attachment Plate - 425995

Location: on the optional removeable forklift attachment.

Important manufacturer information about the attachment. Record this information for use when contacting the maufacturer for parts and service.

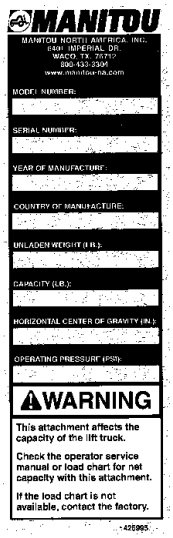

Overhead Guard Data Plate - B6109

Location: attached to the overhead guard.

Overhead guard conformity.

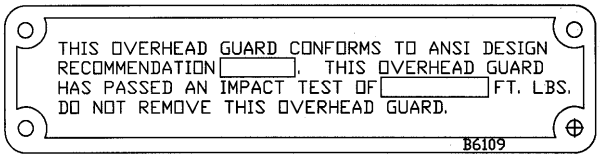

Forklift Data Plate - 496550

(Boom equipped models)

Forklift Data Plate - 283688

Location: within the operator's compartment.

Important forklift truck identification. Record this information for use when contacting the manufacturer for parts and service.

496550

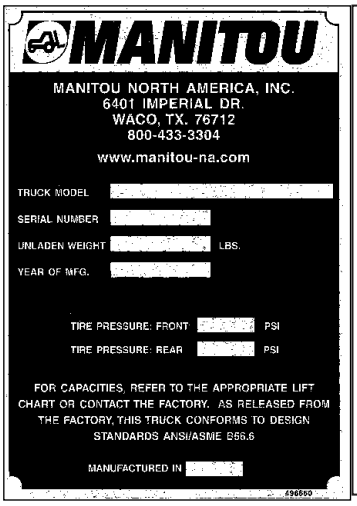

283688

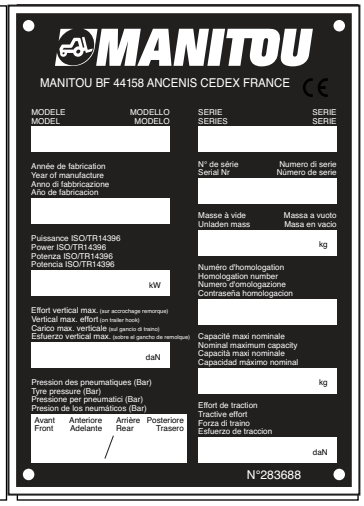

https://truckmanualshub.com/

https://truckmanualshub.com/

1 - OPERATING AND SAFETY INSTRUCTIONS

https://truckmanualshub.com/

https://truckmanualshub.com/

TABLE OF CONTENTS

INSTRUCTIONS TO THE COMPANY MANAGER 1 - 4

THE SITE **1 - 4**
THE OPERATOR **1 - 4**
THE LIFT TRUCK **1 - 4**
A - THE LIFT TRUCK'S SUITABILITY FOR THE JOB 1 - 4
B - ADAPTATION OF THE LIFT TRUCK TO STANDARD ENVIRONMENTAL CONDITIONS 1 - 4
C - MODIFICATION OF THE LIFT TRUCK 1 - 5
D - FRENCH ROAD TRAFFIC RULES **(or see current legislation in other countries)** 1 - 5
THE INSTRUCTIONS **1 - 5**
THE MAINTENANCE **1 - 5**

INSTRUCTIONS FOR THE OPERATOR 1 - 6

PREAMBULE **1 - 6**
GENERAL INSTRUCTIONS **1 - 6**
A - OPERATOR'S MANUAL 1 - 6
B - AUTHORIZATION FOR USE IN FRANCE **(or see current legislation in other countries)** 1 - 6
C - MAINTENANCE 1 - 6
D - MODIFICATION OF THE LIFT TRUCK 1 - 6
E - LIFTING PEOPLE 1 - 7
OPERATING INSTRUCTIONS UNLADEN AND LADEN **1 - 8**
A - BEFORE STARTING THE LIFT TRUCK 1 - 8
B - DRIVER'S OPERATING INSTRUCTIONS 1 - 8
C - ENVIRONMENT 1 - 9
D - VISIBILITY 1 - 9
E - STARTING THE LIFT TRUCK 1 - 10
F - DRIVING THE LIFT TRUCK 1 - 10
G - STOPPING THE LIFT TRUCK 1 - 11
H - DRIVING THE LIFT TRUCK ON THE PUBLIC HIGHWAY **(or see current legislation in other countries)** 1 - 12
INSTRUCTIONS FOR HANDLING A LOAD **1 - 14**
A - CHOICE OF ATTACHMENTS 1 - 14
B - MASS OF LOAD AND CENTRE OF GRAVITY 1 - 14
C - LONGITUDINAL STABILITY LIMITER AND WARNING DEVICE 1 - 14
D - TRANSVERSE ATTITUDE OF THE LIFT TRUCK 1 - 15
E - TAKING UP A LOAD ON THE GROUND 1 - 15
F - TAKING UP AND LAYING A HIGH LOAD ON TYRES 1 - 16
G - TAKING UP AND LAYING A HIGH LOAD ON STABILIZERS 1 - 18
H - TAKING UP AND LAYING DOWN A SUSPENDED LOAD 1 - 20
I - TRAVELLING WITH A SUSPENDED LOAD 1 - 20
PLATFORM OPERATING INSTRUCTIONS **1 - 21**
A - AUTHORISATION FOR USE 1 - 21
B - SUITABILITY OF THE PLATFORM FOR THE JOB 1 - 21
C - PRECAUTIONS WHEN USING THE PLATFORM 1 - 21
D - USING THE PLATFORM 1 - 21
E - ENVIRONMENT 1 - 21
F - MAINTENANCE 1 - 22
INSTRUCTIONS FOR USING THE RADIO-CONTROL **1 - 23**

MAINTENANCE INSTRUCTIONS OF THE LIFT TRUCK 1 - 24

GENERAL INSTRUCTIONS **1 - 24**
MAINTENANCE **1 - 24**
LUBRICANT AND FUEL LEVELS **1 - 24**
HYDRAULIC **1 - 24**
ELECTRICITY **1 - 24**
WELDING **1 - 25**
WASHING THE LIFT TRUCK **1 - 25**

IF THE LIFT TRUCK IS NOT TO BE USED FOR A LONG TIME 1 - 26

INTRODUCTION **1 - 26**
PREPARING THE LIFT TRUCK **1 - 26**
PROTECTING THE I.C. ENGINE **1 - 26**
PROTECTING THE LIFT TRUCK **1 - 26**
BRINGING THE LIFT TRUCK BACK INTO SERVICE **1 - 27**

https://truckmanualshub.com/

INSTRUCTIONS TO THE COMPANY MANAGER

THE SITE

- Proper management of lift truck's area of travel will reduce the risk of accidents:
  . ground not unnecessarily uneven or obstructed,
  . no excessive slopes,
  . pedestrian traffic controlled, etc.

THE OPERATOR

- Only qualified, authorized personnel can use the lift truck. This authorization is given in writing by the appropriate person in the establishment with respect to the use of lift trucks and must be carried permanently by the operator.

On the basis of experience, there are a number of possible situations in which operating the lift truck is contra-indicated. Such foreseeable abnormal uses, the main ones being listed below, are strictly forbidden.

- The foreseeable abnormal behaviour resulting from ordinary neglect, but does not result from any wish to put the machinery to any improper use.
- The reflex reactions of a person in the event of a malfunction, incident, fault, etc. during operation of the lift truck.
- Behaviour resulting from application of the «principle of least action» when performing a task.
- For certain machines, the foreseeable behaviour of such persons as: apprentices, teenagers, handicapped persons, trainees tempted to drive a lift truck, operator tempted to operate a truck to win a bet, in competition or for their own personal experience.

The person in charge of the equipment must take these criteria into account when assessing whether or not a person will makea suitable driver.

THE LIFT TRUCK

A - THE TRUCK'S SUITABILITY FOR THE JOB

- MANITOU has ensured that this lift truck is suitable for use under the standard operating conditions defined in this operator's manual, in accordance to ASME B56.6 - 2002
- Before commissioning, the company manager must make sure that the lift truck is appropriate for the work to be done, and perform certain tests (in accordance with current legislation).

B - ADAPTATION OF THE LIFT TRUCK TO STANDARD ENVIRONMENTAL CONDITIONS

- In addition to series equipment mounted on your lift truck, many options are available, such as: road lighting, stop lights, flashing light, reverse lights, reverse buzzer alarm, front light, rear light, light at the jib head, etc… (as model of lift truck).
- The operator must take into account the operating conditions to define the lift truck's signalling and lighting equipment. Contact your dealer.
- Take into account climatic and atmospheric conditions of the site of utilisation.
  . Protection against frost (see: 3 - MAINTENANCE: LUBRICANTS AND FUEL).
  . Adaptation of lubricants (ask your dealer for information).
  . I.C. engine filtration (see: 3 - MAINTENANCE: FILTERS CARTRIDGES AND BELTS).

For operation under average climatic conditions, i.e.: between - 15 °C and + 35 °C, correct levels of lubricants in all the circuits are checked in production. For operation under more severe climatic conditions, before starting up, it is necessary to drain all the circuits, then ensure correct levels of lubricants using lubricants properly suited to the relevant ambient temperatures. It is the same for the cooling liquid.

- A lift truck operating in an area without fire extinguishing equipment must be equipped with an individual extinguisher. There are solutions, consult your dealer.

Your lift truck is designed for outdoor use under normal atmospheric conditions and indoor use in suitably aerated and ventilated premises. It is prohibited to use the lift truck in areas where there is a risk of fire or which are potentially explosive (e.g. Refineries, fuel or gas depots, stores of inflammable products…). For use in these areas, specific equipment is available (ask your dealer for information).

- Our trucks comply with Directive 2004/108/EC concerning electromagnetic compatibility (EMC), and with the corresponding harmonized norm EN 12895. Their proper operation is no longer guaranteed if they are used within areas in which the electromagnetic fields exceed the limit specified by that norm (10 V/m).
- Directive 2002/44/EC requires company managers to not expose their employees to excessive vibration doses. There is no recognized code of measurement for comparing the machines of different manufacturers. The actual doses received can therefore be measured only under actual operating conditions at the user's premises.
- The following are some tips for minimizing these vibration doses:
  - Select the most suitable lift truck and attachment for the intended use.
  - Adapt the seat adjustment to the operator's weight (according to lift truck model) and maintain it in good condition, as well as the cab suspension. Inflate the tires in accordance with recommendations.
  - Ensure that the operators adapt their operating speed to suit the conditions on site.
  - As far as possible, arrange the site in such a way as to provide a flat running surface and remove obstacles and harmful potholes.

https://truckmanualshub.com/

C - MODIFICATION OF THE LIFT TRUCK

- For your safety and that of others, you must not change the structure and settings of the various components used in your lift truck (hydraulic pressure, calibrating limiters, I.C. engine speed, addition of extra equipment, addition of counterweight, unapproved attachments, alarm systems, etc.) yourself. In this event, the manufacturer cannot be held responsible.

D - FRENCH ROAD TRAFFIC RULES

(or see current legislation in other countries)

- Only one certificate of conformity is issued. It must be kept in a safe place.

THE INSTRUCTIONS

- The operator's manual must always be in good condition and kept in the place provided on the lift truck and in the language used by the operator.
- The operator's manual and any plates or stickers which are no longer legible or are damaged, must be replaced immediately.

THE MAINTENANCE

- Maintenance or repairs other than those detailed in part: 3 - MAINTENANCE must be carried out by qualified personnel (consult your dealer) and under the necessary safety conditions to maintain the health of the operator and any third party.

Your lift truck must be inspected periodically to ensure that it remains in compliance. The frequency of this inspection is defined by current legislation in the country in which the lift truck is used.

https://truckmanualshub.com/

INSTRUCTIONS FOR THE OPERATOR

PREAMBLE

WHENEVER YOU SEE THIS SYMBOL IT MEANS:

WARNING ! BE CAREFUL ! YOUR SAFETY OR THE SAFETY OF THE LIFT TRUCK IS AT RISK.

The risk of accident while using, servicing or repairing your lift truck can be restricted if you follow the safety instructions and safety measures detailed in these instruction.

- Only the operations and manœuvres described in these operator's manual must be performed. The manufacturer cannot predict all possible risky situations. Consequently, the safety instructions given in the operator's manual and on the lift truck itself are not exhaustive.
- At any time, as an operator, you must envisage, within reason, the possible risk to yourself, to others or to the lift truck itself when you use it.

Failure to respect the safety and operating instructions, or the instructions for repairing or servicing your lift truck may lead to serious, even fatal accident.

GENERAL INSTRUCTIONS

A - OPERATOR'S MANUAL

- Read the operator's manual carefully.
- The operator's manual must always be in good condition and in the place provided for it on the lift truck.
- You must report any plates and stickers which are no longer legible or which are damaged.

B - AUTHORISATION FOR USE IN FRANCE

(or see current legislation in other countries)

- Only qualified, authorized personnel can use the lift truck. This authorization is given in writing by the appropriate person in the establishment with respect to the use of lift trucks and must be carried permanently by the operator.
- The operator is not competent to authorise the driving of the lift truck by another person.

C - MAINTENANCE

- The operator must immediately advise his superior if his lift truck is not in good working order or does not comply with the safety notice.
- The operator is prohibited from carrying out any repairs or adjustments himself, unless he has been trained for this purpose. He must keep the lift truck properly cleaned if this is among his responsibilities.
- The operator must carry out daily maintenance (see: 3 - MAINTENANCE: A - DAILY OR EVERY 10 HOURS SERVICE).
- The operator must ensure tyres are adapted to the nature of the ground (see area of the contact surface of the tyres in the chapter: 2 - DESCRIPTION: FRONT AND REAR TYRES). There are optional solutions, consult your dealer.
  - . SAND tyres.
  - . LAND tyres.
  - . Snow chains.

Do not use the lift truck if the tyres are incorrectly inflated, damaged or excessively worn, because this could put your own safety or that of others at risk, or cause damage to the lift truck itself. The fitting of foam inflated tyres is prohibited and is not guaranteed by the manufacturer, excepting prior authorisation.

D - MODIFICATION OF THE LIFT TRUCK

- For your safety and that of others, you must not change the structure and settings of the various components used in your lift truck (hydraulic pressure, calibrating limiters, I.C. engine speed, addition of extra equipment, addition of counterweight, unapproved attachments, alarm systems, etc.) yourself. In this event, the manufacturer cannot be held responsible.

https://truckmanualshub.com/

E - LIFTING PEOPLE

- The use of working equipment and load lifting attachments to lift people is:
  - either forbidden
  - or authorized exceptionally and under certain conditions (see current regulations in the country in which the lift truck is used).
- The pictogram posted at the operator station reminds you that:
  - Left-hand column
    - It is forbidden to lift people, with any kind of attachment, using a non PLATFORM-fitted lift truck.
  - Right-hand column
    - With a PLATFORM-fitted lift truck, people can only be lifted using platforms designed by MANITOU for the purpose.
- MANITOU sells equipment specifically designed for lifting people (OPTION PLATFORM lift truck, contact your dealer).

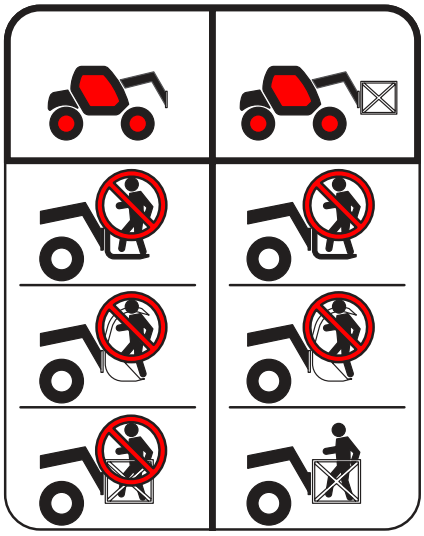

https://truckmanualshub.com/

OPERATING INSTRUCTIONS UNLADEN AND LADEN

A - BEFORE STARTING THE LIFT TRUCK

- Carry out daily maintenance (see: 3 - MAINTENANCE: A - DAILY OR EVERY 10 HOURS SERVICE).
- Make sure the lights, indicators and windscreen wipers are working properly.
- Make sure the rear view mirrors are in good condition, clean and properly adjusted.
- Make sure the horn works.

B - DRIVER'S OPERATING INSTRUCTIONS

- Whatever his experience, the operator is advised to familiarize himself with the position and operation of all the controls and instruments before operating the lift truck.
- Wear clothes suited for driving the lift truck, avoid loose clothes.
- Make sure you have the appropriate protective equipment for the job to be done.
- Prolonged exposure to high noise levels may cause hearing problems. It is recommended to wear ear muffs to protect against excessive noise.
- Always face the lift truck when getting into and leaving the driving seat and use the handle(s) provided for this purpose. Do not jump out of the seat to get down.
- Always pay attention when using the lift truck. Do not listen to the radio or music using headphones or earphones.
- Never operate the lift truck when hands or feet are wet or soiled with greasy substances.
- For increased comfort, adjust the seat to your requirements and adopt the correct position in the driver's cab.

Under no circumstances must the seat be adjusted while the lift truck is moving.

- The operator must always be in his normal position in the driver's cab. It is prohibited to have arms or legs, or generally any part of the body, protruding from the driver's cab of the lift truck.
- The safety belt must be worn and adjusted to the operator's size.
- The control units must never in any event be used for any other than their intended purposes (e.g. climbing onto or down from the lift truck, portmanteau, etc.).
- If the control components are fitted with a forced operation (lever lock) device, it is forbidden to leave the cab without first putting these controls in neutral.
- It is prohibited to carry passengers either on the lift truck or in the cab.

https://truckmanualshub.com/

C - ENVIRONMENT

- Comply with site safety regulations.
- If you have to use the lift truck in a dark area or at night, make sure it is equipped with working lights.
- During handling operations, make sure that no one is in the way of the lift truck and its load.
- Do not allow anybody to come near the working area of the lift truck or pass beneath an elevated load.
- When using the lift truck on a transverse slope, before lifting the jib, follow the instructions given in the paragraph: INSTRUCTIONS FOR HANDLING A LOAD: D - TRANSVERSE ATTITUDE OF THE LIFT TRUCK.
- Travelling on a longitudinal slope:
    - Drive and brake gently.
    - Moving without load: Forks or attachment facing downhill. 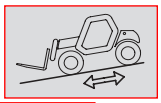
    - Moving with load: Forks or attachment facing uphill. 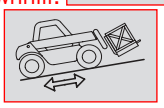
- Take into account the lift truck's dimensions and its load before trying to negotiate a narrow or low passageway.
- Never move onto a loading platform without having first checked:
    - That it is suitably positioned and made fast.
    - That the unit to which it is connected (wagon, lorry, etc.) will not shift.
    - That this platform is prescribed for the total weight of the lift truck to be loaded.
    - That this platform is prescribed for the size of the lift truck.
- Never move onto a foot bridge, floor or freight lift, without being certain that they are prescribed for the weight and size of the lift truck to be loaded and without having checked that they are in sound working order.
- Be careful in the area of loading bays, trenches, scaffolding, soft land and manholes.
- Make sure the ground is stable and firm under the wheels and/or stabilizers before lifting or removing the load. If necessary, add sufficient wedging under the stabilizers.
- Make sure that the scaffolding, loading platform, pilings or ground is capable of bearing the load.
- Never stack loads on uneven ground, they may tip over.

If the load or the attachment must remain above a structure for a long time, there is the risk that it will rest on the structure because of the jib descending owing to the oil in the cylinders cooling down.
To eliminate this risk:
- Regularly check the distance between the load or the attachment and the structure and readjust this if necessary.
- If possible use the lift truck at an oil temperature as close as possible to ambient temperature.

- In the case of work near aerial lines, ensure that the safety distance is sufficient between the working area of the lift truck and the aerial line.

You must consult your local electrical agency. You could be electrocuted or seriously injured if you operate or park the lift truck too close to power cables.

In the event of high winds, do not carry out handling work that jeopardizes the stability of the lift truck and its load, particularly if the load catches the wind badly.

D - VISIBILITY

- The safety of people within the lift truck's working area, as well as that of the lift truck itself and the operator are depend on good operator visibility of the lift truck's immediate vicinity in all situations and at all times.
- This lift truck has been designed to allow good operator visibility (direct or indirect by means of rear-view mirrors) of the immediate vicinity of the lift truck while traveling with no load and with the jib in the transport position.
- Special precautions must be taken if the size of the load restricts visibility towards the front:
    - moving in reverse,
    - site layout,
    - assisted by a person directing the maneuver (while standing outside the truck's area of travel), making sure to keep this person clearly in view at all times.
    - in any case, avoid reversing over long distances.
- Certain special accessories may require the truck to travel with the jib in the raised position. In such cases, visibility on the right hand side is restricted, and special precautions must be taken:
    - site layout,
    - assisted by a person directing the maneuver (while standing outside the truck's area of travel).
- If visibility of your road is inadequate, ask someone to assist by directing the maneuver (while standing outside the truck's area of travel), making sure to keep this person clearly in view at all times.
- Keep all components affecting visibility in a clean, properly adjusted state and in good working order (e.g. windscreens, windows, windscreen wipers, windscreen washers, driving and work lights, rear-view mirrors).

https://truckmanualshub.com/

E - STARTING THE LIFT TRUCK

SAFETY INSTRUCTIONS

The lift truck must only be started up or maneuvered when the operator is sitting in the driver's cab, with his seat belt adjusted and fastened.

- Never try to start the lift truck by pushing or towing it. Such operation may cause severe damage to the transmission. If necessary, to tow the lift truck in an emergency, the transmission must be placed in the neutral position (see: 3 - MAINTENANCE: G - OCCASIONAL MAINTENANCE).
- If using an emergency battery for start-up, use a battery with the same characteristics and respect battery polarity when connecting it. Connect at first the positive terminals before the negative terminals.

Failure to respect polarity between batteries can cause serious damage to the electrical circuit. The electrolyte in the battery may produce an explosive gas. Avoid flames and generation of sparks close to the batteries. Never disconnect a battery while it is charging.

INSTRUCTIONS

- Check the closing and locking of the hood(s).
- Check that the cab door is closed.
- Check that the forward/reverse selector is in neutral.
- Turn the ignition key to the position I to activate the electrical system and the preheat.
- Whenever you switch on the lift truck, perform the automatic check on the longitudinal stability limiter and warning device system (see: 2 - DESCRIPTION: INSTRUMENTS AND CONTROLS). Do not use the lift truck if it does not conform to the regulations.
- Check the fuel level on the indicator.
- Turn the ignition key fully: the I.C. engine should then start. Release the ignition key and let the I.C. engine run at idle.
- Do not engage the starter motor for more than 15 seconds and carry out the preheating between unsuccessful attempts.
- Make sure all the signal lights on the control instrument panel are off.
- Check all control instruments when the I.C. engine is warm and at regular intervals during use, so as to quickly detect any faults and to be able to correct them without any delay.
- If an instrument does not show the correct display, stop the I.C. engine and immediately carry out the necessary operations.

F - DRIVING THE LIFT TRUCK

SAFETY INSTRUCTIONS

Operators' attention is drawn to the risks involved in using the lift truck, in particular:
- Risk of losing control.
- Risk of losing lateral and frontal stability of the lift truck.
The operator must remain in control of the lift truck.
In the event of the lift truck overturning, do not try to leave the cabin during the incident. YOUR BEST PROTECTION IS TO STAY FASTENED IN THE CABIN.

- Observe the company's traffic regulations or, by default, the public highway code.
- Do not carry out operations which exceed the capacities of your lift truck or attachments.
- Always drive the lift truck with the forks or attachment to the transport position, i.e. at 300 mm from the ground, the jib retracted and the carriage sloping backwards.
- Only carry loads which are balanced and properly anchored to avoid any risk of a load falling off.
- Ensure that palettes, cases, etc, are in good order and suitable for the load to be lifted.
- Familiarise yourself with the lift truck on the terrain where it will be used.
- Ensure that the service brakes are working properly.
- The loaded lift truck must not travel at speeds in excess of 12 km/h.
- Drive smoothly at an appropriate speed for the operating conditions (land configuration, load on the lift truck).
- Do not use the hydraulic jib controls when the lift truck is moving.
- Never change the steering mode whilst driving.
- Do not manoeuvre the lift truck with the jib in the raised position unless under exceptional circumstances and then with extreme caution, at very low speed and using gentle braking. Ensure that visibility is adequate.
- Take bends slowly.
- In all circumstances make sure you are in control of your speed.
- On damp, slippery or uneven terrain, drive slowly.
- Brake gently, never abruptly.
- Only use the lift truck's forward/reverse selector from a stationary position and never do so abruptly.
- Do not drive with your foot on the brake pedal.
- Always remember that hydrostatic type steering is extremely sensitive to movement of the steering wheel, so turn it gently and not jerkily.
- Never leave the I.C. engine on when the lift truck is unattended.
- Do not leave the cab when the lift truck has a raised load.
- Look where you are going and always make sure you have good visibility along the route.

- Use the rear-view mirrors frequently.
- Drive round obstacles.
- Never drive on the edge of a ditch or steep slope.
- It is dangerous to use two lift trucks simultaneously to handle heavy or voluminous loads, since this operation requires particular precautions to be taken. It must only be used exceptionally and after risk analysis.
- The ignition switch has an emergency stop mechanism in case of an operating anomaly occurring in the case of lift trucks not fitted with a punch-operated cut-out.

INSTRUCTIONS
- Always drive the lift truck with the forks or attachment to the transport position, i.e. at 300 mm from the ground, the jib retracted and the carriage sloping backwards.
- For lift trucks with gearboxes, use the recommended gear (see: 2 - DESCRIPTION: INSTRUMENTS AND CONTROLS).
- Select the steering mode appropriate for its use and/or working conditions (see: 2 - DESCRIPTION: INSTRUMENTS AND CONTROLS) (as model of lift truck).
- Release the parking brake.
- Shift the forward/reverse selector to the selected direction of travel and accelerate gradually until the lift truck moves off.

G - STOPPING THE LIFT TRUCK

SAFETY INSTRUCTIONS
- Never leave the ignition key in the lift truck during the operator's absence.
- When the lift truck is stationary, or if the operator has to leave his cab (even for a moment), place the forks or attachment on the ground, apply the parking brake and place the forward/reverse selector in neutral.
- Make sure that the lift truck is not stopped in any position that will interfere with the traffic flow and at less than one meter from the track of a railway.
- In the event of prolonged parking on a site, protect the lift truck from bad weather, particularly from frost (check the level of antifreeze), close and lock all the lift truck accesses (doors, windows, cowls…).

INSTRUCTIONS
- Park the lift truck on flat ground or on an incline lower than 15 %.
- Set the forward/reverse selector to neutral.
- Apply the parking brake.
- For lift trucks with gearboxes, place the gear lever in neutral.
- Retract entirely the jib.
- Lower the forks or attachment to rest on the ground.
- When using an attachment with a grab or jaws, or a bucket with hydraulic opening, close the attachment fully.
- Before stopping the lift truck after a long working period, leave the I.C. engine idling for a few moments, to allow the coolant liquid and oil to lower the temperature of the I.C. engine and transmission. Do not forget this precaution, in the event of frequent stops or warm stalling of the I.C. engine, or else the temperature of certain parts will rise significantly due to the stopping of the cooling system, with the risk of badly damaging such parts.
- Stop the I.C. engine with the ignition switch.
- Remove the ignition key.
- Lock all the accesses to the lift truck (doors, windows, cowls…).

https://truckmanualshub.com/

H - DRIVING THE LIFT TRUCK ON THE PUBLIC HIGHWAY

(or see current legislation in other countries)

SAFETY INSTRUCTIONS

- Operators driving on the public highway must comply with current highway code legislation.
- The lift truck must comply with current road legislation. If necessary, there are optional solutions. Contact your dealer.

INSTRUCTIONS

- Make sure the revolving light is in place, switch it on and verify its operation.
- Make sure the lights, indicators and windscreen wipers are working properly.
- Switch off the working headlights if the lift truck is fitted with them.
- Select the steering mode “HIGHWAY TRAFFIC” (as model of lift truck) (see: 2 - DESCRIPTION: INSTRUMENTS AND CONTROLS).
- Retract entirely the jib and put the attachment at 300 mm from the ground.
- Place the slope correctors in the central position, i.e. the transverse shaft of the axles parallel to the chassis (as model of lift truck).
- Lift up the stabilizers to the maximum and turn the blocks inwards (as model of lift truck).

Never move in neutral (forward/reverse selector or gear lever in neutral or transmission cut-off button pressed) to preserve the lift truck engine brake. Failure to respect this instruction on a slope will lead to excessive speed which may make the lift truck uncontrollable (steering, brakes) and cause serious mechanical damage.

https://truckmanualshub.com/

DRIVING THE LIFT TRUCK WITH A FRONT-MOUNTED ATTACHMENT

- You must comply with current regulations in your country, covering the possibility of driving on the public highway with a front-mounted attachment on your lift truck.
- If road legislation in your country authorizes circulation with a front-mounted attachment, you must at least:
    - Protect and report any sharp and/or dangerous edges on the attachment (see: 4 - ADAPTABLE ATTACHMENTS IN OPTION ON THE RANGE: ATTACHMENT SHIELDS).
    - The attachment must not be loaded.
    - Make sure that the attachment does not mask the lighting range of the forward lights.
    - Make sure that current legislation in your country does not require other obligations.

OPERATING THE LIFT TRUCK WITH A TRAILER

- For using a trailer, observe the regulations in force in your country (maximum travel speed, braking, maximum weight of trailer, etc.).
- Do not forget to connect the trailer's electrical equipment to that of the lift truck.
- The trailer's braking system must comply with current legislation.
- If pulling a trailer with assisted braking, the tractor lift truck must be equipped with a trailer braking mechanism. In this case, do not forget to connect the trailer braking equipment to the lift truck.
- The vertical force on the towing hook must not exceed the maximum authorised by the manufacturer (consult the manufacturer's plate on your lift truck).
- The authorised gross vehicle weight must not exceed the maximum weight authorised by the manufacturer (see: 2 - DESCRIPTION: CHARACTERISTICS).

IF NECESSARY, CONSULT YOUR DEALER.

https://truckmanualshub.com/

INSTRUCTIONS FOR HANDLING A LOAD

A - CHOICE OF ATTACHMENTS

- Only attachments approved by MANITOU can be used on its lift trucks.
- Make sure the attachment is appropriate for the work to be done (see: 4 - ADAPTABLE ATTACHMENTS IN OPTION ON THE RANGE).
- If the lift truck is equipped with the Single side-shift carriage OPTION (TSDL), use only the authorised attachments (see: 4 - ADAPTABLE ATTACHMENTS IN OPTION ON THE RANGE).
- Make sure the attachment is correctly installed and locked onto the lift truck carriage.
- Make sure that your lift truck attachments work properly.
- Comply with the load chart limits for the lift truck for the attachment used.
- Do not exceed the rated capacity of the attachment.
- Never lift a load in a sling without the attachment provided for the purpose, as the sling risks to slip (see: INSTRUCTIONS FOR HANDLING A LOAD: H - TAKING UP AND LAYING DOWN A SUSPENDED LOAD).

B - MASS OF LOAD AND CENTRE OF GRAVITY

- Before taking up a load, you must know its mass and its centre of gravity.
- The load chart for your lift truck is valid for a load in which the longitudinal position of the centre of gravity is 500 mm from the base of the forks (fig. B1). For a higher centre of gravity, contact your dealer.
- For irregular loads, determine the transverse centre of gravity before any movement (fig. B2) and set it in the longitudinal axis of the lift truck.

It is forbidden to move a load heavier than the effective capacity defined on the lift truck load chart.

For loads with a moving centre of gravity (e.g. liquids), take account of the variations in the centre of gravity in order to determine the load to be handled and be vigilant and take extra care to limit these variations as far as possible.

B1

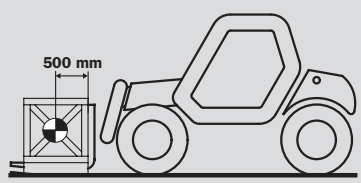

B2

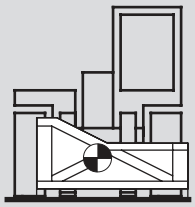

C - LONGITUDINAL STABILITY LIMITER AND WARNING DEVICE

This device gives an indication of the longitudinal stability of the lift truck, and limits hydraulic movements in order to ensure this stability, at least under the following operating conditions:

- when the lift truck is at a standstill,
- when the lift truck is on firm, stable and consolidated ground,
- when the lift truck is performing handling and placing operations.

- Move the jib very carefully when approaching the authorized load limit (see: 2 - DESCRIPTION: INSTRUMENTS AND CONTROLS).
- Always watch this device during handling operations.
- In the event that "AGGRAVATING" hydraulic movements are cut-off, only perform de-aggravating hydraulic movements in the following order (fig. C): if necessary, raise the jib (1), retract the jib as far as possible (2) and lower the jib (3) to set down the load.

The instrument reading may be erroneous when the steering is at its maximum limit or the rear axle oscillated to its limit. Before lifting a load, make sure that the lift truck is not in either of these situations.

C

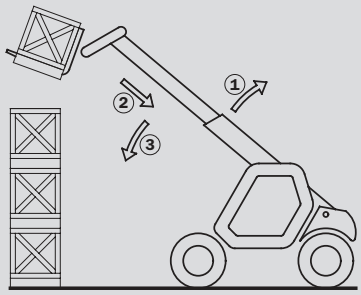

https://truckmanualshub.com/

D - TRANSVERSE ATTITUDE OF THE LIFT TRUCK

Depending on the model of lift truck

The transverse attitude is the transverse slope of the chassis with respect to the horizontal.
Raising the jib reduces the lift truck's lateral stability. The transverse attitude must be set with the jib in down position as follows:

D1

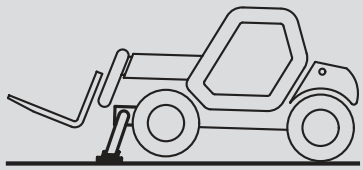

1 - LIFT TRUCK WITHOUT SLOPE CORRECTOR USED ON TYRES
- Position the lift truck so that the bubble in the level is between the two lines (see: 2 - DESCRIPTION: INSTRUMENTS AND CONTROLS).

2 - LIFT TRUCK WITH SLOPE CORRECTOR USED ON TYRES
- Correct the slope using the hydraulic control and verify the horizontality via the level. The bubble in the level must be between the two lines (see: 2 - DESCRIPTION: INSTRUMENTS AND CONTROLS).

D2

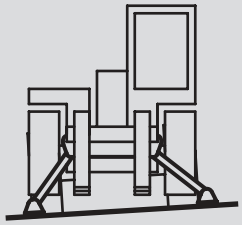

3 - LIFT TRUCK USED ON STABILIZERS
- Set the two stabilizers on the ground and raise the two front wheels of the lift truck (fig. D1).
- Correct the slope using the stabilizers (fig. D2) and make sure the truck is horizontal by checking the level. The bubble of the level must be between the two lines (see: 2 - DESCRIPTION: INSTRUMENTS AND CONTROLS). In this position, the two front wheels must be off the ground.

E - TAKING UP A LOAD ON THE GROUND

- Approach the lift truck perpendicular to the load, with the jib retracted and the forks in a horizontal position (fig. E1).
- Adjust the fork spread and centering in connection with the load (fig. E2) (optional solutions exist, consult your dealer).
- Never lift a load with a single fork.

Beware of the risks of trapping or squashing limbs when manually adjusting the forks.

- Move the lift truck forward slowly (1) and bring the forks to stop in front of the load (fig. E3), if necessary, slightly lift the jib (2) while taking up the load.
- Bring the load into the transport position.
- Tilt the load far enough backwards to ensure stability (loss of load on braking or going downhill).

E1

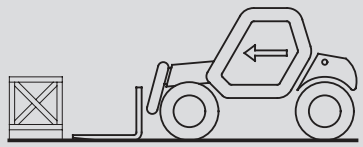

FOR A NON-PALLETIZED LOAD
- Tilt the carriage (1) forwards and move the lift truck slowly forwards (2), to insert the fork under the load (fig. E4) (block the load if necessary).
- Continue to move the lift truck forwards (2) tilting the carriage (3) (fig. E4) backwards to position the load on the forks and check the load's longitudinal and lateral stability.

E2

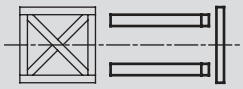

E3

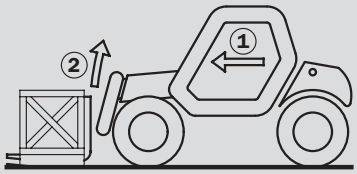

E4

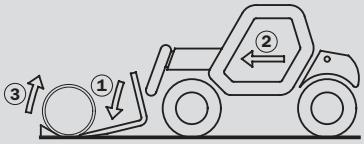

https://truckmanualshub.com/

F - TAKING UP AND LAYING A HIGH LOAD ON TIRES

You must not raise the jib if you have not checked the transverse attitude of the lift truck (see: INSTRUCTIONS FOR HANDLING A LOAD: D - TRANSVERSE ATTITUDE OF THE LIFT TRUCK).

REMINDER: Make sure that the following operations can be performed with good visibility (see: OPERATIONS INSTRUCTIONS UNLADEN AND LADEN: D - VISIBILITY).

TAKING UP A HIGH LOAD ON TIRES

- Ensure that the forks will easily pass under the load.
- Lift and extend the jib (1) (2) until the forks are level with the load, moving the lift truck (3) forward if necessary (fig. F1), moving very slowly and carefully.
- Always think about keeping the distance necessary to fit the forks under the load, between the pile and the lift truck (fig. F1) and use the shortest possible length of jib.
- Stop the forks in front of the load by alternately extending and retracting the jib (1) or, if necessary, moving the lift truck forward (2) (fig. F2). Put the handbrake on and set the forward/reverse selector to neutral.
- Slightly lift the load (1) and incline the carriage (2) backwards to stabilize the load (fig. F3).
- Tilt the load sufficiently backwards to ensure its stability.
- Watch the longitudinal stability limiter and warning device (see: INSTRUCTIONS FOR HANDLING A LOAD: C - LONGITUDINAL STABILITY LIMITER AND WARNING DEVICE). If it is overloaded, replace the load in the place from which it was taken.
- If possible lower the load without shifting the lift truck. Lift the jib (1) to release the load, retract (2) and lower the jib (3) to bring the load into the transport position (fig. F4).
- If this is not possible, back up the lift truck (1), manoeuvring very gently and carefully to release the load. Retract (2) and lower the jib (3) to bring the load into the transport position (fig. F5).

F1

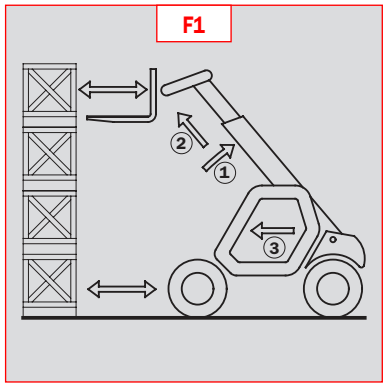

F2

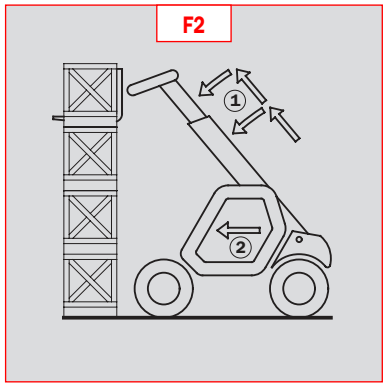

F3

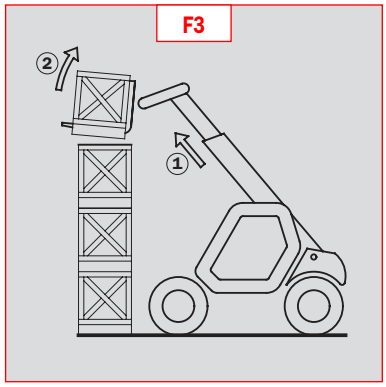

F4

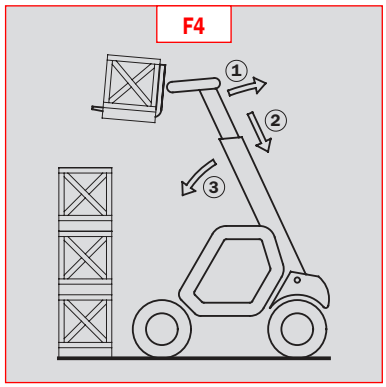

F5

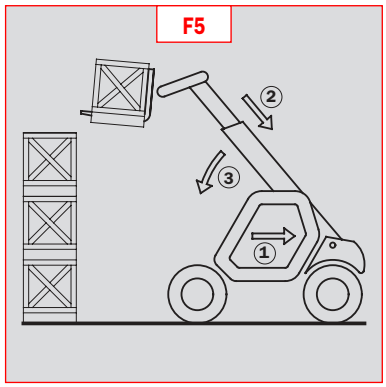

https://truckmanualshub.com/

LAYING A HIGH LOAD ON TYRES

- Approach the load in the transport position in front of the pile (fig. F6).
- Put the handbrake on and set the forward/reverse selector to neutral.
- Lift and extend the jib (1) (2) until the load is above the pile, while keeping an eye on the longitudinal stability limiter and warning device (see: INSTRUCTIONS FOR HANDLING A LOAD: C - LONGITUDINAL STABILITY LIMITER AND WARNING DEVICE). If necessary, move the lift truck (3) forward (fig. F7), driving very slowly and carefully.
- Place the load in a horizontal position and lay it down on the pile by lowering and retracting the jib (1) (2) in order to position the load correctly (fig. F8).
- If possible, release the fork by alternately retracting and raising the jib (1) (fig. F9). Then set the forks into transport position.
- If this is not possible, reverse the lift truck (1) very slowly and carefully to release the forks (fig. F10). Then set them into transport position.

F6

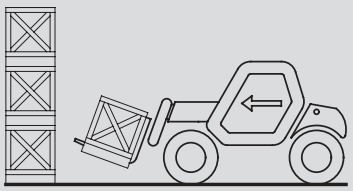

F7

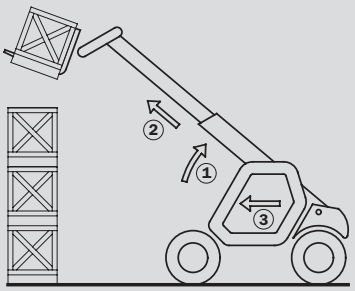

F8

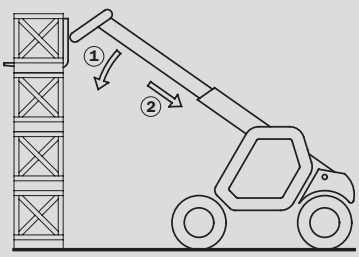

F9

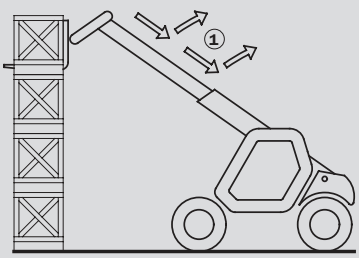

F10

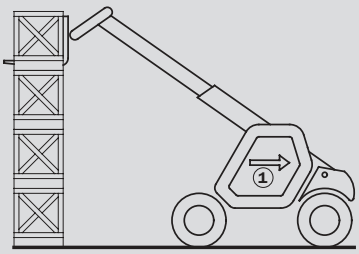

https://truckmanualshub.com/

G - TAKING UP AND LAYING A HIGH LOAD ON STABILIZERS

Depending on the model of lift truck

You must not raise the jib if you have not checked the transverse attitude of the lift truck (see: INSTRUCTIONS FOR HANDLING A LOAD: D - TRANSVERSE ATTITUDE OF THE LIFT TRUCK).

REMINDER: Make sure that the following operations can be performed with good visibility (see: OPERATIONS INSTRUCTIONS UNLADEN AND LADEN: D - VISIBILITY).

USING THE STABILIZERS

The stabilizers are used to optimise the lift truck's lifting performances (see: 2 - DESCRIPTION: INSTRUMENTS AND CONTROLS).

POSITION THE STABILIZERS WITH THE FORKS IN TRANSPORT POSITION (UNLADEN AND LADEN)

- Set the forks in transport position in front of the elevation.
- Stay far enough away to have room for the jib to be raised.
- Put the handbrake on and put the gearshift lever into neutral.
- Set the two stabilizers on the ground and lift the two front wheels of the lift truck (fig. G1), while maintaining its transverse stability.

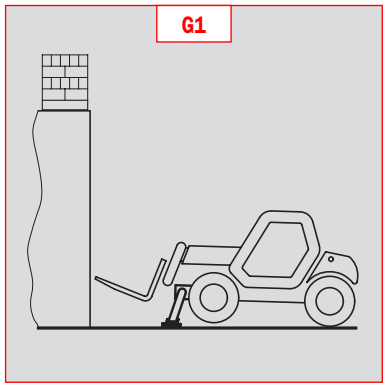

RAISE THE STABILIZERS WITH THE FORKS IN TRANSPORT POSITION (UNLADEN AND LADEN)

- Raise both stabilizers fully and at the same time.

SETTING THE STABILIZERS WITH THE JIB UP (UNLADEN AND LADEN)

This operation must be exceptional and performed with great care.

- Raise the jib and retract the telescopes completely.
- Set the lift truck in position in front of the elevation (fig. G2) moving very slowly and carefully.
- Put the handbrake on and put the gearshift lever into neutral.
- Move the stabilizers very slowly and gradually as soon as they are close to the ground or in contact with it.
- Lower the two stabilizers and lift the two front wheels of the lift truck (fig. G3). During this operation, transverse attitude must be permanently maintained: the bubble in the level must be kept between the two lines.

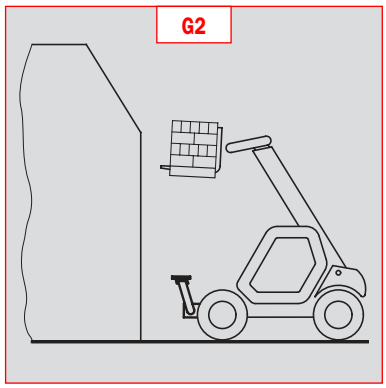

SETTING THE STABILIZERS WITH THE JIB UP (UNLADEN AND LADEN)

This operation must be exceptional and performed with great care.

- Keep the jib up and retract the telescopes completely (fig. G3).
- Move the stabilizers very slowly and gradually as soon as they are in contact with the ground and when they leave the ground. During this operation, the transverse attitude must be permanently maintained: the bubble in the level must be kept between the two lines.
- Raise both stabilizers completely.
- Release the parking brake and reverse the lift truck (1) very slowly and carefully, to release it and lower the forks (2) into transport position (fig. G4).

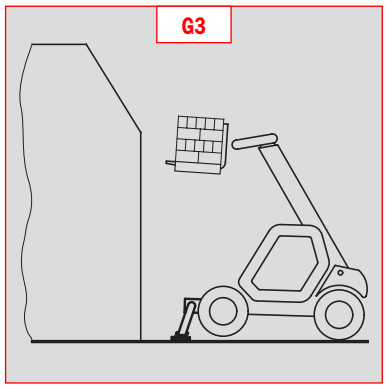

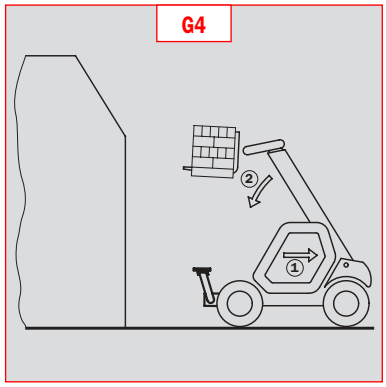

https://truckmanualshub.com/

TAKING UP A HIGH LOAD ON STABILIZERS

- Make sure the forks will fit easily under the load.
- Check the position of the lift truck with respect to the load and make a test run, if necessary, without taking the load.
- Raise and extend the jib (1) (2) until the forks are at the level of the load (fig. G5).
- Block the forks in front of the load by alternately using the controls to extend and lower the jib (1) (fig. G6).
- Lift the load slightly (1) and tilt the carriage (2) backwards to stabilise the load (fig. G7).
- Monitor the longitudinal stability limiter and warning device (see: INSTRUCTIONS FOR HANDLING A LOAD: C - LONGITUDINAL STABILITY LIMITER AND WARNING DEVICE). If it is overloaded, set the load down in the place from where it was taken.
- If possible lower the load without moving the lift truck. Raise the jib (1) to release the load, retract (2) and lower the jib (3) to set the load into transport position (fig. G8).

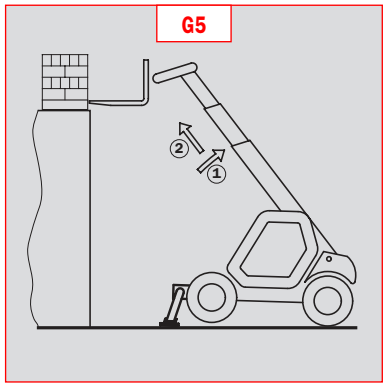

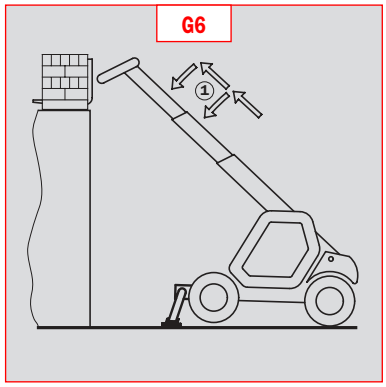

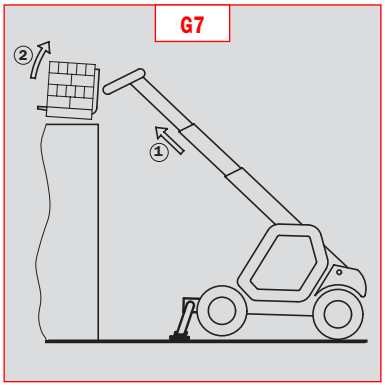

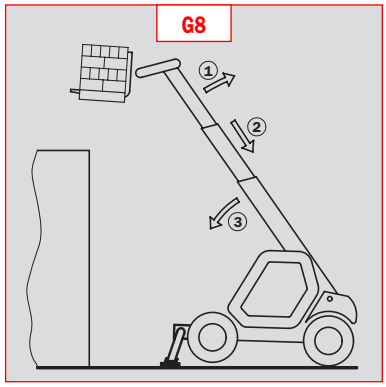

LAYING A HIGH LOAD ON STABILIZERS

- Raise and extend the jib (1) (2) until the load is above the elevation (fig. G9), while monitoring the longitudinal stability limiter and warning device (see: INSTRUCTIONS FOR HANDLING A LOAD: C - LONGITUDINAL STABILITY LIMITER AND WARNING DEVICE).
- Position the load horizontally and release it by lowering and retracting the jib (1) (2) to position the load correctly (fig. G10).
- Release the forks by alternating retracting and raising the jib (3) (fig. G11).
- If possible, set the jib in transport position without moving the lift truck.

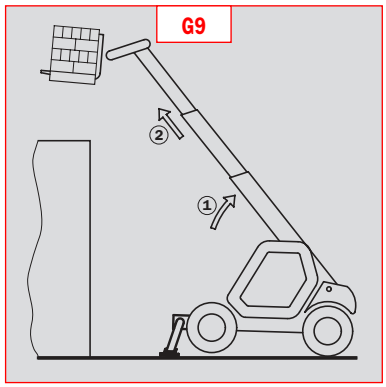

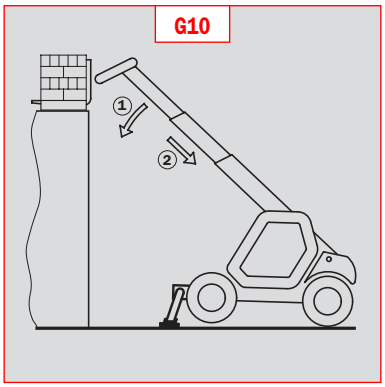

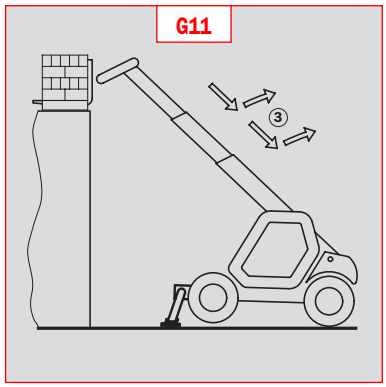

https://truckmanualshub.com/

H - TAKING UP AND LAYING DOWN A SUSPENDED LOAD

WARNING: Failure to follow the above instructions may lead the lift truck to loose stability and overturn.

MUST be used with a lift truck equipped with an operational hydraulic movement cut-out device.

CONDITIONS OF USE
- The length of the sling or the chain shall be as short as possible to limit swinging of the load.
- Lift the load vertically along its axis, never by pulling sideways or lengthways.

HANDLING WITHOUT MOVING THE LIFT TRUCK
- Whether on stabilisers or on tyres, the lateral attitude must not exceed 1 % and the longitudinal attitude must not exceed 5%, the bubble of the level must be held at “0”.
- Ensure that the wind speed is not higher than 10 m/s.
- Ensure that there is no one between the load and the lift truck.

I - TRAVELLING WITH A SUSPENDED LOAD
- Before moving, inspect the terrain in order to avoid excessive slopes and cross-falls, bumps and potholes, or soft ground.
- Ensure that the wind speed is not higher than 10 m/s.
- The lift truck must not travel at more than 0.4 m/s (1.5 km/h, i.e., one quarter walking speed).
- Drive and stop the lift truck gently and smoothly to minimise swinging of the load.
- Carry the load a few centimetres above the ground (max. 30 cm) the shortest possible jib length. Do not exceed the offset indicated on the load chart. If the load begins to swing excessively, do not hesitate to stop and lower the jib to set down the load.
- Before moving the lift truck, check the longitudinal stability limiter and warning device (see: 2 - DESCRIPTION: INSTRUMENTS AND CONTROLS), only the green LEDs and possibly the yellow LEDs should be lit.
- During transport, the lift truck operator must be assisted by a person on the ground (standing a minimum of 3 m from the load), who will limit swinging of the load using a bar or a rope. Ensure that this person is always clearly in view.
- The lateral attitude must not exceed 5%, the bubble in the level must be kept between the two “MAX.” marks
- The longitudinal attitude must not exceed 15%, with the load facing uphill, and 10%, with the load facing downhill.
- The jib angle must not exceed 45°.
- If the first red LED of the longitudinal stability limiter and warning device (see: 2 - DESCRIPTION: INSTRUMENTS AND CONTROLS) comes on while travelling, gently bring the lift truck to a stop and stabilise the load. Retract the telescope to reduce the offset of the load.

https://truckmanualshub.com/

Installation of the platform on the lift truck is only possible if the shields "operating the platform" of the lift truck and the platform are identical (see: 2 - DESCRIPTION: OPERATING THE PLATFORM).

A - AUTHORISATION FOR USE

- Operation of the platform requires further authorisation in addition to that of the lift truck.

B - SUITABILITY OF THE TRUCK FOR USE

- MANITOU has ensured that this lift truck is suitable for use under the standard operating conditions defined in this operator's manual, with a **STATIC test coefficient of 1.25** and a **DYNAMIC test coefficient of 1.1**, as specified in harmonised standard **EN 280** for "mobile elevating work platforms".
- Before commissioning, the company manager must make sure that the platform is appropriate for the work to be done, and perform certain tests (in accordance with current legislation).

C - PRECAUTIONS WHEN USING THE PLATFORM

- Wear clothes suited for operating the platform, avoid loose clothes.
- Never operate the platform when hands or feet are wet or soiled with greasy substances.
- Always pay attention when using the platform. Do not listen to the radio or music using headphones or earphones.
- For increased comfort, adopt the correct position at the platform's operator station.
- The platform's guard rail exempts the operator from wearing a safety harness under normal operating conditions. As a result, you are responsible deciding whether to wear a safety harness.
- The controls must not be used for any other than their intended purpose (e.g. getting in and out of the lift truck, coat hanger etc.).
- Safety helmets must be worn.
- The operator must always be in the normal operator's position. It is prohibited to have arms or legs, or generally any part of the body, protruding from the basket.
- Ensure that any materials loaded onto the platform (pipes, cables, containers, etc.) cannot fall out. Do not pile these materials to the point where it is necessary to step over them.

D - USING THE PLATFORM

- However experienced they may be, operators must acquaint themselves with the emplacement and operation of all control instruments prior to operating the platform.
- Check before operating that the platform has been correctly assembled and locked onto the lift truck.
- Check before operating the platform that the access gate has been properly locked.
- The platform should be operated in an area free of any obstructions or danger when it is lowered to the ground.
- The operator using the platform must be aided on the ground by a person with adequate training.
- You should stay within the limits set out in the platform load chart.
- The lateral stresses are limited pressure (see: 2 - DESCRIPTION: CHARACTERISTICS).
- It is strictly forbidden to hand a load from the platform or the lift truck jib without a specially designed attachment (see: INSTRUCTIONS FOR HANDLING A LOAD: H - TAKING UP AND LAYING DOWN A SUSPENDED LOAD).
- The platform cannot be used as a crane or a lift for permanently transporting people or materials, nor as jacks or supports.
- The lift truck must not be moved with one (or more) person(s) in the platform.
- It is forbidden to transport people on the platform using the hydraulic controls in the lift truck's driver's cab (except in case of rescue).
- The operator must not get in or out of the platform when it is not on ground level (jib retracted and in the down position).
- The platform must not be fitted with attachments that increase the unit's wind load.
- Do not use ladders or improvised structures in the platform to gain extra height.
- Do not climb onto the sides of the platform to gain extra height.

E - ENVIRONMENT

Operating the platform close to electricity cables is forbidden. Maintain the specified safe distances.

NOMINAL VOLTAGE	DISTANCE ABOVE THE GROUND OR THE FLOOR IN METRES
50 < U < 1000	2,30 M
1000 < U < 30000	2,50 M
30000 < U < 45000	2,60 M
45000 < U < 63000	2,80 M
63000 < U < 90000	3,00 M
90000 < U < 150000	3,40 M
150000 < U < 225000	4,00 M
225000 < U < 400000	5,30 M
400000 < U < 750000	7,90 M

Operation of the platform is strictly forbidden in the event of wind speeds of over 45 km/h.

- The following scale is given for an empiric evaluation of the wind speed:

BEAUFORT scale (wind speed at a height of 10 m from flat ground)						
Force	**Type of wind**	**Speed (knots)**	**Speed (kph)**	**Speed (m/s)**	**Effects on Land**	**Sea condition**
0	Calm	**0 - 1**	**0 - 1**	**< 0,3**	Smoke rises vertically.	Sea like a mirror.
1	Light air	**1 - 3**	**1 - 5**	**0,3 - 1,5**	The wind bends the smoke.	Ripples but without foam crests.
2	Light breeze	**4 - 6**	**6 - 11**	**1,6 - 3,3**	The wind can be felt on the face, shakes the leaves.	Small but evident wavelets.
3	Gentle breeze	**7 - 10**	**12 - 19**	**3,4 - 5,4**	The wind continuously shakes the leaves and twigs.	Large wavelets Perhaps scattered white horses.
4	Moderate breeze	**11 - 16**	**20 - 28**	**5,5 - 7,9**	The wind raises dust and scraps of paper, shakes the twigs.	Small waves. Fairly frequent white horses.
5	Fresh breeze	**17 - 21**	**29 - 38**	**8 - 10,7**	Leafy shrubs sway.	Small waves form on inland waters. Moderate waves, many white horses.
6	Strong breeze	**22 - 27**	**39 - 49**	**10,8 - 13,8**	Shakes thick branches, metal wires hum, it becomes difficult to keep an umbrella open.	Large waves begin to form, white foam crests, probably spray.
7	Near gale	**28 - 33**	**50 - 61**	**13,9 - 17,1**	Whole trees sway, it is difficult to walk against the wind.	Sea heaps up and white foam blown in streaks along the direction of the wind.
8	Gale	**34 - 40**	**62 - 74**	**17,2 - 20,7**	Breaks the branches of trees, it is almost impossible to walk against the wind.	Moderately high waves, crests begin to break into spindrift.
9	Strong gale	**41 - 47**	**75 - 88**	**20,8 - 24,4**	Causes slight damage to buildings (stacks, tiles, etc..).	High waves. Dense foam along the direction of the wind. Crests of waves begin to roll over. Spray may affect visibility.
10	Storm	**48 - 55**	**89 - 102**	**24,5 - 28,4**	Rare inland, uproots trees, causes considerable damage to buildings.	Very high waves with long overhanging crests. Visibility affected.
11	Violent storm	**56 - 63**	**103 - 117**	**28,5 - 32,6**	Very rare, causes extensive devastation.	Exceptionally high waves that may hide medium sized ships. Visibility affected.
12	Hurricane	**64 +**	**118 +**	**32,7 +**	Causes very serious catastrophes.	The air is filled with foam and spray. Sea completely white with driving spray. Visibility very seriously affected.

F - MAINTENANCE

Your platform must be periodically inspected to ensure its continued compliance. The inspection frequency is defined by the current legislation in the country in which the platform is used.

https://truckmanualshub.com/

HOW TO USE THE RADIO-CONTROL

SAFETY INSTRUCTIONS

- This radio-control consists of electronic and mechanical safety elements. It cannot receive commands from another transmitter because the internal encoding is unique to each radio-control.

If it is used improperly or incorrectly, there is a risk of danger to:
- The physical and mental health of the user or others.
- The lift truck and other neighbouring items.

Everyone working with this radio-control:
- Must be qualified in line with current regulations and therefore appropriately trained.
- Must follow this instruction manual as closely as possible.

- The system is used to control the lift truck remotely via radio waves. Commands are also transmitted if the lift truck is out of sight (behind an obstacle or a building for example), this is why:
  - After stopping the truck and removing the key button (only possible when it is stationary), always place the transmitter in a safe, dry place.
  - Before performing any installation, servicing or repair work, always switch off power sources (in particular, electric welding devices and electric head units on hydraulic distributors must be disconnected at each section).
  - Never remove or alter the safety devices (such as the hand-guard frame, key, emergency stop button, etc.).

Never drive the lift truck if it is not continuously and perfectly within view of the operator!

- Before leaving the transmitter, the operator must make sure that it cannot be used by an unauthorized third person: either by removing the key button from the transmitter or locking it in an inaccessible place.
- The user must ensure that the instruction manual is accessible at all times and that operators have read and understood it.

INSTRUCTIONS

- Take up position in a stable place with no risk of slipping.
- Before using the transmitter, make sure there is nobody within the working area.
- Only use the transmitter with its carrying device or installed correctly on the platform.

When you remove the transmitter, remove the accumulator and key button so that it cannot be used accidentally or deliberately by anyone else.

PROTECTIVE DEVICES

- The lift truck will be immobilised within 450 milliseconds (approx. 0.5 second) at most:
  - If the transmitter emergency stop button (50 milliseconds), or the one on the lift is pressed.
  - If the transmission distance of the radio waves is exceeded.
  - If the transmitter is faulty.
  - If an interfering radio signal is received from elsewhere.
  - If the accumulator is removed from its housing in the transmitter.
  - If the accumulator reaches the end of its autonomy.
  - If the transmitter is switched off by turning the key button to stop.
- These protective devices are provided for the safety of personnel and property and must never be altered, removed or bypassed in any way whatsoever!
- The hand-guard frame prevents external action on a manipulator (if the transmitter falls, for example, or if the operator leans on a guard-rail).
- An electronic safety device prevents radio transmission from being initiated if the manipulators are not mechanically and electrically at rest and if the internal combustion engine speed selector is not set to idle.

In an emergency, press the transmitter emergency stop button immediately ; then follow the manual's instructions (see: 2 - DESCRIPTION: INSTRUMENTS AND CONTROLS).

https://truckmanualshub.com/

MAINTENANCE INSTRUCTIONS OF THE LIFT TRUCK

GENERAL INSTRUCTIONS

- Ensure the area is sufficiently ventilated before starting the lift truck.
- Wear clothes suitable for the maintenance of the lift truck, avoid wearing jewellery and loose clothes. Tie and protect your hair, if necessary.
- Stop the I.C. engine and remove the ignition key, when an intervention is necessary.
- Read the operator's manual carefully.
- Carry out all repairs immediately, even if the repairs concerned are minor.
- Repair all leaks immediately, even if the leak concerned is minor.
- Make sure that the disposal of process materials and of spare parts is carried out in total safety and in a ecological way.
- Be careful of the risk of burning and splashing (exhaust, radiator, I.C. engine, etc.).

MAINTENANCE

- Perform the periodic service (see: 3 - MAINTENANCE) to keep your lift truck in good working conditions. Failure to perform the periodic service may cancel the contractual guarantee.

MAINTENANCE LOGBOOK

- The maintenance operations carried out in accordance with the recommendations given in part: 3 - MAINTENANCE and the other inspection, servicing or repair operations or modifications performed on the lift truck or its attachments shall be recorded in a maintenance logbook. The entry for each operation shall include details of the date of the works, the names of the individuals or companies having performed them, the type of operation and its frequency, if applicable. The part numbers of any lift truck items replaced shall also be indicated.

LUBRICANT AND FUEL LEVELS

- Use the recommended lubricants (never use contaminated lubricants).
- Do not fill the fuel tank when the I.C. engine is running.
- Only fill up the fuel tank in areas specified for this purpose.
- Do not fill the fuel tank to the maximum level.
- Do not smoke or approach the lift truck with a flame, when the fuel tank is open or is being filled.

HYDRAULIC

- Any work on the load handling hydraulic circuit is forbidden except for the operations described in part: 3 - MAINTENANCE.
- Do not attempt to loosen unions, hoses or any hydraulic component with the circuit under pressure.

BALANCING VALVE: It is dangerous to change the setting and remove the balancing valves or safety valves which may be fitted to your lift truck cylinders. These operations must only be performed by approved personnel (consult your dealer).

The HYDRAULIC ACCUMULATORS that may be fitted on your lift truck are pressurized units. Removing these accumulators and their pipework is a dangerous operation and must only be performed by approved personnel (consult your dealer).

ELECTRICITY

- Do not short-circuit the starter relay to start the IC engine. If the forward/reverse selector is not in neutral and the parking brake is not engaged, the lift truck may suddenly start to move.
- Do not drop metallic items on the battery.
- Disconnect the battery before working on the electrical circuit.

https://truckmanualshub.com/

WELDING

- Disconnect the battery before any welding operations on the lift truck.
- When carrying out electric welding work on the lift truck, connect the negative cable from the equipment directly to the part being welded, so as to avoid high tension current passing through the alternator.
- Never carry out welding or work which gives off heat on an assembled tyre. The heat would increase the pressure which could cause the tyre to explode.
- If the lift truck is equipped with an electronic control unit, disconnect this before starting to weld, to avoid the risk of causing irreparable damage to electronic components.

WASHING THE LIFT TRUCK

- Clean the lift truck or at least the area concerned before any intervention.
- Remember to close and lock all accesses to the lift truck (doors, windows, cowls…).
- During washing, avoid the articulations and electrical components and connections.
- If necessary, protect against penetration of water, steam or cleaning agents, components susceptible of being damaged, particularly electrical components and connections and the injection pump.
- Clean the lift truck of any fuel, oil or grease trace.

FOR ANY INTERVENTION OTHER THAN REGULAR MAINTENANCE, CONSULT YOUR DEALER.

https://truckmanualshub.com/

IF THE LIFT TRUCK IS NOT TO BE USED FOR A LONG TIME

INTRODUCTION

The following recommendations are intended to prevent the lift truck from being damaged when it is withdrawn from service for an extended period.
For these operations, we recommend the use of a MANITOU protective product, reference 603726.
Instructions for using the product are given on the packaging.

Procedures to follow if the lift truck is not to be used for a long time and for starting it up again afterwards must be performed by your dealership.

PREPARING THE LIFT TRUCK

- Clean the lift truck thoroughly.
- Check and repair any leakage of fuel, oil, water or air.
- Replace or repair any worn or damaged parts.
- Wash the painted surfaces of the lift truck in clear and cold water and wipe them.
- Touch up the paintwork if necessary.
- Shut down the lift truck (see: OPERATING INSTRUCTIONS UNLADEN AND LADEN).
- Make sure the jib cylinder rods are all in retracted position.
- Release the pressure in the hydraulic circuits.

PROTECTING THE I.C. ENGINE

- Fill the tank with fuel (see: 3 - MAINTENANCE: A - DAILY OR EVERY 10 HOURS SERVICE).
- Empty and replace the cooling liquid (see: 3 - MAINTENANCE: F - EVERY 2000 HOURS SERVICE).
- Leave the I.C. engine running at idling speed for a few minutes, then switch off.
- Replace the I.C. engine oil and oil filter (see: 3 - MAINTENANCE: D - EVERY 500 HOURS SERVICE).
- Add the protective product to the engine oil.
- Run the I.C. engine for a short time so that the oil and cooling liquid circulate inside.
- Disconnect the battery and store it in a safe place away from the cold, after charging it to a maximum.
- Remove the injectors and spray the protective product into each cylinder for two seconds with the piston in low neutral position.
- Turn the crankshaft once slowly and refit the injectors (see I.C. engine REPAIR MANUAL).
- Remove the intake hose from the manifold or turbocharger and spray the protective product into the manifold or turbocharger.
- Cap the intake manifold or turbocharger hole with waterproof adhesive tape.
- Remove the exhaust pipe and spray the protective product into the exhaust manifold or turbocharger.
- Refit the exhaust pipe and block the outlet with waterproof adhesive tape.

NOTE: The spray time is noted on the product packaging and must be increased by 50 % for turbo engines.

- Open the filler plug, spray the protective product around the rocker arm shaft and refit the filler plug.
- Cap the fuel tank using waterproof adhesive tape.
- Remove the drive belts and store them in a safe place.
- Disconnect the engine cut-off solenoid on the injection pump and carefully insulate the connection.

PROTECTING THE LIFT TRUCK

- Set the lift truck on axle stands so that the tyres are not in contact with the ground and release the handbrake.
- Protect cylinder rods which will not be retracted, from corrosion.
- Wrap the tyres.

NOTE: If the lift truck is to be stored outdoors, cover it with a waterproof tarpaulin.

https://truckmanualshub.com/

BRINGING THE LIFT TRUCK BACK INTO SERVICE

- Remove the waterproof adhesive tape from all the holes.
- Refit the intake hose.
- Refit and reconnect the battery.
- Remove the protection from the cylinder rods.
- Perform the daily service (see: 3 - MAINTENANCE: A - DAILY OR EVERY 10 HOURS SERVICE).
- Put the handbrake on and remove the axle stands.
- Empty and replace the fuel and replace the fuel filter (see: 3 - MAINTENANCE: D - EVERY 500 HOURS SERVICE).
- Refit and set the tension in the drive belts (see: 3 - MAINTENANCE: C - EVERY 250 HOURS SERVICE).
- Turn the I.C. engine using the starter, to allow the oil pressure to rise.
- Reconnect the engine cut-off solenoid.
- Lubricate the lift truck completely (see: 3 - MAINTENANCE: SERVICING SCHEDULE).

Make sure the area is adequately ventilated before starting up the lift truck.

- Start up the lift truck, following the safety instructions and regulations (see: OPERATING INSTRUCTIONS UNLADEN AND LADEN).
- Run all the jib's hydraulic movements, concentrating on the ends of travel for each cylinder.

https://truckmanualshub.com/

https://truckmanualshub.com/

2 - DESCRIPTION

https://truckmanualshub.com/

https://truckmanualshub.com/

TABLE OF CONTENTS

IDENTIFICATION OF THE LIFT TRUCK 2-6

CHARACTERISTICS 2-8

FRONT AND REAR TIRES 2-10

DIMENSIONS AND LOAD CHART 2-12

INSTRUMENTS AND CONTROLS 2-14

TOWING PIN AND HOOK 2-30

DESCRIPTION AND USE OF THE OPTIONS 2-32

https://truckmanualshub.com/

IDENTIFICATION OF THE LIFT TRUCK

As our policy is to promote a constant improvement of our products, our range of telescopic lift trucks may undergo certain modifications, without obligation for us to advise our customers.

When you order parts, or when you require any technical information, always specify:

NOTE: For the owner's convenience, it is recommended that a note of these numbers is made in the spaces provided, at the time of the delivery of the lift truck.

LIFT TRUCK MANUFACTURER'S PLATE (FIG. A)

- Model .....
- Series .....
- Serial Nr .....
- Year of manufacture .....

For any further technical information regarding your lift truck refer to chapter: 2 - DESCRIPTION: CHARACTERISTICS.

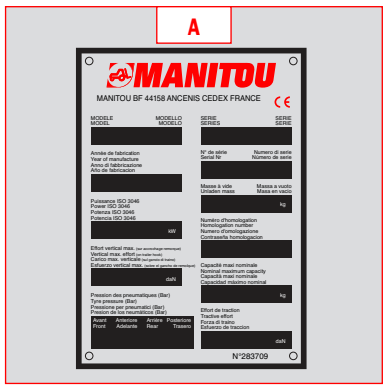

I.C. ENGINE (FIG. B)

- Model .....
- Serial Nr .....
- I.C. engine Nr .....

HYDROSTATIC PUMP (FIG. C)

- MANITOU reference .....
- Type of codification .....
- Serial Nr .....
- Manufacturer's Nr .....
- Year of manufacture .....

HYDROSTATIC MOTOR (FIG. D)

- MANITOU reference .....
- Type of codification .....
- Serial Nr .....
- Manufacturer's Nr .....
- Year of manufacture .....

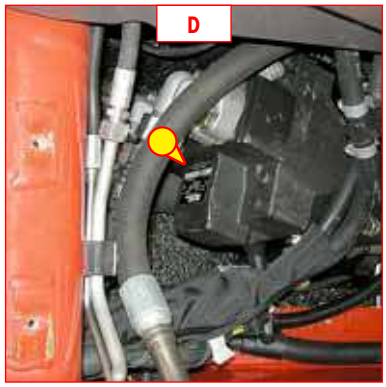

https://truckmanualshub.com/

FRONT AXLE (FIG. E)

- Type .....
- Serial Nr .....
- MANITOU reference .....

REAR AXLE (FIG. F)

- Type .....
- Serial Nr .....
- MANITOU reference .....

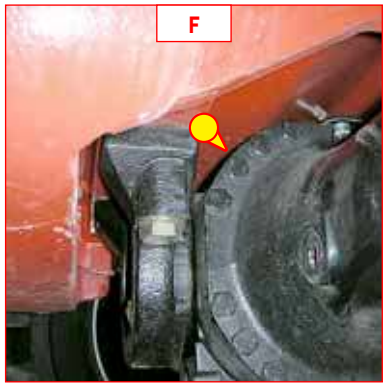

CAB (FIG. G)

- Type .....
- Serial Nr .....

JIB (FIG. H)

- MANITOU reference .....
- Date of manufacture .....

PLATE MANUFACTURER OF THE ATTACHMENT (FIG. I)

- Model .....
- Serial Nr .....
- Year of manufacture .....

https://truckmanualshub.com/

CHARACTERISTICS

I.C. ENGINE		
Type		KUBOTA V3307
Fuel		Diesel
Number of cylinders		4 in line
Suction		Supercharged
Injection system		Direct
Ignition sequence		1.3.4.2
Capacity	cm3 (cu/in)	3331 (203.3)
Bore and stroke	mm (in)	94 x 120 (3.7 x 4.7)
Compression ratio		20
Nominal rating loaded	rpm	2600
Rating slow unladen	rpm	895
Max. rating unladen	rpm	2800
Power ISO 3046-1	cv- kW	75 - 55,4
Power SAE J 1995	cv- kW	75 - 55,4
Maximum torque ISO 3046-1	N.m	265 to 1400 rpm
Air cleaner	µm	3
Type of cooling		By water
Fan		Puller

TRANSMISSION		
Hydrostatic pump		DANFOSS
Type		Variable displacement piston
Forward/reverse selector		Electro-hydraulic
Number of forward speeds		2 (1 low and 1 high)
Number of reverse speeds		2 (1 low and 1 high)
Main pump		
MAX./MIN. displacement	cm3/rev	0 - 45
MAX. flow rate	l/mn (gl/mn)	117 (30.9)
Working pressure	bar (psi)	400 (5802)
Boost pump		
Capacity	cm3/rev	12
MAX. flow rate	l/mn (gl/mn)	31 (8)
Boost pressure MAX. R.P.M.	bar (psi)	24 (348) (transmission in neutral)
Hydrostatic motor		DANFOSS
Type		Variable displacement piston
MAX./MIN. displacement	cm3/rev	23 - 80
Gear box		DANA
Front axle		DANA
Differential		45 % limited slip differential
Rear axle		DANA
Differential		Without locking
Drive wheels		4RM Permanent
Switch for 2/4 drive wheels		No
Front tyres		DUNLOP
Size		12.0-18 12PR T86 Stabilarge TUBELESS
Pressure	bar (psi)	4,2 (61)
Rear tyres		DUNLOP
Size		12.0-18 12PR T86 Stabilarge TUBELESS
Pressure	bar (psi)	4,2 (61)

ELECTRIC CIRCUIT		
Battery	Standard	12 V - 110 Ah - 750 A EN
	Option	- - - - - -
Alternator		12 V - 80 A
Type		A5TA59 77B
Starter		12 V - 3 kW
Type		M008T50671

SOUND AND VIBRATION		
Level of sound pressure in the driver's cab LpA (according to standard NF EN 12053)	dB	76 (cab closed)
Level of sound power ensured in the LwA environment (according to directive 2000/14/EC modified by directive 2005/88/EC)	dB	104 (measured) 104 (ensured)
Average weighted acceleration on driver's body (according to standard NF EN 13059)	m/s2	
The average weighted acceleration transmitted to the driver's hand/arm system (according to standard ISO 5349-2)	m/s2(ft/s2)	< 2,5 (< 8.2)

https://truckmanualshub.com/

BRAKE CIRCUIT		
Service brake		Non-servo hydraulic brake
Type of brake		Multidisk brake immersed in oil
Type of control		By foot on front axle
Parking brake		Low pressure hydraulic brake
Type of brake		Multidisc brake immersed in oil
Type of control		Switch-operated electro-hydraulic

HYDRAULIC CIRCUIT			
Hydraulic pump			
Type		Double gear	
		1st chamber	2nd chamber
Capacity	cm3 (cu/in)	31 (1.9)	11 (.67)
Max. rating capacity unladen	l/mn (gl/mn)	86 (23)	31 (8)
Flow rate at 1600 rpm	l/mn (gl/mn)	49 (13)	18 (5)
Filtration			
Return	µm	10	10
Suction	µm	125	125
Maximum service pressure	bar (psi)	235 (3408)	
Telescoping circuit	bar (psi)	235 / 235 (3408)	
Lifting circuit	bar (psi)	235 / 235 (3408)	
Tilt circuit	bar (psi)	245 / 245 (3553)	
Attachment circuit	bar (psi)	235 (3408)	
Steering circuit	bar (psi)	140 (2031)	

HYDRAULIC MOVEMENTS		
Longitudinal stability limiter and warning device		Electronic
Lifting motions (jib retracted)		
Unladen lifting	s - m/mn	7,3 - 32,1
Laden lifting	s - m/mn	7,45 - 31,4
Unladen lowering	s - m/mn	4,95 - 47,3
Laden lowering	s - m/mn	5 - 46,8
Telescoping motions (jib raised)		
Unladen extending	s - m/mn	5,2 - 24,8
Laden extending	s - m/mn	5,3 - 25,3
Unladen retracting	s - m/mn	3,7 - 35,5
Laden retracting	s - m/mn	3,75 - 35
Tilting movements		
Unladen digging	s - °/s	3,2 - 40,1
Forward tilting unladen	s - °/s	3,2 - 40,1

SPECIFICATIONS AND WEIGHTS			
Speed of movement for lift truck in standard configuration on flat ground (except particular conditions)			
Front unladen	1 low	km/h (mph)	9 (5.6)
	1 high	km/h (mph)	25 (15.5)
Rear unladen	1 low	km/h (mph)	9 (5.6)
	1 high	km/h (mph)	25 (15.5)
Standard attachment			PFB 25 N MT 1020
Weight of attachment (without forks)		kg (lbs)	80 (176)
Weight of forks (each one)		kg (lbs)	76 (168)
Rated capacity with standard attachment		kg (lbs)	2500 (5512)
Tipping load at maximum reach on tyres		kg	
Distance from the centre of gravity from the load to the lug of the forks		Mm (in)	500 (20)
Standard lifting height		Mm (in)	5900 (232)
Lift truck weight without attachment		kg (lbs)	4690 (10340)
Lift truck weight with standard attachment			
Unladen		kg (lbs)	4922 (10851)
At rated load		kg (lbs)	7422 (16363)
Weight per axle with standard attachment (transport position)			
Front unladen		kg (lbs)	2362 (5207)
Rear unladen		kg (lbs)	2560 (5644)
Front rated load		kg (lbs)	6622 (14599)
Rear rated load		kg (lbs)	800 (1764)
Weight per axle with standard attachment (jib extended)			
Front rated load		kg (lbs)	5212 (11490)
Rear rated load		kg (lbs)	510 (1124)
Authorised gross vehicle weight		daN (lbf)	21000 (47210)
Drag strain on the coupling hook			
Unladen (sliding)		daN	
At rated load (transmission setting)		daN	
Pull strain with open carrier (according to standard ISO 8313)		daN (lbf)	4205 (945)

FRONT AND REAR TIRES

		PRESSURE bar(psi)	TYRE LOAD kg(lbs)			
			FRONT UNLADEN	FRONT LADEN	REAR UNLADEN	REAR LADEN
DUNLOP	12.0-18 12PR T86 Stabilarge TUBELESS	4,2(61)	1200(2646)	3300(7275)	1300(2866)	400(882)
GOODYEAR	12.5/80-18 SGI 14PR 134A6 TUBELESS	4,9(71)				
MICHELIN	280/80R20 133A8 133B XMCL TUBELESS	4,4(64)				

		PRESSURE (bar(psi)	LOADkg(lb)	PRESSURE ON THE CONTACT SURFACE kg/cm2 (lbs/in2)		AREA OF THE CONTACT SURFACE cm2 (in2)	
				HARD SOIL	LOOSE SOIL	HARD SOIL	LOOSE SOIL
DUNLOP	12.0-18 12PR T86 Stabilarge TUBELESS	4,2(61)	400	5,79(82)	1,88(27)	69(11)	214(33)
			1200	7,79(110)	2,50(36)	154(24)	480(74)
			1300	8,13(116)	2,60(37)	160(25)	500(78)
			3300	11,05(157)	3,80(54)	299(46)	869(135)
GOODYEAR	12.5/80-18 SGI 14PR 134A6 TUBELESS	4,9(71)	400				
			1200				
			1300				
			3300				
MICHELIN	280/80R20 133A8 133B XMCL TUBELESS	4,4(64)	400				
			1200				
			1300				
			3300				

https://truckmanualshub.com/

DIMENSIONS AND LOAD CHART

A	mm(in)	1200(47.2)
B	mm(in)	2300(90.6)
C	mm(in)	991(39)
C1	mm(in)	928(36.5)
D	mm(in)	3894(153.3)
D1	mm(in)	3831(150.8)
D2	mm(in)	3393(133.6)
E	mm(in)	5094(200.6)
F	mm(in)	1500(59)
F1	mm(in)	1500(59)
G	mm(in)	318(12.5)
G1	mm(in)	378(14.9)
G2	mm(in)	322(12.7)
I	mm(in)	603(23.7)
J	mm(in)	797(31.4)
K	mm(in)	1015(40)
L	mm(in)	45(1.8)
N	mm(in)	1398(55)
O	mm(in)	125(4.9)
P2	(°)	45
P3	(°)	65
R	mm(in)	3033(119.4)
S	mm(in)	6531(257.1)
T	mm(in)	3475(136.8)
U1	mm(in)	2000(78.7)
U2	mm(in)	2167(85.3)
V	mm(in)	4240(166.9)
V1	mm(in)	765(30.1)
V2	mm(in)	3190(125.6)
W	mm(in)	1814(71.4)
Y	(°)	12
Z	(°)	117

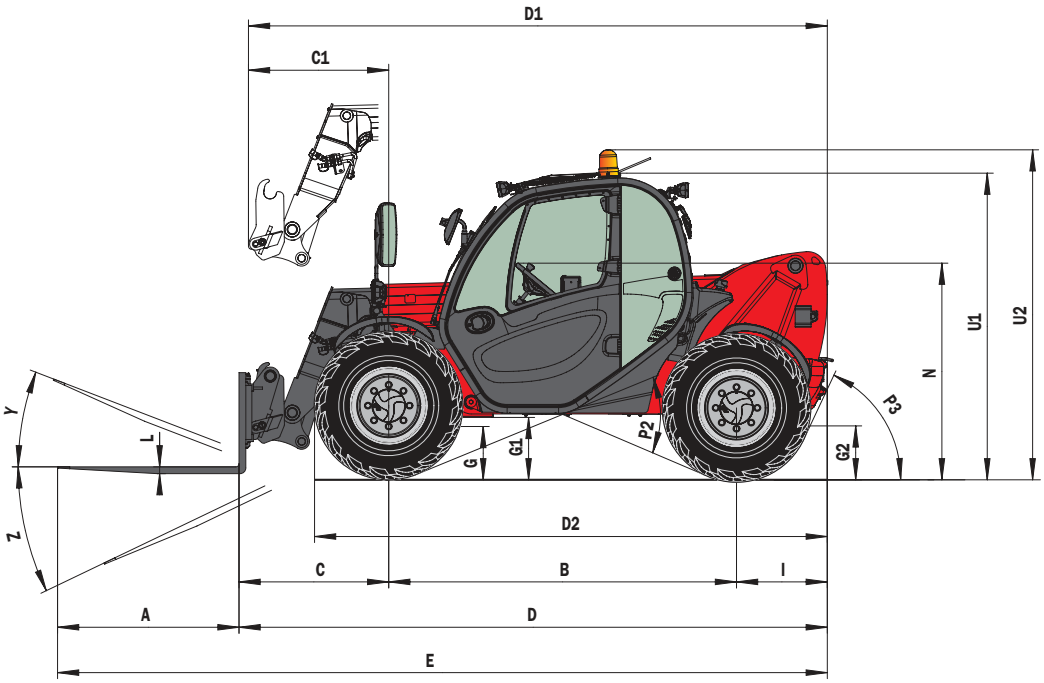

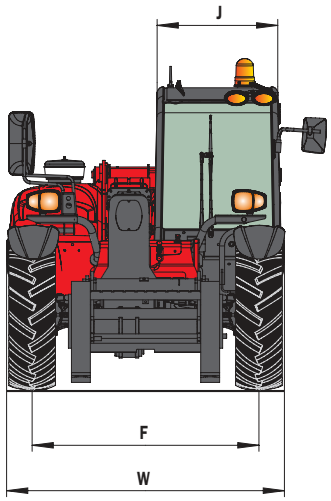

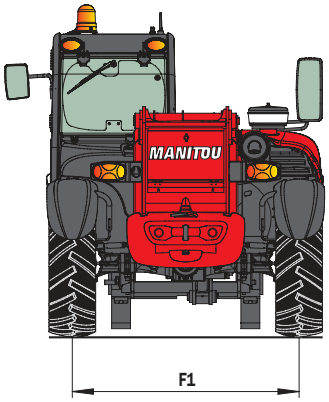

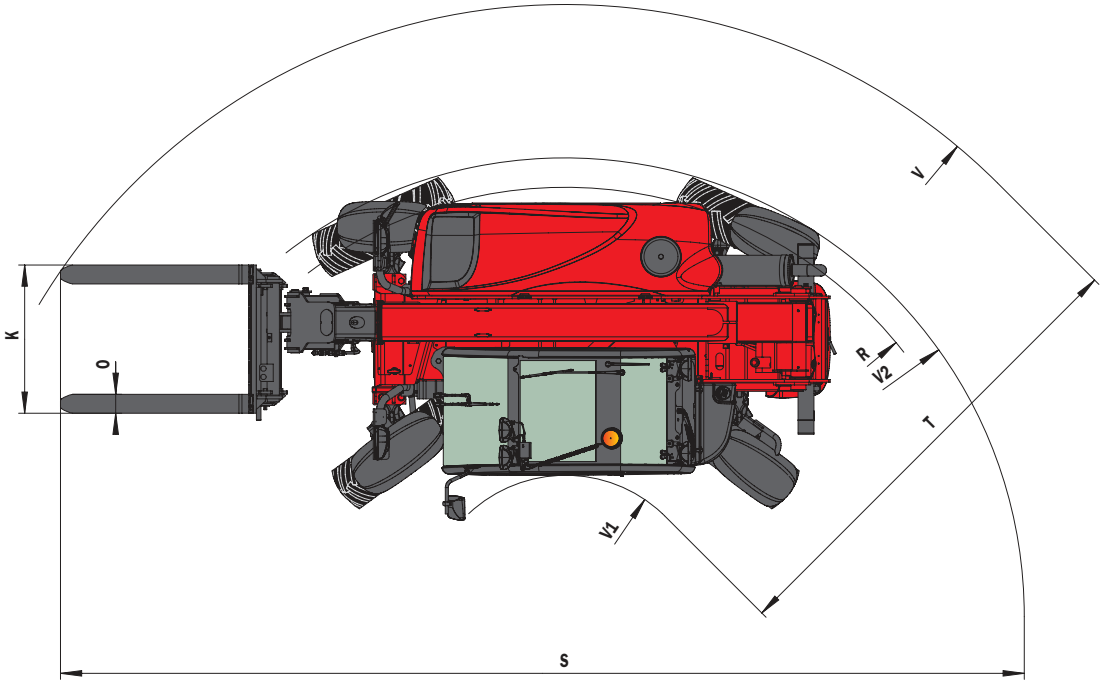

https://truckmanualshub.com/

MLT625-USA

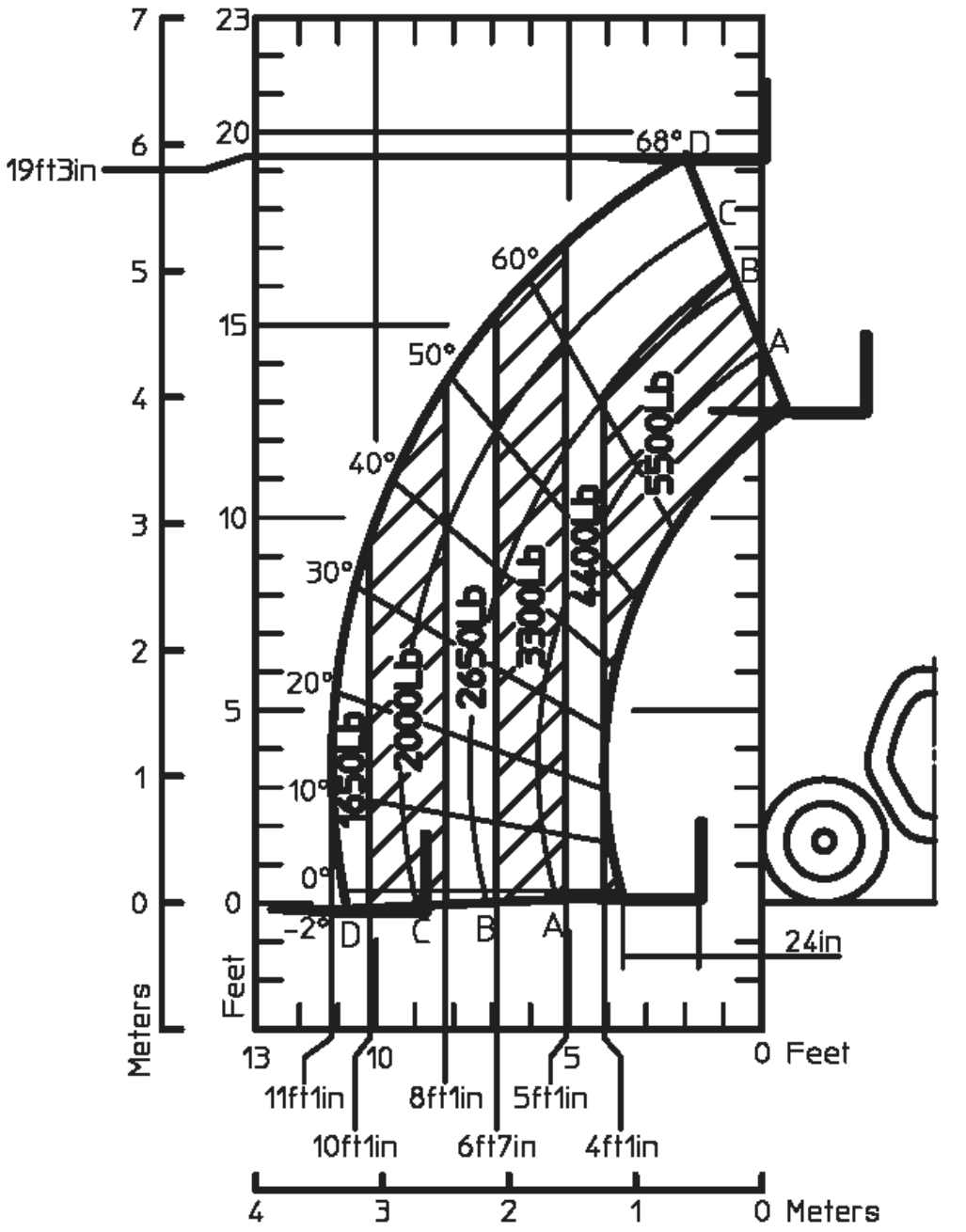

An American national standard ASME B56-6-2002

INSTRUMENTS AND CONTROLS

https://truckmanualshub.com/

DESCRIPTION

1 - DRIVER'S SEAT
2 - SAFETY BELT
3 - IGNITION SWITCH
4 - EMERGENCY STOP BUTTON
5 - BATTERY CUT-OFF
6 - MAN-MACHINE INTERFACE (MMI)
    6A- CONTROL PANEL
    6B - SCREEN DISPLAY
7 - SWITCHES
8 - ARMREST AND STORAGE
9 - FUSES AND RELAYS IN THE CAB
10 - FUSES AND RELAYS UNDER THE ENGINE HOOD
11 - CIGAR LIGHTER
12 - LIGHT SWITCH, HORN AND INDICATOR SWITCH
13 - FRONT AND REAR WINDSCREEN WIPER SWITCH
14 - FUNCTION FILES
15 - HYDRAULIC CONTROLS
16 - ACCELERATOR PEDAL
17 - SERVICE BRAKE PEDAL AND TRANSMISSION CUT-OFF
18 - FORWARD/NEUTRAL/REVERSE GEAR SELECTION
19 - STEERING SELECTION
20 - HEATER CONTROL
20 - AIR CONDITIONING CONTROLS (OPTION AIR CONDITIONING)
21 - HEATING VENTS
22 - WINDSCREEN DEMISTER VENTS
23 - LEVEL INDICATOR
24 - DOOR LOCK
25 - DOOR WINDOW OPENING HANDLE
26 - DOOR WINDOW RELEASE BUTTON
27 - HANDLE FOR REAR WINDOW OPENING
28 - STEERING WHEEL ADJUSTMENT LEVER
29 - DOCUMENT HOLDER NET
30 - REAR STORAGE SPACE
31 - FRONT LIGHTS (NOT ILLUSTRATED)
32 - REAR LIGHTS (NOT ILLUSTRATED)
33 - REVOLVING LIGHT
34 - ROOF LIGHT
35 - ROOF SCREENWIPER SWITCH
36 - SUN VISOR
37 - DIAGNOSTIC CONNECTOR

NOTE: All the terms such as: RIGHT, LEFT, FRONT, REAR are meant for an observer seated on driver's seat and looking in front of him.

https://truckmanualshub.com/

1 - DRIVER'S SEAT (STANDARD)

DESIGNED FOR MAXIMUM COMFORT, THIS SEAT CAN BE ADJUSTED AS FOLLOWS.

WEIGHT ADJUSTMENT (FIG. A)

Adjust the weight when the driver is sitting on the seat.

- Pull the weight adjustment lever 1 fully out.
- Move the weight adjustment lever 1 up to increase the weight or down to reduce it.
- There are ten possible positions between the min and max weights. Before each run, return the lever to the central position. The max. or min. position is indicated by a freely travelling lever.
- The driver's weight is correctly adjusted when the jib is in the centre of indicator 2.
- After completing weight adjustment, fully lower the lever 1.

NOTE: To avoid any health problems, it is recommended that the weight should be checked and adjusted before starting up the lift truck.

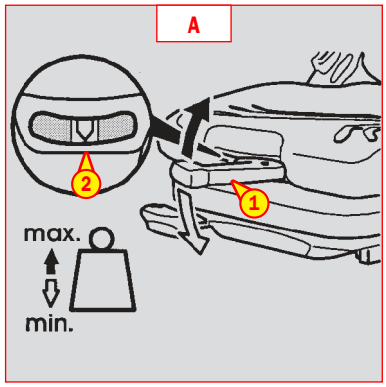

LONGITUDINAL ADJUSTMENT (FIG. B)

- Adjust the locking lever until you reach the position required. This then locks and the seat will not shift into another position.

Only operate the lever by its recessed section and do not grasp from below, at the risk of crushing the hand.

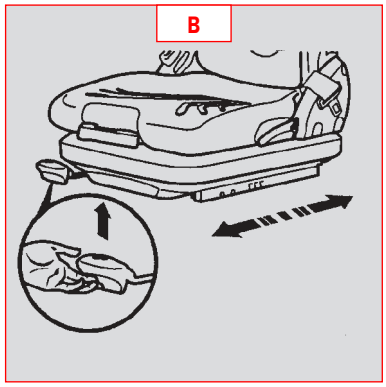

LUMBAR ADJUSTMENT (FIG. C)

This increases the comfort of the seat and the driver's freedom of movement.

- Turn the knob to 1 to adjust the height and depth of the lumbar support of the upper part of the back-rest.
- Turn the knob to 2 to adjust the height and depth of the lumbar support of the lower part of the back-rest.

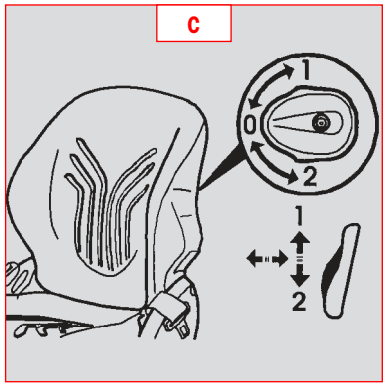

ANGLE ADJUSTMENT OF THE BACK-REST (FIG. D)

- Support the back-rest, pull the lever and position the back-rest to find the desired position.

If you do not support the back-rest when making adjustments, it will swing forwards.

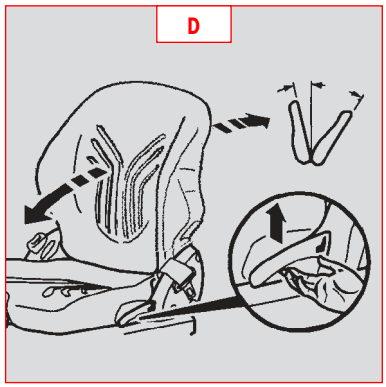

MAINTENANCE

Dirt may adversely affect the correct functioning of the seat. For this reason, make sure your seat is always clean.

- The cushions do not require to be removed from the seat frame for cleaning.

A rocking head-rest increases the risk of an accident!

First check the resistance of the fabric on a small concealed area before using any fabric and plastic cleaner.

https://truckmanualshub.com/

1 - PNEUMATIC DRIVER'S SEAT (OPTION)

DESIGNED FOR MAXIMUM COMFORT, THIS SEAT CAN BE ADJUSTED AS FOLLOWS.

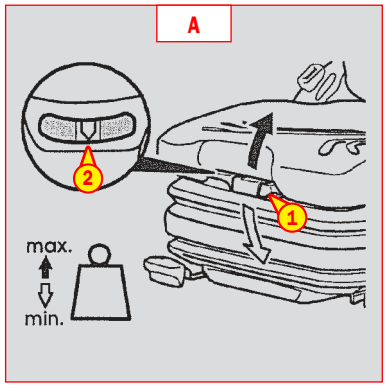

WEIGHT AND SEAT HEIGHT ADJUSTMENT (FIG. A)

Adjust the weight when the driver is sitting on the seat.
- Switch on lift truck ignition.
- Move the weight adjustment lever 1 up to increase the weight or down to reduce it.
- The min and max weight can be set by engaging the upper or lower limit switch.
- The driver's weight is correctly adjusted when the jib is in the centre of indicator 2.
- The seat height can be adjusted within this zone.

NOTE: To avoid any health problems, it is recommended that the weight should be checked and adjusted before starting up the lift truck.

To avoid causing any damage, do not activate the compressor for over 1 minute.

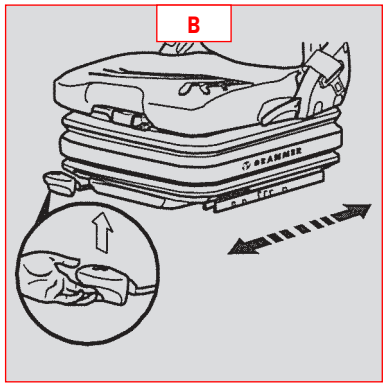

LONGITUDINAL ADJUSTMENT (FIG. B)

- Adjust the locking lever until you reach the position required. This then locks and the seat will not shift into another position.

Only operate the lever by its recessed section and do not grasp from below, at the risk of crushing the hand.

LUMBAR ADJUSTMENT (FIG. C)

This increases the comfort of the seat and the driver's freedom of movement.
- Turn the knob to 1 to adjust the height and depth of the lumbar support of the upper part of the back-rest.
- Turn the knob to 2 to adjust the height and depth of the lumbar support of the lower part of the back-rest.

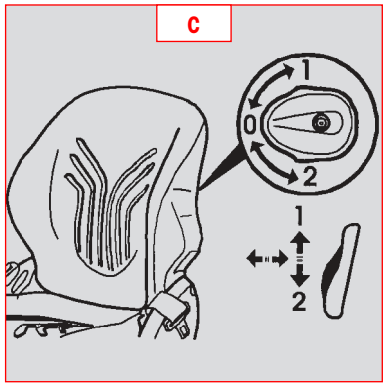

ANGLE ADJUSTMENT OF THE BACK-REST (FIG. D)

- Support the back-rest, pull the lever and position the back-rest to find the desired position.

If you do not support the back-rest when making adjustments, it will swing forwards.

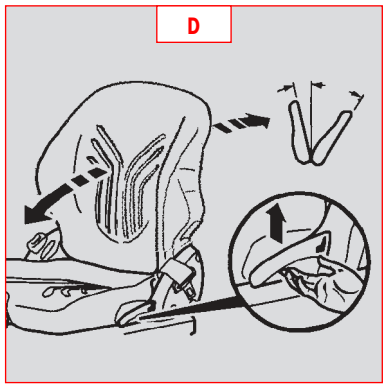

MAINTENANCE

Dirt may adversely affect the correct functioning of the seat. For this reason, make sure your seat is always clean.
- The cushions do not require to be removed from the seat frame for cleaning.

A rocking head-rest increases the risk of an accident!

First check the resistance of the fabric on a small concealed area before using any fabric and plastic cleaner.

https://truckmanualshub.com/

2 - SAFETY BELT

- Sit correctly on the seat.
- Check that seat belt is not twisted.
- Place the seat belt at hip level.
- Attach the seat belt and check that it locks.
- Adjust the seat belt to your body shape without squeezing your hip and without over-slack.

In no event should the lift truck be used if the seat belt is defective (fixing, locking, cuts, tears, etc.). Repair or replace the seat belt immediately.

3 - IGNITION SWITCH

The key switch has five positions:

P - Ignition off, parking position.
O - Ignition switched off and I.C. engine stopped.
I - Ignition on.
II - Heating.
III - The I.C. engine starts, return to position I as soon as the key is released.

4 - EMERGENCY STOP BUTTON

- In the event of danger, it lets you stop the I.C. Engine and thereby cut out all hydraulic movements.
- Pull the button to disable it before restarting the lift truck.

Be ready for hydraulic movements suddenly stopping when you press this button.

Warning, when driving, the lift truck will be brought to a sudden stop. If possible, stop the lift truck before using the emergency stop.

5 - BATTERY CUT-OFF

- For quickly disconnecting the battery when working on the electric circuit or when soldering, for example.

6 - MAN-MACHINE INTERFACE (MMI)

6A - CONTROL PANEL
6B - SCREEN DISPLAY

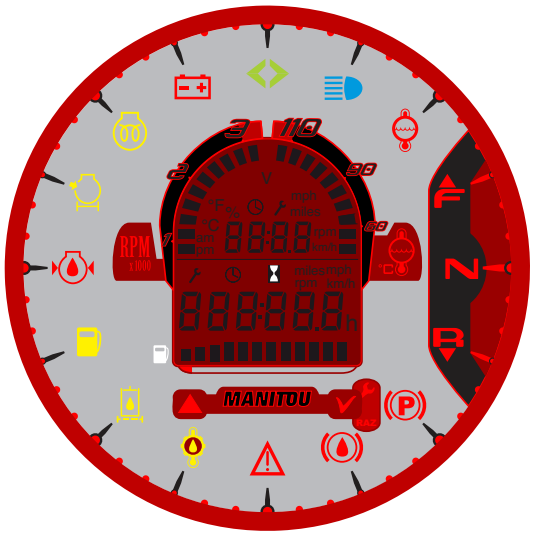

6A - CONTROL PANEL

A permanently lit or flashing warning lamp, with the engine running, is the sign of an operating fault. The lighting of some lamps may be accompanied by an audible signal. Do not ignore this warning, consult your dealer without delay. If one of the warning lamps comes on while the lift truck is in motion, stop the lift truck under the safest possible conditions.

When activating the electrical system of the lift truck, all the red and orange lamps and the panel's buzzer must light to indicate their good working order. If one of the red lamps or the buzzer does not function, carry out the necessary repairs.

REV COUNTER
10 level leds display from 0 to 3,000 rpm.

I.C. ENGINE WATER TEMPERATURE
Temperature zones:

1 led - (< 40 °C) 104 °F zone. Use the lift truck with moderation, wait for temperature to increase before normal operation.
2 leds - (40 °C - 60 °C) 104 °F - 140 °F zone.
3 leds - (60 °C - 80 °C) 140 °F - 176 °F zone.
4 leds - (80 °C - 85 °C) 176 °F - 185 °F zone.
5 leds - (85 °C - 90 °C) 185 °F - 194 °F zone.
6 leds - (90 °C - 95 °C) 194 °F - 203 °F -zone from 40 °C to 95 °C (140 °F - 203 °F) use the lift truck normally.
7 leds - (95 °C - 105 °C) 203 °F - 221 °F zone. Use the lift truck with moderation.
8 leds - (105 °C - 110 °C) 221 °F - 230 °F zone. Use the lift truck with moderation, ventilation control operating at full speed.
9 leds - Red zone (110 °C - 115 °C) 230 °F - 239 °F.
10 leds - Red zone (> 115 °C) > 239 °F Stop the lift truck, seek the cause of overheating.

NOTE: The red lamp and the buzzer come on (> 110 °C) 230 °F when the lift truck is running, stop the I.C. engine immediately and seek the cause of the failure in the cooling system.

FUEL LEVEL
When only one led remains displayed, the orange indicator lamp comes on, indicating that you using the reserve fuel supply and that your operating time is limited.

FORWARD/NEUTRAL/REVERSE LIGHT
See: 2 - DESCRIPTION: 19 - FORWARD/NEUTRAL/REVERSE GEAR SELECTION.

RED PARKING BRAKE LAMP
This lamp comes on when the parking brake is applied (see: 2 - DESCRIPTION: 8 - SWITCHES).

RED BRAKING OIL LEVEL LAMP
If the lamp comes on, when the lift truck is running, stop the I.C. engine immediately and check the braking oil level. In the event of an abnormal drop in the level, consult your dealer.

RED GENERAL FAULT WARNING INDICATOR LIGHT
If the lamp and the buzzer come on when the lift truck is running, stop the I.C. engine immediately and consult your dealer.

ORANGE TRANSMISSION OIL TEMPERATURE WARNING INDICATOR LIGHT
The lamp and the buzzer come on when the transmission oil temperature is abnormally high. Stop the lift truck and look for the cause of this overheating.

ORANGE HYDRAULIC OIL FILTER CLOGGING LAMP WARNING INDICATOR LIGHT
The lamp and buzzer come on when the air filter cartridge or the hydraulic return oil filter cartridge is clogged up. Stop the lift truck and carry out the necessary repairs (see cleaning and replacement requirements in chapter: 3 - MAINTENANCE: FILTERS CARTRIDGES AND BELTS).

RED I.C. ENGINE OIL PRESSURE WARNING INDICATOR LIGHT
If the lamp and the buzzer come on when the lift truck is running, stop the I.C. engine immediately and look for the cause (see oil level in I.C. engine crankcase).

ORANGE AIR FILTER CLOGGING INDICATOR LAMP
The lamp and buzzer come on when the air filter cartridge is clogged up. When this lamp comes on, the cartridge needs changing. Stop the lift truck and carry out the necessary repairs (see cleaning and replacement intervals in chapter: 3 - MAINTENANCE: FILTERS CARTRIDGES AND BELTS: SERVICING SCHEDULE).

ORANGE I.C. ENGINE PREHEATING INDICATOR LIGHT
If preheating is required, the lamp comes on when the lift truck's ignition is switched on and should go out as soon as pre-heating is ended. If this lamp comes on while the lift truck is in operation, immediately stop the I.C engine and find the cause.

RED BATTERY CHARGE INDICATOR LIGHT

If the lamp and the buzzer come on when the lift truck is running, stop the I.C. engine immediately and look for the cause (electric circuit, alternator belt, alternator, etc.).

GREEN DIRECTION INDICATOR LAMP

BLUE MAIN BEAM LAMP

6B - SCREEN DISPLAY

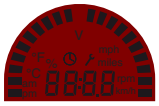
UPPER SCREEN DISPLAY

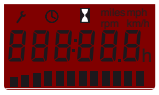
LOWER SCREEN DISPLAY

SCROLL BUTTON

VALIDATION, RESET AND ERROR CODE BUTTON

UPPER SCREEN DISPLAY

Switch on the lift truck ignition, by default, the screen will show the time. Press the scroll button to switch from one screen to the other in turn.

Clock (see adjustment). **Rev counter.** **Attachment circuit hydraulic flow rate (see: 16 - HYDRAULIC FLOW RATE).** **Lift truck speed (see your dealer for adjustment).** **Partial hour meter (see resetting).**

SETTING THE TIME

- Display clock screen.
- Press the button for 2 seconds, choose the "24 hour" or "12 hour am/pm" clock with the button and confirm .
- Régler les heures avec le bouton et valider .
- Set the minutes with the button and confirm .

RESETTING THE PARTIAL HOUR METER

- Display the partial hour meter screen.
- Press the button for two seconds, resetting is confirmed by a beep.

LOWER SCREEN DISPLAY

Switch on the lift truck ignition, by default, the screen will show the hour meter , i.e. the total number of hours the lift truck has been used. As soon as the engine is running, the flashing pictogram records the hours of operation.

MAINTENANCE INTERVAL

NOTE: When the new lift truck is started, the maintenance key will logically be displayed to provide a reminder to replace the engine oil and the oil filter after the first 50 hours of operation (see: 3 - MAINTENANCE: SERVICING SCHEDULE).

The maintenance key appears on the hour meter screen 50 hours before the maintenance deadline and generates an audible beep.

- Press the button to display the remaining time before maintenance . In the event that the deadline is exceeded, the hours are shown with a plus sign.

https://truckmanualshub.com/

- Press once more on the button to return to the hour meter screen. The maintenance key will be displayed for information.
- Contact your dealer to carry out the necessary maintenance operations and reset the maintenance interval.

NOTE: The frequency interval displayed by default is 500 hours, this interval can be modified. Please contract your dealer.

ERROR CODES

The appearance of the maintenance key on the hour meter screen together with the sounding of an audible beep, indicate that an anomaly has been detected by one of the lift truck's Electronic Control Units (ECU).

- Press the button to display the information on the upper screen and error code .
- If there are several error codes, press the button to loop through the error codes.
- Press the button once more to return to the hour meter screen, the maintenance key remains displayed as long the as the required repairs have not been carried out.
- Contact your dealer, stating the error code or codes.

NOTE: A faulty fuse can generate several error codes. When "error codes" and "maintenance interval" are displayed together, the maintenance reminder time will appear at the end of the list.

ERROR CODE	HYDROSTATIC TRANSMISSION
520201	Hydraulic transmission electronic control unit voltage fault.
520214	Hydraulic transmission electronic control unit fault.
520215	Hydrostatic motor regulator control fault.
520217	Stop light control fault.
520218	Hydraulic motor speed sensor.
520224	Hydrostatic motor operating solenoid valve control fault.
520225	Hydraulic transmission electronic control unit fault.
520226	Hydraulic transmission electronic control unit fault.
520227	Hydraulic transmission electronic control unit fault.
520273	Forward/reverse selector error.
520274	Inching sensor error.
520275	Hydrostatic pump reverse operation control fault.
520276	Hydrostatic pump forward operation control fault.
520277	Hydraulic pump speed sensor fault.
520281	Temperature outside operating range.
ERROR CODE	**MAN-MACHINE INTERFACE**
190	Engine speed data fault.
520400	Network link fault.
520401	Fuel gauge fault.
520402	Engine temperature sensor fault.
520404	Man-Machine Interface fault.
520405	Man-Machine Interface fault.
520406	Man-Machine Interface fault.
520407	Man-Machine Interface fault.
520408	Man-Machine Interface fault.
520409	Man-Machine Interface fault.
520410	Man-Machine Interface fault.
520411	Man-Machine Interface fault.
520412	Hydrostatic transmission network link fault.
520413	Electronic handling controller network connection fault.

ERROR CODE	TELESCOPE/ATTACHMENT
2662	Telescope control setting fault.
2663	Attachment control setting fault.
520300	Seat sensor fault.
520307	Proportional telescope control fault.
520310	Proportional attachment control fault.
520315	Telescope control ON/OFF fault.
520318	Attachment control ON/OFF fault.
520336	Electronic handling controller fault.
520337	Electronic handling controller fault.
520338	Electronic handling controller temperature fault.
520341	Attachment selector fault.
520350	Proportional ventilation adjustment fault.
520351	Ventilation ON/OFF adjustment control fault.
520352	Attachment forced operation control fault.
520362	Electronic handling controller 10V output fault.
520363	Attachment forced operation indicator fault.
520364	Attachment hydraulic control button fault.
520365	Attachment easy hydraulic connection button.
520366	Solenoid valve on jib head fault.
520370	Telescope retracted sensor fault (fault detected during test).
520371	Electronic handling controller temperature fault.
520376	Stability indicator fault.
520382	Aggravating hydraulic movement cut-off disable fault
520383	Computer earth output fault.
520384	Telescope retracted senor fault.
520386	Jib angle sensor fault.
520387	Strain gauge fault.
520388	Network communication fault.
520391	Inclination cut-off valve fault.
520392	Angle calibration fault (fault detected during test).
520393	Gauge calibration fault (fault detected during test).
520394	Safety valve fault.
520395	Safety valve cut-off fault (fault detected during test).
520396	Lowering regulating valve fault.
520397	Regulating fault (fault detected during test).
520398	Raising regulating valve fault.

https://truckmanualshub.com/

7- SWITCHES

NOTE: The location of the switches may vary depending on the options.

A - WARNING LIGHTS

B - REAR FOG LIGHTS

C - REVOLVING LIGHT

D - FRONT AND REAR WORKING LIGHTS
OPTION JIB HEAD LIGHTS

E - OPTION REAR WINDOW DE-ICING

F - NEUTRALISATION OF HYDRAULIC MOVEMENTS
When driving on the road, it is highly recommended (mandatory in Germany) that you cut-off all the hydraulic movements. The lamp shows when it is in use.

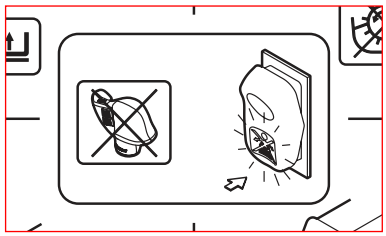

G - GEAR SELECTION
Gears can be selected while driving.
SLOW SPEED: Use for handling, switch in the up position, the indicator lamp is off.
HIGH SPEED: Use on the road, switch in down position, the high speed indicator lamp comes on.

H - WHEEL ALIGNMENT INDICATOR LAMPS
See: 2 - DESCRIPTION: 20 - STEERING SELECTION.

I - PARKING BRAKE
To connect the parking brake, press the bottom of the switch. The indicator lamp shows it is in use. To disconnect the parking brake, press the top of the switch.

J - DISABLING THE "AGGRAVATING" HYDRAULIC MOVEMENT CUT-OFF
See: 2 - DESCRIPTION: 7 - LONGITUDINAL STABILITY LIMITER AND WARNING DEVICE.

K - OPTION ATTACHMENT HYDRAULIC LOCKING DEVICE
OR
OPTION JIB HEAD SOLENOID VALVE
OR
OPTION JIB HEAD SOLENOID VALVE + ATTACHMENT HYDRAULIC LOCKING DEVICE
See: 2 - DESCRIPTION: DESCRIPTION AND USE OF THE OPTIONS.

L - OPTIONAL ATTACHMENT HYDRAULIC CONTROL FORCED OPERATION
See: 2 - DESCRIPTION: DESCRIPTION AND USE OF THE OPTIONS.

M - OPTION BLUE HEADLIGHTS
OR
OPTION ELECTRICAL JIB PROVISION
See: 2 - DESCRIPTION: DESCRIPTION AND USE OF THE OPTIONS.

N - REVERSIBLE VENTILATION CONTROL
The system cleans the radiator core and the grille of the engine cover by reversing the air flow.
Position A: The indicator light is on, the fan's rotation is reversed for a few seconds every 3 minutes.
Position B: The indicator light is off, the fan is in normal operating mode.

When in use, beware of the risk of projection into the eyes.

8 - ARMREST AND STORAGE

- Lift the armrest 1 to access the storage.

https://truckmanualshub.com/

9- FUSES AND RELAYS IN THE CAB

A fuse function file and a relay function file give a quick indication of the use of the panel's components described below.

- Lift the armrest.
- Remove the access panel 1 to access the fuses and relays.

Always replace a faulty fuse with another of equivalent rating. Never use a fuse that has been repaired.

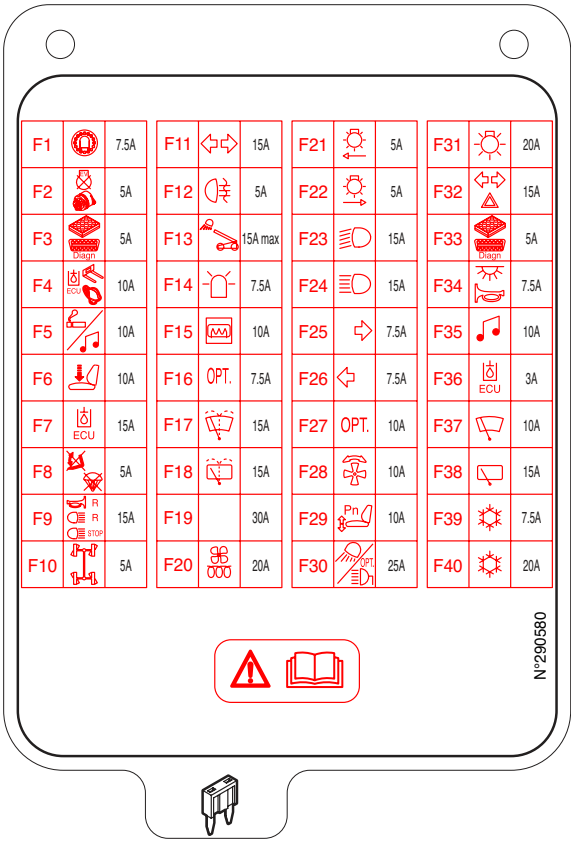

F1 - Control instrument module (7,5A).
F2 - Stop I.C. engine solenoid valve (5A).
- Alternator charge (5A).
- Longitudinal stability limiter and warning device (5A).
F3 - Diagnostic socket (5A).
- Anti-theft device provision (5A).
F4 - Transmission electronic control unit (10A).
- Telescoping and attachment movement control (10A).
- Negative parking brake solenoid valve (10A).
- Gear selection (10A).
F5 - Cigarette lighter (10A).
- OPTION Car radio (10A).
F6 - Driver present on seat (10A).
- Jib retracted and angle sensors (10A).
F7 - Hydraulic electronic control unit power supply (15A).
F8 - Inclination movement neutralization system supply (5A).
- "Aggravating" hydraulic movement cut-off deactivation (5A).
- OPTION Inclination movement neutralization system supply (5A).
F9 - Stop light relay supply (15A).
- Reversing light relay supply (15A).
- OPTION Reverse buzzer alarm relay supply (15A).
F10 - Wheel alignment (5A).
F11 - Flashing unit (15A).
F12 - Rear fog lights (5A).
F13 - OPTION Working lights on jib (15A).
F14 - Revolving light (7,5A).
F15 - OPTION Rear window defrosting (10A).
F16 - OPTION Jib head solenoid valve (7,5A).
- OPTION Jib head solenoid valve + attachment hydraulic locking device (7,5A).
F17 - Rear windscreen wiper and washer + Roof windscreen wiper (15A).
F18 - Front windscreen wiper and windscreen washer (15A).
F19 - Power supply F27-F28-F29-F30 (30A).
F20 - Heating (20A).
F21 - Left sidelights (5A).
- Cigarette lighter light power supply (5A).
F22 - Right sidelight (5A).
- Control panel lighting (5A).
F23 - Low beam (15A).
F24 - Main beam (15A).
F25 - Right indicators (7,5A).
F26 - Left indicators (7,5A).
F27 - OPTION Jib base electrical provision (10A).
F28 - Ventilation control (10A).
F29 - OPTION Pneumatic seat (10A).
F30 - Front and rear working lights (25A).
- OPTION Blue headlights (25A).
F31 - Lights, horn and indicator switch (20A).
F32 - Warning lights (15A).
F33 - Diagnostic socket (+) permanent (5A).
- Anti-theft device provision (+) permanent (5A).
F34 - Alarm (7,5A).
- Roof light (7,5A).
F35 - OPTION Car radio (+) permanent (10A).
F36 - Hydraulic electronic control unit power supply (3A).
F37 - Rear windscreen wiper (+) permanent (10A).
F38 - Front windscreen wiper (+) permanent (15A).
F39 - OPTION Air conditioning compressor relay power supply (7,5A).
F40 - OPTION Air conditioning fan motor relay power supply (20A).

https://truckmanualshub.com/

K1 - Not used.
K2 - Reversing light relay.
- OPTION Reverse sound alarm relay.
K3 - Stop light relay.
K4 - OPTION Jib-mounted working light relay
K5 - OPTION Air conditioning fan motor relay.
K6 - OPTION Air conditioning compressor relay.
K7 - Starting system safety relay.
K8 - Flashing unit.
K9 - OPTION Working light/blue headlight relay.
K10 - OPTION Air conditioning relay.

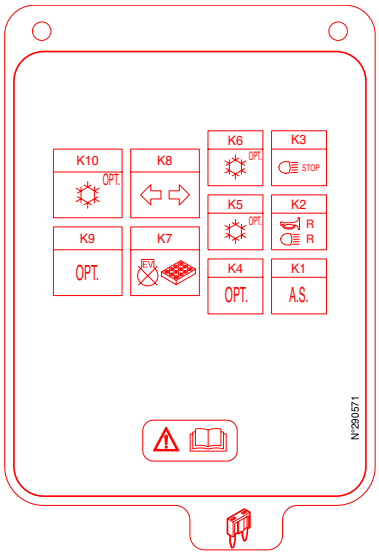

10 - FUSES AND RELAYS UNDER THE ENGINE HOOD

Open the engine bonnet, remove the cover 1 to access fuses and relays.

A sticker on the inside of the cover gives a quick indication of the use of the panel's components described below.

Always replace a faulty fuse with another of equivalent rating. Never use a fuse that has been repaired.

F41 - Not used.
F42 - Ignition switch (60A).
F43 - Alternator (80A).
F44 - Power supply for fuses in the cab (50A).
F45 - Not used.
F46 - Preheating I.C. engine (40A).

F51 - Not used.
F52 - Not used.
F53 - Not used.
F54 - Not used.
F55 - Starter solenoid (20A).
F56 - Not used.
F57 - Not used.
F58 - Not used.
F59 - Not used.
F60 - Not used.

K20 - Engine preheating relay.

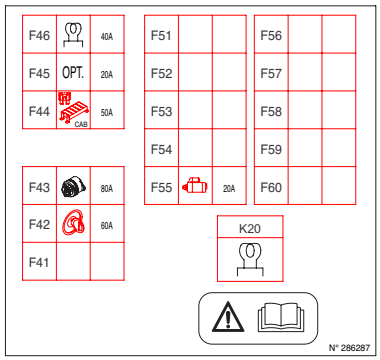

11 - LIGHTER

For 12 V appliance and max. amperage 10A.

12 - LIGHTING, HORN AND INDICATOR SWITCH

The switch controls the visual and sound alarms.

A - All lights are off, the direction indicators do not flash.
B - The right hand direction indicators flash.
C - The left hand direction indicators flash.
D - The sidelights and the rear lights are on.
E - The dipped headlights and the rear lights are on.
F - The main beam headlights and the rear lights are on.
G - Headlight signal.

Pressing the switch sounds the horn.
NOTE: The positions D - E - F - G can be carried out without the ignition being on.

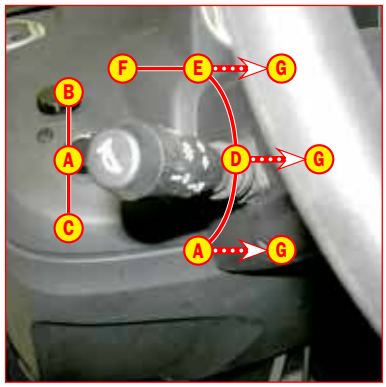

https://truckmanualshub.com/

13 - FRONT AND REAR WINDSCREEN WIPER SWITCH

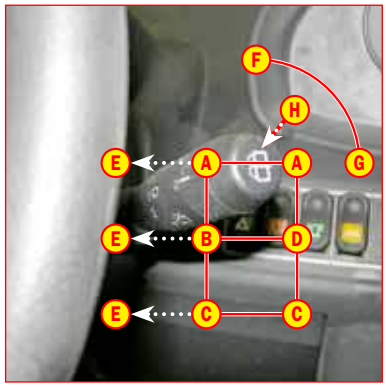

FRONT WINDSCREEN WIPER

A - Front windscreen wiper stop.
B - Slow speed for front windscreen wiper.
C - Fast speed for front windscreen wiper.
D - Front windscreen wiper intermittent control.
E - Front windscreen washer, pulse-driven.

REAR WINDSCREEN WIPER

F - Rear windscreen wiper stop.
G - Rear windscreen wiper.
H - Rear windscreen washer, pulse-driven.

14 - FUNCTION FILES

These files contain, among other things, the description of the hydraulic controls and the load charts for the attachments used on the lift truck.

15 - HYDRAULIC CONTROLS

Do not attempt to alter the hydraulic system pressure by interfering with the pressure regulating valve. In the event of suspected malfunction, contact your dealer. ANY ALTERATION MAY RENDER THE WARRANTY NUL AND VOID.

Use the hydraulic controls carefully without jerking, to avoid accidents caused by shaking the lift truck.

NOTE: When driving on the road, it is highly recommended (mandatory in Germany) that you cut-off all the hydraulic movements (see: 2 - DESCRIPTION 8 - SWITCHES).

A - Lifting and tilting control lever.
B - Telescoping control button.
C - Attachment control button.

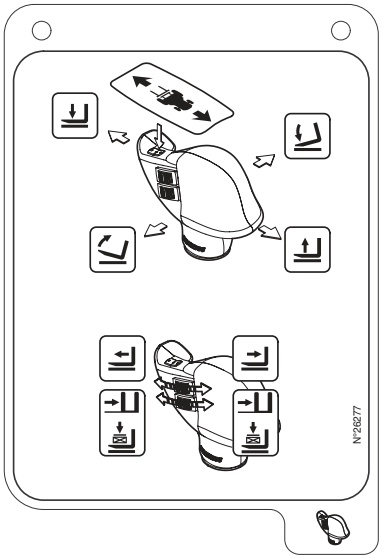

LIFTING THE LOAD

- The lever A backwards when lifting.
- The lever A forwards when lowering.

TILT OF CARRIAGE

- The lever A to the left for reverse tilt.
- The lever A to the right for forward tilt.

TELESCOPING

- Button B forwards for extending.
- Button B backwards for retracting.

ATTACHMENT

- Button C forwards or backwards.

ADJUSTMENT OF ATTACHMENT HYDRAULIC FLOW RATE

- Switch on lift truck ignition.
- Select the attachment circuit hydraulic flow rate screen with the scroll button . The screen displays, in turn, the hydraulic flow rate stored in the memory of circuit B (without "-" sign) and of circuit A (with "-" sign).
- Press the button for two seconds, the screen 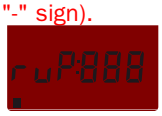 will appear on the lower screen display.
- Turn button C forward to select a hydraulic flow rate for circuit B of between 10 % and 100 %.
- Hold button C at the desired flow rate and confirm with the button .

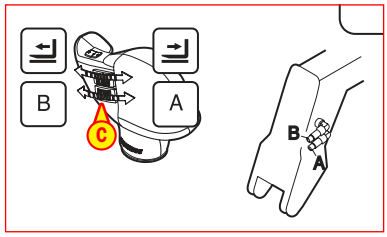

- The screen appears on the lower screen display.
- Turn button C backwards to select a hydraulic flow rate for circuit A between -10 % and -100 %.
- Hold button C at the desired flow rate and confirm with the button .
- The hour meter screen appears on the lower display screen, confirming that adjustment is completed.

https://truckmanualshub.com/

16 - ACCELERATOR PEDAL

17 - SERVICE BRAKE PEDAL AND TRANSMISSION CUT-OFF

The pedal acts on the front wheels by means of a hydraulic brake system enabling the slowing down and stopping of the lift truck. During clearance travel it enables the transmission to be cut off progressively thus allowing a gradual approach (delicate handling) with all the I.C. engine power.

18 - FORWARD/NEUTRAL/REVERSE GEAR SELECTION

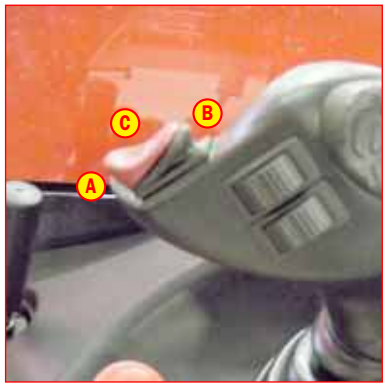

When operating this control, the lift truck should be travelling at slow speed and not accelerating.

FORWARD: Push the knob forward (position A).
REVERSE: Pull the knob backward (position B). An OPTIONAL reversing light and audible reversing alarm indicate that the lift truck is travelling in reverse.
NEUTRAL: If indicators ■ ■ or ■ ■ are flashing, pass the forward/reverse selector back through neutral (position C).

SAFETY FOR MOVING THE LIFT TRUCK
Authorisation to move the lift truck is controlled by an electronic unit. The operator must observe the following sequence to move the truck forwards or backwards:

1 - sit down correctly in the driver's seat,
2 - release the parking brake,
3 - engage forward or reverse.

To stop the lift truck, he must observe the following sequence:

1 - set the forward/reverse selector to neutral,
2 - engage the parking brake,
3 - get out of the lift truck.

- If the operator leaves the driving cab with forward or reverse engaged, the screen

will appear and beep will sound for two seconds. During this time, the operator can sit back down in the seat and continue advancing or reversing. When this time is exceeded, the forward/reverse selector will switch to neutral and the indicators ■ ■ or ■ ■ will flash. The operator must sit back down and pass the forward/reverse selector back through neutral.

19 - STEERING SELECTION

A - GREEN WHEEL ALIGNMENT LAMPS
These lamps come on to indicate the alignment of the wheels in relation to the lift truck. Lamp A1 for the front wheels and lamp A2 for the rear wheels.

Before selecting one of the three possible steering positions, bring all 4 wheels into alignment with regards to the lift truck axle. Never change the steering mode whilst driving.

B - STEERING SELECTION LEVER

B1 - Front drive wheels (highway traffic).

B2 - Front and rear drive wheels in opposite direction (short steering lock).

B3 - Front and rear drive wheels in the same direction (crab steering).

CONTROL FOR ALIGNMENT OF THE WHEELS.
- Shift the steering selection lever B into position B2 (short steering lock).
- Turn the steering wheel and bring the rear wheels into alignment until lamp A2 lights up.
- Shift the steering selection lever B into position B1 (highway traffic).
- Turn the steering wheel and bring the front wheels into alignment until lamp A1 lights up.

Before driving on roads, it is necessary to check the alignment of the rear wheels and to drive in front wheel steer. The control of the alignment of the rear wheels must be regularly done with the help of the green lamps, while driving the lift truck. In case of anomalies, consult your dealer.

https://truckmanualshub.com/

20 - HEATER CONTROL

A - FAN CONTROL
This 3-speed control allows the air to be ventilated through the air vents.

B - TEMPERATURE CONTROL
Allows the temperature inside the cab to be adjusted.
B1 - The fan pumps in the air at ambient temperature.
B2 - The fan pumps in warm air.
The intermediate positions allow the temperature to be adjusted.

20 - AIR CONDITIONING CONTROLS (OPTION AIR CONDITIONING)

The air conditioning only works if the lift truck has been started up. When using your air conditioning unit you must work with the cab closed off.
In winter: So as to ensure correct operation and complete efficiency of the air conditioning unit, start up the compressor once a week, if only for a short spell, so as to lubricate the internal seals.
In cold weather: Warm the I.C. engine before switching on the compressor, so as to allow the coolant that has collected in a liquid state at the lowest point of the compressor circuit to turn into gas under the effect of the heat given off by the I.C. engine, as the compressor is liable to be damaged by coolant in a liquid state.

If your air conditioning does not seem to be working correctly, have it examined by your dealer (see: 3 - MAINTENANCE: F - EVERY 2000 HOURS OF SERVICE). Never try to repair any faults yourself.

A - FAN CONTROL
This 3-speed control allows the air to be ventilated through the air vents.

B - TEMPERATURE CONTROL
Allows the temperature inside the cab to be adjusted.
B1 - The fan pumps in cold air.
B2 - The fan pumps in warm air.
The intermediate positions allow the temperature to be adjusted.

C - AIR CONDITIONING CONTROL
This control with a pilot light allows the air conditioning unit to be switched on.

HEATING MODE
The controls must be adjusted in the following way:
C - Control with pilot light off.
B - At the required temperature.
A - At the desired speed: 1, 2 or 3.

CONDITIONED AIR MODE
The controls must be adjusted in the following way:
C - Control with pilot light on.
B - At the required temperature.
A - At the desired speed: 1, 2 or 3.

DEMISTING MODE
The controls must be adjusted in the following way:
C - Control with pilot light on.
B - At the required temperature.
A - At speed 3.
For optimum effectiveness, close the heating ventilators.

https://truckmanualshub.com/

21 - HEATING VENTS

These swivelling heating vents, which can be shut off, allow you to direct and adjust the flow rate inside the cab.

22 - DEMIST VENTS

These vents allow the front windscreen and side windows to be demisted. For optimum efficiency, shut off the heating vents.

23 - LEVEL INDICATOR

Enables the operator to check that the lift truck is in the horizontal position.

24 - DOOR LOCK

Two keys are provided with the lift truck to enable the cabin to be locked.

25 - DOOR WINDOW OPENING HANDLE

26 - DOOR WINDOW RELEASE BUTTON

27 - HANDLE FOR REAR WINDOW OPENING

EMERGENCY EXIT
Use the rear window as an emergency exit, if it is impossible to leave the cab by the door.

28 - STEERING WHEEL ADJUSTMENT LEVER

This handle enables the angle and height of the steering wheel to be adjusted.

- Pull the knob 1 backwards.
- Adjust the steering wheel to the desired position.
- Push the knob back to lock the steering wheel in position.

29 - DOCUMENT HOLDER NET

Make sure that the operator’s manual is in the right place, i.e. in the document holder net.
NOTE: An OPTION waterproof document-holder exists.

30 - REAR STORAGE SPACE

31 - FRONT LIGHTS

A - Left front indicator.
B - Left front dipped headlight.
C - Left front main beam.
D - Left front sidelight.
E - Right front indicator.
F - Right front dipped headlight.
G - Right front main beam.
H - Right front sidelight.

32 - REAR LIGHTS

A - Left rear indicator.
B - Left rear stoplight.
C - Left tail light.
D - Rear fog light
E - Reversing light.
F - Right tail light.
G - Right rear stoplight.
H - Right rear indicator.

33 - REVOLVING LIGHT

The magnetic revolving light must be clearly visible on the roof of the cab and plugged-in to socket 1.

34 - ROOF LIGHT

35 - ROOF SCREENWIPER SWITCH

36 - SUN VISOR

37 - DIAGNOSTIC CONNECTOR

https://truckmanualshub.com/

TOWING PIN AND HOOK

Located at the rear of the lift truck, this device is used to attach a trailer. Its capacity is limited for each lift truck by the authorised gross vehicle weight, tractive effort and maximum vertical force on the coupling point. This information is given on the manufacturer's plate fixed to each lift truck (see: 2 - DESCRIPTION: IDENTIFICATION OF THE LIFT TRUCK).

- To use a trailer, see current regulations in your country (maximum running speed, braking, maximum weight of trailer, etc.).
- Verify the trailer's condition before using it (tyre condition and pressures, electrical connection, hydraulic hose, brake system…).

Do not tow a trailer or attachment which is not in perfect working order. Using a trailer in poor condition may affect the lift truck's steering and braking, and hence safety.

If a third party helps in coupling or uncoupling the trailer, this person must be permanently visible to the driver and wait until the lift truck has stopped, the handbrake is on and the I.C. engine is switched off before performing the operation.

NOTE: There is an OPTIONAL rear-view mirror which allows the lift truck to be approached more closely to the trailer ring.

A - TOWING PIN

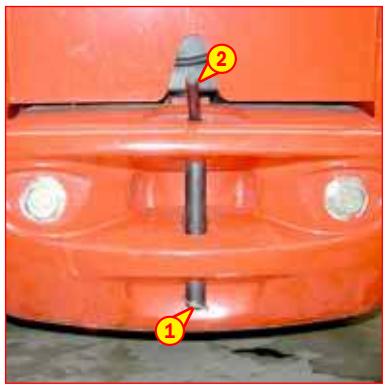

COUPLING AND UNCOUPLING THE TRAILER

- To couple the trailer, position the lift truck as close as possible to the trailer ring.
- Switch off the I.C. engine.
- Remove the clip 1, lift the trailer pin 2 and place or remove the trailer ring.

Be careful not to get your fingers caught or crushed during this operation. Do not forget to put clip 1 back in place. When uncoupling, make sure that the trailer is supported independently.

B - REAR ELECTRIC SOCKET

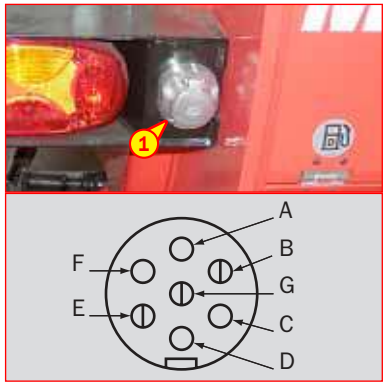

- Connect the male plug to the female socket 1 on the lift truck and make sure the lights of the trailer or the light bar are working properly.
  - A - Left rear indicator.
  - B - Rear fog lights.
  - C - Earth.
  - D - Right rear indicator.
  - E - Right tail light.
  - F - Rear stop light.
  - G - Left rear light and number plate.

C - COUPLING FITTING (OPTION)

COUPLING AND UNCOUPLING THE TRAILER

- To couple the trailer, position the lift truck as close as possible to the trailer ring.
- Switch off the I.C. engine.
- Remove the clip 1, lift the trailer pin 2 and place or remove the trailer ring.

Be careful not to get your fingers caught or crushed during this operation. Do not forget to put clip 1 back in place. When uncoupling, make sure that the trailer is supported independently.

https://truckmanualshub.com/

https://truckmanualshub.com/

DESCRIPTION AND USE OF THE OPTIONS

1- PREHEATING ELEMENT

Enables the engine block to be kept warm during prolonged periods of stoppage and thus improves engine starting.

SUPPLY CHARACTERISTICS OF PREHEATING SYSTEM:

- Rated range of power: 220-240V ; 50-60Hz
- Current consumption: 4,5A
- Class 1 equipment
- Equipment connectable only to Earth-Earth (TT) or Earth-Neutral (TN) circuits
- Installation category 2

ENVIRONMENTAL CONDITIONS FOR USE:

- Maximum ambient temperature for using preheating: +25°C (77°F)
- Pollution level 2

CONDITIONS FOR CONNECTION AND USE OF PREHEATING:

- The preheating system should not be used for an external ambient temperature higher than + 25°C (77°F).
- It is essential that the power supply to the preheating system is:
  - Effected with a cable that conforms to the installation standards in force and contains a protective earth conductor.
  - Contains an appropriate isolation system.
  - Incorporate an appropriate safety system against short circuits (fuses or circuit breaker) and a differential circuit breaker with 30 mA sensitivity.
- Only connect to and disconnect from the power supply while the unit is off and the I.C. engine is stopped.

2 - REVERSE BUZZER ALARM

3 - NUMBER PLATE LIGHTING

4 - ANGULAR SECTOR ON JIB

The angular sector displays the jib angle, and thus improves the reading of the load charts.

https://truckmanualshub.com/

5 - ELECTRICAL PROVISION ON JIB

Enables an electrical function to be used at the head of the jib.

OPERATION

- Set switch 1 to position A to enable the electrical provision. The indicator light will come on when it is enabled.

6 - ATTACHMENT EASY HYDRAULIC CONNECTION

For easily connecting and disconnecting the attachment.

OPERATION

- Switch on lift truck ignition.
- Press for two seconds on push-button 1 to release the attachment circuit hydraulic pressure.
- Connect or disconnect the rapid connectors of the hydraulic attachment (see: 4 - OPTIONAL ATTACHMENTS FOR USE WITH THE RANGE: PICKING UP THE ATTACHMENTS).

7 - EXTERIOR DRAIN BACK

Enables connection of an attachment for which drain-back is required.

8 - HYDRAULIC ATTACHMENT LOCKING

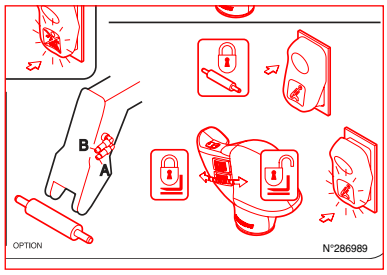

Enables the attachment to be locked onto the carriage and a hydraulic attachment to be used by the same hydraulic circuit.

ATTACHMENT LOCKING CONTROL

- Set valve 1 to position A and place switch 2 in position B (indicator light on).
- Push button 3 forward to lock the attachment and backward to release it.

Once the attachment is locked, return switch 2 to position A to prevent accidental release of the attachment.

ATTACHMENT OPERATION CONTROL

- Set the valve to position B.
- Push button 3 forward or backward.

https://truckmanualshub.com/

9 - JIB HEAD SOLENOID VALVE

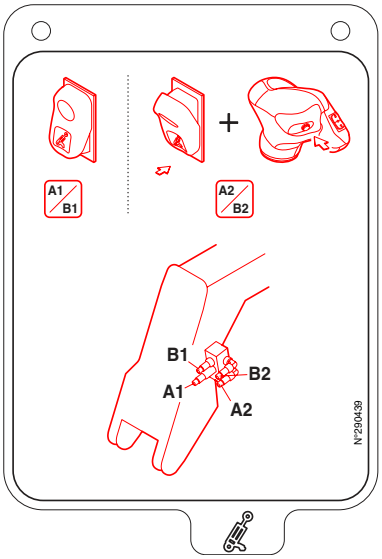

Enables use of two hydraulic functions on the attachment circuit.

To make connection of the rapid connectors easier, decompress the hydraulic circuit by pressing button 1 on the solenoid valve.

ATTACHMENT LINE A1/B1 CONTROL
- Set switch 1 to position A (indicator light off).
- Push button 2 forward or backward.

ATTACHMENT LINE A2/B2 CONTROL
- Set switch 1 to position B (indicator light on) and hold down button 3.
- Push button 2 forward or backward.

10 - JIB HEAD SOLENOID VALVE + HYDRAULIC ATTACHMENT LOCKING

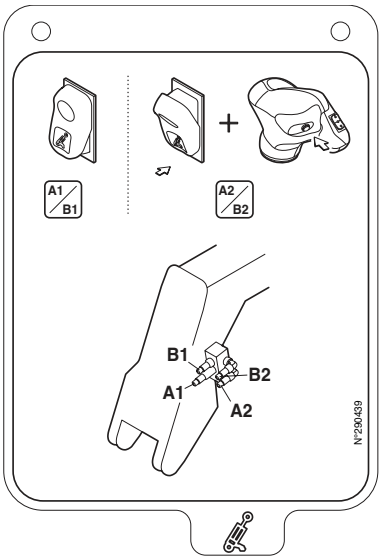

Enables the use of a hydraulic function and hydraulic locking of the attachment on the attachment circuit.

To make connection of the rapid connectors easier, decompress the hydraulic circuit by pressing button 1 on the solenoid valve.

ATTACHMENT LINE A1/B1 CONTROL
- Set switch 1 to position A (indicator light off).
- Push button 2 forward or backward.

ATTACHMENT A2/B2 LOCKING CONTROL
- Set switch 1 to position B (indicator light on) and hold down button 3.
- Push button 2 forward to lock the attachment and backward to release it.

https://truckmanualshub.com/

11 - ATTACHMENT HYDRAULIC CONTROL FORCED OPERATION

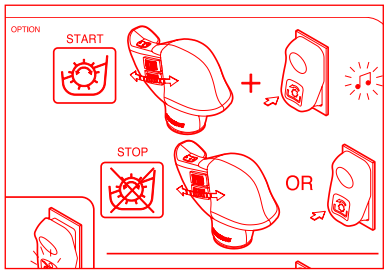

This OPTION must only be used with an attachment requiring continuous hydraulic movement of type: brush, supply bucket, mixer, spray... It is strictly forbidden in handling operations and at all other events (winch, crane jib, crane jib with winch, hook, etc.).

CONTINUOUS HYDRAULIC MOVEMENT OF THE ATTACHMENT

- Simultaneously hold button 1 in the forward or backward position (according to the type of attachment) and switch 2 in position B (indicator light on). An audible beep will sound when activated. Release button 1 and switch 2.
- To stop the movement, push again on the bottom of switch 1, or press pushbutton 2.

NOTE: If the operator leaves the driver's cab, the continuous hydraulic movement will automatically stop and must be restarted.

12 - ATTACHMENT HYDRAULIC FLOW RATE SELECTOR

The selector has 4 positions, of which 3 can be configured according to the type of attachment, the 4th position being fixed at 100 %.

ADJUSTING HYDRAULIC FLOW RATES

- Place the selector to position 1, and adjust the attachment flow rate (see: 2 - DESCRIPTION: 16 - HYDRAULIC CONTROLS).
- Repeat the procedure for positions 2 and 3.

READING HYDRAULIC FLOW RATES

- Scroll the upper display screen until the attachment hydraulic flow rate display screen is displayed and set the flow rate selector to positions 1, 2 or 3 to read the recorded flow rate.

https://truckmanualshub.com/

https://truckmanualshub.com/

3 - MAINTENANCE

https://truckmanualshub.com/

https://truckmanualshub.com/

TABLE OF CONTENTS

MANITOU ORIGINAL SPARE PARTS AND EQUIPMENT 3-4

START-UP CHECKLIST 3-5

FILTERS CARTRIDGES AND BELTS 3-6

LUBRICANTS AND FUEL 3-8

SERVICING SCHEDULE 3-10

A - DAILY OR EVERY 10 HOURS SERVICE 3-12

B - EVERY 50 HOURS SERVICE 3-16

C - EVERY 250 HOURS OF SERVICE 3-20

D - EVERY 500 HOURS SERVICE 3-22

E - EVERY 1000 HOURS OF SERVICE 3-26

F - EVERY 2000 HOURS OF SERVICE 3-30

G - OCCASIONAL MAINTENANCE 3-32

https://truckmanualshub.com/

MANITOU ORIGINAL SPARE PARTS AND EQUIPMENT

OUR LIFT TRUCKS MUST BE SERVICED USING ORIGINAL MANITOU PARTS.

IF YOU USE PARTS WHICH ARE NOT ORIGINAL MANITOU PARTS,

YOU RISK

- Legally - to be held responsible in the event of an accident.

- Technically - to generate operating failure or shorten the life of the lift truck.

THE USE OF COUNTERFEIT PARTS OR COMPONENTS NOT APPROVED BY THE MANUFACTURER,
MEANS YOU LOSE THE BENEFIT OF THE CONTRACTUAL GUARANTEE.

BY USING ORIGINAL MANITOU PARTS FOR MAINTENANCE OPERATIONS,

YOU BENEFIT EXPERTISE

Through its network, MANITOU provides the user with

- Know-how and competence.

- The guarantee of high-quality work.

- Original replacement components.

- Help with preventive maintenance.

- Efficient help with diagnosis.

- Improvements due to experience feedback.

- Operator training.

- Only the MANITOU network has detailed knowledge of the design of the lift truck and therefore the best technical ability to provide maintenance.

ORIGINAL REPLACEMENT PARTS ARE DISTRIBUTED EXCLUSIVELY BY MANITOU AND ITS DEALER NETWORK.
the dealer network list is available on manitou web site www.manitou.com

https://truckmanualshub.com/

START-UP CHECKLIST

0 = OK 1 = Missing 2 = Incorrect

100	**ENGINE**	
01	Air filter	
02	Fuel tank	
03	Fuel lines - Filter	
04	Injection or carburetion system	
05	Radiator and cooling system	
06	Belts	
07	Hoses	
101	**TRANSMISSION**	
01	Direction reversal system	
02	Gear shift	
03	Cut-off pedal	
04	Clutch	
102	**AXLES/TRANSFER GEAR BOX**	
01	operation and seal	
02	Stop settings	
103	**HYDRAULIC/HYDROSTATIC CIRCUIT**	
01	Tank	
02	Pumps and couplings	
03	Tightening of connections	
04	Lift cylinder(s)	
05	Tilt cylinder(s)	
06	Attachment cylinder(s)	
07	Telescope cylinder(s)	
08	Compensation cylinder(s)	
09	Steering cylinder(s)	
10	Control Valve	
11	Balancing valve	
104	**BRAKE SYSTEM**	
01	Service brake and parking brake operation	
02	Brake fluid level	
105	**LUBRICATION AND GREASING**	
106	**JIB/MANISCOPIC/MANIACCESS ASSEMBLY**	
01	Beam and telescope(s)	
02	Skid	
03	Hinges	
04	Carriage	
05	Forks	
107	**MAST ASSEMBLY**	
01	Fixed and mobile uprights	
02	Carriage	
03	Chains	
04	Rollers	
05	Forks	

108	**ATTACHMENTS**	
01	Fitting on machine	
02	Hydraulic couplings	
109	**CABIN/PROTECTOR/ELECTRIC CIRCUIT**	
01	Seat	
02	Dashboard and radio	
03	Sound and visual alarm/safety system	
04	Heating/Air conditioning	
05	Windscreen wiper/windscreen washer	
06	Road horn	
07	Reversing horn	
08	Road lights	
09	Additional lights	
10	Rotating beacon light	
11	Battery	
110	**WHEEL**	
01	Rims	
02	Tyre/Pressure	
111	**SCREWS**	
112	**FRAME AND BODYWORK**	
113	**PAINTING**	
114	**GENERAL OPERATION**	
115	**OPERATOR'S MANUAL**	
116	**CUSTOMER INSTRUCTIONS**	

https://truckmanualshub.com/

FILTERS CARTRIDGES AND BELTS

I.C. ENGINE			
	I.C. ENGINE OIL FILTER Part number: 279809 Change: 500 H	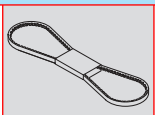	ALTERNATOR BELT Part number: 292198
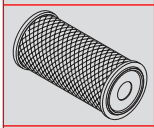	DRY AIR FILTER CARTRIDGE Part number: 563416 Clean: 50 H* Change: 500 H*	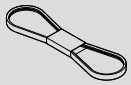	VENTILATION ADJUSTMENT BELT Part number: 289330
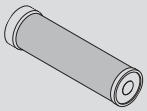	SAFETY DRY AIR FILTER CARTRIDGE Part number: 563415 Change: 1000 H*	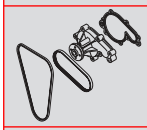	WATER PUMP KIT Part number: 894164 Change: 3000 H
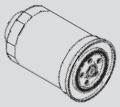	FUEL FILTER Part number: 746364 Change: 500 H	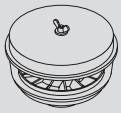	CYCLONIC PRE-FILTER Part number: 224713 Clean: 10 H

*: This frequency is given for information only (see: 3 - MAINTENANCE: SERVICING SCHEDULE) for cleaning and changing.

HYDRAULIC			
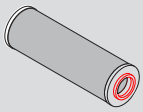	HYDRAULIC RETURN OIL FILTER CARTRIDGE Part number: 686236 Change : 500 H		BRAKE ACCUMULATOR UNIT FILTER Part number: 746308 Change : 1000 H

CAB	
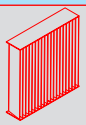	CAB VENTILATION FILTERS Part number: 750306 Clean: 50 H Change: 250 H

https://truckmanualshub.com/

https://truckmanualshub.com/

LUBRICANTS AND FUEL

USE THE RECOMMENDED LUBRICANTS AND FUEL:
- For topping up, oils may not be miscible.
- For oil changes, MANITOU oils are perfectly appropriate.

DIAGNOSTIC ANALYSIS OF OILS

If a service or maintenance contract has been organized with the dealer, a diagnostic analysis of engine, transmission and axle oils may be requested depending on the rate of use.

(*) RECOMMENDED FUEL SPECIFICATION

Use a high-quality fuel to obtain optimal performance of the I.C. engine.

- N590 diesel fuel type - Auto/C0/C1/C2/C3/C4
- BS2869 Class A2
- ASTM D975-91 Class 2-2DA, US DF1, US DF2, US DFA
- JIS K2204 (1992) Grades 1, 2, 3 and Special Grade 3.

I.C. ENGINE				
ORGANS TO BE LUBRICATED	CAPACITY	RECOMMENDATION	PACKAGING	PART NUMBER
I.C. ENGINE	11,2L (3 gl)	Shell: Rotella 15w40 Citgo: C-600 15w40		
COOLING CIRCUIT	12L (3.1 gl)	Tulco 50/50 Premix Anti-freeze		
FUEL TANK	63L (16.4 gl)	Diesel fuel (*)		

JIB			
ORGANS TO BE LUBRICATED	RECOMMENDATION		
JIB PADS	Shell: Rentinax Am Citgo: Lithoplex CM-2		
GREASING OF THE JIB	Shell: Rentinax Am Citgo: Lithoplex CM-2		

HYDRAULIC				
ORGANS TO BE LUBRICATED	CAPACITY	RECOMMENDATION		
HYDRAULIC OIL TANK	115L(30.4 gl)	Shell: Tellus T46 Citgo: Transgard THF Lo-Temp		

BRAKE			
ORGANS TO BE LUBRICATED	RECOMMENDATION		
BRAKE CIRCUIT	Shell: Donax TG Dexron III Citgo: Transgard ATF Dexron III		

CAB			
ORGANS TO BE LUBRICATED	RECOMMENDATION		
WINDSCREEN WASHER TANK	Windscreen washer fluid		

FRONT AXLE				
ORGANS TO BE LUBRICATED	CAPACITY	RECOMMENDATION		
FRONT AXLE DIFFERENTIAL	4L (1 gl)	Shell: Donax TD Citgo: Transgard (THF)		
TRANSFER BOX FRONT WHEELS REDUCERS	,75L (.8 qt) ,8L (.85 qt)	Shell: Spirax DH 80w90 Citgo: Premium Gear MP 80w90		
FRONT WHEELS REDUCERS PIVOTS		Shell: Rentinax Am Citgo: Lithoplex CM-2		

REAR AXLE				
ORGANS TO BE LUBRICATED	CAPACITY	RECOMMENDATION		
REAR AXLE DIFFERENTIAL	3,8L (1 gl)	Shell: Donax TD Citgo: Transgard (THF)		
REAR WHEELS REDUCERS	0,9L (.95 qt)	Shell: Spirax DH 80w90 Citgo:Premium Gear MP 80w90		
REAR WHEELS REDUCERS PIVOTS REAR AXLE OSCILLATION		Shell: Rentinax Am Citgo: Lithoplex CM-2		

https://truckmanualshub.com/

SERVICING SCHEDULE

(1): MANDATORY 500 HOUR OR 6 MONTH SERVICE

This service must be carried out after approximately the first 500 hours of service or within the 6 months following the start-up of the machine (whichever occurs first).

(2): The I.C engine oil and oil filter must be replaced after the first 50 hours of service, then every 500 hours of service.

A = ADJUST, C = CHECK, G = GREASE, N = CLEAN, P = BLEED, R = REPLACE, V = DRAIN	PAGE	(1)	DAILY OR EVERY 10 HOURS OF SERVICE	EVERY 50 HOURS OF SERVICE	EVERY 250 HOURS OF SERVICE	EVERY 500 HOURS OF SERVICE OR EVERY 6 MONTHS	EVERY 1000 HOURS OF SERVICE OR EVERY YEAR	EVERY 2000 HOURS OF SERVICE OR EVERY TWO YEARS	EVERY 3000 HOURS OF SERVICE	EVERY 4000 HOURS OF SERVICE	OCCASIONALLY
I.C. ENGINE											
I.C. engine oil level	3-12	C	C	<<<	<<<	<<<	<<<	<<<	<<<	<<<	
Cooling liquid level	3-12	C	C	<<<	<<<	<<<	<<<	<<<	<<<	<<<	
Fuel level	3-12	C	C	<<<	<<<	<<<	<<<	<<<	<<<	<<<	
Cyclonic pre-filter	3-12	N	N	<<<	<<<	<<<	<<<	<<<	<<<	<<<	
Dry air filter cartridge	3-16/22	R		N	<<<	R	<<<	<<<	<<<	<<<	
Radiator cores	3-16	N		N	<<<	<<<	<<<	<<<	<<<	<<<	
Condenser core (OPTION Air conditioning)	3-16	C/N		C/N	<<<	<<<	<<<	<<<	<<<	<<<	
Alternator/fan/crankshaft belt tension	3-20	C/A			C/A	<<<	<<<	<<<	<<<	<<<	
Compressor belt tension (OPTION Air conditioning)	3-20	C/A			C/A	<<<	<<<	<<<	<<<	<<<	
Fuel water trap	3-20	V			V	<<<	<<<	<<<	<<<	<<<	
I.C. engine oil *(2)*	3-22	V				V	<<<	<<<	<<<	<<<	
I.C. engine oil filter *(2)*	3-22	R				R	<<<	<<<	<<<	<<<	
Fuel filter	3-23	R				R	<<<	<<<	<<<	<<<	
Alternator/fan/crankshaft belt		R**				R**	<<<	<<<	<<<	<<<	
Fuel tank	3-26						N	<<<	<<<	<<<	
Safety dry air filter cartridge	3-26						R	<<<	<<<	<<<	
I.C. engine silent blocks							C**	<<<	<<<	<<<	
I.C. engine rates							C**	<<<	<<<	<<<	
Valves clearances		C**					C**	<<<	<<<	<<<	
Cooling liquid	3-30							V		<<<	
Injection pump								C**		<<<	
Injectors								C**		<<<	
Radiator								C**		<<<	
Water pump and the thermostat								C**		<<<	
Alternator and the starter motor								C**		<<<	
Turbocompressor								C**		<<<	
Water pump kit									R**		
Fuel circuit	3-32										P
TRANSMISSION											
Hydrostatic transmission circuit pressures								C**		<<<	
Governing start of the hydrostatic transmission								C**		<<<	
Hydrostatic transmission cut-off operation								C**		<<<	
TYRES											
Tyres pressure	3-13	C	C	<<<	<<<	<<<	<<<	<<<	<<<	<<<	
Wheel nuts torque	3-13	C	C	<<<	<<<	<<<	<<<	<<<	<<<	<<<	
Condition of wheels and tyres							C**	<<<	<<<	<<<	
Wheel	3-32										R
JIB											
Jib pads	3-13		G*	<<<	<<<						
Jib	3-17	G		G	<<<	<<<	<<<	<<<	<<<	<<<	
Jib pads wear							C**	<<<	<<<	<<<	
Condition of jib unit								C**		<<<	
Bearings and articulation rings								C**		<<<	
HYDRAULIC											
Hydraulic oil level	3-18	C		C	<<<	<<<	<<<	<<<	<<<	<<<	
Hydraulic return oil filter cartridge	3-23	R				R	<<<	<<<	<<<	<<<	
Hydraulic oil	3-27						V	<<<	<<<	<<<	
Brake accumulator unit filter	3-27						R	<<<	<<<	<<<	
Speeds of hydraulic movements							C**	<<<	<<<	<<<	
Hydraulic pump tubular filter							N**	<<<	<<<	<<<	
Condition of hoses and flexible pipes							C**	<<<	<<<	<<<	
Condition of cylinders (leakage, shafts)							C**	<<<	<<<	<<<	
Hydraulic circuit pressures								C**		<<<	
Hydraulic circuit outputs								C**		<<<	
Hydraulic oil tank								N**		<<<	

https://truckmanualshub.com/

A = ADJUST, C = CHECK, G = GREASE, N = CLEAN, P = BLEED, R = REPLACE, V = DRAIN	PAGE	(1)	DAILY OR EVERY 10 HOURS OF SERVICE	EVERY 50 HOURS OF SERVICE	EVERY 250 HOURS OF SERVICE	EVERY 500 HOURS OF SERVICE OR EVERY 6 MONTHS	EVERY 1000 HOURS OF SERVICE OR EVERY YEAR	EVERY 2000 HOURS OF SERVICE OR EVERY TWO YEARS	EVERY 3000 HOURS OF SERVICE	EVERY 4000 HOURS OF SERVICE	OCCASIONALLY
BRAKE											
Brake oil level	3-18	C		C	<<<	<<<	<<<	<<<	<<<	<<<	
Brake oil							V**	<<<	<<<	<<<	
Brake system							P**	<<<	<<<	<<<	
Brake system pressure							C**	<<<	<<<	<<<	
Brake							A**	<<<	<<<	<<<	
STEERING											
Steering								C**		<<<	
Steering swivel joints										C**	
CAB											
Windscreen washer liquid level	3-18	C		C	<<<	<<<	<<<	<<<	<<<	<<<	
Cab ventilation filters	3-18/20	R		N	R	<<<	<<<	<<<	<<<	<<<	
Seat belt	3-28						C	<<<	<<<	<<<	
Condition of the rear view mirrors							C**	<<<	<<<	<<<	
Structure							C**	<<<	<<<	<<<	
Air conditioning (OPTION)	3-31							N/C		<<<	
ELECTRICITY											
Longitudinal stability and limiter warning device	3-14/38	C	C	<<<	<<<	<<<	<<<	<<<	<<<	<<<	XXX
Condition of wiring harness and cables							C**	<<<	<<<	<<<	
Lights and signals							C**	<<<	<<<	<<<	
Warning indicators							C**	<<<	<<<	<<<	
Front headlights	3-33										A
Battery failure	3-33										R
FRONT AXLE											
Front wheels reducers pivots	3-17	G		G	<<<	<<<	<<<	<<<	<<<	G/C**	
Transfer box oil level	3-21	C			C	<<<	<<<	<<<	<<<	<<<	
Front axle differential oil level	3-21	C			C	<<<	<<<	<<<	<<<	<<<	
Front wheels reducers oil level	3-21	C			C	<<<	<<<	<<<	<<<	<<<	
Transfer box oil	3-24	V				V	<<<	<<<	<<<	<<<	
Front axle differential oil	3-24	V				V	<<<	<<<	<<<	<<<	
Front wheels reducers oil	3-28	V					V	<<<	<<<	<<<	
Wear of front axle brake discs										C**	
Front wheels reducers universal joint										C**	
Front wheels reducers clearance										C**	
Set of transfer box rolling bearings										C**	
REAR AXLE											
Rear wheels reducers pivots	3-17	G		G	<<<	<<<	<<<	<<<	<<<	G/C**	
Rear axle oscillation	3-17	G		G	<<<	<<<	<<<	G/C**		<<<	
Rear axle differential oil level	3-21	C			C	<<<	<<<	<<<	<<<	<<<	
Rear wheels reducers oil level	3-21	C			C	<<<	<<<	<<<	<<<	<<<	
Rear axle differential oil	3-28	V					V	<<<	<<<	<<<	
Rear wheels reducers oil	3-28	V					V	<<<	<<<	<<<	
Rear wheels reducers universal jointdifferential										C**	
Rear wheels reducers clearance										C**	
CHASSIS											
Structure							C**	<<<	<<<	<<<	
Bearings and articulation rings								C**		<<<	
ATTACHMENTS											
Forks wear		C**				C**	<<<	<<<	<<<	<<<	
Attachment carriage							C**	<<<	<<<	<<<	
Condition of attachments							C**	<<<	<<<	<<<	
LIFT TRUCK											
Tow the lift truck	3-34										XXX
Sling the lift truck	3-34										XXX
Transport the lift truck on a platform	3-35										XXX

(*): Every 10 hours of service during the first 50 hours of service, then one last time at 250 hours of service.
(**): Consult your dealer.

https://truckmanualshub.com/

A - DAILY OR EVERY 10 HOURS SERVICE

A1 - I.C. ENGINE OIL LEVEL

CHECK

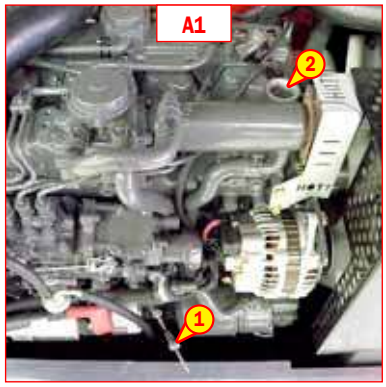

Place the lift truck on level ground with the I.C. engine stopped, and let the oil drain into the sump.

- Open the I.C. engine bonnet.
- Remove the dipstick 1 (fig. A1).
- Clean the dipstick and check the correct level between the two notches.
- If necessary, add oil (see: 3 - MAINTENANCE: LUBRICANTS AND FUEL) by the filler port 2 (fig. A1).
- Check visually that there is no leakage or seepage of oil in the I.C. engine.

A2 - COOLING LIQUID LEVEL

CHECK

Place the lift truck on level ground with the I.C. engine stopped, and allow the I.C. engine to cool.

- Open the I.C. engine bonnet.
- The liquid must be at mid-height on the expansion pan 1 (fig. A2).
- If necessary, add cooling liquid (see: 3 - MAINTENANCE: LUBRICANTS AND FUEL) through the filler port 2 (fig. A2).
- Check visually that there is no leakage in the radiator and pipes.

To avoid any risk of spraying or burning, wait until the I.C. engine has cooled down before removing the cooling circuit filler plug. If the cooling liquid is very hot, add only hot cooling liquid (80 °C) 176 F. In an emergency, you can use water as a cooling liquid, then change the cooling circuit liquid as soon as possible (see: 3 - MAINTENANCE: F1 - COOLING LIQUID).

A3 - FUEL LEVEL

CHECK

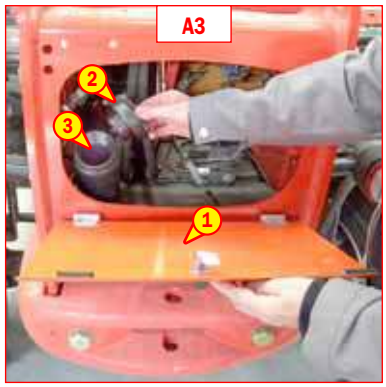

Keep the fuel tank full, to reduce as much as possible any condensation due to the atmospheric conditions.

- Open access panel 1 (fig. A3).
- Remove cap 2 (fig. A3).
- Fill the fuel tank with clean fuel (see: 3 - MAINTENANCE: LUBRICANTS AND FUEL), filtered through a strainer or a clean, lint free cloth, through filler port 3 (fig. A3).
- Put the cap back 2 (fig. A3).
- Check visually that there is no leakage in the tank and pipes.
- Close the access panel.

Never smoke or approach with a flame during filling operations or when the tank is open. Never refill while I.C. engine is running.

https://truckmanualshub.com/

A4 - CYCLONIC PRE-FILTER

CLEAN

The cleaning interval is given as a guide, however the pre-filter must be emptied as soon as impurities reach the MAXI level on the tank.

- Loosen nut 1 (fig. A4), remove cover 2 (fig. A4) and empty the tank.
- Clean the pre-filter unit with a clean dry cloth and reassemble the unit.

When cleaning, take care not to let impurities into the dry air filter.

A5 - TYRES PRESSURE AND WHEEL NUTS TORQUE

CHECK

- Check the condition of the tyres, to detect cuts, protuberances, wear, etc.
- Check the torque load of the wheel nuts. Non compliance with this instruction can cause damage and rupture to the wheel bolts and distortion to the wheels.

  Wheel nuts tightening torque
  - Front tyres: 630 N.m (465 lbf/ft) ± 15%
  - Rear tyres: 630 N.m (465 lbf/ft) ± 15%
- Check and adjust the tyre pressures if necessary (see: 2 - DESCRIPTION: FRONT AND REAR TYRES).

Check that the air hose is correctly connected to the tyre valve before inflating and keep all persons at a distance during inflation. Respect the recommended tyre pressures given.

NOTE: There is an OPTIONAL wheel toolkit.

A6 - JIB PADS

CLEAN - GREASE

To be carried out every 10 hours during the first 50 hours service, then once at 250 hours.

- Extend the jib completely.
- With a brush, apply a coat of grease (see: 3 - MAINTENANCE: LUBRICANTS AND FUEL) on the 4 sides of the telescope(s) (fig. A6).
- Telescope the jib several times in order to spread the coat of grease evenly.
- Remove the surplus of grease.

If the lift truck is used in an abrasive environment (dust, sand, coal...) Use lubricating varnish (MANITOU reference: 483536). In this respect, consult your dealer.

https://truckmanualshub.com/

https://truckmanualshub.com/

B - EVERY 50 HOURS SERVICE

Carry out the operations described previously as well as the following operations.

B1 - DRY AIR FILTER CARTRIDGE

CHECK - CLEAN

In case of use in a heavily dust laden atmosphere, there are pre-filtration cartridges (see: 3 - MAINTENANCE: FILTERS CARTRIDGES AND BELTS). Also, the checking and cleaning frequency of the cartridge must be reduced.

If the clogging indicator light comes on, this operation must be carried out as quickly as possible (1 hour maximum). The cartridge must not be cleaned more than seven times, after which it must be changed. Never use the lift truck without an air filter or with a damaged air filter.

- For the disassembly and reassembly of the cartridge, see: 3 - MAINTENANCE: D3 - DRY AIR FILTER CARTRIDGE.
- Clean the filter cartridge using a compressed air jet (max. pressure 3 bar(44 psi) directed from the top to the bottom and from the inside towards the outside at a minimum distance of 30 mm (1.18 in.)from the cartridge wall.
- Cleaning is completed when there is no more dust on the cartridge.

Respect the safety distance of 30 mm (1.18 in) between the air jet and the cartridge to avoid tearing or making a hole in the cartridge. The cartridge must not be blown anywhere near the air filter box. Never clean the cartridge by tapping it against a hard surface. Your eyes must be protected during this intervention.

- Clean the cartridge seal surfaces with a damp, clean lint-free cloth and grease with a silicone lubricant (MANITOU reference: 479292).
- Check visually the outer condition of the air filter and its mounts. Verify the condition of the hoses and their mounts also.

Never clean the dry air filter cartridge by washing it in liquid. Do not clean by any means the safety cartridge located inside the filter cartridge, change it for a new one if it is clogged or damaged.

B2 - RADIATOR CORES

CLEAN

In a polluting atmosphere, clean the radiator cores every day. Do not use a water jet or high-pressure steam as this could damage the radiator fins.

- Open the I.C. engine bonnet.
- If necessary, clean the suction grid on the engine hood.
- Using a soft cloth, clean the radiator cores in order to remove as much dirt as possible.
- Clean the cores using a compressed air jet aimed in the same direction as the cooling air flow (fig. B2).
- Clean with the fan running for best results.

B3 - CONDENSER CORE (OPTION AIR CONDITIONING)

CHECK - CLEAN

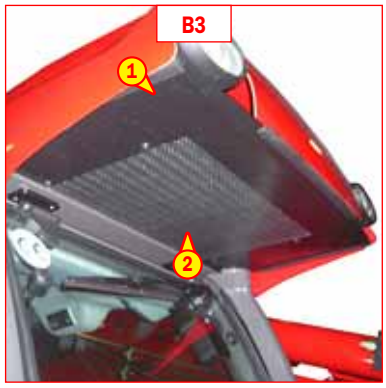

In a polluting atmosphere, clean the radiator core every day. Do not use a water jet or high-pressure steam as this could damage the condenser fins.

- Remove the protective grid 1 (fig. B3) and clean it if necessary.
- Visually check whether the condenser 2 (fig. B3) is clean and clean it if necessary.
- Clean the condenser using a compressed air jet aimed in the same direction as the air flow (fig. B3).
- Clean with the fan running for best results.

https://truckmanualshub.com/

To be carried out weekly, if the lift truck has been operated for less than 50 hours during the week.

In the event of prolonged use in an extremely dusty or oxidising atmosphere, reduce this interval to 10 working hours or every day.

Clean and lubricate the following points with grease (see: 3 - MAINTENANCE: LUBRICANTS AND FUEL) and remove the surplus of grease.

JIB

1 - Lubricators of the jib axle (2 lubricators).
2 - Lubricator of the carriage axle (1 lubricator).
3 - Lubricator of the tilt cylinder head axle (1 lubricator).
4 - Lubricator of the tilt cylinder foot axle (1 lubricator).
5 - Lubricator of the lifting cylinder foot axle (1 lubricator).
6 - Lubricator of the lifting cylinder head axle (1 lubricator).
7 - Lubricator of the compensation cylinder foot axle (1 lubricator).
8 - Lubricator of the compensation cylinder head axle (1 lubricator).

FRONT AND REAR WHEELS REDUCER PIVOTS

9 - Lubricators of the wheel reduction gear pivots (8 lubricators).

REAR AXLE OSCILLATION

10 - Rear axle oscillation lubricators (2 lubricators).

https://truckmanualshub.com/

B5 - HYDRAULIC OIL LEVEL

CHECK

If necessary, remove and reconnect the hydraulic attachment (see: 4 - OPTIONAL ATTACHMENTS FOR USE WITH THE RANGE: PICKING UP THE ATTACHMENTS). Place the lift truck on level ground with the engine stopped and the jib retracted and lowered to its maximum extent.

- Refer to gauge 1 (fig. B5/1).
- The oil level is correct when it is at the level of the red point.
- If necessary, add oil (see: 3 - MAINTENANCE: LUBRICANTS AND FUEL).
- Remove cap 2 (fig. B5/2).
- Add oil through filler port 3 (fig. B5/2).

Use a clean funnel and clean the underside of the oil drum before filling.

- Replace the cap.
- Check visually that there is no leakage in the tank and pipes.

Always maintain the oil level at maximum as cooling depends on the oil flowing through the tank.

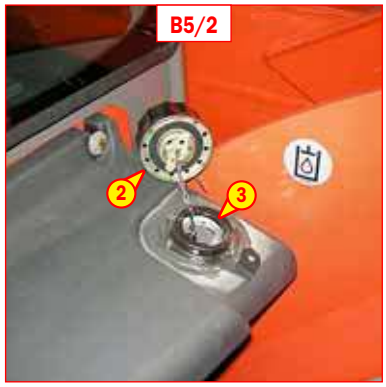

B6 - BRAKE OIL LEVEL

CHECK

Place the lift truck on level ground.

- Loosen the two knurled screws 1 (fig. B6/1) and remove the protective cover 2 (fig. B6/1).
- Check tank 3 (fig. B6/2). The correct level must stand at the MAX level in the tank.
- If necessary, add oil (see: 3 - MAINTENANCE: LUBRICANTS AND FUEL).
- Remove cap 4 (fig. B6/2).
- Add oil through filler port 5 (fig. B6/2).
- Replace the cap.
- Check visually that there is no leakage in the tank and pipes.

If the braking oil level is abnormally low, consult your dealer.

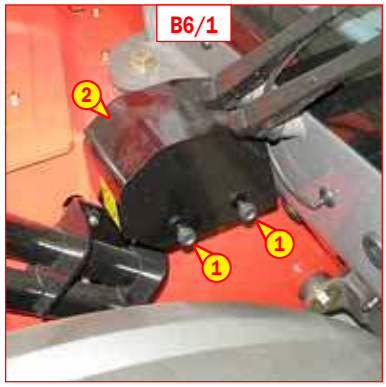

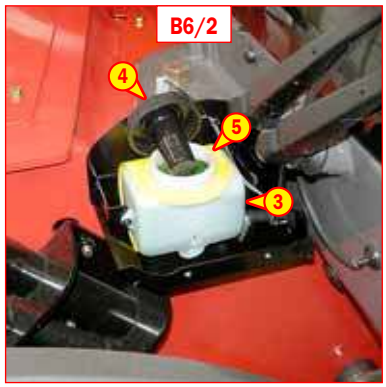

B7 - WINDSCREEN WASHER LIQUID LEVEL

CHECK

- Open the I.C. engine bonnet.
- Remove cap 1 (fig. B7).
- Visually check the level in tank 2 (fig. B7).
- If necessary add windscreen washer liquid (see: 3 - MAINTENANCE: LUBRICANTS AND FUEL) through filler port 3 (fig. B7).
- Replace the cap.

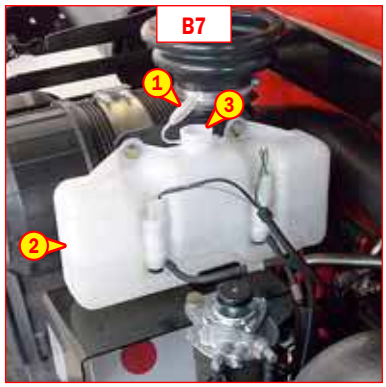

https://truckmanualshub.com/

B8 - CAB VENTILATION FILTER

CLEAN

- Lift out cabin ventilation filter 1 (fig. B8).
- Clean the filter with a compressed air jet.
- Check its condition and change if necessary (see: 3 - MAINTENANCE: FILTERS CARTRIDGES AND BELTS).
- Put the filter back into place.

https://truckmanualshub.com/

C - EVERY 250 HOURS OF SERVICE

Carry out the operations described previously as well as the following operations.

C1 - ALTERNATOR/FAN/CRANKSHAFT BELT TENSION

CHECK - ADJUST

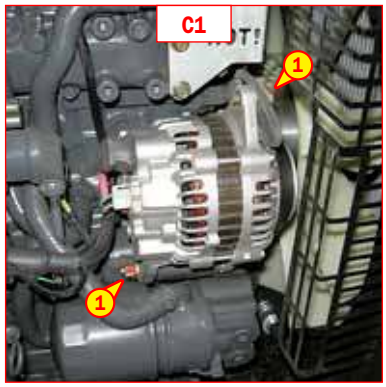

- Open the I.C. engine bonnet.
- Check the belt for signs of wear and cracks and change if necessary (see: 3 - MAINTENANCE: FILTERS CARTRIDGES AND BELTS).
- Check the belt tension between the pulleys of the crankshaft and of the alternator.
- Under a normal pressure exerted with the thumb (45 N), 10.1 lbf the belt should move approximately 10 mm (.39 in).
- Carry out adjustments if necessary.
- Untighten screws 1 (fig. C1) by two to three thread turns.
- Swivel the alternator assembly so as to obtain the belt tension required.
- Retighten screws 1 (fig. C1) (tightening torque 22 N.m) 16.2 lbf/ft.

If the compressor belt has to be changed, check the tension again after the first 20 hours of operation.

C2 - COMPRESSOR BELT TENSION (OPTION AIR CONDITIONING)

CHECK - ADJUST

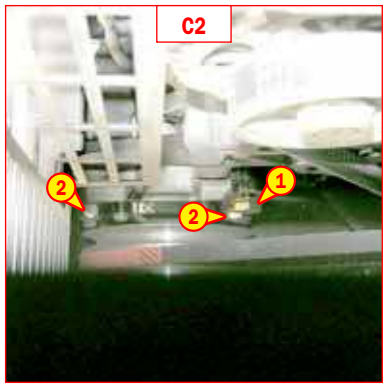

- Open the I.C. engine bonnet.
- Check the belt for signs of wear and cracks and change if necessary (see: 3 - MAINTENANCE: FILTERS CARTRIDGES AND BELTS).
- Check the belt tension between the pulley of the crankshaft and of the compressor.
- Under a normal pressure exerted with the thumb (45 N), the belt should move approximately 10 mm (.39 in).
- Carry out adjustments if necessary.
- Untighten screw 1 and nuts 2 (fig. C2) by two to three thread turns.
- Swivel the alternator assembly so as to obtain the belt tension required.
- Retighten screw 1 and nuts 2 (fig. C2) (tightening torque 22 N.m) 16.2 lbf/ft.

If the compressor belt has to be changed, check the tension again after the first 20 hours of operation.

C3 - FUEL WATER TRAP

DRAIN

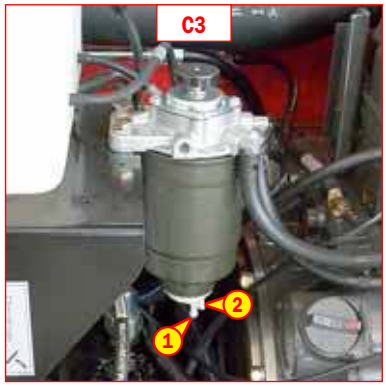

The water trap serves to stop the water contained in the fuel, it is incorporated within the fuel filter.

- Open the I.C. engine bonnet.
- Place a receptacle under drain port 1 (fig. C3).
- Unscrew ring 2 (fig. C3) by two or three thread turns to drain the water from the water trap.
- Retighten ring 2 (fig. C3).

C4 - CAB VENTILATION FILTER

CHANGE

- Lift out cab ventilation filter 1 (fig. C4) and replace it with a new one (see: 3 - MAINTENANCE: FILTERS AND BELTS).

https://truckmanualshub.com/

C5 - TRANSFER BOX OIL LEVEL

CHECK

Place the lift truck on level ground with the I.C. engine stopped.

- Remove the access panel 1 (fig. C5/1).
- Remove level plug 2 (fig. C5/2). The oil should be flush with the edge of the hole.
- If necessary, add oil (see: 3 - MAINTENANCE: LUBRICANTS AND FUEL) by the same hole.
- Replace and tighten the level plug 2 (fig. C5/2) (tightening torque 34 to 49 N.m) 25 - 36 lbf/ft.
- Refit access panel 1 (fig. C5/1).

C6 - FRONT AXLE DIFFERENTIAL OIL LEVEL

CHECK

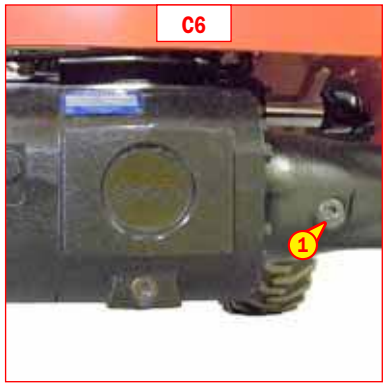

Place the lift truck on level ground with the I.C. engine stopped.

- Remove level plug 1 (fig. C6). The oil should be flush with the edge of the hole.
- If necessary, add oil (see: 3 - MAINTENANCE: LUBRICANTS AND FUEL) by the same hole.
- Replace and tighten the level plug 1 (fig. C6)(tightening torque 34 to 49 N.m)25-36 lbf/ft

C7 - REAR AXLE DIFFERENTIAL OIL LEVEL

CHECK

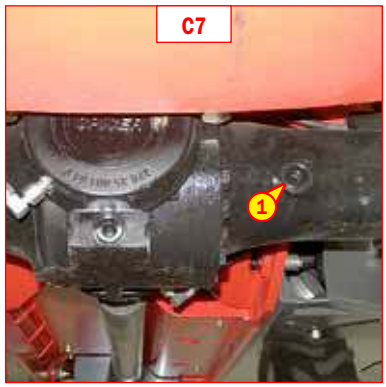

Place the lift truck on level ground with the I.C. engine stopped.

- Remove level plug 1 (fig. C7). The oil should be flush with the edge of the hole.
- If necessary, add oil (see: 3 - MAINTENANCE: LUBRICANTS AND FUEL) by the same hole.
- Replace and tighten the level plug 1 (fig.C7)(tightening torque 34 to 49 N.m).25-36lbf/ft

C8 - FRONT AND REAR WHEELS REDUCERS OIL LEVEL

CHECK

Place the lift truck on level ground with the I.C. engine stopped.

- Check the level on each wheel reducer.
- Place level plug 1 (fig. C8) in the horizontal position.
- Remove the level plug ; the oil should be flush with the edge of the hole.
- If necessary, add oil (see: 3 - MAINTENANCE: LUBRICANTS AND FUEL) by the same hole.
- Refit and tighten the level plug (tightening torque 34 to 49 N.m)25-36 lbf/ft.

https://truckmanualshub.com/

D - EVERY 500 HOURS SERVICE

Carry out the operations described previously as well as the following operations.

D1 - I.C. ENGINE OIL

DRAIN

D2 - I.C. ENGINE OIL FILTER

CHANGE

Place the lift truck on level ground, let the I.C. engine run at idle for a few minutes, then stop the I.C. engine.

DRAINING THE OIL

- Open the engine cover.
- Remove access panel 1 (fig. D1/1).
- Place a container under the drain plug and unscrew the drain plug 2 (fig. D1/2).
- Remove filler cap 3 (fig. D1/3) in order to ensure that the oil is drained properly.

Dispose of the drain oil in an ecological manner.

REPLACEMENT OF THE FILTER

- Unscrew and discard the I.C. engine oil filter 4 (fig. D1/2) as well as its seal.
- Clean the filter bracket with a clean, lint-free cloth.
- Lightly grease the new seal before refitting the new oil filter (see: 3 - MAINTENANCE: FILTERS AND BELTS) on its bracket.

Tighten the oil filter by hand pressure only and lock the filter in place by a quarter turn.

FILLING UP THE OIL

- Refit and tighten drain plug 2 (fig. D1/2).
- Fill up with oil (see: 3 - MAINTENANCE: LUBRICANTS AND FUEL) through filler port 5 (fig. D1/3).
- Wait a few minutes to allow the oil to flow into the sump.
- Start the I.C. engine and let it run for a few minutes.
- Check for possible leaks from the drain plug and the oil filter.
- Stop the I.C. engine, wait a few minutes and check the correct level on the dipstick 6 (fig. D1/3) between the two level marks.
- Top up the level if necessary.
- Refit access panel 1 (fig. D1/1).

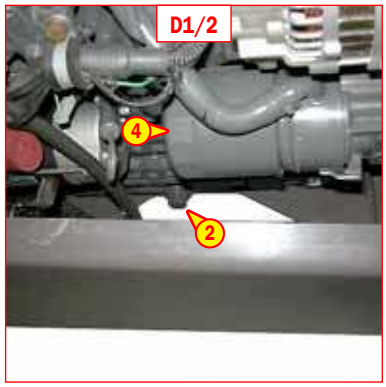

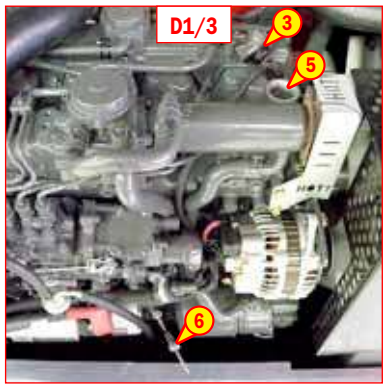

D3 - DRY AIR FILTER CARTRIDGE

CHANGE

In case of use in a heavily dust laden atmosphere, there are pre-filtration cartridges, see: 3 - MAINTENANCE: FILTERS CARTRIDGES AND BELTS. Also, the checking and cleaning periodicity of the cartridge must be reduced (up to 250 hours in a heavily laden dust atmosphere and with pre-filtration).

Change the cartridge in a clean location, with the I.C. engine stopped. Never operate the lift truck with the air filter removed or damaged.

- Open the I.C. engine bonnet.
- Loosen the bolts and remove cover 1 (fig. D3).
- Gently remove the cartridge 2 (fig. D3), taking care to avoid spilling the dust.
- Leave the safety cartridge in place.
- The following parts must be cleaned with a damp, clean lint-free cloth.
    - The inside of the filter and cover.
    - The inside of the filter inlet hose.
    - The gasket surfaces in the filter and in the cover.
- Check pipes and connections between the air filter and the I.C. engine and the connection and state of the clogging indicator on the filter.
- Before mounting check the condition of the new cartridge (see: 3 - MAINTENANCE: FILTERS CARTRIDGES AND BELTS).
- Introduce the cartridge into the filter axis and push it in, pressing the edges and not the middle.
- Reassemble the cover, guiding the valve downwards.

https://truckmanualshub.com/

D4 - FUEL FILTER

CHANGE

- Open the I.C. engine bonnet.
- Carefully clean the outside of the filter and its holder, to prevent dust from getting into the system.
- Unscrew filter 1 (fig. D4) and discard it after having recovered part 2 (fig. D4).
- Refit the assembly with a new filter (see: 3 - MAINTENANCE: FILTERS CARTRIDGES AND BELTS).
- Pressurise the circuit by means of the hand pump 3 (fig. D4).

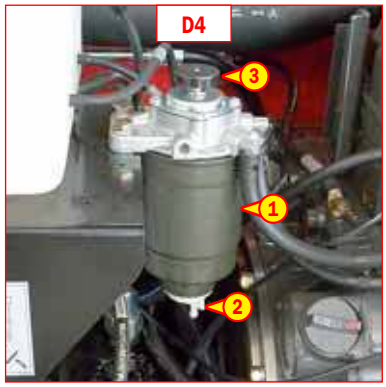

D5 - HYDRAULIC RETURN OIL FILTER CARTRIDGE

CHANGE

Stop the I.C. engine on level ground, with the jib raised and remove the pressure from the circuits by acting on the hydraulic controls.

Before carrying out any work, thoroughly clean the areas concerned by these maintenance operations.

- Remove plug 1 (fig. D5/1);
- Place a container under hydraulic return oil filter.
- Unscrew cover 2 (fig. D5/2).
- Wait a few seconds for the oil to flow into the container.
- Slowly take out filter cartridge assembly 3 and 4 (fig. D5/3).
- Separate the head 3 from the filter cartridge 4 (fig. D5/4) with a twisting motion.
- Refit the head onto a new cartridge (see: 3 - MAINTENANCE: FILTERS CARTRIDGES AND BELTS).
- Refit the assembly in place and retighten cover 2 (fig. D5/2).
- Put back cap 1 (fig. D5/1).

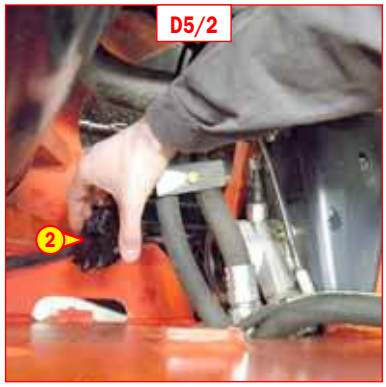

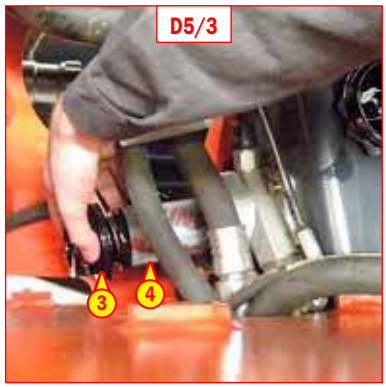

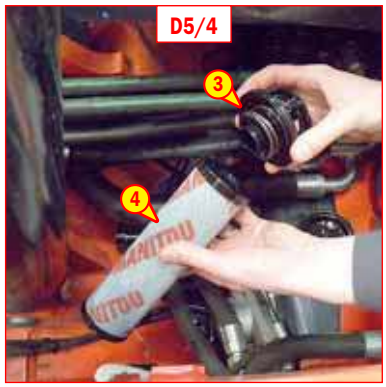

https://truckmanualshub.com/

D6 - TRANSFER BOX OIL

DRAIN

Place the lift truck on level ground with the I.C. engine stopped and the transfer box oil still warm.

Dispose of the drain oil in an ecological manner.

- Remove access panel 1 (fig. D6/1).
- Place a container under drain plug 2 (fig. D6/2) and unscrew the plug.
- Remove level and filling plug 3 (fig. D6/2) in order to ensure that the oil is drained properly.
- Refit and tighten drain plug 2 (fig. D6/2) (Tightening torque 34 to 49 N.m).
- Fill up with oil (see: 3 - MAINTENANCE: LUBRICANTS AND FUEL) through filler port 3 (fig. D6/2).
- The level is correct when the oil level is flush with the edge of the hole.
- Check for any possible leaks at the drain plug.
- Refit and tighten the level and filling plug 3 (fig. D6/2) (tightening torque 34 to 49 N.m).

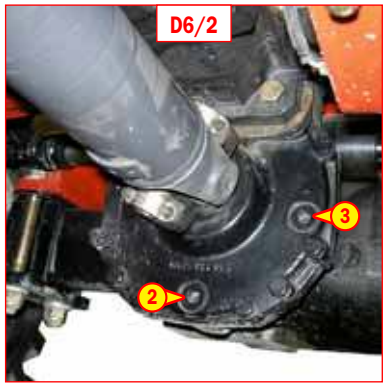

D7 - FRONT AXLE DIFFERENTIAL OIL

DRAIN

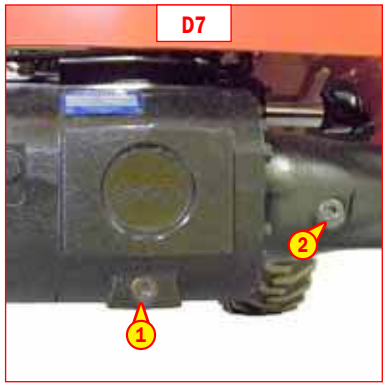

Place the lift truck on level ground with the I.C. engine stopped and the d oil still warm.

Dispose of the drain oil in an ecological manner.

- Place a container under drain plug 1 (fig. D7) and unscrew the plug.
- Remove level and filling plug 2 (fig. D7) in order to ensure that the oil is drained properly.
- Refit and tighten drain plug 1 (fig. D7) (tightening torque 34 to 49 N.m) 25-36 lbf/ft.
- Fill up with oil (see: 3 - MAINTENANCE: LUBRICANTS AND FUEL) through filler port 2 (fig. D7).
- The level is correct when the oil level is flush with the edge of the hole.
- Check for any possible leaks at the drain plug.
- Refit and tighten the level and filling plug 2 (fig. D7) (tightening torque 34 to 49 N.m) 25-36 lbf/ft.

https://truckmanualshub.com/

https://truckmanualshub.com/

E - EVERY 1000 HOURS OF SERVICE

Carry out the operations described previously as well as the following operations.

E1 - FUEL TANK

CLEAN

E1/1

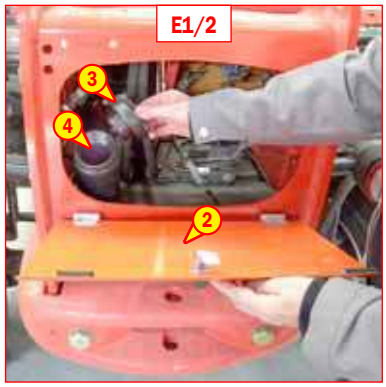

E1/2

While carrying out these operations, do not smoke or work near a flame.

Place the lift truck on level ground with the I.C. engine stopped.

- Inspect the parts susceptible to leaks in the fuel circuit and in the tank.
- In the event of a leak, contact your dealer.

Never try to carry out a weld or any other operation by yourself, this could provoke an explosion or a fire.

- Place a container under drain plug 1 (fig. E1/1) and unscrew the plug.
- Open access panel 2 (fig. E1/2).
- Remove filler plug 3 (fig. E1/2) in order to ensure that the oil is drained properly.
- Rinse out with ten litres of clean diesel through filler port 4 (fig. E1/2).
- Refit and tighten the drain plug (tightening torque 29 to 39 N.m) 21-29 lbf/ft.
- Fill the fuel tank with clean diesel filtered through the filler port.
- Refit the filler plug.
- Close the access panel.
- If necessary, bleed the fuel circuit (see: 3 - MAINTENANCE: G1 - FUEL SYSTEM).

E2 - SAFETY DRY AIR FILTER CARTRIDGE

CHANGE

E2

- For the disassembly and reassembly of the dry air filter cartridge, see: 3 - MAINTENANCE: D3 - AIR FILTER CARTRIDGE.
- Gently remove the dry air filter safety cartridge 1 (fig. E2), taking care to avoid spilling the dust.
- Clean the gasket surface on the filter with a damp, clean lint-free cloth.
- Check the condition of the new safety cartridge before fitting (see: 3 - MAINTENANCE: FILTERS AND BELTS).
- Insert the cartridge within the axis of the filter and push it home, pressing against the outer edge and not the centre.

NOTE: The safety cartridge changing frequency is given for information only. It must be changed for every two changes of the dry air filter cartridge.

https://truckmanualshub.com/

E3 - HYDRAULIC OIL

DRAIN

E4 - BRAKE ACCUMULATOR UNIT FILTER

CHANGE

Stop the I.C. engine on level ground, with the jib raised and remove the pressure from the circuits by acting on the hydraulic controls.

Before carrying out any work, thoroughly clean the areas concerned by these maintenance operations.

DRAINING THE OIL

- Place a container under drain plugs 1 (fig. E3/1) and unscrew them.
- Remove filler plug 2 (fig. E3/2) in order to ensure that the oil is drained properly.

Dispose of the drain oil in an ecological manner.

REPLACING THE BRAKE ACCUMULATOR UNIT FILTER

- Unscrew plug 3 (fig. E3/3), lift out the filter and fit a new one (see: 3 - MAINTENANCE: FILTERS CARTRIDGES AND BELTS).
- Refit and tighten plug 3 (fig. E3/3) (tightening torque 70 to 80 N.m) 52 - 59 lbf/ft.

FILLING UP THE OIL

- Refit and tighten drain plugs 1 (fig. E3/1) (tightening torque 29 to 39 N.m) 21-29 lbf/ft.
- Fill up with oil (see: 3 - MAINTENANCE: LUBRICANTS AND FUEL) through filler port 4 (fig. E3/2).

Use a clean container and funnel and clean the underside of the oil drum before filling.

- Observe the oil level on dipstick 5 (fig. E3/4), the oil level should be at the level of the red point.
- Check for any possible leaks at the drain plugs.
- Refit filler plug 2 (fig. E3/2).

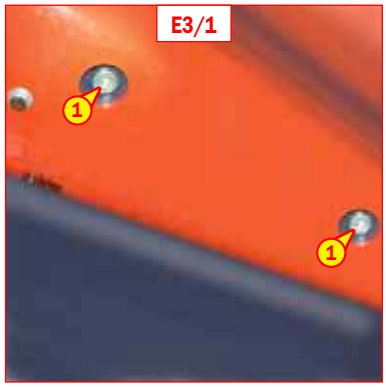

E3/1

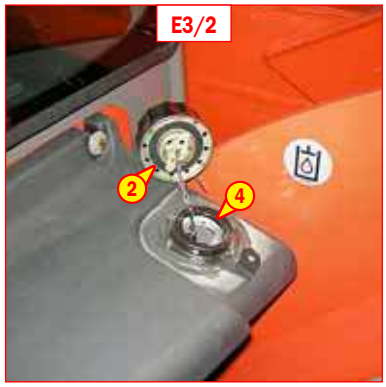

E3/2

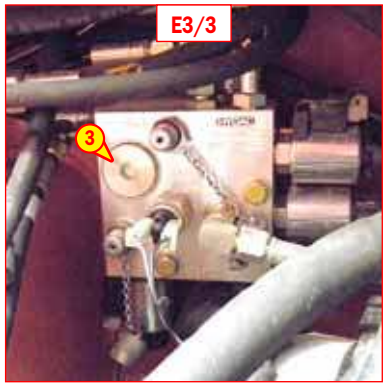

E3/3

E3/4

https://truckmanualshub.com/

E5 - SEAT BELT

CHECK

SEAT BELT WITH TWO ANCHORING POINTS
- Check the following points:
  - Fixing of the anchoring points on the seat.
  - Cleanness of the strap and the locking mechanism.
  - Triggering of the locking mechanism.
  - Condition of the strap (cuts, curled edges).

REELED SEAT BELT WITH TWO ANCHORING POINTS
- Check the points listed above together with the following points:
  - The correct winding of the belt.
  - Condition of the reel guards.
  - Roller locking mechanism when the strap is given a sharp tug.

NOTE: After an accident, replace the seat belt.

In no event should the lift truck be used if the seat belt is defective (fixing, locking, cuts, tears, etc.). Repair or replace the seat belt immediately.

E6 - REAR AXLE DIFFERENTIAL OIL

DRAIN

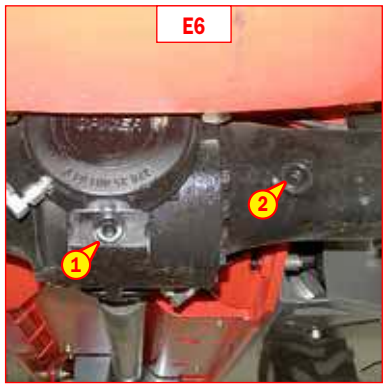

Place the lift truck on level ground with the I.C. engine stopped and the d oil still warm.

Dispose of the drain oil in an ecological manner.

- Place a container under drain plug 1 (fig. E6) and unscrew them.
- Remove level and filling plug 2 (fig. E6) to ensure that the oil is drained properly.
- Refit and tighten drain plug 1 (fig. E6) (tightening torque 34 to 49 N.m).
- Fill up with oil (see: 3 - MAINTENANCE: LUBRICANTS AND FUEL) through filler port 2 (fig. E6).
- The level is correct when the oil level is flush with the edge of the hole.
- Check for any possible leaks at the drain plug.
- Refit and tighten level and filling plug 2 (fig. E6) (tightening torque 34 to 49 N.m)25-36lbf/ft.

E7 - FRONT AND REAR WHEELS REDUCERS OIL

DRAIN

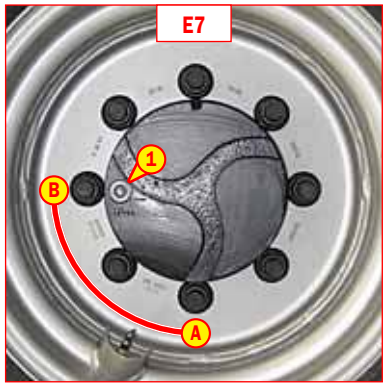

Place the lift truck on level ground with the I.C. engine stopped and the reducers oil still warm.

Dispose of the drain oil in an ecological manner.

- Drain and change the oil of each wheel reducer.
- Place drain plug 1 (fig. E7) in position A.
- Place a container under the drain plug and unscrew the plug.
- Let the oil drain fully.
- Place the drain port in position B, i.e. in a level port.
- Fill up with oil (see: 3 - MAINTENANCE: LUBRICANTS AND FUEL) through level port 1 (fig. E7).
- The level is correct when the oil level is flush with the edge of the hole.
- Refit and tighten the drain plug (tightening torque 34 to 49 N.m) 25-36-lbf/ft.

https://truckmanualshub.com/

https://truckmanualshub.com/

F - EVERY 2000 HOURS OF SERVICE

Carry out the operations described previously as well as the following operations.

F1 - COOLING LIQUID

DRAIN

These operations are to be carried out if necessary or every two years at the beginning of winter. Place the lift truck on level ground with the I.C. engine stopped and cold.

F1/1

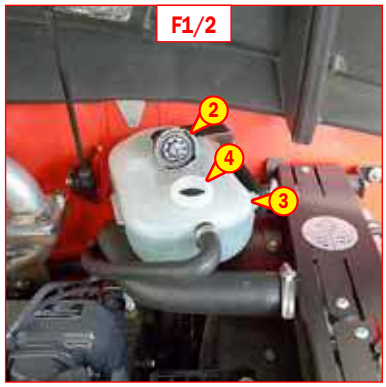

F1/2

DRAINING THE LIQUID
- Place a container under drain plug 1 (fig. F1/1) and unscrew the plug.
- Open the I.C. engine bonnet.
- Remove expansion pan filler plug 2 (fig. F1/2).
- Let the cooling circuit drain entirely while ensuring that the ports do not get clogged.
- Check the condition of the hoses as well as the fastening devices and change the hoses if necessary.
- Rinse the circuit with clean water and use a cleaning agent if necessary.

FILLING THE LIQUID
- Retighten drain plug 1 (fig. F1/1) (tightening torque 20 N.m) 15 lbf/ft.
- Slowly fill up the circuit with cooling liquid (see: 3 - MAINTENANCE: LUBRICANTS AND FUEL) to mid-height on expansion pan 3 (fig. 1/2) through filler port 4 (fig. F1/2).
- Put back filler plug 2 (fig. F1/2).
- Run the I.C. engine at idle for a few minutes.
- Check for any possible leaks.
- Check the level and refill if necessary.

The I.C. engine does not contain any corrosion resistor and must be filled during the whole year with a mixture containing 25 % of ethylene glycol-based antifreeze.

https://truckmanualshub.com/

CLEANING CONDENSER AND EVAPORATOR COILS (*)
CLEANING CONDENSATE TRAY AND RELIEF VALVE (*)
COLLECTING COOLANT TO REPLACE FILTER-DRIER (*)
REFILLING WITH COOLANT AND CHECKING THE THERMOSTATIC CONTROL AND PRESSURE SWITCHES (*)

NOTE: When opening the evaporator unit, remember to replace the cover seal.

(*): (CONSULT YOUR DEALER).

CAUTION: DO NOT ATTEMPT TO REPAIR ANY PROBLEMS YOURSELF. ALWAYS REFER TO YOUR DEALER WHEN REFILLING CIRCUITS, AS THEY HOLD THE CORRECT SPARE PARTS, AS WELL AS HAVING THE NECESSARY TECHNICAL KNOWLEDGE AND TOOLS.

- Do not open the circuit under any circumstances as this would cause the coolant to be lost.
- The cooling circuit contains a gas which can be dangerous under certain conditions. This gas, coolant R 134a, is colourless, odourless and heavier than air.

• If this gas is inhaled, take the victim into fresh air, give oxygen or artificial respiration if necessary and call a doctor.
• If the gas is in contact with the skin, wash it immediately under running water and remove any contaminated garments.
• If the gas is in contact with the eyes, rinse them in clear water for 15 minutes and call a doctor.

- The compressor has an oil level gauge (fig. F2). Never unscrew this gauge because it would depressurizes the installation. The oil level is only checked when changing the oil in the circuit.

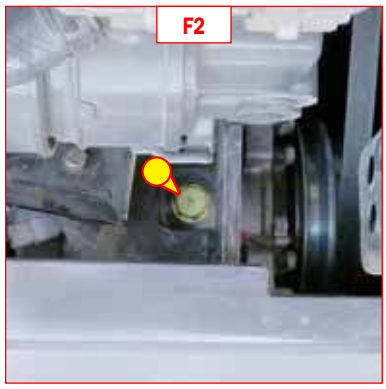

https://truckmanualshub.com/

G - OCCASIONAL MAINTENANCE

G1 - FUEL SYSTEM

BLEEDING

These operations are only to be carried out in the following cases:
- A component of the fuel system replaced or drained.
- A drained tank.
- Running out of fuel.

Ensure that the level of fuel in the tank is sufficient and bleed in the following order:

BLEEDING THE FUEL FILTER
- Open the I.C. engine bonnet.
- Place a receptacle under drain port 1 (fig. G1/1).
- Unscrew ring 2 (fig. G1/1) by two or three thread turns to drain the water from the water trap.
- Retighten ring 2 (fig. G1/1).

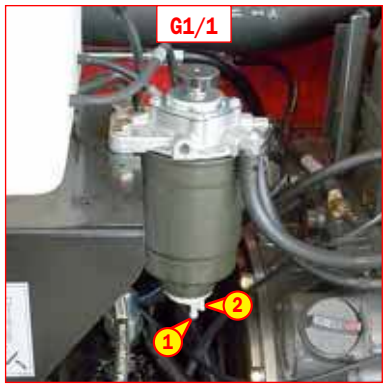

G1/1

BLEEDING THE INJECTION PUMP
- Untighten bleeder screw 3 (fig. G1/2) by two to three thread turns.
- Switch on the lift truck ignition until the diesel oil flows from the bleeder screw free of any air.
- Tighten the bleed screw while the diesel fuel is flowing out.

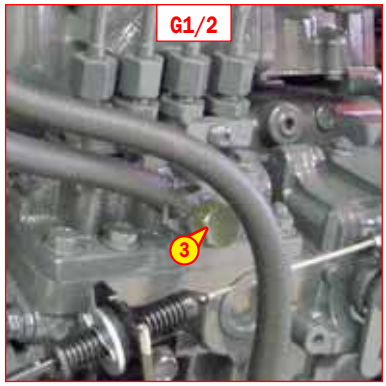

G1/2

The I.C. engine is ready to be started up.

NOTE: If the I.C. engine runs properly for a short time then stops or runs unevenly, check for possible leaks in the low pressure circuit. If in doubt, contact your dealer.

G2 - WHEEL

CHANGE

In the event of a wheel being changed on the public highway, ensure the following:

For this operation, we advise you to use the hydraulic jack MANITOU reference 505507 and the safety support MANITOU reference 554772.

- Stop the lift truck, if possible on even and hard ground.
- Stop the lift truck (see: 1 - OPERATING AND SAFETY INSTRUCTIONS: DRIVING INSTRUCTIONS UNLADEN AND LADEN).
- Put the warning lights on.
- Immobilise the lift truck in both directions on the axle opposite to the wheel to be changed.
- Unlock the nuts of the wheel to be changed.
- Place the jack under the flared axle tube, as near as possible to the wheel and adjust the jack (fig. G2/1).
- Lift the wheel until it comes off the ground and put in place the safety support under the axle (fig. G2/2).
- Completely unscrew the wheel nuts and remove them.
- Free the wheel by reciprocating movements and roll it to the side.
- Slip the new wheel on the wheel hub.
- Refit the nuts by hand, if necessary grease them.
- Remove the safety support and lower the lift truck with the jack.
- Tighten the wheel nuts with a torque wrench (see: 3 - MAINTENANCE: A - DAILY OR EVERY 10 HOURS OF SERVICE for tightening torque).

G2/1

G2/2

https://truckmanualshub.com/

G3 - FRONT HEADLAMPS

ADJUSTING

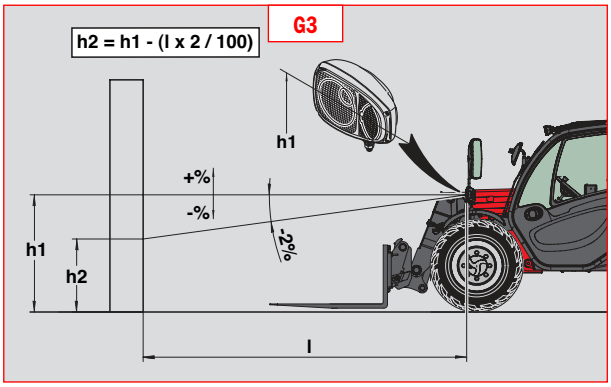

RECOMMENDED SETTING

(as per standard ECE-76/756 76/761 ECE20)

Set to - 2 % of the dipped beam in relation to the horizontal line of the headlamp.

ADJUSTING PROCEDURE

- Place the lift truck unloaded and in the transport position and perpendicular to a white wall on flat, level ground (fig. G3).
- Check the tyre pressures (see: 2 - DESCRIPTION: CHARACTERISTICS).
- Place the forward/reverse selector in neutral and release the parking brake.

Calculating the height of the dipped beam (h2)

- h1 = Height of the dipped beam in relation to the ground.
- h2 = Height of the adjusted beam.
- l = Distance between the dipped beam and the white wall.

G4 - BREAKDOWN OF BATTERY

CHANGE

- Open the I.C. engine bonnet.
- Bring a floating battery of the same type as the one used for the lift truck and battery cables.
- Connect the floating battery according to the correct polarity with the (-) on the engine earth 1 (fig. G4/1) and the (+) on the (+) of starter 2 (fig. G4/2).
- Start the lift truck and remove the cables as son as the I.C engine is running.
- Raise the jib.
- Lift out protective casing 3 (fig. G4/3).
- Replace battery 4 (fig. G4/4).

Handling and servicing a battery can be dangerous, take the following precautions:

- Wear protective goggles.
- Keep the battery horizontal.
- Never smoke or work near a naked flame.
- Work in a well-ventilated area.
- In the event of electrolyte being spilled onto the skin or splashed in the eyes, rinse thoroughly with cold water for 15 minutes and call a doctor.

https://truckmanualshub.com/

G5 - LIFT TRUCK

If the lift truck is not on horizontal ground, chock its wheels it to prevent it rolling down the slope.

The lift truck must be towed at very slow speed (less than 5 km/h) 3.1 mph over the shortest possible distance (less than 100 m) 328 ft.

For towing a lift truck, the high pressure limiters must be unlocked to avoid damaging the hydrostatic transmission, and the parking brake on the front axle must be released.

- Switch on lift truck ignition.
- Set the forward/reverse selector to neutral.
- Release the parking brake.

UNLOCKING THE HIGH PRESSURE LIMITERS
- Open the I.C. engine bonnet.
- Loosen nuts 1 (fig. G5/1) on the hydrostatic pump by no more than three turns.

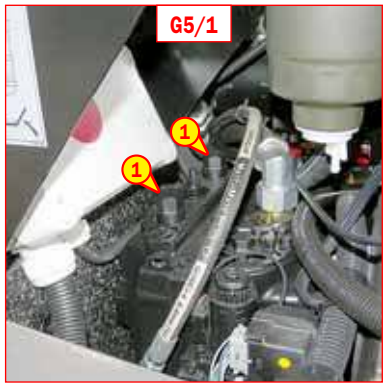

G5/1

RELEASING THE PARKING BRAKE ON THE FRONT AXLE
- Unscrew the screws 2 (fig. G5/2) on the front axle, remove the shims 3 (fig. G5/2) and fully retighten the screws 2 (fig. G5/2).

TOWING
- Switch on the warning lights.
- If the I.C. engine is not running there will be no steering or braking assistance. Operate the steering and pedal slowly avoiding sudden jerky movements.
- After towing, retighten screws 1 (fig. G5/1) (tightening torque 70 N.m) 51.6 lbf/ft.
- Unscrew the screws 2 (fig. G5/2), refit the 3 shims (fig. G5/2) and retighten the screws 2 (fig. G5/2) (tightening torque 95 - 115 N.m) 70-85 lbf/ft.

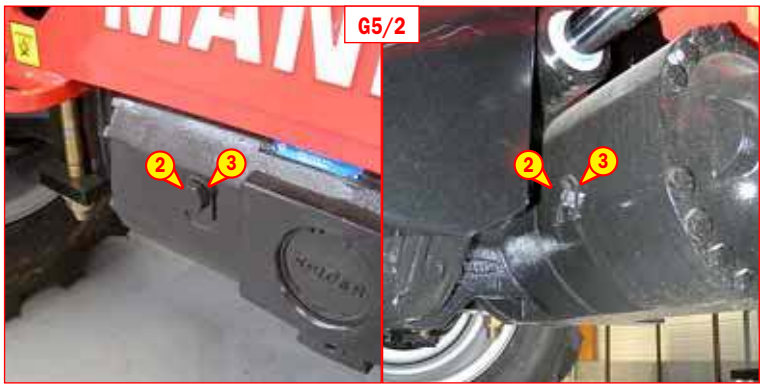

G5/2

G6 - LIFT TRUCK

- Take into account the position of the lift truck centre of gravity for lifting (fig. G6/1).
  A = 1,200 mm B = 1,100 mm
- Place the hooks in the fastening points provided (fig. G6/2 and G6/3).

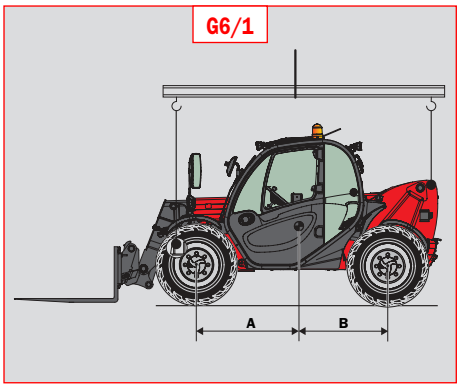

G6/1

G6/2

G6/3

https://truckmanualshub.com/

G7 - LIFT TRUCK ON A PLATFORM

Ensure that the safety instructions associated with the platform are complied with before loading the lift truck and that the driver of the carrier vehicle is informed of the dimensions and the weight of the lift truck (see: 2 - DESCRIPTION: CHARACTERISTICS).

Ensure that the platform is of sufficient size and load capacity for transporting the lift truck. Check also the allowable ground contact pressure of the platform relative to the lift truck.

For lift trucks equipped with a turbo-charged I.C. engine, block off the exhaust outlet to avoid rotation of the turbo shaft without lubrication when transporting the vehicle.

LOADING THE LIFT TRUCK

- Block the wheels of the platform.
- Attach the loading ramps to the platform in such a way as to give the shallowest possible ramp angle for the lift truck.
- Load the lift truck parallel to the platform.
- Stop the lift truck (see: 1 - OPERATING AND SAFETY INSTRUCTIONS: DRIVING INSTRUCTIONS UNLADEN AND LADEN).

STOWING THE LIFT TRUCK

- Fix the chocks to the platform at the front and at the rear of each tyre (fig. G7/1).
- Also fix the chocks to the platform on the inside of each tyre (fig. G7/2).
- Secure the lift truck to the platform at the anchoring points provided (fig. G7/3 and G7/4) with sufficiently strong ropes.
- Tighten the ropes (fig. G7/5).

G7/1

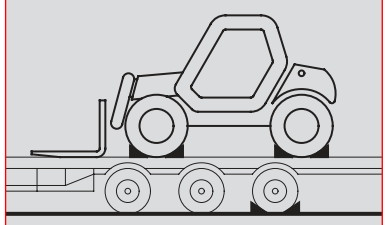

G7/2

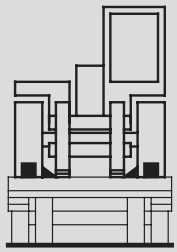

G7/3

G7/4

G7/5

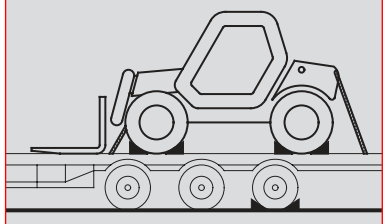

https://truckmanualshub.com/

https://truckmanualshub.com/

https://truckmanualshub.com/

4 - OPTIONAL ATTACHMENTS FOR USE WITH THE RANGE

https://truckmanualshub.com/

https://truckmanualshub.com/

TABLE OF CONTENTS

INTRODUCTION 4-5

PICKING UP THE ATTACHMENTS 4-6

TECHNICAL SPECIFICATIONS OF ATTACHMENTS 4-8

ATTACHMENT SHIELDS 4-10

https://truckmanualshub.com/

INTRODUCTION

- Your lift truck must be used with interchangeable equipment. These items are called: ATTACHMENTS.

- A wide range of attachments is available, guaranteed by MANITOU and designed to fit your lift truck perfectly.

- The attachments are delivered with a load chart concerning your lift truck. The operator's manual and the load chart should be kept in the places provided in the lift truck. For standard attachments, their use is governed by the instructions contained on this notice.

- Some particular uses require the adaptation of the attachment which is not provided in the price-listed options. Optional solutions exist, consult your dealer.

Suspended loads MUST be handled with a lift truck designed for that purpose (see: 1 - OPERATING AND SAFETY INSTRUCTIONS: LOAD HANDLING INSTRUCTIONS: H - TAKING-UP AND SETTING-DOWN A SUSPENDED LOAD).

Only attachments approved by MANITOU are to be used on our lift trucks (see: 4 - ADAPTABLE ATTACHMENTS IN OPTION ON THE RANGE: TECHNICAL SPECIFICATIONS OF ATTACHMENTS). The manufacturer shall not be liable for any modification or adaptation of an attachment made without its knowledge.

Depending on their size, certain attachments may, when the jib is lowered and retracted, come into contact with the front tyres and cause damage to them, if reverse tilt is activated in the forward tilt direction. TO PREVENT THIS RISK, EXTEND THE TELESCOPE TO A SUFFICIENT EXTENT FOR THE PARTICULAR LIFT TRUCK AND ATTACHMENT SO THAT THIS CONTACT IS NOT POSSIBLE.

Maximum loads are defined by the capacity of a lift truck taking account of the attachment's mass and centre of gravity. In the event of the attachment having less capacity than the lift truck, never exceed this limit.

https://truckmanualshub.com/

PICKING UP THE ATTACHMENTS

A - ATTACHMENT WITHOUT HYDRAULICS AND HAND LOCKING DEVICE

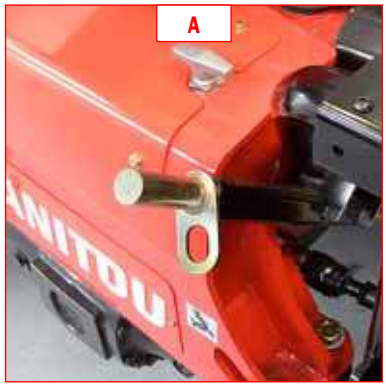

TAKING UP AN ATTACHMENT

- Ensure that the attachment is in a position facilitating the locking to the carriage. If it is not correctly oriented, take the necessary precautions in order to move it safely.
- Check that the locking pin and the clip are in position in the bracket (fig. A).
- Place the lift truck with the jib fully lowered in front of and parallel to the attachment, tilt the carriage forwards (fig. B).
- Bring the carriage under the locking tube of the attachment, slightly lift the jib, incline the carriage backwards in order to position the attachment (fig. C).
- Lift the attachment off the ground to facilitate locking.

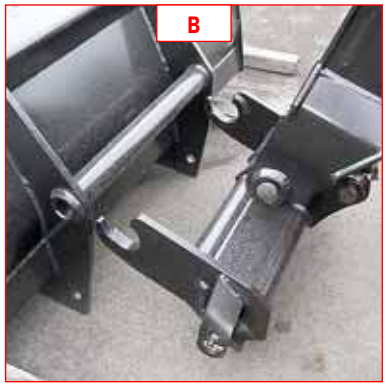

HAND LOCKING

- Take the locking pin and the clip on the bracket (fig. A) and lock the attachment (fig. D). Do not forget to refit the clip.

HAND RELEASING

- Proceed in the reverse order of paragraph HAND LOCKING while making sure you put back the locking pin and the clip in the bracket (fig. A).

LAYING AN ATTACHMENT

- Proceed in the reverse order of paragraph TAKING UP AN ATTACHMENT while making sure you place the attachment flat on the ground and in closed position.

https://truckmanualshub.com/

B - HYDRAULIC ATTACHMENT AND MANUAL LOCKING DEVICE

TAKING UP AN ATTACHMENT

- Ensure that the attachment is in a position facilitating the locking to the carriage. If it is not correctly oriented, take the necessary precautions in order to move it safely.
- Check that the locking pin and the clip are in position in the bracket (fig. A).
- Place the lift truck with the jib fully lowered in front of and parallel to the attachment, tilt the carriage forwards (fig. B).
- Bring the carriage under the locking tube of the attachment, slightly lift the jib, incline the carriage backwards in order to position the attachment (fig. C).
- Lift the attachment off the ground to facilitate locking.

MANUAL LOCKING AND CONNECTION OF THE ATTACHMENT

- Take the locking pin and the clip on the bracket (fig. A) and lock the attachment (fig. D). Do not forget to refit the clip.
- Stop the I.C. engine and keep the ignition on the lift truck.
- Release the pressure from the hydraulic circuit by pressing button 1 (fig. E) downwards 4 or 5 times.
- Connect the rapid connectors according to the logic of the attachment's hydraulic movements.

Make sure that the rapid connectors are clean and protect the holes which are not used, with the caps provided.

HAND RELEASING AND DISCONNECTING THE ATTACHMENT

- Proceed in the reverse order of paragraph HAND LOCKING AND CONNECTING THE ATTACHMENT while making sure you put back the locking pin and the clip in the bracket (fig. A).

LAYING AN ATTACHMENT

- Proceed in the reverse order of paragraph TAKING UP AN ATTACHMENT while making sure you place the attachment flat on the ground and in closed position.

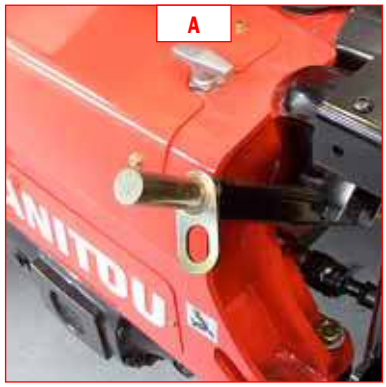

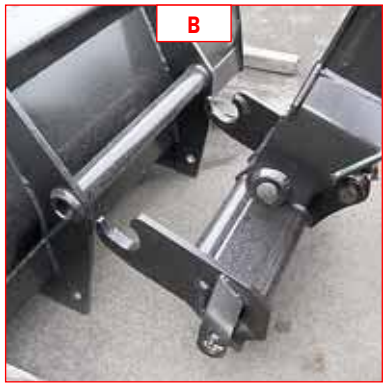

https://truckmanualshub.com/

https://truckmanualshub.com/

MAIN ÉLECTRIC SHEMATIC

pages

CODES ON ÉLECTRICAL SCHEMATIC..... . . . . .A3

CÂBLES LABELS ON THE ÉLECTRICAL HARNESS. A4

ELECTRICAL SCHÉMATIC

– MT 625 Turbo . . . . . .B

– MT 625 T COMFORT / MLT 625-75 H C

80

https://truckmanualshub.com/

https://truckmanualshub.com/

CODES ON ELECTRICAL SCHÉMATIC

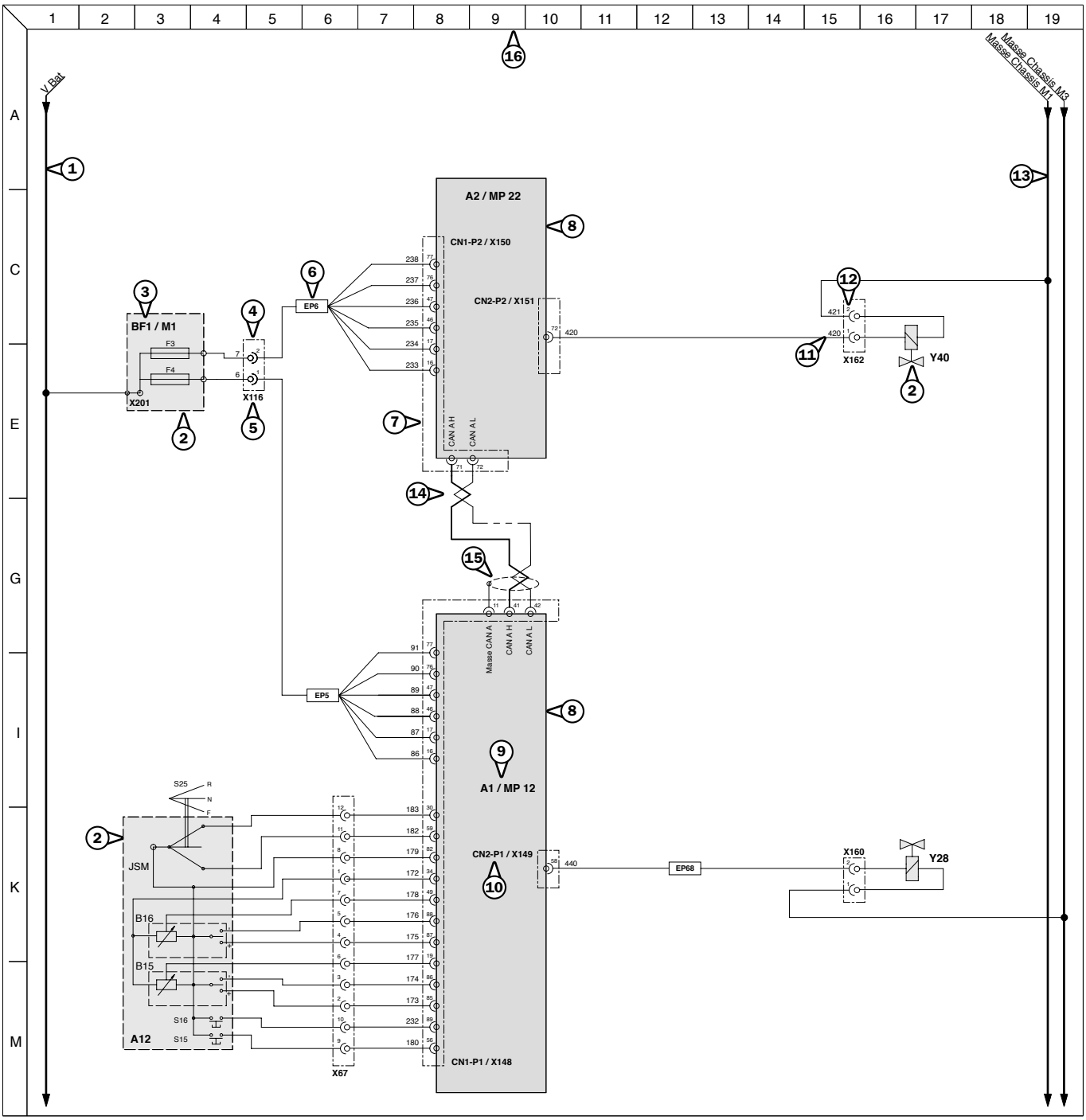

Example labeling of the câbles and the components on the wiring diagram.

Légende:

1 - Feed
2 - Electrical Component
3 - Description electrical component
4 - Electrical Connector
5 - Déscription electrical connector
6 - Splicing
7 - Connector ECU
8 - ECU
9 - Déscription ECU
10 - Déscription connector ECU
11 - Déscription N° wire
12 - Déscription N° PIN electrical connector
13 - Masses
14 - CAN
15 - Shield CAN
16 - Grid location

https://truckmanualshub.com/

CÂBLE LABELING ON THE ÉLECTRICAL HARNESS

Electric harness installed in the carriage are made with connectors.
In order to identify the conectors and their wires to which are attached, inscriptions are on each wire.

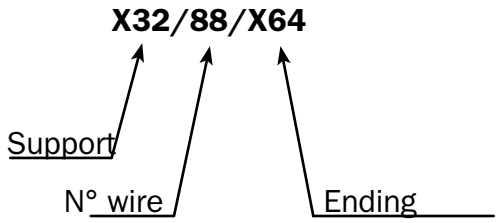

https://truckmanualshub.com/

MT 625 T COMFORT / MLT 625-75 H

pages

POSITION OF THE CONNECTORS PER SCHÉMATIC C3

ÉLECTRICAL SCHEMATIC PER FUNCTION :

1 - START / DIGICODE CLIENT C7
2 - CAN H-L / OUTLET OBD (DIAGNOSTIC). C11
3 - TRANSMISSION C15
4 - HYDRAULIC MOVEMENT. C19
5 - ILLUMINATION SIGNALS / VENTILATION. C23
6 - OPTIONS C29

https://truckmanualshub.com/

https://truckmanualshub.com/

POSITION OF THE CONNECTORS PER SCHÉMATIC

Connecteurs	Sch. 1	Sch. 2	Sch. 3	Sch. 4	Sch. 5	Sch. 6
X0	✔					
X1	✔					
X2	✔					
X3	✔					
X4	✔					
X6					✔	
X8	✔					
X11					✔	
X12					✔	
X13	✔	✔			✔	
X14					✔	
X17					✔	
X18					✔	
X19	✔	✔				
X20					✔	
X21					✔	
X22					✔	
X25					✔	
X26					✔	
X27					✔	
X28					✔	
X29						✔
X30						✔
X31					✔	
X32					✔	
X35					✔	
X36					✔	
X37					✔	
X38					✔	
X39					✔	
X40					✔	
X41					✔	
X46					✔	
X47					✔	
X50					✔	
X56	✔	✔		✔		
X57	✔	✔		✔		
X58		✔				
X59					✔	
X62			✔			
X63					✔	
X64					✔	
X65			✔			
X66			✔		✔	
X67			✔	✔	✔	
X91						✔

https://truckmanualshub.com/

Connecteurs	Sch. 1	Sch. 2	Sch. 3	Sch. 4	Sch. 5	Sch. 6
X92			✔			
X93						✔
X94						✔
X95						✔
X99		✔				
X100				✔		
X103					✔	
X104					✔	
X105					✔	
X106					✔	✔
X107					✔	
X114			✔			
X115	✔	✔				
X118	✔					
X133					✔	
X134				✔		
X138	✔					
X139			✔			
X153						✔
X154						✔
X155						✔
X166						✔
X204						✔
X205						✔
X260			✔			
X261			✔			
X264				✔		
X265				✔		
X266				✔		
X267				✔		
X268				✔		✔
X269				✔		
X270				✔		
X274				✔		✔
X275				✔		
X276					✔	✔
X277					✔	✔
X286						✔
X289	✔					
X290	✔					
X291					✔	
X292			✔		✔	
X294			✔			
X295	✔	✔	✔	✔	✔	
X299	✔	✔				
X300	✔	✔	✔	✔	✔	✔
X302			✔			
X303	✔	✔	✔	✔	✔	✔
X304	✔	✔	✔	✔	✔	✔

https://truckmanualshub.com/

Connecteurs	Sch. 1	Sch. 2	Sch. 3	Sch. 4	Sch. 5	Sch. 6
X305				✔		✔
X308				✔	✔	✔
X309			✔		✔	
X310	✔	✔	✔	✔	✔	✔
X311				✔		✔
X312				✔	✔	✔
X313				✔	✔	✔
X314				✔	✔	✔
X315				✔		✔
X316						✔
X322						✔
X321	✔	✔	✔	✔	✔	✔
X324					✔	
X326						✔
X327						✔
X330						✔
X331					✔	✔
X358					✔	
X360						✔
X362						✔
X363				✔		✔
X365						✔
X367						✔
X368				✔		
X370				✔		
X372						✔
X373			✔			
X374				✔		
X375				✔		
X376		✔				
X377				✔		
X378			✔		✔	
X381				✔	✔	
X382					✔	
X383				✔	✔	
X385				✔		
X386				✔		

https://truckmanualshub.com/

https://truckmanualshub.com/

1 - START / DIGICODE CLIENT

Connectors					
Harness type	**Rep.**	**Comp. Name**	**Déscription**	**Position on schématic**	**Correspondance hydraulic**
	X0	S1	Battery Cut off	S8	
Châssis	X1	S2	4-way switch key	A11	
Châssis	X2	S2	6-way switch key	A15	
Moteur	X3	R1	Préheating	Q9	
Motor	X4	M1	Starter Sollénoïde	Q6	
Motor	X8	Y1/Y2	Engine stop elctrovalves	S11	
Châssis	X13	A1	Dashboard unit	I40	
Châssis/Motor	X1		Interface Châssis/Engine	O29	
Châssis	X56	A3	ECU hydraulic	M30	
Châssis	X57	A3	ECU hydraulic	M39	
Châssis	X115	PAD	Diagnostic oulet	O39	
Châssis	X118	A6	Digicode client	I5	
Châssis	X138	S50	Emergency Stop	A7	
Moteur	X289	G2	Alternator 12V/80A	O13	
Moteur	X290	G2	Supply alternator	O14	
Moteur	X295	A2	ECU transmission	M24	
Moteur	X299	A2	ECU transmission	M27	
Châssis/Moteur	X310		Interface Châssis/Engine	K13	

Components			
Rep.	**Déscription**	**Position on schématic**	**Correspondance hydraulique**
A1	Dashboard unit	E24	
A2	ECU transmission	M28	
A3	ECU hydraulic	M36	
A6	Digicode client	K8	
G1	Battery 12V/110Ah	O8	
G2	Alternator 12V/80A	Q13	
M1	Start solenoid	Q6	
P1	Hour Meter	G40	
P2	Diesel Gauge Unit	G37	
PAD	Diagnostic Outlet	O39	
R1	Preheating Résistance	S9	
S1	Battery cut off	S8	
S2	Key switch	A11	
S50	Emergency stop	A7	
Y1	Engine stop electrovalve 1 (continued)	S11	
Y2	Engine stop electrovalve 2 (appel)	S13	

https://truckmanualshub.com/

Fuses and relays		
Rep.	**Déscription**	**Position on schématic**
BF1/M1		
F41	Open	M13
F42	Key switch (60A)	M14
F43	Alternator (80A)	M14
F44	Cabin Fuse box (+BAT) (50A)	M15
F45	Défigeur Diesel (option) (20A)	M15
F46	Préheating (40A)	M15
BF1/M2		
F55	Start Solénoïde (20AZ	M11
K20	Préheat Relays	M8
BF2/M1		
F1	Dashboard Alimentation (+apc) (7,5A)	C23
F2	Diesel pump + EV Engine Stop Maint. + excitation alternator (5A)	C23
F3	Digicode + Diagnostic oulet (5A)	C24
F7	ECU Hydraulic (15 A)	C25
BF2/M2		
F33	Digicode + Diagnostic outlet (5A)	C36
BF2/M4		
K7	Start Relay linked to digicode	E15

Splices	
Rep.	**Position on schématic**
Ep.1	O11
Ep.7	K29

https://truckmanualshub.com/

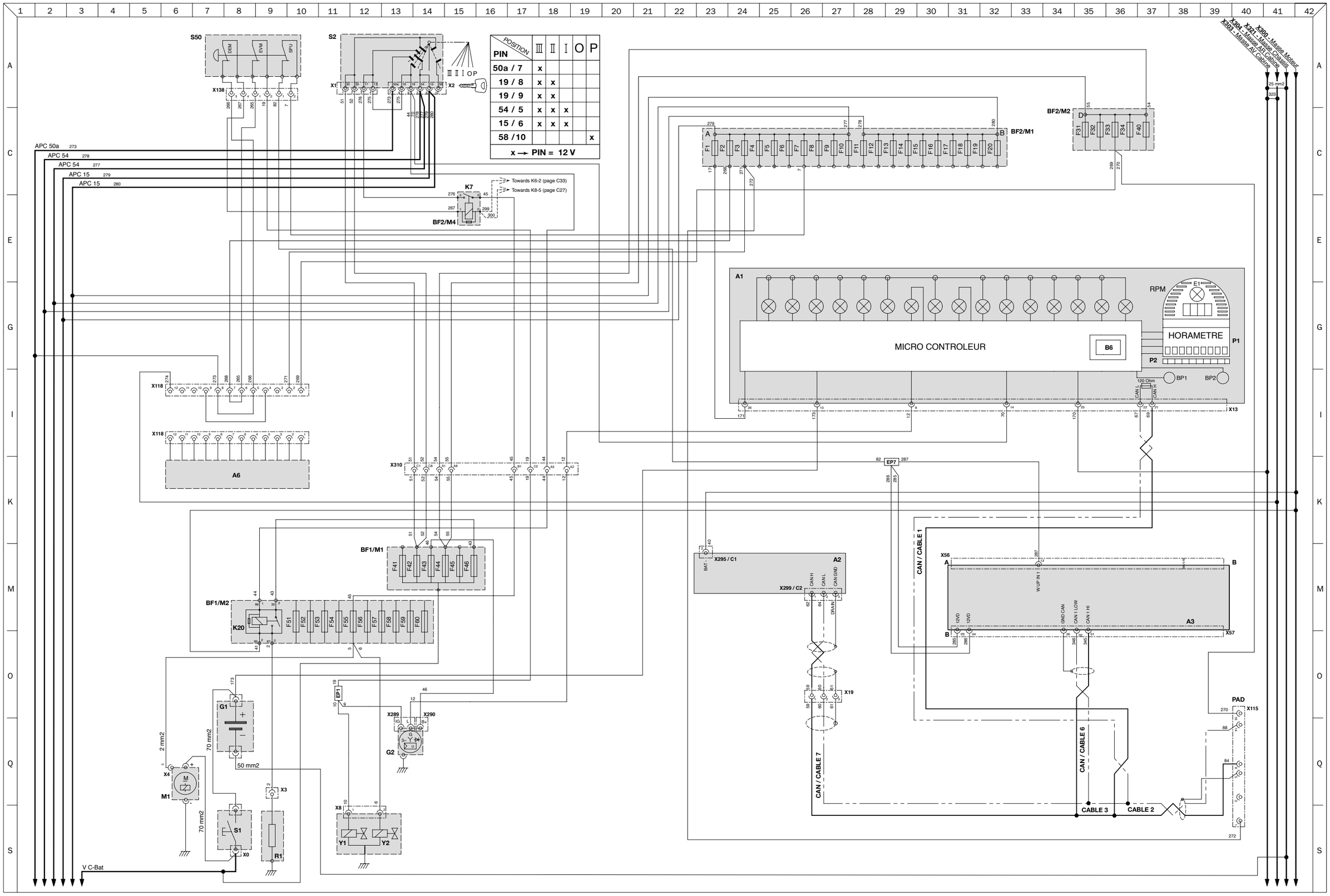

POSITION / PIN	III	II	I	O	P
50a / 7	x				
19 / 8	x	x			
19 / 9	x	x			
54 / 5	x	x	x		
15 / 6	x	x	x		
58 /10					x
x → PIN = 12 V					

80

https://truckmanualshub.com/

https://truckmanualshub.com/

2 - CAN H-L / OUTLET OBD (DIAGNOSTIC)

Connectors					
Harness Type	**Rep.**	**Comp. Name**	**Déscription**	**Position on schématic**	**Correspondance hydraulique**
Châssis	X13	A1	Dashboard unit	I31	
Châssis/Moteur	X19		Interface Châssis/Engine	O21	
Châssis	X56	A3	ECU hydraulic	M30	
Châssis	X57	A3	ECU hydraulic	M39	
Châssis	X58	A5	Longitudinal Security unit	C37	
Châssis	X99	A11	Gauge Vishay	M22	
Châssis	X115	PAD	Diagnostic outlet	O36	
Châssis	X276	A11	Gauge Vishay	M22	
Moteur	X295	A2	ECU transmission	M16	
Moteur	X299	A2	ECU transmission	M19	
Châssis/Moteur	X310		Interface Châssis/Engine	K8	

Components			
Rep.	**Déscription**	**Position on schématic**	**Correspondance hydraulique**
A1	Dashboard unit	E16	
A2	ECU transmission	M20	
A3	ECU hydraulic	M27	
A5	Longitudinal Security Unit	C38	
A11	Gauge Vishay	M22	
P1	Hourmeter unit	G31	
P2	Diesel Gauge Unit	G28	
PAD	Diagnostic outlet	O36	

Fuses and relays		
Rep.	**Déscription**	**Position on schématic**
BF1/M1		
F44	Cabine Fuse Box (+BAT) (50A)	M8
BF2/M1		
F1	Dashboard Alimentation (+apc) (7,5A)	C15
F2	Pump GO + Engine stop Electrovalve	C15
F3	Digicode + diagnostic outlet(5A)	C15
F4	ECU transmission + Seat contact + JSM (10A)	C16
F7	ECU hydraulic (10A)	C18
F19	Alimentation BUS-BAR C (F27/F28/F29/F30) (30A)	C23
BF2/M2		
F33	Digicode + diagnostic outlet (5A)	C29
F36	Alimentation micro controler ECU hydraulic (+perm) (2A)	C30

https://truckmanualshub.com/

Splices	
Rep.	**Position on schématic**
Ep.12	O30
Ep.13	E11
Ep.17	K31

https://truckmanualshub.com/

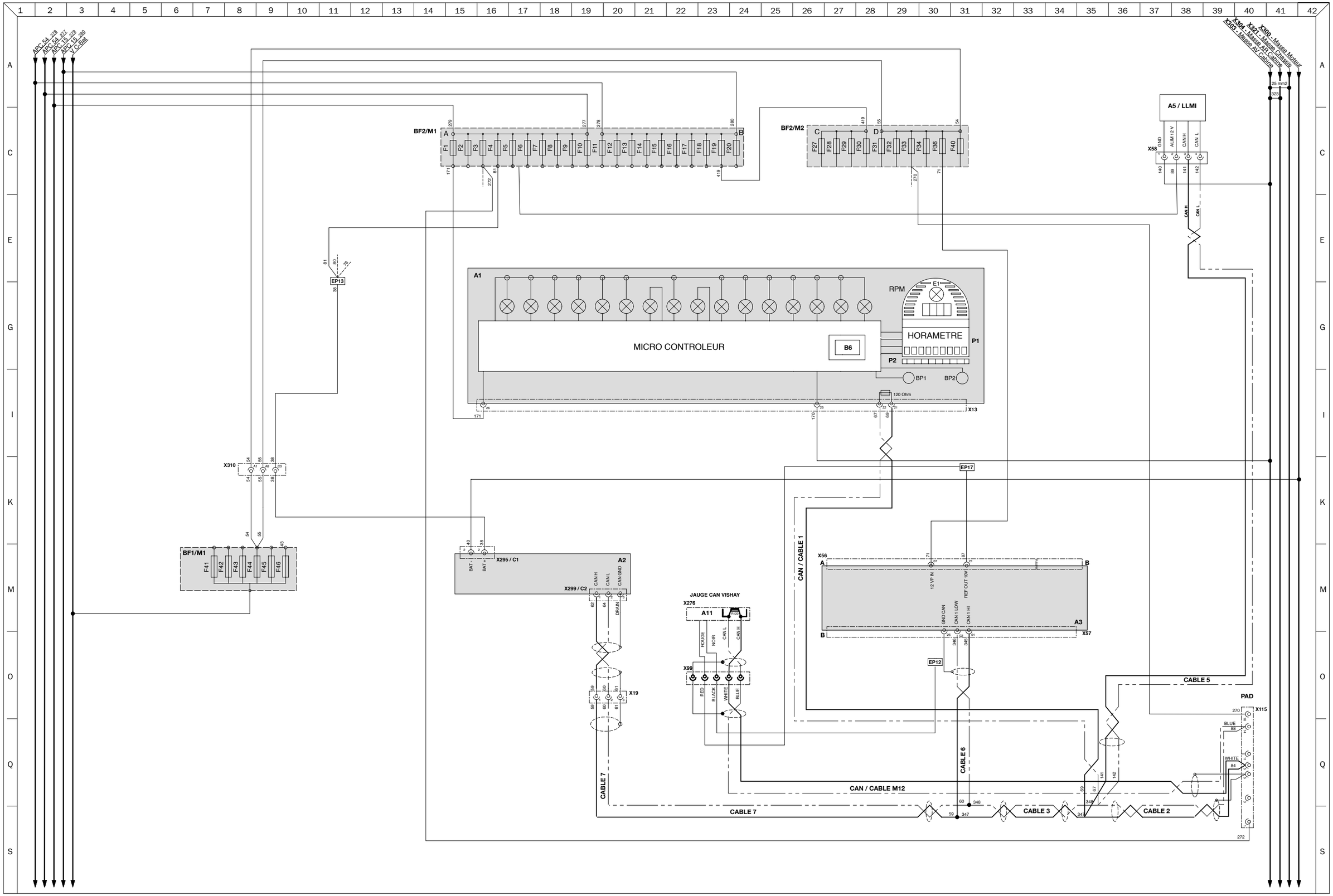

https://truckmanualshub.com/

https://truckmanualshub.com/

3 - TRANSMISSION

Connectors					
Harness Type	**Rep.**	**Comp. Name**	**Déscription**	**Position on schématic**	**Correspondance hydraulique**
	X62	B14	Hydraulic pump speed sensor	O7	
	X65	B21	Front wheel alignment sensor	G5	
Châssis	X66	B12	Rear wheel alignment sensor	G3	
Châssis	X67	A4	JSM (Joystick Switch and Move)	C7	
Châssis	X92	Y13	Negative brake electrovalve	M16	
	X114	S51	Off pedal sensor	M8	
Châssis	X139	B9	Angle inching pedal sensor	O10	
Engine	X260	Y6	Electrovalve proportional 2P engine hydrostatic	Q13	
Engine	X261	Y7	Electrovalve BDP (Brake Pressure Defit)	Q15	
Engine	X292	A2	ECU transmission	I9	
Châssis	X294	S13	Low speed switch mode/High speed	A16	
Engine	X295	A2	ECU transmission	I3	
Châssis	X302	S15	Negative parking brake switch	E16	
Châssis	X309	H24	Rear wheel alignment indicatores	E3	
Châssis/Engine	X310		Interface Châssis/Engine G10/K12		
Option	X373	B13	Hydrostatic motor speed sensor	G6	
	X378	H35	Rear wheel alignment indicator	E4	

Composants			
Rep.	**Désignation**	**Position sur schéma**	**Correspondance hydraulique**
A2	ECU transmission	I16	
A4	JSM (Joystick Switch and Move)	A12	
B9	Inching pedal angle sensor redundant	Q11	
B12	Rear wheel alignment sensor	G3	
B13	Hydrostatic motor speed sensor	G6	
B14	Hydraulic pump speed sensor	Q6	
B15	Roller 1 sur JSM (Télescope)	A9	
B16	Roller 2 sur JSM (Accessories)	A9	
B21	Front wheel alignment sensor	E4	
H13	High speed indicator (GV)	C16	
H15	Parking brake Control Indicator	G16	
H24	Rear wheel alignment indicator	E3	
H35	Front wheel alignment indicator	E5	
S4	Sélector FNR (Forward/Neutre/Reverse	A11	
S13	Slow speed/high speed mode switch	A16	
S15	Negative parking brake switch	E16	
S51	Off pedal sensor	M8	
Y3	Forward proportional electrovalve	O3	
Y4	Reverse proportional Electrovalve	O4	
Y6	Electrovalve proportional 2P hydrostatic engine	Q13	
Y7	Electrovalve BDP (Brake Pressure Defit)	Q15	
Y13	Negative brake Electrovalve	O17	

https://truckmanualshub.com/

Fuses & relays		
Rep.	**Déscription**	**Position on schématic**
BF2/M1		
F4	ECU transmission + Seat contact + JSM (10A)	A3
F10	Sensor + wheel alignment light (2A)	A4
BF2/M5		
K2	Relay reverse light & buzzer (20A/35A)	G13

Splices	
Rep.	**Position on schématic**
Ep.9	K11
Ep.10	K10
Ep.13	E7
Ep.14	K18

https://truckmanualshub.com/

Electric Schématic «Transmission»

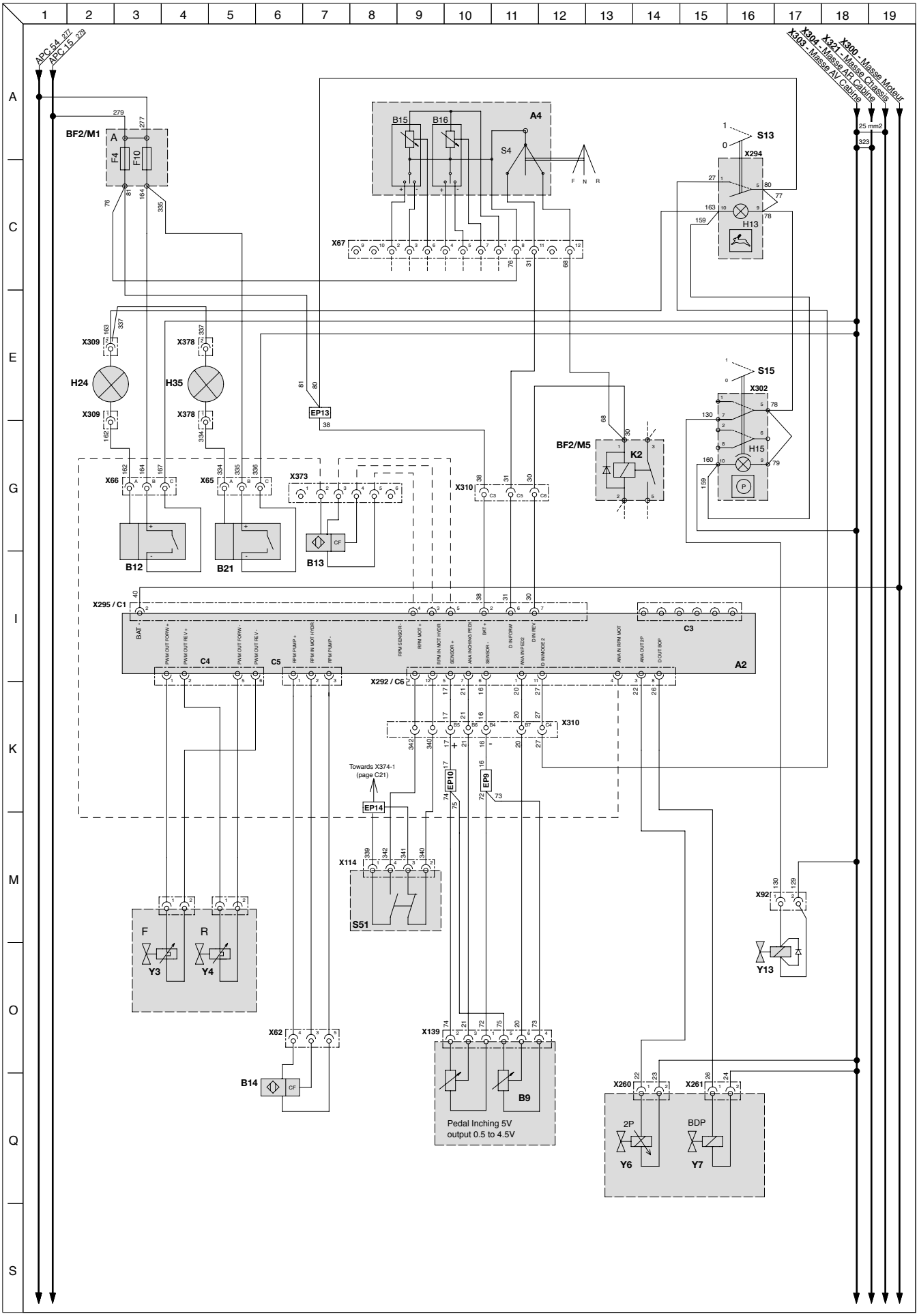

https://truckmanualshub.com/

4 - MOVEMENTS HYDRAULICOS

Connectors					
Harness Type	**Rep.**	**Name of component**	**Déscription**	**Position sur schéma**	**Correspondance hydraulique**
Châssis	X56	A3	ECU hydraulic	K31	
Châssis	X57	A3	ECU hydraulic	K31	
Châssis	X67	A4	JSM (Joystick Switch and Move)	C17	
Châssis	X100	B11	Redundant jib angle Potentiomètre	C27	
Châssis	X134	S34	No jib retraction sensor	I25	
Châssis	X264	Y8	Telescope direction Electrovalve + ou -	Q32	
Châssis	X265	Y9	Electrovalve accessory direction + ou -	Q35	
Châssis	X266	Y10	Pilot Electrovalve hydraulic proportional (Télescope)	Q36	
Châssis	X267	Y11	Pilot Electrovalve hydraulic proportional (Accessory)	Q37	
Châssis	X269	Y12	Electrovalve hydraulic cutoff (TUV)	Q31	
Châssis	X270	Y14	Descent cutoff Electrovalve (option cutoff aggravating movements)	Q18	
Châssis	X274	S5/S6	Seat Contactors	A13	
Châssis	X275	Y15	Tilt cutoff Electrovalve (option coupure aggravating movements)	O17	
Moteur	X295	A2	ECU transmission	K15	
Châssis	X305	S31	Hydraulic movements cutoff shunt switch/ surcharge	I21	
Châssis	X308	S16	Warning switch	M7	
Châssis/Moteur	X310		Interface Châssis/Engine	I12	
Châssis	X311	S14	Hydraulic cutoff switch (TUV)	M23	
Châssis	X312	S18	Rear Fog Lamp Switch	O5	
Châssis	X313	S19	Beacon Switch	Q7	
Châssis	X314	S20	Front working lights switch /front+rear	Q12	
Châssis	X315	S21	Rear defrost switch	M11	
Châssis	X363	S22	jib head electrovalve switch	I8	
Châssis	X368	S46	Accessory Line Decompression control	C36	
Châssis	X370		Accessory line flow switch	C34	
Châssis	X374		Tilt nuetral switch	G5	
Châssis	X375	S52	Accessory line decompression Button	G5	
Châssis	X377	Y18	Jib head Electrovalve	S16	
Châssis	X381		Prédisposition ventilation control	O25	
Châssis	X383	S45	Flow switch accessory line	A35	
Châssis	X385	Y19	Speed Electrovalve (TS) Fan Drive	Q24	
Châssis	X386	Y20	Direction Electrovalve (SV) Fan Drive	Q26	

https://truckmanualshub.com/

Components			
Rep.	**Déscription**	**Position on schématic**	**Correspondance hydraulique**
A2	ECU transmission	K2	
A3	ECU hydraulic	K30	
A4	JSM (Joystick Switch and Move)	A21	
B11	Redundant boom angel Potentiomètre	C35	
B15	Roller 1 sur JSM (Télescope)	A18	
B16	Roller 2 sur JSM (Accessory)	A19	
D4	Diode	O22	
H14	Hydraulic movement cutoff indicator (TUV)	O23	
H16	Warning indicator	M7	
H18	Rear fog light control indicator	Q4	
H19	Beacon indicator control	S7	
H20	Front/Rear Work lights control indicator	Q11	
H21	Rear defrost control indicator	O12	
H22	Boom head electrovalve indicator	I8	
H31	Security shunt indicator surcharge	K22	
H52	Accessory line indicator	I5	
S4	Sélector FNR (Forward/Neutre/Reverse)	A20	
S5	Seat Contact NO	C12	
S6	Seat Contact NF	C13	
S14	Hydraulic cutoff switch (TUV)	M24	
S16	Warning Switch	M6	
S18	Rear fog light switch	O	
S19	Beacon Switch	Q7	
S20	Work lights switch front/front+rear	Q11	
S21	Rear defrost switch	M11	
S22	Head Boom électrovalve switch	I8	
S31	Switch shunt cutoff movements hydraulic/surcharge	I22	
S34	NO boom retraction sensor	K24	
S45	Accessory Flow line Sélector	A35	
S46	Accessory line decompression control	C36	
S52	Accessory line décompression button	G5	
Y8	Electrovalve télescope direction + ou	Q32	
Y9	Electrovalve accessory direction + ou	Q34	
Y10	Hydraulic proportional Electrovalve pilotage (Télescope)	Q36	
Y11	Hydraulic proportional Electrovalve pilotage (Accessoire)	Q37	
Y12	Hydraulic cutoff Electrovalve (TUV)	S22	
Y14	Descent cutoff Electrovalve (option aggraviated movements cutoff)	S17	
Y15	Tilt cutoff Electrovalve (option aggraviated movements cutoff)	M17	
Y18	Boom head Electrovalve	S16	
Y19	Speed Electrovalve (TS) Fan Drive	Q24	
Y20	Electrovalve direction (SV) Fan Drive	Q26	

https://truckmanualshub.com/

Fuses & relays		
Rep.	**Déscription**	**Position on schématic**
BF2/M1		
F4	ECU transmission + seat contact + JSM (10A)	C6
F6	Seat Contact + sensor supply boom angle retract (10A)	C6
F7	ECU hydraulic (10A)	C6
F8	Shunt movements cutoff / boom retract sensor / feed sécurity ECU (10A)	C7
F16	Electrovalve boom head (7,5A)	C7
BF2/M5		
K2	Reverse light and buzzer (20A/35A)	M32
K4	Movements cutoff relay (20A/35A)	K28

Splices	
Rep.	**Position on schématic**
Ep.5	E29
Ep.6	E13
Ep.8	C20
Ep.11	C18
Ep.12	G26
Ep.15	K33
Ep.24	Q18
Ep.25	C19

https://truckmanuals.hub.com/

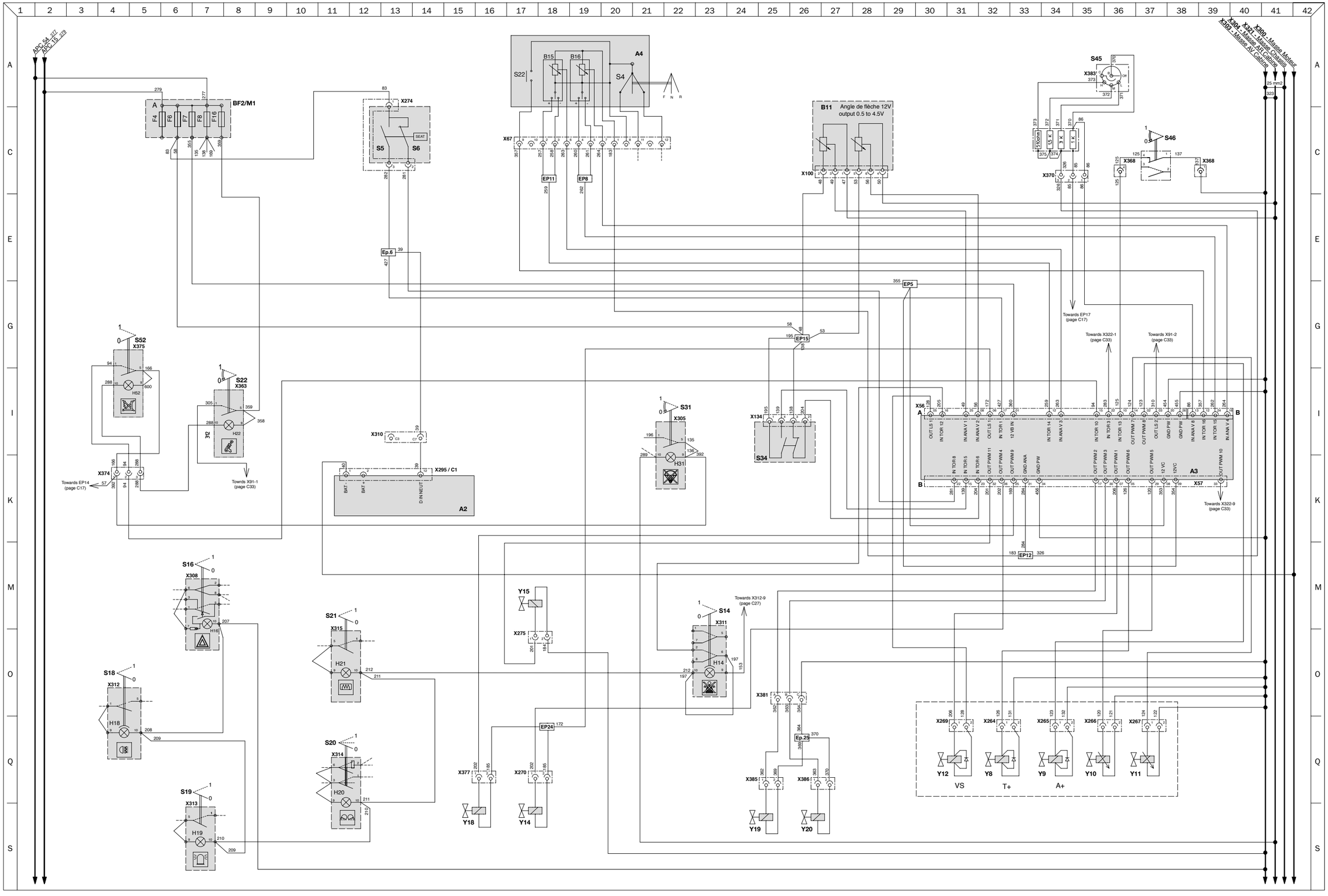

https://truckmanualshub.com/

https://truckmanualshub.com/

5 - LIGHTING SYSTEMS / VENTILATION

Connecteurs					
Harness Type	**Rep.**	**Name of component**	**Déscription**	**Position on schématic**	**Correspondance hydraulique**
Cabine 1	X6	E15	Beacon outlet	S25/S26	
Châssis	X11	S28	Wiper handle	M36	
Châssis	X12		Wiper handle	O36	
Châssis	X13	A1	Dashboard unit	C39	
Châssis	X14	S26 / S27	Light handle	C13	
Moteur	X17	B3	Engine oil pressure switch	E33	
Moteur	X18	B5	Thermocontact engine water	E34	
	X20	B35	Clogged air filter	G32	
Châssis	X21	B7	Clogged hydraulic filtre Colmatage	E31	
Châssis	X22	S11	Brake fluid level sensor	E30/G30	
Châssis	X25	M6	Front Wiper Motor	Q34	
Châssis	X26		Interconnection chassis harness/front wiper pump	Q31	
	X27	M5	Front wiper pump	S31	
Option	X28	M8	Rear wiper pump	S33	
Châssis	X31		Rear left light	Q10	
Châssis	X32		Rear right light	Q13	
Châssis	X35		Front light left	I11	
Châssis	X36		Front right light	I15	
Châssis	X37	E7	Minéralogic lighting plate (TUV 25Km/h)	Q9	
Châssis	X38	B1	Back up alarm	Q16	
Châssis	X39	B2	Main Alarm Warning	I13	
Châssis	X40	PER	Electric towing outlet	Q18	
	X41	S28	Wiping handle	O37	
Châssis	X46	S30	Cigarrete lighter	O5	
Châssis	X47	S30	Cigarrete lighter	O6	
Cabine 2	X50	E16	Ceiling light	O30	
Cabine 1	X59	M7	Rear Wiper motor	Q29	
Châssis	X63	B34	Fuel Gauge	E38/G38	
Châssis	X64	B8	Master cylinder Pressure switch	M12/O12	
	X65	B21	Front wheel alignment Sensor	S21	
Châssis	X66	B12	Rear Wheel alignment sensor	Q23	
Châssis	X67	A4	JSM (Joystick Switch and Move)	G37	
	X103	E19	Boom Work lights	A10	
	X104	E19	Boom work lights	A8	
Châssis	X105		Foot boom work lights Option	A4/A7	
Châssis	X106		Foot boom prédisposition électric option	C4	
Cabine 2	X107	M4	Roof Wiper Motor	M31	
Châssis	X133	B10	Negative brake info Pressure switch	E27/E28	
Châssis/Cabine 1	X276		Interface Châssis/Cabine 1	Q25	
Châssis/Cabine 2	X277		Interface Châssis/Cabine 2	K29	
Moteur	X291	B4	Engine water temp. sensor	E35	
Moteur	X292	A2	ECU transmission	I32	
Moteur	X295	A2	ECU transmission	I34	
Châssis	X308	S16	Warning switch	A20	
Châssis	X309	H24	Rear wheel alignment indicator	O22/Q22	

https://truckmanualshub.com/

Connectors					
Harness Type	**Rep.**	**Name of component**	**Déscription**	**Position on schématic**	**Correspondance hydraulique**
Châssis/Moteur	X310		Interface Châssis/Engine	E34/I3/I35/I31	
Châssis	X312	S18	Rear fog light switch	M16	
Châssis	X313	S19	Beacon Switch	O25	
Châssis	X314	S20	Front Work light switch/front+rear	M27	
	X324	S42	Foot boom work lights switch	A6	
Cabine 1	X331		Rear work lights	Q29	
	X358		Boom work lights	A9	
	X378	H35	Front wheel alignment indicator	O20	
	X382		Prédisposition ventilation régulation	G24	
	X383	S53	Ventilation régulation switch	G24	

Components			
Rep.	**Déscription**	**Position on schématic**	**Correspondance hydraulique**
A1	Dashboard unit	A38	
A2	ECU transmission	G33	
A4	JSM (Joystick Switch and Move)	I40	
B1	Back up alarm	S16	
B2	Main buzzer warning	I13	
B3	Engine oil Pressure switch	G33	
B4	Engine water temperature Sensor	G36	
B5	Engine water thermocontact	G34	
B6	Dashboard failure buzzer	A35	
B7	Clogg hydraulic filter	G31	
B8	Master cylinder pressure switch	O12	
B10	Negative brake info Pressure switch	G27	
B12	Rear wheel alignment sensor	S22	
B15	Roller 1 sur JSM (Télescope)	G40	
B16	Roller 2 sur JSM (Accessory)	G40	
B21	Front wheel sensor	S20	
B34	Fuel Gauge	E39	
B35	Clogged air	G32	
D1	Diode	C6	
D2	Diode	M28	
D5	Diode	A5	
E2	Back up light	S14	
E3	Stop light right/left	S12/S14	
E4	Rear fog light	S11	
E6	Illumination cigarette lighter	O6	
E7	Illumination plate minéralogic (TUV 25Km/h)	S9	
E8	Front/Rear left Night lights	I10/S11	
E9	Front/Rear right night lights	I16/S14	
E10	Front and Rear Left blinkers	I11/S10	
E11	Front and Rear Right blinkers	I17/S13	
E12	Codes right and left	I10/I16	
E13	Lights Right/Left	I10/I16	
E15	Beacon	S27	

https://truckmanualshub.com/

Components			
Rep.	**Déscription**	**Position on schématic**	**Correspondance hydraulique**
E16	Roof Ligh	O29	
E19	Boom work lights	A8/A10	
H1	Batery charge indicator	A24	
H2	Active negative brake indicator	A25	
H3	Engine oil pressure indicator	A25	
H4	Engine water temp. indicator	A26	
H5	Hydraulic filter clogging indicator	A27	
H6	Container brake fluid level indicator	A28	
H7	High beam	A28	
H8	Turn signal indicator	A29	
H9	Fault indicator ECU downgrade mode	A30	
H10	Réserve fuel Indicator	A31	
H16	Warning indicator	C21	
H18	Rear fog light control indicator	O16	
H19	Beacon Indicator control	O24	
H20	Work light front/rear indicator control	O27	
H24	Rear wheel alignment indicator	Q22	
H25	General Fault indicator	A32	
H26	Clogged air filter indicator	A32	
H27	Préheating indicator	A33	
H28	Forward indicator	A34	
H29	Neutral indicator	A35	
H30	Reverse indicator	A35	
H35	Rear wheel alignment indicator	Q20	
H42	Foot boom light control indicator	C6	
H53	Regulation ventilation control indicator control	I25	
M3	Beacon Motor	S27	
M4	Roof Motor wiper	O31	
M5	Front wiper pump motor	S31	
M6	Front motor wiper	S35	
M7	Rear wiper Motor	S29	
M8	Rear wiper pump	S32	
P1	Hourmeter unit	A39	
P2	Diesel gauge unit	C36	
PER	Electric tow outlet	S20	
S4	Sélector FNR (Forward/Neutre/Reverse)	I39	
S11	Brake fluid level sensor	G29	
S16	Warning switch	A20	
S18	Rear fog light switch	M16	
S19	Beacon switch	M24	
S20	Front/front+rear work lights switch	M26	
S25	Roof light switch control	O29	
S26	Horn control	A16	
S27	Illumination handle	C15	
S28	Wiper handle	S38	
S29	Roof wiper Handle	M32	
S30	Cigarette lighter control Commande	O7	
S42	Foot boom light switch	A6	

https://truckmanualshub.com/

Components			
Rep.	**Déscription**	**Position on schématic**	**Correspondance hydraulique**
S53	Regulation ventilation control switch	G25	

Fuses & relays		
Rep.	**Déscription**	**Position on schématic**
	BF1/M1	
F44	Cabine fuse box (+BAT) (50A)	I5
	BF2/M1	
F1	Feed dashboard (+apc) (7,5A)	M5
F4	ECU transmission + seat contact + JSM (10A)	M5
F5	Cigarette lighter + info autoradio (10A)	M5
F9	Feed K2 + K3 (reverse light + reverse buzzer + stop light) (5A)	M5
F10	Sensor + lamp wheel alignment (2A)	M5
F11	Central blinker (feed + APC) (15A)	M5
F12	Rear fog light switch	K5
F13	Boom work lights switch (15A maxi)	K5
F14	Beacon (7,5A)	K5
F17	Rear wiper control + Roof wiper + rear wiper (15A)	K5
F18	Front wiper control + windshield washer (15A)	K5
F20	Heater (20A)	K5
	BF2/M2	
F21	Left Night lights feed + cigarette lighter light feed (3A)	G5
F22	Right night light feed + Hydrauilc pilot illumination button + dashboard illumination (3A)	G5
F23	Feed codes (15A)	G5
F24	Light feed (15A)	G5
F25	Right blinkers feed (7,5A)	G5
F26	Left blinkers feed (7,5A)	G5
F31	Illumination Handle (25A)	E5
F32	Warning + centrale blinking (alim+bat) (15A)	E5
F34	Horn + roof light + dashboard (7,5A)	E5
F37	Rear Motor wiper (+perm) (10A)	E5
F38	Front Motor wiper (+perm) (15A)	E5
	BF2/M3	
K10	Air condition time relay	A17
	BF2/M4	
K8	Centrale blinker	C18

Splices	
Rep.	**Position on schématic**
Ep.18	E39
Ep.39	M32

https://truckmanualshub.com/

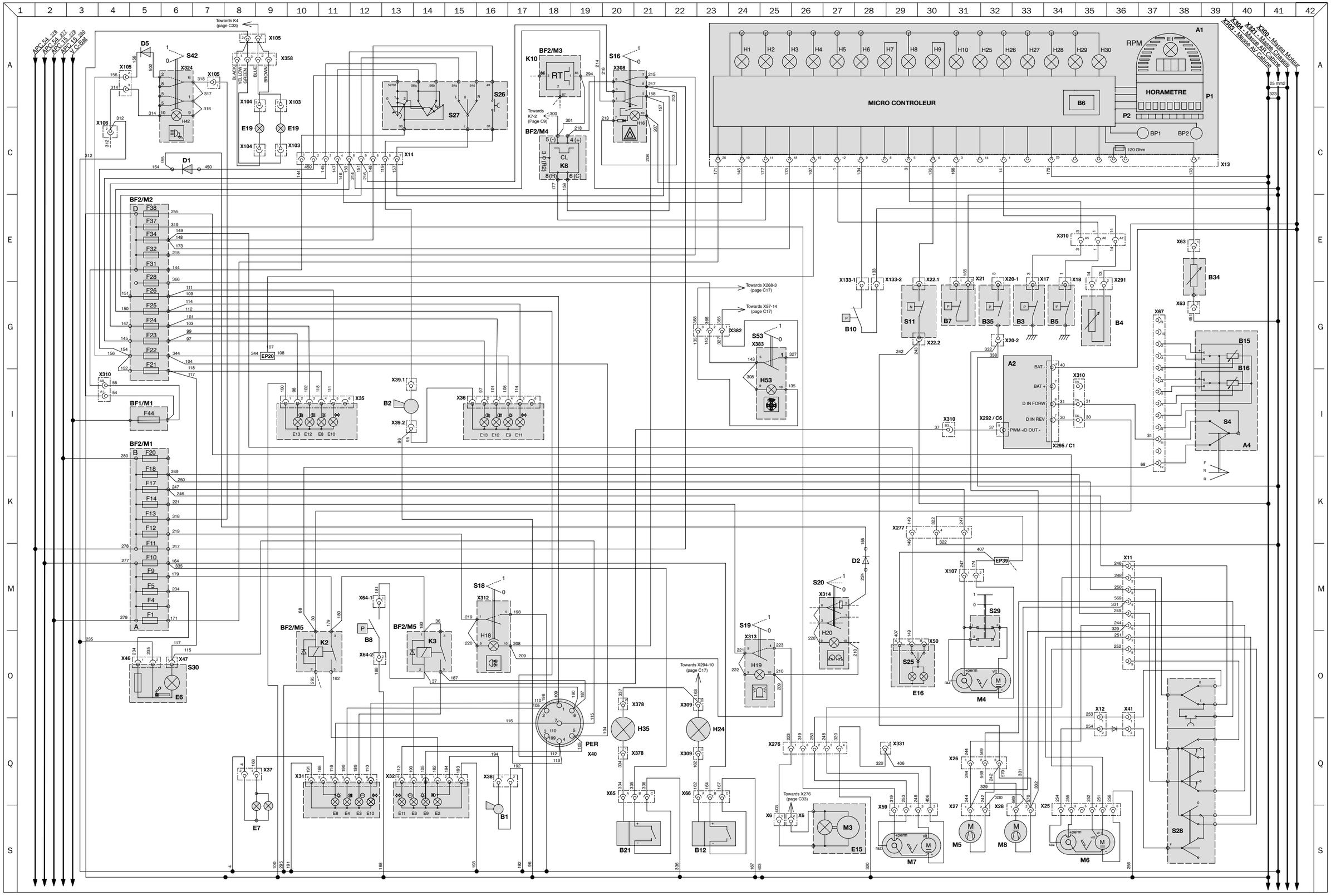

80

https://truckmanualshub.com/

https://truckmanualshub.com/

6 - OPTIONS

Connectors					
Harness Type	**Rep.**	**Name of component**	**Déscription**	**Position on schématic**	**Correspondance hydraulique**
Châssis	X29		Heater Ventilator / air condition	E38	
Châssis	X91		Boom head electrovalve Option	Q20	
Châssis	X93	A7	Autoradio feed	E13	
Châssis	X94	A7	Speaker autoradio	E16	
Châssis	X95		Option Air condition	M35	
Châssis	X105		Foot boom work lights Option	K25	
Châssis	X106		Foot boom prédisposition électric	M24	
	X153	A10	Bloc condenser	O35	
	X154	A10	Bloc condenser	O36	
Châssis	X155	A9	Air condition harness option	G35	
	X166	Y17	Head boom Electrovalve	Q19	
Châssis	X204	HPD	Right speaker	C14/C16	
Châssis	X205	HPG	Left speaker	E16	
Châssis	X268		Accessory shunt	M18	
Option	X274	S44/M11	Seat Contactor	C26	
Châssis/Cabine 1	X276		Interface Châssis/Cabine 1	M9/Q8	
Châssis/Cabine 2	X277		Interface Châssis/Cabine 2	M14/Q15	
Châssis	X285	M9	Ventilator	E38	
Châssis	X286	S24	Ventilation control	E37	
Châssis	X305	S31	Cutoff movements hydraulic switch shunt/ surcharge	I19	
Châssis	X308	S16	Warning switch	Q4	
Châssis/Moteur	X310		Interface Châssis/Engine	G5/M29	
Châssis	X311	S14	hydraulic cutoff switch (TUV)	I16	
Châssis	X312	S18	Rear fog lamp switch	M4	
Châssis	X313	S19	Beacon Switch	I4	
Châssis	X314	S20	Work light switch front/front + rear	I7	
Châssis	X315	S21	Rear window defrost switch	I14	
Cabine 2	X316	R6	Rear window defrost	M15/O15	
Châssis	X322	S12	Forward forced switch	I22	
	X326	S23	Air condition control switch	C35	
	X327	B18	Air condition evaporator thermostat	E34	
Cabine 1	X330	E18	Work lights front, right and left	O10	
Cabine 1	X331	E17	Work lights rear, right and left	M8/O8	
	X360	S22	Line accessory lock switch	O18/O27/Q19	
	X362	S32	Electric boom prédisposition switch	O25	
	X363	S22	Line accessory lock switch	O20	
Châssis	X365		Interconnection harness chassis/blue headlights harness poultry	G7	
Option	X367	S43	Blue lights poultry switch	E10	
Option	X372	S33	Accessory lock switch	M20	

https://truckmanualshub.com/

Components			
Rep.	**Déscription**	**Position on schématic**	**Correspondance hydraulic**
A3	ECU hydraulic	G20	
A7	Autoradio	G15	
A9	Cooling Block	C38	
A10	Condenser Block	Q36	
B17	Evaporator probe	G33	
B18	Evaporateur cooling Thermostat	E33	
B20	Binary Pressureswitch (HP/BP) climate	Q36	
D1	Diode	I10	
D2	Diode	I10	
D3	Diode	K34	
D4	Diode	K15	
E17	Rear right and left working lights	O8/O9	
E18	Front right and left working lights	O18/O12	
E20	Poultry blue lights	O13	
H12	Forced forward indicator	K22	
H14	Hydraulics movements cutoff indicator (TUV)	K17	
H16	Warning indicator	S5	
H18	Control indicator	O4	
H19	Bacon control indicator	K4	
H20	Working lights front/rear control indicator	K7	
H21	Rear window defrost control indicator	K12	
H22	Accessory lock indicator	O20	
H31	Security surcharge shunt indicator	K20	
H32	Electric boom prédisposition indicator	O25	
H36	Poultry blue light indicator	G10	
HPD	Right speaker	C18	
HPG	Left speaker	C18	
M9	Heater moto fan	G37	
M10	Air condition condenser Moto fan	Q35	
M11	Air seat Motor	E26	
R6	Rear window defrost	O15	
S12	Forced forward switch option	I23	
S14	Hydraulic cutoff switch	I17	
S16	Warning switch	Q4	
S18	Rear fog lamp switch	M4	
S19	Beacon Switch	I4	
S20	Front/front+ Rear working lights switch	I7	
S21	Rear window defroster	I12	
S22	Accessory Line Lock Switch	O20	
S23	Air condition control switch	C32	
S24	Heater switch control	E36	
S31	Hydraulic movements /surcharge cutoff shunt switch	I20	
S32	Electric boom prédisposition switch	M25	
S33	Accessory lock switch	M20	
S36	Poultry blue lights switch	E10	
S44	Air seat control	C26	

https://truckmanualshub.com/

Components			
Rep.	**Désignation**	**Position sur schéma**	**Correspondance hydraulique**
Y16	Air conditioning compressor clutch	Q30	
Y17	Boom head Electrovalve	S19	

Fusibles et relais		
Rep.	**Désignation**	**Position sur schéma**
BF1/M1		
F44	Cabin fuse box (+BAT) (50A)	I5
BF2/M1		
F5	Cigartte lighter + autoradio (+apc) (10A)	C5
F6	Boom head Electrovalve + forced forward accessory (10A)	C5
F8	Tilt neutral feed + movements Shunt cutoff + Accelerator pedal sensor	C5
F15	Rear window defrost (10A)	C5
F19	Alimentation BUS-BAR C (F27/F28/F29/F30) (30A maxi)	A5
F20	Heater (20A)	A5
BF2/M2		
F22	Right night light + Hydraulic steering illumination button + illumination board (3A)	G4
F27	Accessory line décompression (7,5A)	G4
F29	Air seat (10A)	E5
F30	Front working light + night lights/poultry blue lights (25A)	E5
F35	Autoradio (+perm) (10A)	E5
F39	Alimentation K6 (air condition Compressor) (7,5A)	E5
F40	Alimentation K5 (air condition motoventilator) (20A)	C5
BF2/M3		
K10	Delay relay air condition	I32
BF2/M4		
K7	Start cutoff Relay / digicode (20A/40A)	K26
K8	Flasher	I39
BF2/M5		
K4	Movement cutoff Relay (20A/35A)	K38
K5	Air condition motoventilator relay (20A/35A)	I32
K6	Air condition compressor Relay (20A/35A)	I30

Splices	
Rep.	**Position on schématic**
Ep.39	Q14

https://truckmanualshub.com/

https://truckmanualshub.com/

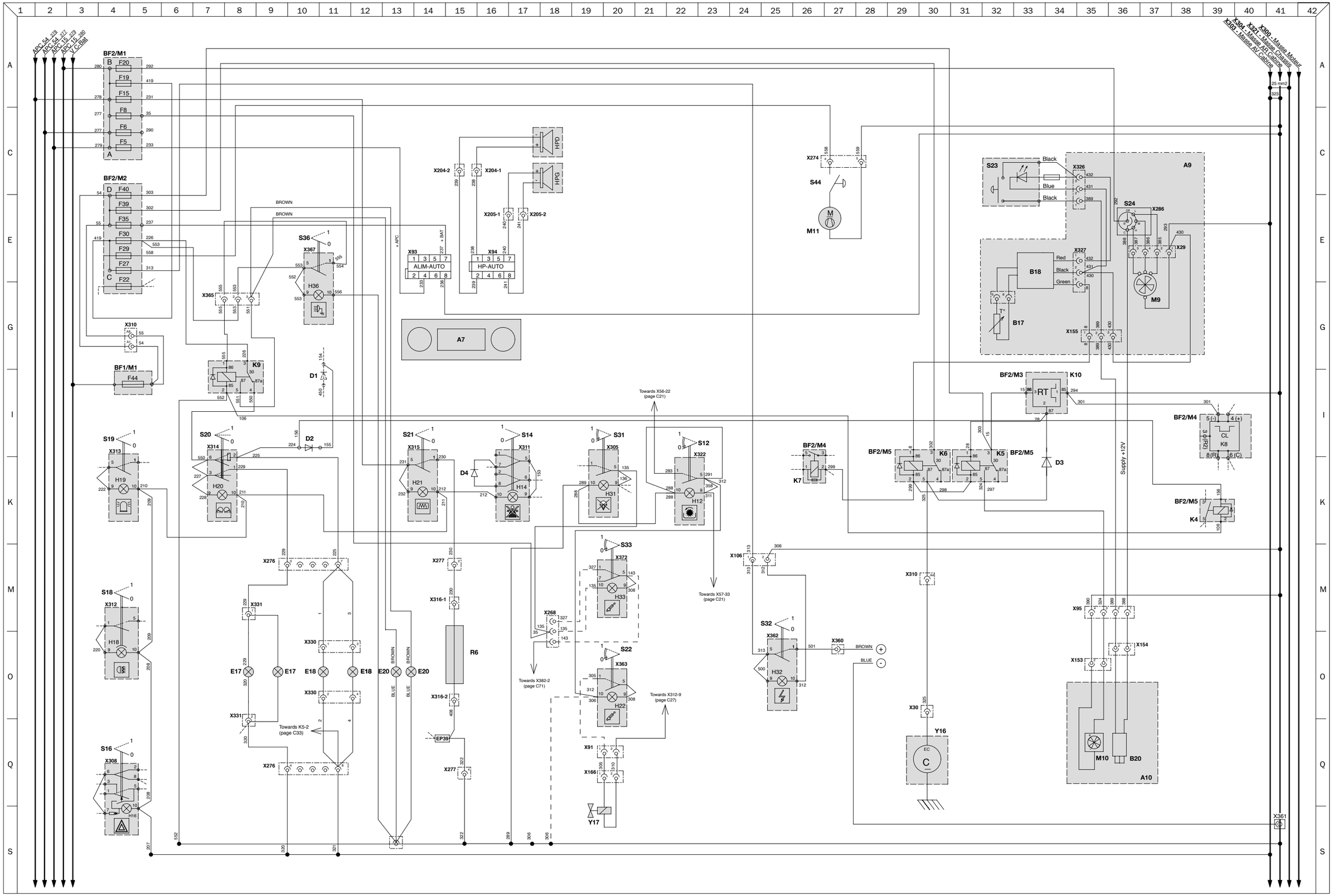

https://truckmanualshub.com/

https://truckmanualshub.com/

MLT 625-75 H

pages

– Légend B3
– Schématic B5

https://truckmanualshub.com/

https://truckmanualshub.com/

HYDRAULIC SCHEMATIC LEGEND (MLT 625-75 H)			
Rep.	**Déscription**	**Position on schématic**	**Caractéristiques (Options)**
BA	BLOCK FEED + ACCUMULATOR (	K15	
BCMA	AGGRAVATING MOVEMENT CUT OFF BLOCK	Q27	
BMHP	PROPORTIONAL HYDRAULIC MANIPULATEUR BLOCK	Q24	
CA	SUCTION STRAINER	S11	
CAR	ANTI-RETURN FLAP	S12	
D	DISTRIBUTOR	M37	
D3	3 POSITION STEERING DISTRIBUTOR	A13	
	- POSITION 1 : TURNING SHORT	A14	
	- POSITION 2 : FRONT WHEEL STEERING	A14	
	- POSITION 3 : CRAB STEERING	A14	
EVTF (O)	HEAD BOOM ÉLECTROVALVE	G41	OPTION
FDAR	REAR FRONT DISC	C18	
FDAV	FRONT BRAKE DISC	C4	
FR	RETURN FILTRE	Q14	
M	THERMIC ENGINE KUBOTA V3307 DI-T (TURBO)	O2	
	- IDLING		895 ±25 Tr/min
	- SYSTEM RATED LOAD		2600 Tr/min
	- HIGH IDLE		2800 Tr/min
MC	MASTER CYLINDER	A8	
MH	HYDROSTATIC MOTOR	A7	
MHRV	HYDRAULIC MOTOR REGULATION VENTILATION	K8	
P	HYDRAULIC PUMP	O4	
PAAV	FRONT ACCESSORY OUTLET	G37	
PAAV (O)	FRONT ACCESSORY OUTLET	E35 E40	
PDD	DYNAMIC STEERING PUMP	I15	
PH	HYDROSTATIC PUMP	O11	
PP	PRESSION OUTLET	E8/K15/O25	
PRF (O)	RETURN RELEASE OUTLET	M40	
R	PRINCIPAL HYDRAULIC TANK	S15	
R1	SECONDARY HYDRAULIC TANK	Q19	
RF	COOLER	K12	
RLF	BRAKE FLUID TANK	A8	
VAI(O)	ISOLATION VALVE		OPTION
VC	COMPENSATION CYLINDER	E30	DE 115x60 C310
VE	BALANCING VALVE	E32 /G30/I28/ I37	
VDAR	REAR STEERING CYLINDER	C16	
VDAV	FRONT STEERING CYLINDER	C6	
VI	TILT CYLINDER	G27	DE 125x65 C 396
VL	LIFT CYLINDER	I26	DE 120x70 C 1100
VT	TÉLESCOPING CYLINDER	I35	DE 70x45 C 2200
VVT (O)	DECK LOCK CYLINDER	E38	DE 60x45 C 183 - OPTION
Y3	FORWARD ÉLECTROVALVE PROPORTIONAL	O7	
Y4	REVERSE ÉLECTROVALVE PROPORTIONAL	O6	
Y6	ÉLECTROVALVE PROPORTIONAL 2P HYDROSTATIC MOTOR SAUER (PCOR)	C8	
Y7	ÉLECTROVALVE BPD (BRAKE PRESSURE DEFEAT)	C9	
Y8	ÉLECTROVALVE TÉLESCOPING SENS + OU -	K19	
Y9	ÉLECTROVALVE ACCESSORY SENS + OU -	K19	

https://truckmanualshub.com/

HYDRAULIC SCHEMATIC LÉGEND (MLT 625-75 H)			
Rep.	**Déscription**	**Position on schématic**	**Caractéristiques (Options)**
Y10	ÉLECTROVALVE STEERING HYDRAULIC PROPORTIONAL (TÉLESCOPING)	K18	
Y11	ÉLECTROVALVE STEERING HYDRAULIC PROPORTIONAL (ACCESSORY)	K18	
Y12	ÉLECTROVALVE HYDRAULIC CUTOFF (TUV)	K17	
Y13	ÉLECTROVALVE NEGATIVE BRAKE	M19	
Y14	ÉLECTROVALVE PROPORTIONAL CUTOFF DESCENT	Q28	
Y15	ÉLECTROVALVE TILT CUTOFF	S28	
Y17	ÉLECTROVALVE BOOM HEAD	G39	OPTION
Y18	ÉLECTROVALVE PROPORTIONAL RAISE CUTOFF	Q28	
1	r = 1.16 x RPM	O3	
2	télescope retract-4b	K20	
3	télescope release-4a	K20	
4	locking accessory-3b	K20	
5	locking accessory-3a	K20	
6	lift-1b	Q30	
7	descent-1a	Q31	
8	breakout-2a	S32	
9	discharge-2b	S30	
10	dynamic priority flow valve	O27	
11	lift	O30	
12	tilt	O32	
13	accessory	O34	
14	télescoping	O36	
15	(90l/min) descent	K30	
16	(90l/min) lift	K16	
17	(90l/min) breakout	K32	
18	(90l/min) discharge	K32	
19	(90l/min) unlocking accesory	K34	
20	(90l/min) locking accessory	K34	
21	(90l/min) télescope release	K35	
22	(90l/min) retracted télescope	K36	
23	security valve *	O28	
* (cuts all the aggravating movements when the machine have reached its limits of stability)			

https://truckmanualshub.com/

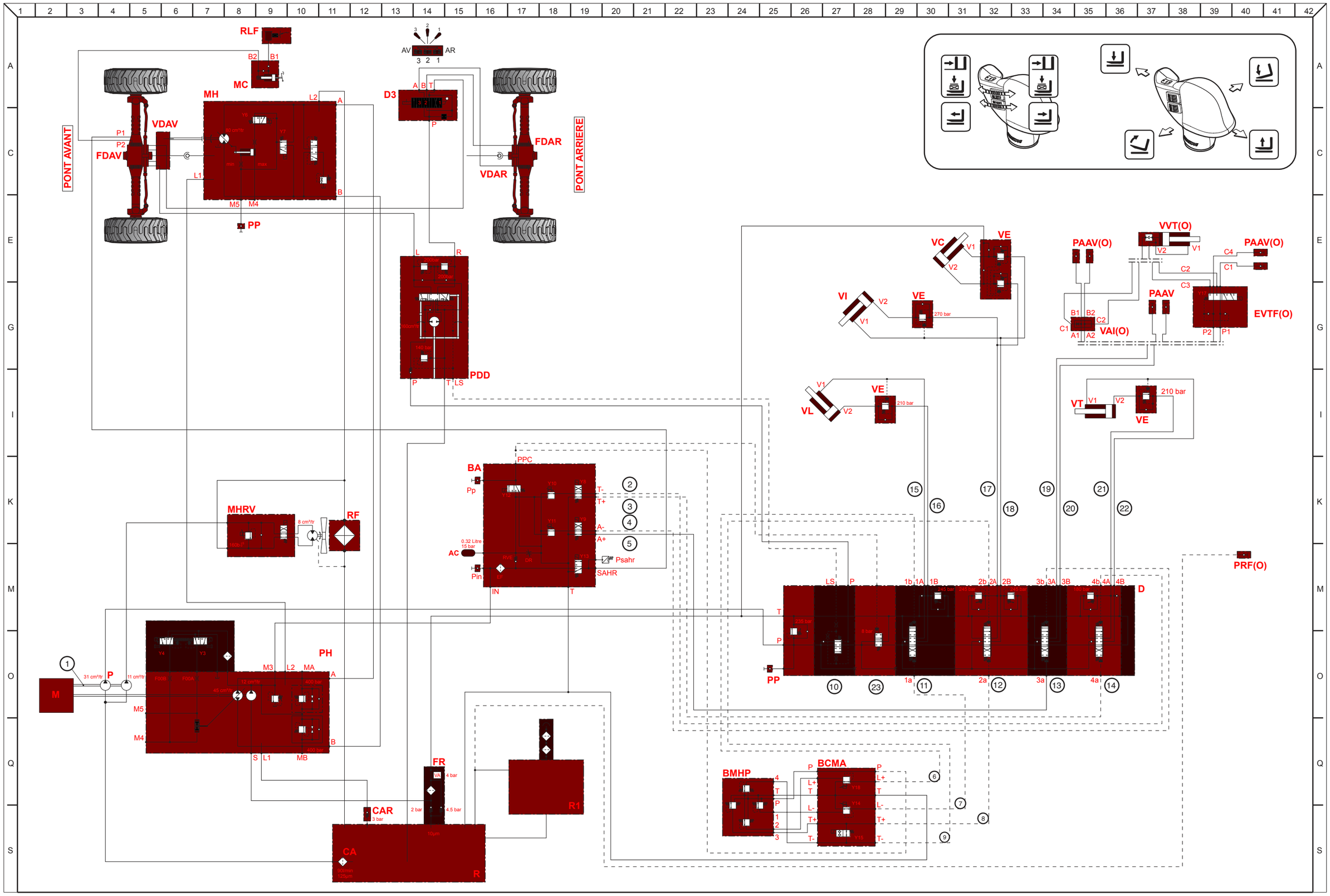

https://trucknanualshub.com/