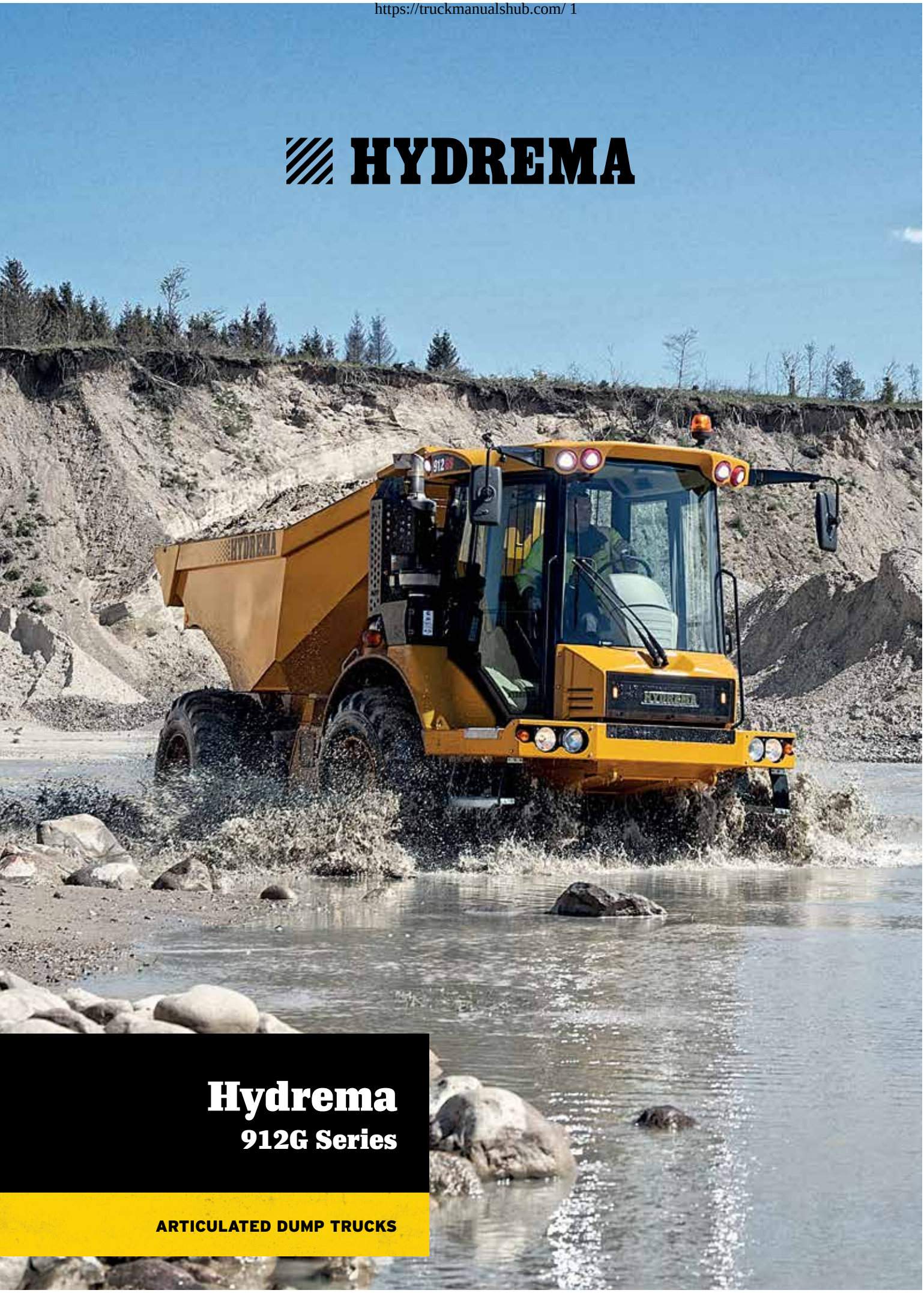

Hydrema

912G Series

ARTICULATED DUMP TRUCKS

Innovative earthmoving since 1959

Since 1959 Hydrema has developed, manufactured, sold and serviced high-tech construction machines. Efficient, innovative and high-quality machines. Our products distinguish themselves from other products on the market through their technical and physical capabilities. Very well suited to perform specialized tasks in construction and installation work.

HYDREMA

https://truckmanualshub.com/ 3

HYDREMA 912G SERIES:

Compact, highly mobile and off-road superior.

Articulated, compact dump trucks. High power, low weight, durable and easy to operate. Providing efficiency and flexibility - every day, year after year.

In 1983 Hydrema launched our first compact dump truck. Today these small, agile and robust dump trucks work all over the globe. The 912G Series is the 9th generation.

Stable

The main reason for the success of the Hydrema 912 dump truck is found in the articulated and oscillating pivot point.

The center pivot with hydraulic stabilisers keep the machine stable and safe by automatically transferring the weight to where it is needed. Furthermore the 912GS/912HM has a patented front axle suspension with auto levelling, which always gives a safe and comfortable drive.

The chassis design ensures that the front and rear wheels are running in the same track, while the standard twin tyres give outstanding traction with minimum ground damage. The centrally placed articulation point increases the maneuverability with a small turning radius of just 6.1 m and great positioning characteristics.

Easy to operate

Operating the 912G is easy and the driver becomes familiar with the machine functions and maneuverability in no time.

User-friendly controls, joystick operation, unrivalled visibility and a well-designed cabin ensures the best working conditions.

A well proven 6 speed ZF Soft-Shift transmission offers full auto or manual shift. This intelligent transmission will automatically shift 2 gears in the right conditions to smoothly increase acceleration regardless of the payload.

Strong and efficient

Whether the 912 is working on steep gradients or in poor ground conditions, it has the power to cope; state of the art 147 hp Cummins engine offers one of the best power-to-weight ratios on the market.

The high torque offers power at low revs. Together with an electrically controlled cooling fan which only operates when needed, the fuel economy and noise levels are improved. Great for both environmental and financial reasons.

Furthermore the engine has an upgraded, fully welded cooler, resulting in 10% increased cooling capacity.

https://truckmanualshub.com/ 4

Working in poor ground conditions and where space is limited

The compact design along with smart features like the swiveling dump body - MultiTip - allow the truck to work where space is limited.

The unique combination of high stability, outstanding traction and lots of power provides the dump truck with great driving abilities even in rough, hilly and muddy conditions.

The low weight provides a very low ground pressure - down to 85 kPa - when carrying a full 10 ton load. Together with tracking of the wheels this ensures minimal ground damage and makes it perfect on sensitive surfaces like golf courses, landscaping and for environmental work.

Rental friendly

The 912 dump trucks are engineered and built to last for many years. Low maintenance costs, ease of use and utilization in a wide range of applications make it particularly suitable for rental.

Visible safety

Extensive LED lights offerings are available as options.

Orange flashing LED lights - front and rear - increase the visibility of the dump truck.

Up to 12 powerful LED work lights and the new LED headlights make night into day during the dark hours.

ADVANTAGES

- High mobility due to center pivot steering and hydraulic stabilizers.
- High quality. Heavy duty construction. Built to last.
- Low weight of the truck provides a very low ground pressure.
- Strong Cummins B4.5 stage 5 engine with DOC, DPF and SCR catalyst. Great torque.
- User friendly. Safe and comfortable. Perfect for rental.

https://truckmanualshub.com/ 5

EASY UNLOADING:

Unloading that works for you.

The body is the backbone of the dump truck. The unloading process is optimized through the body-design and by utilizing smart features like automatic tipping throttle and MultiTip.

Strong and robust body

The body is manufactured in durable high tensile steel and a rigid frame along the top provides high strength.

Two strong double-acting tipping cylinders, underneath the body, ensure that the body is lowered into place regardless of the inclination of the machine.

The ground clearance when tipping is 110 cm. This provides opportunity to unload material over edges, or in high piles in order to save space.

Efficient unloading

With a tipping time of only 6 seconds the 912 unloads quickly. The dump truck is fitted with an automatic tipping throttle, which means that the machine increases the engine revs., when the tipping function is activated to quickly raise the body.

In addition, the body can be raised to an angle of 75 degrees and is designed with rounded corners, so even wet and sticky material will easily slide off when tipping.

In cases where additional stability is required - for example, unloading over the side – the pivot lock can be activated.

Precise and flexible unloading

A popular optional feature is the MultiTip. The dump truck can turn the body 90° to each side and deliver the payload anywhere you want in that 180° area with high precision.

MultiTip makes several working situations easier. For example when tipping a certain amount of payload sideways, whilst moving forward, or into a trench. MultiTip also allows you to work in areas with limited space.

Just push the button

With the optional Auto-Body-Return function, the body is automatically lowered back onto the chassis with a push of a button. It allows the operator to instantly drive on to the next task, fully concentrated on what happens in front of the dump truck. It saves valuable time.

Stable even on inclines

The low center of gravity and good weight distribution between the chassis parts provide great stability, no matter if the dump truck is carrying load or not.

Via the new hoist-assistance option, the operator gains information about the machine's gradient both sideways and longitudinal in the dashboard.

Should the inclination become too severe, a warning will appear letting the operator know it is unsafe to tip.

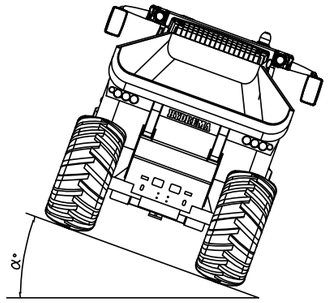

Driving on inclines
(Slope angle where the machine overturns).

	912G		912GS		912HM	
	EMPTY	LOADED	EMPTY	LOADED	EMPTY	LOADED
Going straight	40°	32°	39°	38°	39°	38°
Turning up-hill	39°	29°	31°	28°	31°	28°

https://truckmanualshub.com/ 6

https://truckmanualshub.com/ 7

COMFORTABLE WORK SPACE:

One-step access, excellent visibility and easy operation.

One step into comfort

The spacious cab offers great visibility and a soft touch, "easy to clean" interior. All instrumentation is ergonomically placed. The steering wheel, seat and armrests are all multi-adjustable. To further increase comfort, an air-suspended seat with ventilation and automatic weight adjustment can be fitted.

The joystick is an integrated part of the right armrest. Here you operate the main functions e.g tipping, gear selection, and differential lock.

The air-conditioning system has 8 air nozzles for optimal indoor climate. Automatic entry/exit lighting increases safety during dark hours. To reduce vibration, the cab mountings are spring dampened.

A great view

The engine is placed behind the forward facing cab, which gives the operator a safe, unobstructed view from the seat. In combination with the optional rear view camera, the operator has superb all round visibility, which meets the ISO standards 5006 & 14401.

Automatic battery isolator

An automatic battery isolator shuts off all electric systems when you turn off the ignition key and leave the dump truck. When you return, door sensors turn the electric system back on.

You can manage the time of the shut-down via the dashboard. An emergency battery isolator is located inside the cab.

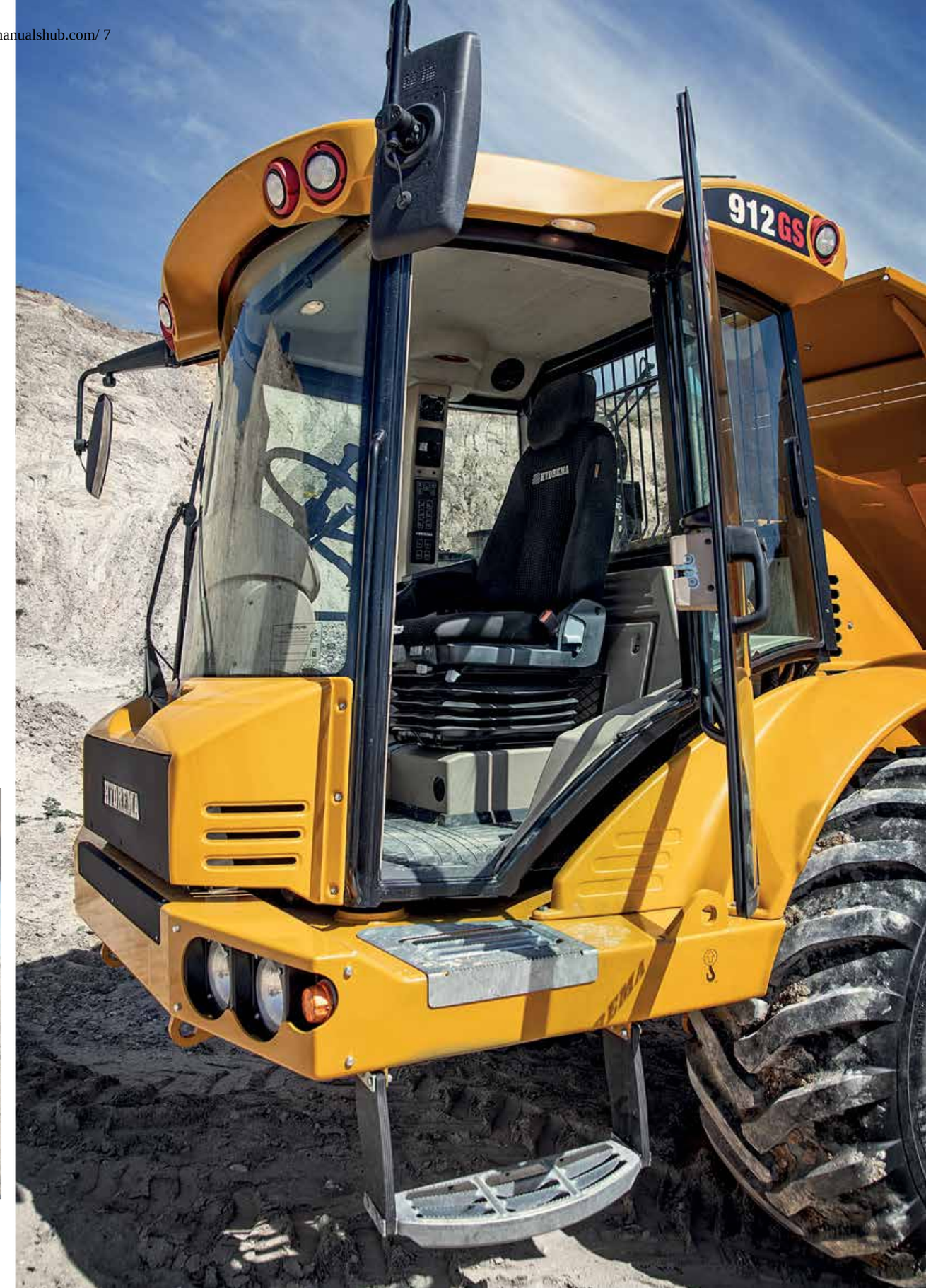

https://truckmanualshub.com/ 8

CONFIGURATIONS:

Multiple choice.

The 912G-Series dump truck range offers many different options to suit your needs and requirements.

The 912G is the standard dump truck.

The 912GS and 912HM have a suspended front axle. An electro-hydraulic suspension system provides unprecedented comfort for this size of dump truck. The system has independent suspension cylinders with electronic level control that aligns the machine in an optimal position. This substantially reduces vibrations, especially on longer hauls and minimizes operator fatigue. The built-in computer automatically adjusts the suspension, depending on how much it is carrying.

The 912HM model also features taller tyres, higher ground clearance and can accommodate up to 800mm wide tyres to minimize ground pressure.

The 912's are as standard mounted with a rear tip body, but can be fitted with the optional MultiTip, which allows the body to turn in a 180° area.

The 912HM Flatbed is also available. The rear chassis is extended to accommodate the increased length of the body.

The MultiChassis version is a universal platform to mount a variety of customized solutions, such as water tanks, concrete mixers or salt spreaders.

Furthermore, items like brushes and snow blades can be mounted both front and rear.

Customized machine colors are available.

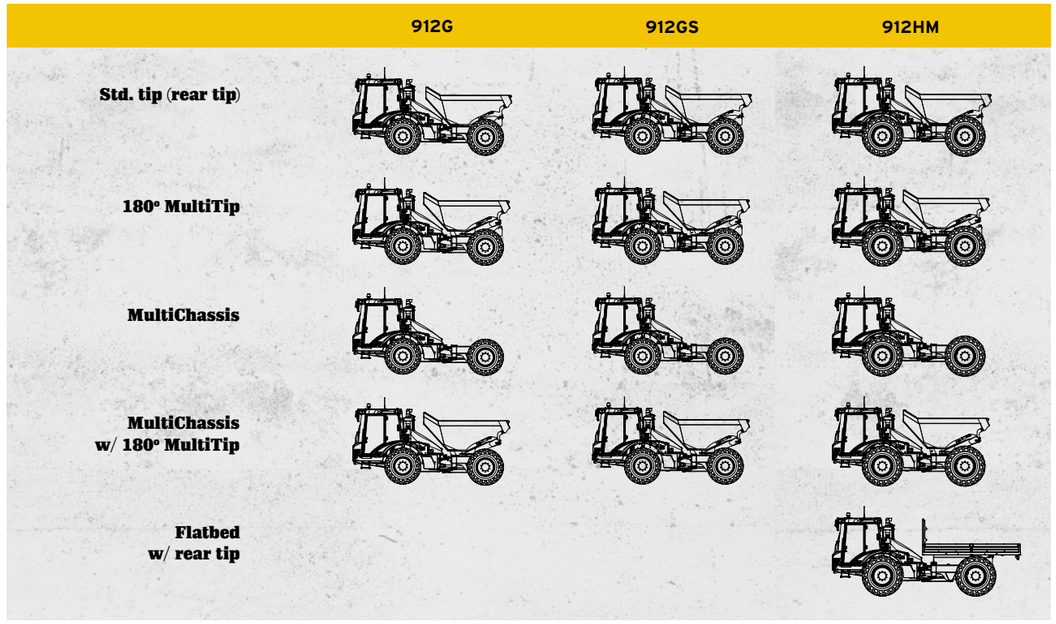

ps://truckmanualshub.com/ 10

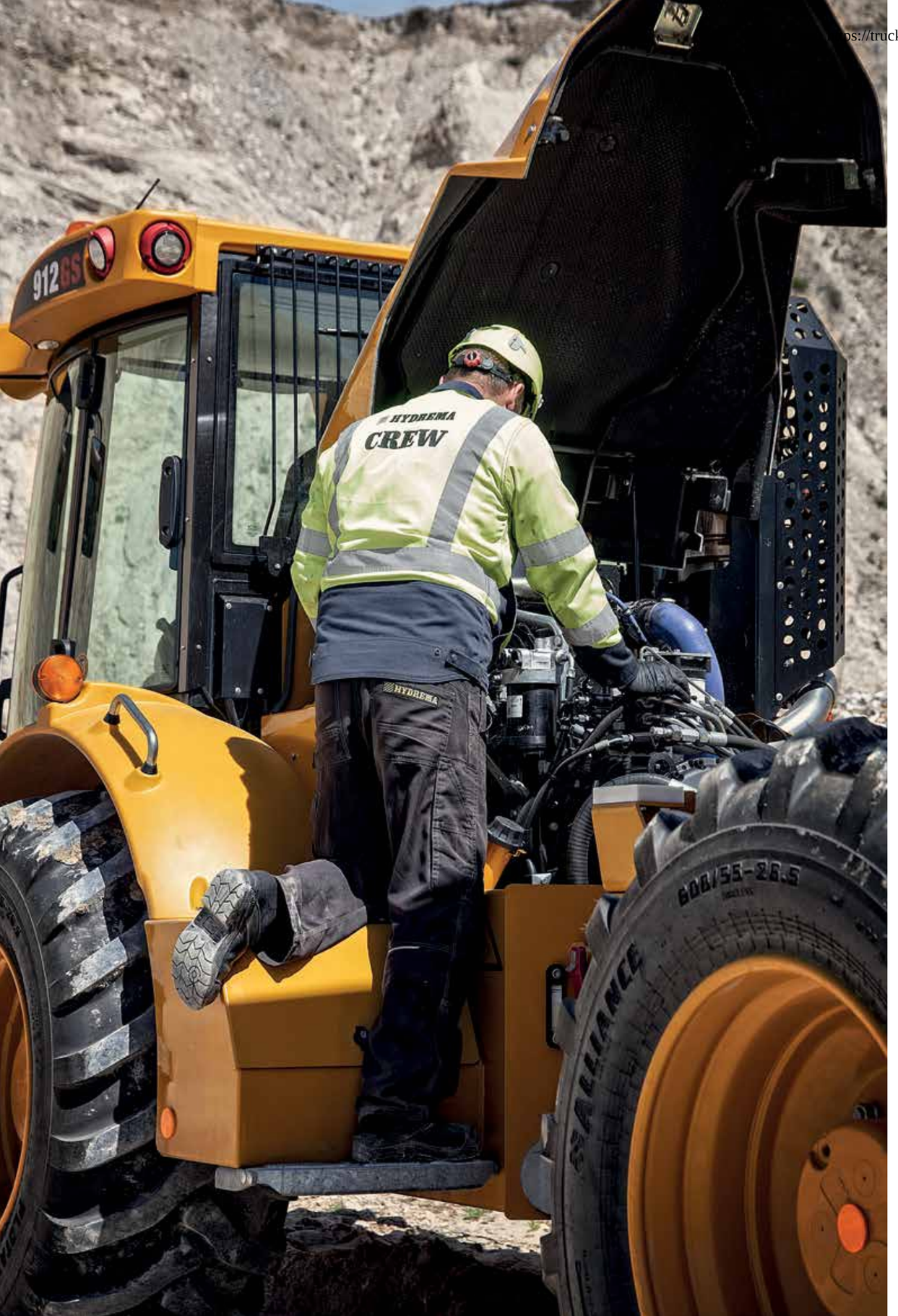

SERVICE & MAINTENANCE:

Service access made easy.

Maximize the uptime with ground level access, quick servicing and online monitoring through Hydrema Telematics.

Easy service access

Opening the large engine bonnet provides easy, ground-level access to the different service points. The new engine bay layout means it is easier than ever to control oil levels and the different filters, while wider steps let you safely reach all parts of the engine with ease.

Easy and fast access to the cooling pack through the service door behind the seat.

Automatic battery isolator

An automatic battery isolator shuts off all electric systems when you turn off the ignition key and leave the dump truck. When you return, door sensors turn the electric system back on.

You can manage the time of the shut-down via the dashboard. An emergency battery isolator is located inside the cab.

Easy maintenance

Drain valves make it easier and more controllable to drain oil, as you now have full control over the process.

With the optional, automatic central greasing kit, the machine takes care of its own lubrication requirement.

Hydrema Telematics

The 912G can be equipped with the new Hydrema Telematics tracking system. It is a data collection tool which collects information from the machine via sensors and electronics.

Users can individually log on to the online portal and gain access to downloaded data from the engine, transmission and other key components along with real-time reports of working hours and the location of the machine.

By analysing the collected data, the owner/operator can optimize both operational and financial control of the machine.

This system can also help the Hydrema Service team diagnose problems fast and precise - via display alarm codes, and other vital data from the machine via the online portal.

TECHNICAL DATA:

Designed and built to last.

Chassis

Articulated chassis in a heavy-duty robot-welded construction. 912G has rigid integral axles, whilst the 912GS and 912HM have front axle suspension in heavy-duty pivot bearings and two suspension cylinders. Pivot with pendulum bar and double hydraulic stabilizers with the option of locking the oscillation movement. The pivot is fitted with large spherical pivot bearings. The fuel, AdBlue and hydraulic tanks are integrated into the front chassis.
Oscillation: +/- 12º

Axles

The 912G has fixed, rigid axles. The 912GS and 912HM have electronically suspension with two independent suspension cylinders on the front axle. The axles have planetary reduction in the wheel hubs and separate oil reservoirs in the hubs. The front axle has automatic limited-slip differential lock whilst the rear axle has an electro-hydraulically activated 100% differential lock.

Engine

Cummins B4.5 Stage 5 engine with DOC, DPF and SCR catalysts with Ad-Blue additive. 4.5 litre, 16 valve common rail turbo diesel engine with intercooler and electronically variable turbo charger. Max power: 108 kW (147 hp) at 2000 rpm. Max. torque: 600 Nm at 1500 rpm.

Transmission

ZF WG115 6-speed fully automatic »ERGOPOWER« with full electronic control. 6 forward and 3 reverse gears. Electronically controlled pressure on each clutch ensures completely smooth gear shifts without any loss of tractive effort. Automatic or manual gear shifts; it is possible to shift manually using push buttons on the joystick. Constant 4WD.

Steering

Hydrostatic Load Sensing pivot steering with 2 double acting cylinders. Priority valve and integrated emergency steering. Steering cylinders with damping.
Max. steering angle: +/- 35º

Hydraulic System

Hydraulic pump with 84 l/min for tipping function and with priority valve for steering function. Separate hydraulic pump for brakes and pivot stabilizers.

Brakes

Dual-circuit hydraulic servo system with oil-immersed brake discs on each wheel. The brakes are self-adjusted and maintenance-free. The parking brake is a Maintenance-free, Fail-safe brake with electro-hydraulic activation of the wet disc brakes on the front axle.

Cab

Spacious ROPS / FOPS approved cab with cab suspension. Mechanical or air-suspended seat. Adjustable steering wheel and multi-joystick control.

Body

5.6 m³ body fabricated in robotically welded high tensile steel.

Electric System

Standard 24V system with 70 Amp. alternator. Batteries: 2x 12V, 95Ah.

Noise Levels

LpA: 72 dB(A) (inside cab)
LwA: 102 dB(A) (outside cab)

Fuel

Diesel: 140 L fuel tank.
Ad Blue: 14 L tank.
Integrated into the front chassis.

MultiTip (optional)

Compact slewing system with rapid unloading at the rear and to both sides. The slewing system is supported in a robust ball-bearing slewing ring. Pivotal movement takes place by means of 2 double acting cylinders. Tipping function by means of 2 double acting cylinders.

Dimensions.

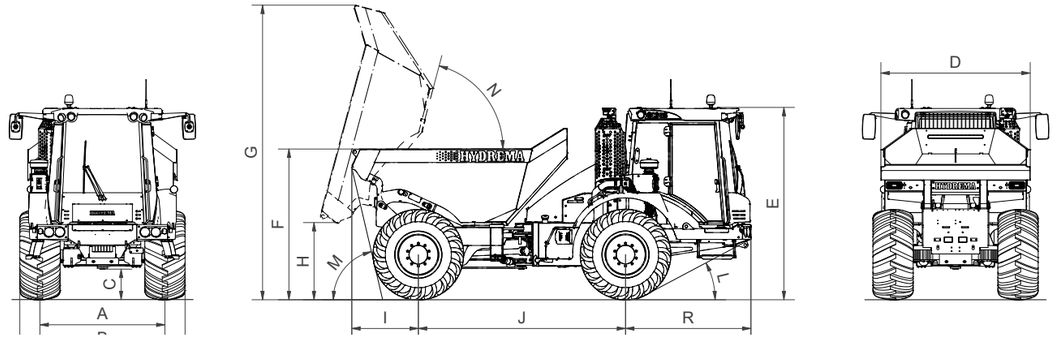

			912G			912GS			912HM				
			STD. TIP	MULTITIP	MULTICHAS.	STD. TIP	MULTITIP	MULTICHAS.	STD. TIP	STD. TIP	MULTITIP	MULTICHAS.	FLATBED
	Tires		600/55-26,5	600/55-26,5	600/55-26,5	600/55-26,5	600/55-26,5	600/55-26,5	800/45x30.5	600/60x30.5	800/45x30.5	800/45x30.5	800/45x30.5
	Total weight	kg	17270	17730	18000	17540	18000	18000	18260	17970	18720	18000	18260
	Unladen weight	kg	7270	7730	6100	7540	8000	6200	8260	7970	8720	6900	8260
	Load capacity	kg	10000	10000	11900	10000	10000	11700	10000	10000	10000	11100	10000
	Body capacity	m³	5.6	5.6	-	5.6	5.6	-	5.6	5.6	5.6	-	5,6
	Turning radius	m	6.1	6.1	6,1	6.1	6.1	6,1	6.3	6.1	6.3	6,3	7,0
	Ground pressure (loaded)	kPa	122	123	-	123	125	-	85	113	86	-	85
	Suspended front axle					X	X	X	X	X	X	X	X
A.	Track	mm	1860	1860	1860	1860	1860	1860	2060	1900	2060	2060	2060
B.	Total width	mm	2470	2470	2470	2470	2470	2470	2870	2540	2870	2870	2870
C.	Clearance	mm	450	450	450	450	450	450	520	520	520	520	520
D.	Dump truck body width	mm	2210	2210	-	2210	2210	-	2210	2210	2210	-	2485
E.	Total height	mm	2750	2750	2750	2790	2790	2750	2865	2865	2865	2868	2865
F.	Loading height	mm	2225	2390	-	2245	2410	-	2330	2330	2480	-	1950
G.	Height with raised body	mm	4385	4550	-	4385	4550	-	4470	4470	4635	-	4330
H.	Tipping clearance	mm	1110	1280	-	1110	1280	-	1195	1195	1365	-	400
I.	Overhang, rear	mm	990	910	-	990	910	-	990	990	910	-	1675
J.	Wheel base	mm	3080	3080	3080	3080	3080	3080	3080	3080	3080	3080	3480
K.	Length	mm	5940	5860	5650	5940	5860	5650	5940	5940	5860	5730	7025
L.	Approach angle, front	º	27	27	27	28	28	28	30	30	30	30	30
M.	Approach angle, rear	º	75	80	-	75	80	-	80	80	83	-	45
N.	Tipping angle	º	75	75	-	75	75	-	75	75	75	-	72
R.	Overhang, front	mm	1870	1870	-	1870	1870	-	1870	1870	1870	-	1870

HYDREMA
HYDREMA
912

Subject to change. Photos may be shown with optional equipment - 085xxx - 10/2020

HYDREMA (UK) LTD.
Phone 01765 641940

MORE INFO
www.hydrema.co.uk

HYDREMA