https://truckmanualshub.com/

STC200

STC200 TRUCK CRANE
20 TONS LIFTING CAPACITY

Quality Changes the World

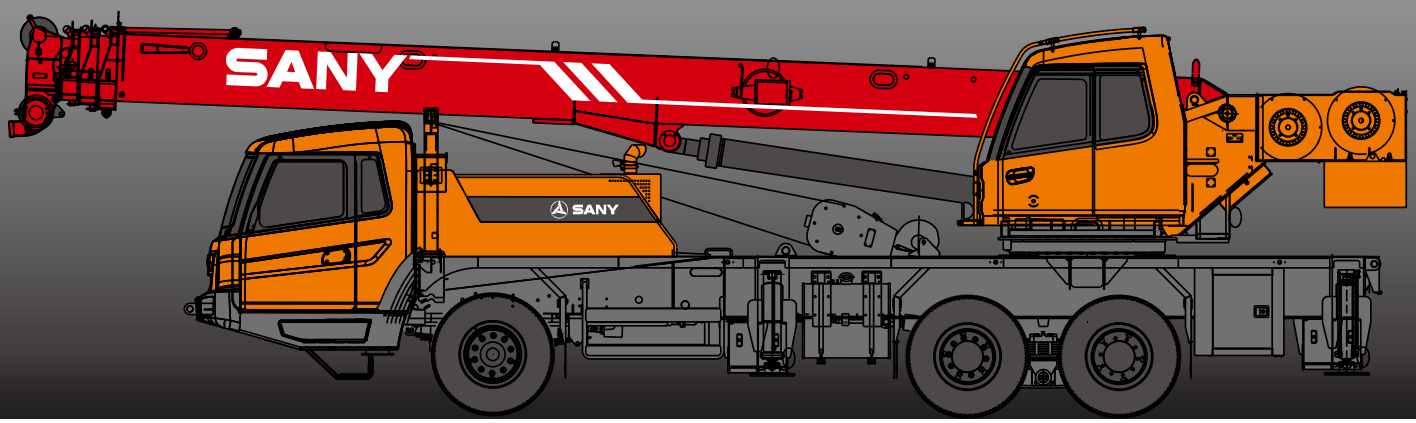

SANY

https://truckmanualshub.com/

SANY Automobile Hoisting Machinery is one of the core business unit of Sany Heavy Industry, mainly engaged in the research and development of high end, mid to large tonnage crane series, including mobile crane, crawler crane, tower crane and loader crane. It has two industrial parks in Ningxiang and Huzhou, since entering the market, the products of Sany Automobile Hoisting Machinery have received worldwide recognition with advanced technology, lean manufacturing, high reliability and excellent service.

https://truckmanualshub.com/

SANY TRUCK CRANE

CONTENT

04 Icon
05 Selling Points
06 Introduction
09 Dimension
10 Technical Parameter
11 Operation Condition
12 Load Chart
14 Wheel Crane Family Map

- Cab
- Hydraulic system
- Control system
- Telescopic system
- Luffing system
- Slewing
- Counterweight
- Safety system
- Hoist system
- Carrier frame
- Outriggers
- Engine
- Transmission system
- Drive/Steer
- Axles
- Tyres
- Brakes system
- Electrical system
- Suspension system
- Telescopic boom
- Lattice jibs
- Superlift devices
- Luffing lattice jib
- winch mechanism:

Excellent and stable chassis performance / chassis system

Double-axle drive is used, providing good trafficability and comfortableness under complex road condition with reliable traveling performance.
Engine has the multimode power output function, which reduces power consumption.

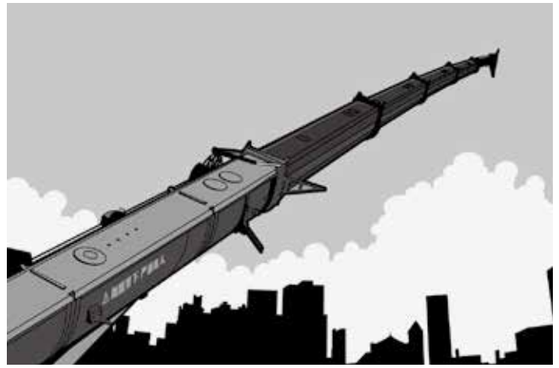

Ultra long and super strong boom system

Four-section boom of high strength steel structure and optimized sexangle cross section reduces weight significantly with higher safety rates. Jib mounting angles are 0°, 15° and 30°, which ensures fast and convenient change-over between different operating conditions so as to improving working efficiency of the machine.

Highly efficient, stable, energy-saving and adjustable hydraulic system

Triple gear pump, load feedback and constant power control are applied to provide strong lifting capacity and good micro-mobility. Unique steering buffer design is applied to ensure stable braking operation.

Safe, stable, advanced, and intelligent electric control system

Self-developed controller SYMC specially for engineering machinery is configured. The adoption of CAN-bus full-digital network control technology ensures stable control signal, simple harness and high reliability. Timely feedback of data information can achieve the monitoring of the overall working status in real-time. The load moment limiter equipped with the comprehensive intelligent protection system is used with accuracy within 3% to provide a comprehensive logic and interlock control, thus ensuring more safe and reliable operation.

https://truckmanualshub.com/

Superstructure

Cab

- It is made of safety glass and anti-corrosion steel plate with ergonomic design such as full-coverage soften interior, panoramic sunroof and adjustable seats etc., and humanized design providing more comfortable and relaxing operation experience. The display of load moment limiter integrates main console and operation display system, which clearly show the data of all operating superstructure conditions for lifting operation.

Hydraulic system

- High-quality key hydraulic components such as main oil pump, rotary pump, main valve, winch motor and balancing parts etc. are adopted to achieve stable and reliable operation of the hydraulic system. Superior operation performance is guaranteed by accurate parameter matching.
- Main valve has flow compensation and load feedback control function, enabling stable and convenient control of single action and combined action under different operation conditions.
- Winch adopts the variable motor to ensure high operation efficiency. Max. single line speeds of main and auxiliary winches is up to 110r/min which ensures the lifting efficiency take the lead in industry.
- The use of new slewing system ensures more stable starting and control of the slewing operation and excellent micro-mobility.

Control system

- CAN-bus instrument: CAN-bus instrument with a combined intelligent control electrical system is used for easy reading of the traveling parameters at any time. The engine fault warning function is applied to ensure convenient and fast troubleshooting.
- Load moment limiter: The adoption of high intelligent load moment limiter system can comprehensively protect lifting operation, ensuring accurate, stable and comfort operation.

Luffing system

- Dynamic luffing system with controllable speed provides more stable luffing operation at low energy loss.
- Luffing angle: -2°~ 80°.

Telescopic system

- Four-section boom is applied with basic boom length of 10.6m, fully extended boom length of 33m, jib length of 8 m and fully extended boom lifting height of 33m respectively. Max. lifting height is 41.5m including jib. It is made of fine grain high-strength steel with hexagon cross section and with telescopic operation controlled independently by dual-cylinder rope.

Superstructure

Slewing system

- 360° rotation can be achieved with Max. slewing speed of 2r/min, providing stable and reliable operation of the system.

Hoisting system

- The winch adopts the high-quality quantitive plunger pump, enabling ensuring highly efficient operation and stable lifting and lowering of the load.
- One main hook: 250Kg; one auxiliary hook: 90Kg; wire rope of main winch: left-handed wire rope 14-35W×7-1960, with length of 163m. Wire rope of auxiliary winch: left-handed wire rope 14-35W×7-1960, with length of 95m.

Safety system

- Load moment limiter: Load moment limiter calculation system based on lifting load mechanical model is established using an analytical mechanics method, with rated lifting accuracy up to ±3% through on-line non-load calibration, providing full protection to lifting operation. In case of overload operation, system will automatically issue an alarm to provide safety protection for manipulation.
- Hydraulic system is configured with the balance valve, overflow valve and two-way hydraulic lock etc. components, thus achieving the stable and reliable operation of the hydraulic system.
- Main and auxiliary winches are equipped with over roll-out limiter to prevent over rolling-out of wire rope.
- Main winch end is equipped with height limiters respectively to prevent over-hoisting of wire rope.
- Equipped with length sensor, angle sensor and press sensor to indicate the working condition of whole crane in real-time, giving an alarm and cutting off the dangerous action automatically.

Counterweight

- Counterweight is 2500kg, no flexible counterweight.

https://truckmanualshub.com/

Chassis

Cab

- Cab is made of new steel structure self-developed by SANY, featuring excellent shock absorption and tightness, which is configured with swing-out doors at both sides, pneumatically suspended driver's seat and passenger's seat, adjustable steering wheel, large rearview mirror, comfortable driver's chair with a headrest, anti-fog fan, air conditioner, stereo radio and complete control instruments and meters, providing more comfortable, safe and humanized operation experience.

Carrier frame

- Designed and manufactured by SANY, anti-torsion box structure is welded by fine-grain high-strength steel plate to provide strong load bearing capacity.

Axles

- Axles 2 and 3 are drive axles and axles 1 is steering axles, axle and wheel differentials are installed in axles 2 and 3. The use of welding process for axle housing provides stronger load bearing capacity.

Engine

- Type: Inline six-cylinder, water cooled, supercharged and inter-cooling diesel engine
- Rated power: 213kw / 2100rpm.
- Environment-protection: Emission complies with EuroIII standard
- Capacity of fuel tank: 300L.

Transmission system

- Gearbox: Manual gearbox is adopted with 8-gear and large speed ratio range applied, which meets the requirements of low gradeability speed and high traveling speed.
- Transmission shaft: With optimized arrangement of the transmission shaft, the transmission is stable and reliable.
- For most optimized transmission, plate flange is used with large transmission torque.

Brakes system

- Air serve brakes are used for all wheels with dual-circuit brake system applied. Engine is equipped with an exhaust brake.

Suspension system

- All axles adopt the plate spring suspension systems with plate spring passed 100,000 fatigue tests and with optimization of performance parameters of the front and rear plate springs applied to ensure strength and also to provide comfort ridding.

Steering system

- Hydraulic power mechanical steering systems are applied for axles1with unloading valve installed in the steering gear.

Outriggers

- Four-point supporting of the H-shaped outriggers ensures easy operation and strong stability with Max. span up to 5.1m×6m. They are made of fine-grain high-strength steel sheet. Full hydraulic transverse telescopic outriggers are adopted for first outrigger and with horizontal adjustment applied for outriggers through a vertical cylinder.

Tyres

- 11*11.00-20
- 11 (number of tyres) - type: 11.00-20 ; bias tires are used, featuring with large bearing capacity and durable use.

Electrical system

- With 2*12V maintenance-free batteries, the crane power can be cut off manually via a mechanical master power switch.

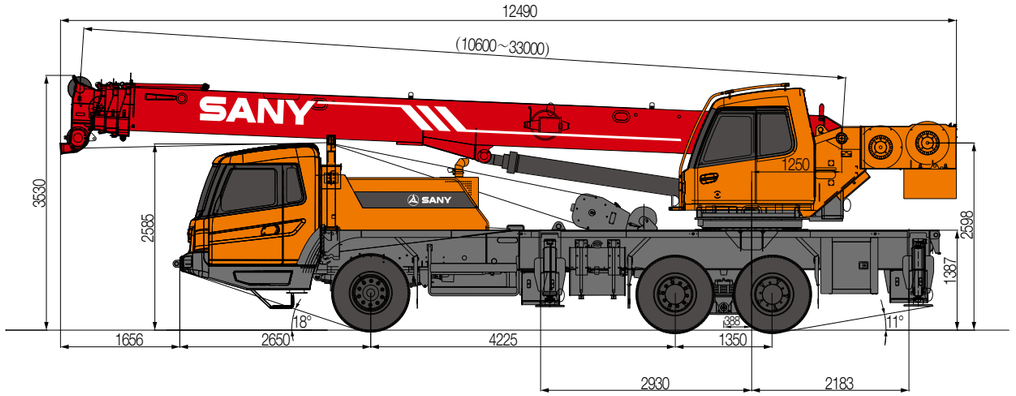

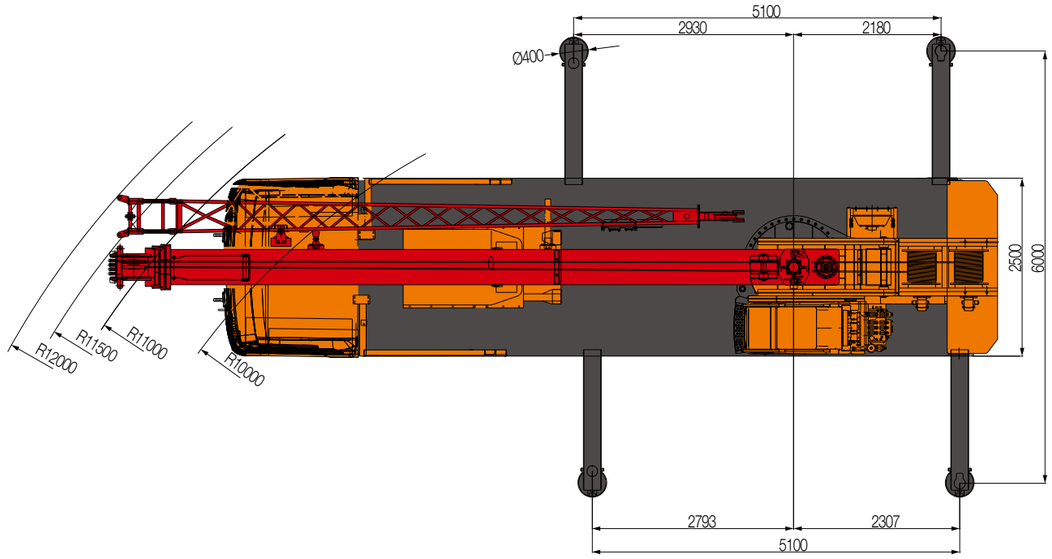

https://truckmanualshub.com/

Type	Item		Parameter
Capacity	Max. lifting capacity		20 t
Dimensions	Overall length		12490mm
	Overall width		2500mm
	Overall height		3530mm
	Axle distance	Axle-1,2	4225mm
		Axle-2,3	1350mm
Weight	Overall weight		26400kg
	Axle load	Axle load-1	6850kg
		Axle load-2,3	19550kg
	Rated power		213kw/2100r/min
	Rated torque		1050N·m/(1200r/min~1400r/min)
Traveling	Max.traveling speed		80km/h
	Turning radius	Min.turning radius	10m
		Min.turning radius of boom head	12m
	Wheel formula		6 × 4
	Min.ground clearance		220mm
	Approach angle		18 °
	Departure angle		11 °
	Max.gradeability		35%
	Fuel consumption per 100km		≤ 35L
Main Performance Data	Temperature range		– 30 °C~ + 60 °C
	Min.rated range		3m
	Tail slewing radius of swingtable		3m
	Boom section		4
	Boom shape		Hexagonal
	Max.lifting moment	Base boom	860kN·m
		Full-extend boom	470kN·m
		Full-extend boom+jib	246kN·m
	Boom length	Base boom	10.6m
		Full-extend boom	33m
		Full-extend boom+jib	41.5m
	Outrigger span (Longitudinal×Transversal)		5.1m × 6m
	Jib offset		0 °, 15 °, 30 °
Working speed	Max.single rope lifting speed of main winch (no load)		≧110m/min
	Max.single rope lifting speed of auxiliary winch (no load)		≧110m/min
	Full extension/retraction time of boom		60 / 40s
	Full lifting/descending time of boom		60 / 50s
	Slewing speed		(0~2) r/min
Aircondition	Aircondition in up cab		Cooling and Heating
	Aircondition in low cab		Cooling and Heating

STC200 Working Ranges

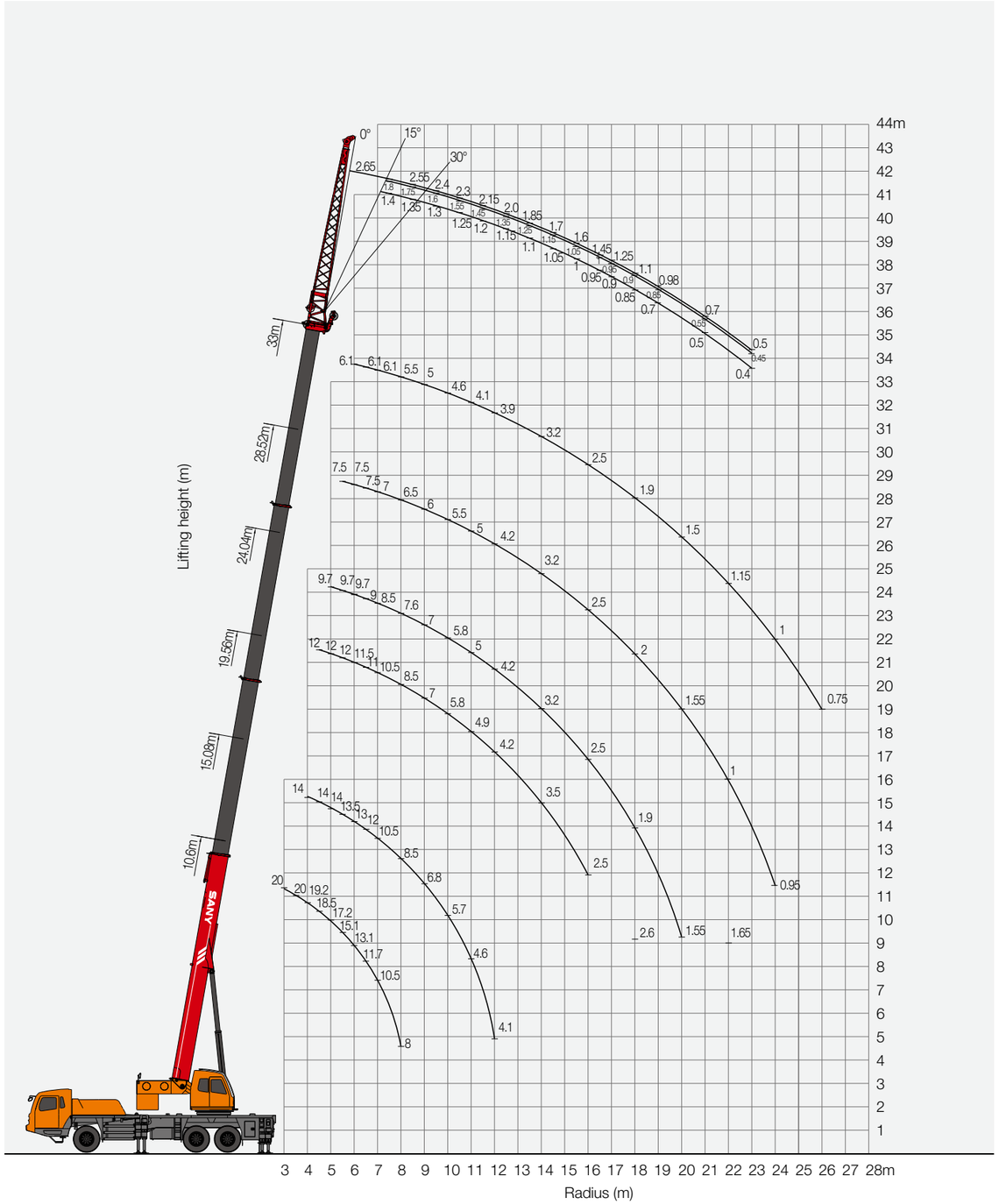

https://truckmanualshub.com/

Unit:Kg

Prerequisites:
① Boom operating condition (fully extended boom length), min. length is 10.6m and max. length is 33m
② The span of outrigger is 5.1m×6m
③ 360°rotation is applied
④ Counterweight is 2.5T

Working range(m)	Main boom						Working range(m)
	10.6m	15.08m	19.56m	24.04m	28.52m	33m	
3	20000						3
3.5	20000						3.5
4	19200	14000					4
4.5	18500	14000	12000				4.5
5	17200	14000	12000	9700			5
5.5	15100	13500	12000	9700	7500		5.5
6	13100	13000	11500	9700	7500	6100	6
6.5	11700	12000	11000	9000	7500	6100	6.5
7	10500	10500	10500	8500	7000	6100	7
8	8000	8500	8500	7600	6500	5500	8
9		6800	7000	7000	6000	5000	9
10		5700	5800	5800	5500	4600	10
11		4600	4900	5000	5000	4100	11
12		4100	4200	4200	4200	3900	12
14			3500	3200	3200	3200	14
16			2500	2500	2500	2500	16
18				1900	2000	1900	18
20				1550	1550	1500	20
22					1200	1150	22
24					950	1000	24
26						750	26
Number of lines	8	6	6	4	3	3	Number of lines

1. Value specified in table is rated lifting capacity of the crane under the condition that the crane parks on the flat and solid ground under leveling state.
2. Values above the thick solid line are determined by the strength of the crane and below the thick solid line are determined by the stability of the crane.
3. Rated lifting capacity determined by the stability shall comply with ISO4305.
4. Rated lifting capacity in the table includes the weights of lifting hook and hanger (main hook: 250kg; auxiliary hook: 90kg).
5. Rated lifting capacity when pulley at boom tip is used can not exceed 3500 kg, after the jib installs, rated lifting capacity of the boom shall be a value that a total is subtracted by the weight of jib (450 kg).
6. If actual boom length and range are both between two values in the table, the larger value is used to determine the lifting capacity.

Unit:Kg

Prerequisites:
① Boom operating condition (fully extended boom length + jib length),max. length is 33m+8m
② The span of outrigger is 5.1m×6m
③ Counterweight is 2.5T

Main boom elevation angle(°)	Mian boom + Jib					
	0°		15°		30°	
	Overside rear lifting weight (kg)	Liftng weight at right ahead (kg)	Overside rear lifting weight (kg)	Liftng weight at right ahead (kg)	Overside rear lifting weight (kg)	Liftng weight at right ahead (kg)
80	3000	3000	2000	2000	1550	1550
78	2850	2850	2000	2000	1550	1550
76	2750	2750	1850	1850	1450	1450
74	2650	2650	1800	1750	1400	1400
72	2550	2550	1750	1650	1350	1350
70	2400	2400	1600	1500	1300	1300
68	2300	1950	1550	1300	1250	1250
66	2150	1550	1450	1250	1200	1200
64	2000	1250	1350	1050	1150	1000
62	1850	1050	1250	900	1100	850
60	1700	850	1150	800	1050	650
58	1600	650	1050	650	1000	500
56	1450	500	1000	500	950	400
54	1250	400	950	400	900	300
52	1100	300	900	300	850	250
50	980	200	850	200	700	200
45	700		550		500	
40	500		450		400	

https://truckmanualshub.com/

STC200 TRUCK CRANE

WHEEL CRANE FAMILY MAP

TRUCK CRANE

STC200
Maximum Load Capacity: 20t
Telescopic Boom: 4 Sections, 10.6-33m

STC250
Maximum Load Capacity: 25t
Telescopic Boom: 4 Sections, 10.85-33.5m

STC250H
Maximum Load Capacity: 25t
Telescopic Boom: 5 Sections, 10.5-39.5m

STC300S
Maximum Load Capacity: 30t
Telescopic Boom: 5 Sections, 10.6-40.5m

STC300TH
Maximum Load Capacity: 30t
Telescopic Boom: 4 Sections, 10.6-33.5m

STC300H
Maximum Load Capacity: 30t
Telescopic Boom: 5 Sections, 10.5-39.5m

STC500
Maximum Load Capacity: 50t
Telescopic Boom: 5 Sections, 11.5-43m

STC550
Maximum Load Capacity: 55t
Telescopic Boom: 5 Sections, 11.5-43m

STC600S
Maximum Load Capacity: 60t
Telescopic Boom: 5 Sections, 11.3-43.5m

STC750
Maximum Load Capacity: 75t
Telescopic Boom: 5 Sections, 11.8-45m

STC800S
Maximum Load Capacity: 80t
Telescopic Boom: 5 Sections, 12.2-47m

STC1000
Maximum Load Capacity: 100t
Telescopic Boom: 5 Sections, 13.5-52m

STC1000C
Maximum Load Capacity: 100t
Telescopic Boom: 6 Sections, 13.25-60m

STC1000S
Maximum Load Capacity: 100t
Telescopic Boom: 5 Sections, 12.26-56m

STC1200S
Maximum Load Capacity: 120t
Telescopic Boom: 7 Sections, 12.6-63.5m

STC1300C
Maximum Load Capacity: 130t
Telescopic Boom: 6 Sections, 13.3-60m

STC1600
Maximum Load Capacity: 160t
Telescopic Boom: 6 Sections, 13.4-62m

STC2200
Maximum Load Capacity: 220t
Telescopic Boom: 6 Sections, 14.55-68m

ALL TERRAIN CRANE

SAC1800
Maximum Load Capacity: 180t
Telescopic Boom: 6 Sections, 13.5-62m

SAC2200
Maximum Load Capacity: 220t
Telescopic Boom: 6 Sections, 13.5-62m

SAC2600
Maximum Load Capacity: 260t
Telescopic Boom: 6 Sections, 15.65-73m

SAC3000
Maximum Load Capacity: 300t
Telescopic Boom: 7 Sections, 15.4-80m

SAC3500
Maximum Load Capacity: 350t
Telescopic Boom: 6 Sections, 16.2-70m

SAC8000
Maximum Load Capacity: 600t
Telescopic Boom: 7 Sections, 17.1-90m

ROUGH-TERRAIN CRANE

SRC250
Maximum Load Capacity: 25t
Telescopic Boom: 4 Sections, 9.9-31.5m

SRC350
Maximum Load Capacity: 35t
Telescopic Boom: 4 Sections, 10-31.5m

SRC550
Maximum Load Capacity: 55t
Telescopic Boom: 4 Sections, 11.25-34.5m

SRC550H
Maximum Load Capacity: 55t
Telescopic Boom: 5 Sections, 11.5-43m

SRC750
Maximum Load Capacity: 75t
Telescopic Boom: 5 Sections, 11.8-45m

SRC1200
Maximum Load Capacity: 120t
Telescopic Boom: 5 Sections, 13-49m

https://truckmanualshub.com/

Quality Changes the World

SANY AUTOMOBILE HOISTING MACHINERY

Address: SANY Industrial Park, Jinzhou Development Zone,
Changsha, Hunan, China.
Service Hotline: 4006098318
Email: crd@sany.com.cn
For more information, please visit: www.sanygroup.com

For our consistent improvement in techonology, specifications may change without notice.
The machines illustrated may show optional equipment which can be supplied at additional cost.

Version: 2015.08

Distributed By: