https://truckmanualshub.com/

An Oshkosh Corporation Company

Operation and Safety Manual

Original Instructions - Keep this manual with the machine at all times.

Model(s)
AM Series
20AM
25AM
30AM
36AM
41AM

ANSI

P/N - 3121211
November 12, 2014

https://truckmanualshub.com/

NOTES:

https://truckmanualshub.com/

FOREWARD

This manual is a very important tool! Keep it with the machine at all times.

The purpose of this manual is to provide owners, users, operators, lessors, and lessees with the precautions and operating procedures essential for the safe and proper machine operation for its intended purpose.

Due to continuous product improvements, JLG Industries, Inc. reserves the right to make specification changes without prior notification. Contact JLG Industries, Inc. for updated information.

https://truckmanualshub.com/

SAFETY ALERT SYMBOLS AND SAFETY SIGNAL WORDS

This is the Safety Alert Symbol. It is used to alert you to the potential personal injury hazards. Obey all safety messages that follow this symbol to avoid possible injury or death

DANGER

INDICATES AN IMMINENTLY HAZARDOUS SITUATION. IF NOT AVOIDED, WILL RESULT IN SERIOUS INJURY OR DEATH. THIS DECAL WILL HAVE A RED BACKGROUND.

WARNING

INDICATES A POTENTIALITY HAZARDOUS SITUATION. IF NOT AVOIDED, COULD RESULT IN SERIOUS INJURY OR DEATH. THIS DECAL WILL HAVE AN ORANGE BACKGROUND.

CAUTION

INDICATES A POTENTIALITY HAZARDOUS SITUATION. IF NOT AVOIDED, MAY RESULT IN MINOR OR MODERATE INJURY. IT MAY ALSO ALERT AGAINST UNSAFE PRACTICES. THIS DECAL WILL HAVE A YELLOW BACKGROUND.

NOTICE

INDICATES INFORMATION OR A COMPANY POLICY THAT RELATES DIRECTLY OR INDIRECTLY TO THE SAFETY OF PERSONNEL OR PROTECTION OF PROPERTY.

https://truckmanualshub.com/

⚠ WARNING

THIS PRODUCT MUST COMPLY WITH ALL SAFETY RELATED BULLETINS. CONTACT JLG INDUSTRIES, INC. OR THE LOCAL AUTHORIZED JLG REPRESENTATIVE FOR INFORMATION REGARDING SAFETY RELATED BULLETINS WHICH MAY HAVE BEEN ISSUED FOR THIS PRODUCT.

NOTICE

JLG INDUSTRIES, INC. SENDS SAFETY RELATED BULLETINS TO THE OWNER OF RECORD OF THIS MACHINE. CONTACT JLG INDUSTRIES, INC. TO ENSURE THAT THE CURRENT OWNER RECORDS ARE UPDATED AND ACCURATE.

NOTICE

JLG INDUSTRIES, INC. MUST BE NOTIFIED IMMEDIATELY IN ALL INSTANCES WHERE JLG PRODUCTS HAVE BEEN INVOLVED IN AN ACCIDENT INVOLVING BODILY INJURY OR DEATH OF PERSONNEL OR WHEN SUBSTANTIAL DAMAGE HAS OCCURRED TO PERSONAL PROPERTY OR THE JLG PRODUCT.

For :

- Accident Reporting
- Product Safety Publications
- Current Owner Updates
- Questions Regarding Product Safety
- Standards and Regulations Compliance Information
- Questions Regarding Special Product Applications
- Questions Regarding Product Modifications

Contact :

Product Safety and Reliability Department
JLG Industries, Inc.
1 JLG Drive
McConnellsburg, PA 17233

or Your Local JLG Office
(See addresses on manual rear cover)

In USA:

Toll Free: 877-JLG-SAFE (877-554-7233)

Outside USA:

Phone: 717-485-5161
E-mail: ProductSafety@JLG.com

https://truckmanualshub.com/

REVISION LOG

Original Issue of Manual . . . . . July 6, 2005
Manual Revised . . . . . June 30, 2006
Manual Revised . . . . . June 4, 2007
Manual Revised . . . . . May 5, 2008
Manual Revised . . . . . January 5, 2010
Manual Revised . . . . . June 14, 2010
Manual Revised . . . . . November 12, 2014

https://truckmanualshub.com/

SECTION - PARAGRAPH, SUBJECT **PAGE**

SECTION - 1 - SAFETY PRECAUTIONS

1.1 GENERAL 1-1
1.2 TRANSPORTING 1-1
Transport 1-1
Tipping Hazards 1-2
Tilt Back Procedure 1-4
1.3 PRE-OPERATION 1-5
General 1-5
Electrocution Hazard 1-6
1.4 OPERATION 1-7
1.5 MAINTENANCE SAFETY PRECAUTIONS 1-10

SECTION - 2 - USER RESPONSIBILITIES, MACHINE PREPARATION, AND INSPECTION

2.1 PERSONNEL TRAINING 2-1
Operator Training 2-1
Training Supervision 2-1
Operator Responsibility 2-1
2.2 PREPARATION, INSPECTION, AND MAINTENANCE 2-2
2.3 PRE-START INSPECTION 2-4

SECTION - PARAGRAPH, SUBJECT **PAGE**

2.4 FUNCTION CHECK 2-5
2.5 DAILY WALK-AROUND INSPECTION 2-5
General 2-5

SECTION - 3 - MACHINE CONTROLS AND INDICATORS

3.1 GENERAL 3-1
3.2 CONTROLS AND INDICATORS 3-1
Ground Control Station 3-1
Manual Descent Valve 3-3
Platform Control Station 3-3
3.3 DECAL INSTALLATIONS 3-5

SECTION - 4 - MACHINE OPERATION

4.1 DESCRIPTION 4-1
4.2 OPERATING CHARACTERISTICS AND LIMITATIONS 4-1
Capacities 4-1
4.3 BATTERY CHARGING & MAINTENANCE - (DC MODELS ONLY) 4-2
Battery Maintenance and Safety 4-2
Battery Charger Operation 4-3
Abnormal Cycle Indicator LED 4-4

https://truckmanualshub.com/

SECTION - PARAGRAPH, SUBJECT **PAGE**

4.4 MACHINE SET-UP AND OPERATION....4-5
Caster Brake Operation 4-5
Outrigger Installation 4-6
Platform Loading 4-8
Platform Operation 4-8
4.5 QUICK-CHANGE PLATFORM MOUNTS....4-9
Platform Removal 4-9
Platform Installation 4-10
4.6 MACHINE SHUT DOWN AND PARK 4-10
4.7 TRANSPORT, LIFTING AND TIE DOWN.... 4-11
General 4-11
Transporting by Pushing.... 4-11
Tilt-Back Assembly Set-up (AM36/AM41) - Machines Prior to S/N - 0900031618 4-11
Tilt-Back Assembly Set-up (AM36/AM41) - Machines S/N - 0900031618 to Present 4-15
Pickup Truck Loading Device (Option).... 4-19
Lifting.... 4-23
Machine Tie Down.... 4-23

SECTION - PARAGRAPH, SUBJECT **PAGE**

SECTION - 5 - OPTIONAL EQUIPMENT

5.1 OPTIONAL EQUIPMENT.... 5-1
22" x 25" Quick-Change Platform 5-1
26" x 26" Quick-Change Platform 5-1
28" x 26" Quick-Change Platform 5-1
25" x 26" Step-in Molded Platform w/Swing-up Gate 5-1
Tool Tray 5-1
Fluorescent Tube Caddy 5-1
Crane Hook.... 5-1
Straddle Extension.... 5-1
Ladder for Straddle Extension 5-1
Extra Power Pack (Battery, Charger & Case) ... 5-2
Platform Auxiliary Power Lowering Device.... 5-2
Laser Positioning Device 5-2
Hour Meter 5-2
Machine Cycle Counter Meter 5-2

https://truckmanualshub.com/

SECTION - PARAGRAPH, SUBJECT **PAGE**

5.2 AM-SE - STRADDLE EXTENSION – INSTALLATION 5-3
Description 5-3
Straddle Adaptor Wiring Components 5-3
Straddle Adaptor Wiring Installation 5-3
AM-SE - Straddle Extension – Set-up And Operation 5-7
Straddle Extension - Components. 5-7
Mounting - Straddle Extension to AM 5-7
Positioning Straddle Unit and Lifting AM Machine. 5-9
Lowering AM Machine on Straddle Unit 5-10
Straddle and AM Machine Disassembly 5-11

SECTION - 6 - EMERGENCY PROCEDURES

6.1 GENERAL INFORMATION. 6-1
6.2 EMERGENCY OPERATION 6-1
Operator Unable to Control Machine. 6-1
Platform Caught Overhead 6-1
Righting of Tipped Machine 6-1
6.3 INCIDENT NOTIFICATION 6-2

SECTION - PARAGRAPH, SUBJECT **PAGE**

SECTION - 7 - GENERAL SPECIFICATIONS AND OPERATOR MAINTENANCE

7.1 INTRODUCTION. 7-1
7.2 GENERAL SPECIFICATIONS 7-2
Machine Specifications 7-2
Electrical Specifications 7-3
Battery Specifications 7-3
Platform Data 7-4
Machine Component Weights 7-5
Serial Number Locations 7-5
7.3 OPERATOR MAINTENANCE 7-6
Lubrication 7-6
Battery Maintenance. 7-7
7.4 SUPPLEMENTAL INFORMATION 7-10

SECTION - 8 - INSPECTION AND REPAIR LOG

LIST OF FIGURES

2-1. Daily Walk-Around inspection. 2-7
3-1. Ground Control Station.. 3-2
3-2. Manual Descent Valve Location.. 3-3
3-3. Manual Descent Valve Location.. 3-4
3-4. Platform Control Station.. 3-4

https://truckmanualshub.com/

SECTION - PARAGRAPH, SUBJECT **PAGE**

3-5. Decal Installation. (ANSI/CSA) (Machines prior to S/N-0900031618) 3-5
3-6. Decal Installation (CE) (Machines prior to S/N-0900031618) 3-8
3-7. Decal Installation. (ANSI/CSA) (Machines S/N-0900031618 to Present)..... 3-11
3-8. Decal Installation (CE) (Machines S/N-0900031618 to Present)..... 3-14
4-1. Battery Fluid Level. 4-2
4-2. Battery Box and Charger Assembly. (D.C. Model Only).....4-3
4-3. Dual Voltage Charger - Front Panel. 4-4
4-4. Setting & Releasing Caster Brake 4-5
4-5. Outrigger Installation. 4-7
4-6. Quick Change Platform Mount. 4-9
4-7. Tilt-Back Assembly Set-Up..... 4-12
4-8. Tilt-Back Assembly Set-Up - Machines S/N - 0900031618 to Present. 4-16
4-9. Tilt-Back Assembly Set-Up - Machines S/N - 0900031618 to Present..... 4-17
4-10. Tilt-Back Assembly Set-Up - Machines S/N - 0900031618 to Present..... 4-18
4-11. Loading Machine onto Bed of Pick-Up Truck. . . 4-20
5-1. Hour Meter Location. (Option) 5-2

SECTION - PARAGRAPH, SUBJECT **PAGE**

5-2. SE-Adapter - Wiring - Grommet & Spring Clip Mounting Hole Locations. (Same For Both Sides)..... 5-5
5-3. Straddle Adapter Wiring Harness to AM Wiring Connections. 5-6
5-4. Straddle Extension Component Assembly..... 5-8
5-5. Side Lifting Rail - Quick Release Pins..... 5-11

LIST OF TABLES

1-1 Minimum Approach Distance (M.A.D.) 1-6
2-1 Inspection and Maintenance Table 2-3
3-1 Decal Installation Chart (ANSI and CSA)..... 3-6
3-2 Decal Installation Chart (CE Specification) 3-9
3-3 Decal Installation Chart (ANSI and CSA).....3-12
3-4 Decal Installation Chart (CE Specification) 3-15
4-1 Maximum Platform Capacity..... 4-8
4-2 AM Machine Gross Weights..... 4-23
7-1 Lubrication Specifications 7-6
7-2 Lubrication Intervals for Various Components... 7-9
8-1 Inspection and Repair Log..... 8-1

https://truckmanualshub.com/

SECTION 1. SAFETY PRECAUTIONS

1.1 GENERAL

This section outlines the necessary precautions for proper and safe machine operation and maintenance. For proper machine use, it is mandatory that a daily routine is established based on the content of this manual. A maintenance program using the information provided in this manual and the Service and Maintenance Manual must also be established by a qualified person and followed to ensure that the machine is safe to operate.

The owner/user/operator/lessor/lessee of the machine should not operate the machine until this manual has been read, training is accomplished, and operation of the machine has been completed under the supervision of an experienced and qualified operator. If there is a question with regard to safety training, inspection, maintenance and operation, please contact JLG Industries, Inc. ("JLG").

⚠ WARNING

MODIFICATION OR ALTERATION OF AN AERIAL WORK PLATFORM SHALL BE MADE ONLY WITH PRIOR WRITTEN PERMISSION FROM THE MANUFACTURER.

1.2 TRANSPORTING

⚠ WARNING

FAILURE TO COMPLY WITH SAFETY PRECAUTIONS LISTED IN THIS SECTION AND ON MACHINE MAY RESULT IN MACHINE DAMAGE, PERSONNEL INJURY OR DEATH AND IS A SAFETY VIOLATION.

Transport

- The platform must be completely empty of tools and debris.
- Ensure platform is fully lowered. Remove and stow outriggers.
- Never allow personnel in platform while moving machine.
- To move machine use handles provided on the mast crossbar.

https://truckmanualshub.com/

Tipping Hazards

WARNING

FAILURE TO COMPLY WITH THE FOLLOWING TIPPING HAZARD INSTRUCTIONS COULD CAUSE THE UNIT TO TIP OVER OR BE HARD TO CONTROL WHEN BEING MOVED, WHICH COULD RESULT IN SERIOUS INJURY OR DEATH.

- On a level surface, always travel with the platform end leading the way.
- Watch for obstructions around machine and overhead.
- Check travel path for persons, holes, bumps, drop-offs, obstructions, debris, and coverings which may conceal other hazards.
- Before placing machine on floors, trucks and other surfaces, check allowable capacity of surfaces.

https://truckmanualshub.com/

- Two persons are required on slopes up to 5°. A forklift must be used when moving units on slopes greater than 5°.
- Always travel up or down a slope with the platform end of the machine positioned towards the low side of the slope. the operator and assistant must walk beside to guide the machine.
- Never position the unit sideways on a slope.
- Do not elevate the platform or move the machine on a soft surface.
- Use caution and check clearances when moving machine in restricted or close quarters.
- Always use an assistant when moving machine in areas where vision is obstructed.
- Keep non-operating personnel at least 6 feet (1.8 m) away from machine during moving operations.

https://truckmanualshub.com/

Tilt Back Procedure

(AM36 & AM41 Machines Only)

- The platform must be completely empty of tools and debris.
- Ensure platform is fully lowered. Remove and stow outriggers.
- Tilt machine back only on a flat, firm and level surface.

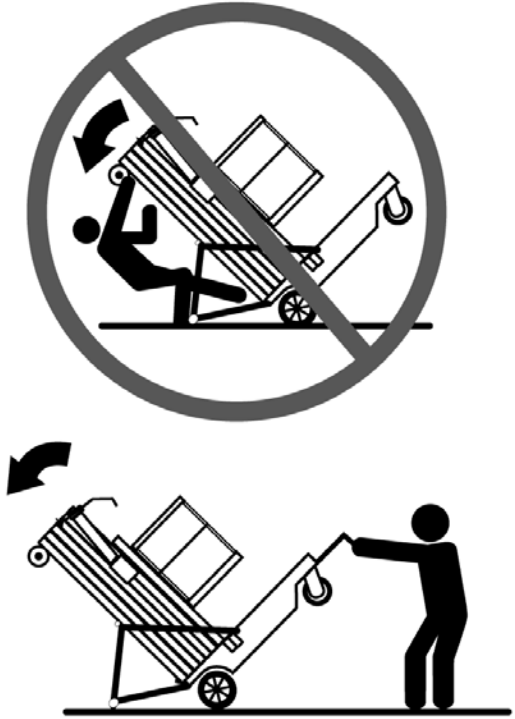

https://truckmanualshub.com/

1.3 PRE-OPERATION

General

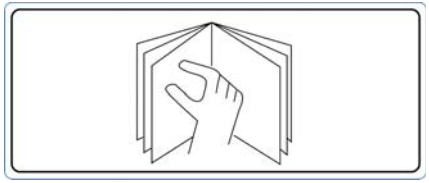

- Read and understand this manual before operating the machine.
- Only authorized and qualified personnel can operate the machine.
- Do not operate this machine until complete training is performed by authorized personnel.
- Before operation check work area for machine traffic such as forklifts, cranes, and other construction equipment.
- Set-up machine for operation only on a smooth, firm surface on which the machine is capable of being leveled.
- Be sure that operators of other overhead and floor level machines are aware of the aerial work platform's presence. Disconnect power to overhead cranes.
- The operator is to take safety measures to avoid all hazards in the work area prior to machine operation.
- Do not operate this machine until it has been serviced and maintained according to requirements specified in the Service and Maintenance manual.
- Before machine operation perform inspections and functional checks. Refer to in Section 2 of this manual for detailed instructions.

https://truckmanualshub.com/

- Warn personnel not to work, stand, or walk under a raised platform. Position barricades on floor, if necessary.
- Be sure all safety devices are operating properly. Modification of these devices is a safety violation.
- Never operate machine in high wind, rain or snow.
- Do not operate or raise the platform while on trucks, trailers, railway cars, floating vessels, scaffolds or other equipment unless approved by JLG.
- Approved head gear must be worn by all operating and ground personnel.
- Read, understand, and obey all dangers, warnings, cautions and operating instructions on the machine and in this manual.
- All operating personnel must be familiar with emergency controls and emergency operation of the machine as specified in this manual.

Electrocution Hazard

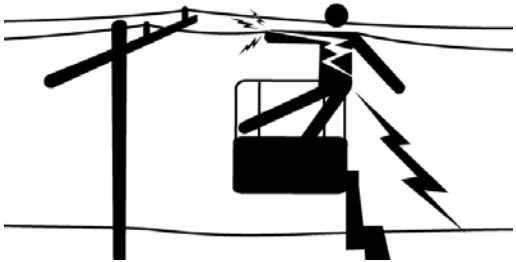

Table 1-1. Minimum Approach Distance (M.A.D.)

VOLTAGE RANGE (PHASE TO PHASE)	MINIMUM APPROACH DISTANCE - Feet (m)
0-50KV	10 (3)
Over 50KV to 200KV	15 (5)
Over 200KV to 350KV	20 (6)
Over 350KV to 500KV	25 (8)
Over 500KV to 750KV	35 (11)
Over 750KV to 1000KV	45 (14)

NOTE: *This Minimum Approach Distance shall apply except where employer, local, or governmental regulations are more stringent.*

https://truckmanualshub.com/

Maintain a clearance of at least 10 ft (3m) between any part of the machine and its occupants, their tools, and their equipment from any electrical line or apparatus carrying up to 50,000 volts. One foot (0.3m) additional clearance is required for every additional 30,000 volts or less.

The minimum approach distance may be reduced if insulating barriers are installed to prevent contact, and if the barriers are rated for the voltage of the line being guarded. These barriers shall not be part of *(or attached to)* the machine. The minimum approach distance shall be reduced to a distance within the designed working dimensions of the insulating barrier. This determination shall be made by a qualified person in accordance with employer, local, or governmental requirements for work practices near energized equipment.

1.4 OPERATION

- Do not operate any machine on which instruction placards or decals are missing or illegible.
- Never exceed the maximum platform capacity.
- Operate AC units with an extension cord rated at a minimum of 15 amps.
- Prior to entering the platform ensure all leveling jacks have been properly installed and the unit's base frame is level according to the bubble leveling indicator on base frame, and all wheels are completely off the ground.
- While operating the machine, always look in the direction of machine movement.
- Never operate a machine that is not operating properly. If a malfunction occurs, shut down the machine.
- When applicable by reason of local regulations or job-site/employer safety rules, personnel in the platform shall at all times wear approved fall protection devices. The authorized lanyard attachment is on the side of the machine's mast.

https://truckmanualshub.com/

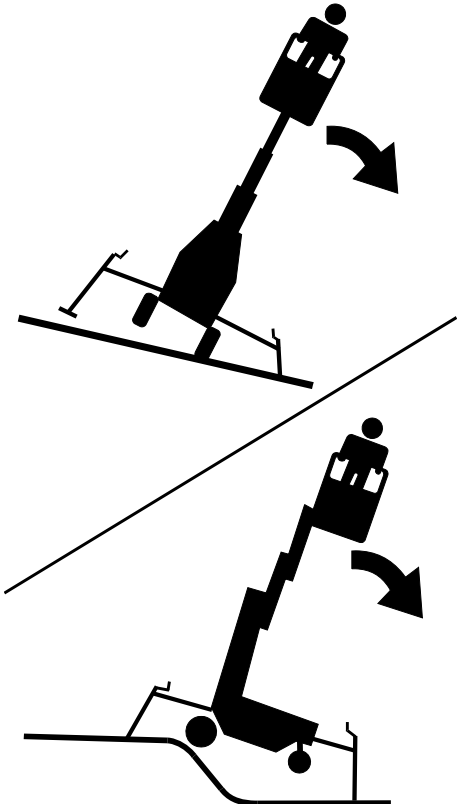

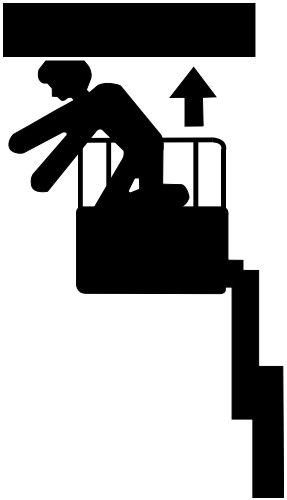

- Check work area for clearance overhead, on sides, and bottom of platform when lifting and lowering platform.
- Never use the mast assembly to enter or leave the platform.
- Do not increase the platform size with unauthorized deck extensions or attachments.
- Never attempt to use the machine as a crane.
- Do not tie off machine to any adjacent structure.

https://truckmanualshub.com/

- Platform to structure transfers at elevated positions are discouraged. Where transfer is necessary, enter and exit through the gate only with the platform within 1 foot (0.3 m) of the adjacent safe and secure structure. 100% tie-off is also required in this situation using (2) lanyards. One lanyard must be attached to the platform, the second lanyard attached to the structure. The lanyard connected to the platform must not be disconnected until the transfer to the structure is complete.
- Do not allow personnel to tamper with, or operate the machine from the ground with personnel in the platform, except in an emergency.
- During operation, keep all body parts inside platform railing.
- Never position ladders, steps, or similar items on unit to provide additional reach for any purpose.
- When working from platform both feet must be firmly positioned on deck.
- Do not perform work that will subject unit to a horizontal force or create a swaying motion of the platform.
- Always ensure that power tools are properly stowed and never left hanging by their cord from the platform work area.
- Avoid any build up of debris on the platform floor. keep mud, oil, grease and other slippery substances from footwear and platform floor.

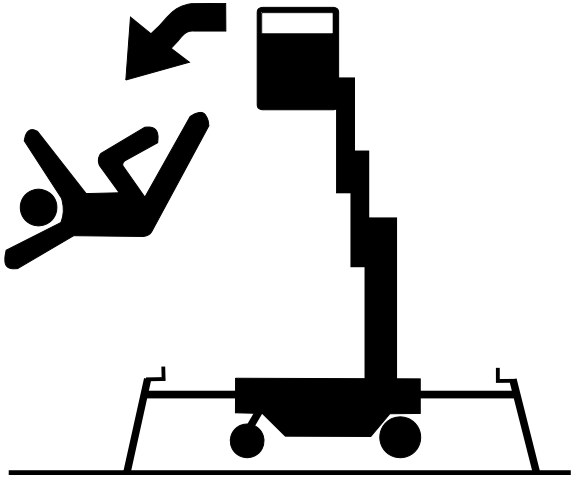

- Do not operate machine from platform without the gate in place and properly closed.

https://truckmanualshub.com/

1.5 MAINTENANCE SAFETY PRECAUTIONS

WARNING

FAILURE TO COMPLY WITH SAFETY PRECAUTIONS LISTED IN THIS SECTION COULD RESULT IN MACHINE DAMAGE, PERSONNEL INJURY OR DEATH AND IS A SAFETY VIOLATION.

- Remove all rings, watches, and jewelry when performing any maintenance.
- Do not wear long hair unrestrained, or loose fitting clothing and neckties which are apt to become caught on or entangled in equipment.
- Observe and obey all danger, warning, caution and other instructions on machine.
- Keep standing surfaces and hand holds free of oil, grease, water, etc.
- Never work under an elevated platform until platform has been safely restrained from any movement by blocking or overhead sling.
- Before making adjustments, lubricating or performing any other maintenance, shut off all power controls.
- Battery should always be disconnected during replacement of electrical components.
- Keep all support equipment and attachments stowed in their proper place.
- Use only approved, nonflammable cleaning solvents.

https://truckmanualshub.com/

SECTION 2. USER RESPONSIBILITIES, MACHINE PREPARATION, AND INSPECTION

2.1 PERSONNEL TRAINING

The aerial platform is a personnel handling device; so it is necessary that it be operated and maintained only by trained personnel.

Persons under the influence of drugs or alcohol or who are subject to seizures, dizziness or loss of physical control must not operate this machine.

Operator Training

Operator training must cover:

1. Use and limitations of the controls in the platform and at the ground, emergency controls and safety systems.
2. Control labels, instructions, and warnings on the machine.
3. Rules of the employer and government regulations.
4. Use of approved fall protection device.
5. Enough knowledge of the mechanical operation of the machine to recognize a malfunction or potential malfunction.
6. The safest means to operate the machine where overhead obstructions, other moving equipment, and obstacles, depressions, holes, dropoffs.
7. Means to avoid the hazards of unprotected electrical conductors.
8. Specific job requirements or machine application.

Training Supervision

Training must be done under the supervision of a qualified person in an open area free of obstructions until the trainee has developed the ability to safely control and operate the machine.

Operator Responsibility

The operator must be instructed that he/she has the responsibility and authority to shut down the machine in case of a malfunction or other unsafe condition of either the machine or the job site.

https://truckmanualshub.com/

2.2 PREPARATION, INSPECTION, AND MAINTENANCE

The following table covers the periodic machine inspections and maintenance recommended by JLG Industries, Inc. Consult local regulations for further requirements for aerial work platforms. The frequency of inspections and maintenance must be increased as necessary when the machine is used in a harsh or hostile environment, if the machine is used with increased frequency, or if the machine is used in a severe manner.

NOTICE

JLG INDUSTRIES, INC. RECOGNIZES A FACTORY-TRAINED SERVICE TECHNICIAN AS A PERSON WHO HAS SUCCESSFULLY COMPLETED THE JLG SERVICE TRAINING SCHOOL FOR THE SPECIFIC JLG PRODUCT MODEL.

https://truckmanualshub.com/

Table 2-1. Inspection and Maintenance Table

TYPE	FREQUENCY	PRIMARY RESPONSIBILITY	SERVICE QUALIFICATION	REFERENCE
Pre-Start Inspection	Before using each day; or whenever there's an Operator change.	User or Operator	User or Operator	Operator and Safety Manual
Pre-Delivery Inspection *(See Note Below)*	Before each sale, lease, or rental delivery.	Owner, Dealer, or User	Qualified JLG Mechanic	Service and Maintenance Manual and applicable JLG inspection form
Frequent Inspection	In service for 3 months or 150 hours, whichever comes first; or Out of service for a period of more than 3 months; or Purchased used.	Owner, Dealer, or User	Qualified JLG Mechanic	Service and Maintenance Manual and applicable JLG inspection form
Annual Machine Inspection	Annually, no later than 13 months from the date of prior inspection.	Owner, Dealer, or User	Factory-Trained Service Technician *(Recommended)*	Service and Maintenance Manual and applicable JLG inspection form
Preventative Maintenance	At intervals as specified in the Service and Maintenance Manual.	Owner, Dealer, or User	Qualified JLG Mechanic	Service and Maintenance Manual
NOTE: *Inspection forms are available from JLG. Use the Service and Maintenance Manual to perform inspections.*				

https://truckmanualshub.com/

2.3 PRE-START INSPECTION

The Pre-Start Inspection should include each of the following:

1. **Cleanliness –** Check all surfaces for leakage (oil, fuel, or battery fluid) or foreign objects. Report any leakage to the proper maintenance personnel.
2. **Decals and Placards –** Check all for cleanliness and legibility. Make sure none of the decals and placards are missing. Make sure all illegible decals and placards are cleaned or replaced.
3. **Operators and Safety Manuals –** Make sure a copy of the Operator and Safety Manual, AEM Safety Manual (ANSI Markets Only), and ANSI Manual of Responsibilities (ANSI Markets Only) is enclosed in the weather resistant storage container.
4. **Walk-Around Inspection –** Refer to Figure 2-1. on page 2-7.
5. **Battery –** Charge as required.
6. **Fuel –** *(Combustion Engine Powered Machines Only)* – Add proper fuel as necessary.
7. **Hydraulic Oil –** Check hydraulic oil level. Add hydraulic oil as required.
8. **Function Check –** Once “Walk-Around” Inspection is complete, perform a function check of all systems in an area free of overhead and ground level obstructions. Refer to Section 3 for specific instructions.

⚠ WARNING

IF MACHINE DOES NOT OPERATE PROPERLY, TURN OFF MACHINE IMMEDIATELY! REPORT PROBLEM TO PROPER MAINTENANCE PERSONNEL. DO NOT OPERATE MACHINE UNTIL IT IS DECLARED SAFE FOR OPERATION.

https://truckmanualshub.com/

2.4 FUNCTION CHECK

The function check of all systems should be performed in an area free of overhead and ground level obstructions. Perform a function check as follows:

1. Set-up machine for operation according to instructions in Section 3. Install outriggers, level machine, make sure all wheels are off the ground, etc.
2. Enter platform, raise and lower platform 2 ft to 3 ft *(.61m to .92 m)* several times. Check for smooth elevation and lowering of platform.
3. With platform completely lowered, check hydraulic oil level in reservoir at ground control station. Maintain an oil level to "Fill to Line" indicator on side of reservoir. NEVER USE HYDRAULIC BRAKE FLUID.

2.5 DAILY WALK-AROUND INSPECTION

General

Begin Walk-Around Inspection at item 1 *(See Figure 2-1. on page 2-7)*. Continue around machine checking each item in this check list.

⚠ CAUTION

TO AVOID POSSIBLE INJURY, BE SURE MACHINE POWER IS OFF DURING WALK-AROUND INSPECTION.

NOTICE

DO NOT OVERLOOK VISUAL INSPECTION OF CHASSIS UNDERSIDE. CHECKING THIS AREA MAY RESULT IN DISCOVERY OF CONDITIONS WHICH COULD CAUSE EXTENSIVE MACHINE DAMAGE.

NOTE: *On each item, make sure there are no loose or missing parts. That they are securely fastened and that no visible damage exists in addition to any other criteria mentioned.*

1. **Front Caster Wheels** - Properly secured, wheels and casters turn freely. Brakes lock and release - prevent wheels from rolling when locked.
2. **Rear Wheels** - Properly secured. Wheels turn freely.
3. **Tiltback Wheels** - Properly secured. Wheels turn freely.

https://truckmanualshub.com/

4. **Base Frame** - Components properly secured, no loose wires dangling below base; bubble level in place and functioning properly.
5. **Tilt Back Assembly** - *(36AM/41AM Models Only)* Properly secured; no parts missing i.e.. safety pins, gas spring cylinder(s), caster wheels, etc.
6. **Battery/Charger Box Assembly** - *(DC Voltage Machines)* Proper battery electrolyte level, no cable corrosion. Battery box pivots freely when machine is tilted for transporting *(36AM/41AM Models Only)*.
7. **Outrigger Interlock Indicator LED's** - See note above.
8. **Outrigger Sockets** - Outrigger lock/release pins in place and secure, no visible damage. Outrigger interlock contacts *(inside outrigger sockets)* secure and clean.
9. **Outrigger Beams** - Outrigger interlock contacts properly installed and clean (on bottom of outrigger assembly). Leveling jacks secure to the outrigger assembly, lubricated and functioning properly.
10. **Motor/Pump/Reservoir Power Unit** - No evidence of hydraulic leaks. Check that hydraulic reservoir fluid level is filled to the "Fill to Line" mark on the side of the reservoir.
11. **Manual Release Control Valve** - See note above.
12. **Ground Controls** - Key switch operable, placards secure and legible; emergency stop switch, properly set for operation.
13. **Mast Assembly** - Inspect mast chains or cables as per note above.
14. **Platform Rail Installation** - Entry gate/bar in proper working order.
15. **Platform Assembly** - Secure to mast; Control and power cables properly tensioned and seated in control cable sheaves; control cable sheaves rotate freely.
16. **Platform Controls** - Placards secure and legible, emergency shut-off button set for operation. Operators manual enclosed in manual storage tube.

https://truckmanualshub.com/

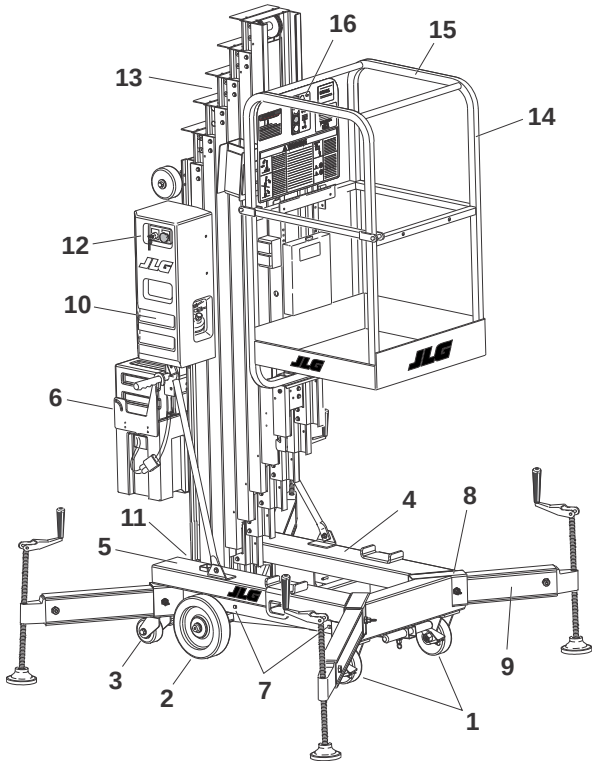

1. Caster Wheels and Brakes
2. Rear Wheel
3. Tilt Back Wheel
4. Base Frame
5. Tilt-Back Assembly (Not Shown - 36/41AM only)
6. Battery/Charger Box Assembly
7. Outrigger Interlock Indicator LED's
8. Outrigger Sockets
9. Outrigger Beams
10. Motor/Pump/Reservoir Power Unit
11. Manual Release Control Valve
12. Ground Controls
13. Mast Assembly
14. Platform Rail Installation
15. Platform Assembly
16. Platform Controls

Figure 2-1. Daily Walk-Around inspection

https://truckmanualshub.com/

NOTES:

https://truckmanualshub.com/

SECTION 3. MACHINE CONTROLS AND INDICATORS

3.1 GENERAL

NOTICE

THE MANUFACTURER HAS NO DIRECT CONTROL OVER MACHINE APPLICATION AND OPERATION. THE USER AND OPERATOR ARE RESPONSIBLE FOR CONFORMING WITH GOOD SAFETY PRACTICES.

This section provides the necessary information needed to understand control functions.

3.2 CONTROLS AND INDICATORS

Ground Control Station

(See Figure 3-1.)

NOTE: *For overnight parking or battery charging, be sure the POWER ON/OFF KEY SWITCH is positioned to OFF to prevent battery drain.*

1. POWER ON/OFF Key Switch

   A key switch located on the ground control station controls power to all functions on the machine.

2. POWER/EMERGENCY STOP

   The two position switch allows power to the platform and ground controls when RESET (ON). When pushed in (OFF), power is shut off to the platform and ground controls.

3. HYDRAULIC RESERVOIR / CIRCUIT BREAKER / FUSE *(located inside the ground control station housing)*

   The hydraulic oil level can be checked through an access hole in the side of the cover.

NOTE: *Check hydraulic oil only when platform is completely lowered and after cycling platform up/down a few times.*

https://truckmanualshub.com/

A 20 amp reset type circuit breaker is located on the cover of the electrical box on AM-AC Models.

On AM-DC Models, a 5 Amp fuse is located inside the ground control station cover.

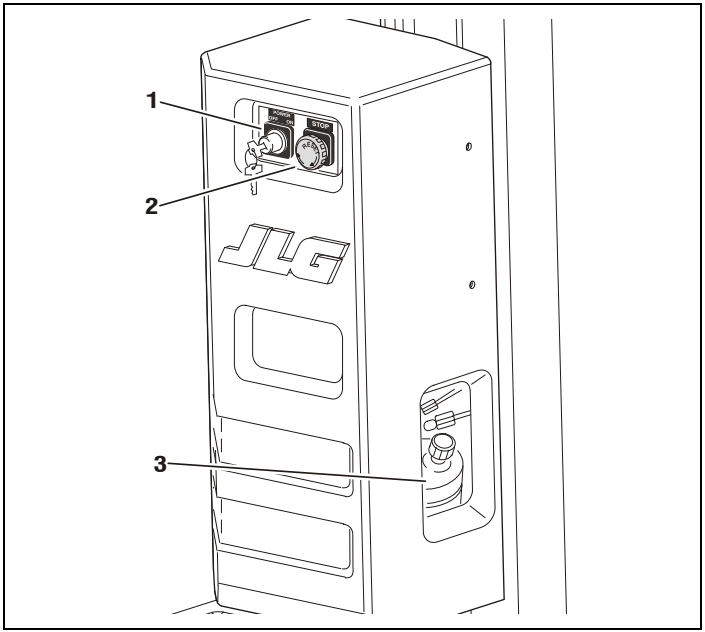

Figure 3-1. Ground Control Station.

1. Power ON/OFF Key
2. Power/Emergency Stop
3. Hydraulic Reservoir/Circuit Breaker/Fuse

https://truckmanualshub.com/

Manual Descent Valve

(See Figure 3-2. or Figure 3-3.)

Located at the rear and bottom of the base frame. This pull to release - spring loaded return valve (RED Knob), allows for lowering of the platform in an emergency or power failure.

Platform Control Station

(See Figure 3-4.)

1. POWER/EMERGENCY STOP

   A two position mushroomed shaped switch furnishes power to the platform and ground controls when RESET (ON). When pushed in (OFF), power is shut off to the platform and ground controls.

2. PLATFORM UP Button.

   When depressed simultaneously with ENABLE button raises the platform.

3. FUNCTION ENABLE Button.

   This (GREEN) button must be depressed for machine to operate.

4. PLATFORM DOWN Button.

   When depressed simultaneously with ENABLE button lowers the platform.

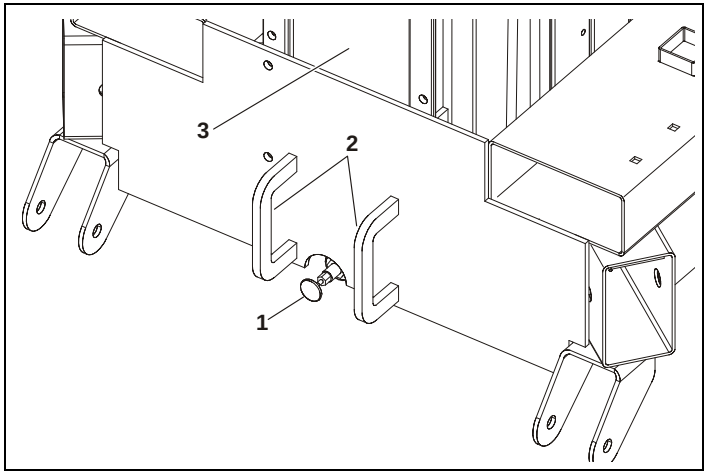

Figure 3-2. Manual Descent Valve Location.

1. Manual Descent Valve
2. Tie-Down Lugs
3. Mast

https://truckmanualshub.com/

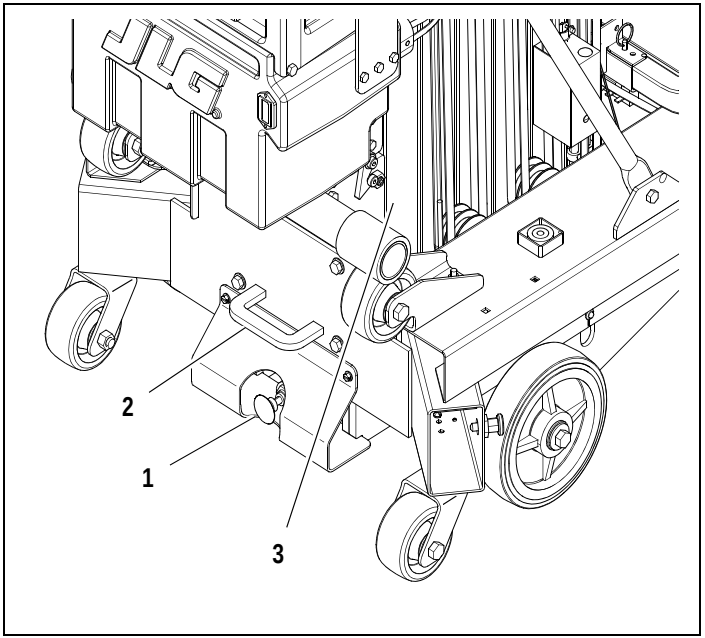

Figure 3-3. Manual Descent Valve Location.

1. Manual Descent Valve
2. Tie-Down Lugs
3. Mast

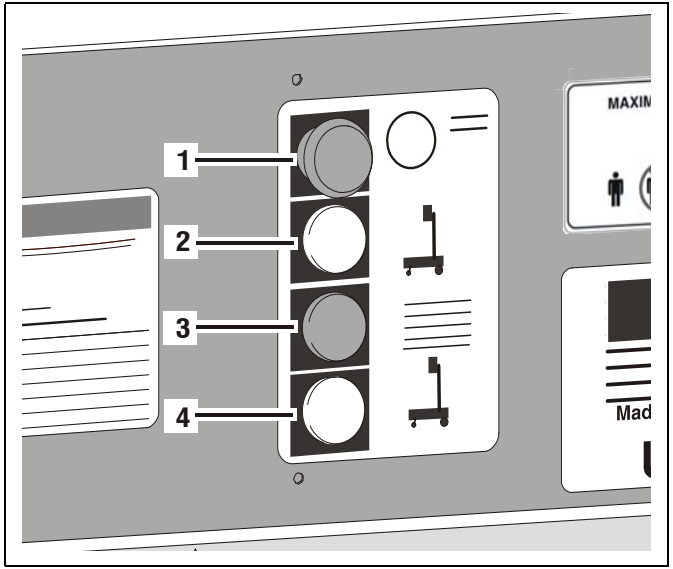

Figure 3-4. Platform Control Station.

1. Emergency Stop (RED)
2. Platform UP (WHITE)
3. Function Enable (GREEN)
4. Platform DOWN (WHITE)

https://truckmanualshub.com/

3.3 DECAL INSTALLATIONS

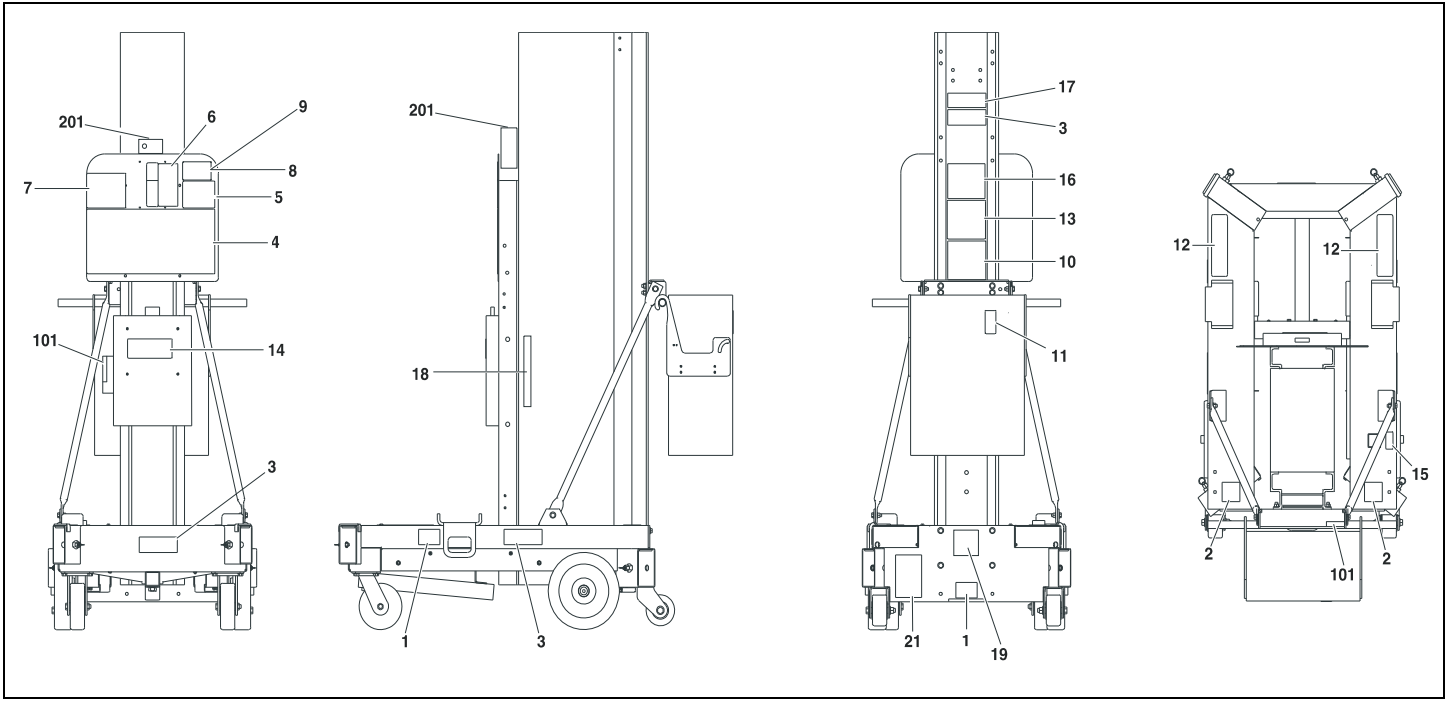

Figure 3-5. Decal Installation. (ANSI/CSA) (Machines prior to S/N-0900031618)

https://truckmanualshub.com/

Table 3-1. Decal Installation Chart (ANSI and CSA) (See Figure 3-5.)

Item	ANSI	ANSI (LAT)	ANSI (BRZ)	ANSI (JPN)	ANSI (CHI)	CSA (FRE)
1	1702300	1702300	1702300	1702300	1702300	1703814
2	1703073	1703073	1703073	1703073	1703073	1703817
3	—	1703681	—	1703681	1703681	—
4	1703778	1704027	1704019	1704084	1704075	1703778
5	1703779	—	—	—	—	—
6	1703780	1704028	1704020	1704085	1704076	1703780
7	1703781	1704029	1704021	1704086	1704077	1703781
8	1706346 (1)	1707100 (1)	1707102 (1)	1707104 (1)	1707106 (1)	1706344 (1)
9	1706344 (2)	1707101 (2)	1707103 (2)	1707105 (2)	1707107 (2)	1706366 (2)
10	1703784	1704030	1704022	1704088	1704078	1703784
11	1703785	1704031	1704023	1704089	1704079	1703785
12	1703786	1704032	1704024	1704090	1704081	1703786
13	1703787 (3)	1704033 (3)	1704025 (3)	1704091 (3)	1704082 (3)	1703787 (3)
14	1703788	1703788	1703788	1703788	1703788	1703788
15	1703789	1704034	1704026	1704092	1704083	1703789
16	1707081	1707080	1707080	1707080	1707080	1707081

https://truckmanualshub.com/

Table 3-1. Decal Installation Chart (ANSI and CSA) (See Figure 3-5.)

Item	ANSI	ANSI (LAT)	ANSI (BRZ)	ANSI (JPN)	ANSI (CHI)	CSA (FRE)
17	1703902 - 20AM 1703903 - 25AM 1703904 - 30AM 1703905 - 36AM 1703906 - 41AM					
18	1703815	—	1703828	1704151	—	1703815
19	—	—	—	—	—	—
20	—	—	—	—	—	—
21	1700584	1700584	1700584	1700584	1700584	1700584
101	3251243	3251243	3251243	3251243	3251243	3251243
201	1703994	1703994	1703994	1703994	1703994	1703994

NOTE: *(1) - 30AM/36AM/41AM Only*
(2) - 20AM/25AM Only
(3) - Installed on 36AM or 41AM machines with tiltback option only.

https://truckmanualshub.com/

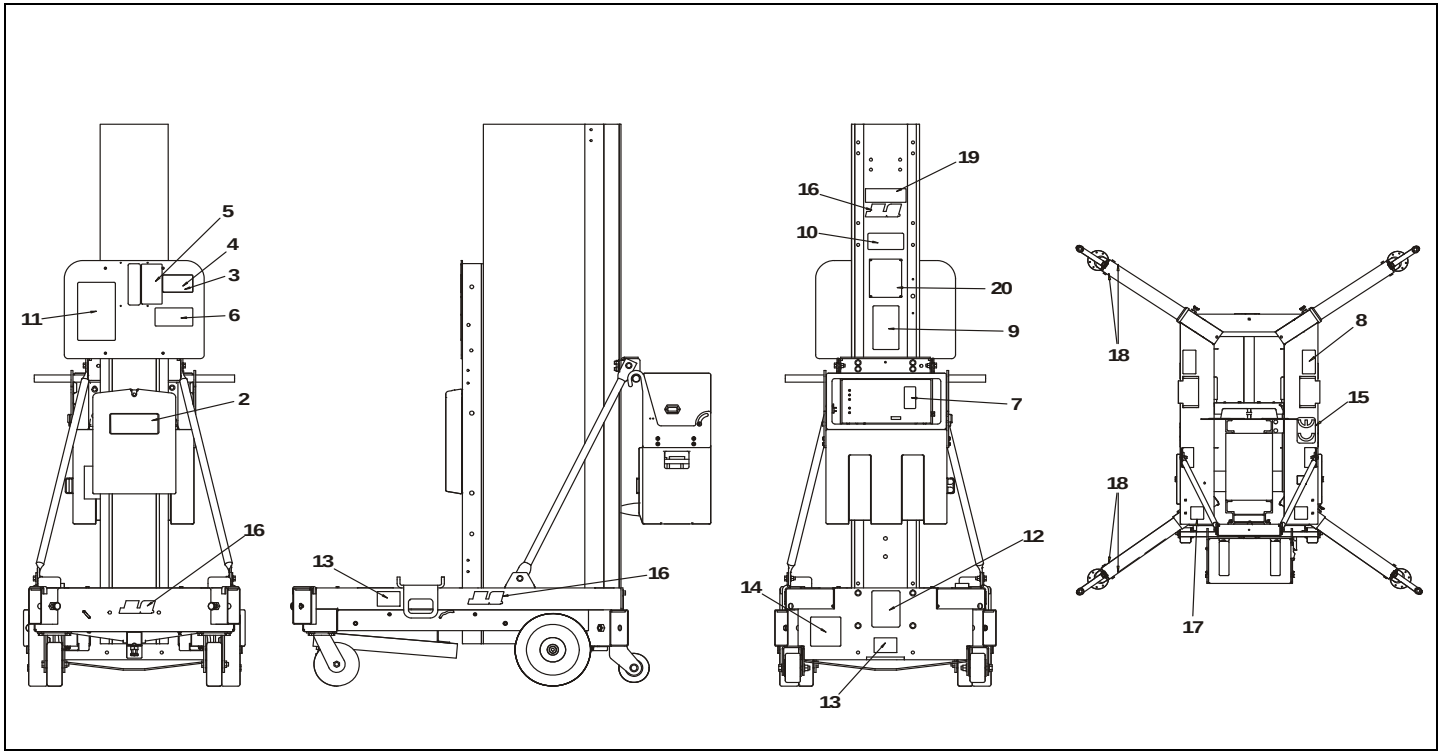

Figure 3-6. Decal Installation (CE) (Machines prior to S/N-0900031618)

https://truckmanualshub.com/

Table 3-2. Decal Installation Chart (CE Specification) (See Figure 3-6.)

Item	CE (ENG/(AUS)	CE (DUT)	CE (FRE)	CE (GER)	CE (ITA)	CE (SPA)
1	1001098588 - Decal Kit *					
2	1701509 *					
3	1704094 * (1)					
4	1704095 * (2)					
5	1705801 *					
6	1705802 *					
7	1705803 *					
8	1705805 *					
9	1705831 *					
10	1001098578 * (3)					
11	1001098579 *					
12	1700584					
13	1702300					
14	1702631					
15	1702928					
16	1703681					
17	1703817					

https://truckmanualshub.com/

Table 3-2. Decal Installation Chart (CE Specification) (See Figure 3-6.)

Item	CE (ENG/(AUS)	CE (DUT)	CE (FRE)	CE (GER)	CE (ITA)	CE (SPA)
18	4420051					
19	1703902 - 20AM 1703903 - 25AM 1703904 - 30AM 1703905 - 36AM 1703906 - 41AM					
20	3252606					
NOTE:	*(1) - 30/36/41AM* *(2) - 20/25AM* *(3) - Installed on 36AM or 41AM machines with tiltback option only.*					

https://truckmanualshub.com/

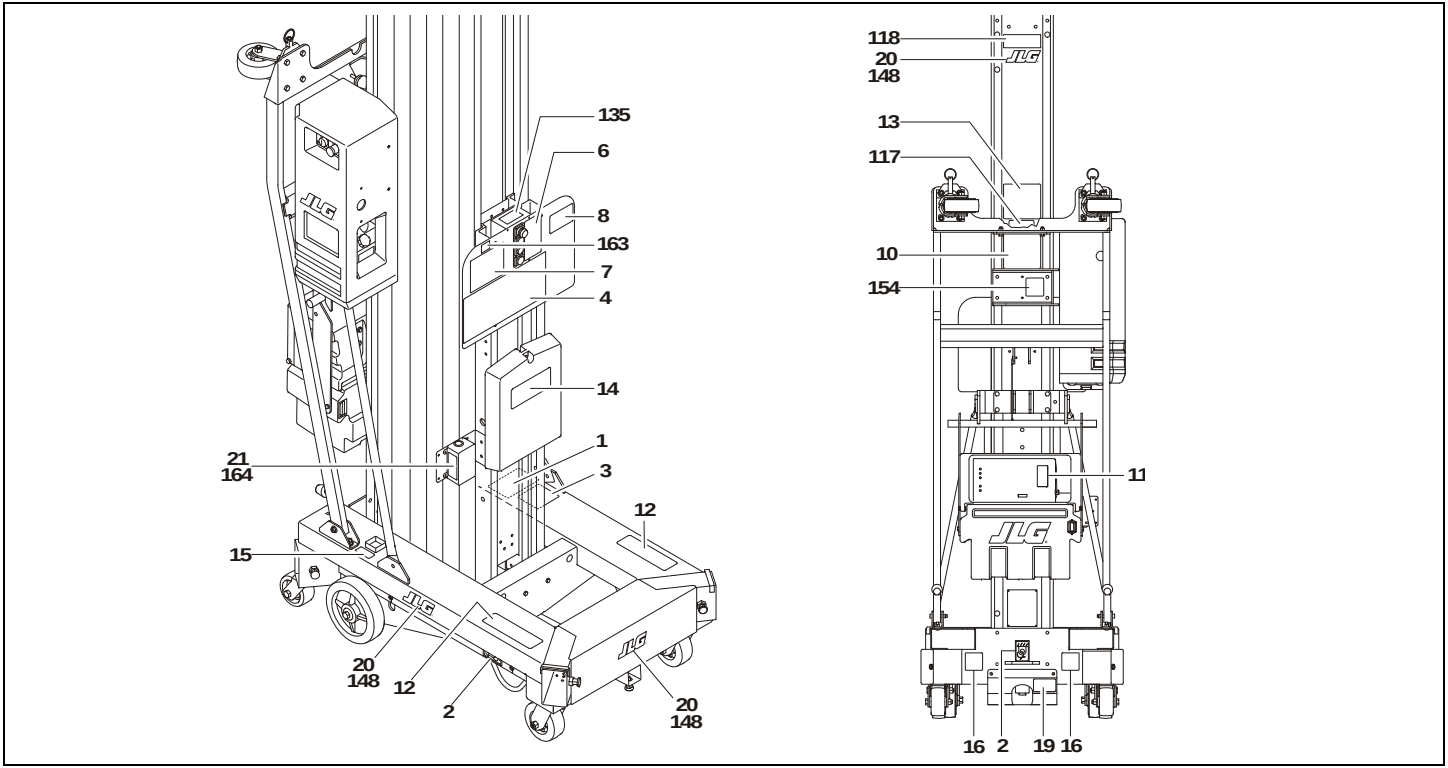

Figure 3-7. Decal Installation. (ANSI/CSA) (Machines S/N-0900031618 to Present)

https://truckmanualshub.com/

Table 3-3. Decal Installation Chart (ANSI and CSA) (See Figure 3-7.)

Item	ANSI	ANSI (LAT)	ANSI (BRZ)	ANSI (JPN)	ANSI (CHI - SIMP)	ANSI (CHI - TRAD)	CSA (FRE)
1	1700584						
2	1702300						
3	Bar Code - Not Available						
4	1703778	1704027	1704019	1704084	1704075	1706692	1703778
5	1703779	—	—	—	—	—	—
6	1703780	1704028	1704020	1704085	1704076	1706693	1703780
7	1703781	1704029	1704021	1704086	1704077	1706694	1703781
8 (1)	1706346	1707101	1707103	1707105	1707107		1706366
8 (2)	1706344	1707100	1707102	1707104	1707106		1706344
9	Not Used						
10	1703784	1704030	1704022	1704088	1704078	1706696	1703784
11	1703785	1704031	1704023	1704089	1704079	1706697	1703785
12	1703786	1704032	1704024	1704090	1704081		1703786
13 (3)	1703787	1704033	1704025	1704091	1704082	1706695	1703787
14	1701509						
15	1703789	1704034	1704026	1704092	1704083	1706699	1703789
16	1703817						
17	Not Used						

https://truckmanualshub.com/

Table 3-3. Decal Installation Chart (ANSI and CSA) (See Figure 3-7.)

Item	ANSI	ANSI (LAT)	ANSI (BRZ)	ANSI (JPN)	ANSI (CHI - SIMP)	ANSI (CHI - TRAD)	CSA (FRE)
18	Not Used						
19	1001115864						
20	1703681						
21	Not Used						1703464
101 to 115	Not Used						
116	Serial Number Plate - Not Available						
117	Not Used						1706351
118	Model Designation - 20AM-1703902 / 25AM-1703903 / 30AM-1703904 / 36AM-1703905 / 41AM-1703906						
119 to 134	Not Used						
135	1703994						
136 to 147	Not Used						
148	1703681 - JLG Logo						
149 to 153	Not Used						
154	1001110242 - JLG Service						
155 to 162	Not Used						
163	Max. Outrigger Load Options: 20AM-1706445 / 25AM-1706446 / 30AM-1706447 / 36AM-1706448 / 41AM-1706449						
164	Voltage Options: 3252761-120V AC / 3252760-220V-240V AC						

NOTE: *(1) - 20AM/25AM Only*
(2) - 30AM/36AM/41AM Only
(3) - Installed on 36AM or 41AM machines with tiltback option only.

https://truckmanualshub.com/

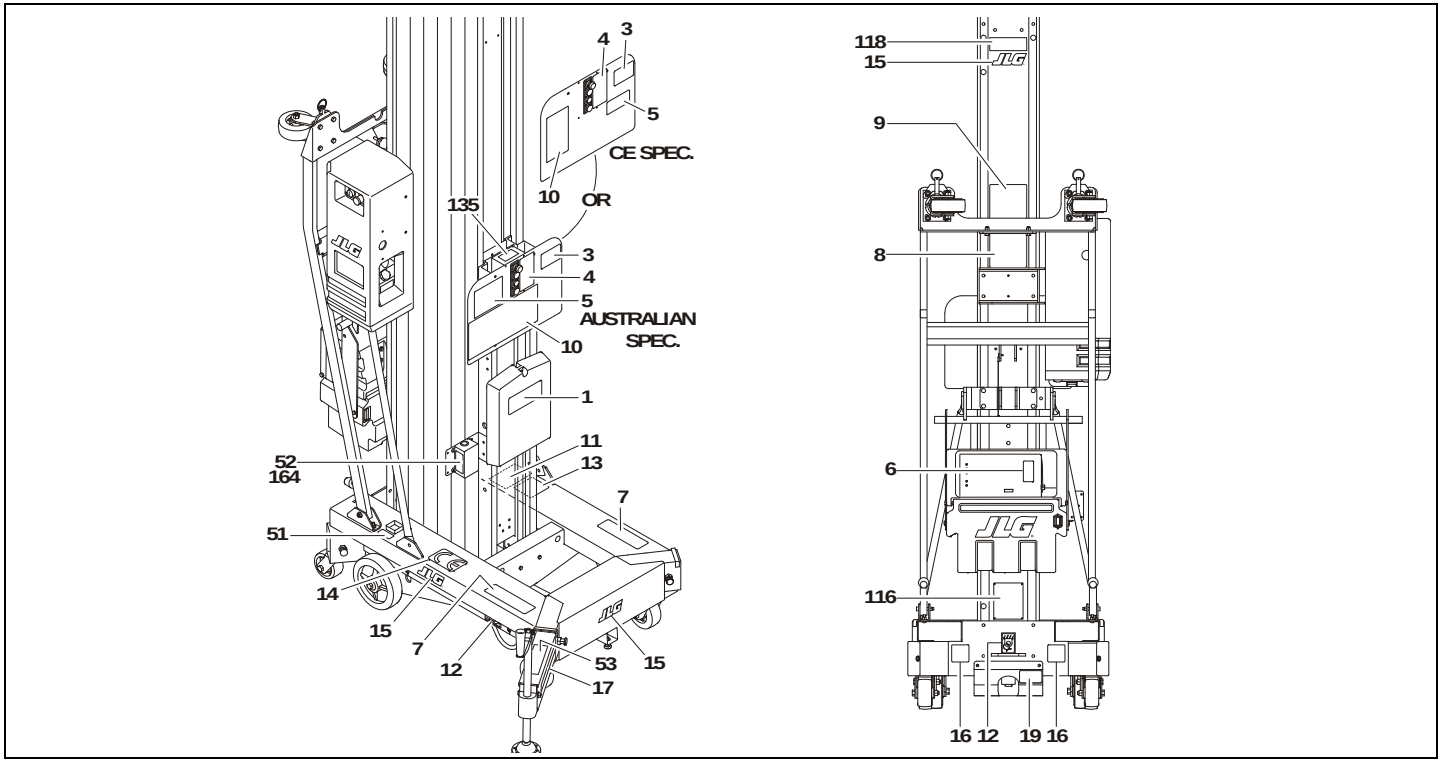

Figure 3-8. Decal Installation (CE) (Machines S/N-0900031618 to Present)

https://truckmanualshub.com/

Table 3-4. Decal Installation Chart (CE Specification) (See Figure 3-8.)

Item	CE (ENG)	CE (DUT)	CE (FRE)	CE (GER)	CE (ITA)	CE (SPA)	CE (AUS)
1	1701509						
2	Not Used						
3	1704094 (1) / 1704095 (2)						
4	1705801						1703780
5	1702802						1703781
6	1705803						1703785
7	1705805						1703786
8	1705831						1703784
9	1001098578						1703787
10	1001098579						1703778
11	1700584						
12	1702300						
13	Not Available - BarCode						
14	1702928						—
15	1703681						
16	1703817						
17	4410051						—

https://truckmanualshub.com/

Table 3-4. Decal Installation Chart (CE Specification) (See Figure 3-8.)

Item	CE (ENG)	CE (DUT)	CE (FRE)	CE (GER)	CE (ITA)	CE (SPA)	CE (AUS)
18	Not Used						
19	1001115864						
20 to 50	Not Used						
51	Not Used						1703789
52	Not Used						1703464
53	Not Used						1705796
101 to 115	Not Used						
116	Serial Number Plate - Not Available						
117	Not Used						
118	Model Designation Options: 20AM-1703902 / 25AM-1703903 / 30AM-1703904 / 36AM-1703905 / 41AM-1703906						
119 to 134	Not Used						
135	1703994 (Optional)						
136 to 163	Not Used						
164	120V - AC - 3255761 / 220V-240V AC - 3255760						

NOTE: *(1) - 30/36/41AM*
(2) - 20/25AM
(3) - Installed on 36AM or 41AM machines with tiltback option only.

https://truckmanualshub.com/

SECTION 4. MACHINE OPERATION

4.1 DESCRIPTION

This machine is a manually propelled machine, with a work platform mounted to an elevating aluminum mast mechanism. The personnel lift's intended purpose is to provide personnel *(with their tools and supplies)* access to areas above ground level.

The primary operator control station is in the platform. From this control station, the operator can raise and lower the platform. A ground control station is provided to lower the platform to the ground in an emergency if the operator in the platform is unable to do so, or if a power failure should occur.

Vibrations emitted by these machines are not hazardous to an operator in the work platform. The equivalent continuous A-Weighted sound pressure level at the work platform is less than 70dB(A).

4.2 OPERATING CHARACTERISTICS AND LIMITATIONS

Capacities

The platform can be raised above the stowed position if:

- The machine is positioned on a smooth, firm surface on which the machine is capable of being leveled.
- Load is within manufacturer's rated capacity.
- All machine systems are functioning properly.
- The machine is leveled and outriggers are properly installed as indicated by the outrigger interlock LED lights on the base frame.

https://truckmanualshub.com/

4.3 BATTERY CHARGING & MAINTENANCE - *(DC MODELS ONLY)*

AM-DC Models are equipped with a 12 volt, 10 amp output - dual voltage *(120/240V)* input battery charger. The charger is microprocessor controlled featuring an automatic charge sensing circuit which can determine cell voltage and regulate charger output and terminate charging as required.

NOTICE

MACHINES BUILT STARTING WITH S/N-0900031618 AND LATER WERE EQUIPPED WITH A NEW COMPACT DESIGN HOUSING FOR THE CHARGER AND BATTERY. THE CHARGER AND BATTERY OPERATION ARE UNCHANGED.

Battery Maintenance and Safety

BATTERY ACID IS HIGHLY CORROSIVE. AVOID CONTACT WITH SKIN AND CLOTHING AT ALL TIMES.

BATTERY ACID RELEASES AN EXPLOSIVE GAS WHILE CHARGING, ALLOW NO OPEN FLAMES, SPARKS OR LIGHTED TOBACCO PRODUCTS IN THE AREA WHILE CHARGING BATTERIES. CHARGE BATTERIES ONLY IN A WELL VENTILATED AREA.

ADD ONLY DISTILLED WATER TO BATTERIES. WHEN ADDING DISTILLED WATER TO THE BATTERIES, A NON-METALLIC CONTAINER AND/OR FUNNEL MUST BE USED.

The battery fluid level should be approximately 1/8" (3mm) below vent tubes. *(See Figure 4-1.)*

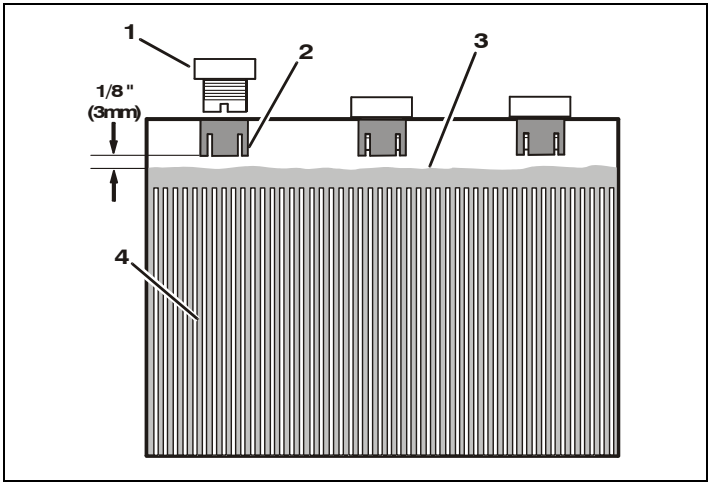

Figure 4-1. Battery Fluid Level.

1. Battery Filler Cap
2. Vent Tube
3. Fluid Level
4. Cell Plates

https://truckmanualshub.com/

Battery Charger Operation

NOTICE

ALWAYS CHECK THE VOLTAGE SELECT SWITCH ON THE FACE OF THE BATTERY CHARGER BEFORE OPERATION. IF NOT SET TO THE PROPER AC POWER INPUT VOLTAGE, THE CHARGER MAY BE DAMAGED.

1. Turn the ground control key switch to the OFF position.
2. Set the AC voltage switch on the face of the charger for the local AC line voltage.
3. Plug the battery charger AC power cable, stowed inside the battery/charger carrier *(beside charger)* into a properly grounded receptacle. Use a suitable extension cord, if necessary.
4. The charger runs through a self-diagnostic check. The LED's on the face of the charger flash in the following sequence;
   a. First all five (5) LED's flash three (3) times.
   b. Next each LED lights in sequence.
   c. Finally all five (5) LED's flash three (3) times again.
5. When ready to charge, the CHARGER ON LED and the INCOMPLETE CHARGE (25%) LED on the front panel of the charger will light up, the charger will then begin to charge the batteries.

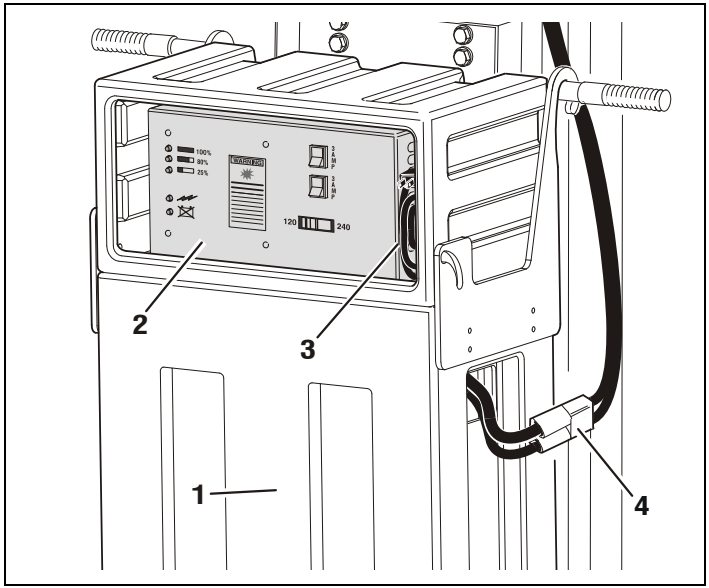

Figure 4-2. Battery Box and Charger Assembly.
(D.C. Model Only)

1. Battery Box/Charger Assembly
2. DC Battery Charger
3. Charger AC Power Cord
4. DC - Battery to Machine Main Power Connector

https://truckmanualshub.com/

6. When the battery cell voltage reaches 2.37 V/cell the 80% CHARGE LED will light up. The charger then continues to monitor the increase in charge until it sees no increase, and then terminates the charging process.
7. The CHARGE COMPLETE (100%) LED will light when the batteries are fully charged.
8. Unplug the charger AC power cord and stow the cord.

Abnormal Cycle Indicator LED

The ABNORMAL CYCLE indicator LED will light when;

- The AC input to the charger was interrupted.
- There is a dead cell or cells in the battery.
- One or more of the battery connectors are loose or corroded.

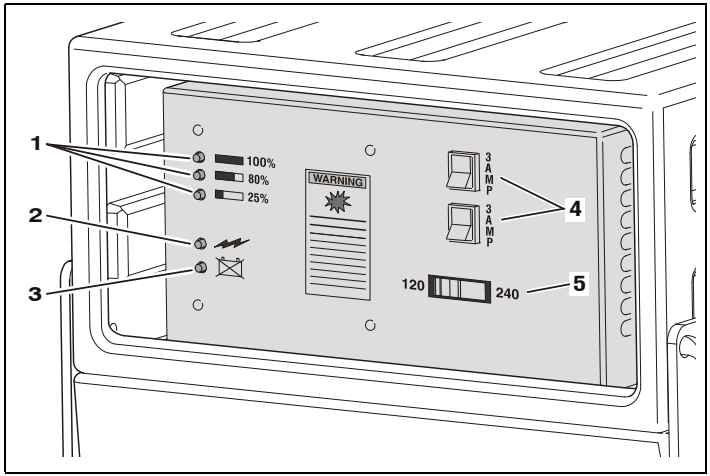

Figure 4-3. Dual Voltage Charger - Front Panel.

1. % of Charge in Progress LED's (Green)
2. Charger On LED (Green)
3. Abnormal Cycle LED (Yellow)
4. Circuit AC Circuit Breakers
5. AC Voltage Selection Switch

https://truckmanualshub.com/

4.4 MACHINE SET-UP AND OPERATION

To set-up machine for operation the operator must:

1. Position machine in work area.

NOTE: *If AC powered machine, connect machine to a grounded AC receptacle with a heavy duty extension cord equipped with an equipment grounding conductor.*
If DC powered machine, check battery box assembly is installed, battery is charged and connected to machine's DC receptacle.

2. Set key switch to ON position at ground control station.
3. Check both emergency stop switches are in RESET position for operation.
4. Check manual decent control valve (red knob) is closed.

⚠ WARNING

APPLY FRONT CASTER BRAKES SO MACHINE DOES NOT ROLL IN ANY DIRECTION. DO NOT INSTALL OUTRIGGERS OR ELEVATE PLATFORM UNTIL FRONT CASTER BRAKES ARE LOCKED.

5. Apply caster brakes.
6. Install outriggers.

Caster Brake Operation

1. Press down on caster brake lever on both casters at front of machine to apply caster brakes.
2. To disengage caster brake, apply pressure or lift up on caster brake lever.

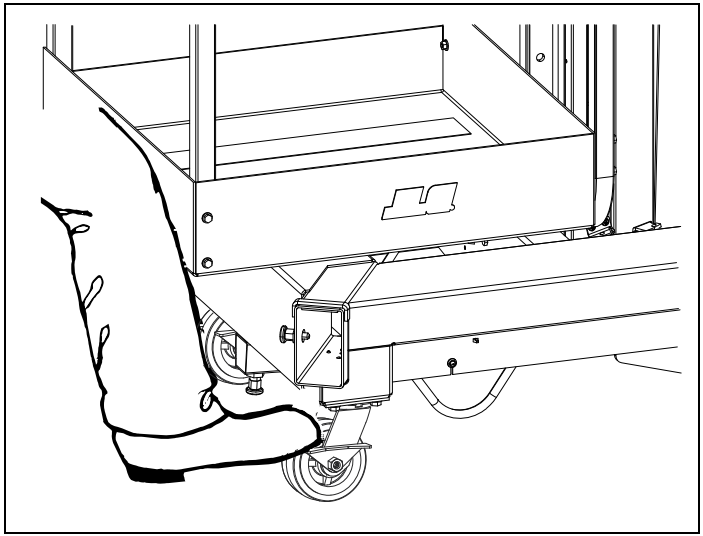

Figure 4-4. Setting & Releasing Caster Brake

https://truckmanualshub.com/

Outrigger Installation

(See Figure 4-5. on page 4-7)

NOTICE

AS A SAFETY PRECAUTION, DUE TO DIFFERENT LENGTHS, OUTRIGGER BEAMS ARE DESIGNED TO FIT A SPECIFIC MODEL AND ARE NOT INTERCHANGEABLE.

1. Remove one outrigger beam from the stowage socket.
2. Insert outrigger beam into an outrigger socket on the base frame with outrigger interlock contact on the bottom. Push outrigger beam in socket until locking pin on side of outrigger socket snaps into the outrigger beam detent. Repeat for remaining outriggers.
3. With all outriggers inserted, turn each outrigger jack down, lifting entire machine until all wheels are off the ground.
4. When all four (4) wheels are off the ground, use the bubble level on the base frame to level machine.

NOTICE

MACHINE WILL OPERATE ONLY IF ALL FOUR (4) INTERLOCK LED LIGHTS ARE ILLUMINATED.

https://truckmanualshub.com/

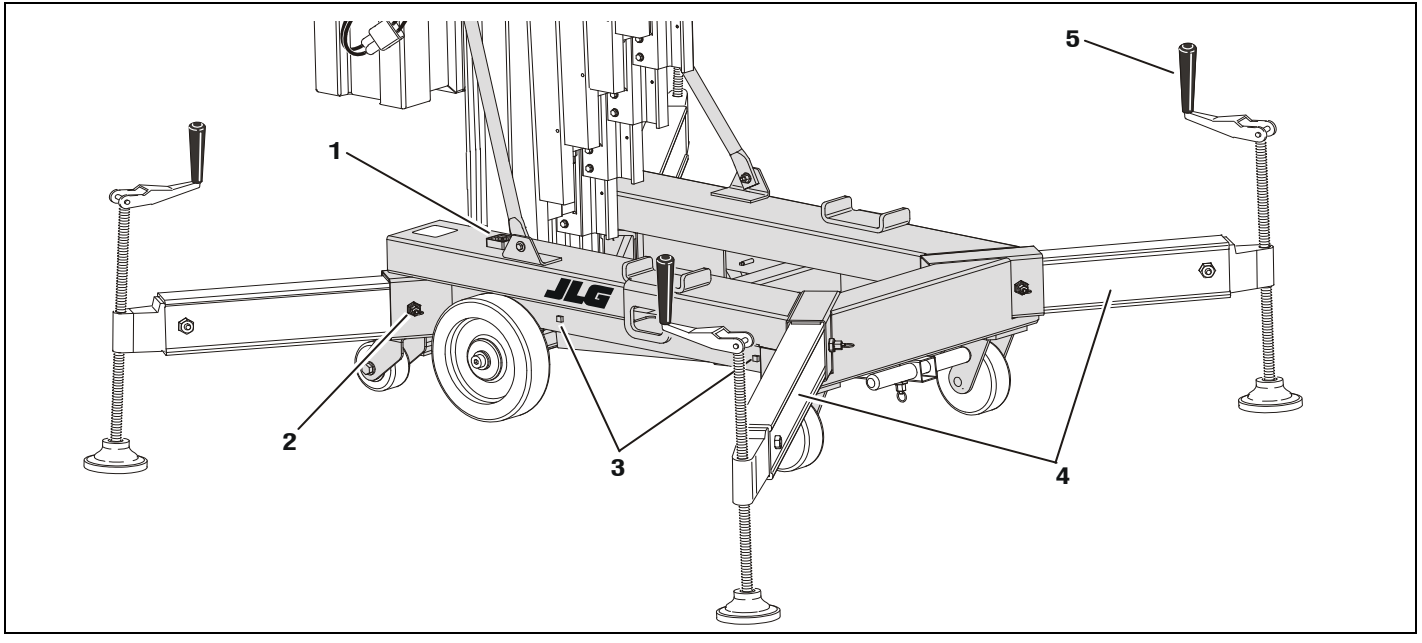

Figure 4-5. Outrigger Installation.

1. Bubble Level Indicator
2. Outrigger Lock/Release Pin
3. Interlock LED's
4. Outrigger Beam Assembly
5. Leveling Jack

https://truckmanualshub.com/

Platform Loading

platform maximum rated load capacity is shown on a placard located on the platform control panel. Applies to all available AM model platforms.

Maximum capacity for each model is as follows:

Table 4-1. Maximum Platform Capacity.

MODEL	PLATFORM CAPACITY FOR MACHINES BUILT TO SPECIFICATION		
	ANSI & C.S.A. - B354.1-04	CE	C.S.A. - B354.1-M82
20AM - DC/AC	350 lb. (160 kg)	350 lb. (160 kg)	300 lb. (135 kg)
25AM - DC/AC	350 lb. (160 kg)	350 lb. (160 kg)	300 lb. (135 kg)
30AM - DC/AC	350 lb. (160 kg)	300 lb. (135 kg)	300 lb. (135 kg)
36AM - DC/AC	300 lb. (135 kg)	300 lb. (135 kg)	250 lb. (113 kg)
41AM - DC/AC	300 lb. (135 kg)	300 lb. (135 kg)	250 lb. (113 kg)

Platform Operation

1. Enter platform and close gate/slide bar.
2. To raise platform, press FUNCTION ENABLE button and platform UP button simultaneously. Upon reaching desired elevation level, release UP and FUNCTION ENABLE buttons.

⚠ WARNING

CHECK AREA BENEATH PLATFORM IS FREE OF PERSONNEL AND OBSTRUCTIONS PRIOR TO LOWERING PLATFORM.

3. To lower platform, press FUNCTION ENABLE button and platform DOWN button on control panel simultaneously.

https://truckmanualshub.com/

4.5 QUICK-CHANGE PLATFORM MOUNTS

(See Figure 4-6.)

The AM model is equipped with platform mounting for quick and simple exchange of platforms.

Platform Removal

1. Remove both pins holding lower platform support rail to platform lower mount.
2. Remove both pins holding upper platform support rail to platform upper mount.
3. Using suitable lifting equipment or another person, swing lower platform support rail forward, away from mast to clear platform lower mount, then lift upper platform support rail up and out of platform upper mount.

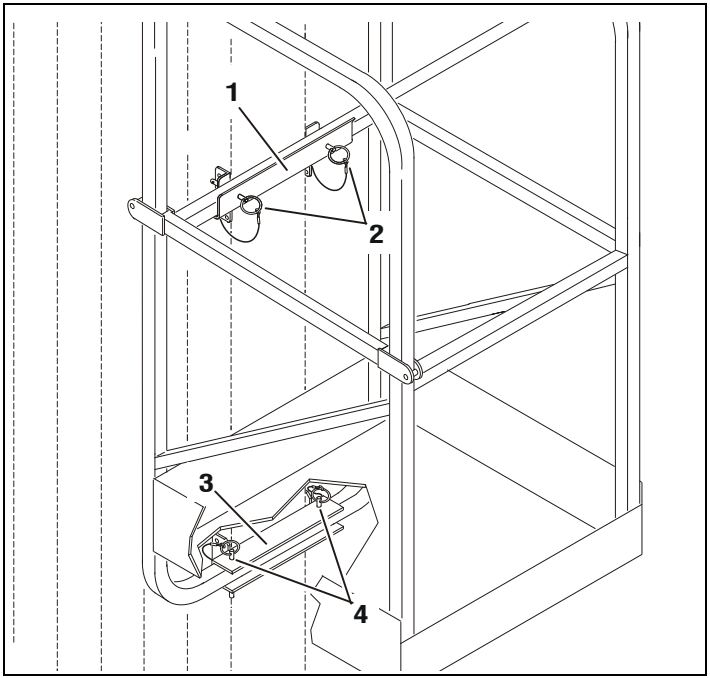

Figure 4-6. Quick Change Platform Mount.

1. Platform Upper Mount
2. Upper Mount Attach Pins
3. Platform Lower Mount
4. Lower Mount Attach Pins

https://truckmanualshub.com/

Platform Installation

1. Using two people or suitable lifting equipment, lift platform and set platform upper support rail into the upper platform mount on the mast.
2. Swing platform lower support rail into lower platform mount on the mast.
3. Secure platform support rails with two (2) platform upper mount pins, and two (2) lower platform mount pins.

4.6 MACHINE SHUT DOWN AND PARK

1. Ensure platform is fully lowered, turn key switch to OFF position.
2. Store outrigger beams in stowage sockets.
3. Move machine to a well-protected and well-ventilated area. In a hostile environment, cover machine for protection.
4. Apply caster brakes and chock at least two wheels when parking machine for extended time.
5. Remove key switch to disable machine from unauthorized use.

https://truckmanualshub.com/

4.7 TRANSPORT, LIFTING AND TIE DOWN

General

To move machine from work area to work area the operator may:

- Push machine on its base wheels.
- Push machine in Tilt-Back mode. *(36AM and 41AM only)*
- Move machine using a forklift.
- Load machine on back of a pickup truck, using the built-in load bar.

NOTE: *36AM and 41AM machines are equipped with a permanently attached tilt-back assembly to allow machine to fit through standard size doorways.*

Transporting by Pushing

The standard machine's base frame is equipped with load bearing wheels mounted on a straight axle at the mast end of the machine; and a pair of heavy duty swivel caster wheels mounted on the frame at the platform end of the machine.

⚠ CAUTION

REFER TO SECTION 1.2, TRANSPORTING SAFETY PRECAUTIONS BEFORE TRANSPORTING MACHINE.

Tilt-Back Assembly Set-up *(AM36/AM41) - Machines Prior to S/N - 0900031618*

(See Figure 4-7.)

NOTICE

PLATFORM MUST BE FULLY LOWERED, AND OUTRIGGER BEAMS MUST BE STOWED. ON DC MODELS ENSURE BATTERY BOX/CHARGER ASSEMBLY IS NOT OBSTRUCTED AND IS CLEAR TO SWING ONCE MACHINE IS TILTED.

1. Move machine to an area that is level, clear and free of obstacles.
2. Hold the tilt-back assembly in place and remove the release pins from the mast support crossbar.
3. Carefully lower the tilt-back assembly as far as it will go.
4. Pull either of the gas spring cylinders up out of their retaining clip. Guide the groove pins on the end of the cylinder into the slot on the end of the mast crossbar. Secure both cylinders to the mast support crossbar by replacing the pins removed in step 2 to lower the tilt-back assembly.
5. Extend and lock the T-handle bar located under the front of the machine. A release/lock pin is located on the bottom of the bar.
6. With both hands on the grips of the T-handle lifting bar, carefully tilt the machine back onto the tilt-back assembly.

https://truckmanualshub.com/

1

2

Figure 4-7. Tilt-Back Assembly Set-Up.

https://truckmanualshub.com/

3

4

Figure 4-7. Tilt-Back Assembly Set-Up.

https://truckmanualshub.com/

5

6

Figure 4-7. Tilt-Back Assembly Set-Up.

https://truckmanualshub.com/

Tilt-Back Assembly Set-up (AM36/AM41) - Machines S/N - 0900031618 to Present

(See Figure 4-8., Figure 4-9. and Figure 4-10.)

NOTICE

PLATFORM MUST BE FULLY LOWERED, AND OUTRIGGER BEAMS MUST BE STOWED. ON DC MODELS ENSURE BATTERY BOX/CHARGER ASSEMBLY IS NOT OBSTRUCTED AND IS CLEAR TO SWING ONCE MACHINE IS TILTED.

⚠ CAUTION

REFER TO SECTION 1.2, TRANSPORTING SAFETY PRECAUTIONS BEFORE TRANSPORTING MACHINE.

1. Move machine to an area that is level, clear and free of obstacles.
2. (Step 1) Hold the tilt-back assembly in place and remove the release pin securing the tilt-back assembly to the gas spring cylinder.
3. Lower the tilt-back assembly as far as it will go onto it's rubber bumpers.
4. (Step 2) Pull the gas spring cylinder out of it's retaining clip on the back of the mast assembly. Lower and extend or retract the cylinder to guide the groove pins on the end of the cylinder into the slots on the tilt-back crossbar assembly bracket. Secure the cylinder to the tilt-back crossbar bracket by replacing the pin removed in step 1 to lower the tilt-back assembly.

NOTE: *If moving machine in other than a straight line forward, unlock tilt-back swivel wheels by pulling the swivel wheel lock pins out then turning pins 90° to the unlock position. This will allow the tilt-back swivel wheels to rotate freely and steer machine while moving.*

5. (Step 3) Fully extend the T-handle lifting bar located under the front of the machine by pulling down on the release/lock pin located under the bar. Fully extend the lifting bar until the release/lock pin snaps back in, locking the bar in place. Push or pull bar to be certain it is secure before lifting machine.
6. (Step 4) With both hands on the grips of the T-handle lifting bar, carefully lift the front of the machine and tilt the machine back onto the tilt-back assembly and the gas spring cylinder.
7. Push machine around using the loop grips just behind the front swivel wheel assemblies under the base frame.

https://truckmanualshub.com/

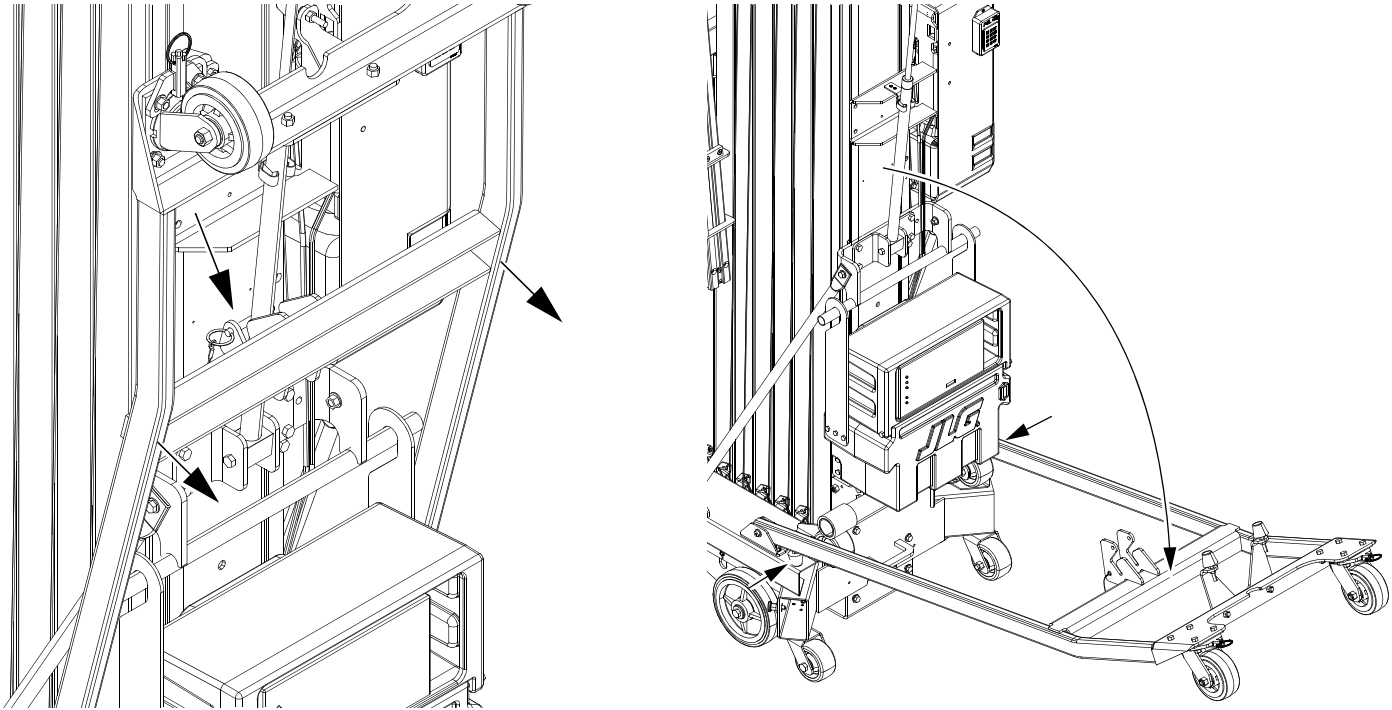

Step 1

Figure 4-8. Tilt-Back Assembly Set-Up - Machines S/N - 0900031618 to Present.

https://truckmanualshub.com/

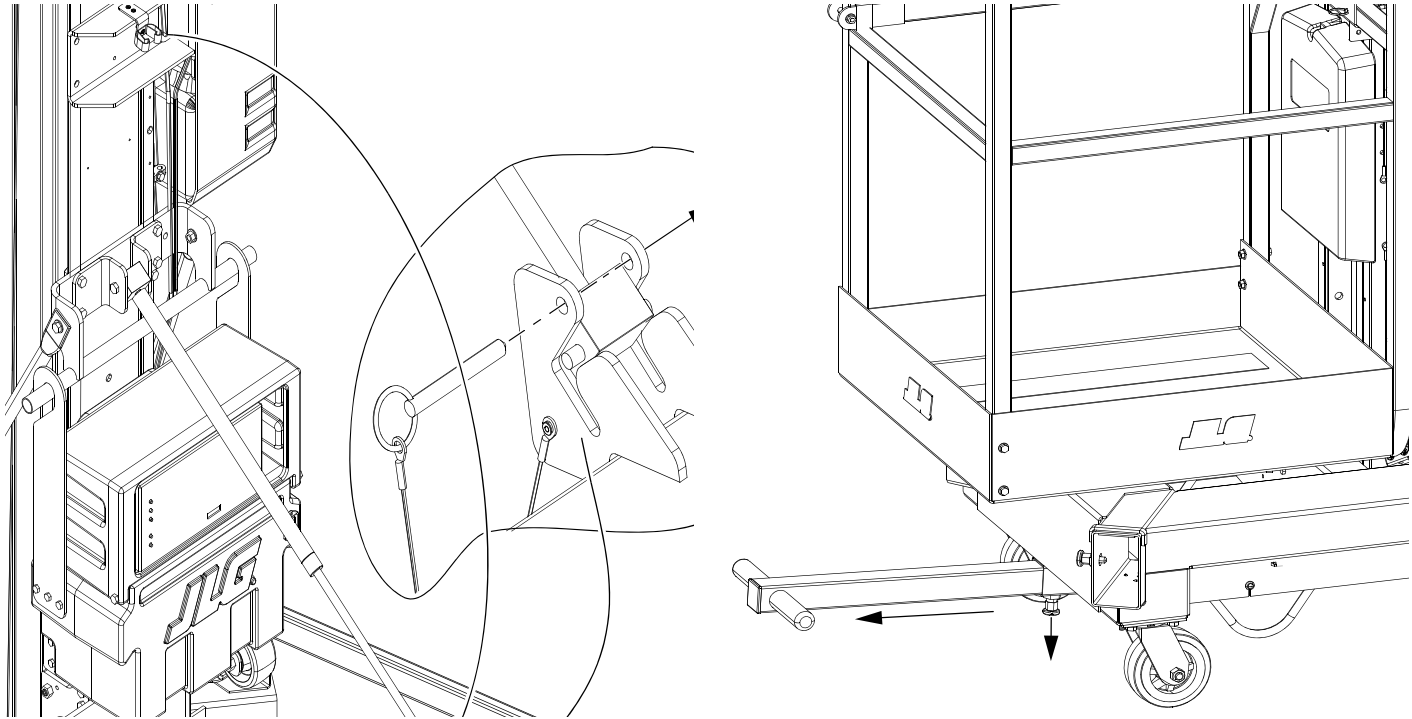

Step 2

Step 3

Figure 4-9. Tilt-Back Assembly Set-Up - Machines S/N - 0900031618 to Present.

https://truckmanualshub.com/

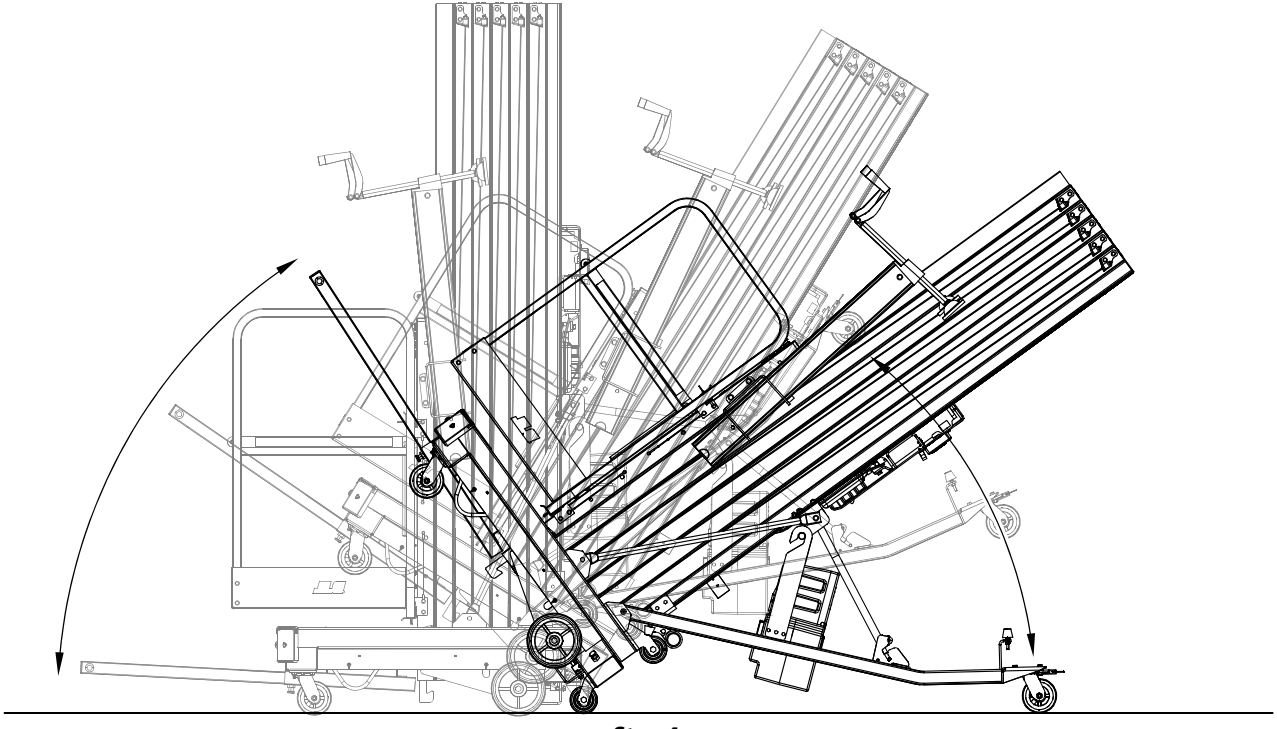

Step 4

Figure 4-10. Tilt-Back Assembly Set-Up - Machines S/N - 0900031618 to Present.

https://truckmanualshub.com/

Pickup Truck Loading Device (Option)

(See Figure 4-11.)

NOTE: *The stowed mast height of the 36AM and 41AM exceeds the length of most pick-up truck beds. JLG does not recommend transporting those models by pick-up truck.*

AM model machines can be transported in a standard full size pickup truck. If the machine is equipped with the loading device option, it can be loaded and unloaded by one person.

NOTE: *For a smooth rolling surface and even weight distribution, it is recommended that 3/4" to 1" (2 to 2.5cm) thick plywood be placed in the truck bed and out onto the tailgate. This should avoid tailgate damage.*

Park truck on a firm, smooth, level surface with the tailgate open. Remove the battery/charger storage box from DC model machines.

1. Set load pivot bar on back of mast so bar is set approximately 1 - 2 in (3 to 5 cm) above tailgate height. Use the spring loaded locking pin to raise or lower the load pivot bar. Once bar is locked in place, push machine against the tailgate.
2. At front of the machine, extend the T-handle lifting bar from the base frame.
3. Begin lifting the machine onto the tailgate of the truck with the T-handle lifting bar. As machine begins to pivot be certain the load pivot bar is engaging the truck tailgate.
4. Continue lifting and pushing machine onto the truck bed, firmly grasp the machine by the base frame pushing it all the way into truck bed.
5. Secure machine to the truck bed with rope or tie down hooks to limit any machine movement while transporting.

To unload machine from truck bed, reverse loading instructions above.

https://truckmanualshub.com/

1

2

Figure 4-11. Loading Machine onto Bed of Pick-Up Truck.

https://truckmanualshub.com/

3

4

Figure 4-11. Loading Machine onto Bed of Pick-Up Truck.

https://truckmanualshub.com/

5

Figure 4-11. Loading Machine onto Bed of Pick-Up Truck.

https://truckmanualshub.com/

Lifting

To lift the machine, use suitable lifting equipment capable of handling the weight of the machine.

NOTE: *Fork lifts, cranes, chains, slings, etc. must be capable of handling the following weights:*

Table 4-2. AM Machine Gross Weights

AM Model	Gross Weight
20AM-AC	717 lb. (325kg)
20AM-DC	785 lb. (356kg)
25AM-AC	800 lb. (363kg)
25AM-DC	871 lb. (395kg)
30AM-AC	871 lb. (395kg)
30AM-DC	941 lb. (427kg)
36AM-AC	973 lb. (441kg)
36AM-DC	1043 lb. (473kg)
41AM-AC	1072 lb. (486kg)
41AM-DC	1142 lb. (518kg)

NOTE: *All AM models are equipped with forklift pockets at the mast end of frame for transporting the unit. An optional crane hook is available. Do not lift with a crane without the optional crane hook.*

Machine Tie Down

Secure the machine to the transport vehicle using the tie down lug weldments provided on the rear and sides of the machine.

1. Transport only with platform in the stowed position.
2. Remove all loose items from machine.

https://truckmanualshub.com/

NOTES:

https://truckmanualshub.com/

SECTION 5. OPTIONAL EQUIPMENT

5.1 OPTIONAL EQUIPMENT

The following optional equipment is available for AM model machines:

22" x 25" Quick-Change Platform

The 22" (56cm) long by 25" (64cm) wide platform features a gull wing gate opening.

26" x 26" Quick-Change Platform

The 26" (66cm) long by 26" (66cm) wide platform features a side entry gate opening.

28" x 26" Quick-Change Platform

The 28" (71cm) long by 26" (66cm) wide platform features a gull wing gate opening.

25" x 26" Step-in Molded Platform w/Swing-up Gate

The 25" (64cm) long by 26" (66cm) wide Step-in Molded Platform features a tough molded shell base and sides mounted to a welded steel frame.

Tool Tray

Platform attachment to hold hand tools or other small items placed in the tray.

Fluorescent Tube Caddy

Platform attachment for handling fluorescent tubes.

Crane Hook

Attached at the top rear of the mast, the crane hook is used to lift the machine up or down to another level.

Straddle Extension *(Requires Straddle Adapter)*

(See Section 5.2 for Installation and Use instructions)

The AM-SE Straddle Extension allows a user to lift the machine and move it over obstacles up to 4 ft. (1.2m) in height.

Ladder for Straddle Extension

This ladder allows the user entry to the AM machine once it is raised using the Straddle Extension.

https://truckmanualshub.com/

Extra Power Pack *(Battery, Charger & Case)*

Includes the battery, charger and molded case.

Platform Auxiliary Power Lowering Device

The Platform Auxiliary Power Lowering device is a switch activated battery backed electrical circuit designed to provide power to the platform control box in the event of loss of the machines power supply.

Laser Positioning Device

Attached to the platform, this device allows the operator to more accurately position the machine under a work area before raising the platform in position.

Hour Meter

(See Figure 5-1., Hour Meter Location. (Option)

The machine hour meter accumulates pump operation time during the platform LIFT UP cycle only. The reading indicates hours and tenths of an hour.

Machine Cycle Counter Meter

The Cycle Counter Meter is located on the front side of the Ground Control Station. This meter tracks the number of cycles the mast travels up and down during macheine operation. This information can be used to determine maintenance intervals and other for other informational purposes when

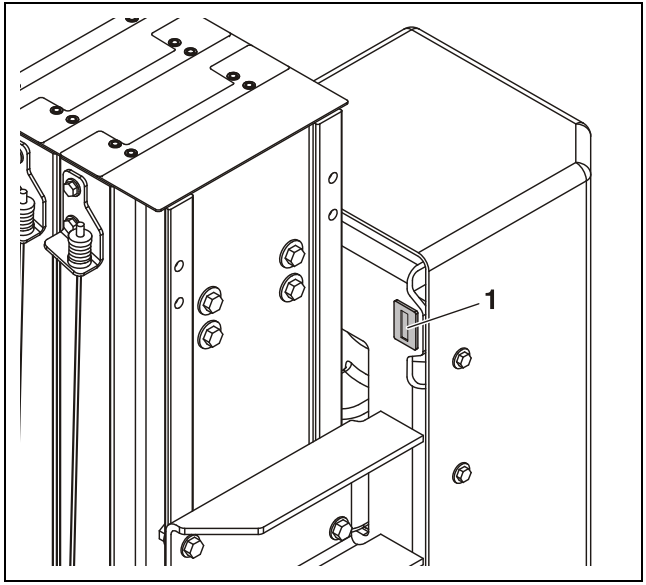

Figure 5-1. Hour Meter Location. (Option)

1. Hour Meter

https://truckmanualshub.com/

5.2 AM-SE - STRADDLE EXTENSION – INSTALLATION

Description

The AM-SE straddle extension increases the versatility of the AM Series by providing a bridge for access to areas where obstacles such as rows of seats, machines, counters or stairwells are encountered.

The straddle extension provides clearance of up to 48 inches (1.2m) in height and is adjustable from 104 to 128 inches (2.6m to 3.3 m) in length.

Straddle Adaptor Wiring Components

The straddle wiring for both the AM Series includes the following parts:

1. Two (2) short wiring harness'.
2. Two (2) Spring Clips.
3. Four (4) #10-24 x .625 long bolts, nuts and lock washers.
4. Two (2) 3/8" I.D.\ 1/2" O.D grommets.

Straddle Adaptor Wiring Installation

1. Set up machine installing outriggers, level machine and raise the platform as high as necessary to allow access base frame.

⚠ WARNING

NEVER WORK UNDER AN ELEVATED PLATFORM UNTIL PLATFORM HAS BEEN SAFELY RESTRAINED FROM ANY MOVEMENT BY JACK STAND OR OVERHEAD SLING.

2. Place a floor jack or other suitable support between the mast and floor before working underneath platform.

NOTICE

ON AC MACHINES UNPLUG THE POWER CORD, DC POWERED MACHINES DISCONNECT THE MAIN POWER SUPPLY CONNECTOR ON THE SIDE OF THE BATTERY STORAGE/CHARGER BOX.

NOTE: *The holes in the base frame for mounting the spring clips and routing the wires through the center crossmember to the interlock relay may already exist. If not continue with Step 3, if holes are there, jump to Step 5.*

3. Drill two (2) .219 diameter (7/32") holes per side for each spring clip see Figure 5-2.

https://truckmanualshub.com/

4. Drill one (1) .50 diameter (1/2") hole, one (1) per side into the center frame crossmember for the wiring grommet **see Figure 5-2.**
5. Install the spring clips to the base frame at location of drilled holes, using two (2) #10-24 x .625 bolts and two (2) nuts and two (2) lock washers per spring clip.
6. Install the grommets supplied into the .50 dia. holes.
7. Locate the two short adapter wiring harnesses and route one through each grommeted hole on the center frame crossmember.
8. Wire the adapter wiring harness ends together and to the interlock relay wires **as shown in Figure 5-3.**
9. Press the two (2) - three (3) prong connector ends into the spring clips mounted on the base frame.
10. Reconnect power to the machine and lower the platform to the stowed position. Stow the outriggers.
11. To verify installation, set-up and assemble straddle extension as described in the Section 5-3. If outrigger interlock LED's on the straddle extension light up when completely assembled, and power is supplied to the platform, then installation is complete.

https://truckmanualshub.com/

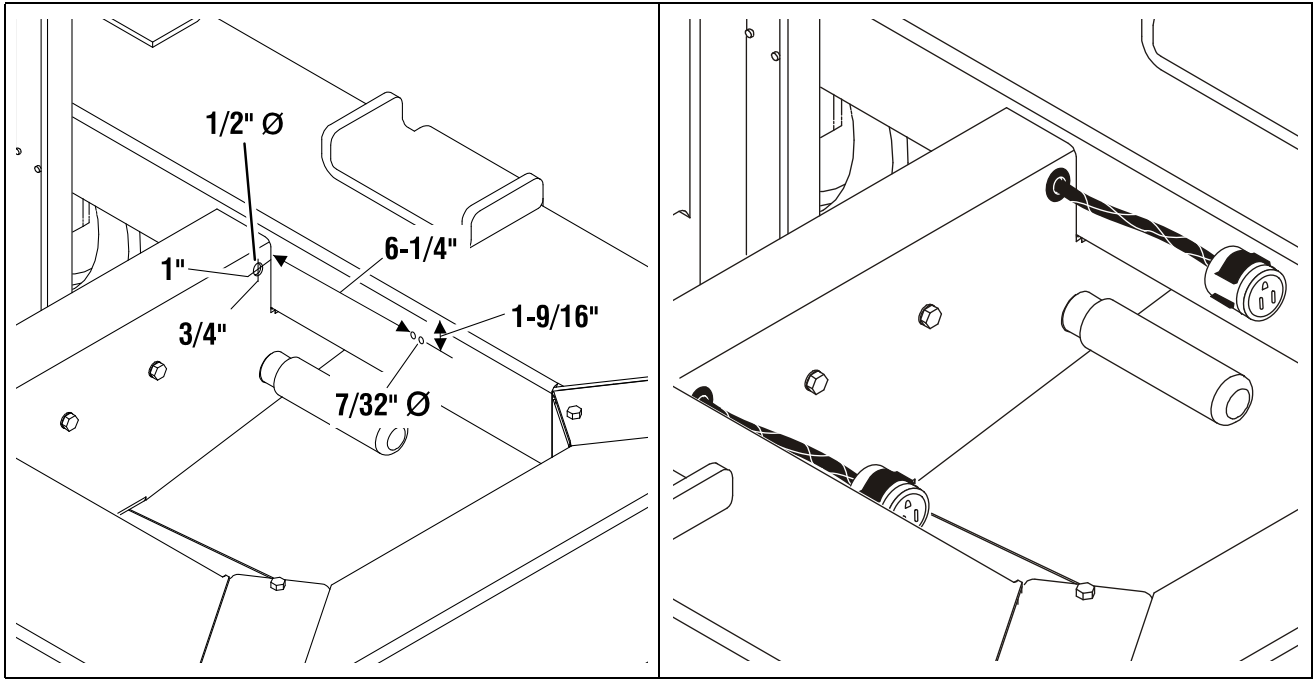

Figure 5-2. SE-Adapter - Wiring - Grommet & Spring Clip Mounting Hole Locations. (Same For Both Sides)

https://truckmanualshub.com/

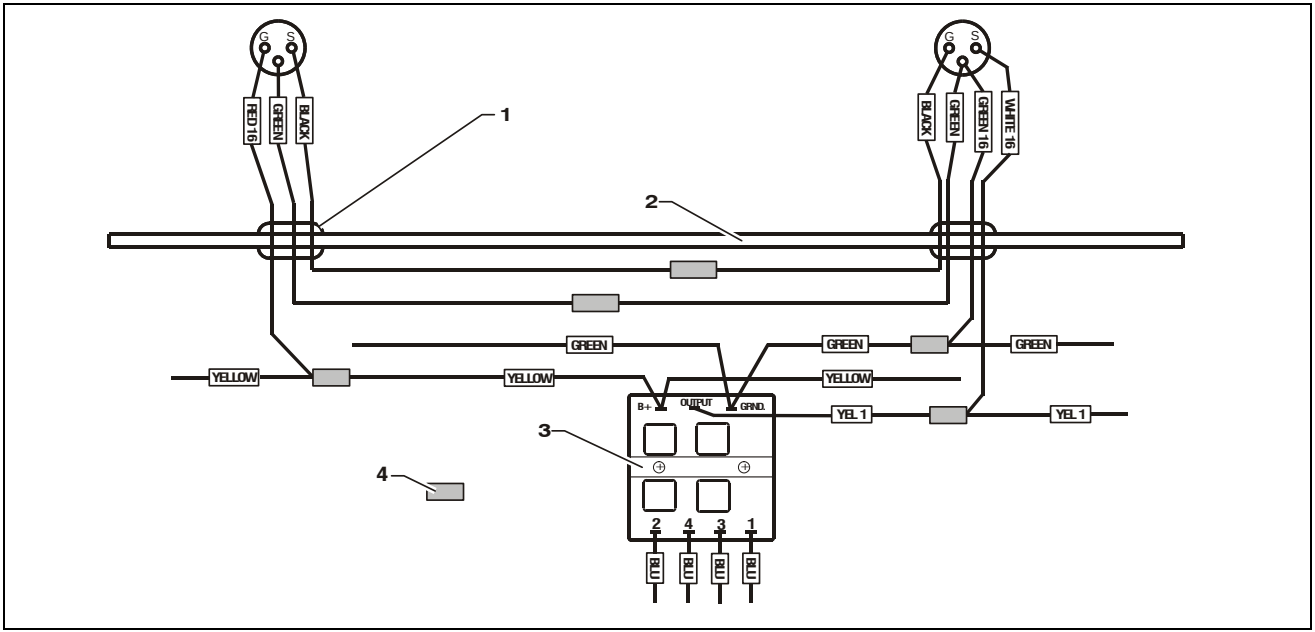

Figure 5-3. Straddle Adapter Wiring Harness to AM Wiring Connections.

1. Grommet
2. Crossmember
3. Potted Relay
4. Butt Splice

NOTE: *Cut (1) Green, (1) Yellow, and (1) Yellow 1 wire and install the Adapter Harness with butt splice terminals.*

https://truckmanualshub.com/

5.3 AM-SE - STRADDLE EXTENSION – SET-UP AND OPERATION

Straddle Extension - Components

The AM-SE Straddle Extension can be set up by one person without tools. The AM-SE consists of eight (8) structural components.

1. Two (2) extendable side lifting rails.
2. Two (2) end straddle supports on locking swivel caster wheels, each with lifting winch and winch cables, outrigger interlock - retractable cable reel and quick-release safety pins.
3. Four (4) short outrigger beams which interconnect the straddle extension side lifting rails with the AM base outrigger sockets.

Mounting - Straddle Extension to AM

(See Figure 5-4.)

1. Near work area find a suitable area large enough to assemble the AM machine to the Straddle Extension.
2. Insert one (1) of the short outrigger beams into an outrigger socket in the AM base. Push it in until the locking pin secures the beam in place.
3. Next, slide a side lifting rail onto the short outrigger beam.
4. Align the side lifting rail with the other AM outrigger socket on this side of the machine and install another short outrigger beam. **Push the short beam in until the locking pin in the AM base secures the beam in place.**
5. Mount the remaining side lifting rail to the other side of the AM machine repeating steps 2, 3 and 4.
6. Mount a straddle end support by aligning the two vertical rails of the end support with the adjust bracket opening on ends of the side lifting rails.

NOTE: *For added stability of the end support, lock the castor wheels on the bottom of the support so they are parallel with the outrigger sockets.*

7. Insert end support vertical rails into the adjust brackets *(in against the slide pads)*, and insert an adjust bracket end cap *(with slide pad against vertical rail)* into the slot on the adjust brackets on both side rails.
8. Secure end caps with the quick-release pin wired to the end cap.
9. Repeat steps 6, 7 and 8 to mount the other straddle end support.
10. Attach the winch lift cable clevis ends to the lifting lugs, using the quick-release pins attached to winch cables.

https://truckmanualshub.com/

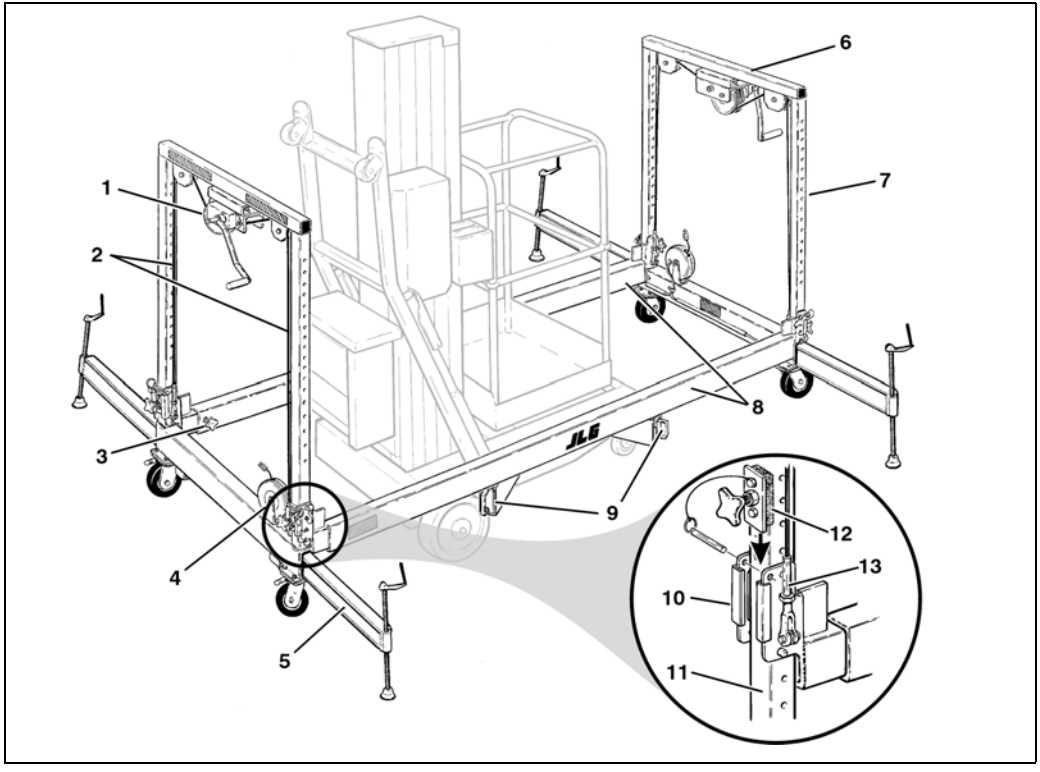

1. Winch Assembly
2. Winch Lift Cables
3. Side Rail Locking Screw
4. Interlock Cable Reel
5. AM Unit Outriggers
6. Straddle End Support
7. Support Vertical Rail
8. Side Lifting Rails
9. Short Outrigger Beams
10. Adjust Bracket
11. Vertical Rail
12. Adjust Bracket End Cap and Pin
13. Cable Adjustable Clevis

Figure 5-4. Straddle Extension Component Assembly.

https://truckmanualshub.com/

11. Turn winch handle clockwise just enough to start lifting side rails. Both cables must be lifting evenly.

If not lifting evenly, adjust slack out of long cable by:

- **a.** Lowering side rails by turning the winch handle enough to remove any tension on the winch cables.
- **b.** Remove the quick-release pin securing the winch cable clevis to the lifting lug on the side rail adjust bracket.
- **c.** Loosen the jam nut on the threaded cable end and turn the clevis end clockwise to shorten the cable.
- **d.** Before tightening the jam nut re-install the winch cable to the side rail lifting lug with the quick release pin.
- **e.** Turn winch handle to start lifting side rails, again observe winch cables. If cables are lifting evenly, retighten jam nut on threaded end of winch cable. If not lifting evenly repeat steps.

12. Connect the outrigger interlock cable ends from the retractable reels to the straddle adapter connector ends mounted on the AM base frame under the platform.

Positioning Straddle Unit and Lifting AM Machine

NOTICE

WHEN EXTENDING SIDE LIFTING RAILS, DO NOT OVER EXTEND THE RAILS INTO THE RED ZONE PAINTED ON THE RAILS.

With Straddle Extension installed to the AM machine properly the unit can be moved to it's work location. Make any final adjustments to the Straddle Extension before lifting the AM machine.

1. Use the following steps to lift the AM machine:

NOTE: *When winching, raise or lower each end of the straddle extension as evenly as possible to avoid binding the vertical rails in the lift rail end brackets.*

- **a.** Firmly grasp the handle on winch assembly and turn winch arm clockwise.
- **b.** When desired height has been reached, align the holes to allow the quick-release pins to be inserted securing side rails in position.
- **c.** When all pins are inserted and locked, crank winch handles counter-clockwise to release tension on the winch cables.
- **d.** Remove any end to end play in straddle unit by tightening the adjust bracket end cap - adjustment screws.

https://truckmanualshub.com/

2. With AM, Straddle Extension assembly in position, install the AM outriggers on each end of the Straddle Extension.
3. Level the AM and Straddle Extension Unit with the outrigger leveling jacks using the bubble level indicator located on the AM base frame.
4. Turn on the power switch at the ground control station on AM unit. Ensure the outrigger interlock LED's located on the straddle end supports are illuminated.
5. If all four (4) interlock LED's are illuminated the unit is ready for operation.
6. Prior to entering the platform insure the lift is properly set up and ready for use by checking:
   a. All short outrigger beam adapters are locked and secured.
   b. Side rail adjust bracket locking pins are installed and tension is released from winch cables.
   c. Adjust bracket end cap adjust screws have been tightened.
   d. Straddle and AM are leveled.

NOTE: *The AM-SE Ladder (option) is available to ease entry into the AM platform. The ladder is attached to either straddle side lifting rail on the straddle extension.*

DANGER

DO NOT ATTEMPT TO MOVE THE STRADDLE UNIT AROUND WITH THE AM MACHINE PLATFORM IN A ELEVATED POSITION.

Lowering AM Machine on Straddle Unit

1. With platform in stowed position, remove the outriggers and move the straddle and AM unit to an open area.
2. Loosen adjust screws on adjust bracket end caps *(See Figure 5-5.)*.
3. Crank the winch handle on each winch *(located on straddle end supports)* clockwise, just enough to start raising the side lifting rails, lifting the weight off of the quick-release pins installed through the side rail adjust bracket and the straddle end support vertical rails.
4. Remove **ONLY** the two (2) **SIDE RAIL QUICK-RELEASE PINS** installed through each side lifting rail adjust bracket, and the straddle end support vertical rails at all four (4) corners of the straddle extension. *(See Figure 5-5.)*

WARNING

*** DO NOT REMOVE THE END CAP PIN FROM THE ADJUST BRACKET UNTIL THE AM MACHINE IS FULLY LOWERED TO THE GROUND ON ITS CASTOR WHEELS,**

https://truckmanualshub.com/

AND STRADDLE END SUPPORTS ARE BEING DISASSEMBLED FROM SIDE RAILS. (SEE FIGURE 5-5.)

5. Carefully lower the side lifting rails *(and AM machine)* evenly, by turning the winch handle at each straddle end support counter-clockwise until the AM machine is fully lowered to the ground on it's caster wheels.

Straddle and AM Machine Disassembly

Once the AM machine is lowered on its castor wheels and outriggers are removed, reverse steps on "Mounting - Straddle Extension to AM Machine", steps 1 through 12.

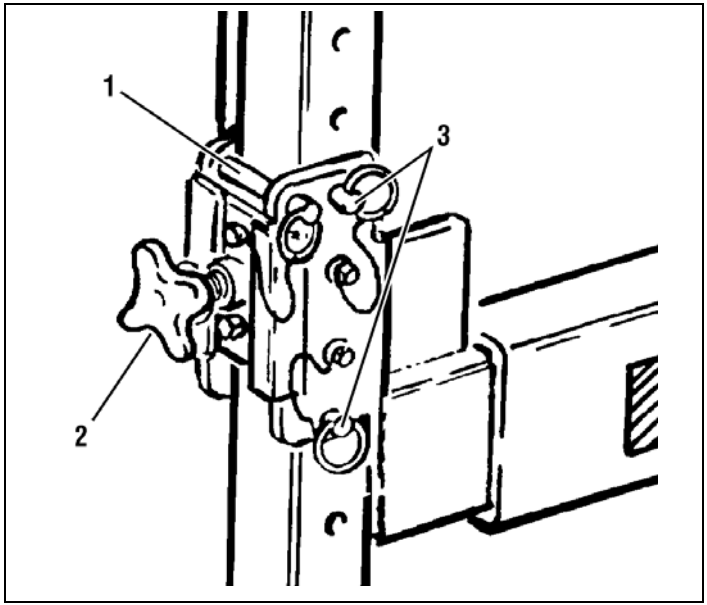

Figure 5-5. Side Lifting Rail - Quick Release Pins.

1. Adjust Bracket End Cap Pin (* **SEE WARNING**)
2. End Cap Adjust Screw
3. Side Rail Quick-Release Pins

https://truckmanualshub.com/

NOTES:

https://truckmanualshub.com/

SECTION 6. EMERGENCY PROCEDURES

6.1 GENERAL INFORMATION

This section explains the steps to be taken in case of an emergency situation while operating the machine.

6.2 EMERGENCY OPERATION

Operator Unable to Control Machine

IF THE PLATFORM OPERATOR IS PINNED, TRAPPED OR UNABLE TO OPERATE OR CONTROL THE MACHINE, USE THE FOLLOWING INSTRUCTIONS AS A GUIDELINE.

1. Other personnel should operate the machine from ground controls only as required.
2. Only qualified personnel in the platform may use the platform controls. DO NOT CONTINUE OPERATION IF CONTROLS DO NOT FUNCTION PROPERLY.
3. Cranes, forklift trucks or other equipment can be used to remove the platform occupant and stabilize motion of the machine.

Platform Caught Overhead

If the platform becomes jammed or snagged in overhead structures or equipment, rescue the platform occupant prior to freeing the machine.

Righting of Tipped Machine

Before righting a tipped machine, check machine for any damage which may prevent it from setting properly on its base wheels once in a vertical position, (i.e. base wheels damaged, base frame distorted, etc.). Use a crane, forklift or other suitable lifting equipment and carefully lift the machine to an upright position.

NOTICE

FOLLOWING ANY INCIDENT, THOROUGHLY INSPECT THE MACHINE AND TEST ALL FUNCTIONS. DO NOT LIFT ABOVE 10 FEET (3 METERS) UNTIL YOU ARE SURE THAT ALL DAMAGE HAS BEEN REPAIRED, IF REQUIRED, AND THAT ALL CONTROLS ARE OPERATING CORRECTLY.

https://truckmanualshub.com/

6.3 INCIDENT NOTIFICATION

JLG Industries, Inc. must be notified immediately of any incident involving a JLG product. Even if no injury or property damage is evident, the factory should be contacted by telephone and provided with all necessary details.

JLG Phone:

USA: 877-JLG-SAFE (554-7233)
(8am till 4:45pm EST)

EURO: 011 44 1 698 811005

AUSTRALIA: 011 61 2 65 811111

E-mail (USA): productsafety@jlg.com

Failure to notify the Manufacturer of an incident involving a JLG Industries product within 48 hours of such an occurrence may void any warranty consideration on that particular machine.

https://truckmanualshub.com/

SECTION 7. GENERAL SPECIFICATIONS AND OPERATOR MAINTENANCE

7.1 INTRODUCTION

This section of the manual provides additional necessary information to the operator for proper operation and maintenance of this machine.

The maintenance portion of this section is intended as information to assist the machine operator to perform daily maintenance tasks only, and does not replace the more thorough Preventive Maintenance and Inspection Schedule included in the Service and Maintenance Manual.

Other Publications Available Specific to this Machine:

Service and Maintenance Manual

ANSI. 3120752

CE. 3120872

Illustrated Parts Manual

ANSI. 3120753

CE. 3120873

https://truckmanualshub.com/

7.2 GENERAL SPECIFICATIONS

Machine Specifications

SPECIFICATION		20AM	25AM	30AM	36AM	41AM
Gross Machine Weight (*Platform Empty*):	DC:	785 lb. (356kg)	871 lb. (395kg)	941 lb. (427kg)	1043 lb. (473kg)	1142 lb. (518kg)
	AC:	717 lb. (325kg)	800 lb. (363kg)	871 lb. (395kg)	973 lb. (441kg)	1072 lb. (486kg)
Machine Height *(Platform Stowed)* ** Machine Height in Tilt-Back Mode*		77.3 in. (2m)	77.3 in. (2m)	77.3 in. (2m)	*77 in. (2m) 104.3 in. (2.64m)	*77 in. (2m) 104.3 in. (2.64m)
Maximum Outrigger Pad Load: *(per outrigger)*		386 lb. (175kg)	410 lb. (186kg)	396 lb. (180kg)	390 lb. (177kg)	412 lb. (187kg)
Outrigger Footprint: *(Length x Width)*		62 x 54 in. (1.57 x 1.37 m)		68 x 62 in. (1.72 x 1.57 m)	79 x 79 in. (2 x 2m)	79 x 79 in. (2 x 2m)
Machine Base - Overall : *(Length x Width)*		47 x 29 in.(1.19m x 74cm)	49 x 29 in. (1.24m x 74cm)	52 x 29 in. (1.32m x 74cm)	54.5 x 29 in. (1.38m x 74cm)	57.5 x 29 in. (1.46m x 74cm)
Maximum Wind Speed:		0 mph (0kph) - Machine rated for indoor use only				
Maximum Horizontal Manual Side Force: *(Platform fully extended with Maximum load)*		45 Pound Force (200 Newtons)				
Maximum Hydraulic System Pressure:		Pressure Relief Set to 2800 PSI (193 bar) at Factory				

https://truckmanualshub.com/

Electrical Specifications

SPECIFICATION		20AM	25AM	30AM	36AM	41AM
System Voltage:	DC Models:	12 Volts DC				
	AC Models:	100/120/240 Volts AC				
Battery Charger *(DC Models)*	Input:	120/240 Volts AC - 50/60 Hz - Voltage Selectable				
	Output:	12 Volt - 10 Amps DC - w/Auto Charge Sensing Circuit				

Battery Specifications

Battery Type:	WET/DRY COMBO	AGM (VRLA)
Voltage:	12 Volts DC	
Amp Hour (AH) Rating:	105 Amp Hr. @ 20 Hr.	100 Amp Hr. @ 20 Hr.
Reserve Capacity:	165 Min.	N/A
Cold Cranking Amps:	625 Amps @ 0° F	N/A
Weight:	54 lb. (24kg)	78 lb. (35kg)

https://truckmanualshub.com/

Platform Data

SPECIFICATION	20AM	25AM	30AM	36AM	41AM
Occupants: *(Persons allowed in Platform)*	1				
Platform Capacity: ANSI/C.S.A: *(U.S.A, Brazil, Japan, China, Latin America and C.S.A. - Canada: B354.1-04)*	350 lb. (160 kg)	350 lb. (160 kg)	350 lb. (160 kg)	300 lb. (135 kg)	300 lb. (135 kg)
CE: *(Europe, Australia)*	350 lb. (160 kg)	350 lb. (160 kg)	300 lb. (135 kg)	300 lb. (135 kg)	300 lb. (135 kg)
C.S.A.: *(C.S.A. - Canada: B354.1-M82)*	300 lb. (135 kg)	300 lb. (135 kg)	300 lb. (135 kg)	250 lb. (113 kg)	250 lb. (113 kg)
Platform Height - Mast Fully Extended - *(Ground to Platform Floor)*:	20 ft. (6.09 m)	25 ft. (7.62 m)	30 ft. (9.14 m)	36 ft. (11 m)	41 ft. (12.42 m)
Platform Working Height - *(Average Size Person):*	26 ft. (7.9 m)	31 ft. (9.4 m)	36 ft. (11 m)	42 ft. (12.8 m)	47 ft. (14.3 m)
Platform Cycle Performance -*(in seconds) (w/max. rated load)* **Fenner Brand** Pump - Lift Up:	50	62	72	128	120
Monarch Brand Pump - Lift Up: (DC)	51	57	67	97	101
Monarch Brand Pump -Lift Up: (AC)	70	73	80	110	108
Lift Down:	32-42	32-42	32-42	47-57	45-55

https://truckmanualshub.com/

Machine Component Weights

SPECIFICATION		20AM	25AM	30AM	36AM	41AM
Platform Weight:	Standard Platform:	55 lb. (25 kg)				
(Quick-Change Platforms)	Molded Platform:	70 lb. (32 kg)				
DC Voltage Battery Pack: *(Wet Cell)*		70 lb. (32 kg)				

Serial Number Locations

For machine identification, a serial number plate is affixed to the machine. The plate is located on the back of the mast, just above the mast support bracket.

https://truckmanualshub.com/

7.3 OPERATOR MAINTENANCE

Lubrication

Hydraulic Oil (HO)

HYDRAULIC SYSTEM OPERATING TEMPERATURE RANGE	SAE VISCOSITYGRADE
+0°F to +180°F (-18°C to -83°C)	10W
+0°F to +210°F (-18°C to +99°C)	10W-20, 10W-30
+50°F to +210°F (+10°C to +99°C)	20W-20

Hydraulic oils must have anti-wear qualities at least to API Service Classification GL-3, and sufficient chemical stability for mobile hydraulic system service. JLG Industries, recommends Mobilfluid 424 hydraulic oil, which has an SAE viscosity of 10W-30 and a viscosity index of 152.

For cold weather applications, i.e. when temperatures remain consistently below +20°F (–7°C) JLG recommends using Mobil DTE 13 hydraulic oil.

Aside from JLG recommendations, it is not advisable to mix oils of different brands or types, as they may not contain the same required additives or be of comparable viscosities. If use of hydraulic oil other than Mobilfluid 424 is desired, contact JLG Industries for proper recommendations.

Table 7-1. - Lubrication Specifications

KEY	SPECIFICATIONS
MPG -	Multipurpose Grease having a minimum dripping point of 350° F. Excellent water resistance and adhesive qualities, and being of extreme pressure type. (Timken OK 40 pounds minimum.)
EPGL -	Extreme Pressure Gear Lube (oil) meeting API service classification GL-5 or MIL-Spec MIL-L-2105.
HO -	Hydraulic Oil. ISO-Vg grade 32, 46.
CL -	Chain Lube. Use a good quality chain lubricant

NOTE: *Refer to Lubrication Chart, Table 7-2 for specific lubrication locations on machine.*

https://truckmanualshub.com/

Battery Maintenance

NOTE: *This information applies to wet cell batteries only. Do not attempt to open a maintenance-free sealed battery.*

Battery fluid level should be approximately 1/8" (3mm) below vent tubes. *(See Illustration)*

Keep cable connections clean and free of corrosion.

⚠ CAUTION

BATTERY ACID IS HIGHLY CORROSIVE. AVOID CONTACT WITH SKIN AND CLOTHING AT ALL TIMES.

BATTERY ACID RELEASES AN EXPLOSIVE GAS WHILE CHARGING, ALLOW NO OPEN FLAMES, SPARKS OR LIGHTED TOBACCO PRODUCTS IN THE AREA WHILE CHARGING BATTERIES. CHARGE BATTERIES ONLY IN A WELL VENTILATED AREA.

ADD ONLY DISTILLED WATER TO BATTERIES. WHEN ADDING DISTILLED WATER TO THE BATTERIES, A NON-METALLIC CONTAINER AND/OR FUNNEL MUST BE USED.

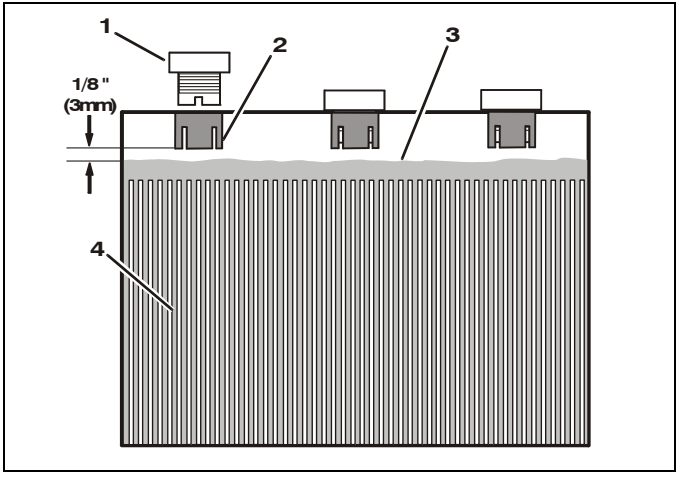

Battery Fluid Level

1. Battery Filler Cap
2. Vent Tube
3. Fluid Level
4. Cell Plates

https://truckmanualshub.com/

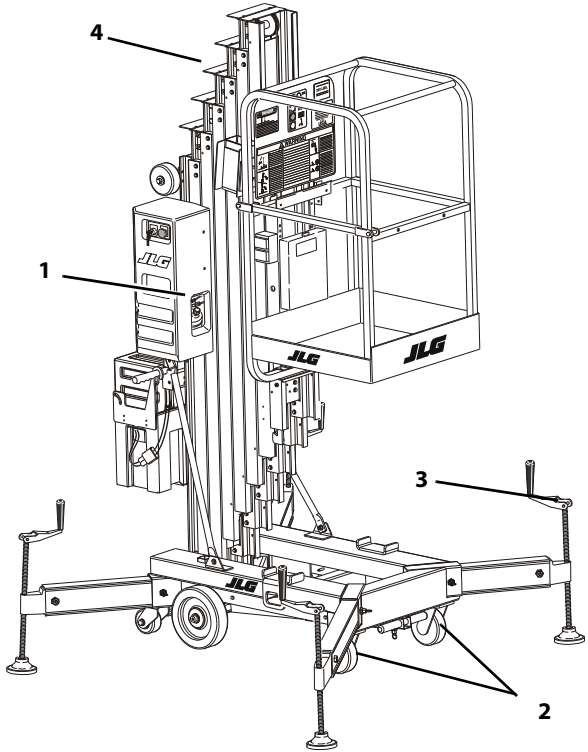

https://truckmanualshub.com/

Table 7-2. - Lubrication Intervals for Various Components

ITEM	COMPONENT	NO/TYPE LUBE POINTS	LUBE/METHOD	INTERVAL HOURS				COMMENTS
				3 MONTHS 150 Hrs.	6 MONTHS 300 Hrs.	1 YEAR 600 Hrs.	2 YEARS 1200 Hrs.	
1	Hydraulic Oil	Fill To Line on Reservoir 5 Qt. (4.3 L) Reservoir	HO/Check Hydraulic Oil Level HO/Change Hydraulic Oil				X	Check oil level every day. Change hydraulic oil every 2 years.
2	Swivel Raceways	2 - Front Casters	MPG - Pressure Gun		X			
3	Leveling Jack Screws	4 - Jack Threads	MPG - Brush		X			
4	Mast Chains *	2 - Per Section	CL - Brush or Spray		X			Inspect, lubricate if drying or rusting.

* Applies Only to Mast Sections with Chains.

Key to Lubricants:
MPG - Multipurpose Grease
HO - Hydraulic Oil - ISO-Vg grade 32, 46.
CL - Chain Lube. Use a good quality chain lubricant

Notes:
1. Be certain to lubricate like items on each side of the machine.
2. Recommended lubricating intervals are based on normal use. If machine is subjected to severe operating conditions, such as a high number of cycles, location, corrosive/dirty environment, etc., user must adjust lubricating requirements accordingly.
3. Lubricating intervals are calculated on 50 hours of machine operation a week.
4. Prior to checking hydraulic oil level, operate machine through one complete cycle of lift function (full up and down). Failure to do so will result in incorrect oil level reading on the hydraulic reservoir.

https://truckmanualshub.com/

7.4 SUPPLEMENTAL INFORMATION

The following information is provided in accordance with the requirements of the European Machinery Directive 2006/42/EC and is only applicable to CE machines.

For electric powered machines, the equivalent continuous A-Weighted sound pressure level at the work platform is less than 70dB(A).

For combustion engine powered machines, guaranteed Sound Power Level (LWA) per European Directive 2000/ 14/EC (Noise Emission in the Environment by Equipment for Use Outdoors) based on test methods in accordance with Annex III, Part B, Method 1 and 0 of the directive, is 109 dB.

The vibration total value to which the hand-arm system is subjected does not exceed 2,5 m/s2. The highest root mean square value of weighted acceleration to which the whole body is subjected does not exceed 0,5 m/s2.

https://truckmanualshub.com/

SECTION 8. INSPECTION AND REPAIR LOG

Machine Serial Number: _____

Table 8-1. Inspection and Repair Log

DATE	COMMENTS

https://truckmanualshub.com/

Machine Serial Number: _____

Table 8-1. Inspection and Repair Log

DATE	COMMENTS

An Oshkosh Corporation Company

TRANSFER OF OWNERSHIP

To Product Owner:

If you now own but ARE NOT the original purchaser of the product covered by this manual, we would like to know who you are. For the purpose of receiving safety-related bulletins, it is very important to keep JLG Industries, Inc. updated with the current ownership of all JLG products. JLG maintains owner information for each JLG product and uses this information in cases where owner notification is necessary.

Please use this form to provide JLG with updated information with regard to the current ownership of JLG products. Please return completed form to the JLG Product Safety & Reliability Department via facsimile or mail to address as specified below.

Thank You,

Product Safety & Reliability Department

JLG Industries, Inc.

13224 Fountainhead Plaza
Hagerstown, MD 21742
USA
Telephone: +1-717-485-6591
Fax: +1-301-745-3713

https://truckmanualshub.com/

NOTE: Leased or rented units should not be included on this form.

Mfg. Model: _____

Serial Number: _____

Previous Owner: _____

Address: _____

_____

Country: _____ **Telephone: (_____)** _____

Date of Transfer: _____

Current Owner: _____

Address: _____

_____

Country: _____ **Telephone: (_____)** _____

Who in your organization should we notify?

Name: _____

Title:_____

https://truckmanualshub.com/

https://truckmanualshub.com/

PROPOSITION 65 WARNING

- Battery posts, terminals and related accessories contain lead and lead compounds, chemicals known to the State of California to cause cancer and reproductive harm.
- Batteries also contain other chemicals known to the State of California to cause cancer.
- Wash hands after handling.

https://truckmanualshub.com/

An Oshkosh Corporation Company

JLG Industries, Inc.
1 JLG Drive
McConnellsburg PA. 17233-9533
USA

(717) 485-5161 (Corporate)
(800) 544-5438 (Service)
(717) 485-6417
www.jlg.com

JLG Worldwide Locations

JLG Industries
358 Park Road
Regents Park
NSW 2143
Sydney 2143
Australia
+6 (12) 87186300
+6 (12) 65813058
Email: techservicesauc@jlg.com

JLG Ground Support Oude
Bunders 1034
Breitwaterstraat 12A
3630 Maasmechelen
Belgium
+32 (0) 89 84 82 26
Email: emeaservice@jlg.com

JLG Latino Americana LTDA
Rua Antonia Martins Luiz, 580
Distrito Industrial Joao Narezzi
Indaiatuba-SP 13347-404
Brasil
+55 (19) 3936 7664 (Parts)
+55(19)3936 9049 (Service)
Email: comercialpecas@jlg.com
Email: servicos@jlg.com

Oshkosh-JLG (Tianjin) Equipment
Technology LTD
Shanghai Branch
No 465 Xiao Nan Road
Feng Xian District
Shanghai 201204
China
+86 (21) 800 819 0050

JLG Industries Dubai
Jafza View
PO Box 262728, LB 19
20th Floor, Office 05
Jebel Ali, Dubai
+971 (0) 4 884 1131
+971 (0) 4 884 7683
Email: emeaservice@jlg.com

JLG France SAS
Z.I. Guillaume Mon Amy
30204 Fauillet
47400 Tonniens
France
+33 (0) 553 84 85 86
+33 (0) 553 84 85 74
Email: pieces@jlg.com

JLG Deutschland GmbH
Max Planck Str. 21
27721 Ritterhude - Ihlpohl
Germany
+49 (0) 421 69350-0
+49 (0) 421 69350-45
Email:german-parts@jlg.com

JLG Equipment Services Ltd.
Rm 1107 Landmark North
39 Lung Sum Avenue
Sheung Shui N. T.
Hong Kong
+(852) 2639 5783
+(852) 2639 5797

JLG Industries (Italia) S.R.L.
Via Po. 22
20010 Pregnana Milanese (MI)
Italy
+39 (0) 2 9359 5210
+39 (0) 2 9359 5211
Email: ricambi@jlg.com

JLG EMEA B.V.
Polaris Avenue 63
2132 JH Hoofdorf
The Netherlands
+31 (0) 23 565 5665
Email: emeaservice@jlg.com

JLG NZ Access Equipment & Services
2B Fisher Cresent
Mt Wellington 1060
Auckland, New Zealand
+6 (12) 87186300
+6 (12) 65813058
Email:techservicesaus@jlg.com

JLG Industries
Vahutinskoe shosse 24b.
Khimki
Moscow Region 141400
Russia Federation
+7 (499) 922 06 99
+7 (499) 922 06 99

Oshkosh-JLG Singapore Technology
Equipment Pte Ltd.
35 Tuas Avenue 2
Jurong Industrial Estate
Singapore 639454
+65 6591 9030
+65 6591 9045
Email: SEA@jlg.com

JLG Iberica S.L.
Trapadella, 2
Pol. Ind. Castellbisbal Sur
08755 Castellbisbal Barcelona
Spain
+34 (0) 93 772 47 00
+34 (0) 93 771 1762
Email:parts_iberica@jlg.com

JLG Industries (UK) Ltd.
Bentley House
Bentley Avenue
Middleton, Greater Manchester
M24 2GP
United Kingdom
+44 (0) 161 654 1000
+44 (0) 161 654 1003
Email: ukparts@jlg.com

JLG Sverige AB
Enkopingsvagen 150
176 27 Jarfalla
Sweden
+46 (0) 8 506 595 00
+46 (0) 8 506 595 27
Email: nordicsupport@jlg.com