ENGINE-POWERED SCISSOR LIFTS

Operator's manual

ENGINE-POWERED SCISSOR LIFTS

Compact 10DX (Compact 2668RT)
Compact 12DX (Compact 3368RT)
H12SX (HS3388RT) - H12SXL (HS3388RTXL)
H15SX (HS4388RT) - H15SXL (HS4388RTXL)
H18SX (HS5388RT) - H18SXL (HS5388RTXL)

4000014860 e10 12 EN

https://truckmanualshub.com/

CONTENTS

1 - Operator's manual 7
2 - After Sales Service 7
3 - Compliance 8
4 - HAULOTTE Services® contact details. 9

A

SAFETY PRECAUTIONS

1 - Recommendations 11
1.1 - Operator's manual 11
1.2 - Symbols used 11
1.3 - Label colors 12
2 - Pre-operation instructions 13
2.1 - General instructions 13
2.2 - Specific instructions. 13
3 - Operation instructions 14
3.1 - Prohibitions. 14
3.2 - Potential risks. 15
3.2.1 - Risk of command system disturbance 15
3.2.2 - Risk of falling 15
3.2.3 - Risk of electrocution 16
3.2.4 - Risk of uncontrolled movement and overturning 16
3.2.5 - Risk of burns and explosion 18
3.2.6 - Risk of crushing and collision 18

B

INTERVENOR'S RESPONSIBILITY

1 - Owner's (or hirer's) responsibility. 19
2 - Employer's responsibility 19
3 - Trainer's responsibility 19
4 - Operator's responsibility 19
5 - Inspection and maintenance 20

C

MACHINE LAYOUT

1 - Identification 21
2 - Main components 21
3 - Safety devices. 23
3.1 - Sliding (or swinging) intermediate guardrail. 23
3.2 - Anchorage point (Please see machine configuration) 23
3.3 - Maintenance support. 24
3.4 - Folding guardrails - Option 24
4 - Labels. 25
4.1 - Classification plan 25
4.1.1 - Red labels. 25
4.1.2 - Orange labels 28
4.1.3 - Yellow labels. 30
4.1.4 - Other labels 32
4.1.5 - Green labels 33
4.1.6 - Blue labels 33
4.2 - Identification 34
5 - Control boxes 46
5.1 - Ground control box - Emergency control panel. 46
5.2 - Platform control box 50

D

OPERATING PRINCIPLE

1 - Description 55
2 - Safety devices. 55
2.1 - Activation of controls 55
2.2 - Plateform lifting. 55
2.3 - Drive speed. 56
2.4 - On-board electronics 56
2.5 - Space for operating temperature thermostat 57
2.6 - Detection of internal fault 57
2.7 - Automatic engine cut-out. 57
2.8 - Load limiting in the platform (if fitted) 58
2.9 - Chassis tilt 58
2.10 - Drive buzzer 58

E

DRIVING

1 - Recommendations 59
2 - Checks before use 59
2.1 - Visual inspections 59
2.1.1 - General mechanical functions 59
2.1.2 - Environment 61
2.2 - Functional tests 62
2.2.1 - Safety features 62
2.2.2 - Ground control box controls (emergency station) 62
2.2.3 - Platform control box controls (driving station) 63
2.3 - Periodical checks. 64
2.4 - Repairs and adjustments. 64
2.5 - Inspection / Testing requirements 64
3 - Operation. 65
3.1 - Test procedure. 65
3.1.1 - Emergency stop button operation 65
3.1.2 - Tilt sensor switch operation 66
3.1.3 - Visual and sound alarms 66
3.1.4 - Weighing system 66
3.2 - Operation from ground position 66
3.2.1 - Machine start-up. 66
3.2.2 - Machine shutdown 67
3.2.3 - Movement control. 67
3.2.4 - Other controls. 68
3.3 - Operations from the platform 68
3.3.1 - Machine start-up. 68
3.3.2 - Machine shutdown 69
3.3.3 - Movement control. 69
3.3.4 - Other controls. 73

CONTENTS

F

SPECIAL PROCEDURE

1 - Emergency lowering 75
1.1 - Principle 75
1.2 - Procedure 75
1.3 - Extraordinary procedure 76
2 - Lowering for repairs 77
2.1 - Principle 77
2.2 - Procedure 77
3 - Towing 78
3.1 - Dissengaging the drive hubs 78
3.2 - Brake release 79
3.3 - Reengaging the drice hubs 80
4 - Loading and unloading 81
4.1 - Principle 81
4.1.1 - Loading by lifting 82
4.2 - Putting in transport position 86
4.3 - Unloading 88
4.4 - Warning 88
5 - Detection of internal fault 89
5.1 - Principle 89
5.2 - Procedure 89
6 - On-board generator(Option) 90
6.1 - Principle 90
6.2 - Procedure 90

G

TECHNICAL CHARACTERISTICS

1 - Main characteristics 91
2 - Overall dimensions 103
3 - Working area 106
3.1 - Machine COMPACT 10DX (COMPACT 2668RT) 106
3.2 - Machine COMPACT 12DX (COMPACT 3368RT) 107
3.3 - Machine H12SX (HS3388RT) 108
3.4 - Machine H15SX (HS4388RT) 109
3.5 - Machine H18SX (HS5388RT) 110
3.6 - Machine H12SXL (HS3388RTXL) 111
3.7 - Machine H15SXL (HS4388RTL) 112
3.8 - Machine H18SXL (HS5388RTXL) 113
4 - AS - CE standard specificities 114
4.1 - Overload test 114
4.2 - Functional test 114
4.3 - Stability test 115
5 - Declaration of conformity 118

H

INTERVENTION REGISTER

1 - Intervention register 119

https://truckmanualshub.com/

You have just purchased a HAULOTTE® product and we would like to thank you for your business.

1 - Operator's manual

As stated on the delivery slip, this manual is one of the documents in the on-board document holder provided upon delivery of your HAULOTTE® machine.

The operator manual is a translation of the original instructions.

Safe operation of this product can only be assured if you follow the operating instructions contained in this manual.

We would particularly like to draw your attention to 2 essential points :

- Compliance with safety instruction (machine, use, environment)
- Use of the equipment within the performance limits.

With regard to the designation of our equipment, we stress that this is purely for commercial purposes and not to be confused with the technical characteristics. Only the tables of technical characteristics should be used to study the suitability of the equipment for the intended use.

2 - After Sales Service

Our HAULOTTE Services® After Sales Service is at your disposal throughout your machine's service life to ensure optimal use of your HAULOTTE product..

- When contacting our After Sales Service, ensure that you provide the machine model and serial number.
- When ordering any consumables or spare parts, please use this manual and the Haulotte Essential catalogue to receive your genuine HAULOTTE spare parts, your only guarantee of parts interchangeability and correct machine operation..
- If there is an equipment malfunction involving a HAULOTTE® product, then contact HAULOTTE Services® immediately even if the malfunction does not involve material and/or bodily damage..
- HAULOTTE® must be informed in the event of an incident that either involves one of these products or has caused bodily injury or significant deterioration of property (personal property or the product); contact HAULOTTE Services® immediately (See : HAULOTTE Services® contact details)

https://truckmanualshub.com/

3 - Compliance

We would like to remind you that HAULOTTE® complies with the provisions of any applicable directives applicable to this type of machine.

HAULOTTE advises you that NO modifications carried out without the written permission of HAULOTTE® will void the HAULOTTE warranty..

HAULOTTE® cannot be held liable for any changes to the technical specifications contained in this manual.

HAULOTTE® reserves the right to alter technical specifications and to make improvements or modifications to the machine without modifying this manual.

Certain options can modify the machine's operating characteristics and its associated safety. If your machine was originally delivered with options fitted, replacing a safety component associated with a particular options not require any particular precautions other than those associated with the installation itself (static test).

Otherwise, it is essential to follow the manufacturer's recommendations below :

- **Installation by authorised HAULOTTE® personnel only.**
- **Update the manufacturer's identification plate.**
- **Have stability tests carried out by a certified agency/competent person.**
- **Ensure label compliance.**

https://truckmanualshub.com/

4 - HAULOTTE Services® contact details

HAULOTTE Services® contact details

	HAULOTTE FRANCE PARC DES LUMIERES 601 RUE NICEPHORE NIEPCE 69800 SAINT-PRIEST **TECHNICAL Department:** **+33 (0)820 200 089** **SPARE PARTS : +33 (0)820 205 344** FAX : +33 (0)4 72 88 01 43 E-mail : haulottefrance@haulotte.com www.haulotte.fr		HAULOTTE ITALIA VIA LOMBARDIA 15 20098 SAN GIULIANO MILANESE (MI) **TEL: +39 02 98 97 01** FAX: +39 02 9897 01 25 E-mail : haulotteitalia@haulotte.com www.haulotte.it		
	HAULOTTE HUBARBEITSBÜHNEN GmbH AN DER MÖHLINHALLE 1 D-79189 BAD KROZINGEN-HAUSEN **TEL : +49 (0) 7633 806 92-0** FAX : +49 (0) 7633 806 92-18 E.mail : haulotte@de.haulotte.com www.haulotte.de		HAULOTTE VOSTOK, OOO 35, SVOBODY STREET Bldg. 19 125362 MOSCOW RUSSIAN FEDERATION **TEL/FAX : +7 495 221 53 02 / 03** E.mail : info@haulottevostok.ru www.haulotte-international.com		HAULOTTE DO BRASIL AV. Tucunaré, 790 CEP: 06460-020 – TAMBORE BARUERI – SAO PAULO – BRASIL **TEL : +55 11 4208 4206** FAX : +55 11 4191 4677 E.mail : haulotte@haulotte.com.br www.haulotte.com.br
	HAULOTTE IBERICA C/ARGENTINA N° 13 - P.I. LA GARENA 28806 ALCALA DE HENARES MADRID **TEL : +34 902 886 455** TEL SAT : +34 902 886 444 FAX : +34 91 656 97 81 E.mail : iberica@haulotte.com www.haulotte.es		HAULOTTE POLSKA Sp. Z.o.o. UL. GRANICZNA 22 05-090 RASZYN - JANKI **TEL : +48 22 720 08 80** FAX : +48 22 720 35 06 E-mail : haulottepolska@haulotte.com www.haulotte.pl		HAULOTTE MÉXICO, Sa de Cv Calle 9 Este, Lote 18, Civac, Jiutepec, Morelos CP 62500 Cuernavaca México **TEL : +52 77 7321 7923** FAX : +52 77 7516 8234 E-mail : haulotte.mexico@haulotte.com www.haulotte-international.com
	HAULOTTE PORTUGAL ESTRADA NACIONAL NUM. 10 KM. 140 - LETRA K 2695 - 066 BOBADELA LRS **TEL : + 351 21 995 98 10** FAX : + 351 21 995 98 19 E.mail : haulotteportugal@haulotte.com www.haulotte.es		HAULOTTE SINGAPORE Pte Ltd. No.26 CHANGI NORTH WAY, SINGAPORE 498812 **Parts and service Hotline: +65 6546 6179** FAX : +65 6536 3969 E-mail: haulotteasia@haulotte.com www.haulotte.sg		HAULOTTE MIDDLE EAST FZE PO BOX 293881 Dubaï Airport Free Zone DUBAÏ United Arab Emirates **TEL : +971 (0)4 299 77 35** FAX : +971 (0) 4 299 60 28 E-mail : haulottemiddle-east@haulotte.com www.haulotte-international.com
	HAULOTTE SCANDINAVIA AB Taljegårdsgatan 12 431 53 Mölndal SWEDEN **TEL : +46 31 744 32 90** **FAX : +46 31 744 32 99** E-mail : info@se.haulotte.com spares@se.haulotte.com www.haulotte.se		HAULOTTE TRADING (SHANGHAI) Co. Ltd. #7 WORKSHOP No 191 HUA JIN ROAD MIN HANG DISTRICT SHANGHAI CHINA 201108 **TEL : +86 21 6442 6610** FAX : +86 21 6442 6619 E-mail : haulotteshanghai@haulotte.com www.haulotte.cn		HAULOTTE ARGENTINA Ruta Panamericana Km. 34,300 (Ramal A Escobar) 1615 Gran Bourg (Provincia de Buenos Aires) Argentina **TEL.: +54 033 27 45 21 91** FAX. +54 033 27 45 72 19 E-mail : haulotteargentina@haulotte.com www.haulotte-international.com
	HAULOTTE UK Ltd STAFFORD PARK 6 TELFORD - SHROPSHIRE TF3 3AT **TEL : +44 (0)1952 292753** FAX : + 44 (0)1952 292758 E.mail : salesuk@haulotte.com www.haulotte.co.uk		HAULOTTE GROUP / BILJAX 125 TAYLOR PARKWAY ARCHBOLD, OH 43502 – USA **TEL : +1 419 445 8915** FAX :+1 419 445 0367 Toll free : +1 800 537 0540 E.mail : sales@us.haulotte.com www.haulotte-usa.com		HAULOTTE GROUP 1301 E PATRICK STREET FREDERICK, MD 21701 – USA **TEL : +1 419 445 8915** FAX :+1 419 445 0367 Toll free : +1 800 537 0540 E.mail : sales@us.haulotte.com www.haulotte-usa.com
	HAULOTTE NETHERLANDS BV Koopvaardijweg 26 4906 CV OOSTERHOUT - Nederland **TEL : +31 (0) 162 670 707** FAX : +31 (0) 162 670 710 E.mail info@haulotte.nl		HAULOTTE AUSTRALIA PTY Ltd 46 GREENS ROAD DANDENONG – VIC – 3175 **TEL : +61 (0)3 9792 1000** FAX : +61 (0)3 9792 1011 E.mail : sales@haulotte.com.au		

https://truckmanualshub.com/

https://truckmanualshub.com/

1 - Recommendations

1.1 - OPERATOR'S MANUAL

This operators manual is specific to the HAULOTTE® products listed on the cover page of this manual..

The operator manual does not replace the basic training required for all worksite equipment operators.

HAULOTTE® has compiled this manual to assist in safe and efficient operation of the products covered by the manual.

This manual must be kept on the machine (or in the cab in its storage case. The manual must be available to all operators and must be kept in good condition. Additional copies can be ordered from HAULOTTE Services®.

1.2 - SYMBOLS USED

Symbols are used to alert the operator to safety precautions or to highlight practical information.

Legend

Symbol	Meaning
	Danger : Risk of injury or death (work safety)
	Caution : Risk of material damage (work quality)
	Prohibition relating to work safety and quality
	Reminder : No identified risk, but a reminder of the need for common sense, good practice or pre-action prerequisites
	Cross-reference to another part of the manual (see section or sheet)
	Cross-reference to another manual (see manual)
	Cross-reference to repairs (contact HAULOTTE Services®)
N.B. :	Additional technical information

https://truckmanualshub.com/

1.3 - LABEL COLORS

The potential dangers and any specific regulations are indicated around the product by labels and identification plates.

The labels must be kept in good condition. Additional labels can be obtained from HAULOTTE Services®.

Familiarize yourself with the labels and their respective color codes.

Label color code

Labels	Color	Meaning
	Red	Potentially fatal danger
	Orange	Risk of serious injury
	Yellow	Risk of material damage and/or minor injury
	Other	Additional technical information
	Green	Maintenance operation or information

Label color code-For Russia and the Ukraine only

Labels	Color	Meaning
	Red	Prohibitions - Danger
	Yellow	Warning : Risk of material damage and/or minor injury
	Blue	Precaution
	Blue	Information
	Other	Additional technical information

https://truckmanualshub.com/

2 - Pre-operation instructions

2.1 - GENERAL INSTRUCTIONS

- **The employer has the obligation to issue a driving permit to the operator.**
- **The employer is obliged to inform the operator of the local regulations.**

Do not operate the product in the following situations :

- On soft, unstable or cluttered ground.
- With wind blowing faster than the permissible limit. Check the maximum value in the technical characteristics (Section G 1-Main characteristics). Consult the Beaufort scale (Section A 3.2.4-Risk of uncontrolled movement and overturning).
- Close to power lines. Respect the safety distance (Section A 3.2.3-Risk of electrocution).
- At ambient temperatures higher than 45 °C(113 °F) and lower than -15 °C(5 °F) . Consult HAULOTTE® if it is necessary to work outside this range.
- In an explosive atmosphere.
- During storms (risk of lightning).
- In the presence of strong electromagnetic fields (radar, etc ...).

***N.B.**-:-You are advised to use the machine under "NORMAL" climatic conditions.. If you need to use the machine in climatic conditions likely to cause deterioration (humidity, temperatures outside the recommended ranges, salinity, corrosiveness, atmospheric pressure), contact HAULOTTE Services®. Reduce intervals between servicing.*

***N.B.**-:-Whilst the machine is not in use, care must be taken to ensure that if the machine is not locked in a secure location, that the unit key switch is removed to prevent unauthorised use of the machine.*

2.2 - SPECIFIC INSTRUCTIONS

Do not operate the product in the following situations :

- If the load in the platform exceeds the maximum load authorized. Check the maximum value in the technical characteristics (Section G 1-Main characteristics).
- If the ground slope is greater than the permissible limit. Check the maximum value in the technical characteristics (Section G 1-Main characteristics).
- In a non-ventilated area as the exhaust gases are toxic.
- At night unless the machine is equipped with the optional light.
- If the number of persons exceeds the permissible limit. Check the maximum value in the technical characteristics (Section G 1-Main characteristics).
- If the side force is greater than the permissible force. Check the maximum value in the technical characteristics (Section G 1-Main characteristics).

https://truckmanualshub.com/

3 - Operation instructions

It is preferable to operate the machine on flat, consolidated ground (tarmac, concrete, etc.).

3.1 - PROHIBITIONS

- Never use a faulty machine (hydraulic leaks, worn tires, malfunction).
- Never operate the machine controls suddenly.
- Never place the machine against a structure to hold that structure in place.
- Never use the machine to tow other machines or to drag materials.
- Never expose the batteries or electrical components to water (pressure cleaner, rain).
- Never disable the safety devices.
- Do not make contact with a fixed or mobile obstacle. The contact can cause premature deterioration of the structure and lead to the corruption of certain safety elements.
- Do not climb onto the covers.
- Never use the machine with only an operator in the platform. It must be used by 2 operators.
- Never use the machine when the platform is cluttered.
- Never increase the surface area of the platform by using floor extensions or accessories not authorized by HAULOTTE®.
- Never leave the hydraulic cylinders fully extended or retracted before switching off the machine, or during an extended stop period.

- Never use the machine with material or objects suspended from the guard-rail.
- Never use the machine with elements that can increase the wind force (panels).
- Never increase the working height by using attachments (ladder).
- Never use the guardrail as a means of access for climbing in or out of the platform. The basket can be easily accessed in its low position. For machines fitted with : Steps have been provided for this purpose where required.
- Never climb on the guardrail.
- Do not use the machine if the guard rails are not correctly installed and locked.
- Never use the machine without fitting the sliding (or rotating) middle rail, closing the safety gate or the swing gates beforehand.
- Never use the machine as a crane, material lift or elevator.
- Never use the machine for any other purpose than to transport people, their tools and material to the desired place.
- Never drive fast in narrow or cluttered areas. Keep speed under control in bends.
- Never tow the machine over extended distances (it must be transported on a trailer).

https://truckmanualshub.com/

3.2 - POTENTIAL RISKS

3.2.1 - Risk of command system disturbance

Risk of disrupted movement. Maintain clearance from high voltage lines or magnetic fields.

3.2.2 - Risk of falling

When in the platform, respect the following instructions :

- Carry individual protection equipment adapted to the work conditions and local rules.
- Avoid contact with fixed or mobile obstacles (other machines).
- Ensure that the adjustable midrail is closed (low position and against the guardrails).
- Ensure that the gate is closed and locked (For machines fitted with).
- Hold on securely to the guardrails during elevation and driving.
- Do not sit, stand, or climb on the platform guard rails.
- Ensure that guard rails are correctly installed and locked.
- Always keep your feet firmly on the floor of the platform.
- Remove any trace of oil or grease from the steps, floor, handrail and the guardrails.
- Keep the floor of the platform free of debris.
- Do not leave the platform until it is fully in its stowed position.
- Do not climb on to the platform if the machine is not in the stowed position.

To climb up or climb down from the platform :

- The machine must be completely stowed.
- Face the machine to access the entry opening to the platform
- Keep 3 support points between the steps and the guardrail

https://truckmanualshub.com/

3.2.3 - Risk of electrocution

The machine is not electrically insulated and does not offer any insulation protection.

The risks of electrocution are high in the following situations :

- Close to live power lines, consider the movement of the machine and the sway of the electric power lines particularly in windy conditions.
- In the event that you were to make accidental contact with a high voltage line, wait for the power to the line to be switched off before operating the machine.
- During storms.

Never use the machine as a welding earth.

Maintain a minimum safe distance with regard to power lines and electrical devices.

Respect the local rules and the minimum safety distance from power lines..

Minimum safety distance

Electric voltage	Minimum safety distance	
	Mètre	Feet
0 - 300 V	Avoid contact	
300 V - 50 kV	3	10
50 - 200 kV	5	15
200 - 350 kV	6	20
350 - 500 kV	8	25
500 - 750 kV	11	35
750 - 1000 kV	14	45

***N.B.**-:-This table is applicable, except when the local regulations are more strict.*

3.2.4 - Risk of uncontrolled movement and overturning

When in the platform, respect the following instructions :

- Before operating the machine on any indoor or outdoor surface (premises, bridge, truck, etc.), check that the surface is capable of supporting the combined machine weight and platform capacity. Check the maximum value in the technical characteristics (Section G 1-Main characteristics).
- Remain vigilant of driving direction reversal at the platform. Check the driving direction with the help of the red or green arrow on the chassis relative to the red and green arrows on the platform control box.
- Always ensure that the chassis is never driven any closer than 1 m(3 ft3 in) m to holes, bumps, tilts, obstructions, debris and ground coverings that may hide holes and other dangers.
- During motion direction reversal from the platform or ground control box, the joysticks or switches must be stopped in neutral position before reversing the direction of motion.
- Taking note of the overall load dimensions and weight, place the loads in the centre of the platform or distribute them it a uniform manner.
- If the tilt alarm sounds when the platform is raised, lower platform completely, then reposition machine onto level ground before raising platform.

https://truckmanualshub.com/

- **Do not drive the machine on slopes or tilts beyond the design limits. Check the maximum value in the technical characteristics(Section G 1-Main characteristics).**
- **Do not travel down slopes at high speed.**
- **Do not use the machine (elevation and travel) on an incline greater than that permitted by the slope sensor.**
- **Do not drive in reverse (direction opposite the field of vision).**
- **Never use the machine in winds exceeding the permissible limit.**
- **Do not increase the surface area exposed to wind. The greater the surface area exposed, the more unstable the machine becomes.**

N.B.-:-*The Beaufort scale measures the wind force with a graduation system. A wind speed range at 10 m(32 ft9 in) above flat, clear land is associated with each degree.*

Beaufort scale

Force	Meteorological description	Observed effects	m/s	km/h	mph
0	Calm	Smoke rises vertically.	0 - 0,2	0 - 1	0 - 0,62
1	Very light breeze	Smoke indicates the wind direction.	0,3 - 1,5	1 - 5	0,62 - 3,11
2	Light breeze	Wind felt on the face. Leaves rustle. Weather vanes turn.	1,6 - 3,3	6 - 11	3,72 - 6,84
3	Slight breeze	Leaves and small branches in constant movement. Flags move slightly.	3,4 - 5,4	12 - 19	7,46 - 11,8
4	Nice breeze	Dust and loose papers fly. Small branches bend.	5,5 - 7,9	20 - 28	12,43 - 17,4
5	Nice breeze	Small trees sway. Crested wavelets form on inland waters.	8,0 - 10,7	29 - 38	18,02 - 23,6
6	Cool wind	Large branches shake. Power lines and chimneys 'sing'. It is difficult to use an umbrella.	10,8 - 13,8	39 - 49	24,23 - 30,45
7	Strong cool wind	All trees shake. Walking against the wind becomes difficult.	13,9 - 17,1	50 - 61	31 - 37,9
8	Squall	Some branches break. Generally we cannot walk against the wind.	17,2 - 20,7	62 - 74	38,53 - 45,98
9	Strong squall	The wind causes slight damage to buildings. Tiles and chimney stacks are blown off.	20,8 - 24,4	75 - 88	46,60 - 54,68

https://truckmanualshub.com/

3.2.5 - Risk of burns and explosion

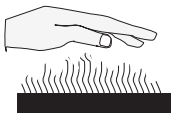

For any intervention on the power sources, wear glasses and protective clothes (acid spray).

N.B.-:-*Acid is neutralised with sodium bicarbonate and water.*

- **Do not work in an explosive or flammable atmosphere (spark, flame, etc.).**
- **Do not touch the hot parts of the hydraulic power source (engine, filters, etc.).**
- **Do not bridge the battery terminals with metallic objects.**
- **Do not service the battery close to a spark, naked flame, glowing tobacco (emissions of gas).**

- **Do not fill up the fuel tank, when the engine is running and/or close to a naked (open) flame.**

3.2.6 - Risk of crushing and collision

When in the platform, respect the following instructions :

- During operation, keep all the parts of the body inside the platform.
- Keep hands and limbs well away from the scissor arms.
- Adjust the movement speed to the ground conditions (traffic, slope, etc.).
- Respect stopping distances after the controls are released :
  - 3 m(9 ft10 in) at high speed.
  - 1 m(3 ft3 in) at low speed.
- Ensure there are no obstacles (structure) in the work area.
- Always obtain assistance from a guide on the ground when manoeuvring.
- All the personnel in the platform or on the within the vicinity of the machine must wear Personal Protection Equipment (safety helmet, etc.).
- When moving the machine, ensure that the machine operating areas is free of persons and obstacles.

Do not operate other machines (crane, platform, etc.) in the work area.

Take account of the distance, reduced visibility and blind spots during use of the machine.

https://truckmanualshub.com/

B - Intervenor's responsibility

1 - Owner's (or hirer's) responsibility

The owner (or hirer) has the obligation to inform operators of the instructions contained in the Operator Manual.

The owner (or hirer) has the obligation to renew all manuals or labels that are either missing or in bad condition. Additional copies can be ordered from HAULOTTE Services®.

The owner (or hirer) is responsible for applying the local regulations regarding operation of the machine.

2 - Employer's responsibility

The employer has the obligation to issue a driving permit to the operator.

***N.B.**-:-In accordance with the regulation in the country where the machine is operating, the user must be authorized to drive by the doctor of Labour Ministry.*

Forbid anyone from operating the machine who is :
- **Under the influence of drugs, alcohol, etc..**
- **subject to fits, loss of motor skills, dizziness, etc..**

3 - Trainer's responsibility

The trainer must be qualified to provide training to operators in accordance with applicable local regulations. The training must be given in an obstacle-free area until the trainee is considered competent as defined by the training program undertaken.

4 - Operator's responsibility

The operator must read and understand the contents of this manual and the labels affixed on the machine.

The operator must inform the owner (or hirer) if the manual or any labels are missing or in poor condition, and of any malfunction of the machine.

The operator may only operate the machine for the purpose intended by the manufacturer.

Only authorized and qualified operators may operate HAULOTTE® machines.

All operators must become familiar with and fully understand the emergency controls and how to operate the machine in an emergency as a component of their formal operator training.

The operator has the obligation stop using the machine in the event of malfunction or safety problems on the machine or in the work area and report the problem to his/her supervisor.

https://truckmanualshub.com/

5 - Inspection and maintenance

The inspection and maintenance table below, identifies the role and the responsibilities of each party in periodical machine maintenance..

If the machine is operated in a hostile environment or intensively, increase the frequency of maintenance.

Inspections and maintenance

Type of intervention	Frequency	Person-in-charge	Intervenor	Reference document
Pre-delivery inspection	Before each delivery of sold, hired or resold equipment	Owner (or hirer)	Qualified HAULOTTE Services® technician	Operator's manual
Pre-operation inspection	Before operation or when the operator changes	Operator	Operator	Operator's manual
Periodical preventive maintenance	At the specified intervals (250 hours or 1 year)	Owner (or hirer)	On-site technician or qualified HAULOTTE Services® technician	Maintenance book
Periodical visit	2 times a year or at the latest 6 months after the last periodic visit, and according to the local regulations	Owner (or hirer)	Organization or technician approved by the employer or by the intermediary of HAULOTTE Services® in accordance with the HAULOTTE Services® contract	Maintenance book

https://truckmanualshub.com/

1 - Identification

The manufacturers identification plate fixed on the chassis bears all pertinent information to identify the machine (Please see machine configuration).

For any request for information, intervention or spare parts, specify the type and serial number of the machine.

2 - Main components

COMPACT 10DX (COMPACT 2668RT) - COMPACT 12DX (COMPACT 3368RT) - Major Component Location Diagram

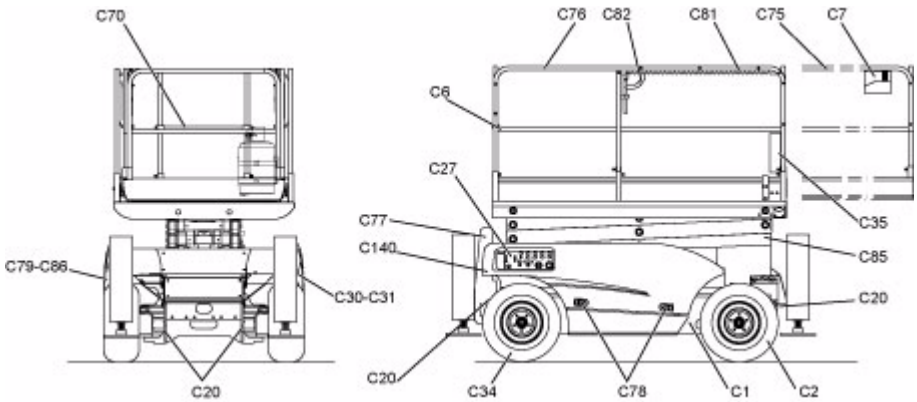

COMPACT 10DX (COMPACT 2668RT) - COMPACT 12DX (COMPACT 3368RT) - Description of the components

Marking	Description
C1	Chassis
C2	Front driven steering axle
C6	Platform
C7	Platform control box
C20	Anchorage point
C27	Ground control box
C30	Hydraulic oil tank
C31	Fuel tank
C31	Drive wheels
C35	Document holder
C70	Platform access bar
C75	Extension
C76	Guardrail
C77	Platform access ladder
C78	Hood locking catch
C79	Engine bay
C81	Sliding guardrail
C82	Doeck extension handle
C83	Stabiliser
C85	Scissors
C86	Internal combustion engine

https://truckmanualshub.com/

H12SX (HS3388RT) -H15SX (HS4388RT) -H18SX (HS5388RT) -H12SXL (HS3388RTXL) -H15SXL (HS4388RTXL) -H18SXL (HS5388RTXL) - Major Component Location Diagram

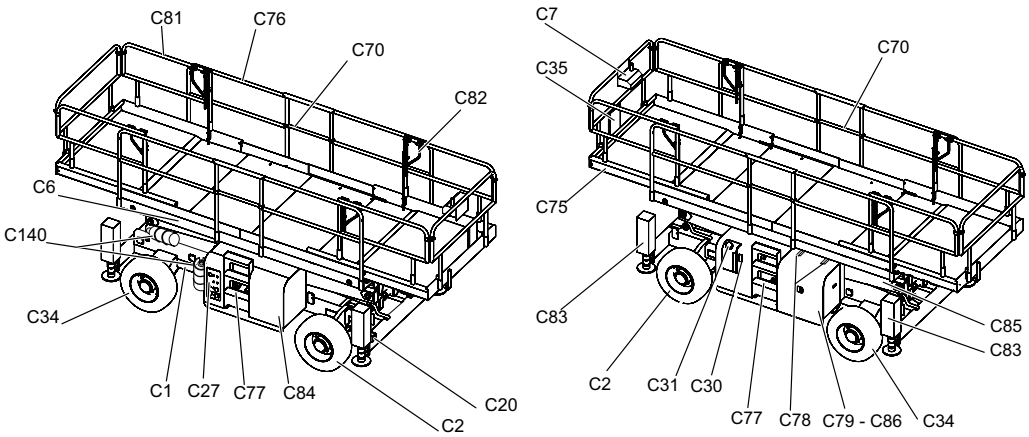

H12SX (HS3388RT) -H15SX (HS4388RT) -H18SX (HS5388RT) -H12SXL (HS3388RTXL) -H15SXL (HS4388RTXL) - H18SXL (HS5388RTXL) - Description of the components

Marking	Description
C1	Chassis
C2	Front driven steering axle
C6	Platform
C7	Platform control box
C20	Anchorage point
C27	Ground control box
C30	Hydraulic oil tank
C31	Fuel tank
C34	Drive wheels
C35	Document holder
C70	Platform access bar
C75	Extension
C76	Guardrail
C77	Platform access ladder
C78	Hood locking catch
C79	Engine bay
C81	Sliding guardrail
C81	Doeck extension handle
C83	Stabiliser
C84	Hydraulic circuit
C85	Scissors
C86	Internal combustion engine
C140	Gas bottles(1)

(1.) For US only

https://truckmanualshub.com/

3 - Safety devices

3.1 - SLIDING (OR SWINGING) INTERMEDIATE GUARDRAIL

The illustrations in this paragraph do not necessarily correspond to the range of products designated in the manual.

The platform is comprised of guardrails and a sliding mid-rail facilitating platform access.

Do not restrain the sliding midrail to the guard rail.

3.2 - ANCHORAGE POINT (PLEASE SEE MACHINE CONFIGURATION)

The illustrations in this paragraph do not necessarily correspond to the range of products designated in the manual.

The machine is equipped with harness anchorage points points which accept a single harness per anchorage point. The anchorage points are identified by the presence of the Anchorage point label.

If the local regulation imposes the wearing of a harness, use the approved anchorage points.

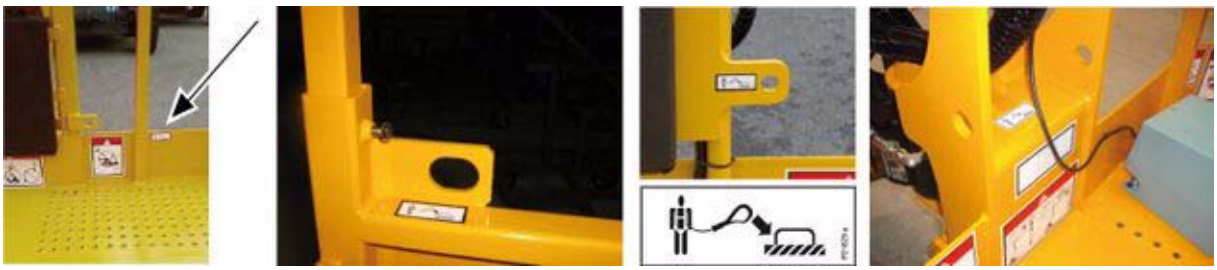

https://truckmanualshub.com/

3.3 - MAINTENANCE SUPPORT

The illustrations in this paragraph do not necessarily correspond to the range of products designated in the manual.

The maintenance support (on both sides of the machine) must be put in place before any maintenance operations.

3.4 - FOLDING GUARDRAILS - OPTION

Before using the machine, make sure that all the guardrails are fixed in the correct positions.

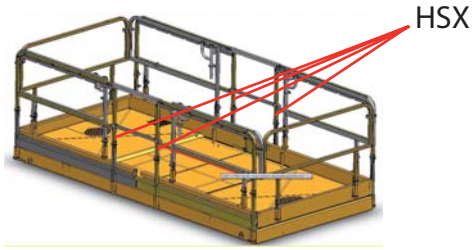

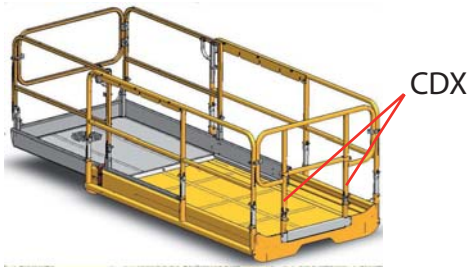

https://truckmanualshub.com/

4 - Labels

4.1 - CLASSIFICATION PLAN

4.1.1 - Red labels

The red labels indicate a potentially fatal danger.

Common labels

R3

R5

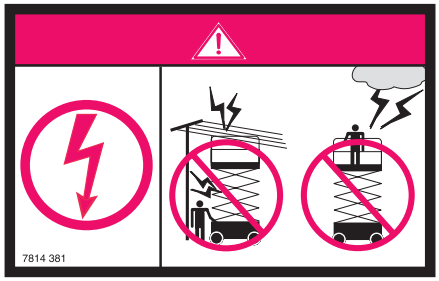

R6

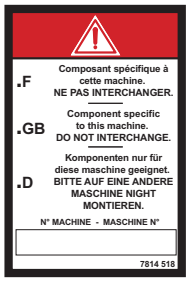

R7

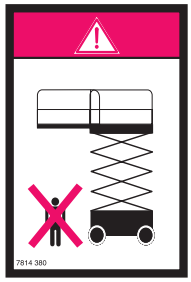

R2

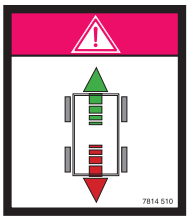

R13

R26 - HSX(L)

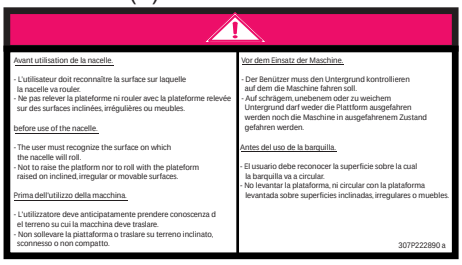

R4

Specific labels COMPACT 10DX (COMPACT 2668RT)

R1

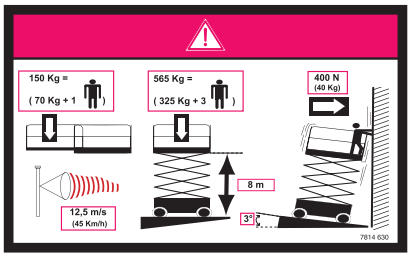

R8

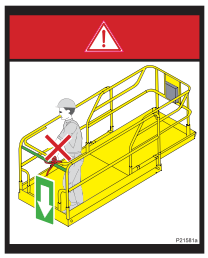

R9

R10

Specific labels COMPACT 12DX (COMPACT 3368RT)

R1

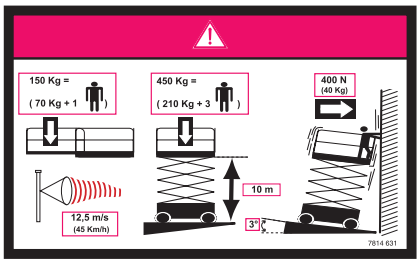

R8

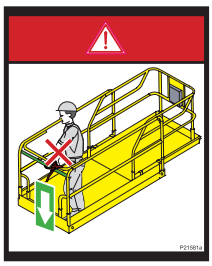

R9

R10

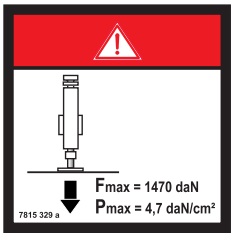

https://truckmanualshub.com/

Specific labels H12SX (HS3388RT)

R1

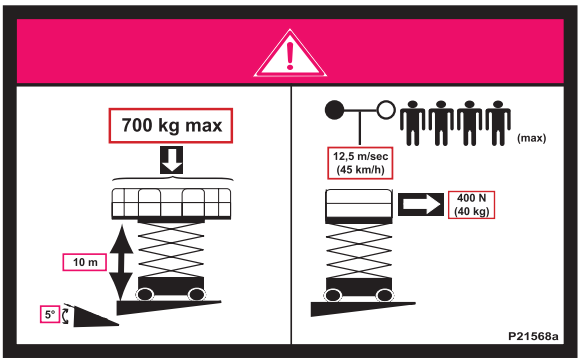

R9

R10

Specific labels H15SX (HS4388RT)

R1

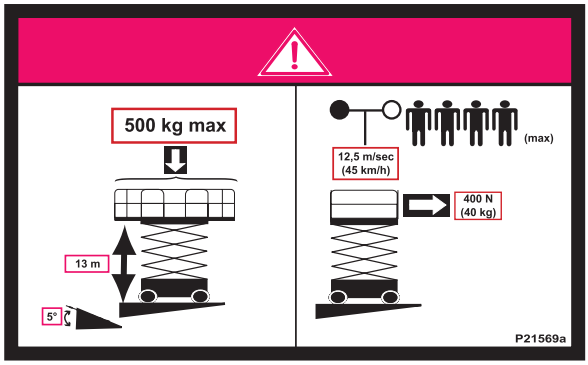

R9

R10

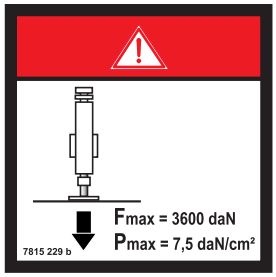

Specific labels H18SX (HS5388RT)

R1

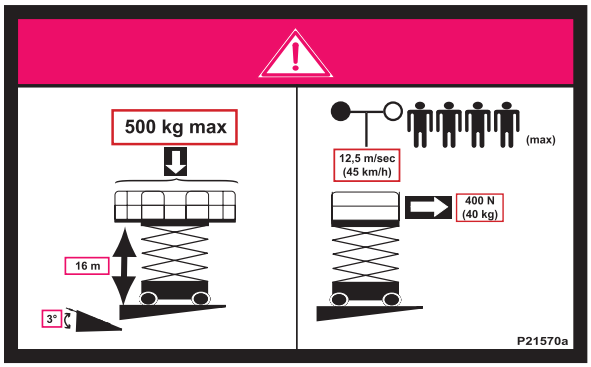

R9

R10

https://truckmanualshub.com/

Specific labels H12SXL (HS3388RTXL)

R1

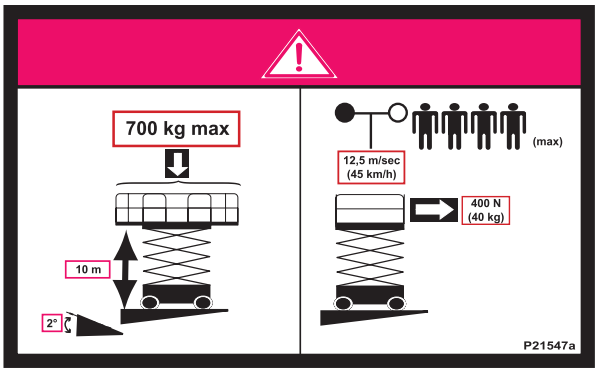

R9

R10

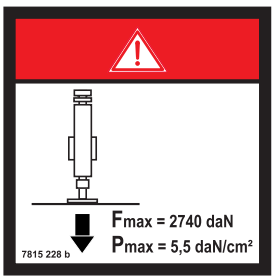

Specific labels H15SXL (HS4388RTXL)

R1

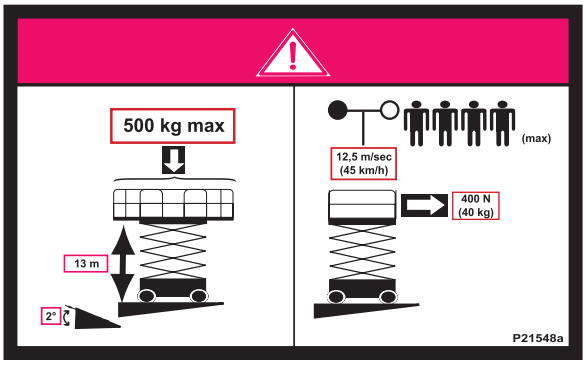

R9

R10

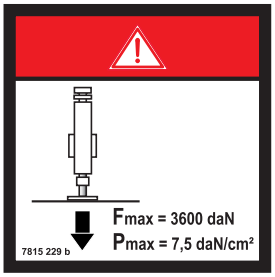

Specific labels H18SXL (HS5388RTXL)

R1

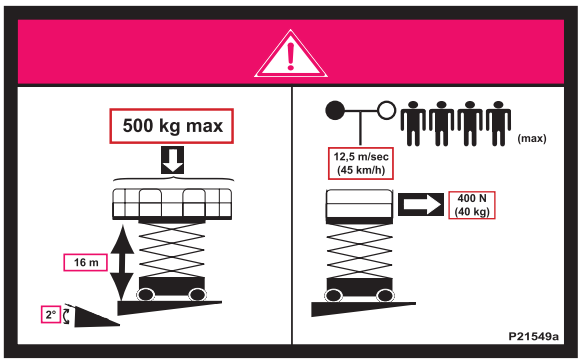

R9

R10

https://truckmanualshub.com/

4.1.2 - Orange labels

The orange labels indicate a risk of serious injury.

Common labels - CE

O1

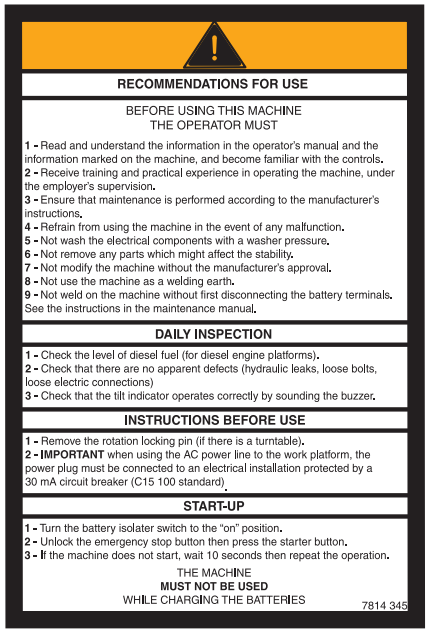

RECOMMENDATIONS FOR USE

BEFORE USING THIS MACHINE
THE OPERATOR MUST

1 - Read and understand the information in the operator's manual and the information marked on the machine, and become familiar with the controls.
2 - Receive training and practical experience in operating the machine, under the employer's supervision.
3 - Ensure that maintenance is performed according to the manufacturer's instructions.
4 - Refrain from using the machine in the event of any malfunction.
5 - Not wash the electrical components with a washer pressure.
6 - Not remove any parts which might affect the stability.
7 - Not modify the machine without the manufacturer's approval.
8 - Not use the machine as a welding earth.
9 - Not weld on the machine without first disconnecting the battery terminals. See the instructions in the maintenance manual.

DAILY INSPECTION

1 - Check the level of diesel fuel (for diesel engine platforms).
2 - Check that there are no apparent defects (hydraulic leaks, loose bolts, loose electric connections)
3 - Check that the tilt indicator operates correctly by sounding the buzzer.

INSTRUCTIONS BEFORE USE

1 - Remove the rotation locking pin (if there is a turntable).
2 - IMPORTANT when using the AC power line to the work platform, the power plug must be connected to an electrical installation protected by a 30 mA circuit breaker (C15 100 standard).

START-UP

1 - Turn the battery isolater switch to the "on" position.
2 - Unlock the emergency stop button then press the starter button.
3 - If the machine does not start, wait 10 seconds then repeat the operation.

THE MACHINE
MUST NOT BE USED
WHILE CHARGING THE BATTERIES

7814 345

Common labels - AS

O1

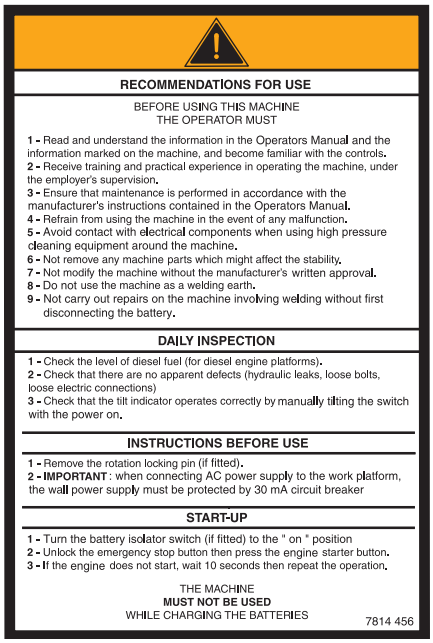

RECOMMENDATIONS FOR USE

BEFORE USING THIS MACHINE
THE OPERATOR MUST

1 - Read and understand the information in the Operators Manual and the information marked on the machine, and become familiar with the controls.
2 - Receive training and practical experience in operating the machine, under the employer's supervision.
3 - Ensure that maintenance is performed in accordance with the manufacturer's instructions contained in the Operators Manual.
4 - Refrain from using the machine in the event of any malfunction.
5 - Avoid contact with electrical components when using high pressure cleaning equipment around the machine.
6 - Not remove any machine parts which might affect the stability.
7 - Not modify the machine without the manufacturer's written approval.
8 - Do not use the machine as a welding earth.
9 - Not carry out repairs on the machine involving welding without first disconnecting the battery.

DAILY INSPECTION

1 - Check the level of diesel fuel (for diesel engine platforms).
2 - Check that there are no apparent defects (hydraulic leaks, loose bolts, loose electric connections)
3 - Check that the tilt indicator operates correctly by manually tilting the switch with the power on.

INSTRUCTIONS BEFORE USE

1 - Remove the rotation locking pin (if fitted).
2 - IMPORTANT : when connecting AC power supply to the work platform, the wall power supply must be protected by 30 mA circuit breaker

START-UP

1 - Turn the battery isolator switch (if fitted) to the " on " position
2 - Unlock the emergency stop button then press the engine starter button.
3 - If the engine does not start, wait 10 seconds then repeat the operation.

THE MACHINE
MUST NOT BE USED
WHILE CHARGING THE BATTERIES

7814 456

https://truckmanualshub.com/

Common labels - ANSI - CSA

O1

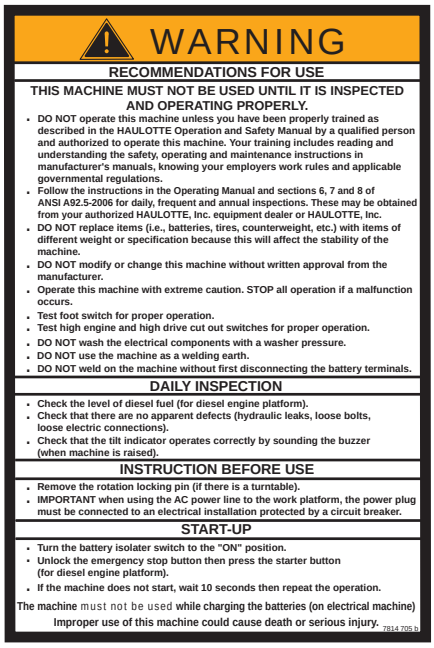

WARNING

RECOMMENDATIONS FOR USE

THIS MACHINE MUST NOT BE USED UNTIL IT IS INSPECTED AND OPERATING PROPERLY.

- DO NOT operate this machine unless you have been properly trained as described in the HAULOTTE Operation and Safety Manual by a qualified person and authorized to operate this machine. Your training includes reading and understanding the safety, operating and maintenance instructions in manufacturer's manuals, knowing your employers work rules and applicable governmental regulations.
- Follow the instructions in the Operating Manual and sections 6, 7 and 8 of ANSI A92.5-2006 for daily, frequent and annual inspections. These may be obtained from your authorized HAULOTTE, Inc. equipment dealer or HAULOTTE, Inc.
- DO NOT replace items (i.e., batteries, tires, counterweight, etc.) with items of different weight or specification because this will affect the stability of the machine.
- DO NOT modify or change this machine without written approval from the manufacturer.
- Operate this machine with extreme caution. STOP all operation if a malfunction occurs.
- Test foot switch for proper operation.
- Test high engine and high drive cut out switches for proper operation.
- DO NOT wash the electrical components with a washer pressure.
- DO NOT use the machine as a welding earth.
- DO NOT weld on the machine without first disconnecting the battery terminals.

DAILY INSPECTION

- Check the level of diesel fuel (for diesel engine platform).
- Check that there are no apparent defects (hydraulic leaks, loose bolts, loose electric connections).
- Check that the tilt indicator operates correctly by sounding the buzzer (when machine is raised).

INSTRUCTION BEFORE USE

- Remove the rotation locking pin (if there is a turntable).
- IMPORTANT when using the AC power line to the work platform, the power plug must be connected to an electrical installation protected by a circuit breaker.

START-UP

- Turn the battery isolater switch to the "ON" position.
- Unlock the emergency stop button then press the starter button (for diesel engine platform).
- If the machine does not start, wait 10 seconds then repeat the operation.

The machine must not be used while charging the batteries (on electrical machine)

Improper use of this machine could cause death or serious injury. 7814 705 b

https://truckmanualshub.com/

4.1.3 - Yellow labels

The yellow labels indicate a risk of material damage and/or minor injury.

Common labels

J3

J4

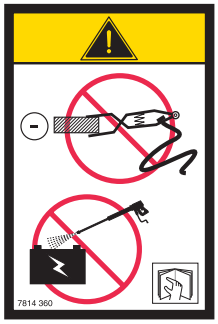

J6

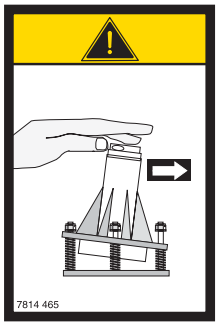

J9

J10

J12

J32

Specific COMPACT 10DX (COMPACT 2668RT) and COMPACT 12DX (COMPACT 3368RT) labels

J5

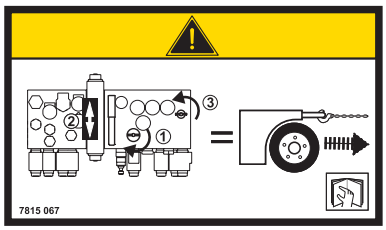

J16

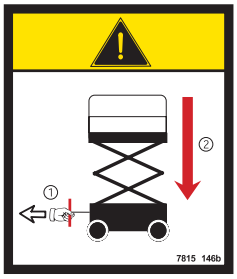

https://truckmanualshub.com/

Specific H12SX (HS3388RT) , H15SX (HS4388RT) , H12SXL (H3388RTXL) and H15SXL (HS4388RTXL) labels

J5

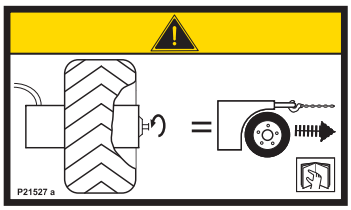

J16

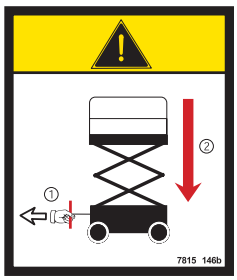

Specific H18SX (HS5388RT) and H18SXL (HS5388RTXL) labels

J5

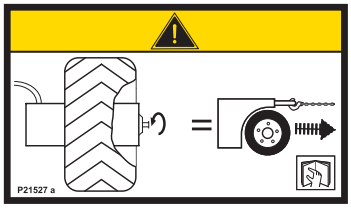

https://truckmanualshub.com/

4.1.4 - Other labels

The other labels provide additional technical information.

Common labels

A5

A16

A4

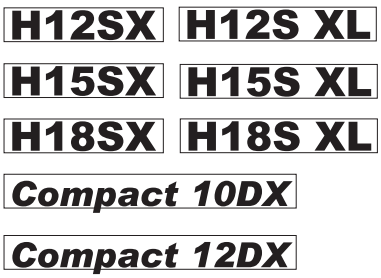

A8

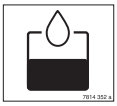

A9

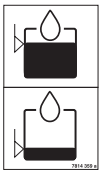

A24

A89

A90

A80

A10

A10

A10

A7

A15

Specific labels AS

R14

R17

J10

R23

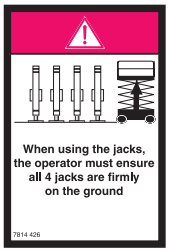

R24

A28

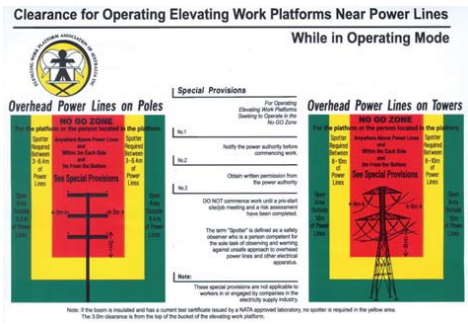

R54

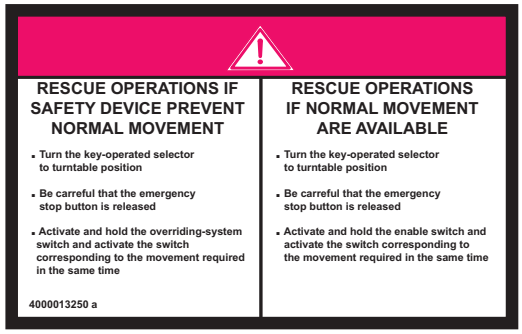

https://truckmanualshub.com/

Specific labels ANSI : Diesel version

R21

J13

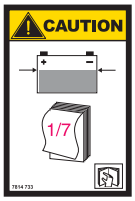

A25

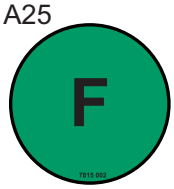

A22

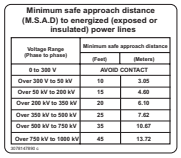

Minimum safe approach distance (M.S.A.D) to energized (exposed or insulated) power lines

Voltage Range (Phase to phase)	Minimum safe approach distance	
	(Feet)	(Meters)
0 to 300 V	AVOID CONTACT	
Over 300 V to 50 kV	10	3.05
Over 50 kV to 200 kV	15	4.60
Over 200 kV to 350 kV	20	6.10
Over 350 kV to 500 kV	25	7.62
Over 500 kV to 750 kV	35	10.67
Over 750 kV to 1000 kV	45	13.72

R23

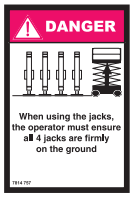

R24

A27

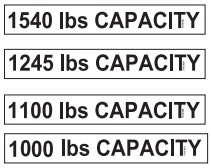

O3

Specific labels, optional

A8

R18 - HSX(L)

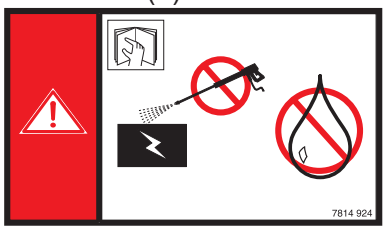

A31 - HSX(L)

4.1.5 - Green labels

Green labels indicate maintenance, operations or information (CSA standard).

Common labels

V2

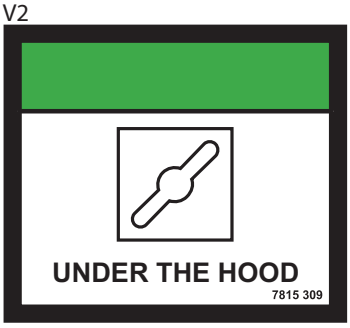

V1

4.1.6 - Blue labels

***N.B.**-:-The blue labels indicate information or a precaution to be taken in case of danger.*

https://truckmanualshub.com/

4.2 - IDENTIFICATION

Location of the Compact DX labels - Standards CE and AS

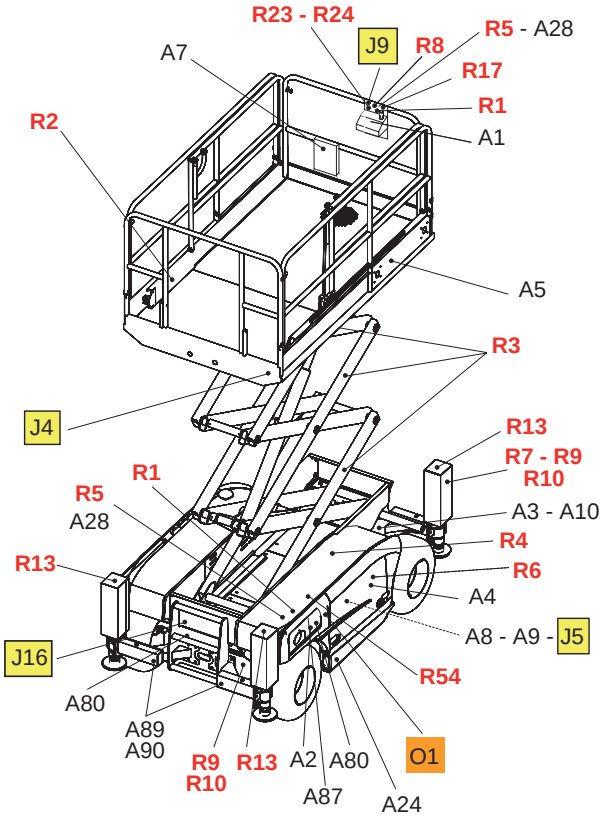

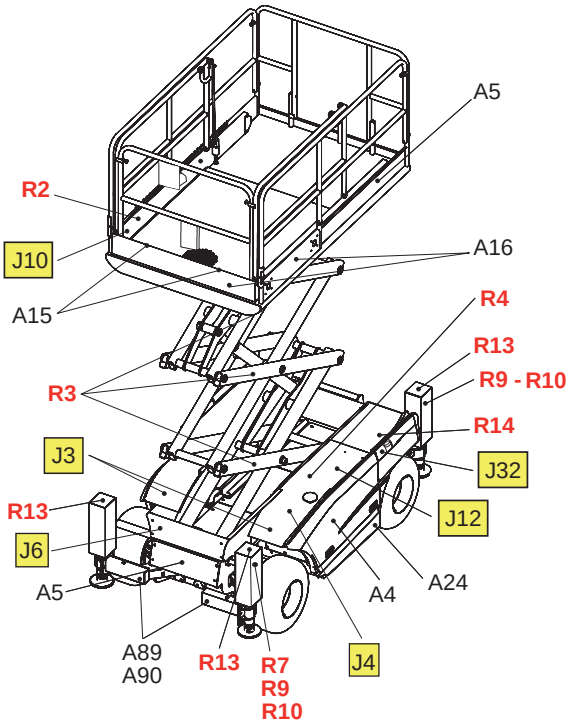

Location of HSX and HSXL labels - Standards CE and AS

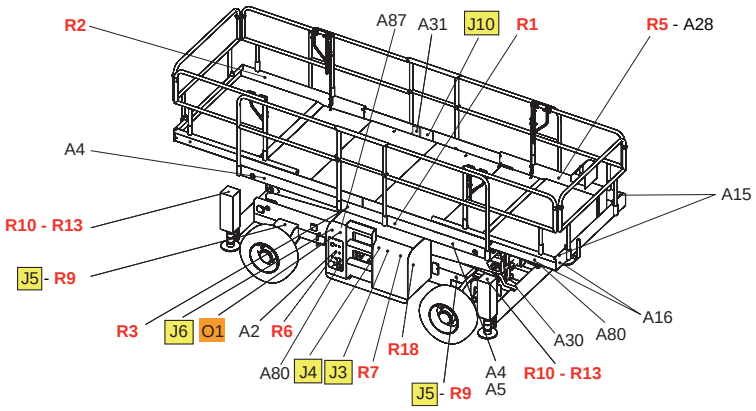

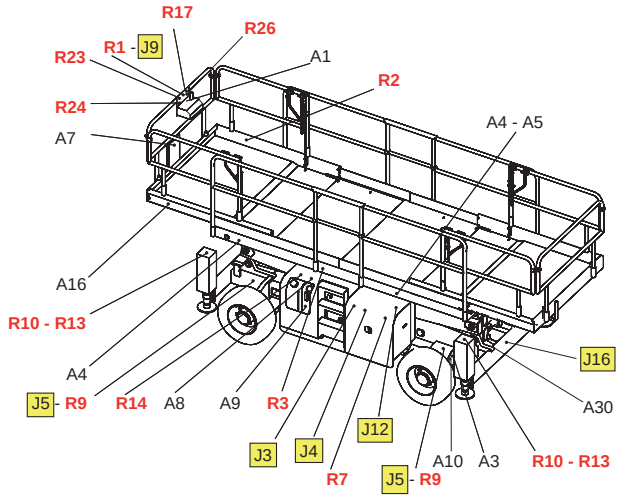

https://truckmanualshub.com/

Label descriptions - Standards CE and AS

Color	Marking	Description	Quantity	
Red	R1	Height of the floor and load	2	For Compact 10DX (Compact 2668RT) : 3078146300 For Compact 12DX (Compact 3368RT) : 3078146310 For H12SX (HS3388RT) : 307P215680 For H12SXL (HS3388RTXL) : 307P215470 For H15SX (HS4388RT) : 307P215690 For H15SXL (HS4388RTXL) : 307P215480 For H18SX (HS5388RT) : 307P215700 For H18SXL (HS5388RTXL) : 307P215490
Red	R2	Travel direction	2	3078145100
Red	R3	Risk of crushed hands	6	3078149010
Red	R4	Risk of body crushing	2	For Compact DX (Compact RT) only : 3078143630
Red	R5	Danger of electrocution	2	For CE standard only : 3078143810
Red	R6	Do not interchange	1	3078145180
Red	R7	Do not park in the work area	2	3078143800
Red	R8	Close the sliding mid-rail	1	For Compact 10DX (Compact 2668RT) and Compact 12DX (Compact 3368RT) : 307P215810
Red	R9	Wheel load	4	For Compact 10DX (Compact 2668RT) : 4000012870 For Compact 12DX (Compact 3368RT) : 4000012880 For H12SX (HS3388RT) : 30781152250 For H12SXL (HS3388RTXL) : 307P215440 For H15SX (HS4388RT) : 3078152260 For H15SXL (HS4388RTXL) : 307P215450 For H18SX (HS5388RT) : 3078152270 For H18SXL (HS5388RTXL) : 307P215460
Red	R10	Maximum effort on the stabilizers	4	For Compact 10DX (Compact 2668RT) : 3078153280 For Compact 12DX (Compact 3368RT) : 3078153290 For H12SX (HS3388RT) and H12SXL (HS3388RTXL) : 3078152280 For H15SX (HS4388RT) and H15SXL (HS4388RTXL) : 3078152290 For H18SX (HS5388RT) and H18SXL (HS5388RTXL) : 3078152300
Red	R13	Risk of crushed feet	4	3078144670
Red	R14	Fuel filling-up	1	For AS standard only : 3078144510

https://truckmanualshub.com/

Color	Marking	Description	Quantity	
Red	R17	Do not travel down slopes at high speed	1	For AS standard only : 3078144360
Red	R18	On-board generator	1	For HSX(L) (HSRT(XL)) only : 3078149240
Red	R23	Use of stabilizers	1	For AS standard only : 3078144260
Red	R24	The cylinders must be retracted	1	For AS standard only : 3078144280
Red	R26	Operating zone inspection before platform use	1	For HSXL (HSRTXL) only : 307P222440
Red	R54	Emergency operation(s)	1	For AS standard only-Compact DX (Compact RT) : 4000013250
Orange	O1	Operation instructions	1	In french (CE standard) : 3078143420 In english (CE standard) : 3078143450 In english (AS standard) : 3078144560 In spanish (CE standard) : 3078143430 In german (CE standard) : 3078143440 In italian (CE standard) : 3078143460 In danish (CE standard) : 3078144940 In portuguese (CE standard) : 3078145830 In finish (CE standard) : 3078145540 In swidish (CE standard) : 3078145940 In dutch (CE standard) : 3078143470
Yellow	J3	Do not place your foot on the cover	2	3078143640
Yellow	J4	Do not use the machine as a welding earth	2	3078143600
Yellow	J5	Brake release	Compact DX : 2 HSX(L) : 4	For Compact DX (Compact RT) : 3078150670 For HSX(L) (HSRT(XL)) : 307P215270
Yellow	J6	Verification of tilt operation	1	3078144650

https://truckmanualshub.com/

Color	Marking	Description	Quantity	
Yellow	J9	Stop time during descent	1	In french (CE standard) : 307P216120 In english (CE standard) : 307P216130 In spanish (CE standard) : 307P216150 In german (CE standard) : 307P216140 In italian (CE standard) : 307P216160 In danish (CE standard) : 307P216180 In portuguese (CE standard) : 307P216200 In finish (CE standard) : 307P216190 In swidish (CE standard) : 307P216210 In dutch (CE standard) : 307P216170
Yellow	J10	Socket	1	CE standard : 3078143540 AS standard : 3078144570
Yellow	J12	Heat burns	1	3078144970
Yellow	J16	Emergency lowering	1	3078151460
Yellow	J32	Low sulfur	1	307P232480
Other	A1-1	Platform control box	1	For Compact DX (Compact RT) : 307P232410-420 For HSX(L) (HSRT(XL)) : 307P217260
Other	A1-2	Emergency stop button	1	307P217830
Other	A2	Ground control box	1	For Compact DX (Compact RT) only : 307P232470
Other	A2	Ground control box (Internal combustion engine HATZ)	1	For HSX(L) (HSRT(XL) only : 307P217490
Other	A2	Ground control box (Internal combustion engine PERKINS)	1	For HSX(L) (HSRT(XL) only : 307P222990
Other	A3	Identification plate	1	307P218070
Other	A4	Machine name logo	2	For Compact 10DX (Compact 2668RT) : 3078146360 For Compact 12DX (Compact 3368RT) : 3078146370 For H12SX (HS3388RT) : 3078150610 For H12SXL (HS3388RTXL) : 307P215500 For H15SX (HS4388RT) : 3078150620 For H15SXL (HS4388RTXL) : 307P215510 For H18SX (HS5388RT) : 3078150630 For H18SXL (HS5388RTXL) : 307P215520
Other	A5	Small format HAULOTTE® logo	Compact DX : 3 HSX(L) : 2	307P217230
Other	A7	Read the operation manual	1	3078143680
Other	A8	Hydraulic oil	1	3078143520
Other	A8	Biodegradable oil	1	3078148890

https://truckmanualshub.com/

Color	Marking	Description	Quantity	
Other	A9	Upper and lower oil level	1	3078143590
Other	A10	Noise emission level	1	For Compact DX (Compact RT) only : 4000012860
Other	A10	Noise emission level (Internal combustion engine HATZ)	1	For HSX(L) (HSRT(XL) only : 3078148700
Other	A10	Noise emission level (Internal combustion engine PERKINS)	1	For HSX(L) (HSRT(XL) only : 307P223640
Other	A15	Harness anchor point location	6	307P216290
Other	A16	Yellow and black adhesive tape	1	2421808660
Other	A24	4WD	2	For Compact DX (Compact RT) only : 3078146330
Other	A28	Danger of electrocution	2	For AS standard only : 307P226440
Other	A31	On-board generator selector	1	For HSX(L) (HSRT(XL) only : 3078150500
Other	A80	Emergency lowering location	2	307P226580
Other	A87	Emergency control panel	1	For Italy only : 307P232500
Other	A89	Towing points on the machine	4	3078147930
Other	A90	Anchor points on the machine	4	307P216800

https://truckmanualshub.com/

Location of the Compact RT labels - Diesel version - Standards ANSI and CSA

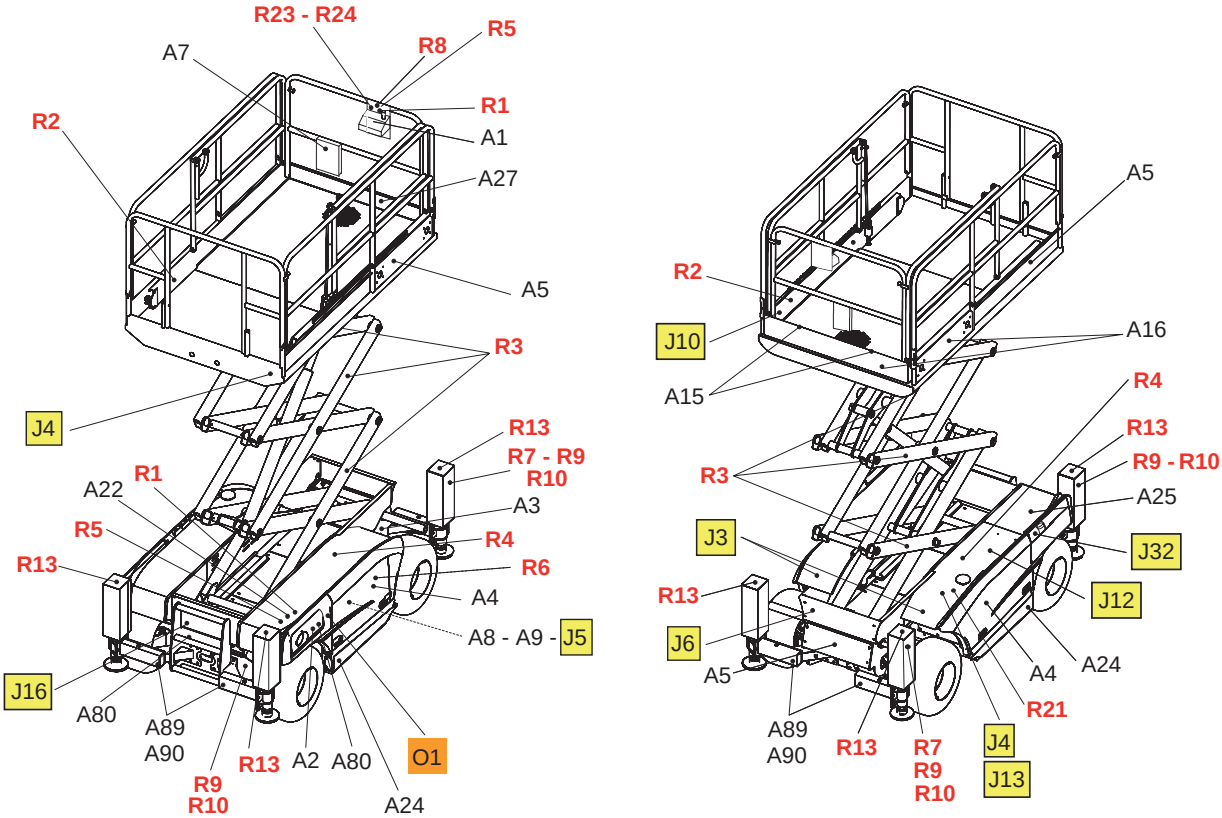

Location of HSRT and HSRTXL labels - Diesel version - Standards ANSI and CSA

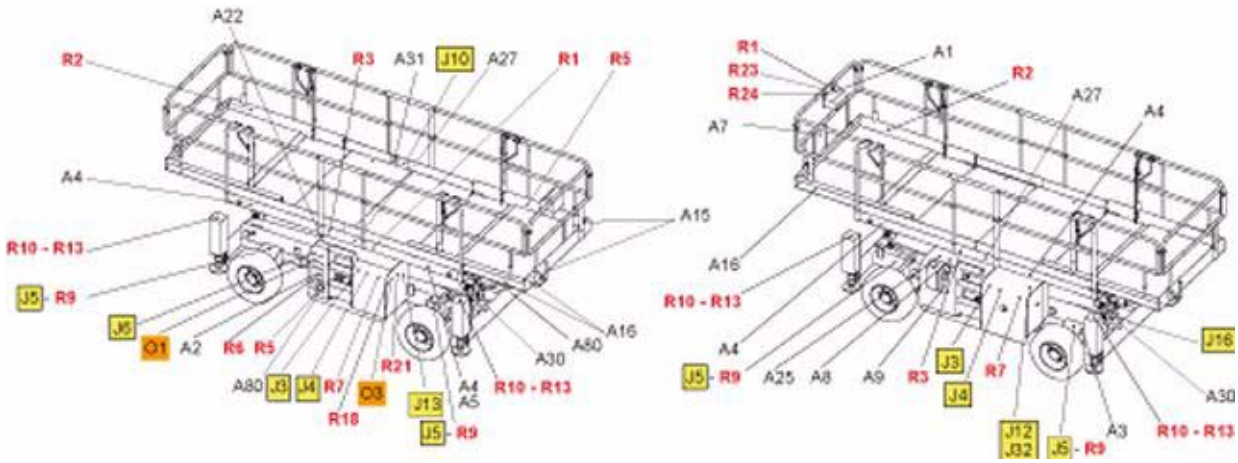

https://truckmanualshub.com/

Label descriptions - Diesel version - Standards ANSI and CSA

Color	Marking	Description	Quantity	
Red	R1	Height of the floor and load	2	For Compact 10DX (Compact 2668RT) : 3078148520 For Compact 12DX (Compact 3368RT) : 3078148530 For H12SX (HS33388RT) and H12SXL (HS3388RTXL) : 3078147530 For H15SX (HS4388RT) and H15SXL (HS4388RTXL) : 3078147560 For H18SX (HS5388RT) and H18SXL (HS5388RTXL) : 3078147510
Red	R2	Travel direction	2	3078147280
Red	R3	Risk of crushed hands	6	3078147240
Red	R4	Risk of body crushing	2	For Compact DX (Compact RT) only : 3078143630
Red	R5	Danger of electrocution	2	3078147400
Red	R6	Do not interchange	1	3078147320
Red	R7	Do not park in the work area	2	3078147380
Red	R8	Close the sliding mid-rail	1	For Compact 10DX (Compact 2668RT) and Compact 12DX (Compact 3368RT) : 307P215820
Red	R9	Wheel load	4	For Compact 10DX (Compact 2668RT) : 4000012910 For Compact 12DX (Compact 3368RT) : 4000012930 For H12SX (HS3388RT) : 307P217660 For H12SXL (HS3388RTXL) : 307P217690 For H15SX (HS4388RT) : 307P217670 For H15SXL (HS4388RTXL) : 307P217700 For H18SX (HS5388RT) : 307P217680 For H18SXL (HS5388RTXL) : 307P217710
Red	R10	Maximum effort on the stabilizers	4	For Compact 10DX (Compact 2668RT) : 307P217790 For Compact 12DX (Compact 3368RT) : 307P217800 For H12SX (HS33388RT) and H12SXL (HS3388RTXL) : 307P217720 For H15SX (HS4388RT) and H15SXL (HS4388RTXL) : 307P217730 For H18SX (HS5388RT) and H18SXL (HS5388RTXL) : 307P217740
Red	R13	Risk of crushed feet	4	3078147180
Red	R18	On-board generator	1	For HSX(L) (HSRT(XL) only : 307P203450
Red	R21	Protective clothing required	1	3078147350
Red	R23	Use of stabilizers	1	3078147570

https://truckmanualshub.com/

C - Machine layout

Color	Marking	Description	Quantity	
Red	R24	The cylinders must be retracted	1	3078147590
Orange	O1	Operation instructions	1	3078148040
Orange	O3	Risks of explosion	1	3078148030
Yellow	J3	Do not place your foot on the cover	2	3078147270
Yellow	J4	Do not use the machine as a welding earth	2	3078147220
Yellow	J5	Brake release	Compact DX : 2 HSX(L) : 4	For Compact DX (Compact RT) only : 3078150680 For HSX(L) (HSRT(XL) only : 307P217860
Yellow	J6	Verification of tilt operation	1	3078147090
Yellow	J10	Socket	1	3078148900
Yellow	J12	Heat burns	1	3078147600
Yellow	J13	Battery verification	1	3078147330
Yellow	J16	Emergency lowering	1	3078151480
Yellow	J32	Low sulfur	1	307P232480
Other	A1-1	Platform control box	1	For Compact DX (Compact RT) only : 307P232410-420 For HSX(L) (HSRT(XL) only : 307P217270
Other	A1-2	Emergency stop button	1	307P217830
Other	A2	Ground control box	1	For Compact DX (Compact RT) only : 307P232470 For HSX(L) (HSRT(XL) only : 307P217500
Other	A3	Identification plate	1	307P218170
Other	A4	Machine name logo	2	For Compact 10DX (Compact 2668RT) : 3078148490 For Compact 12DX (Compact 3368RT) : 3078148500 For H12SX (HS3388RT) : 3078147630 For H12SXL (HS3388RTXL) : 307P219260 For H15SX (HS4388RT) : 3078147620 For H15SXL (HS4388RTXL) : 307P219270 For H18SX (HS5388RT) : 3078147610 For H18SXL (HS5388RTXL) : 307P219280
Other	A5	Small format HAULOTTE® logo	Compact DX : 3 HSX(L) : 2	307P217230
Other	A7	Read the operation manual	1	3078147290
Other	A8	Hydraulic oil	1	3078147140
Other	A8	Biodegradable oil	1	3078148920
Other	A9	Upper and lower oil level	1	3078147210
Other	A15	Harness anchor point location	6	3078147950
Other	A16	Yellow and black adhesive tape	1	2421808660
Other	A22	Voltage table	1	3078147890
Other	A24	4WD	2	For Compact DX (Compact RT) only : 3078146330
Other	A25	Fuel tank cap	1	3078150020

https://truckmanualshub.com/

Color	Marking	Description	Quantity	
Other	A27	Permissible load	1	For Compact 10DX (Compact 2668RT) : 3078150090 For Compact 12DX (Compact 3368RT) : 3078150100 For H12SX(L) (HS3388RT(XL)) : 3078150070 For H15/18SX(L) (HS4388/5388RT(XL)) : 3078150080
Other	A31	On-board generator selector	1	For HSX(L) (HSRT(XL) only : 307P203440
Other	A80	Emergency lowering location	2	307P227210
Other	A89	Towing points on the machine	4	3078147930
Other	A90	Anchor points on the machine	4	307P216800

https://truckmanualshub.com/

Location of the H12SX - H15SX - H18SX labels - Russia and the Ukraine version

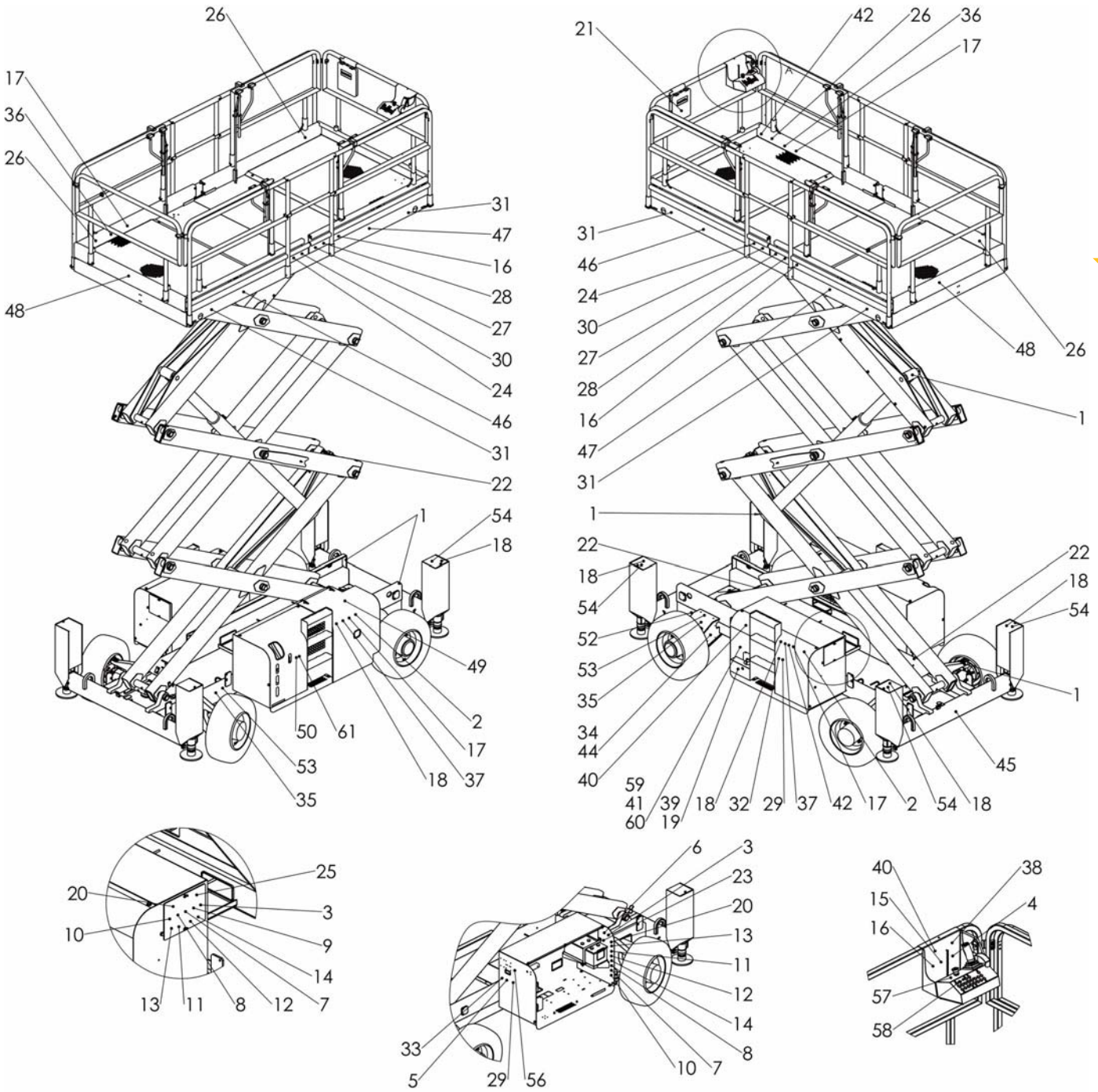

https://truckmanualshub.com/

Label descriptions H12SX - H15SX - H18SX - Russia and the Ukraine version

Color	Marking	Description	Quantity	
Red	1	Lubrication point	10	For H12SX (NA) : 307P219370 For H15SX (NA) : 307P219370
Red	1	Lubrication point	12	For H18SX (NA) : 307P219370
Blue	2	Operation instructions White background	1	For Russia : 307P225160 For Ukraine : 307P227850
Blue	3	Caution glasses	2	307P226670
Blue	4	Caution helmet compulsory	1	307P226680
Blue	5	Caution disconnection compulsory	1	307P226690
Blue	6	hand protection compulsory	1	307P226700
Red	7	Flames prohibited	2	307P226750
Red	8	Smoking forbidden	2	307P226760
Red	9	Forbidden entry	1	307P226770
Red	10	Forbidden to water	2	307P226780
Yellow	11	Battery danger	2	307P226790
Yellow	12	Fire Hazard	2	307P226800
Yellow	13	Electrical danger	2	307P226810
Yellow	14	Corrosion hazard	2	307P226830
Yellow	15	Danger unstable side	1	307P226930
Red	16	Sliding bar	3	307P226950
Red	17	Welding earth	4	307P226970
Red	18	do not put foot down	6	307P227010
Blue	19	Dumping	1	For Russia : 307P227060 For Ukraine : 307P227870
Blue	20	Battery maintenance	2	For Russia : 307P227180 For Ukraine : 307P227860
Blue	21	Read the operation manual	1	For Russia : 307P227190 For Ukraine : 307P227840
Other	22	Tamper-proof	3	For H12SX (NA) : 307P227450 For H15SX (NA) : 307P227450
Other	22	Tamper-proof	4	For H18SX (NA) : 307P227450
Blue	23	Caution glasses Ø 100	1	307P227460
Blue	24	Caution helmet compulsory Ø 100	2	307P227470
Blue	25	hand protection compulsory Ø 100	1	307P227490
Blue	26	Harness attachment compulsory Ø 100	1	307P227500
Blue	27	Obligatory routing Ø 100	2	307P227510
Red	28	Forbidden entry Ø 100	2	307P227560
Yellow	29	Electrical danger	2	307P227620
Yellow	30	Danger risk of crushed hands	2	307P227660
Yellow	31	Danger risk of crushed body	4	307P227670
Yellow	32	Danger unstable side	1	307P227680
Blue	33	Plug 12 V - Ø 100	1	307P227710
Other	34	Identification plate	1	For Russia : 307P227820 For Ukraine : 307P227830
Blue	35	Brake release	4	For Russia : 4000010880 For Ukraine : 4000011340
Blue	36	Travel direction	2	For Russia : 4000010890 For Ukraine : 4000011390
Red	37	Do not park Ø 100	2	4000010910
Blue	38	Arm lowering operation	1	For Russia : 4000011400 For Ukraine : 4000011430
Yellow	39	Tilt verification	1	4000011690

https://truckmanualshub.com/

C - Machine layout

Color	Marking	Description	Quantity	
Blue	40	Height of the floor and load	2	For H12SX (NA) : 4000011250 For H15SX (NA) : 4000011310 For H18SX (NA) : 4000011320
Blue	41	Buzzer	1	307P219400
Red	42	Danger of electrocution Ø 100	2	4000010920
Other	43	Hydraulic oil	1	3078143520
Other	44	Rivet	4	2421809130
Other	45	Emergency lowering	1	3078151460
Other	46	Label	2	For H12SX (NA) : 3078150610 For H15SX (NA) : 3078150620 For H18SX (NA) : 3078150630
Other	48	Yellow and black adhesive tape	1	2421808660
Red	49	Danger of Heat burns	1	3078144970
Other	50	Upper and lower oil level	1	3078143590
Red	51	Do not interchange	1	3078145180
Other	52	Noise emission level	1	3078148700
Red	53	Maximum effort on wheel	4	For H12SX (NA) : 3078152250 For H15SX (NA) : 3078152260 For H18SX (NA) : 3078152270
Red	54	Maximum effort on the stabilizers	4	For H12SX (NA) : 3078152280 For H15SX (NA) : 3078152300 For H18SX (NA) : 3078152290
Other	55	Warranty activation	1	2420505950
Blue	56	Plug 240 V 30 mA	1	307P227050
Other	57	Platform control box	1	307P217830
Other	58	Platform control box	1	307P217260
Other	59	Ground control box	1	For H12SX (NA) : 307P222990 For H15SX (NA) : 307P217490 For H18SX (NA) : 307P217490
Blue	60	Pre-heating	1	307P220300
Yellow	61	Cold weather oil	1	307P223700

https://truckmanualshub.com/

5 - Control boxes

***N.B.**-:-The functions are described for the entire range. Refer to the machine model to identify the controls and functions indicators.*

5.1 - GROUND CONTROL BOX - EMERGENCY CONTROL PANEL

General view-Compact 10/12DX (Compact 2668/3368RT)

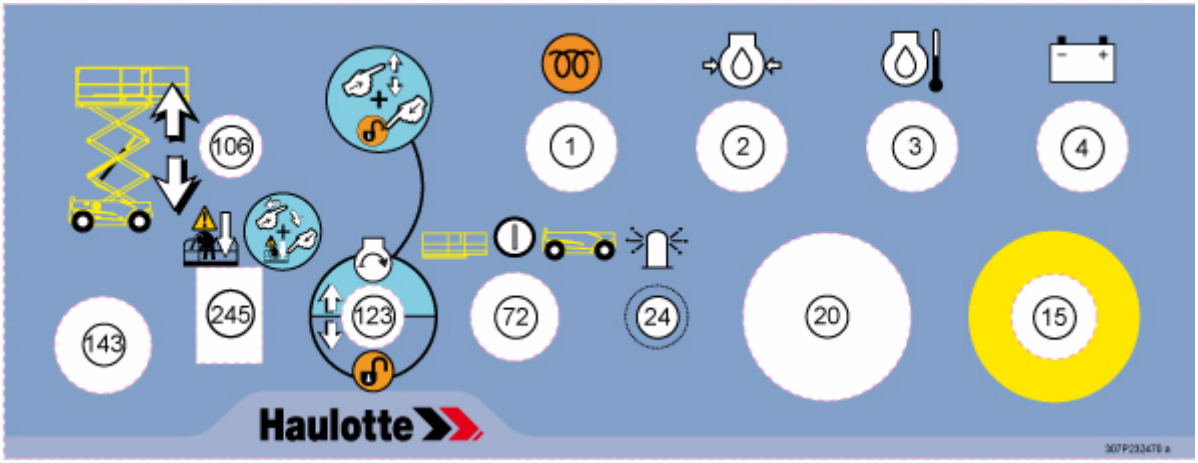

Controls and indicators-Compact 10/12DX (Compact 2668/3368RT)

Marking	Description	Function
1	Electric pre-heating indicator	On : Engine in pre-heating mode
		Off : Engine pre-heated, starting possible
2	Engine oil pressure light	Low engine oil pressure(1)
3	Engine temperature indicator	High engine oil temperature((1.))
4	Battery charge indicator	Low battery charge((1.))
15	Emergency stop button	Pulled out (activated) : Ground control box energized. The emergency stop push button on the upper console must be pulled (activated) to allow movements.
		Pushed down (deactivated) : The controls on the upper and lower consoles are disabled by switching off the power to the control part (solenoid valves and relays).
20	Hour meter	Total machine running hours
24	Beacon light on/off(2)	Move to the right : Beacon light on
		Move to the left : Beacon light off
72	Control box energizing key selector	Left : Platform control box energized
		Center : De-energizes control system
		Right : Ground control box energized
106	Platform elevation / lowering selector	Move upwards : Platform raises
		Move downwards : Lowering of platform
123	'Enable Switch' selector-Engine start-up selector	Push the selector upwards : Starting the engine
		Press down and hold : Associated command is validated
		Release : Associated command movement is halted
143	Control box start-up key	Right : Control box on
		Left : Control box off
245	"Overriding system" switch under sealed cover	Exceptional procedure for rescue lowering

(1.) Perform the required maintenance (see the machine maintenance book)
(2.) For machines fitted with

https://truckmanualshub.com/

Photo COMPACT 10D/12X (COMPACT 2668/3368RT)

https://truckmanualshub.com/

General view-H12/15/18SX(L) (HS3388/4388/5388RT(XL))

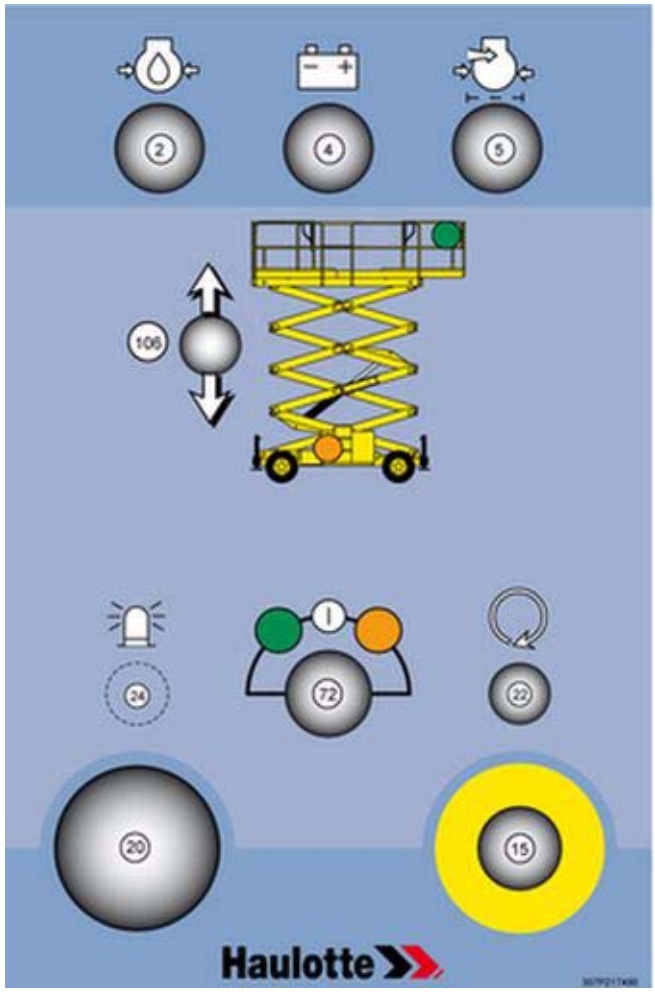

Controls and indicators-H12/15/18SX(L) (HS3388/4388/5388RT(XL))

Marking	Description	Function
2	Engine oil pressure light	Low engine oil pressure(1)
4	Battery charge indicator	Low battery charge((1.))
5	Air filter clogging indicator	Clogged air filter((1.))
15	Emergency stop button	Pulled out (activated) : Ground control box energized
		Pushed down (deactivated) : De-energizes control system
20	Hour meter	Total machine running hours
22	Engine start-up selector	Starting the engine
24	Beacon light on/off(2)	Move to the right : Beacon light on
		Move to the left : Beacon light off
72	Control box energizing key selector-Dead Man	Left : Platform control box energized
		Center : De-energizes control system
		Right : Ground control box energized
106	Platform elevation / lowering selector	Move upwards : Platform raises
		Move downwards : Lowering of platform

(1.) Perform the required maintenance (see the machine maintenance book)
(2.) For machines fitted with

https://truckmanualshub.com/

Photo H12/15/18SX(L) (HS3388/4388/5388RT(XL))

https://truckmanualshub.com/

5.2 - PLATFORM CONTROL BOX

General view-Compact 10/12DX (Compact 2668/3368RT)

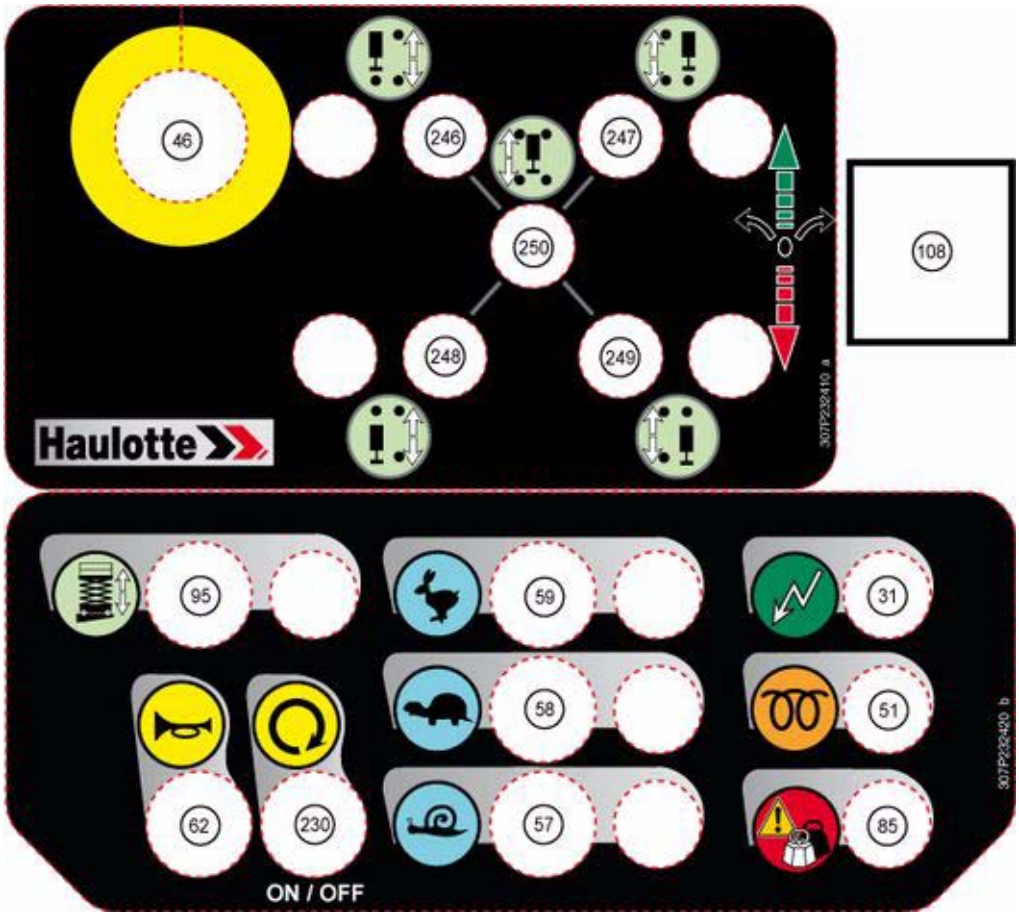

Controls and indicators-Compact 10/12DX (Compact 2668/3368RT)

Marking	Description	Function
31	Power ON indicator	On : Machine switched on
		Off : Machine switched off
46	Platform control box emergency stop button	Pulled out (activated) : Platform control box power supply energized. The emergency pushbutton on the lower console must be pulled (activated) to allow movements.
		Pushed down (deactivated) : The controls on the upper and lower consoles are disabled by switching off the power to the control part (solenoid valves and relays).
51	Electric pre-heating indicator	On : Engine in pre-heating mode
		Off : Engine pre-heated, starting possible
57	Low speed selector	Pressed down (activated and LED on) : Low-speed drive selection (for short distance and final approach)
58	Medium speed selector	Pressed down (activated and LED on) : Medium-drive speed selection (difficult ground, slope)
59	High speed selector	Pressed down (activated and LED on) : High-speed drive selection (for long distance)
62	Horn selector	Pressed down (activated) : Horn
85	Fault indicator-Platform overload indicator	Flashes in case of fault, overload, tilt

https://truckmanualshub.com/

Marking	Description	Function
95	Platform elevation / lowering selector	Pressed down (activated and LED on) : Platform elevation/ lowering selection
108	Movement joystick	Move forward : Forward drive or platform elevation
		Move backward : Reverse drive or platform lowering
230	Engine start-up selector	Start or stop the engine (depending on the machine's operating status) by pressing the push-button
246	Front left stabiliser extension/retraction selector	Push the selector downwards to extend the stabilizers : Stabilizer extended and LED on (continuously: stabilizer extended and set against the ground; rapid flashing: stabilizer extended but not yet set; slow flashing: stabilizer totally extended but not set) Push the selector upwards to raise the stabilizers : Stabilizer retraction and corresponding LED off during lowering
247	Front right stabiliser extension/ retraction selector	Push the selector downwards to extend the stabilizers : Stabilizer extended and LED on (continuously: stabilizer extended and set against the ground; rapid flashing: stabilizer extended but not yet set; slow flashing: stabilizer totally extended but not set) Push the selector upwards to raise the stabilizers : Stabilizer retraction and corresponding LED off during lowering
248	Rear left stabiliser extension/retraction selector	Push the selector downwards to extend the stabilizers : Stabilizer extended and LED on (continuously: stabilizer extended and set against the ground; rapid flashing: stabilizer extended but not yet set; slow flashing: stabilizer totally extended but not set) Push the selector upwards to raise the stabilizers : Stabilizer retraction and corresponding LED off during lowering
249	Rear right stabiliser extension/retraction	Push the selector downwards to extend the stabilizers : Stabilizer extended and LED on (continuously: stabilizer extended and set against the ground; rapid flashing: stabilizer extended but not yet set; slow flashing: stabilizer totally extended but not set) Push the selector upwards to raise the stabilizers : Stabilizer retraction and corresponding LED off during lowering
250	Centralised stabiliser extension/ retraction selector	Push the selector downwards to extend the stabilizers : Stabilisers extended and LED lit (continuously: stabilisers extended and braced against the ground; fast flashing: stabilisers extended but not yet braced; slow flashing: stabilisers fully extended by not braced) Push the selector upwards to raise the stabilizers : Stabiliser retraction and corresponding LED off when lowering

https://truckmanualshub.com/

Photo Compact 10/12DX (Compact 2668/3368RT)

https://truckmanualshub.com/

General view-H12/15/18SX(L) (HS3388/4388/5388RT(XL))

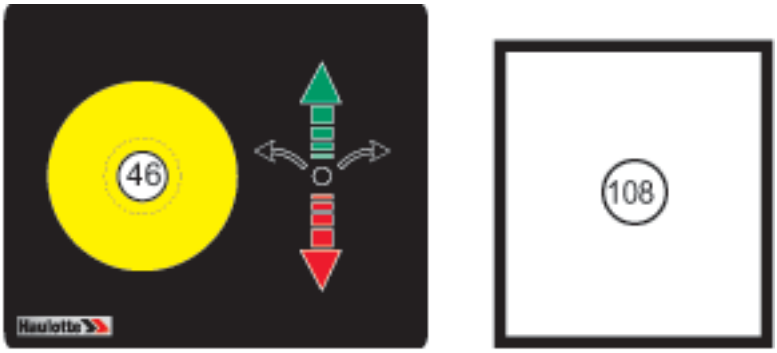

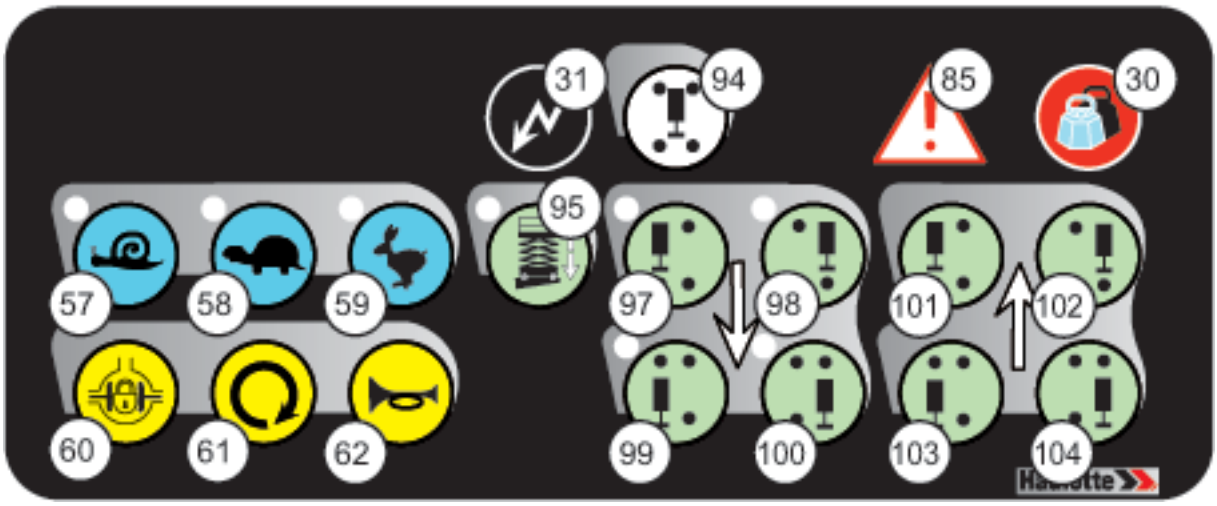

Controls and indicators-H12/15/18SX(L) (HS3388/4388/5388RT(XL))

Marking	Description	Function
30	Platform overload indicator	Platform overload
31	Power ON indicator	On : Machine switched on
		Off : Machine switched off
46	Emergency stop button	Pulled out (activated) : Ground control box energized
		Pushed down (deactivated) : De-energizes control system
57	Low-speed drive selector switch with indicator light	Pressed down (activated and LED on) : Low-speed drive selection (for short distance and final approach)
58	Medium-drive speed selector switch and indicator	Pressed down (activated and LED on) : Medium-drive speed selection (difficult ground, slope)
59	High-speed drive selector switch with indicator light	Pressed down (activated and LED on) : High-speed drive selection (for long distance)
60	Differential lock selector switch	Pressed down (activated) : Differential blocking selection
61	Engine start-up selector	Pressed down (activated) : Starting the engine
62	Horn selector switch	Pressed down (activated) : Horn
85	Fault indicator	Flashing if fault and/or tilt
94	Centralized outriggers selector switch	Pressed down (activated) : Automatic stabilizer lowering until the machine is stabilized
95	Platform elevation/lowering selector switch and indicator	Pressed down (activated and LED on) : Platform elevation/ lowering selection
97	Front left stabilizer extension selector switch and indicator	Pressed down (activated) : Stabilizer extended and LED on (continuously: stabilizer extended and set against the ground; rapid flashing: stabilizer extended but not yet set; slow flashing: stabilizer totally extended but not set)

https://truckmanualshub.com/

Marking	Description	Function
98	Front right stabilizer extension selector switch and indicator	Pressed down (activated) : Stabilizer extended and LED on (continuously: stabilizer extended and set against the ground; rapid flashing: stabilizer extended but not yet set; slow flashing: stabilizer totally extended but not set)
99	Rear left stabilizer extension selector switch and indicator	Pressed down (activated) : Stabilizer extended and LED on (continuously: stabilizer extended and set against the ground; rapid flashing: stabilizer extended but not yet set; slow flashing: stabilizer totally extended but not set)
100	Rear right stabilizer extension selector switch and indicator	Pressed down (activated) : Stabilizer extended and LED on (continuously: stabilizer extended and set against the ground; rapid flashing: stabilizer extended but not yet set; slow flashing: stabilizer totally extended but not set)
101	Front left stabilizer retraction selector switch	Pressed down (activated) : Stabilizer retraction and corresponding LED off during lowering 97
102	Front right stabilizer retraction selector switch	Pressed down (activated) : Stabilizer retraction and corresponding LED off during lowering 98
103	Rear left stabilizer retraction selector switch	Pressed down (activated) : Stabilizer retraction and corresponding LED off during lowering 99
104	Rear right stabilizer retraction selector switch	Pressed down (activated) : Stabilizer retraction and corresponding LED off during lowering 100
108	Movement joystick	Move forward : Forward drive or platform elevation
		Move backward : Reverse drive or platform lowering
	Front axle steering selector	Press right side of button : Right-hand steering
		Press left side of button : Left-hand steering

Photo

https://truckmanualshub.com/

1 - Description

Hydraulic energy to perform machine movements is provided by two pumps powered by a thermal engine.

The controls and the starting of the thermal engine are powered by battery.

To protect the user and the machine, safety systems prevent the operation of the machine beyond its capacities. Section G Technical characteristics

These security systems if activated, immobilize the machine and neutralize the movements.

Poor knowledge of the characteristics and operation of the machine can lead the operator to think that a normal safety operation is a malfunction.

2 - Safety devices

2.1 - ACTIVATION OF CONTROLS

The controls must be validated by a 'Enable Switch' system to activate the different movements.

The 'Enable Switch' system depends on the machine configuration and will consist of one of the following :

- Joystick handle.
- Pedal.
- Validation button.

2.2 - PLATEFORM LIFTING

For Russia and the Ukraine only :

Platform lifting is only authorised if the 4 stabilisers are braced against the ground.

https://truckmanualshub.com/

2.3 - DRIVE SPEED

All driving speeds are authorised when the machine is folded, (machine in transport position).

The maximum travelling speeds are reduced when the following lifting height is reached :

Machine	Transport configuration limit height	
	Mètre	Feet
H12/15/18SX(L) (HS3388/4388/5388RT(XL))	2,80 - 2,90	9 ft 2 in - 9 ft 6 in
COMPACT 10/12DX (COMPACT 2668/3368RT)	2,50 - 2,70	8 ft 2 in - 8 ft 10 in

Above these values, only micro-speed is authorized :

- Driving is only possible if machine outriggers is raised.
- Driving is cut off if the tilt exceeds the authorized limit.
- For Compact 12DX (Compact 3368RT) only : As soon as the base reaches 8 m(26 ft3 in) from the ground, driving movements are cut off.
- For H15/18SX (HS4388/5388RT) only : As soon as the base reaches 10 m(32 ft10 in) from the ground, driving movements are cut off.

For Russia and the Ukraine only :

- All driving speeds are authorised when the machine is folded, (machine in transport position).
- Driving is cut off if the tilt exceeds the authorized limit.

2.4 - ON-BOARD ELECTRONICS

The machines are equipped with a specific calculator configured for the machine's functionalities.

Do not interchange the calculator between machines to avoid losing the machine's parameters, settings and calibrations.

https://truckmanualshub.com/

2.5 - SPACE FOR OPERATING TEMPERATURE THERMOSTAT

For Russia and the Ukraine only :

Hydraulic energy to perform machine movements is provided by an electric motor driven hydraulic pump.The operating speed of the pump is governed by a speed regulator. If the temperature llimits are reached, an audible alarm alerts the operator. All movements are cut off apart from travel to transport position.

Temperature limits :

- Electric machines : from 0° to + 40°
- Fuel-powered machines : from - 20° to + 40°

Location of operating temperature thermostat

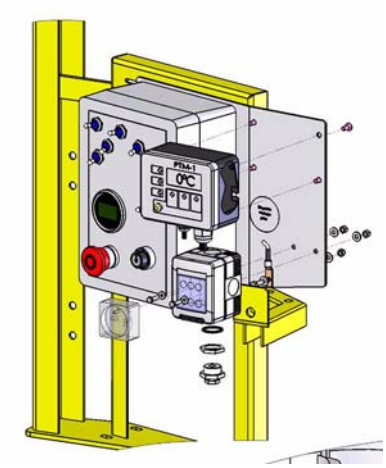

2.6 - DETECTION OF INTERNAL FAULT

***N.B.**-:-The presence of this device depends on the machine configuration.*

The defect indicator flashs to indicate an internal malfunction.

The machine switches to downgraded mode.

Certain movements can be limited or forbidden to preserve the operator's safety.

2.7 - AUTOMATIC ENGINE CUT-OUT

The engine automatically cuts out in the following conditions :

- The alternatorand/or fan is no longer working.
- Engine temperature is too high.
- Oil pressure is too low.
- The air filter of the engine is clogged.

https://truckmanualshub.com/

2.8 - LOAD LIMITING IN THE PLATFORM (IF FITTED)

The overload limitation system activates if the heights defined in the “Transport position maximum height” table are exceeded.

If the load in the platform exceeds the maximum allowed load, no movement can be activated from the control boxes.

The platform overload indicator and the buzzer warn the operator that the overload condition exists.

There are 2 options that will allow restoration of normal operation :

- To return the machine to normal operation remove some weight from the platform.
- Carry out emergency lowering from the ground (Section F 2-Lowering for repairs).

2.9 - CHASSIS TILT

If the machine is located on a slope greater than the permissible slope, the platform control box's fault indicator and the buzzer warn the operator.

Driving is cut (If the machine is unfolded).

To restore the drive function, only movements allowing the machine to be stowed are permitted.

2.10 - DRIVE BUZZER

For Russia and the Ukraine only :

Each travel or lifting movement activates a buzzer (horn).

https://truckmanualshub.com/

1 - Recommendations

The manager of the company responsible for the commissioning of the machine must ensure that the machine is fit for the work it is to perform. i.e. that the machine is suitable to carry out the work in complete safety in compliance with this Operator Manual. All managers who are responsible for persons operating the machine, must be familiar with the regulations currently applicable in the country of use and ensure that they are adhered to.

Before using the machine, read the previous chapters in this manual. Ensure that you have understood the following points :

- **Safety precautions.**
- **Operator's responsibilities.**
- **Presentation and the operating principle of the machine.**

N.B.-:-*The machine reaches optimum performance (speed of movement, load capacity) when the temperature of the oil in the hydraulic circuit is greater than 10°C. After a prolonged period of disuse at a lower temperature, lifting and lowering the platform several times without any load and performing a few translation movements is enough to restore the machine's nominal performances.*

2 - Checks before use

Each day and before the beginning of a new work period and on each change of operator, the machine must be subjected to a visual inspection and a complete functional test.

Any repairs required must be performed before the machine is used, its correct operation depends on it.

Find all the function indicators and controls in Section C 5 - Control boxes

2.1 - VISUAL INSPECTIONS

2.1.1 - General mechanical functions

For all the following checks, ensure that the machine is switched off.

Check the following points :

- The presence of the identification plate, labels and operator manual :
  - Their state of cleanliness and visibility.
  - Clean or replace if necessary.

https://truckmanualshub.com/

- Visual state of the machine :
  - Absence of leaks (battery acid, hydraulic oil, etc.). Absence of foreign objects on all surfaces. Call the staff in charge of the maintenance if necessary.
  - No missing or loose parts (bolts, nuts, connectors, cables, etc.). Refer to the "tightening torques" table quoted in the Maintenance Book.
  - Absence of cracks, broken parts, damaged paint. No deformations or other anomalies on the structure's parts.

Example

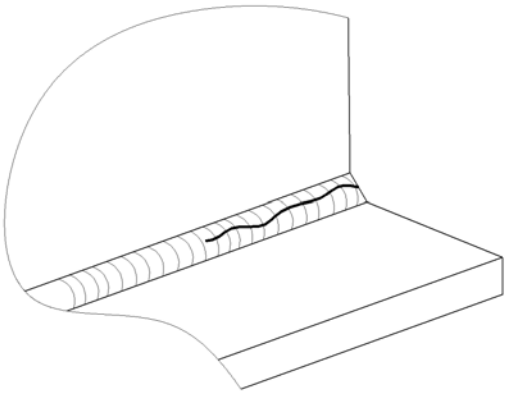

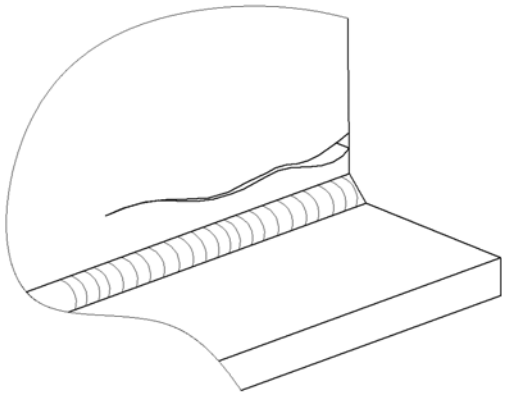

- Cylinders' state :
  - No leaks. Refer to the Maintenance book.
  - No rust and abrasions on the cylinder rod.
  - Absence of foreign objects on all surfaces.
- Steering system's state : wheels, reducers, brakes and tires :
  - No cracks, distortions, damaged paint or other faults
  - No missing or loose bolts. Refer to the "tightening torques" table quoted in the Maintenance Book.
  - Condition of the tyres (cuts, excessive wear, etc.).
- Status of the control boxes :
  - No damage.
  - Back to neutral for all joysticks, selectors, etc..
  - Presence and readablility of the control box labels.
- Movement, safety limit switches :
  - No damage.
  - No missing or loose bolts. Refer to the "tightening torques" table quoted in the Maintenance Book.
  - Absence of foreign objects on all surfaces.
- The state and connection of the electric wires and cables :
  - No damage, wear marks or other faults.
  - No contact between connectors.

https://truckmanualshub.com/

- State of the hydraulic unit and pump :
  - No leaks.
  - No missing or loose parts (bolts, nuts, connectors, cables, etc.).
  - Hydraulic oil filter. Refer to the Maintenance book.
- State of the structure's parts : Arm, platform :
  - No cracks, damaged paint.
  - No distortion in metal components or visible damage.
  - No foreign objects between arms.
  - Guardrails are present and locked in place.
  - Presence and check the original position of the platform control box sliding bar.
- State of the tanks :
  - No leaks.
  - No missing or loose parts (bolts, nuts, connectors, cables, etc.). Top up the oil level, if necessary (Machine in transport position).
- Sufficient fuel level.

2.1.2 - Environment

Section A -Safety precautions.

Check the following points :

- Wind speed (Section G 1-Main characteristics).
- The permissible ground pressure and loading on the machine supporting surface (Section G 1-Main characteristics).
- The maximum permissible load in the platform (Section G 1-Main characteristics).
- The maximum permissible lateral force allowed at the platform (Section G 1-Main characteristics).

https://truckmanualshub.com/

2.2 - FUNCTIONAL TESTS

2.2.1 - Safety features

Features to be tested :

- Operation of the upper and lower emergency stop buttons.
- Operation of the tilt sensor.
- Visual and audible alarms.
- Platform load management system (Where fitted).

For functional test procedures refer to (Section E 3.1-Test procedure).

2.2.2 - Ground control box controls (emergency station)

Refer to the corresponding operations to test the controls in the order mentioned (Section E 3.2-Operation from ground position).

Compact 10/12DX (Compact 2668/3368RT)

Step	Control
1	Movements : Platform elevation/lowering(106)
2	Engine start-up selector(123)-Move upwards.
3	'Enable Switch' selector(123)-Move downwards.
4	Beacon light on/off(24)
5	Control box energizing key selector(72)

H12/15/18SX(L) (HS3388/4388/5388RT(XL))

Step	Control
1	Movements : Platform elevation/lowering(106)
2	Engine start-up selector(22)
3	Beacon light on/off(24)
4	Control box energizing key selector-Dead Man(72)

https://truckmanualshub.com/

2.2.3 - Platform control box controls (driving station)

Refer to the corresponding operations to test the controls in the order mentioned (Section E 3.3-Operations from the platform).

Compact 10/12DX (Compact 2668/3368RT)

Step	Control
1	Movements : Platform elevation/lowering (95)
2	Driving and steering (108)
3	Engine start-up selector (230)
4	Drive speed selector : • Low speed selector (57) • Medium speed selector (58) • High speed selector (59)
5	Centralised stabiliser extension/retraction selector (250)
6	• Front left stabiliser extension/retraction selector (246) • Front right stabiliser extension/retraction selector (247) • Rear left stabiliser extension/retraction selector (248) • Rear right stabiliser extension/retraction (249)
7	Horn selector (62)

H12/15/18SX(L) (HS3388/4388/5388RT(XL))

Step	Control
1	Movements : Platform elevation/lowering (95)
2	Driving and steering (108)
3	Engine start-up selector (61)
4	Touch pads and driving speed indicator : • Low speed selector (57) • Medium speed selector (58) • High speed selector (59)
5	Centralized outriggers selector switch (94)
6	Touch pads and stabilizer extension indicator : • Front left (97) • Front right (98) • Rear left (99) • Rear right (100)
7	Touch pads and stabilizer retraction indicator : • Front left (101) • Front right (102) • Rear left (103) • Rear right (104)
8	Platform elevation/lowering selector switch and indicator (95)
9	Differential lock selector switch (60)
10	Horn selector switch (62)

https://truckmanualshub.com/

2.3 - PERIODICAL CHECKS

The machine must be inspected on a regular basis at intervals in accordance with the requirements set forth in the Country of use but no less than once per year. The purpose of the inspection is to detect any defect which could lead to an accident during routine use of the machine.

These inspections must be carried out by a competent company or person whose selection is under the responsibility of the manager (Company employee or other).

The inspection results must be recorded in the safety register or machine log book controlled and overseen by the company manager. This register or machine log book and the list of competent repair persons must be made available to the Government Work Inspector and company safety commitee at all times.

N.B.-:- *Section H Intervention register*

2.4 - REPAIRS AND ADJUSTMENTS

Extensive repairs, interventions or adjustments on the safety systems or elements must be performed by a HAULOTTE Services® employee or a HAULOTTE Services®-approved employee with HAULOTTE Services® training, using original spare parts only.

HAULOTTE Services® technicians are specially trained to carry out extensive repairs, interventions or adjustments on the safety systems or elements of HAULOTTE® machines, and carry genuine HAULOTTE spare parts and tools as required, and also provide fully documented reports on all work completed..

HAULOTTE Services® will not take responsibility for any consequential outcomes resulting from inferior services/repairs carried out by others.

HAULOTTE advises you that NO modifications carried out without the written permission of HAULOTTE® will void the HAULOTTE warranty..

2.5 - INSPECTION / TESTING REQUIREMENTS

Intervention to be made after :

- Extensive dismantling and reassembly.
- Repairs involving the machine's essential components.
- Any accident causing stress to the machine.

Perform a fitness for function inspection, a condition inspection and static and dynamic tests (Consult the After-Sales Service HAULOTTE Services®).

https://truckmanualshub.com/

3 - Operation

***N.B.**-:-The functions are described for the entire range. Refer to the machine model to identify the controls and functions indicators.*

Find all the function indicators and controls in Section C 5 - Control boxes

***N.B.**-:-Using unsuitable fuel may cause diminished performance, difficulties starting, excessive pollution and premature wear. To establish the type of fuel suitable for the engine fitted on your HAULOTTE® machine, please refer to the engine manufacturer's manual. The engine may not be covered by the warranty in case of damage caused by using unsuitable fuel.*

3.1 - TEST PROCEDURE

3.1.1 - Emergency stop button operation

Ground control box emergency stop button

Step	Action
1	Pull the emergency stop buttons(15, 46).
2	Turn the key on the control box activation selector switch (72) to the right to energize the ground control box. The indicators light up.
3	Push the emergency stop button (15). The battery charge (4) and engine oil pressure (2) indicators remain lit.

Platform control box emergency stop button

Step	Action
1	Pull the emergency stop buttons(15, 46).
2	Turn the key on the control box activation selector switch (72) to the left to energize the platform control box. The indicators light up.
3	Push the emergency stop button (46). The power on indicator (31) remains lit. The engine start-up (61) and horn (62) functions are disabled.

***N.B.**-:-An audible signal signal repeated 1 or 2 times every 20-30 seconds intermittently when the machine is in transport position indicates that an emergency stop button is pushed in, the machine is stopped but the power is still switched on. To switch off the power to the machine, turn the console activation selector key (72) on the lower console in the centre to neutral position.*

https://truckmanualshub.com/

3.1.2 - Tilt sensor switch operation

Machine unfolded, the slope sensor gives an audible signal telling the operator that the machine should not be deployed. In this case, fully lower the platform and reposition the machine on level ground before raising the platform again.

N.B.-:-*Depending on your machine configuration, outside assistance may be necessary in order to carry out this operation.*

1. Pull the emergency stop push-buttons on the upper and lower control boxes (15, 46).
2. Switch on the machine from the lower control box (72).
3. Locate the tilt sensor next to the ground control box.
4. Manually tilt and maintain the tilt sensor towards the front for a few seconds (Section C 2-Main components) :
5. The audible beep sounds.
6. For machines fitted with : The slope sensor prevents lifting and driving movements.

3.1.3 - Visual and sound alarms

1. Pull the emergency stop buttons (15, 46).
2. Select the upper console (72). The indicator (31) of the control box lights up, and there is audible signal (beep).

3.1.4 - Weighing system

1. Pull the emergency stop buttons (15, 46).
2. Select the upper console (72). Platform control box overload indicator (85 : Compact / 30 : HSX(L)) flashes.

3.2 - OPERATION FROM GROUND POSITION

Ground control box is an auxiliary to be used only in case of emergency.

3.2.1 - Machine start-up

1. Pull the emergency stop button (15).
2. Turn the key on the control box activation selector switch (72) to the right to energize the ground control box. The following indicators light up :
   - Electrical pre-heating (1).
   - Engine oil pressure (2).
   - Engine temperature (3).
   - Battery charge (4).
3. For HSX(L) : The clogged air filter indicator (5) is switched off.
4. For HSX(L) : Press on the starter selector (22). For Compact DX : Push the selector upwards (123). The engine starts. The indicators go out.
5. Let the engine heat up.

https://truckmanualshub.com/

3.2.2 - Machine shutdown

- Turn the key of the control box activation selector (72) to the center.
- The machine is shut down. The power to the machine is switched off, all the indicators on the lower console are off.

3.2.3 - Movement control

- For Compact 10/12DX (Compact 2668/3368RT) :

***N.B.**-:-Activate the controls and the 'Enable Switch' system simultaneously to perform the various movements.*

Ground control box controls (emergency station)

Control		Action
Platform elevation/ lowering selection		Platform raises : • Push the console activation selector (72) to the right. • Push the "Dead man" selector (123) downwards and the platform raising and lower selector (106) upwards simultaneously.
		Lowering of platform : • Push the console activation selector (72) to the right. • Push the "Dead man" selector (123) and the platform raising and lowering selector (106) downwards simultaneously.

***N.B.**-:-Either the selector button or speed selector paddle are released, movement stops.*

- For H12/15/18SX(L) (HS3388/4388/5388RT(XL)) :

Ground control box controls (emergency station)

Control		Action
Platform elevation/ lowering selection		Platform raises : • Push the console activation selector (72) to the right and hold. • Push the platform elevation / lowering selector (106) upwards to raise the platform.
		Lowering of platform : • Push the console activation selector (72) to the right and hold. • Press the platform elevation / lowering selector (106) downwards to lower the platform.

***N.B.**-:-Either the selector button or speed selector paddle are released, movement stops.*

https://truckmanualshub.com/

3.2.4 - Other controls

- Switching from the ground control box to the platform control box :

The emergency stop button (15) must be pulled out.

- **Turn the key on the control box activation selector switch (72) to the left to energize the platform control box. The ground control box controls are de-energized.**

- Switching from the platform control box to the ground control box :

The emergency stop button (15) must be pulled out.

- **Turn the key on the control box activation selector switch (72) to the right to energize the ground control box. The platform control box controls are de-energized.**

- For the machines equipped with beacon lights :
- Push the beacon light selector switch (24) to the right to switch on the beacon light.
- Push the beacon light selector switch (24) to the left to switch off the beacon light.

3.3 - OPERATIONS FROM THE PLATFORM

3.3.1 - Machine start-up

For Compact 10/12DX (Compact 2668/3368RT) : Check that the harness is correctly clipped to the rear of the upper console.

1. Pull the emergency stop button (46).
2. Press on the start/stop engine selector (61 : HSX(L) / 230 : Compact). The engine starts. For HSX(L) : The power-up indicator (31) lights up.
3. Let the engine heat up.

https://truckmanualshub.com/

3.3.2 - Machine shutdown

For Compact : Press on the start/stop engine selector (230).

For HSX(L) : Press the emergency stop button (46).

3.3.3 - Movement control

Activate the controls and the 'Enable Switch' system simultaneously to perform the various movements. Except for stabilising movements.

Platform control box controls (driving station) Compact 10/12DX (Compact 2668/3368RT)

Control		Action
Driving		Set the driving speed selector to : • Low speed (57) • Medium (58) • Fast speed (59) Push the drive joystick (108) forwards to move the machine forwards.
		Set the driving speed selector to : • Low speed (57) • Medium (58) • Fast speed (59) Push the drive joystick (108) backwards to reverse the machine.
Steering		Push the drive joystick (108) forwards to move the machine forwards. Push the front-axle steering selector switch (108) to the right to steer to the right.
		Push the drive joystick (108) forwards to move the machine forwards. Push the front-axle steering selector switch (108) to the left to steer to the left.
Platform elevation/ lowering	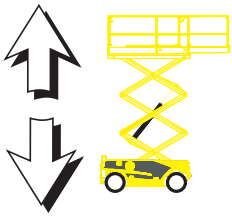	Push the platform elevation / lowering selector (95) upwards to raise the platform. Push the movement joystick (108) forwards to raise the platform.
		Press the platform elevation / lowering selector (95) downwards to lower the platform. Push the movement joystick (108) backwards to lower the platform.
Drive speed (minimum)		Set the drive speed selector switch (59) to for high-speed driving (long distance driving, tarmac, concrete).
		Position the driving speed selector (58) on for medium speed driving (crossing uneven ground, slope).
		Set the driving speed selector (57) to for low-speed driving (short distance, final approach, unloading from lorries).
Stabilizer extension/ retraction		Push the centralised stabiliser extension/retraction selector (250) downwards until the machine is stable (LED lit).
		Push the centralised stabiliser extension/retraction selector (250) upwards until the stabilisers are fully retracted (LED off).

https://truckmanualshub.com/

Control		Action
Front left stabilizer extension/ retraction		Push the front left stabiliser extension/retraction selector (246) downwards until the stabiliser is braced against the ground (LED lit).
		Push the front left stabiliser extension/retraction selector (246) upwards until the stabiliser is fully retracted (LED off).
Front right stabilizer extension/ retraction		Push the front right stabiliser extension/retraction selector (247) downwards until the stabiliser is braced against the ground (LED lit).
		Push the front right stabiliser extension/retraction selector (247) upwards until the stabiliser is fully retracted (LED off).
Rear left stabilizer extension/ retraction		Push the rear left stabiliser extension/retraction selector (248) downwards until the stabiliser is braced against the ground (LED lit).
		Push the rear left stabiliser extension/retraction selector (248) upwards until the stabiliser is fully retracted (LED off).
Rear right stabilizer extension/ retraction		Push the rear right stabiliser extension/retraction selector (249) downwards until the stabiliser is braced against the ground (LED lit).
		Push the rear right stabiliser extension/retraction selector (249) upwards until the stabiliser is fully retracted (LED off).

***N.B.**-:-The release of the selectors and (or) joysticks causes all movement to stop.*

https://truckmanualshub.com/

Activate the controls and the 'Enable Switch' system simultaneously to perform the various movements. Except for stabilising movements.

Platform control box controls (driving station) H12/15/18SX(L) (HS3388/4388/5388RT(XL))

Control		Action
Driving		Set the driving speed selector to : • Low speed (57) • Medium (58) • Fast speed (59) Push the drive joystick (108) forwards to move the machine forwards.
		Set the driving speed selector to : • Low speed (57) • Medium (58) • Fast speed (59) Push the drive joystick (108) backwards to reverse the machine.
Steering		Push the drive joystick (108) forwards to move the machine forwards. Push the front-axle steering selector switch (108) to the right to steer to the right.
		Push the drive joystick (108) forwards to move the machine forwards. Push the front-axle steering selector switch (108) to the left to steer to the left.
Platform elevation/ lowering	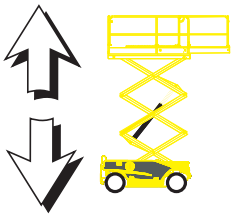	Push the platform elevation / lowering selector (95) upwards to raise the platform. Push the movement joystick (108) forwards to raise the platform.
		Press the platform elevation / lowering selector (95) downwards to lower the platform. Push the movement joystick (108) backwards to lower the platform.
Drive speed (minimum)		Set the drive speed selector switch (59) to for high-speed driving (long distance driving, tarmac, concrete).
		Position the driving speed selector (58) on for medium speed driving (crossing uneven ground, slope).
		Set the driving speed selector (57) to for low-speed driving (short distance, final approach, unloading from lorries).
Centralised stabilizer	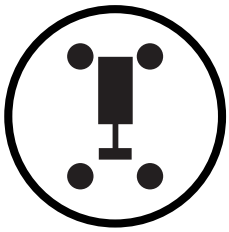	Push the centralised outriggers touch pads (94) until the machine is stabilized (LED on)

https://truckmanualshub.com/

Control		Action
Front left stabilizer extension/ retraction	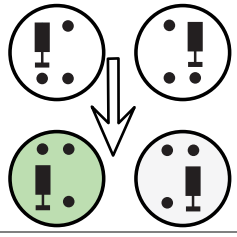	Push the touch pads (97) until the front left stabilizer is set against the ground (LED on).
	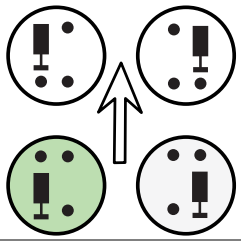	Push the touch pads (101) until the front left stabilizer is totally retracted (LED off).
Front right stabilizer extension/ retraction	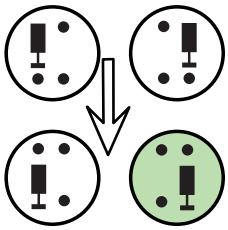	Push the touch pads (98) until the front right stabilizer is set against the ground (LED on).
	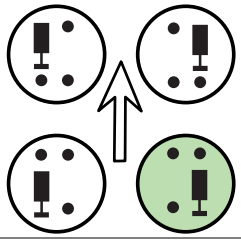	Push the touch pads (102) until the front right stabilizer is totally retracted (LED off).
Rear left stabilizer extension/ retraction	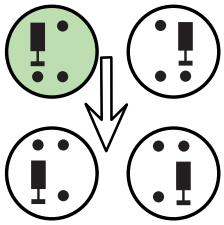	Push the touch pads (99) until the rear left stabilizer is set against the ground (LED on).
	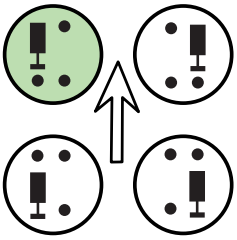	Push the touch pads (103) until the rear left stabilizer is totally retracted (LED off).

https://truckmanualshub.com/

Control		Action
Rear right stabilizer extension/ retraction	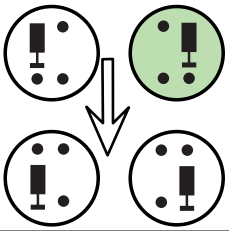	Push the touch pads (100) until the rear right stabilizer is set against the ground (LED on).
	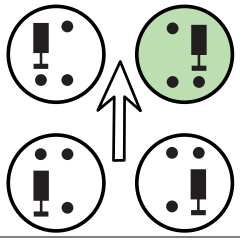	Push the touch pads (104) until the rear right stabilizer is totally retracted (LED off).

N.B.-:-*The release of the selectors and (or) joysticks causes all movement to stop.*

3.3.4 - Other controls

- Horn : Press the Horn switch (62) to sound the horn.

N.B.-:-*The horn function is disabled if the emergency stop is activated.*

- For HSX(L) : Differential lock : Press the differential blocking touch pads (60).

https://truckmanualshub.com/

E- Driving

https://truckmanualshub.com/

Find all the function indicators and controls in Section C 5 - Control boxes

1 - Emergency lowering

1.1 - PRINCIPLE

***N.B.**-:-During emergency manoeuvres controlled from the ground with extension out, it is essential to ensure that there is no obstacle under the platform (wall, beam, electric line, etc).*

Emergency lowering is implemented if the operator using the console on the platform needs to be rescued and cannot operate the controls himself even if the machine is operating normally. This situation may arise if the operator is taken ill, is injured or if the control console is inaccessible.

A ground operator trained in using the emergency controls and in possession of the starter key can use the ground control box with the main power source to lower the platform operator.

If the machine is stuck or hooked in surrounding structures or equipment, it is essential to release the operators before intervening on the machine.

1.2 - PROCEDURE

Section A 2-Pre-operation instructions

1. Turn the key on the control box activation selector switch (72) to the right to energize the ground control box. The platform control box controls are de-energized.
2. Lower the platform from the ground control box.

***N.B.**-:-Activating the emergency controls listed above deactivates the controls of the console on the platform.*

https://truckmanualshub.com/

1.3 - EXTRAORDINARY PROCEDURE

In the context of emergency lowering, it is possible that the emergency stop located on the platform is activated or that safety mechanisms such as the overload limitor are preventing the machine from operating normally.

During an exceptional procedure, for machines which are not fitted with the manual rescue control as described in the "emergency lowering" paragraph, activating the lower console deactivates the emergency pushbutton located on the platform.

***N.B.**-:-During these exceptional manoeuvres, movements are slowed down for safety reasons.*

For Compact 10/12DX (Compact 2668/3368RT) : In these conditions only, activate the "overriding system" switch located under the sealed cover and simultaneously press the platform lowering button until the safety mechanisms are deactivated (alarms stop) and therefore normal movements are possible again, or until the operator can be rescued.

"Overriding system" switch under sealed cover

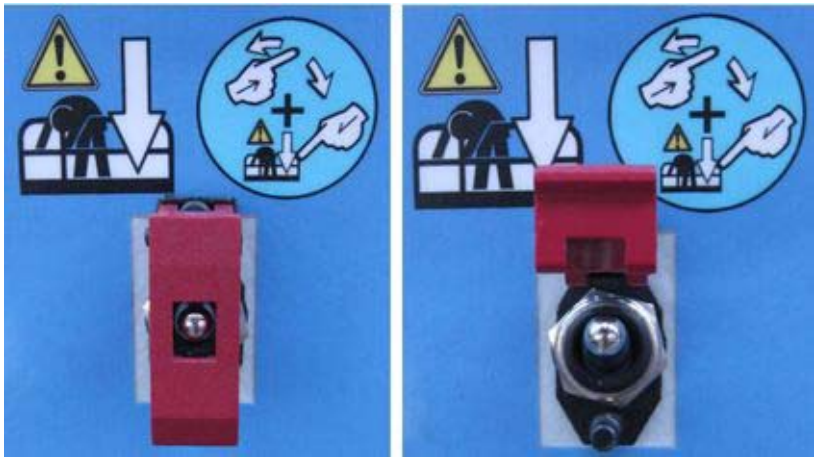

Once rescue operations are terminated, contact Haulotte Services to report the incident and schedule the fitting of a new seal. IMPORTANT : if the seal is missing, this is considered to be abnormal use of the machine.

For H12/15/18SX(L) (HS3388/4388/5388RT(XL)) : 1.2 - Procedure

https://truckmanualshub.com/

2 - Lowering for repairs

2.1 - PRINCIPLE

If an operating problem prevents the user on the platform from descending, a competent operator can do this from the chassis.

2.2 - PROCEDURE

***N.B.**-:-During emergency manoeuvres controlled from the ground with extension out, it is essential to ensure that there is no obstacle under the platform (wall, beam, electric line, etc).*

For : COMPACT 10DX (COMPACT 2668RT) - COMPACT 12DX (COMPACT 3368RT)

- A manual control located behind the access ladder at the rear of the machine allows the platform to be lowered.

For : H12SX (HS3388RT) - H15SX (HS4388RT) - H18SX (HS5388RT) - H12SXL (HS3388RTL) - H15SXL (HS4388RTL) - H18SXL (HS5388RTXL)

1. Pull the manual control located on the machine chassis.
2. Release it to halt lowering.

If the operator in the platform has to exit the platform when elevated, he must exit onto a sturdy, safe structure, the transfer must respect the following recommendations :

- The operator must secure himself by using 2 straps. One lanyard is attached to the platform, the other to the structure onto which he wishes to exit.
- The operator must exit the platform via the standard access point.
- The operator must not detach the strap connected to the platform until transfer is complete or while the transfer still presents a danger.

If the operator cannot be lowered by any of the above mentioned methods, contact HAULOTTE Services® immediately.

https://truckmanualshub.com/

3 - Towing

In case of a machine failure, it is possible to tow it to load it onto a trailer.

3.1 - DISSENGAGING THE DRIVE HUBS

To tow a broken-down machine, disconnect the wheel drive hubs.

Perform these operations on flat, horizontal ground. Failing that, block the wheels to immobilize the machine. During an operation of disengaging the drive hubs, the machine is in free wheels, the brake system no longer functions.

For : H12SX (HS3388RT) - H15SX (HS4388RT) - H12SXL (HS3388RTXL) - H15SXL (HS4388RTXL)

Unscrew the 2 nuts with an 11 mm spanner.

Turn the part and screw it back on.

The gears are released.

For : H18SX (HS5388RT) - H18SXL (HS5388RTXL)

Unscrew the central nut (1) until the nut is at the limit.

https://truckmanualshub.com/

3.2 - BRAKE RELEASE

To tow a broken-down machine, perform manual brake release.

Perform these operations on flat, horizontal ground. Failing that, block the wheels to immobilize the machine. During an operation of disengaging the drive hubs, the machine is in free wheels, the brake system no longer functions.

For Compact 10/12DX (Compact 2668/3368RT) : :

1. Open the tap (NV1) (Unscrew completely).
2. Push the pump by hand (HP1) until the brake is fully released.
3. Slow towing.

After towing the machine : Close the tap (NV1) (Screw up completely).

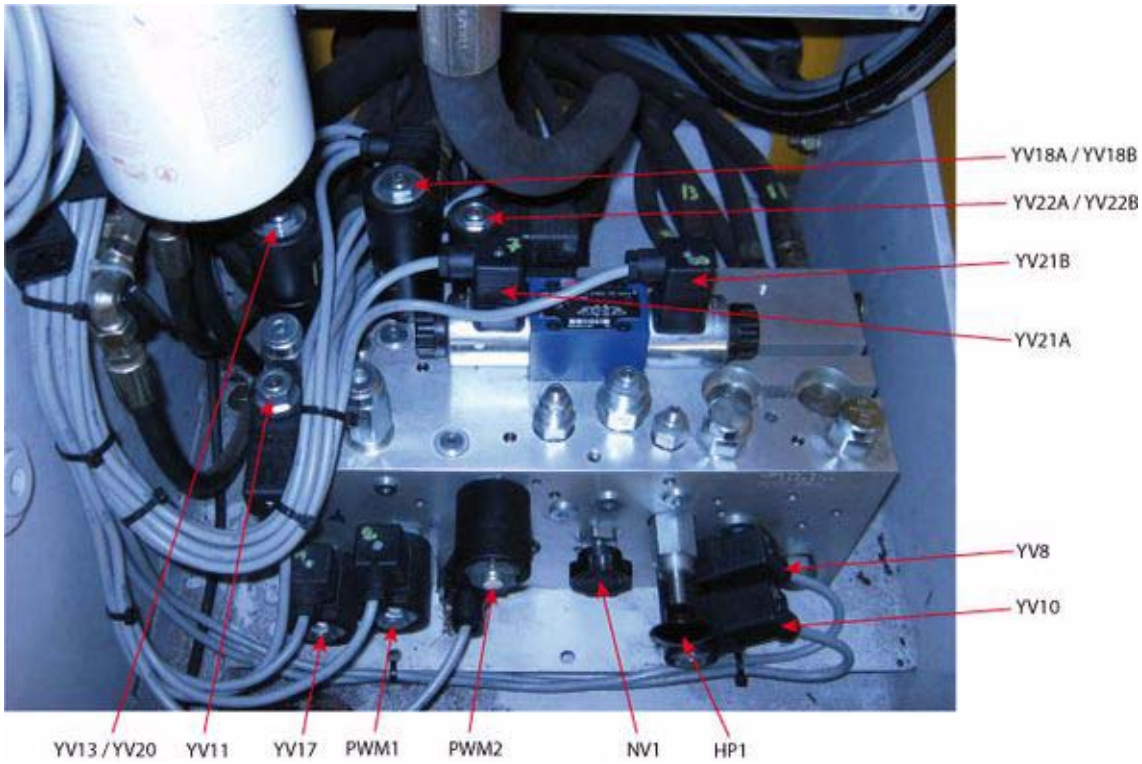

In the towing configuration, the machine is no longer slowed down. Use a drawbar to avoid any risk of accident.

Do not exceed 5 km/h (3,10 mph) .

https://truckmanualshub.com/

3.3 - REENGAGING THE DRICE HUBS

After repairing the machine, reengage the wheel drive hubs.

For H12SX (HS3388RT) - H15SX (HS4388RT) - H12SXL (HS3388RTXL) - H15SXL (HS4388RTXL)

Perform in reverse order to the drive hub disengaging procedure.

For H18SX (HS5388RT) - H18SXL (HS5388RTXL)

- Machine with outriggers

1. Stabilize the machine.
2. Screw the central nut up again to engage the internal gear.
3. Turn the wheel to line up the gear teeth in case of resistance.
4. Screw the central nut up completely when the once the drive gear has commenced to engage.

- Machine without stabilizers

5. Screw the central nut up again to engage the internal gear.
6. Engage the driving gear slowly in case of resistance.
7. Screw the central nut up completely when the once the drive gear has commenced to engage.

https://truckmanualshub.com/

4 - Loading and unloading

4.1 - PRINCIPLE

To avoid any risk of sliding during loading, ensure that :

- **The loading ramps can bear the load.**
- **The loading ramps are correctly attached.**
- **The loading ramp has sufficient grip.**
- **The machine is completely stowed.**

To climb the slope, select low driving speed .

If the slope is too steep, use a winch in addition to traction.

Never place yourself below or too close to the machines during loading.

A wrong move can lead to the tipping over of the machine and cause serious bodily and material accidents.

https://truckmanualshub.com/

4.1.1 - Loading by lifting

Ensure that :

- The machine is completely stowed.
- The platform must be empty.
- The lifting equipment ie. slings, shackles, hooks, lifting beam etc. are in good condition and of sufficient capacity.
- The personnel performing the lift is authorised to complete the lift.

Procedure for the use of slings - Compact 10DX (Compact 2668RT) - Compact 12DX (Compact 3368RT)

https://truckmanualshub.com/

Procedure for the use of slings - Compact 10DX (Compact 2668RT) - Compact 12DX (Compact 3368RT) - Front view of the machine

https://truckmanualshub.com/

F - Special procedure

Procedure for the use of slings - Compact 10DX (Compact 2668RT) - Compact 12DX (Compact 3368RT) - Rear view of the machine

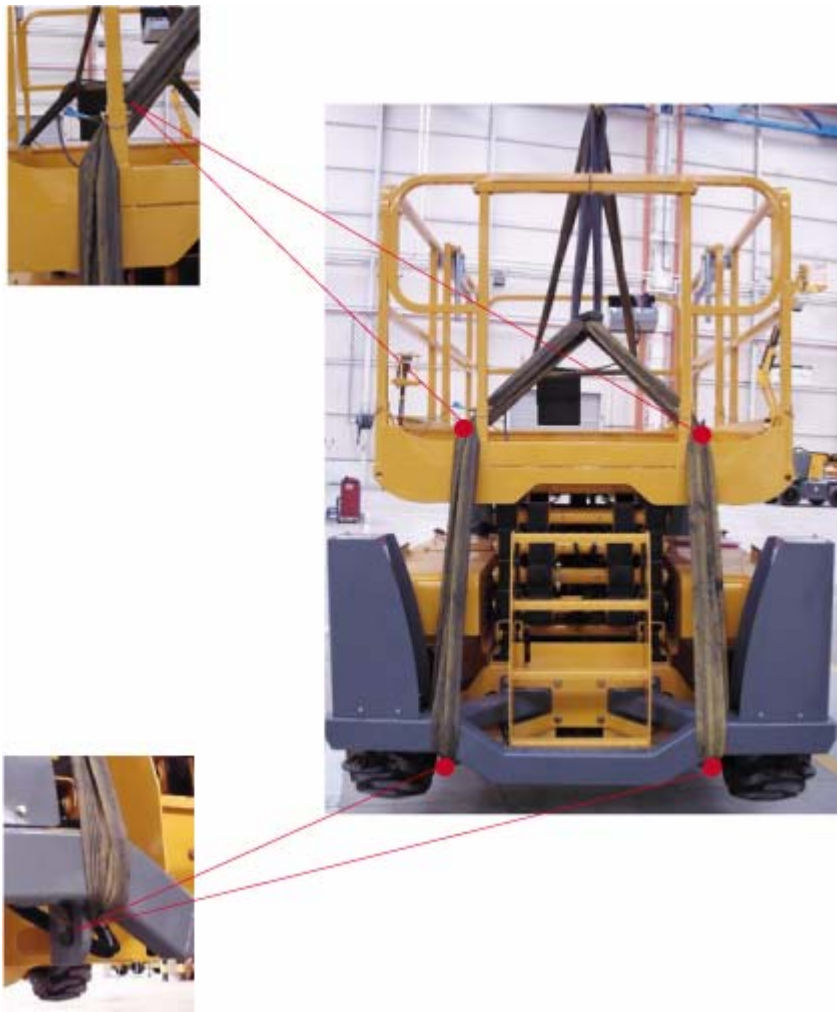

Machine	Number of slings	Length	Maximum load per sling and shackle
Compact 10DX (Compact 2668RT) Compact 12DX (Compact 3368RT)	6	4 m(13 ft1 in)	3000 kg(6615 lb)

The capacity of the lifting device must be 5000 kg(11025 lb).

Pay special attention to sharp edged surfaces, because they can cut the slings.

Before to moving or elevating the machine higher than 20 cm above the ground, make sure it is well balanced.

https://truckmanualshub.com/

Procedure for the use of slings - H12SX (HS3388RT) - H15SX (HS4388RT) - H18SX (HS5388RT)

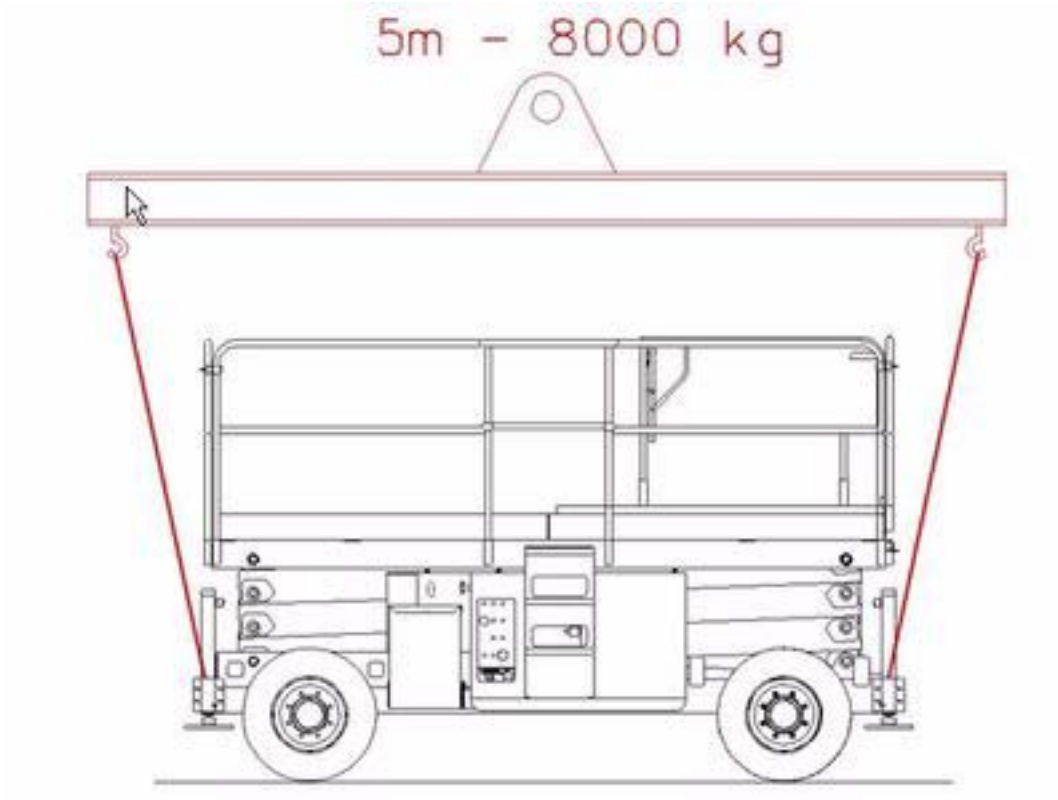

Distribution of loads

	H12SX (HS3388RT)	H15SX (HS4388RT)	H18SX (HS5388RT)
Total weight	5520 kg(12172 lb)	6270 kg(13825 lb)	7250 kg(15986 lb)
Front axle load	2810 daN (6182 lbs)	2970 daN (6534 lbs)	3450 daN (7590 lbs)
Rear axle load	2710 daN (5962 lbs)	3300 daN (7260 lbs)	3800 daN (8360 lbs)
Left side load	2910 daN (6402 lbs)	3290 daN (7238 lbs)	3780 daN (8316 lbs)
Right side load	2610 daN (5742 lbs)	2980 daN (6556 lbs)	3470 daN (7634 lbs)

The distribution of loads allows to ensure stability in lifting.

https://truckmanualshub.com/

4.2 - PUTTING IN TRANSPORT POSITION

The machine must be completely stowed.

1. Check the platform is completely empty.
2. Secure the machine to the anchorage points provided for this purpose.
3. The guardrails must be locked and/or folded back.
4. Extensions must be locked and maintained with straps.

For Compact 10/12DX (Compact 2668/3368RT)

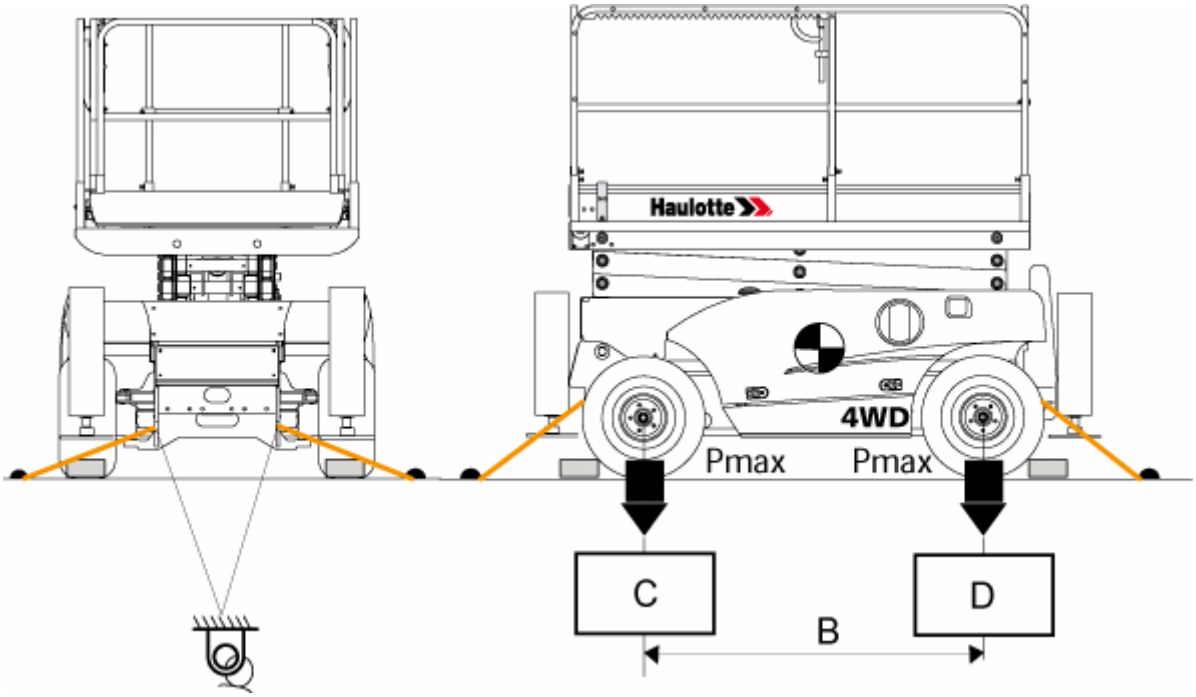

Possible variant :

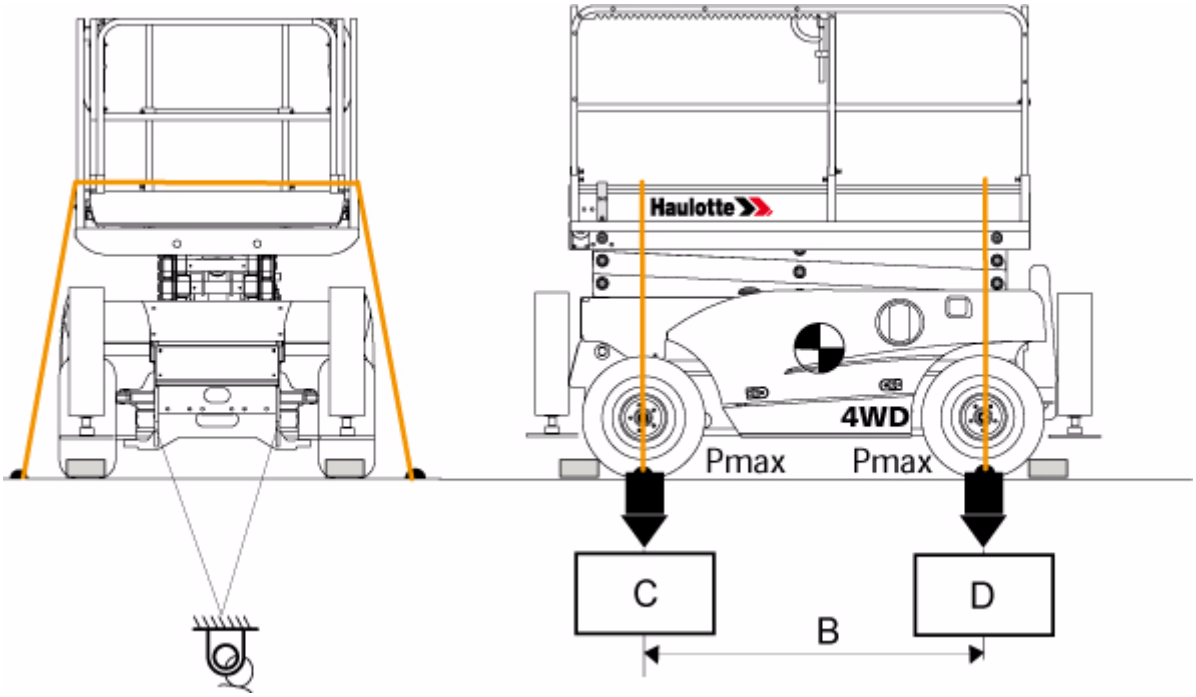

https://truckmanualshub.com/

For H12/15/18SX(L) (HS338/4388/5388RT(XL))

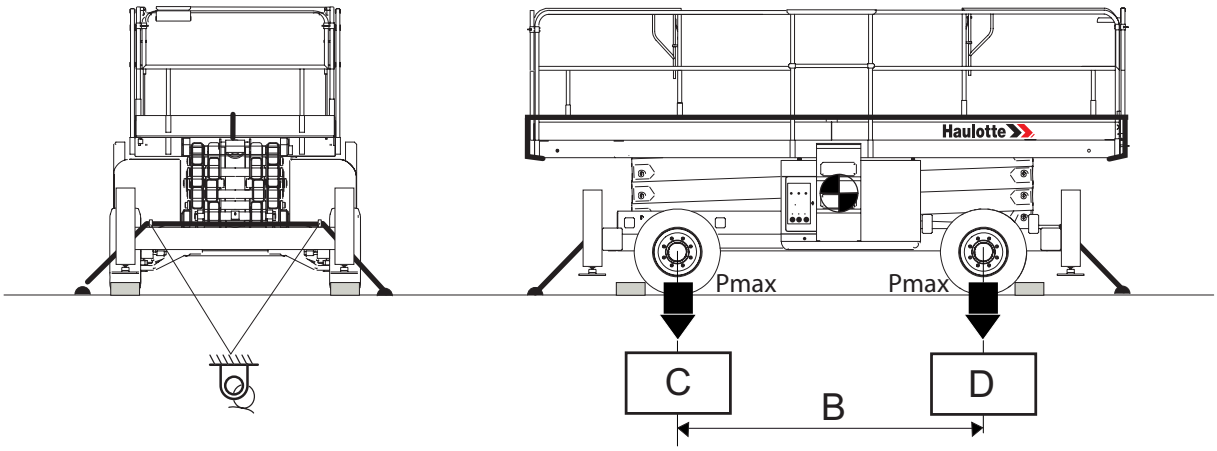

Loading characteristics

Marking	Description	COMPACT 10DX (COMPACT 2668RT)	COMPACT 12DX (COMPACT 3368RT)
B	Lateral distance between the wheels(1).	1.87 m(.6 ft1 in)	1.87 m(.6 ft1 in)
C	Front wheel ground pressure((1.))	8.42 daN/cm² (1,737 lbf/sq.ft)	6.1 daN/cm² (1,258 lbf/sq.ft)
D	Rear wheel ground pressure((1.))	8.42 daN/cm² (1,737 lbf/sq.ft)	6.1 daN/cm² (1,258 lbf/sq.ft)
	Anchorage point		

(1.) Check the technical data in the technical characteristics

Loading characteristics

Marking	Description	H12SX (HS3388RT)	H12SXL (HS3388RTXL)
B	Lateral distance between the wheels(1).	2.75 m(9 ft0 in)	2.75 m(9 ft0 in)
C	Front wheel ground pressure((1.))	11 daN/cm² (2,25 lbf/sq.ft)	9,2 daN/cm² (1,88 lbf/sq.ft)
D	Rear wheel ground pressure((1.))	11 daN/cm² (2,25 lbf/sq.ft)	9,2 daN/cm² (1,88 lbf/sq.ft)
	Anchorage point		

(1.) Check the technical data in the technical characteristics

https://truckmanualshub.com/

Loading characteristics

Marking	Description	H15SX (HS4388RT)	H15SXL (HS4388RTXL)
B	Lateral distance between the wheels(1).	2.75 m(9 ft0 in)	2.75 m(9 ft0 in)
C	Front wheel ground pressure((1.))	12 daN/cm² (2,46 lbf/sq.ft)	9,2 daN/cm² (1,88 lbf/sq.ft)
D	Rear wheel ground pressure((1.))	12 daN/cm² (2,46 lbf/sq.ft)	9,2 daN/cm² (1,88 lbf/sq.ft)
	Anchorage point		

(1.) Check the technical data in the technical characteristics

Loading characteristics

Marking	Description	H18SX (HS5388RT)	H18SXL (HS5388RTXL)
B	Lateral distance between the wheels(1).	2.75 m(9 ft0 in)	2.75 m(9 ft0 in)
C	Front wheel ground pressure((1.))	16 daN/cm² (3,28 lbf/sq.ft)	9,6 daN/cm² (1,97 lbf/sq.ft)
D	Rear wheel ground pressure((1.))	16 daN/cm² (3,28 lbf/sq.ft)	9,6 daN/cm² (1,97 lbf/sq.ft)
	Anchorage point		

(1.) Check the technical data in the technical characteristics

4.3 - UNLOADING

Before operating, check that the machine is in good condition.

If the machine has been damaged during transportation, contact the transporter in writing.

1. The machine is completely stowed.
2. Remove the tie downs.
3. Start the machine.

4.4 - WARNING

Do not travel down the ramp at a fast speed.

https://truckmanualshub.com/

5 - Detection of internal fault

5.1 - PRINCIPLE

For machines fitted with.

- The machine is equipped with an on-board defect detection system.
- The number of times the defect indicator flashes indicates the type of fault to the operator.
- According to the type of fault, the machine switches in DOWNGRADED MODE; certain movements can be limited or forbidden by the system to maintain the operator's safety.

5.2 - PROCEDURE

1. Stow the machine.
2. Switch the machine off.

Do not use the machine until the fault has been repaired.

Perform the required maintenance (see the machine maintenance book).

https://truckmanualshub.com/

6 - On-board generator(Option)

6.1 - PRINCIPLE

For H12/15/18SX(L) (HS3388/4388/5388RT(XL))

The on-board generator supplies voltage (220 V or 110 V depending on the option) in the cage (or platform) able to connect a tool with the maximum power of 3,3 kW (4,4 Hp) .

Do not expose the on-board generator to direct contact with a water beam or a high pressure cleaner.

6.2 - PROCEDURE

Put into service :

1. Start up the machine with the platform control box (or platform). Heat the engine during 15 mn before any operation.
2. Set the switch selector, above the socket power, to ON (1). The starting of the generator will begin only when all Leds of the platform control box are off (No movement therefore selected). The engine accelerate. The green indicator comes on indicating the on-board generator start-up.
3. Connect the tool to the socket.
4. You can change the tool at any time.

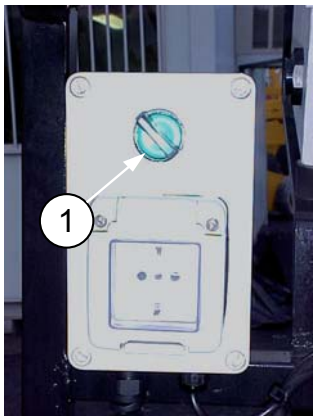

***N.B.**-:-When using the on-board generator, you cannot make any machine movements. To make a movement, you must switch off the on-board generator.*

Power off :

5. Disconnect the tool from the socket.
6. Set the switch selector, above the socket power, to OFF. The green indicator extinguish.
7. Machine movements are once again active.

The tension varies according to hydraulic oil.

https://truckmanualshub.com/

1 - Main characteristics

Certain options can modify the machine's operating characteristics and its associated safety. If your machine was originally delivered with options fitted, replacing a safety component associated with a particular options not require any particular precautions other than those associated with the installation itself (static test).

Otherwise, it is essential to follow the manufacturer's recommendations below :

- Installation by authorised HAULOTTE® personnel only.
- Update the manufacturer's identification plate.
- Have stability tests carried out by a certified agency/competent person.
- Ensure label compliance.

HAULOTTE® has a continuous improvement policy in place for its product range ; Given this policy, The Company reserves the right to modify their product technical characteristics without notice.

The hand and feet vibration and noise level values indicated in the technical characteristics tables are obtained in the following conditions :

- The maximum quadratic mean value weighted as an acceleration frequency and the total value of the vibrations to which the hand-arm system is exposed have been measured on the products by simulating a cycle representative of normal use. The values meet the requirements of the 2006/42/CE machine directive.
- For electric machines, the sound power level is measured at the drive station under the conditions described by the 2006/42/CE machine directive.
- For machines equipped with internal combustion engines, the noise level guarantees (LWA displayed on the product) and is measured in accordance with the method and the conditions described in Appendix III, Part B, Method 1 and 0 of the 2000/14/CE European directive.

https://truckmanualshub.com/

G - Technical characteristics

For COMPACT 10DX (COMPACT 2668RT) - Technical characteristics

Machine	COMPACT 10DX		COMPACT 2668RT	
Characteristics	Metric	Imperial	Metric	Imperial
Length of machine in stowed position	2,65 m	(8 ft8 in)	2,65 m	(8 ft8 in)
Overall width of machine	1.77 m	(5 ft10 in)	1.77 m	(5 ft10 in)
Machine height	2.43 m	(8 ft0 in)	2.43 m	(8 ft0 in)
Height when stowed	1.57 m	(5 ft2 in)	1.57 m	(5 ft2 in)
Maximum work height	10.15 m	(33 ft4 in)	10.15 m	(33 ft4 in)
Maximum platform height	8.15 m	(26 ft9 in)	8.15 m	(26 ft9 in)
Platform length	2.49 m	(8 ft2 in)	2.49 m	(8 ft2 in)
Platform width	1,54 m	(5 ft0 in)	1,54 m	(5 ft0 in)
Outer turning radius (without retracted axle adjustment)	3.50 m	(11 ft6 in)	3.50 m	(11 ft6 in)
Inner turning radius (with axles retracted)	1.25 m	(4 ft1 in)	1.25 m	(4 ft1 in)
Distance between centres of the wheels	1,87 m	(6 ft2 in)	1,87 m	(6 ft2 in)
Dumping CE - AS	3 °			
Rated slope ANSI - CSA			0 °	
Slope warning ANSI - CSA			2 °	
Maximum wind speed allowed	45 km/h	(28 mph)	45 km/h	(28 mph)
Total weight	3470 kg	(7651 lb)	3470 kg	(7651 lb)
Maximum platform load	565 kg	(1246 lb)	565 kg	(1246 lb)
Capacity when extended	150 kg	(330 lb)	150 kg	(330 lb)
Maximum number of people on the platform	3			
Maximum person on extension (refer to the capacity on extension recommended)	1			
Engine type	KUBOTA D1105-W1			
Engine power	18,5 kW (24.5 Hp)			
Engine power when idle	9 kW (12 Hp)			
Fuel consumption when idle	260 g/kWh			
Sound level at 10 m(32 ft9 in)	73 dB (A)			
Noise emission level	101 dB (A)			
Hand vibration	<2,5 m/s²	(98.4 in/s²)	<2,5 m/s²	(98.4 in/s²)
Feet vibration	<0,5 m/s²	(19.7 in/s²)	<0,5 m/s²	(19.7 in/s²)
Fuel tank capacity	30 l	(8 gal US)	30 l	(8 gal US)
Hydraulic oil tank capacity	75 l	(20 gal US)	75 l	(20 gal US)
Operating batteries	12 V-74 Ah			
Differential lock	Yes			
Maximum climbable slope	40 %			
Wheel nut torque	19 daN.m	(140 lbf.ft)	19 daN.m	(140 lbf.ft)
Maximum ground pressure on hard ground	8.42 daN/cm²	1,737 lbf/sq.ft	8.42 daN/cm²	1,737 lbf/sq.ft
Maximum ground pressure on soft ground	3.4 daN/cm²	0.698 lbf/sq.ft	3.4 daN/cm²	0,698 lbf/sq.ft
Low drive speed	1.6 km/h	(0.99 mph)	1.6 km/h	(0.99 mph)
High drive speed	5,5 km/h	(3.42 mph)	5,5 km/h	(3.42 mph)
Platform elevation time (when empty)	31 s		31 s	
Platform lowering time (when empty)	27 s		27 s	
Tyre type and/ or size	26 x 12 - 16,5			
Manual lateral force at platform	CE - AS : 400 N - 90 lbf		ANSI - CSA : 850 N / 193 lbf	

https://truckmanualshub.com/

G - Technical characteristics

For COMPACT 12DX (COMPACT 3368RT) - Technical characteristics

Machine	COMPACT 12DX		COMPACT 3368RT	
Characteristics	Metric	Imperial	Metric	Imperial
Length of machine in stowed position	2,65 m	(8 ft8 in)	2,65 m	(8 ft8 in)
Overall width of machine	1.77 m	(5 ft10 in)	1.77 m	(5 ft10 in)
Machine height	2.55 m	(8 ft4 in)	2.55 m	(8 ft4 in)
Height when stowed	1.70 m	(5 ft7 in)	1.70 m	(5 ft7 in)
Maximum work height	12.15 m	(39 ft10 in)	12.15 m	(39 ft10 in)
Maximum platform height	10.15 m	(33 ft4 in)	10.15 m	(33 ft4 in)
Platform length	2.49 m	(8 ft2 in)	2.49 m	(8 ft2 in)
Platform width	1,54 m	(5 ft1 in)	1,54 m	(5 ft1 in)
Outer turning radius (without retracted axle adjustment)	3.50 m	(11 ft6 in)	3.50 m	(11 ft6 in)
Inner turning radius (with axles retracted)	1.25 m	(4 ft1 in)	1.25 m	(4 ft1 in)
Distance between centres of the wheels	1,87 m	(6 ft2 in)	1,87 m	(6 ft2 in)
Dumping CE - AS	3 °			
Rated slope ANSI - CSA			0 °	
Slope warning ANSI - CSA			2 °	
Maximum wind speed allowed	45 km/h	(28 mph)	45 km/h	(28 mph)
Total weight	4040 kg	(8908 lb)	4040 kg	(8908 lb)
Maximum platform load	450 kg	(1000 lb)	450 kg	(1000 lb)
Capacity when extended	150 kg	(330 lb)	150 kg	(330 lb)
Maximum number of people on the platform	3			
Maximum person on extension (refer to the capacity on extension recommended)	1			
Engine type	KUBOTA D1105-W1			
Engine power	18.5 kW (24.5 Hp)			
Engine power when idle	9 kW (12 Hp)			
Fuel consumption when idle	260 g/kWh			
Sound level at 10 m(32 ft9 in)	73 dB (A)			
Noise emission level	101 dB (A)			
Hand vibration	<2,5 m/s²	(98.4 in/s²)	<2,5 m/s²	(98.4 in/s²)
Feet vibration	<0,5 m/s²	(19.7 in/s²)	<0,5 m/s²	(19.7 in/s²)
Fuel tank capacity	30 l	(8 gal US)	30 l	(8 gal US)
Hydraulic oil tank capacity	75 l	(20 gal US)	75 l	(20 gal US)
Operating batteries	12 V-74 Ah			
Differential lock	Yes			
Maximum climbable slope	40 %			
Wheel nut torque	19 daN.m	(140 lbf.ft)	19 daN.m	(140 lbf.ft)
Maximum ground pressure on hard ground	6.1 daN/cm²	1,258 lbf/sq.ft	6.1 daN/cm²	1,258 lbf/sq.ft
Maximum ground pressure on soft ground	3.16 daN/cm²	0,649 lbf/sq.ft	3.16 daN/cm²	0,649 lbf/sq.ft
Low drive speed	1.6 km/h	(0.99 mph)	1.6 km/h	(0.99 mph)
High drive speed	5,5 km/h	(3,42 mph)	5,5 km/h	(3.42 mph)
Platform elevation time (when empty)	31 s			
Platform lowering time (when empty)	27 s			
Tyre type and/ or size	26 x 12 - 16,5			
Manual lateral force at platform	CE - AS : 400 N - 90 lbf		ANSI - CSA : 675 N / 149 lbf	

https://truckmanualshub.com/

G - Technical characteristics

For H12SX (HS3388RT) - Technical characteristics

Machine	H12SX		HS3388RT	
Characteristics	Metric	Imperial	Metric	Imperial
Length of machine in stowed position	4,18 m	(13 ft9 in)	4,18 m	(13 ft9 in)
Overall width of machine	2,25 m	(7 ft4 in)	2,25 m	(7 ft4 in)
Machine height	2,57 m	(8 ft5 in)	2,57 m	(8 ft5 in)
Maximum ground clearance	0,27 m	(0 ft10 in)	0,27 m	(0 ft10 in)
Maximum work height	12,00 m	(39 ft4 in)	12,00 m	(39 ft4 in)
Maximum platform height	10,00 m	(32 ft9 in)	10,00 m	(32 ft9 in)
Platform length	3,91 m	(12 ft10 in)	3,91 m	(12 ft10 in)
Platform width	1,89 m	(6 ft2 in)	1,89 m	(6 ft2 in)
Outer turning radius (without retracted axle adjustment)	4,96 m	(16 ft3 in)	4,96 m	(16 ft3 in)
Inner turning radius (with axles retracted)	1,54 m	(5 ft0 in)	1,54 m	(5 ft0 in)
Distance between centres of the wheels	2,75 m	(9 ft0 in)	2,75 m	(9 ft0 in)
Dumping CE - AS	5 °			
Rated slope ANSI - CSA			0 °	
Slope warning ANSI - CSA			2 °	
Total weight	5640 kg	(12436 lb)	5640 kg	(12436 lb)
Maximum platform load Option extension 1	900 kg	(1985 lb)	900 kg	(1985 lb)
Maximum platform load extension 2	700 kg	(1543,23 lb)	700 kg	(1543,23 lb)
Capacity when extended	200 kg	(441 lb)	200 kg	(441 lb)
Maximum number of people on the platform	Maximum 4 Section C 4.1.1Specific labels H12SX (HS3388RT)			
Engine type	Diesel - HATZ 2L41C			
Engine power	23,1 kW	(31 Hp)	23,1 kW	(31 Hp)
Engine power when idle	11,3 kW	(15 Hp)	11,3 kW	(15 Hp)
Maximum consumption	238 g/kWh			
Fuel consumption when idle	232 g/kWh			
Engine type	Diesel - PERKINS 403C15			
Engine power	22,3 kW	(30 Hp)	22,3 kW	(30 Hp)
Maximum consumption	260 g/kWh			
Fuel tank capacity	65 l	(17 gal US)	65 l	(17 gal US)
Hydraulic oil tank capacity	100 l	(26 gal US)	100 l	(26 gal US)
Operating batteries	12 V-95 Ah			
Differential lock	Yes			
Maximum climbable slope	40 %			
Tyre type and/ or size	Notched tires-10 x 16,5"			
Wheel nut torque	32 daN.m	(236 lbf.ft)	32 daN.m	(236 lbf.ft)
Maximum ground pressure on hard ground	11 daN/cm²	2,25 lbf/sq.ft	11 daN/cm²	2,25 lbf/sq.ft
Maximum ground pressure on soft ground	6,5 daN/cm²	1,33 lbf/sq.ft	6,5 daN/cm²	1,33 lbf/sq.ft
Low drive speed	1,6 km/h	(1 mph)	1,6 km/h	(1 mph)
Medium-speed driving	3,2 km/h	(2 mph)	3,2 km/h	(2 mph)
High drive speed	6 km/h	(3,7 mph)	6 km/h	(3,7 mph)
Platform elevation time (when empty)	43 s			
Platform lowering time (when empty)	65 s			
Sound level at 10 m(32 ft9 in)	69,7 dB (A)			
Noise emission level-HATZ	104 dB(A)			

https://truckmanualshub.com/

G - Technical characteristics

Machine	H12SX		HS3388RT	
Characteristics	Metric	Imperial	Metric	Imperial
Noise emission level-PERKINS	103dB(A)			
Hand vibration	<2,5 m/s²	(98 in/s²)	<2,5 m/s²	(98 in/s²)
Feet vibration	<0,5 m/s²	(19 in/s²)	<0,5 m/s²	(19 in/s²)
Manual lateral force at platform	CE - AS : 400 N - 90 lbf		ANSI - CSA : 1020 N / 231 lbf	

https://truckmanualshub.com/

G - Technical characteristics

For H15SX (HS4388RT) - Technical characteristics

Machine	H15SX		HS4388RT	
Characteristics	Metric	Imperial	Metric	Imperial
Length of machine in stowed position	4,18 m	(13 ft9 in)	4,18 m	(13 ft9 in)
Overall width of machine	2,25 m	(7 ft4 in)	2,25 m	(7 ft4 in)
Machine height	2,77 m	(9 ft1 in)	2,77 m	(9 ft1 in)
Maximum ground clearance	0,27 m	(0 ft10 in)	0,27 m	(0 ft10 in)
Maximum work height	15,00 m	(49 ft2 in)	15,00 m	(49 ft2 in)
Maximum platform height	13,00 m	(42 ft7 in)	13,00 m	(42 ft7 in)
Platform length	4,00 m	(13 ft1 in)	4,00 m	(13 ft1 in)
Platform width	1,89 m	(6 ft2 in)	1,89 m	(6 ft2 in)
Outer turning radius (without retracted axle adjustment)	4,96 m	(16 ft3 in)	4,96 m	(16 ft3 in)
Inner turning radius (with axles retracted)	1,54 m	(5 ft1 in)	1,54 m	(5 ft1 in)
Distance between centres of the wheels	2,75 m	(9 ft0 in)	2,75 m	(9 ft0 in)
Dumping CE - AS	5 °			
Rated slope ANSI - CSA			0 °	
Slope warning ANSI - CSA			2 °	
Maximum wind speed allowed	45 km/h	(28 mph)	45 km/h	(28 mph)
Total weight	6340 kg	(13980 lb)	6340 kg	(13980 lb)
Maximum platform load Option extension 1	700 kg	(1544 lb)	700 kg	(1544 lb)
Maximum platform load extension 2	500 kg	(1102,3 lb)	500 kg	(1102,3 lb)
Capacity when extended	200 kg	(441 lb)	200 kg	(441 lb)
Maximum number of people on the platform	Maximum 4 Section C 4.1.1Specific labels H12SX (HS3388RT)			
Engine type	Diesel - HATZ 2L41C			
Engine power	23,1 kW	(31 Hp)	23,1 kW	(31 Hp)
Engine power when idle	11,3 kW	(15 Hp)	11,3 kW	(15 Hp)
Maximum consumption	238 g/kWh			
Fuel consumption when idle	232 g/kWh			
Noise emission level	104 dB (A)			
Sound level at 10 m(32 ft9 in)	69,7 dB (A)			
Engine type	Diesel - PERKINS 403C15			
Engine power	22.3 kW	(30 Hp)	22.3 kW	(30 Hp)
Maximum consumption	260 g/kWh			
Noise emission level	104 dB (A)			
Sound level at 10 m(32 ft9 in)	69,7 dB (A)			
Fuel tank capacity	65 l	(17 gal US)	65 l	(17 gal US)
Hydraulic oil tank capacity	100 l	(26 gal US)	100 l	(26 gal US)
Operating batteries	12 V-95 Ah			
Differential lock	Yes			
Maximum climbable slope	40 %			
Tyre type and/ or size	Notched tires-10 x 16,5"			
Wheel nut torque	32 daN.m	(236 lbf.ft)	32 daN.m	(236 lbf.ft)
Maximum ground pressure on hard ground	12 daN/cm²	2,46 lbf/sq.ft	12 daN/cm²	2,46 lbf/sq.ft
Maximum ground pressure on soft ground	6,5 daN/cm²	1,33 lbf/sq.ft	6,5 daN/cm²	1,33 lbf/sq.ft
Low drive speed	1,6 km/h	(0,99 mph)	1,6 km/h	(0,99 mph)
High drive speed	6 km/h	(3,73 mph)	6 km/h	(3,73 mph)

https://truckmanualshub.com/

G - Technical characteristics

Machine	H15SX		HS4388RT	
Characteristics	Metric	Imperial	Metric	Imperial
Platform elevation time (when empty)	46 s			
Platform lowering time (when empty)	57 s			
Hand vibration	<2,5 m/s²	(98 in/s²)	<2,5 m/s²	(98 in/s²)
Feet vibration	<0,5 m/s²	(19 in/s²)	<0,5 m/s²	(19 in/s²)
Manual lateral force at platform	CE - AS : 400 N - 90 lbf		ANSI - CSA : 725 N / 165 lbf	

https://truckmanualshub.com/

G - Technical characteristics

For H18SX (HS5388RT) - Technical characteristics

Machine	H18SX		H18SX	
Characteristics	Metric	Imperial	Metric	Imperial
Length of machine in stowed position	4,18 m	(13 ft9 in)	4,18 m	(13 ft9 in)
Overall width of machine	2,25 m	(7 ft4 in)	2,25 m	(7 ft4 in)
Machine height	2,97 m	(9 ft8 in)	2,97 m	(9 ft8 in)
Maximum ground clearance	0,27 m	(0 ft10 in)	0,27 m	(0 ft10 in)
Maximum work height	18,00 m	(59 ft0 in)	18,00 m	(59 ft0 in)
Maximum platform height	16,00 m	(52 ft5 in)	16,00 m	(52 ft5 in)
Platform length	4,00 m	(13 ft1 in)	4,00 m	(13 ft1 in)
Platform width	1,89 m	(6 ft2 in)	1,89 m	(6 ft2 in)
Outer turning radius (without retracted axle adjustment)	4,96 m	(16 ft3 in)	4,96 m	(16 ft3 in)
Inner turning radius (with axles retracted)	1,54 m	(5 ft1 in)	1,54 m	(5 ft1 in)
Distance between centres of the wheels	2,75 m	(9 ft0 in)	2,75 m	(9 ft0 in)
Dumping CE - AS	3 °			
Rated slope ANSI - CSA			0 °	
Slope warning ANSI - CSA			2 °	
Maximum wind speed allowed	45 km/h	(28 mph)	45 km/h	(28 mph)
Total weight	7300 kg	(16093,7 lb)	7300 kg	(16093,7 lb)
Maximum platform load Option extension 1	600 kg	(1323 lb)	600 kg	(1323 lb)
Maximum platform load extension 2	500 kg	(1102,3 lb)	500 kg	(1102,3 lb)
Capacity when extended	200 kg	(441 lb)	200 kg	(441 lb)
Maximum number of people on the platform	Maximum 4 Section C 4.1.1Specific labels H12SX (HS3388RT)			
Engine type	Diesel - HATZ 2L41C			
Engine power	23,1 kW	(31 Hp)	23,1 kW	(31 Hp)
Engine power when idle	11,3 kW	(15 Hp)	11,3 kW	(15 Hp)
Maximum consumption	238 g/kWh			
Fuel consumption when idle	232 g/kWh			
Noise emission level	<104 dB (A)			
Sound level at 10 m(32 ft9 in)	<69,7 dB (A)			
Engine type	Diesel - PERKINS 403C15			
Engine power	22.3 kW	(30 Hp)	22.3 kW	(30 Hp)
Maximum consumption	260 g/kWh			
Noise emission level	<103 dB (A)			
Sound level at 10 m(32 ft9 in)	<72 dB (A)			
Fuel tank capacity	65 l	(17 gal US)	65 l	(17 gal US)
Hydraulic oil tank capacity	100 l	(26 gal US)	100 l	(26 gal US)
Operating batteries	12 V-95 Ah			
Differential lock	Yes			
Maximum climbable slope	40 %			
Tyre type and/ or size	Notched tires-10 x 16,5"			
Wheel nut torque	32 daN.m	(236 lbf.ft)	32 daN.m	(236 lbf.ft)
Maximum ground pressure on hard ground	16 daN/cm²	3,28 lbf/sq.ft	16 daN/cm²	3,28 lbf/sq.ft
Maximum ground pressure on soft ground	7,5 daN/cm²	1,54 lbf/sq.ft	7,5 daN/cm²	1,54 lbf/sq.ft
Low drive speed	1,6 km/h	(0,99 mph)	1,6 km/h	(0,99 mph)
High drive speed	6 km/h	(3,73 mph)	6 km/h	(3,73 mph)
Platform elevation time (when empty)	60 s			

https://truckmanualshub.com/

G - Technical characteristics

Machine	H18SX		H18SX	
Characteristics	Metric	Imperial	Metric	Imperial
Platform lowering time (when empty)	60 s			
Hand vibration	<2,5 m/s²	(98 in/s²)	<2,5 m/s²	(98 in/s²)
Feet vibration	<0,5 m/s²	(19 in/s²)	<0,5 m/s²	(19 in/s²)
Manual lateral force at platform	CE - AS : 400 N - 90 lbf		ANSI - CSA : 725 N / 165 lbf	

https://truckmanualshub.com/

G - Technical characteristics

For H12SXL (HS3388RTXL) - Technical characteristics

Machine	H12SXL		HS3388RTXL	
Characteristics	Metric	Imperial	Metric	Imperial
Length of machine in stowed position	5,3 m	(17 ft5 in)	5,3 m	(17 ft5 in)
Overall width of machine	2,25 m	(7 ft4 in)	2,25 m	(7 ft4 in)
Machine height	2,57 m	(8 ft5 in)	2,57 m	(8 ft5 in)
Maximum ground clearance	0,27 m	(0 ft10 in)	0,27 m	(0 ft10 in)
Maximum work height	12,00 m	(39 ft4 in)	12,00 m	(39 ft4 in)
Maximum platform height	10,00 m	(32 ft9 in)	10,00 m	(32 ft9 in)
Platform length	5,30 m	(17 ft4 in)	5,30 m	(17 ft4 in)
Platform width	1,89 m	(6 ft2 in)	1,89 m	(6 ft2 in)
Outer turning radius (without retracted axle adjustment)	6,20 m	(20 ft4 in)	6,20 m	(20 ft4 in)
Inner turning radius (with axles retracted)	2,00 m	(6 ft6 in)	2,00 m	(6 ft6 in)
Distance between centres of the wheels	2,75 m	(9 ft0 in)	2,75 m	(9 ft0 in)
Dumping CE - AS	2 °			
Rated slope ANSI - CSA			0 °	
Slope warning ANSI - CSA			2 °	
Maximum wind speed allowed	45 km/h	(28 mph)	45 km/h	(28 mph)
Total weight	5700 kg	(12566,3 lb)	5700 kg	(12566,3 lb)
Maximum platform load	700 kg	(1543,23 lb)	700 kg	(1543,23 lb)
Load capacity when extended	700 kg	(1543,23 lb)	700 kg	(1543,23 lb)
Maximum number of people on the platform	Maximum 4	Section C 4.1.1Specific labels H12SX (HS3388RT)		
Engine type	Diesel - HATZ 2L41C			
Engine power	24 kW	(32 Hp)	24 kW	(32 Hp)
Engine power when idle	15 kW	(20 Hp)	15 kW	(20 Hp)
Fuel consumption when idle	232 g/kWh			
Fuel tank capacity	65 l	(17 gal US)	65 l	(17 gal US)
Hydraulic oil tank capacity	100 l	(26 gal US)	100 l	(26 gal US)
Operating batteries	12 V-95 Ah			
Differential lock	Yes			
Maximum climbable slope	40 %			
Tyre type and/ or size	Solid tyres-10 x 16,5"			
Wheel nut torque	32 daN.m	(236 lbf.ft)	32 daN.m	(236 lbf.ft)
Maximum ground pressure on hard ground	9,2 daN/cm²	1,88 lbf/sq.ft	9,2 daN/cm²	1,88 lbf/sq.ft
Maximum ground pressure on soft ground	5,5 daN/cm²	1,13 lbf/sq.ft	5,5 daN/cm²	1,13 lbf/sq.ft
Low drive speed	1,6 km/h	(1 mph)	1,6 km/h	(1 mph)
High drive speed	6 km/h	(3,7 mph)	6 km/h	(3,7 mph)
Platform elevation time (when empty)	43 s			
Platform lowering time (when empty)	65 s			
Hand vibration	<2,5 m/s²	(98 in/s²)	<2,5 m/s²	(98 in/s²)
Feet vibration	<0,5 m/s²	(19 in/s²)	<0,5 m/s²	(19 in/s²)
Sound level at 10 m(32 ft9 in)	69,7 dB (A)			
Noise emission level	104 dB (A)			
Manual lateral force at platform	CE - AS : 400 N - 90 lbf		ANSI - CSA : 1020 N / 231 lbf	

https://truckmanualshub.com/

G - Technical characteristics

For H15SXL (HS4388RTXL) - Technical characteristics

Machine	H15SXL		HS4388RTXL	
Characteristics	Metric	Imperial	Metric	Imperial
Length of machine in stowed position	5,3 m	(17 ft5 in)	5,3 m	(17 ft5 in)
Overall width of machine	2,25 m	(7 ft4 in)	2,25 m	(7 ft4 in)
Machine height	2,77 m	(9 ft1 in)	2,77 m	(9 ft1 in)
Maximum ground clearance	0,27 m	(0 ft10 in)	0,27 m	(0 ft10 in)
Maximum work height	15,00 m	(49 ft2 in)	15,00 m	(49 ft2 in)
Maximum platform height	13,00 m	(42 ft7 in)	13,00 m	(42 ft7 in)
Platform length	5,30 m	(17 ft4 in)	5,30 m	(17 ft4 in)
Platform width	1,89 m	(6 ft2 in)	1,89 m	(6 ft2 in)
Outer turning radius (without retracted axle adjustment)	6,20 m	(20 ft4 in)	6,20 m	(20 ft4 in)
Inner turning radius (with axles retracted)	2,00 m	(6 ft6 in)	2,00 m	(6 ft6 in)
Distance between centres of the wheels	2,75 m	(9 ft0 in)	2,75 m	(9 ft0 in)
Dumping CE - AS	2 °			
Rated slope ANSI - CSA			0 °	
Slope warning ANSI - CSA			2 °	
Maximum wind speed allowed	45 km/h	(28 mph)	45 km/h	(28 mph)
Total weight	6530 kg	(14396,1 lb)	6530 kg	(14396,1 lb)
Maximum platform load	500 kg	(1102,3 lb)	500 kg	(1102,3 lb)
Load capacity when extended	500 kg	(1102,3 lb)	500 kg	(1102,3 lb)
Maximum number of people on the platform	Maximum 4 Section C 4.1.1Specific labels H12SX (HS3388RT)			
Engine type	Diesel - HATZ 2L41C			
Engine power	24 kW	(32 Hp)	24 kW	(32 Hp)
Engine power when idle	15 kW	(20 Hp)	15 kW	(20 Hp)
Fuel consumption when idle	232 g/kWh			
Fuel tank capacity	65 l	(17 gal US)	65 l	(17 gal US)
Hydraulic oil tank capacity	100 l	(26 gal US)	100 l	(26 gal US)
Operating batteries	12 V-95 Ah			
Differential lock	Yes			
Maximum climbable slope	40 %			
Tyre type and/ or size	Solid tyres-10 x 16,5"			
Wheel nut torque	32 daN.m	(236 lbf.ft)	32 daN.m	(236 lbf.ft)
Maximum ground pressure on hard ground	9,2 daN/cm²	1,88 lbf/sq.ft	9,2 daN/cm²	1,88 lbf/sq.ft
Maximum ground pressure on soft ground	5,5 daN/cm²	1,13 lbf/sq.ft	5,5 daN/cm²	1,13 lbf/sq.ft
Low drive speed	1,6 km/h	(1 mph)	1,6 km/h	(1 mph)
High drive speed	6 km/h	(3,7 mph)	6 km/h	(3,7 mph)
Platform elevation time (when empty)	46 s			
Platform lowering time (when empty)	57 s			
Hand vibration	<2,5 m/s²	(98 in/s²)	<2,5 m/s²	(98 in/s²)
Feet vibration	<0,5 m/s²	(19 in/s²)	<0,5 m/s²	(19 in/s²)
Sound level at 10 m(32 ft9 in)	66,69,7 dB (A)			
Noise emission level	104 dB (A)			
Manual lateral force at platform	CE - AS : 400 N - 90 lbf		ANSI - CSA : 725 N / 165 lbf	

https://truckmanualshub.com/

G - Technical characteristics

For H18SXL (HS5388RTXL) - Technical characteristics

Machine	H18SXL		HS5388RTXL	
Characteristics	Metric	Imperial	Metric	Imperial
Length of machine in stowed position	5,3 m	(17 ft5 in)	5,3 m	(17 ft5 in)
Overall width of machine	2,25 m	(7 ft4 in)	2,25 m	(7 ft4 in)
Machine height	2,97 m	(9 ft8 in)	2,97 m	(9 ft8 in)
Maximum ground clearance	0,27 m	(0 ft10 in)	0,27 m	(0 ft10 in)
Maximum work height	18,00 m	(59 ft0 in)	18,00 m	(59 ft0 in)
Maximum platform height	16,00 m	(52 ft5 in)	16,00 m	(52 ft5 in)
Platform length	5,30 m	(17 ft4 in)	5,30 m	(17 ft4 in)
Platform width	1,89 m	(6 ft2 in)	1,89 m	(6 ft2 in)
Outer turning radius (without retracted axle adjustment)	6,20 m	(20 ft4 in)	6,20 m	(20 ft4 in)
Inner turning radius (with axles retracted)	2,00 m	(6 ft6 in)	2,00 m	(6 ft6 in)
Distance between centres of the wheels	2,75 m	(9 ft0 in)	2,75 m	(9 ft0 in)
Dumping CE - AS	2 °			
Rated slope ANSI - CSA			0 °	
Slope warning ANSI - CSA			2 °	
Maximum wind speed allowed	45 km/h	(28 mph)	45 km/h	(28 mph)
Total weight	7490 kg	(16512,6 lb)	7490 kg	(16512,6 lb)
Maximum platform load	500 kg	(1102,3 lb)	500 kg	(1102,3 lb)
Load capacity when extended	500 kg	(1102,3 lb)	500 kg	(1102,3 lb)
Maximum number of people on the platform	Maximum 4 Section C 4.1.1Specific labels H12SX (HS3388RT)			
Engine type	Diesel - HATZ 2L41C			
Engine power	24 kW	(32 Hp)	24 kW	(32 Hp)
Engine power when idle	15 kW	(20 Hp)	15 kW	(20 Hp)
Fuel consumption when idle	232 g/kWh			
Fuel tank capacity	65 l	(17 gal US)	65 l	(17 gal US)
Hydraulic oil tank capacity	100 l	(26 gal US)	100 l	(26 gal US)
Operating batteries	12 V-95 Ah			
Differential lock	Yes			
Maximum climbable slope	40 %			
Tyre type and/ or size	Solid tyres-10 x 16,5"			
Wheel nut torque	32 daN.m	(236 lbf.ft)	32 daN.m	(236 lbf.ft)
Maximum ground pressure on hard ground	9,6 daN/cm²	1.97 lbf/sq.ft	9,6 daN/cm²	1.97 lbf/sq.ft
Maximum ground pressure on soft ground	5,7 daN/cm²	1,17 lbf/sq.ft	5,7 daN/cm²	1,17 lbf/sq.ft
Low drive speed	1,6 km/h	(1 mph)	1,6 km/h	(1 mph)
High drive speed	6 km/h	(3,7 mph)	6 km/h	(3,7 mph)
Platform elevation time (when empty)	60 s			
Platform lowering time (when empty)	60 s			
Hand vibration	<2,5 m/s²	(98 in/s²)	<2,5 m/s²	(98 in/s²)
Feet vibration	<0,5 m/s²	(19 in/s²)	<0,5 m/s²	(19 in/s²)
Sound level at 10 m(32 ft9 in)	69,7 dB (A)			
Noise emission level	104 dB (A)			
Manual lateral force at platform	CE - AS : 400 N - 90 lbf		ANSI - CSA : 725 N / 165 lbf	

https://truckmanualshub.com/

2 - Overall dimensions

General diagram COMPACT 10DX (COMPACT 2668RT) -COMPACT 12DX (COMPACT 3368RT)

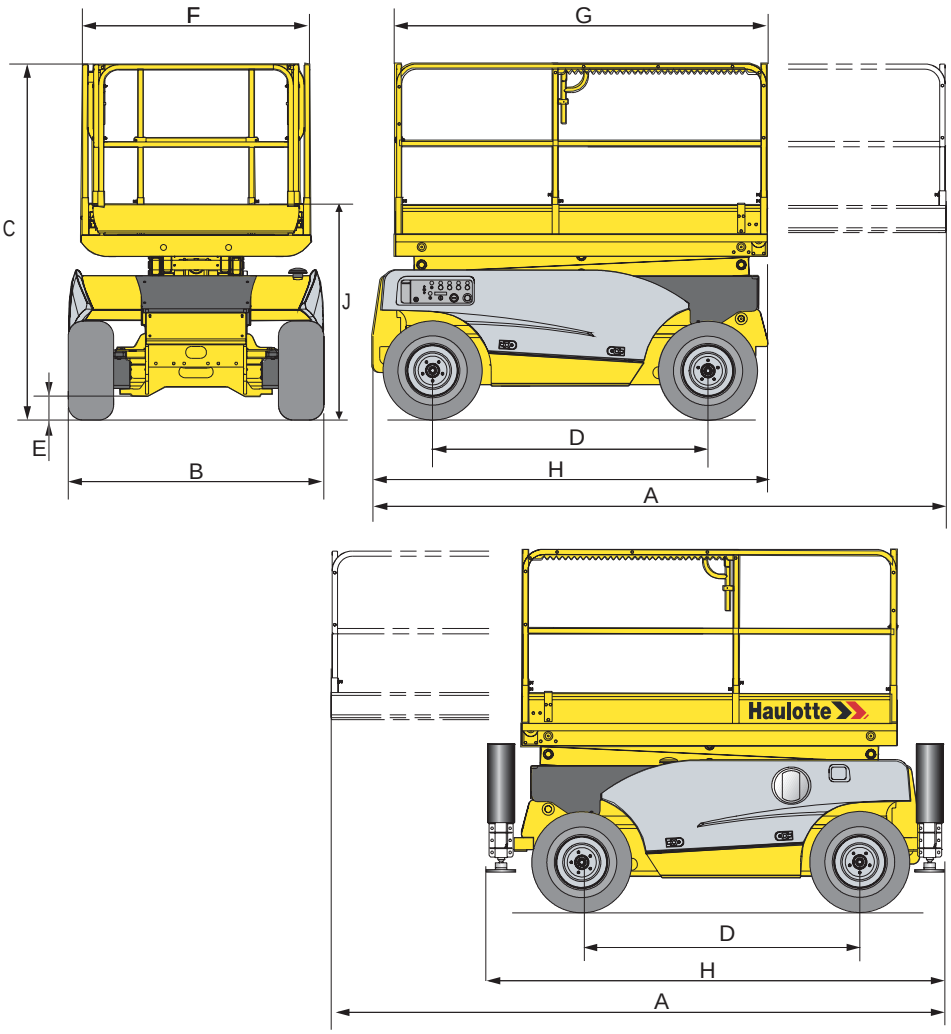

Overall dimension specifications

Marking	COMPACT 10DX (COMPACT 2668RT)		COMPACT 12DX (COMPACT 3368RT)	
	Mètre	Feet inch	Mètre	Feet inch
A	3.70	12 ft 2 in	3.70	12 ft 2 in
B	1.77	5 ft 10 in	1.77	5 ft 10 in
C	2.43	8 ft 0 in	2.55	8 ft 4 in
D	1,87	6 ft 2 in	1,87	6 ft 2 in
E	0.15	0 ft 6 in	0.15	0 ft 6 in
F x G	2,49 x 1,54	8 ft 2 in x 5 ft 1 in	2.49 x 1.54	8 ft 2 in x 5 ft 1 in
H	3.17	10 ft 5 in	3.17	10 ft 5 in
J	1.57	5 ft 2 in	1.70	5 ft 7 in

https://truckmanualshub.com/

General diagram H12SX (HS3388RT) -H15SX (HS4388RT) -H18SX (HS5388RT)

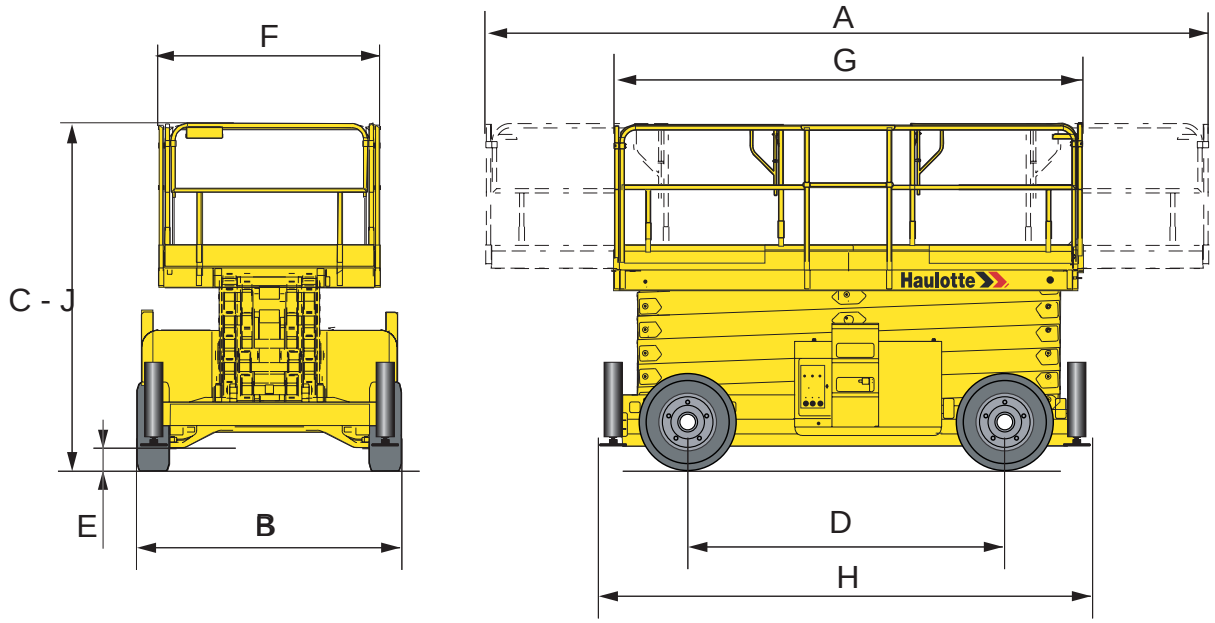

Overall dimension specifications

Marking	H12SX (HS3388RT)		H15SX (HS4388RT)	
	Mètre	Feet inch	Mètre	Feet inch
A	6,00	19 ft 8 in	6,00	19 ft 8 in
B	2,25	7 ft 4 in	2,25	7 ft 4 in
C	2,57	8 ft 5 in	2,77	9 ft 1 in
D	2,75	9 ft 0 in	2,75	9 ft 0 in
E	0,27	0 ft 10 in	0,27	0 ft 10 in
F x G	4,00 x 1,89	13 ft 1 in x 6 ft 2 in	4,00 x 1,89	13 ft 1 in x 6 ft 2 in
H	4,18	13 ft 8 in	4,18	13 ft 8 in
J	2,57	8 ft 5 in	2,77	9 ft 1 in

Overall dimension specifications

Marking	H18SX (HS5388RT)	
	Mètre	Feet inch
A	6,00	19 ft 8 in
B	2,25	7 ft 4 in
C	2,97	9 ft 8 in
D	2,75	9 ft 0 in
E	0,27	0 ft 10 in
F x G	4,00 x 1,89	13 ft 1 in x 6 ft 2 in
H	4,18	13 ft 8 in
J	2,97	9 ft 8 in

https://truckmanualshub.com/

General diagram H12SXL (HS3388RTXL) -H15SXL (HS4388RTXL) -H18SXL (HS5388RTXL)

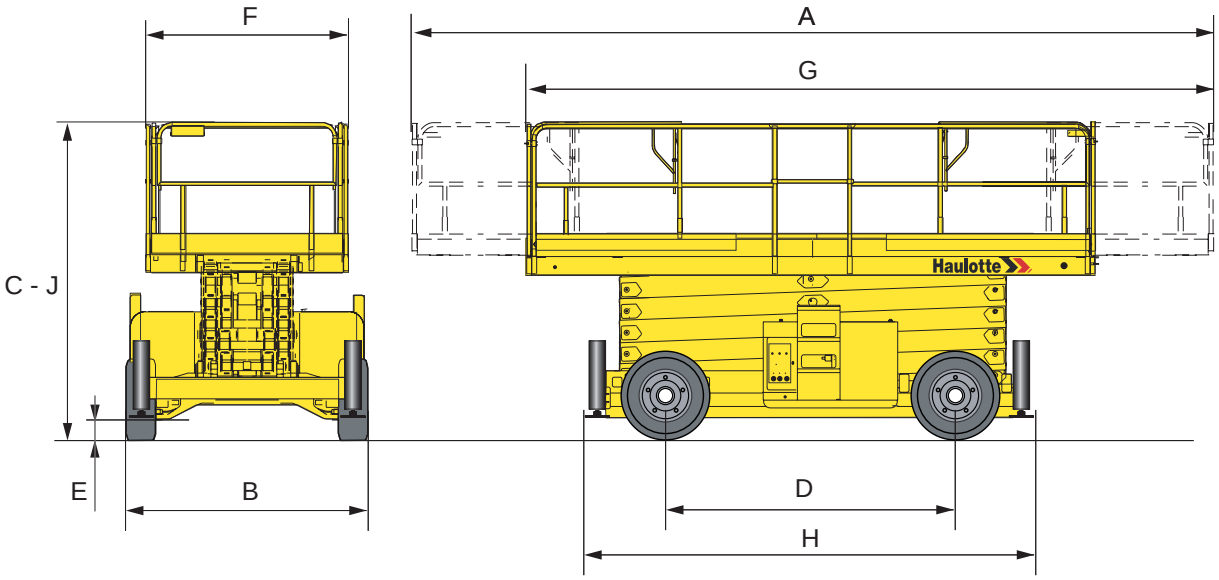

Overall dimension specifications

Marking	H12SXL (HS3388RTL)		H15SXL (HS4388RTL)	
	Mètre	Feet inch	Mètre	Feet inch
A	7,30	23 ft 11 in	7,30	23 ft 11 in
B	2,25	7 ft 4 in	2,25	7 ft 4 in
C	2,57	8 ft 5 in	2,77	9 ft 1 in
D	2,75	9 ft 0 in	2,75	9 ft 0 in
E	0,27	0 ft 10 in	0,27	0 ft 10 in
F x G	5,30 x 1,89	17 ft 4 in x 6 ft 2 in	5,30 x 1,89	17 ft 4 in x 6 ft 2 in
H	4,18	13 ft 8 in	4,18	13 ft 8 in
J	2,57	8 ft 5 in	2,77	9 ft 1 in

Overall dimension specifications

Marking	H18SXL (HS5388RTL)	
	Mètre	Feet inch
A	7,30	23 ft 11 in
B	2,25	7 ft 4 in
C	2,97	9 ft 8 in
D	2,75	9 ft 0 in
E	0,27	0 ft 10 in
F x G	5,30 x 1,89	17 ft 4 in x 6 ft 2 in
H	4,18	13 ft 8 in
J	2,97	9 ft 8 in

https://truckmanualshub.com/

3 - Working area

3.1 - MACHINE COMPACT 10DX (COMPACT 2668RT)

Working area

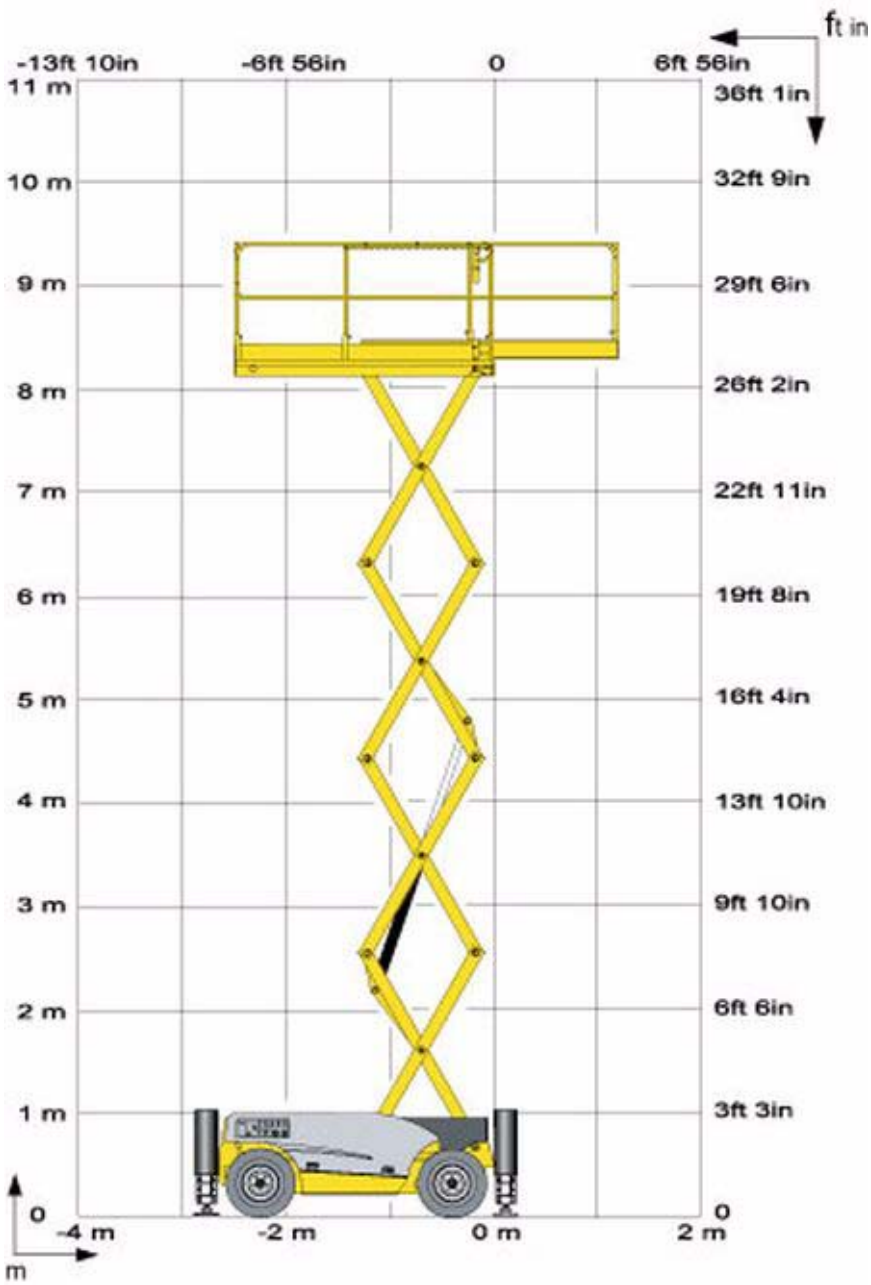

https://truckmanualshub.com/

3.2 - MACHINE COMPACT 12DX (COMPACT 3368RT)

Working area

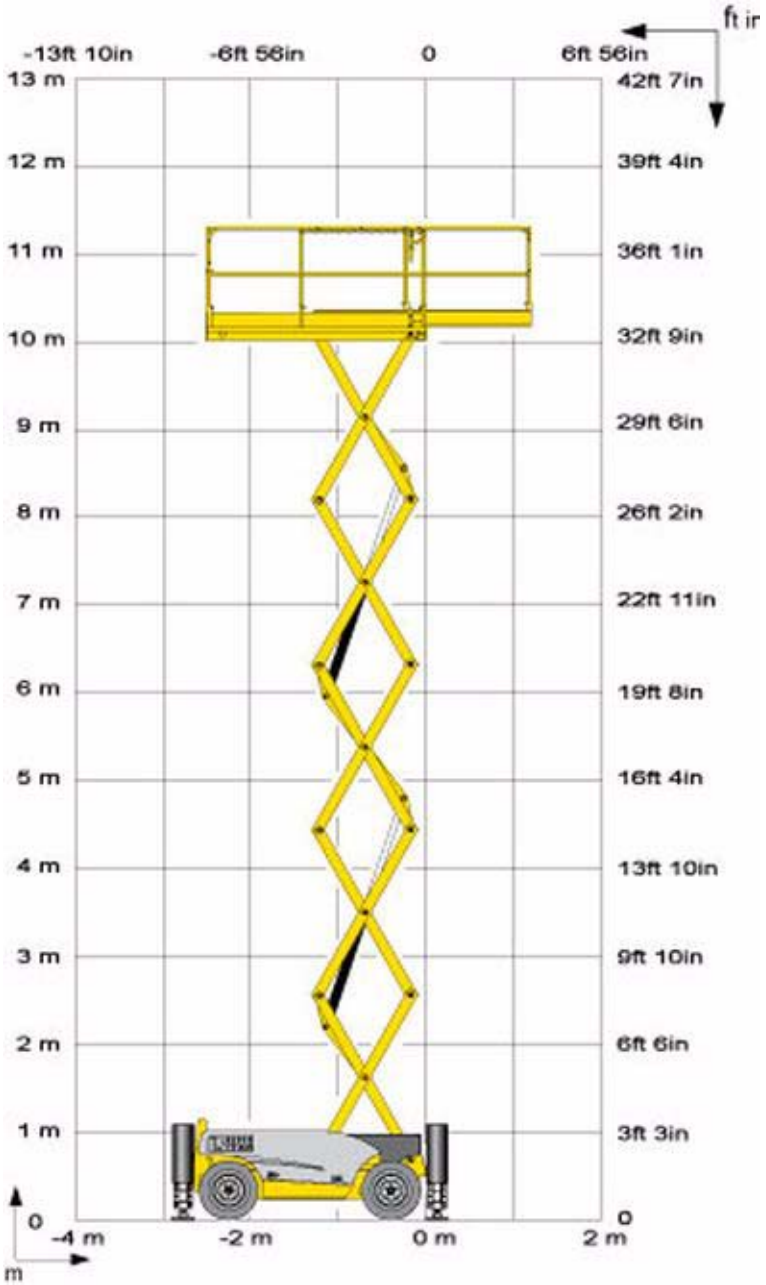

https://truckmanualshub.com/

3.3 - MACHINE H12SX (HS3388RT)

Working area

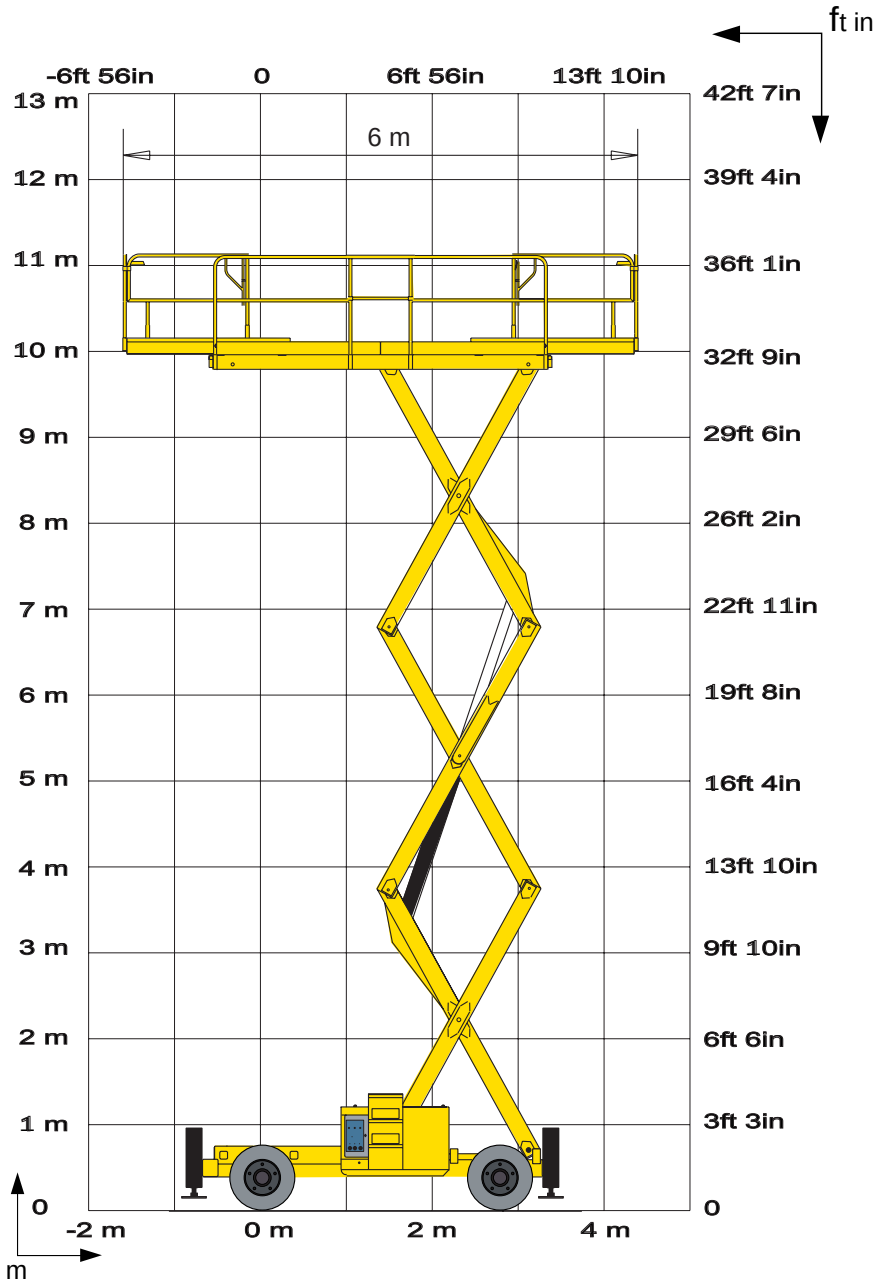

https://truckmanualshub.com/

3.4 - MACHINE H15SX (HS4388RT)

Working area

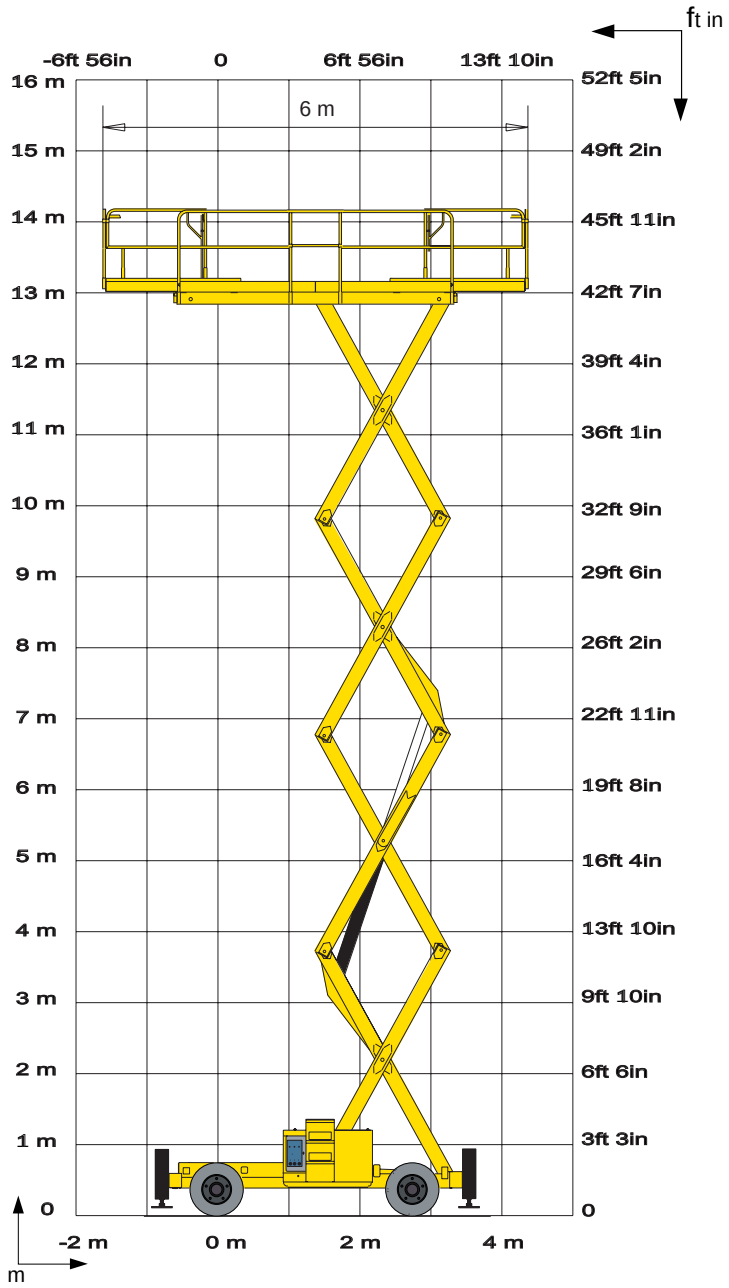

https://truckmanualshub.com/

3.5 - MACHINE H18SX (HS5388RT)

Working area

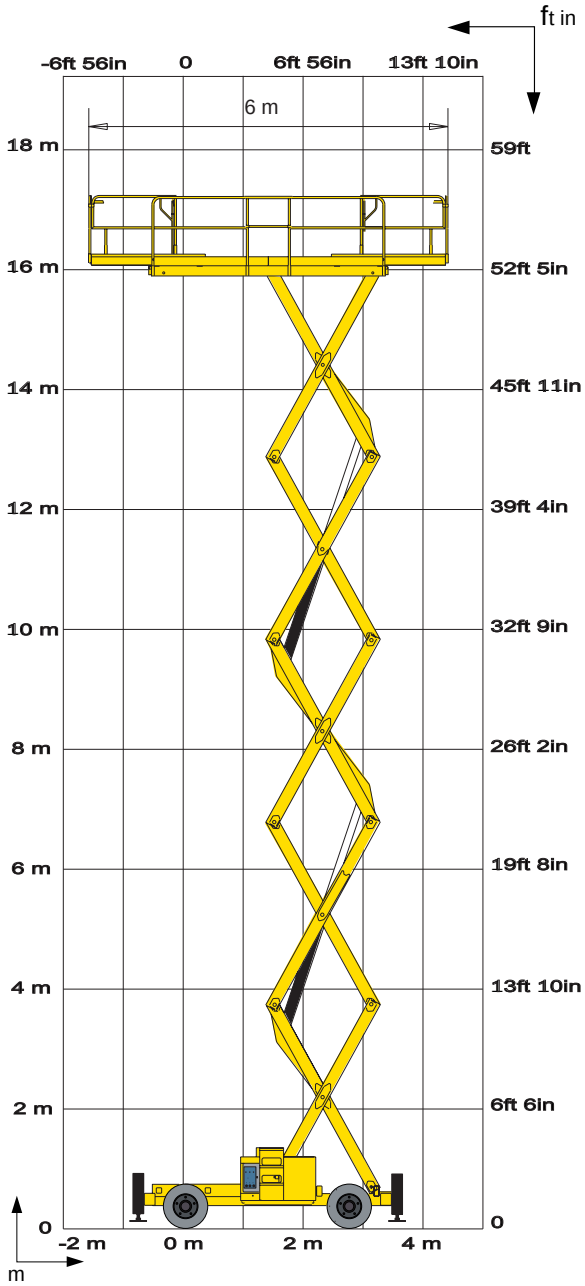

https://truckmanualshub.com/

3.6 - MACHINE H12SXL (HS3388RTXL)

Working area

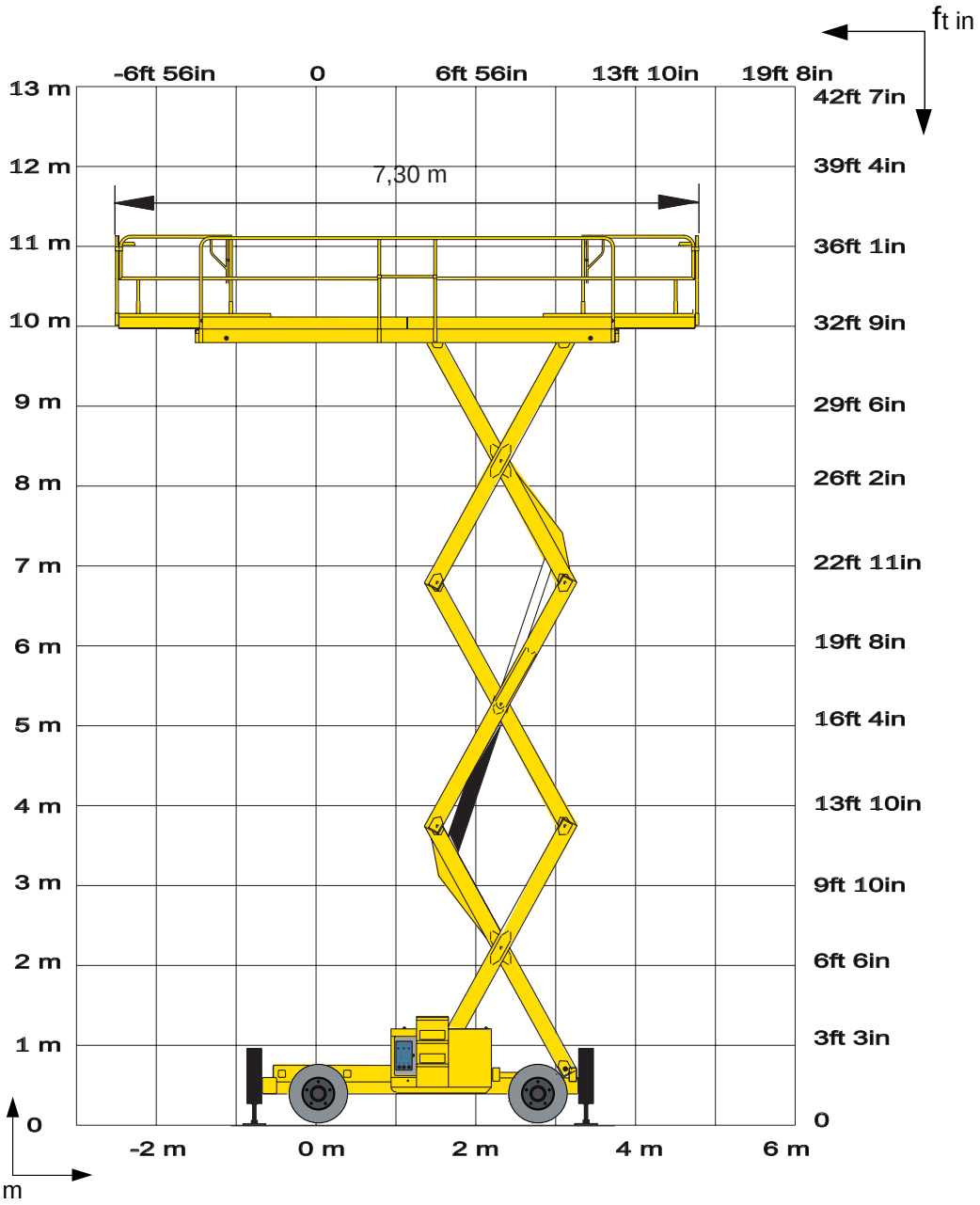

https://truckmanualshub.com/

3.7 - MACHINE H15SXL (HS4388RTL)

Working area

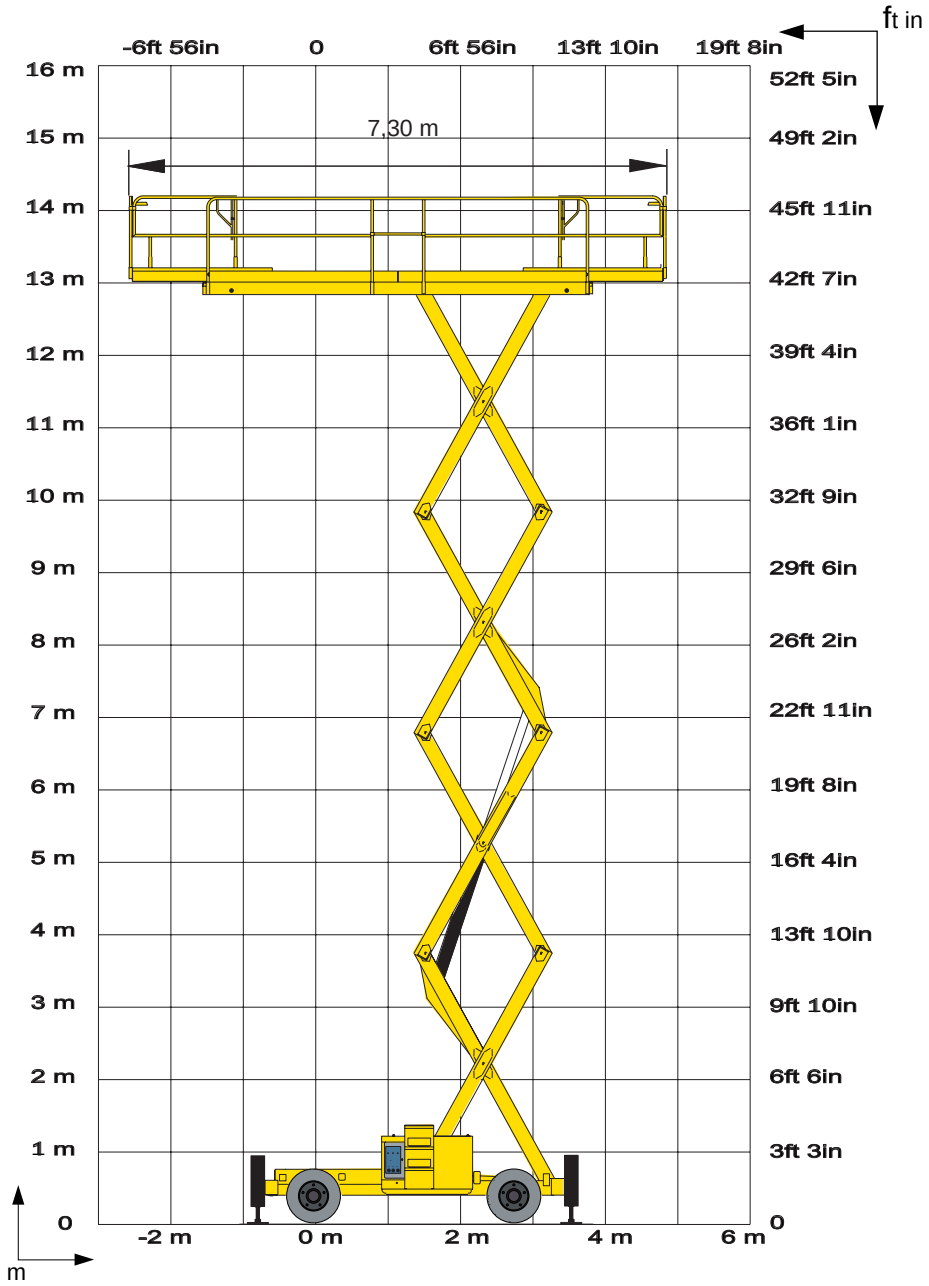

https://truckmanualshub.com/

3.8 - MACHINE H18SXL (HS5388RTXL)

Working area

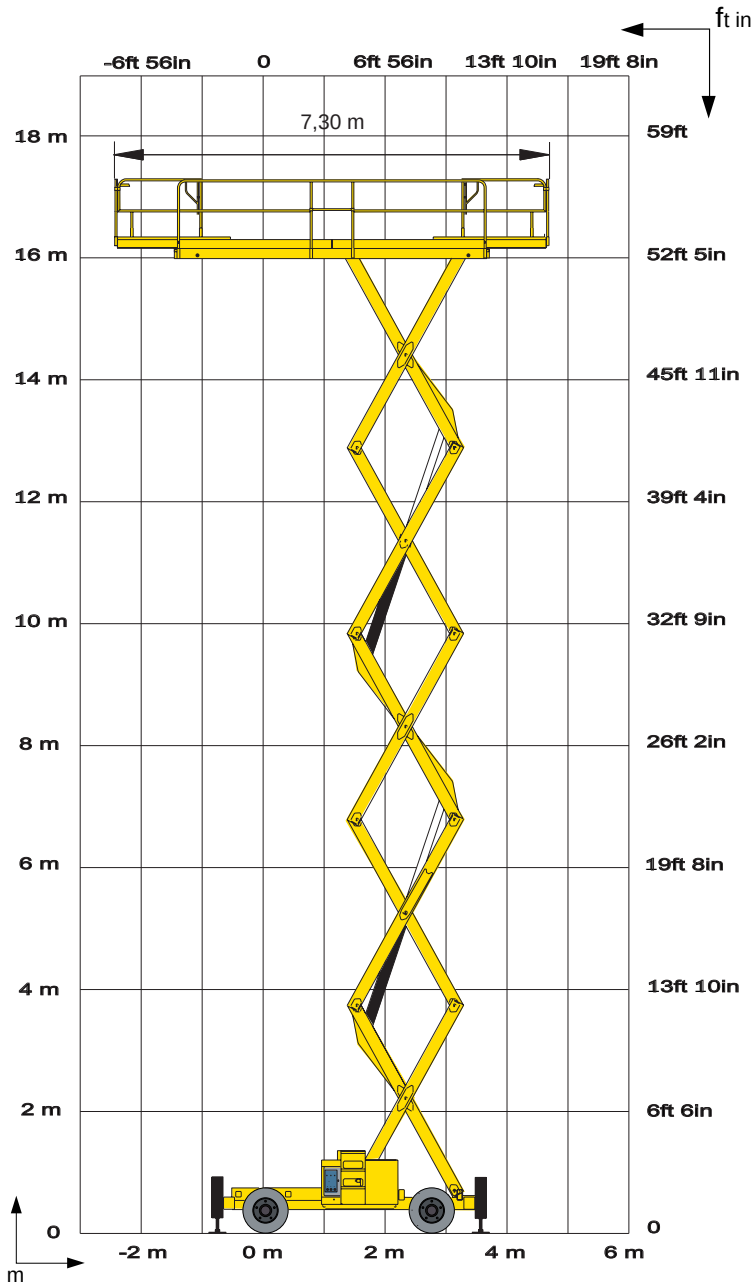

https://truckmanualshub.com/

4 - AS - CE standard specificities

The following tests must be performed after :

- A major technical intervention.
- An accident due to major component failure on the machine.

• The following tests must be performed by a qualified person in secure conditions.

• The results must be fully recorded.

To avoid the machine tipping over, it must be secured during the test (by a chain or anchorage point).

4.1 - OVERLOAD TEST

The overload test is performed with 125 % of the nominal load. See paragraph 1.12.3 of the AS1418.10 standard for test details.

Load table

Machine	Test load	
	Pound (lb)	Kilogramme (kg)
COMPACT 10DX (COMPACT 2668RT)	1557	706,25
COMPACT 12DX (COMPACT 3368RT)	1240,1	562,50
H12SX(L) (HS3388RT(XL))	1929	875
H15SX(L) (HS4388RT(XL)) H18SX(L) (HS3388RT(XL))	1377,8	625

The machine must not show any signs of permanent distortion.

Tests are performed by a qualified person under optimal conditions and results must be fully recorded.

4.2 - FUNCTIONAL TEST

Functional tests have confirmed the following: :

- The machine has performed all movements without jerking, while carrying the nominal load.
- All security systems are operating correctly.
- Maximum authorized operating speeds are not exceeded.

https://truckmanualshub.com/

4.3 - STABILITY TEST

The stability test proves that the machine is stable in an unfavourable position. The moment when the machine tips is calculated by combining loads in the machine's most unfavourable position (load W applied over distance L).

Stability for COMPACT 10/12DX (COMPACT 2668/3368RT)

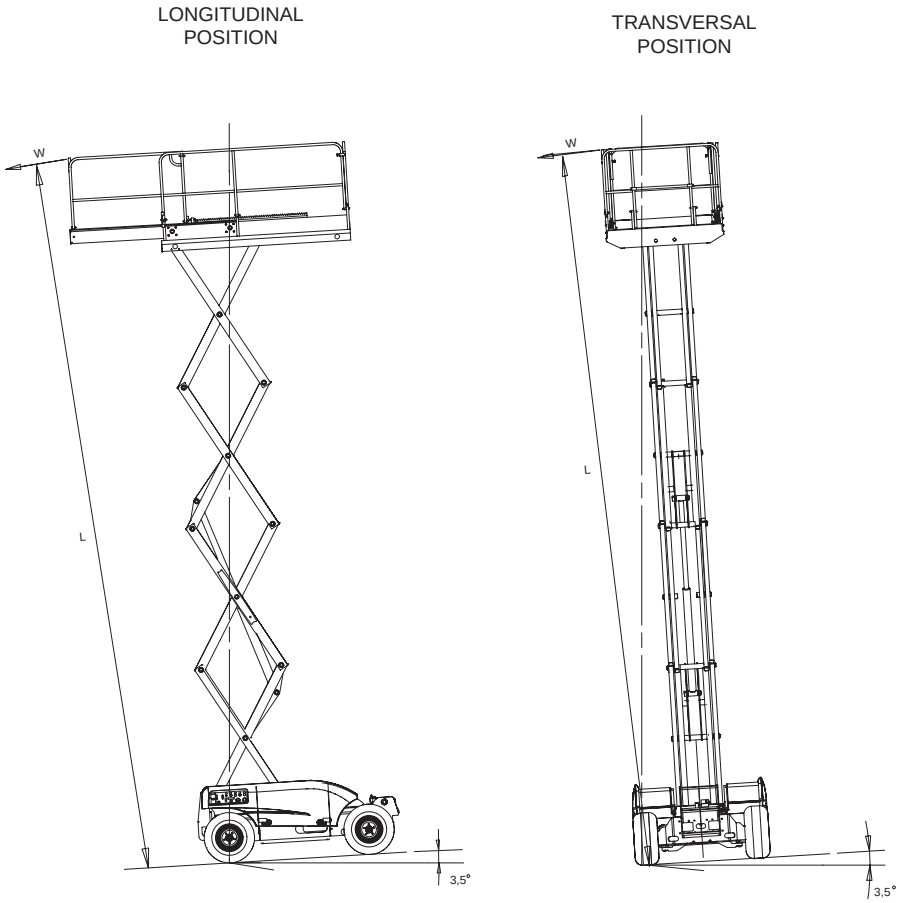

Stability table for COMPACT 10DX (COMPACT 2668RT)

	T (°)	W		L		Moment of tipping over
		Pound (lb)	Kilogramme (kg)	Feet inch (ft in)	Mètre (m)	Déca Newton Mètre (DaN.m)
Horizontal (1)	3,5	362	164	31-9	9,70	1592
Vertical (2)	3,5	311.5	141.5	31-5	9,60	1356

Stability table for COMPACT 12DX (COMPACT 3368RT)

	T (°)	W		L		Moment of tipping over
		Pound (lb)	Kilogramme (kg)	Feet inch (ft in)	Mètre (m)	Déca Newton Mètre (DaN.m)
Horizontal (1)	3,5	340	154	37-8	11,50	1772
Vertical (2)	3,5	304	138	37-4	11,40	1582

https://truckmanualshub.com/

Stability for H12/15/18SX(L) (HS3388/4388/5388RT(XL))

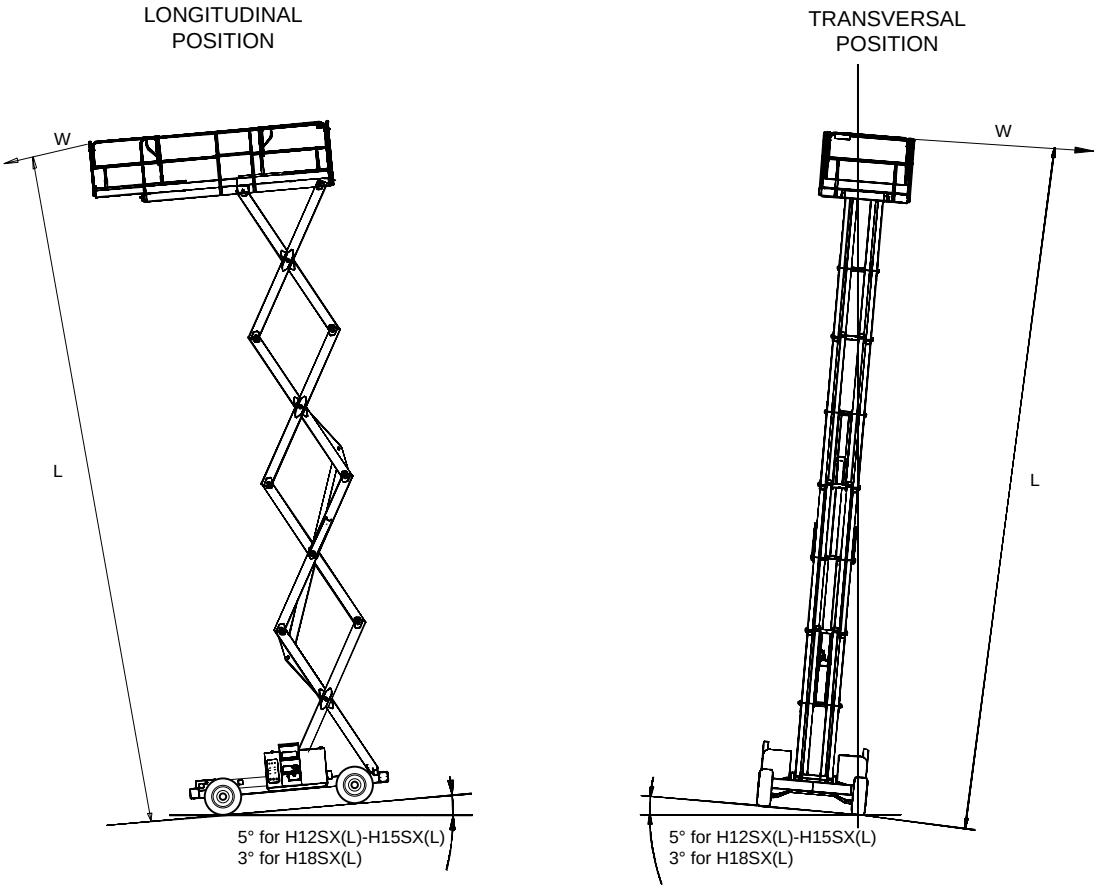

Stability table for H12SX (HS 3388RT)

	T (°)	W		L		Moment of tipping over
		Pound (lb)	Kilogramme (kg)	Feet inch (ft in)	Mètre (m)	Déca Newton Mètre (DaN.m)
Horizontal (1)	5,5	560	254	36-6	11,13	2831
Vertical (2)	5,5	463	210	36-4	11,09	2332

Stability table for H15SX (HS 4388RT)

	T (°)	W		L		Moment of tipping over
		Pound (lb)	Kilogramme (kg)	Feet inch (ft in)	Mètre (m)	Déca Newton Mètre (DaN.m)
Horizontal (1)	5,5	525	238	45-10	13,97	3326
Vertical (2)	5,5	461	209	46-1	14,06	2942

https://truckmanualshub.com/

Stability table for H18SX (HS 5388RT)

	T (°)	W		L		Moment of tipping over
		Pound (lb)	Kilogramme (kg)	Feet inch (ft in)	Mètre (m)	Déca Newton Mètre (DaN.m)
Horizontal (1)	3,5	494	224	56-1	17,10	3842
Vertical (2)	3,5	454	206	56-2	17,12	3530

Stability table for H12SXL (HS3388RTXL)

	T (°)	W		L		Moment of tipping over
		Pound (lb)	Kilogramme (kg)	Feet inch (ft in)	Mètre (m)	Déca Newton Mètre (DaN.m)
Horizontal (1)	2,5	670	304	36-9	11,2	3378
Vertical (2)	2,5	401	182	36-9	11,2	2038

Stability table for H15SXL (HS4388RTXL)

	T (°)	W		L		Moment of tipping over
		Pound (lb)	Kilogramme (kg)	Feet inch (ft in)	Mètre (m)	Déca Newton Mètre (DaN.m)
Horizontal (1)	2,5	547	248	46-7	14,2	3523
Vertical (2)	2,5	419	190	46-7	14,2	2699

Stability table for H18SXL (HS5388RTXL)

	T (°)	W		L		Moment of tipping over
		Pound (lb)	Kilogramme (kg)	Feet inch (ft in)	Mètre (m)	Déca Newton Mètre (DaN.m)
Horizontal (1)	2,5	540	245	56-5	17,2	4230
Vertical (2)	2,5	450	204	56-5	17,2	3510

See paragraph 1.12.2 of the AS1418.10 standard for test details.

The machine must return to a stable state without tipping over.

https://truckmanualshub.com/

5 - Declaration of conformity

CE Declarations of Conformity only apply to machines that are certified for the European market.

Declaration of conformity - Thermal platforms

DECLARATION DE CONFORMITE CE

(certificate of conformity with EC directives)

Nom et adresse du constructeur ou son représentant autorisé dans la communauté :
Name and address of manufacturer or their authorised agents within the European Community

HAULOTTE Group Siège Social
La Péronnière
BP 09
42152 L'HORME Cedex
FRANCE

HAULOTTE GROUP
Usine de _____
_____
_____
_____

Déclare que la machine décrite ci-dessous :
(Declares that the technical installation described below)

Nacelle ou Plate-forme mobile élévatrice de personnes
(Elevating work Platform)

Machine au nom commercial *(Machine with the commercial name)* _____,
Conforme au type *(in compliance with the type)* _____
Numéro de série *(Serial number)*: _____

Se conforme aux dispositions de la directive machine 2006/42/CE.
(Conforms to the provisions set out in the EC Machinery Directive 2006/42/EC)

N° de certificat *(Certificate no)*: _____ _____ ___ __ __ _____

Cette machine est identique au modèle ayant fait l'objet d'un examen CE de type par l'organisme notifié :
(This machinery is identical to the model that was tested in an EC type-examination by the appointed body)

Organisme certifié (*Authorised certification body*) :

_____ n° ___
_____
_____

- Se conforme également aux dispositions de la directive 2000/14/CE concernant l'émission de bruit par l'équipement dans l'environnement en utilisation extérieure
  (is also in accordance with the clauses contained in the EC Outdoor Noise Directive (2000/14/EC))
  - Méthode de mesure (*Measuring methods)* — Annexe III-B
  - LwA, Niveau de puissance acoustique garantie (*LWA, sound level guaranteed)* — ___ dB
  - LwA, Niveau de puissance acoustique minimum/maximum (*LWA, maxi sound level)* — ___/___ dB

- Se conforme également aux dispositions de la directive 2004/108/CE concernant la compatibilité électromagnétique.
  (is in accordance with the provisions contained in EEC Directive no. 2004/108/CE on electromagnetic compatibility)

- Se conforme aux principales exigences des normes harmonisées suivantes : EN 280 et EN 954.
  (also fulfils the principal requirements of the following harmonised standards: EN 280 and EN 954)

Fait à L'Horme le : ……

_____
Directeur Division _____ */Managing Director,* _____ *Division*

Signature

Cette déclaration est conforme aux exigences de l'annexe II-a de la directive 2006/42/CE. Toute modification de la machine décrite ci-dessus rendrait cette déclaration caduque.
This declaration conforms with the requirements of annex II-A of the directive 2006/42/EEC.Any modification to the above described machine violates the validity of this declaration.

https://truckmanualshub.com/

1 - Intervention register

In order to benefit from the HAULOTTE® guarantee, each maintenance or repair operation must be entered in the INTERVENTION REGISTER, which can be found at the end of the maintenance book delivered with your machine.

Intervention register

Haulotte GROUP

H - REGISTRE D'INTERVENTION

REGISTRE D'INTERVENTION HAULOTTE SERVICE				
Date	Nature de l'intervention	Nbre heures	Intervenant	N° intervention Haulotte service

MODELE

https://truckmanualshub.com/

H - Intervention register