https://truckmanualshub.com/

MICHIGAN

PARTS MANUAL

No. 2814
MODEL 275-B
Articulated
TRACTOR SHOVEL

Information contained herein pertains to Machine Serial Numbers listed below: 275B CUMMINS — 425A101 and After

Record Your Machine Serial Number Here

_____

CLARK EQUIPMENT COMPANY

7.5C728B

Printed in U.S.A.

https://truckmanualshub.com/

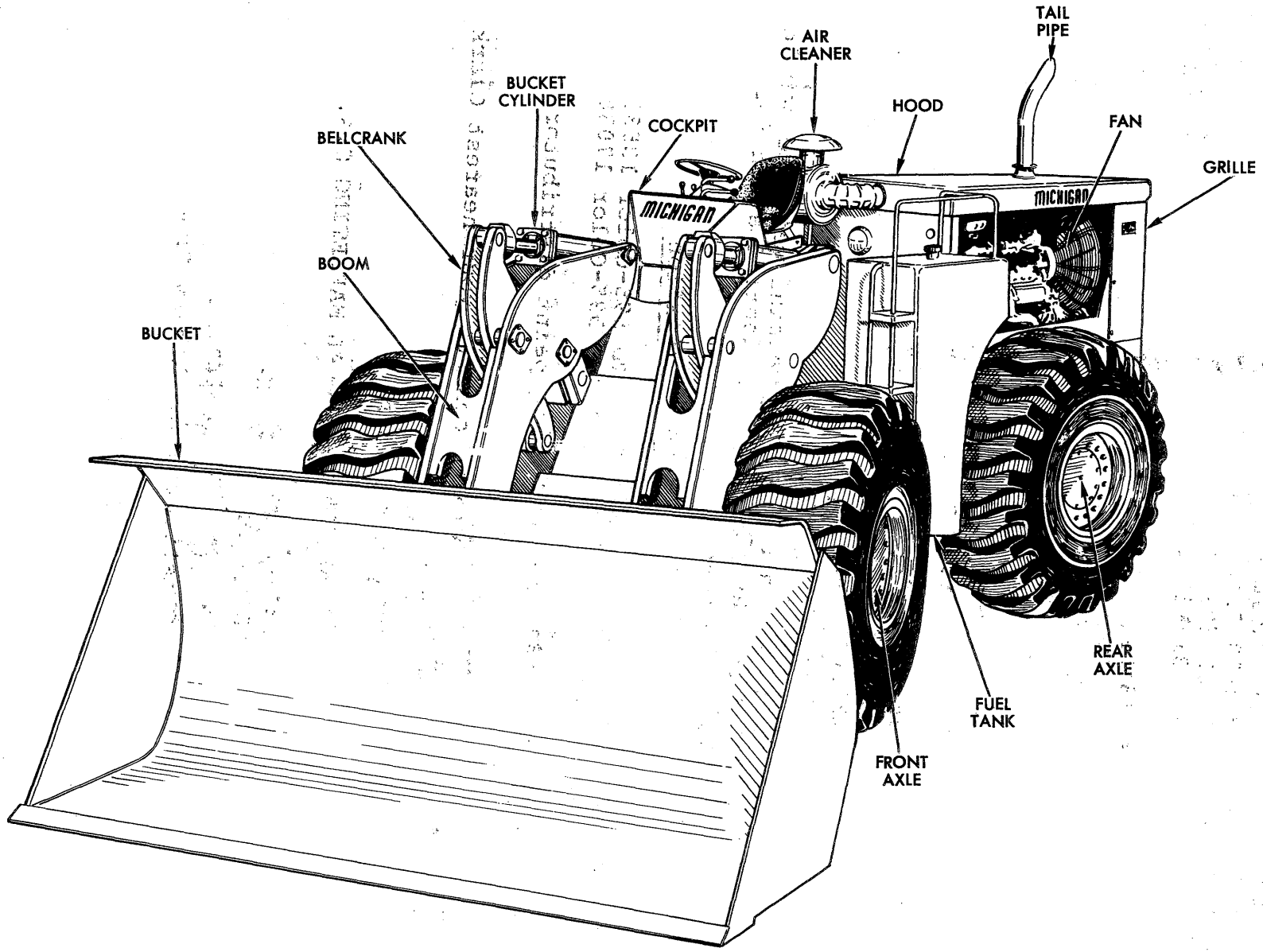

MODEL 275B ARTICULATED TRACTOR SHOVEL

TS-11045

https://truckmanualshub.com/

275B	2513352 (Clark)	2
	2513628 (Clark) (Front)	1
	2513638 (275B)	2
	2513631 (Michigan)	2
475	2513632 (Michigan)	2
	2513628 (Clark) (Front)	1
	2513639 (475B)	2
280	2513351 (Clark)	2
	2513628 (Clark) (Front)	1
	2513641 (280)	2
	2513629 (Michigan)	2
380	2513351 (Clark)	2
	2513628 (Clark) (Front)	1
	2513642 (380)	2
	2513631 (Michigan)	2

Paint Color: Must be a uniform and tight commercial match to sample of the required color. Color designation and identification for samples of color shall be as follows:

Designation	Identification
MS230 Yellow	FED STD 595-Color 13538
MS230 Black	FED STD 595-Color 17038

We will from time to time release brand name paint distributor for your use.

If you have any further questions please contact your nearest Clark International Service Department.

Very truly yours,

CLARK INTERNATIONAL MARKETING S.A.

C. J. Lynn
Service Administrator
Construction Machinery Group

https://truckmanualshub.com/

WHEN ORDERING REPAIR PARTS

To assure the best results and to maintain the original quality built into the machine it is important that only Clark-Approved Parts be used when new parts are required.

IMPORTANT: Always furnish the distributor with the machine serial number when ordering parts.

Order through your nearest Clark Distributor, for THE MICHIGAN LINE.

Always give serial number of machine.

Furnish: Quantity, Part Number and Description.

WHEN PARTS ARE RECEIVED

Check immediately for quantity, correctness and condition.

Claims for damages, during shipment, should be made to the carrier immediately.

PARTS MANUAL ARRANGEMENT

The various parts groups involved in this equipment are arranged in this manual in alphabetical order. Each alphabetical parts group is page numbered separately with the page numbers prefixed by the alphabetical letter designated for that group, i.e., A1, A2, B1, B2, etc. Following the alphabetical and page number designation, and separated therefrom by a hyphen (-), is the page version number, i.e., A1-1, A1-2, etc. This designation indicates the revision numbers assigned to incorporate design changes in the equipment covered by that page.

Parts Groups "A" thru "Y" include all items furnished as standard equipment at date of this publication. All optional and accessory items are listed under Group "Z" in the rear of this manual. An alphabetical index is given below to permit locating individual parts and items. In addition, each alphabetical parts group contains a separate index on the first page thereof, listing the parts groups contained therein.

INDEX MODEL 275B

A	Page
Accelerator Pedal & Linkage	E16
Accessories & Optional Equipment	Z2—Z31
Accumulator Assembly	H4
Air Cleaner, Element & Connections	E15
Air Chamber, Brake	A3—A13
Air Compressor	E13
Air Lines, Brake	B11—B17
Air Pressure Gauge	E3
Air Pressure Sender	B11—B17
Air Reservoir, Brake	B11—B17
Air Valve, Brake	V2
Alcohol Injector	Z3
Alternator & Belt	E13
Ammeter	E3
Axle Group:	
Axle Assembly — Front	A3—A7
Axle Assembly — Rear	A9, A11
Axle Differential & Carrier Assembly — Front	A15—A19
Axle Differential & Carrier Assembly — Rear	A21, A23
Axle Planet Carrier Assembly	A24

B	Page
Battery	E12
Battery Box	E12
Battery Cables	E5, E7
Bearing Assembly, Midmount	M2
Bellcrank	B3—B7
Belt, Alternator & Fan	E13
Belt, Seat	S2
Boom	B3—B7
Boom Cylinder Assembly	C9—C11
Brake Air Chamber	A3—A13
Brake Air Valve	V2
Brake Assembly, Front & Rear	B18
Brake Assembly, Parking	A19, B19
Brake Check Valve	B11—B17
Brake Group:	
Brake Air Lines	B11—B17
Brake Assembly	B18
Brake Assembly — Parking	A19, B19
Brake Controls	B20
Brake Controls — Parking	B21
Brake Lever Assembly — Parking	B23
Brake Hand Valve	B15

https://truckmanualshub.com/

	Page
Brake Relay Valve	B11—B17
Brake Pads — Parking	A19
Bucket Assembly	B8
Bucket Cylinder Assembly	C12, C13
Bucket Leveler	B3—B7
Bucket Leveler Solenoid	B3—B7
Bucket Leveler Switch	B3—B7
By-Pass Filter Engine Oil	E13
Buzzer Brake Warning	B15

C

Cab Assembly & Cab Lights	Z5—Z7
Canopy Rollbar Attachment	Z8
Check Valve, Brake	B11—B17
Clips — Wiring Pipe & Hose	C2
Clutch Cover	T2
Clutch, First	T6
Clutch, Fourth	T10
Clutch, Input	T10
Clutch, Reverse	T10
Clutch, Second	T6
Clutch, Third	T10
Cockpit	C3
Color Code, Wiring	E9, E11
Compressor, Air	E13
Control Valve, Main — 2 Spool	V4
Control Valve, Main — 3 Spool	Z15
Control Valve, Pilot — 2 Spool	V11
Control Valve, Pilot — 3 Spool	Z21
Control Valve, Transmission	T4
Control Levers & Linkage — Transmission	T5
Controls, Brake	B20
Controls, Brake — Parking	B21
Controls, Engine	E16
Converter Assembly	C5, C5A
Converter Hydraulic System	H15
Converter Oil Filter	H15
Converter Pressure Regulating Valve	C8
Converter Temperature Gauge	E3
Converter Temperature Sender	H15
Cradle	F5
Cylinder Group:	
Cylinder Assembly — Boom	C9—C11
Cylinder Assembly — Bucket	C12, C13
Cylinder Assembly Steering	C14

D

Dash Lamp	E3
Decals	N2
Defroster Fan Assembly	Z9
Differential & Carrier Assembly — Front	A15—A19
Differential Carrier Assembly — Rear	A21, A23
Disc, Parking Brake	A19
Draglink, Steering	S3
Drawbar Pin	F3

E

Electrical Group:	
Electrical Gauges & Instrument Panel	E3
Electrical Wiring & Battery Cables	E5, E7
Electrical Wiring Color Code	E9, E11
Element Air Cleaner	E15
Element Hydraulic Reservoir Filter	E13, H5
Elements, Filter	E13
Engine Group:	
Engine & Accessories	E13, E14
Engine Air Cleaner & Connections	E15
Engine Controls	E16
Engine Exhaust Pipe	E17
Engine & Hydraulic Replacement Elements	E13
Engine Mounts	E14
Engine Oil Filter Assembly	E13
Engine Oil Pressure Gauge	E3
Engine Oil Pressure Sender	E14
Engine Temperature Gauge	E3
Engine Temperature Sender	E14
Exhaust Pipe, Engine	E17

F

Fan Assembly, Defroster	Z9
Fan Belt, Engine	E13
Filter Assembly, Engine	E13
Filter Converter & Transmission Oil	E13, H15
Filter Elements	E13
Filter, Engine Oil By-Pass	E13
Filter Reservoir Oil	E13, H5
Foot Switch, Horn	C3
Frame, Front & Rear	F3, F5
Front Axle Assembly	A3—A7
Fuel Lines	F6
Fuel Tank	F6
Fuses	E3

G

Gauges, Electrical — Instrument Panel	E3
Gauge Hourmeter	E3
Gear Shift Lever, Transmission	T5
Governor, Air Compressor	E13
Grille, Radiator	H3

H

Hand Rails	H6, H5
Hand Valve, Emergency Brake	B21
Head Lamps	F3
Heater Assembly	Z10
Heater Installation	Z11
Hood, Shrouds & Grille	H3
Horn	B11—B17

PM 2814
Printed in U.S.A.

https://truckmanualshub.com/

	Page
Hose Clips	C2
Hourmeter	E3
Hydraulic Accumulator Assembly	H4
Hydraulic Control Valve (2 Spool) — Main	V4
Hydraulic Control Valve (3 Spool) — Main	Z15
Hydraulic Control Valve (2 Spool) — Pilot	V11
Hydraulic Control Valve (3 Spool) — Pilot	Z21
Hydraulic Group:	
Hydraulic Oil Reservoir & Filter	H5
Hydraulic System — Main	H7—H11
Hydraulic System — Steering	H13
Hydraulic System — Transmission & Converter	H15, H17
Hydraulic Pump — Main	P7
Hydraulic Pump — Steering	P9
Hydraulic Piping 3 Spool Valve	Z29
Hydraulic Valve Controls (2 Spool)	V17
Hydraulic Valve Controls (3 Spool)	Z27

I

Ignition Switch	E3
Injector, Alcohol	Z3
Instrument Panel, Gauges & Wiring	E3

L

Lamp, Back-Up	H3
Lamp, Cab Head	Z5
Lamp, Dash	E3
Lamp, Head	F3, Z5
Lamp, Stop & Tail	H3
Lamp, Warning — Brake	B15
Levers & Linkage — Transmission	T5
Levers, Parking Brake	B23
Levers, Valve Control (2 Spool)	V17
Levers, Valve Control (3 Spool)	Z27
Light Switch	E3
Lighter Receptacle & Element	E3
Limit Switch — Bucket Leveler	B3—B7
Linkage, Accelerator	E16
Low Air Pressure Switch	B15

M

Main Control Valve (2 Spool)	V4
Main Control Valve (3 Spool)	Z15
Main Hydraulic Pump	P7
Main Hydraulic System	H7—H11
Michigan Nameplate	N2
Midmount Bearing Assembly	M2
Mounts, Engine	E14
Mounts, Transmission	F3
Muffler & Connections	E17

N

Nameplates & Decals	N2
Neutral Start Switch	T4

O

Oil Cooler, Engine	R2, R3
Oil Filter Elements	E13
Oil Filter, Engine	E13
Oil Filter, Reservoir	E13, H5
Oil Pressure Gauge	E3
Oil Pressure Sender	E14
Oil Reservoir	H5
Optional Accessories & Equipment	Z2—Z31

P

Pan, Transmission	T2
Panel, Instrument	E3
Panels, Side	Z13
Parking Brake Assembly	A19, B19
Parking Brake Controls	B21
Parking Brake Lever Assembly	B23
Pedal, Accelerator	E16
Pedal, Brake	B20
Pilot Valve — 2 Spool	V11
Pilot Valve — 3 Spool	Z21
Pipe, Clips	C2
Planet Carrier Assembly — Axle	A24
Pressure Regulating Valve — Converter	C8
Propeller Shaft	P2—P4
Propeller Shaft Midmount Bearing	M2
Pump, Main	P7
Pump, Steering	P9
Pushrods — Bellcrank to Bucket	B3—B7

Q

Quadrant Shift Indicator	T5
Quick Release Valve	B11—B17

R

Radiator Assembly	R2, R3
Radiator Cap	R2, R3
Radiator Connections	R4, R5
Rail Hand	F6, H5
Rear Drive Axle	A9, A11
Rear Drive Differential & Carrier	A21, A23
Rear Frame	F5
Reservoir, Air	B11—B17
Reservoir, Hydraulic Oil	H5
Reverse Shaft Group	T12
Reverse, Third & Fourth Clutch Group	T10
Resistor — 24V	E3
Rods, Accelerator	E16
Rods, Shift	T5
Rods, Valve Control	V17, Z27
Rollbar, Attachment, Canopy	Z8

S

Seat, Belt & Support Parts	S2

https://truckmanualshub.com/

	Page
Second & Third Shaft Group	T7
Second & First Clutches	T6
Sender Unit, Air Pressure	B11—B17
Sender Unit, Converter Temperature	H15
Sender Unit, Engine Oil Pressure	E14
Sender Unit, Engine Temperature	E14
Shaft, Idler	T8
Shaft, Input	T9
Shaft, Mid-Mount Bearing	M2
Shaft, Output	T11
Shaft, Propeller	P2—P4
Shaft, Reverse	T12
Shift, Indicator Quadrant	T5
Shift Levers, Transmission	T5
Shroud, Radiator Fan	R2, R3
Side Panels, Engine	Z13
Slack Adjuster	A3—A11
Starter Push Button	E3
Steering Cylinder Assembly	C14
Steering Group:	
Steering Draglink	S3
Steering Gear Assembly	S5
Steering Gear Mounting	S6
Steering Hydraulic Pump	P9
Steering Hydraulic System	H13
Steering Wheel	S5
Steps	F6, H5
Stop Light Switch	B11—B17
Stop & Tail Lamp Assembly	H3
Support, Engine	E14
Support, Transmission	F3
Switch, Horn Foot	C3
Switch, Ignition	E3
Switch, Light	E3
Switch, Limit — Bucket Leveler	B3—B7
Switch, Low Air	B15
Switch, Neutral Start	T4
Switch, Stop Light	B11—B17

T

Tail Lamp	H3
Tail Lamp Wiring Harness	E5, E7
Tailpipe, Engine	E17
Tail & Stop Lamp Assembly	H3
Tank, Air	B11—B17
Tank, Fuel	F6
Tank, Oil Reservoir	H5
Temperature Gauges, Engine & Converter	E3
Temperature Sender Unit, Engine	E14
Three Spool Control Valve Main & Pilot	Z15—Z25

	Page
Tire & Wheel Data	W2
Torque Converter Assembly	C5, C5A
Transmission Group:	
Trans. Assembly & Clutch Cover Group	T2
Trans. Case & Internal Tubing	T3
Temperature Sender Unit, Converter	H15
Trans. Control Cover Assembly	T4
Trans. Control Rods & Linkage	T5
Trans. Idler Shaft Group	T5
Trans. Input, Reverse, Third & Fourth Clutch Group	T10
Trans. Input Shaft Group	T9
Trans. First & Second Clutch Group	T6
Trans. First & Third Shaft Group	T7
Trans. Output Shaft Group	T11
Trans. Reverse Shaft Group	T12
Trans. Second & Fourth Shaft Group	T13
Transmission Hydraulic System	H15, H17
Transmission Oil Filter	E13, H15
Transmission Mounts	F3

V

Valve Assembly, Main — 2 Spool	V4
Valve Assembly, Main — 3 Spool	Z15
Valve Assembly, Pilot — 2 Spool	V11
Valve Assembly, Pilot — 3 Spool	Z21
Valve Assembly, Transmission	T4
Valve Check — Brake	B11—B17
Valve, Air Brake	V2
Valve Controls — 2 Spool	V17
Valve Controls — 3 Spool	Z27
Valve, Downstream Pressure Regulating	C8
Valve, Hand — Emergency Brake	B15
Valve Piping, 3 Spool	Z29
Valve Relay — Emergency Brake	B15

W

Warning Buzzer & Lamp — Brake	B15
Wheel Studs	A3—A11
Wheel & Tire Data	W2
Windows, Cab	Z5, Z7
Windshield Wiper Assemblies	Z31
Wire Cab Light	Z5
Wire, Defroster Fan	Z9
Wire, Heater	Z11
Wire, Emergency Brake	B15
Wiring Clips	C2
Wiring Diagrams	E9, E11
Wiring, Instrument Panel	E3

PM 2814
Printed in U.S.A.

https://truckmanualshub.com/

"A" GROUP

CONTENTS

Axle Group:

Axle Assembly — Front ..... A 3

Axle Assembly — Rear ..... A 9

Axle Brake Air Chamber — Rear ..... A 13

Axle Differential & Carrier Assembly — Front ..... A 15

Axle Differential & Carrier Assembly — Rear ..... A 21

Axle Planet Carrier Assembly — Front & Rear ..... A 24

https://truckmanualshub.com/

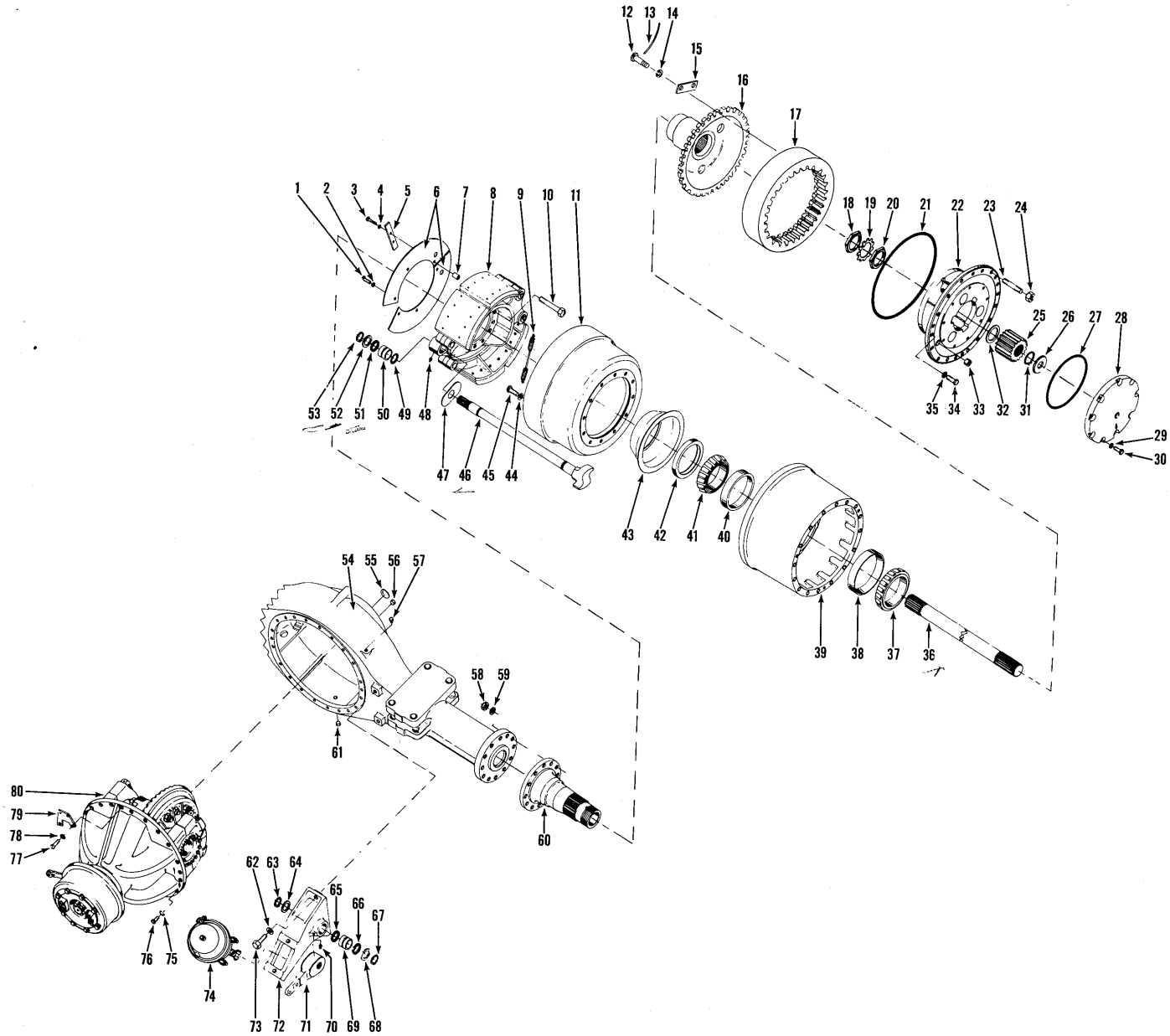

AXLE ASSEMBLY — FRONT
For Serial: 425A101 thru 263

TS-9183

https://truckmanualshub.com/

AXLE ASSEMBLY — FRONT

For Serial: 425A101 thru 263

Item No.	Part No.	Description	No. Req'd.
A	191131	AXLE ASSY (Inc. 1 thru 80) (FD-70500)	1
1	1C-632	BOLT, Dust Cover	4
2	4E-06	LKWSHR, Dust Cover	4
3	1C-636	BOLT, Dust Cover	4
4	4E-06	LKWSHR, Dust Cover	4
5	112695	PLATE, Dust Cover Reinforcing	2
6	118306	COVER, Brake Dust	4
7	655673	SPACER, Brake Dust Cover	8
8	———	BRAKE ASSY — See Index	—
9	119650	SPRING, Brake Return	2
10	107731	BOLT, Brake Attaching	24
11	121203	DRUM, Brake	2
12	4C-820	BOLT, Hub to Gear	24
13	———	‡LOCKWIRE — 18 ga.	—
14	4E-08	LKWSHR, Hub to Gear	24
15	122701	PLATE, Hub to Gear Retaining	12
16	122508	HUB, Internal Gear	2
17	119742	GEAR, Internal Ring	2
18	114434	NUT, Inner Spindle	2
19	108028	LOCK, Spindle Nut	2
20	114434	NUT, Outer Spindle	2
21	108031	O-RING, Planet Carrier	2
22	———	AXLE PLANET CARRIER ASSY — See Index	—
23	118831	STUD, Wheel Mounting	32
24	64D-14	NUT, Wheel Mounting	32
25	122512	GEAR, Sun	2
26	108475	WASHER, Sun Gear Thrust	2
27	116923	O-RING, Cap to Carrier	2
28	116937	CAP, Sun Gear Thrust (Inc. 26)	2
29	106762	WASHER, Thrust Cap Mounting	18
30	1C-824	BOLT, Thrust Cap Mounting	18
31	224073	RING, Sun Gear Thrust	2
32	108478	WASHER, Sun Gear Thrust	2
33	119470	PLUG, Planet Filler	2
34	1C-1030	BOLT, Planet Carrier	6
35	4E-10	LKWSHR, Planet Carrier	6
36	122513	SHAFT, Axle	2
37	1317348	CONE, Outer Hub Bearing	2
38	713323	CUP, Outer Hub Bearing	2
39	120391	HUB ASSY (Inc. 38, 40)	2
40	1311615	CUP, Inner Hub Bearing	2
41	1311939	CONE, Inner Hub Bearing	2
42	120395	SEAL, Hub Oil	2
43	120534	CATCHER, Oil	2
44	111656	WASHER, Brake Drum	24
45	122516	BOLT, Brake Drum	24
46	122514	CAMSHAFT — R.H.	1
46A	122515	†CAMSHAFT — L.H.	1
47	107735	WASHER, Camshaft Thrust	2
48	12H-15	FITTING, Brake Spider Grease	2
49	25K-60124	O-RING, Camshaft	2
50	107739	BUSHING, Brake Spider	2
51	11E-135	RETAINER, Camshaft Grease	2
52	107736	WASHER, Camshaft Retaining	2
53	660516	RING, Camshaft Retaining	2
54	122510	HOUSING, Axle	1
55	———	OMIT — Not Used This Application	—
56	226858	PLUG, Housing Filler	1
57	121214	BREATHER, Axle Housing	1
58	107732	NUT, Brake Attaching	24
59	111658	WASHER, Brake Attaching	24
60	122511	SPINDLE	2
61	731221	PLUG, Housing Drain	1
62	4E-12	LKWSHR, Air Chamber Bracket Mounting	4
63	659764	RING, Slack Adjuster Retaining	2
64	107010	WASHER, Slack Adjuster Retaining	2
65	11E-135	RETAINER, Camshaft Grease	2
66	11E-135	RETAINER, Camshaft Grease	2
67	660516	RING, Camshaft Retaining	2
68	107736	WASHER, Camshaft Retaining	2
69	107739	BUSHING, Air Chamber Bracket	2
70	10H-25	FITTING, Air Chamber Bracket Grease	2
71	108476	*ADJUSTER, Brake Slack (B.W. #226655)	2
72	122947	BRACKET, Air Chamber — R.H.	1
72A	122948	†BRACKET, Air Chamber — L.H.	1
73	1C-1236	BOLT, Air Chamber Bracket Mounting	4
74	110206	*AIR CHAMBER ASSY (B.W. #229403) (Inc. 74A thru 74G)	2
74A	944735	†DIAPHRAGM, Air Chamber	2
74B	945725	†BOOT, Air Chamber	2
74C	1551657	†RETAINER, Boot	2
74D	1551385	†SPRING	2
74E	949135	†PUSH ROD	2
74F	3292162	†YOKE	2
74G	8D-10	†NUT, Yoke Lock	2
75	104412	WASHER, Carrier to Housing	24
76	117336	STUD, Carrier to Housing	6
76A	120771	†STUD, Carrier to Housing	22
77	1C-1012	BOLT, Carrier Puller	4
78	4E-10	LKWSHR, Carrier Puller	4
79	536879	BRACKET, Release Valve	1
80	———	AXLE DIFFERENTIAL & CARRIER ASSY (See Index)	—

‡As Required
†Not Illustrated
*NOTE: Your local authorized Bendix-Westinghouse Distributor is equipped to service components of this part.

WHEN ORDERING PARTS, ALWAYS STATE MODEL AND SERIAL NO. OF MACHINE

https://truckmanualshub.com/

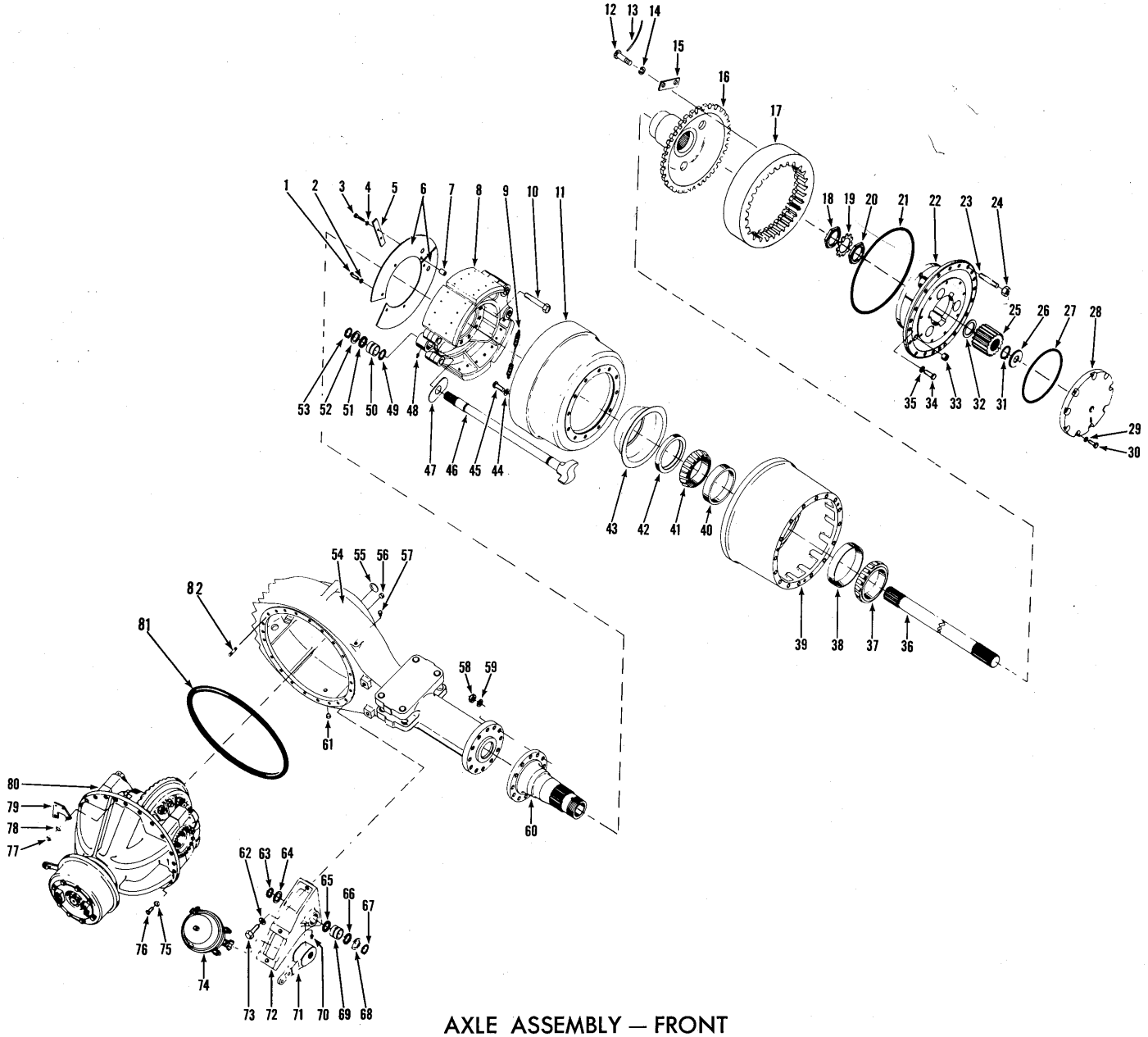

AXLE ASSEMBLY — FRONT
For Serial: 425A264 thru 999

TS-11141

https://truckmanualshub.com/

AXLE ASSEMBLY — FRONT

For Serial: 425A264 thru 999

Item No.	Part No.	Description	No. Req'd.
A	191290	AXLE ASSY (Inc. 1 thru 82A) (D-75501)	1
1	1C-632	BOLT, Dust Cover	4
2	4E-06	LKWSHR, Dust Cover	4
3	1C-636	BOLT, Dust Cover	4
4	4E-06	LKWSHR, Dust Cover	4
5	112695	PLATE, Dust Cover Reinforcing	2
6	118306	COVER, Brake Dust	4
7	655673	SPACER, Brake Dust Cover	8
8	———	BRAKE ASSY — See Index	—
9	119650	SPRING, Brake Return	2
10	107731	BOLT, Brake Attaching	24
11	121203	DRUM, Brake	2
12	4C-820	BOLT, Hub to Gear	24
13	———	‡LOCKWIRE — 18 ga.	—
14	4E-08	LKWSHR, Hub to Gear	24
15	122701	PLATE, Hub to Gear Retaining	12
16	122508	HUB, Internal Gear	2
17	119742	GEAR, Internal Ring	2
18	114434	NUT, Inner Spindle	2
19	108028	LOCK, Spindle Nut	2
20	114434	NUT, Outer Spindle	2
21	108031	O-RING, Planet Carrier	2
22	———	AXLE PLANET CARRIER ASSY — See Index	—
23	118831	STUD, Wheel Mounting	32
24	64D-14	NUT, Wheel Mounting	32
25	122512	GEAR, Sun	2
26	108475	WASHER, Sun Gear Thrust	2
27	116923	O-RING, Cap to Carrier	2
28	116937	CAP, Sun Gear Thrust (Inc. 26)	2
29	106762	WASHER, Thrust Cap Mounting	2
30	1C-824	BOLT, Thrust Cap Mounting	18
31	224073	RING, Sun Gear Retaining	2
32	108478	WASHER, Sun Gear Thrust	2
33	119470	PLUG, Planet Filler	2
34	1C-1030	BOLT, Planet Carrier	6
35	4E-10	LKWSHR, Planet Carrier	6
36	122513	SHAFT, Axle	2
37	1317348	CONE, Outer Hub Bearing	2
38	713323	CUP, Outer Hub Bearing	2
39	120391	HUB ASSY (Inc. 38, 40)	2
40	1311615	CUP, Inner Hub Bearing	2
41	1311939	CONE, Inner Hub Bearing	2
42	120395	SEAL, Hub Oil	2
43	120534	CATCHER, Oil	2
44	111656	WASHER, Brake Drum	24
45	122516	BOLT, Brake Drum	24
46	122514	CAMSHAFT — R.H.	1
46A	122515	†CAMSHAFT — L.H.	1
47	107735	WASHER, Camshaft Thrust	2
48	12H-15	FITTING, Brake Spider Grease	2
49	25K-60124	O-RING, Camshaft	2
50	107739	BUSHING, Brake Spider	2
51	11E-135	RETAINER, Camshaft Grease	2
52	107736	WASHER, Camshaft Retaining	2
53	660516	RING, Camshaft Retaining	2
54	122510	HOUSING, Axle	2
55	———	OMIT — Not Used This Application	—
56	226858	PLUG, Housing Filler	1
57	121214	BREATHER, Axle Housing	1
58	107732	NUT, Brake Attaching	24
59	111658	WASHER, Brake Attaching	24
60	122511	SPINDLE	2
61	731221	PLUG, Housing Drain	1
62	4E-12	LKWSHR, Air Chamber Bracket Mounting	4
63	659764	RING, Slack Adjusting Retaining	2
64	107010	WASHER, Slack Adjuster Retaining	2
65	11E-135	RETAINER, Camshaft Grease	2
66	11E-135	RETAINER, Camshaft Grease	2
67	660516	RING, Camshaft Retaining	2
68	107736	WASHER, Camshaft Retaining	2
69	107739	BUSHING, Air Chamber Bracket	2
70	10H-25	FITTING, Air Chamber Bracket Grease	2
71	108476	*ADJUSTER, Brake Slack (B.W. #226655)	2
72	122947	BRACKET, Air Chamber — R.H.	1
72A	122948	†BRACKET, Air Chamber — L.H.	1
73	1C-1236	BOLT, Air Chamber Bracket Mounting	4
74	110206	*AIR CHAMBER ASSY (B.W. #229403) (Inc. 74A thru 74G)	2
74A	944735	†DIAPHRAGM, Air Chamber	2
74B	945725	†BOOT, Air Chamber	2
74C	1551657	RETAINER, Boot	2
74D	1551385	†SPRING	2
74E	949135	†PUSH ROD	2
74F	3292162	YOKE ASSY	2
74G	8D-10	†NUT, Yoke Lock	2
75	4E-10	LKWSHR, Carrier Pull	4
76	1C-1012	BOLT, Carrier Puller	4
77	18D-10	NUT, Carrier to Housing	22
78	104412	WASHER, Carrier to Housing	26
79	536879	BRACKET, Release Valve	1
80	———	AXLE DIFFERENTIAL & CARRIER ASSY — See Index	—
81	122067	O-RING, Carrier to Housing	1
82	123792	STUD, Carrier to Housing	16
82A	123793	†STUD, Carrier to Housing	6

†Not Illustrated
‡As Required
*NOTE: Your local authorized Bendix-Westinghouse Distributor is equipped to service components of this part.

WHEN ORDERING PARTS, ALWAYS STATE MODEL AND SERIAL NO. OF MACHINE

https://truckmanualshub.com/

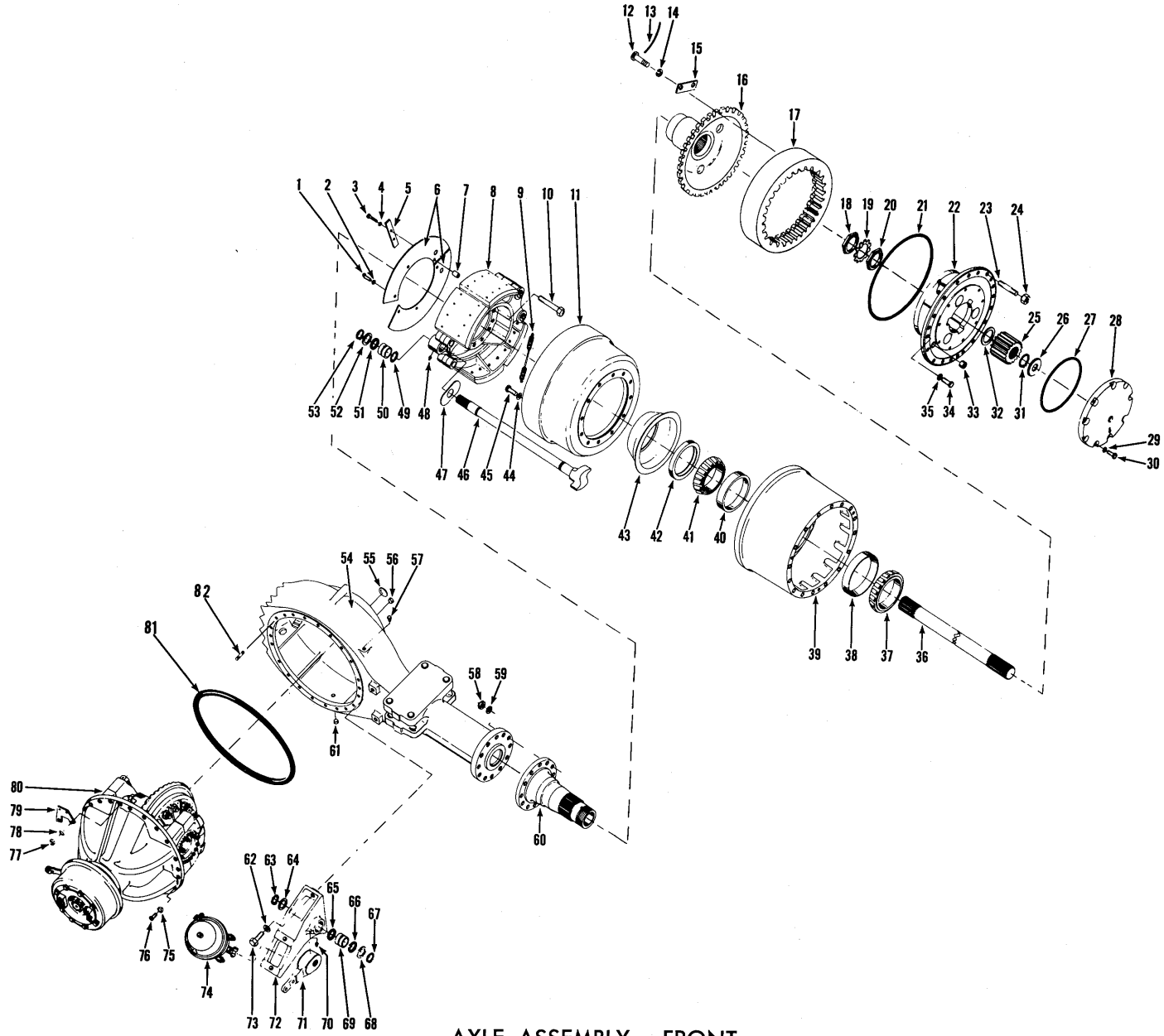

AXLE ASSEMBLY — FRONT
For Serial: 425B101 & After

TS-11141

https://truckmanualshub.com/

AXLE ASSEMBLY — FRONT

For Serial: 425B101 & After

Item No.	Part No.	Description	No. Req'd.
A	191582	AXLE ASSY (Inc. 1 thru 82A) (D-75501)	1
1	1C-632	BOLT, Dust Cover	4
2	4E-06	LKWSHR, Dust Cover	4
3	1C-636	BOLT, Dust Cover	4
4	4E-06	LKWSHR, Dust Cover	4
5	112695	PLATE, Dust Cover Reinforcing	2
6	118306	COVER, Brake Dust	4
7	655673	SPACER, Brake Dust Cover	8
8	———	BRAKE ASSY — See Index	—
9	119650	SPRING, Brake Return	2
10	107731	BOLT, Brake Attaching	24
11	121203	DRUM, Brake	2
12	4C-820	BOLT, Hub to Gear	24
13	———	‡LOCKWIRE — 18 ga.	—
14	4E-08	LKWSHR, Hub to Gear	24
15	122701	PLATE, Hub to Gear Retaining	12
16	122508	HUB, Internal Gear	2
17	119742	GEAR, Internal Ring	2
18	114434	NUT, Inner Spindle	2
19	108028	LOCK, Spindle Nut	2
20	114434	NUT, Outer Spindle	2
21	108031	O-RING, Planet Cover	2
22	———	AXLE PLANET CARRIER ASSY — See Index	—
23	118831	STUD, Wheel Mounting	32
24	64D-14	NUT, Wheel Mounting	32
25	122512	GEAR, Sun	2
26	108475	WASHER, Sun Gear Thrust	2
27	116923	O-RING, Cap to Carrier	2
28	116937	CAP, Sun Gear Thrust (Inc. 26)	2
29	106762	WASHER, Thrust Cap Mounting	18
30	1C-824	BOLT, Thrust Cap Mounting	18
31	224073	RING, Sun Gear Retaining	2
32	108478	WASHER, Sun Gear Thrust	2
33	119470	PLUG, Planet Filler	2
34	1C-1030	BOLT, Planet Carrier	6
35	4E-10	LKWSHR, Planet Carrier	6
36	122513	SHAFT, Axle	2
37	1317348	CONE, Outer Hub Bearing	2
38	713323	CUP, Outer Hub Bearing	2
39	120391	HUB ASSY (Inc. 38, 40)	2
40	1311615	CUP, Inner Hub Bearing	2
41	1311939	CONE, Inner Hub Bearing	2
42	120395	SEAL, Hub Oil	2
43	120534	CATCHER, Oil	2
44	111656	WASHER, Brake Drum	24
45	122516	BOLT, Brake Drum	24
46	122514	CAMSHAFT — R.H.	1
46A	122515	†CAMSHAFT — L.H.	1
47	107735	WASHER, Camshaft Thrust	2
48	12H-15	FITTING, Brake Spider Grease	2
49	25K-60124	O-RING, Camshaft	2
50	107739	BUSHING, Brake Spider	2
51	11E-135	RETAINER, Camshaft Grease	2
52	107736	WASHER, Camshaft Retaining	2
53	660516	RING, Camshaft Retaining	2
54	122510	HOUSING, Axle	1
55	———	OMIT — Not Used This Application	—
56	226858	PLUG, Housing Filler	1
57	121214	BREATHER, Axle Housing	1
58	107732	NUT, Brake Attaching	24
59	111658	WASHER, Brake Attaching	24
60	122511	SPINDLE	2
61	731221	PLUG, Housing Drain	1
62	4E-12	LKWSHR, Air Chamber Bracket Mounting	4
63	659764	RING, Slack Adjuster Retaining	2
64	107010	WASHER, Slack Adjuster Retaining	2
65	11E-135	RETAINER, Camshaft Grease	2
66	11E-135	RETAINER, Camshaft Grease	2
67	660516	RING, Camshaft Retaining	2
68	107736	WASHER, Camshaft Retaining	2
69	107739	BUSHING, Air Chamber Bracket	2
70	10H-25	FITTING, Air Chamber Bracket Grease	2
71	108476	*ADJUSTER, Brake Slack (B.W. #226655)	2
72	122947	BRACKET, Air Chamber — R.H.	1
72A	122948	†BRACKET, Air Chamber — L.H.	1
73	1C-1236	BOLT, Air Chamber Bracket Mounting	4
74	110206	*AIR CHAMBER ASSY (B.W. #229403) (Inc. 74A thru 74G)	2
74A	944735	†DIAPHRAGM, Air Chamber	2
74B	945725	†BOOT, Air Chamber	2
74C	1551657	†RETAINER, Boot	2
74D	1551385	†SPRING	2
74E	949135	†PUSH ROD	2
74F	3292162	†YOKE ASSY	2
74G	8D-10	†NUT, Yoke Lock	2
75	4E-10	LKWSHR, Carrier to Housing	4
76	1C-1012	BOLT, Carrier to Housing	4
77	18D-10	NUT, Carrier to Housing	22
78	104412	WASHER, Carrier to Housing	26
79	536879	BRACKET, Release Valve	1
80	———	AXLE DIFFERENTIAL & CARRIER ASSY — See Index	—
81	122067	O-RING, Carrier to Housing	1
82	123792	STUD, Carrier to Housing	16
82A	123793	†STUD, Carrier to Housing	6

†Not Illustrated
‡As Required
*NOTE: Your local authorized Bendix-Westinghouse Distributor is equipped to service components of this part.

WHEN ORDERING PARTS, ALWAYS STATE MODEL AND SERIAL NO. OF MACHINE

https://truckmanualshub.com/

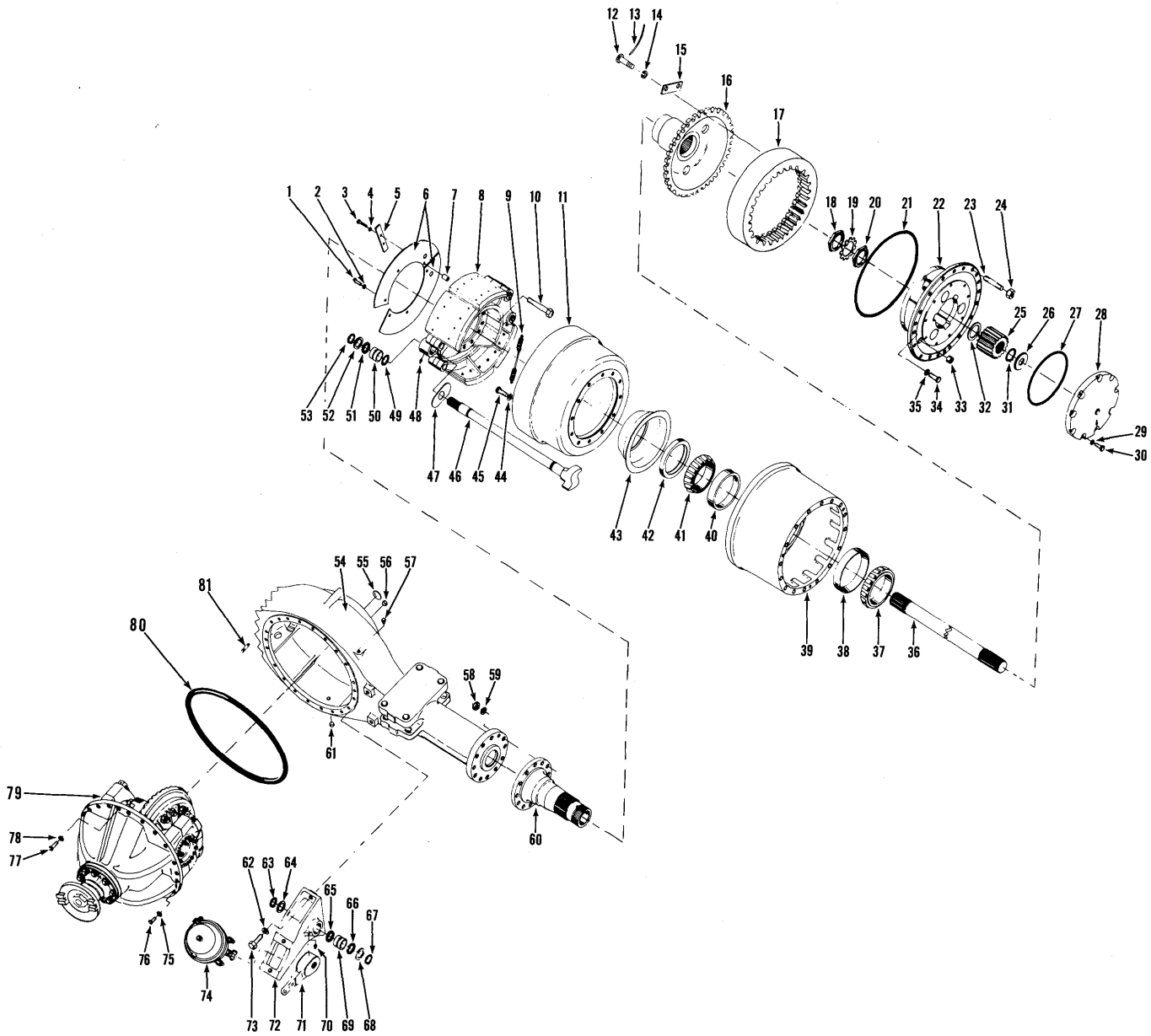

AXLE ASSEMBLY — REAR
For Serial: 425A101 thru 263

TS-11145

https://truckmanualshub.com/

AXLE ASSEMBLY — REAR

For Serial: 425A101 thru 263

Item No.	Part No.	Description	No. Req'd.
A	191132	AXLE ASSY (Inc. 8 thru 81A) (RD-70501)	1
1	1C-632	BOLT, Dust Cover	4
2	4E-06	LKWSHR, Dust Cover	4
3	1C-636	BOLT, Dust Cover	4
4	4E-06	LKWSHR, Dust Cover	4
5	112695	PLATE, Dust Cover Reinforcing	2
6	118306	COVER, Brake Dust	4
7	655673	SPACER, Dust Cover	8
8	———	BRAKE ASSY — See Index	—
9	119650	SPRING, Brake Return	2
10	107731	BOLT, Brake Attaching	24
11	121203	DRUM, Brake	2
12	4C-820	BOLT, Hub to Gear	24
13	———	‡LOCKWIRE — 18 ga.	—
14	4E-08	LKWSHR, Hub to Gear	24
15	122701	PLATE, Hub to Gear Retaining	12
16	122508	HUB, Internal Gear	2
17	119742	GEAR, Internal Ring	2
18	114434	NUT, Inner Spindle	2
19	108028	LOCK, Spindle Nut	2
20	114434	NUT, Outer Spindle	2
21	108031	O-RING, Planet Carrier	2
22	———	AXLE PLANET CARRIER ASSY — See Index	—
23	118831	STUD, Wheel Mounting	32
24	64D-14	NUT, Wheel Mounting	32
25	122512	GEAR, Sun	2
26	108475	WASHER, Sun Gear Thrust	2
27	116923	O-RING, Cap to Carrier	2
28	116937	CAP, Sun Gear Thrust (Inc. 26)	2
29	106762	WASHER, Thrust Cap Mounting	18
30	1C-824	BOLT, Thrust Cap Mounting	18
31	224073	RING, Sun Gear Retaining	2
32	108478	WASHER, Sun Gear Thrust	2
33	119470	PLUG, Planet Filler	2
34	1C-1030	BOLT, Planet Carrier	6
35	4E-10	LKWSHR, Planet Carrier	6
36	122513	SHAFT, Axle	2
37	1317348	CONE, Outer Hub Bearing	2
38	713323	CUP, Outer Hub Bearing	2
39	120391	HUB ASSY (Inc. 38, 40)	2
40	1311615	CUP, Inner Hub Bearing	2
41	1311939	CONE, Inner Hub Bearing	2
42	120395	SEAL, Hub Oil	2
43	120534	CATCHER, Oil	2
44	111656	WASHER, Brake Drum	24
45	122516	BOLT, Brake Drum	24
46	122514	CAMSHAFT — L.H.	1
46A	122515	†CAMSHAFT — R.H.	1
47	107735	WASHER, Camshaft Thrust	2
48	12H-15	FITTING, Brake Spider Grease	2
49	25K-60124	O-RING, Camshaft	2
50	107739	BUSHING, Brake Spider	2
51	11E-135	RETAINER, Camshaft Grease	2
52	107736	WASHER, Camshaft Retaining	2
53	660516	RING, Camshaft Retaining	2
54	122510	HOUSING, Axle	1
55	———	OMIT, Not Used This Application	—
56	226858	PLUG, Housing Filler	1
57	121214	BREATHER, Axle Housing	1
58	107732	NUT, Brake Attaching	24
59	111658	WASHER, Brake Attaching	24
60	122511	SPINDLE	2
61	731221	PLUG, Housing Drain	1
62	4E-12	LKWSHR, Air Chamber Bracket Mounting	4
63	659764	RING, Slack Adjuster Retaining	2
64	107010	WASHER, Slack Adjuster Retaining	2
65	11E-135	RETAINER, Camshaft Grease	2
66	11E-135	RETAINER, Camshaft Grease	2
67	660516	RING, Camshaft Retaining	2
68	107736	WASHER, Camshaft Retaining	2
69	107739	BUSHING, Air Chamber Bracket	2
70	10H-25	FITTING, Air Chamber Bracket Grease	2
71	108476	*ADJUSTER, Brake Slack (B.W. #226655)	2
72	122948	BRACKET, Air Chamber — L.H.	1
72A	122947	†BRACKET, Air Chamber — R.H.	1
73	1C-1236	BOLT, Air Chamber Bracket Mounting	4
74	110206	*AIR CHAMBER ASSY (B.W. #229403) (Inc. 74A thru 74G)	2
74A	944735	†DIAPHRAGM, Air Chamber	2
74B	945725	†BOOT, Air Chamber	2
74C	1551657	†RETAINER, Boot	2
74D	1551385	†SPRING	2
74E	949135	†ROD, Push	2
74F	3292162	†YOKE ASSY	2
74G	8D-10	†NUT, Yoke Lock	2
75	4E-10	LKWSHR, Carrier to Housing	4
76	1C-1012	BOLT, Carrier to Housing	4
77	18D-10	NUT, Carrier to Housing	22
78	104412	WASHER, Carrier to Housing	22
79	———	AXLE DIFFERENTIAL & CARRIER ASSY — See Index	—
80	122067	O-RING, Carrier to Housing	1
81	120771	STUD, Carrier to Housing	18
81A	117336	†STUD, Carrier to Housing	4

†Not Illustrated
‡As Required
*NOTE: Your local authorized Bendix-Westinghouse Distributor is equipped to service components of this part.

WHEN ORDERING PARTS, ALWAYS STATE MODEL AND SERIAL NO. OF MACHINE

https://truckmanualshub.com/

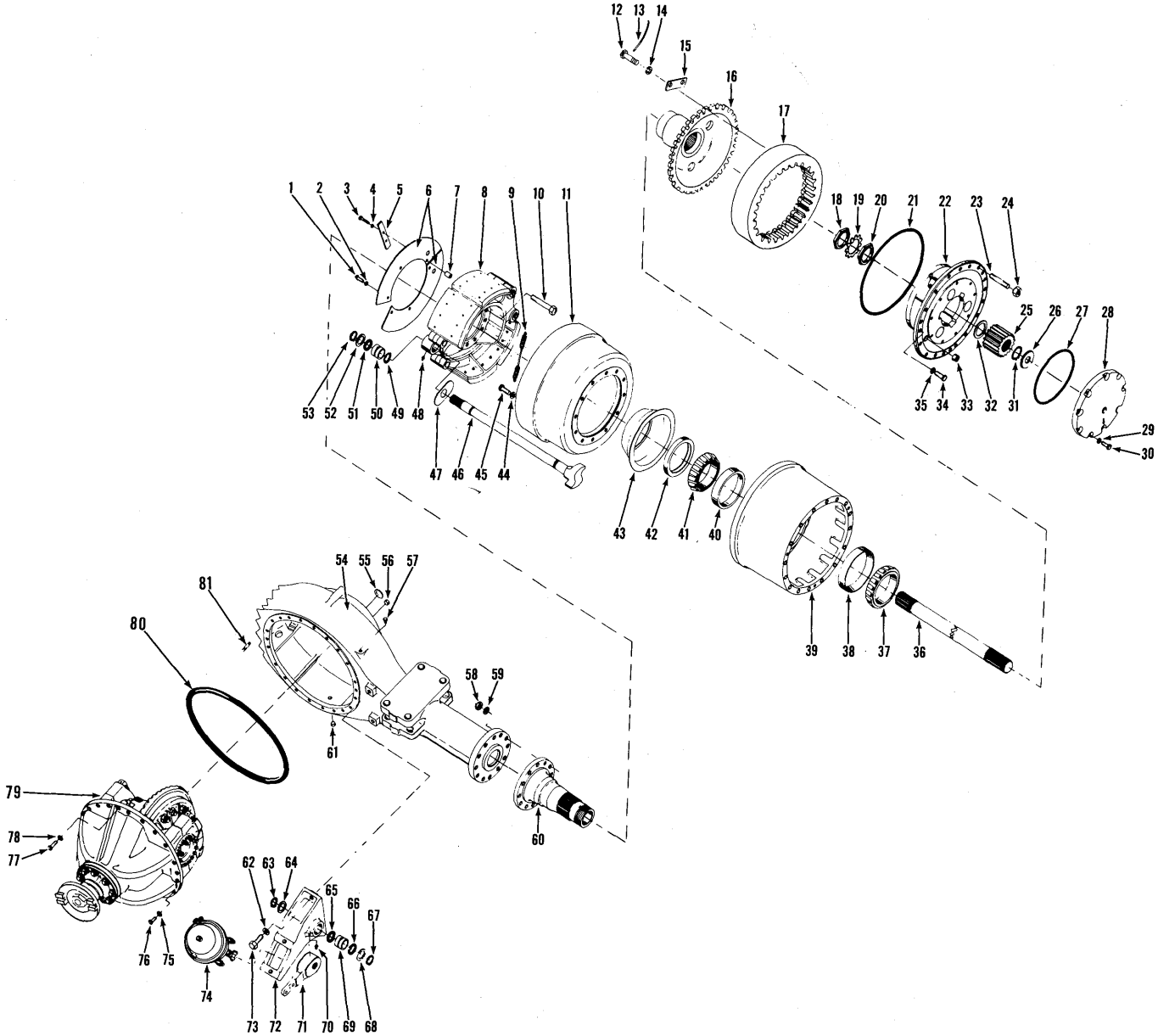

AXLE ASSEMBLY — REAR
For Serial: 425A264 & After

TS-11145

https://truckmanualshub.com/

AXLE ASSEMBLY — REAR

For Serial: 425A264 & After

Item No.	Part No.	Description	No. Req'd.
A	191291	AXLE ASSY (Inc. 8 thru 81)	1
1	1C-632	BOLT, Dust Cover	4
2	4E-06	LKWSHR, Dust Cover	4
3	1C-636	BOLT, Dust Cover	4
4	4E-06	LKWSHR, Dust Cover	4
5	112695	PLATE, Dust Cover Reinforcing	2
6	118306	COVER, Brake Dust	4
7	655673	SPACER, Dust Cover	8
8	———	AXLE BRAKE ASSY — See Index	—
9	119650	SPRING, Brake Return	2
10	107731	BOLT, Brake Attaching	24
11	121203	DRUM, Brake	2
12	4C-820	BOLT, Hub to Gear	24
13	———	‡LOCKWIRE — 18 ga.	—
14	4E-08	LKWSHR, Hub to Gear	24
15	122701	PLATE, Hub to Gear Retaining	12
16	122508	HUB, Internal Gear	2
17	119742	GEAR, Internal Ring	2
18	114434	NUT, Inner Spindle	2
19	108028	LOCK, Spindle Nut	2
20	114434	NUT, Outer Spindle	2
21	108031	O-RING, Planet Carrier	2
22	———	AXLE PLANET CARRIER ASSY — See Index	—
23	118831	STUD, Wheel Mounting	32
24	64D-14	NUT, Wheel Mounting	32
25	122512	GEAR, Sun	2
26	108475	WASHER, Sun Gear Thrust	2
27	116923	O-RING, Cap to Carrier	2
28	116937	CAP, Sun Gear Thrust (Inc. 26)	2
29	106762	WASHER, Thrust Cap Mounting	18
30	1C-824	BOLT, Thrust Cap Mounting	18
31	224073	RING, Sun Gear Retaining	2
32	108478	WASHER, Sun Gear Thrust	2
33	119470	PLUG, Planet Filler	2
34	1C-1030	BOLT, Planet Carrier	6
35	4E-10	LKWSHR, Planet Carrier	6
36	122513	SHAFT, Axle	2
37	1317348	CONE, Outer Hub Bearing	2
38	713323	CUP, Outer Hub Bearing	2
39	120391	HUB ASSY (Inc. 38, 40)	2
40	1311615	CUP, Inner Hub Bearing	2
41	1311939	CONE, Inner Hub Bearing	2
42	120395	SEAL, Hub Oil	2
43	120534	CATCHER, Oil	2
44	111656	WASHER, Brake Drum	24
45	122516	BOLT, Brake Drum	24
46	122514	CAMSHAFT — L.H.	1
46A	122515	†CAMSHAFT — R.H.	1
47	107735	WASHER, Camshaft Thrust	2
48	12H-15	FITTING, Brake Spider Grease	2
49	25K-60124	O-RING, Camshaft	2
50	107739	BUSHING, Brake Spider	2
51	11E-135	RETAINER, Camshaft Grease	2
52	107736	WASHER, Camshaft Retaining	2
53	660516	RING, Camshaft Retaining	2
54	122510	HOUSING, Axle	1
55	———	OMIT — Not Used This Application	—
56	226858	PLUG, Housing Filler	1
57	121214	BREATHER, Axle Housing	1
58	107732	NUT, Brake Attaching	24
59	111658	WASHER, Brake Attaching	24
60	122511	SPINDLE	2
61	731221	PLUG, Housing Drain	1
62	4E-12	LKWSHR, Air Chamber Bracket Mounting	4
63	659764	RING, Slack Adjuster Retaining	2
64	107010	WASHER, Slack Adjuster Retaining	2
65	11E-135	RETAINER, Camshaft Grease	2
66	11E-135	RETAINER, Camshaft Grease	2
67	660516	RING, Camshaft Retaining	2
68	107736	WASHER, Camshaft Retaining	2
69	107739	BUSHING, Air Chamber Bracket	2
70	10H-25	FITTING, Air Chamber Bracket Grease	2
71	108476	*ADJUSTER, Brake Slack (B.W. #226655)	2
72	122948	BRACKET, Air Chamber — L.H.	1
72A	122947	†BRACKET, Air Chamber — R.H.	1
73	1C-1236	BOLT, Air Chamber Bracket Mounting	4
74	———	AIR CHAMBER ASSY — See Index	—
75	4E-10	LKWSHR, Carrier Puller	4
76	1C-1012	BOLT, Carrier Puller	4
77	18D-10	NUT, Carrier to Housing	22
78	104412	WASHER, Carrier to Housing	22
79	———	AXLE DIFFERENTIAL & CARRIER ASSY — See Index	—
80	122067	O-RING, Carrier to Housing	1
81	123792	STUD, Carrier to Housing	18
81A	123793	STUD, Carrier to Housing	4

†Not Illustrated
‡As Required
*NOTE: Your local authorized Bendix-Westinghouse Distributor is equipped to service components of this part.

WHEN ORDERING PARTS, ALWAYS STATE MODEL AND SERIAL NO. OF MACHINE

https://truckmanualshub.com/

https://truckmanualshub.com/

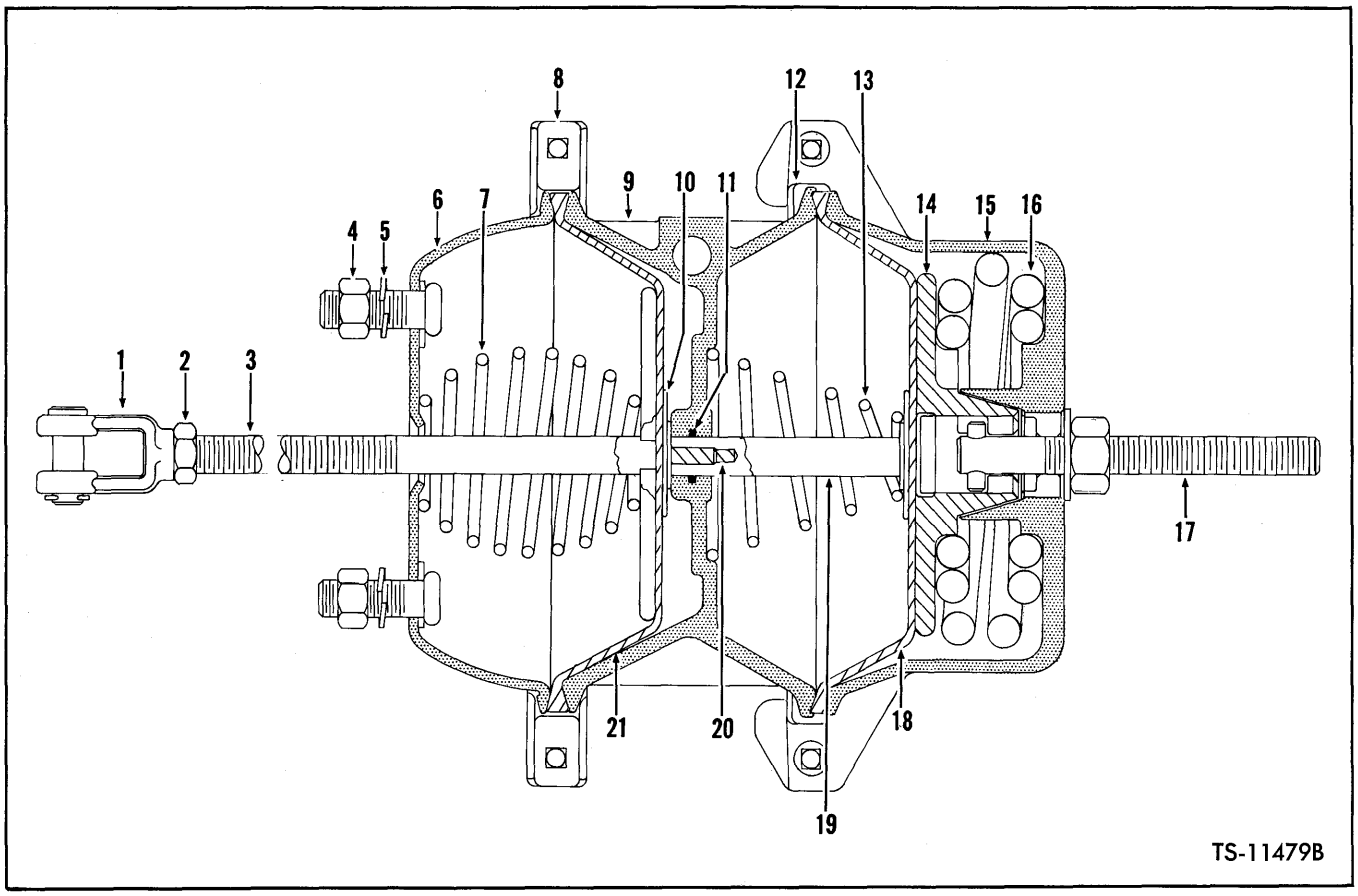

AXLE BRAKE AIR CHAMBER — REAR

For Serial: 425B101 & After

Item No.	Part No.	Description	No. Req'd.
A	123156	BRAKE, Air Chamber	1
1	949446	CLEVIS ASSY	1
2	8D-10	NUT, Jam	1
3	949447	PUSH ROD ASSY	1
4	62D-10	NUT, Mounting	2
5	23E-10	LKWSHR, Mounting	2
6	949448	HOUSING ASSY	1
7	949449	SPRING, Return	1
8	949450	CLAMP ASSY, Adapter to Housing	1
9	947372	ADAPTER	1
10	947363	PLATE, Diaphragm Back-Up	2
11	25K-30020	O-RING, Push Rod	1
12	949450	CLAMP ASSY, Adapter to Chamber	1
13	947368	SPRING, Return	1
14	949451	PLATE, Pressure	1
15	949452	CHAMBER, Air	1
16	949453	SPRING, Compression	1
17	947374	RELEASE STUD ASSY	1
18	944735	DIAPHRAGM	1
19	947373	PUSHROD, Adapter	1
20	947370	SCREW, Nylok	2
21	944735	DIAPHRAGM	1

WHEN ORDERING PARTS, ALWAYS STATE MODEL AND SERIAL NO. OF MACHINE

https://truckmanualshub.com/

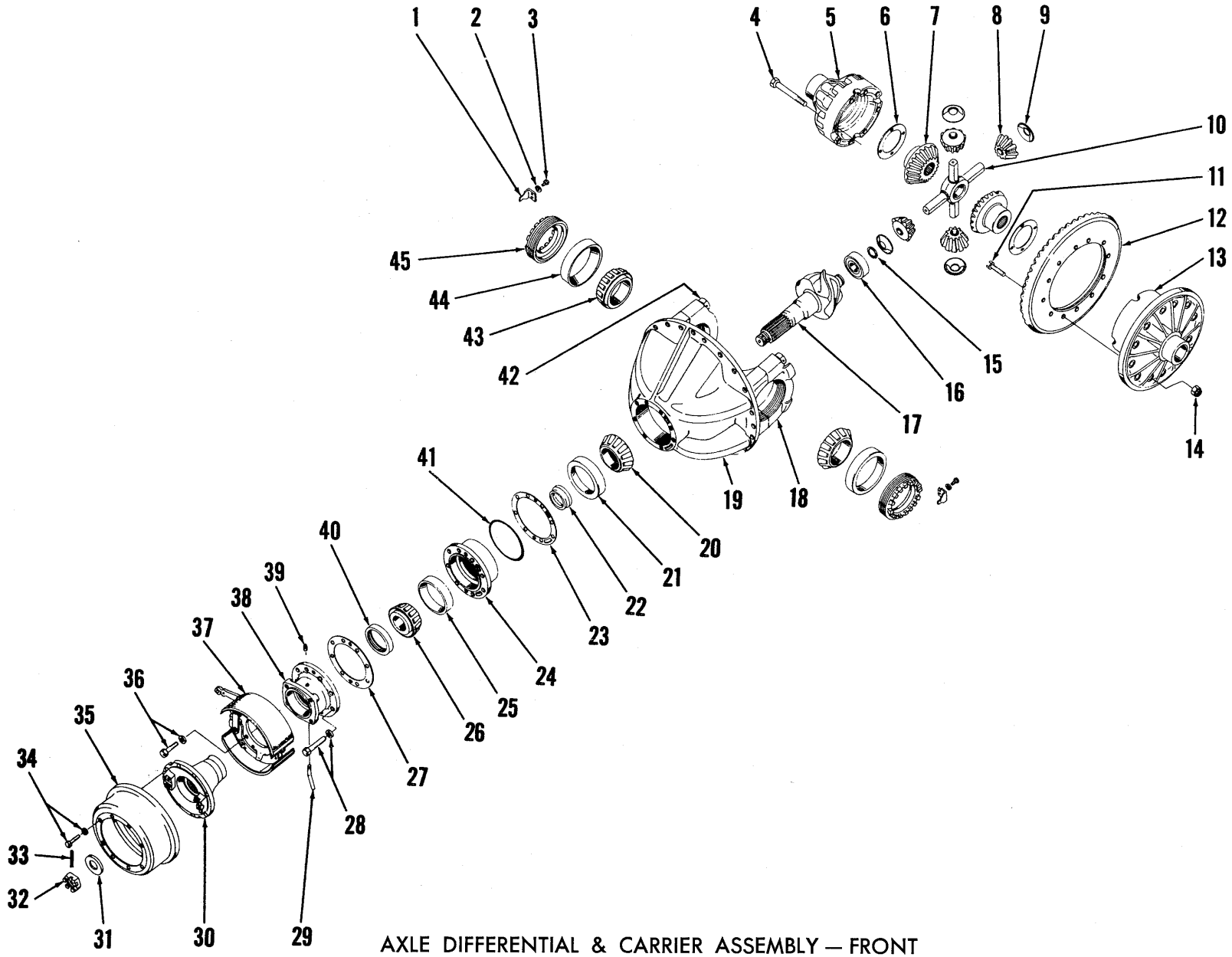

AXLE DIFFERENTIAL & CARRIER ASSEMBLY — FRONT
For Serial: 425A101 thru 263

TS-3774

https://truckmanualshub.com/

AXLE DIFFERENTIAL & CARRIER ASSEMBLY — FRONT

For Serial: 425A101 thru 263

Item No.	Part No.	Description	No. Req'd.
A	122675	DIFFERENTIAL & CARRIER ASSY (Inc. 1 thru 45)	1
1	107901	LOCK, Differential Adjusting Nut	2
2	4E-07	LKWSHR, Adjusting Nut Lock	2
3	3C-716	BOLT, Adjusting Nut Lock	2
4	107892	BOLT, Differential Case	8
5	———	§DIFFERENTIAL CASE, Plain Half (See 49)	1
6	116426	WASHER, Side Gear Thrust	2
7	107958	GEAR, Differential Side	2
8	815748	PINION, Differential	1
9	116422	WASHER, Differential Pinion Thrust	4
10	123934	SPIDER, Differential	1
11	24C-940	BOLT, Ring Gear	12
12	———	§RING GEAR (See 48)	1
13	———	§DIFFERENTIAL CASE, Flange Half (See 49)	1
14	104168	NUT, Ring Gear Bolt	12
15	224052	RING, Center Pinion Bearing Retainer	1
16	731995	BEARING, Inner Pinion	1
17	———	§PINION (See 48)	1
18	———	§CAP, Differential Carrier (See 19)	2
19	120769	CARRIER ASSY, Differential (Inc. 18, 42, 42A)	1
20	710987	CONE, Center Pinion Bearing	1
21	710986	CUP, Center Pinion Bearing	1
22	815352	SPACER KIT, Pinion Bearing	1
23	107973	‡SHIM, Pinion Bearing Cage — .004"	—
23A	107974	‡SHIM, Pinion Bearing Cage — .007"	—
23B	107975	‡SHIM, Pinion Bearing Cage — .010"	—
24	108451	CAGE ASSY, Pinion Bearing (Inc. 21, 25)	1
25	710035	CUP, Outer Pinion Bearing	1
26	710034	CONE, Outer Pinion Bearing	1
27	107971	GASKET, Oil Seal Retainer	1
28	1C-1036	BOLT, Oil Seal Retainer	8
28A	4E-10	LKWSHR, Oil Seal Retainer	8
29	107912	TUBE, Oil Drain	1
30	123909	FLANGE, Companion	1
31	107978	WASHER, Pinion Shaft Nut	1
32	107977	NUT, Pinion Shaft	1
33	1F-748	COTTER, Pinion Shaft	1
34	2C-720	BOLT, Brake Drum Attaching	8
34A	4E-07	LKWSHR, Brake Drum Attaching	8
35	107914	DRUM, Brake	1
36	1C-1024	BOLT, Brake Attaching	4
36A	4E-10	LKWSHR, Brake Attaching	4
37	———	BRAKE ASSY, Parking — See Index	1
38	108454	RETAINER, Pinion Oil Seal	1
39	10F-04	PLUG, Oil Seal Retainer	1
40	111368	SEAL, Pinion Oil	1
41	25K-40700	O-RING, Pinion Bearing Cage	1
42	107965	BOLT, Carrier Cap	4
42A	111657	†WASHER, Carrier Cap Bolt	4
42B	———	†‡LOCKWIRE, 18 Ga.	—
43	731981	CONE, Differential Bearing	2
44	672004	CUP, Differential Bearing	2
45	107969	NUT, Differential Adjusting	2
46	122676	†DIFFERENTIAL ASSY (Inc. 4 thru 14, 17)	1
47	116523	†DIFFERENTIAL BODY SUB ASSY (Inc. 4 thru 10, 13)	1
48	122497	†GEAR & PINION SET (Inc. 12, 17)	1
49	815648	†DIFFERENTIAL CASE KIT (Inc. 4 thru 6, 9, 13)	1

§Not Sold Separately
‡As Required
†Not Illustrated

WHEN ORDERING PARTS, ALWAYS STATE MODEL AND SERIAL NO. OF MACHINE

https://truckmanualshub.com/

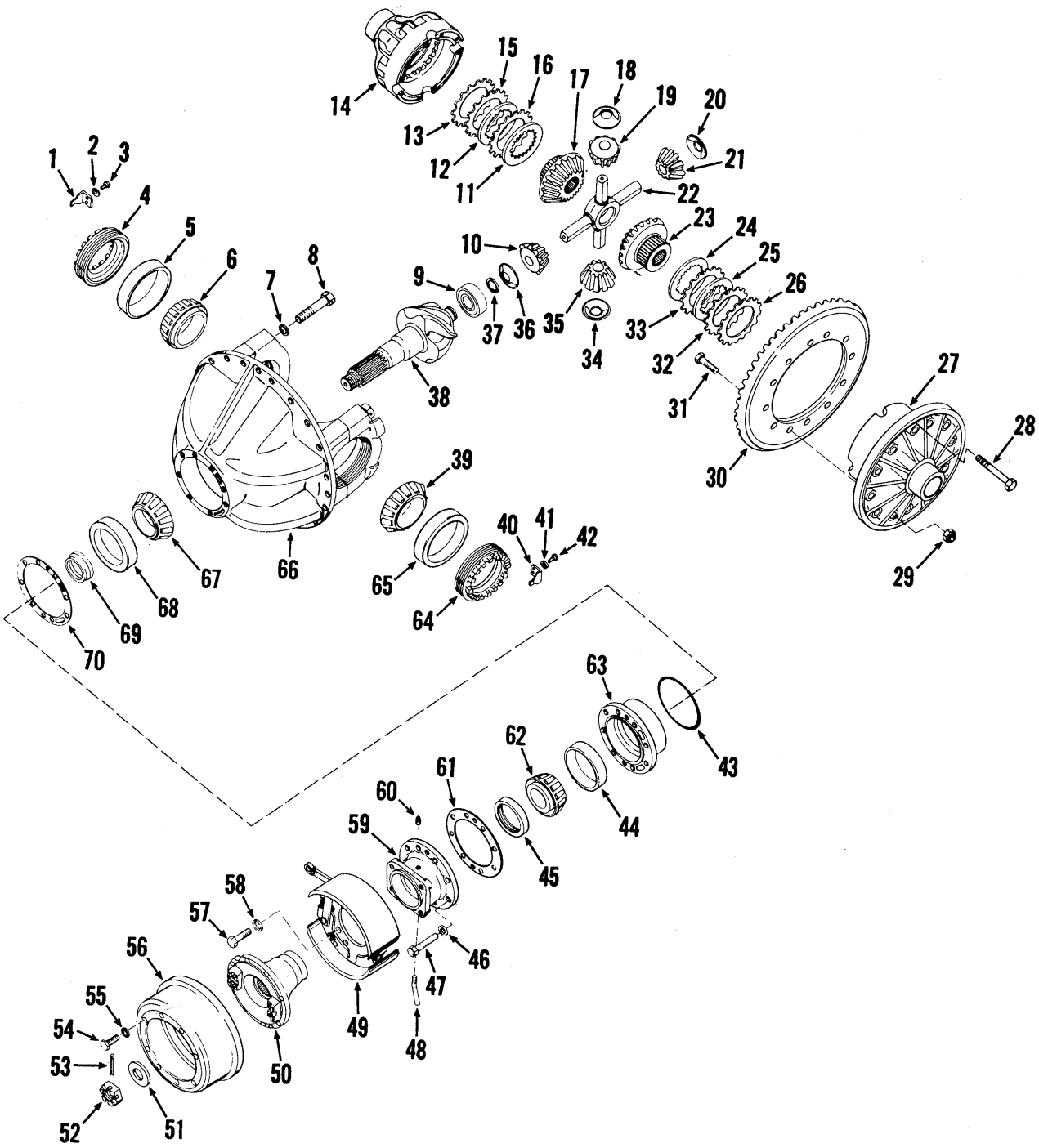

AXLE DIFFERENTIAL & CARRIER ASSEMBLY — FRONT — "LIMITED-SLIP"
For Serial: 425A264 thru 999

TS-11204

https://truckmanualshub.com/

AXLE DIFFERENTIAL & CARRIER ASSEMBLY — FRONT — "LIMITED-SLIP"

For Serial: 425B101 & After

Item No.	Part No.	Description	No. Req'd.
A	123641	DIFFERENTIAL & CARRIER ASSY (Inc. 1 thru 76)	1
1	107901	LOCK, Differential Adjusting Nut	1
2	4E-07	LKWSHR, Adjusting Nut Lock	1
3	1C-716	BOLT, Adjusting Nut Lock	1
4	122076	NUT, Differential Adjusting	1
5	672004	CUP, Differential Bearing	1
6	731981	CONE, Differential Bearing	1
7	3E-16	LKWSHR, Carrier Cap Bolt	4
8	123838	BOLT, Carrier Cap	4
9	731995	BEARING, Inner Pinion	1
10	815748	PINION DIFFERENTIAL (Inc. 19, 21, 35)	1
11	122069	DISC, Inner Clutch	1
12	122069	DISC, Inner Clutch	1
13	122068	DISC, Outer Clutch	1
14	———	§DIFFERENTIAL CASE, Plain Half — See 80	1
15	122068	DISC, Outer Clutch	1
16	122068	DISC, Outer Clutch	1
17	122065	GEAR, Differential Side	1
18	123381	WASHER, Differential Pinion Thrust	1
19	———	§PINION DIFFERENTIAL (See 10)	1
20	123381	WASHER, Differential Pinion Thrust	1
21	———	§PINION DIFFERENTIAL (See 10)	1
22	123934	SPIDER, Differential	1
23	122065	GEAR, Differential Side	1
24	122069	DISC, Inner Clutch	1
25	122069	DISC, Inner Clutch	1
26	122068	DISC, Outer Clutch	1
27	———	§DIFFERENTIAL CASE, Flanged Half — See 80	1
28	124233	BOLT, Differential Case	8
28A	123500	†WASHER, Differential Case	8
29	104168	NUT, Ring Gear Bolt	12
30	———	§RING GEAR — See 79	1
31	18C-940	BOLT, Ring Gear	12
32	122068	DISC, Outer Clutch	1
33	122068	DISC, Outer Clutch	1
34	123381	WASHER, Differential Pinion Thrust	1
35	———	§PINION DIFFERENTIAL (See 10)	1
36	123381	WASHER, Differential Pinion Thrust	1
37	224052	RING, Inner Pinion Bearing Retainer	1
38	———	§DRIVE PINION — See 79	1
39	731981	CONE, Differential Bearing	1
40	107901	LOCK, Differential Adjusting Nut	1
41	4E-07	LKWSHR, Adjusting Nut Lock	1
42	1C-716	BOLT, Adjusting Nut Lock	1
43	25K-40700	O-RING, Pinion Bearing Cage	1
44	108451	CAGE ASSY, Pinion Bearing (Inc. 45, 73)	1
45	710035	CUP, Outer Pinion Bearing	1
46	710034	CONE, Outer Pinion Bearing	1
47	111368	SEAL, Pinion Oil	1
48	107971	GASKET, Oil Seal Retainer	1
49	4E-10	LKWSHR, Oil Seal Retainer	8
50	1C-1036	BOLT, Oil Seal Retainer	8
51	4E-08	LKWSHR, Puller Bolt	2
52	1C-818	BOLT, Bearing Cup Cage Puller	2
53	123668	SLEEVE, Wear	1
54	229769	NUT, Brake Disc Mounting	8
55	112278	WASHER, Brake Disc Mounting	8
56	123654	FLANGE, Universal Joint	1
57	123655	DISC, Parking Brake	1
58	112278	WASHER, Brake Disc Mounting	8
59	18C-728	BOLT, Brake Disc Mounting	8
60	107977	NUT, Pinion Shaft	1
61	107978	WASHER, Pinion Shaft Nut	1
62	1F-748	COTTER, Pinion Shaft Nut	1
63	17C-1032	BOLT, Brake Mounting Bracket	6
63A	104412	WASHER, Brake Mounting Bracket	6
64	18C-1072	BOLT, Brake Mounting	2
65	124111	BRACKET, Cable Return	1
66	123656	BRAKE ASSY, Disc (Inc. 66A, 66B)	1
66A	949443	†PAD & LINING	2
66B	949444	†SPRING	2
66C	949445	†CAM, Brake Actuating	1
67	18D-10	NUT, Brake Mounting	2
67A	104412	WASHER, Brake Mounting	2
68	123824	BRACKET, Brake Mounting	1
69	123642	RETAINER, Pinion Oil Seal & Bearing	1
70	122076	NUT, Differential Adjusting	1
71	672004	CUP, Differential Bearing	1
72	710987	BEARING, Center Pinion	1
73	710986	CUP, Center Pinion Bearing	1
74	815352	SPACER KIT, Pinion Bearing	1
75	107973	‡SHIM, Pinion Bearing Cage — .004"	—
75A	107974	‡SHIM, Pinion Bearing Cage — .007"	—
75B	107975	‡SHIM, Pinion Bearing Cage — .010"	—
76	122070	CARRIER ASSY, Differential (Inc. 7, 8)	1
77	122495	†DIFFERENTIAL ASSY (Inc. 10 thru 36, 38)	1
78	122058	†DIFFERENTIAL BODY SUB ASSY (Inc. 10 thru 26, 27, 28, 32 thru 36)	1
79	122497	†GEAR & PINION SET (Inc. 30, 38)	1
80	122059	†DIFFERENTIAL CASE KIT (Inc. 14, 27, 28, 28A)	1

†Not Illustrated
§Not Sold Separately
‡As Required

WHEN ORDERING PARTS, ALWAYS STATE MODEL AND SERIAL NO. OF MACHINE

https://truckmanualshub.com/

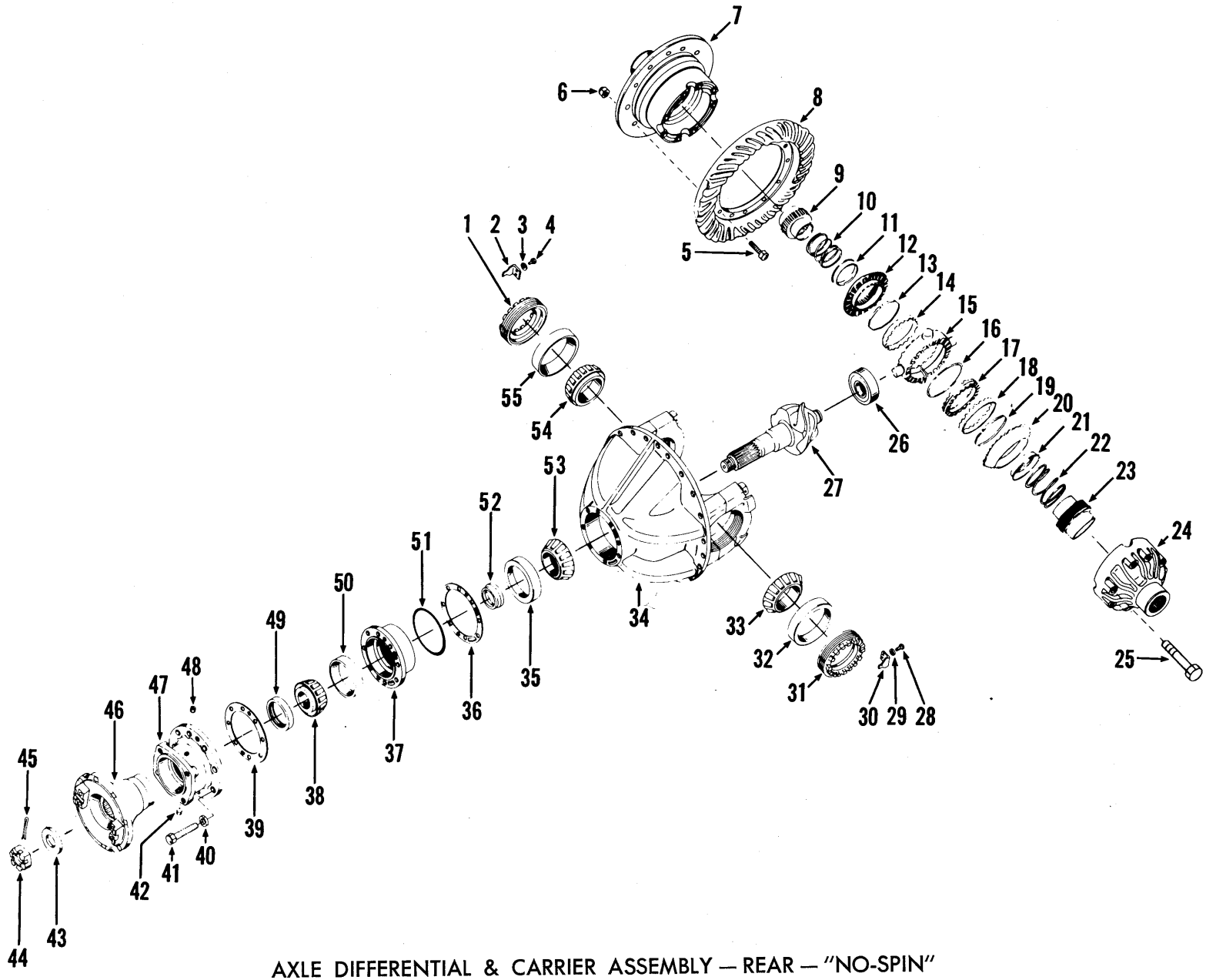

AXLE DIFFERENTIAL & CARRIER ASSEMBLY — REAR — "NO-SPIN"
For Serial: 425A101 thru 263

TS-6581

https://truckmanualshub.com/

AXLE DIFFERENTIAL & CARRIER ASSEMBLY — FRONT — "LIMITED-SLIP"

For Serial: 425A264 thru 999

Item No.	Part No.	Description	No. Req'd.
A	122493	DIFFERENTIAL & CARRIER ASSY (Inc. 1 thru 70)	1
1	107901	LOCK, Differential Adjusting Nut	1
2	4E-07	LKWSHR, Adjusting Nut Lock	1
3	1C-716	BOLT, Adjusting Nut Lock	1
4	122076	NUT, Differential Adjusting	1
5	672004	CUP, Differential Bearing	1
6	731981	CONE, Differential Bearing	1
7	3E-16	LKWSHR, Carrier Cap Bolt	4
8	123833	BOLT, Carrier Cap	4
9	731995	BEARING, Inner Pinion	1
10	815748	PINION, Differential (Inc. 19, 21, 35)	1
11	122069	DISC, Inner Clutch	1
12	122069	DISC, Inner Clutch	1
13	122068	DISC, Outer Clutch	1
14	———	§DIFFERENTIAL CASE, Plain Half — See 74	1
15	122068	DISC, Outer Clutch	1
16	122068	DISC, Outer Clutch	1
17	122065	GEAR, Differential Side	1
18	123381	WASHER, Differential Pinion Thrust	1
19	———	§PINION, Differential — See 10	1
20	123381	WASHER, Differential Pinion Thrust	1
21	———	§PINION, Differential — See 10	1
22	123934	SPIDER, Differential	1
23	122065	GEAR, Differential Side	1
24	122069	DISC, Inner Clutch	1
25	122069	DISC, Inner Clutch	1
26	122068	DISC, Outer Clutch	1
27	———	§DIFFERENTIAL CASE, Flanged Half — See 74	1
28	124233	BOLT, Differential Case	8
28A	123500	†WASHER, Differential Case	8
29	104168	NUT, Ring Gear	12
30	———	§RING, Gear — See 73	1
31	18C-940	BOLT, Ring Gear	1
32	122068	DISC, Outer Clutch	1
33	122068	DISC, Outer Clutch	1
34	123381	WASHER, Differential Pinion Thrust	1
35	———	§PINION, Differential — See 10	1
36	123381	WASHER, Differential Pinion Thrust	1
37	224052	RING, Pinion Bearing Retaining	1
38	———	§PINION — See 73	1
39	731981	CONE, Differential Bearing	1
40	107901	LOCK, Differential Adjusting Nut	1
41	4E-07	LKWSHR, Adjusting Nut Lock	1
42	1C-716	BOLT, Adjusting Nut Lock	1
43	25K-40700	O-RING, Pinion Bearing Cage	1
44	710035	CUP, Outer Pinion Bearing	1
45	111368	SEAL, Pinion Oil	1
46	4E-10	LKWSHR, Seal Retainer	8
47	1C-1036	BOLT, Seal Retainer	8
48	107912	TUBE, Oil Drain	1
49	———	BRAKE ASSY — Parking — See Index	1
50	123909	FLANGE, Companion	1
51	107978	WASHER, Pinion Shaft Nut	1
52	107977	NUT, Pinion Shaft	1
53	1F-748	COTTER, Pinion Shaft	1
54	2C-720	BOLT, Brake Drum	8
55	4E-07	LKWSHR, Brake Drum	8
56	107914	DRUM, Brake	1
57	1C-1024	BOLT, Brake Attaching	4
58	4E-10	LKWSHR, Brake Attaching	4
59	108454	RETAINER, Pinion Oil Seal	1
60	11F-04	PLUG, Oil Hole	1
61	107971	GASKET, Oil Seal Retainer	1
62	710034	CONE, Outer Pinion Bearing	1
63	108451	CAGE ASSY, Pinion Bearing (Inc. 44, 68)	1
64	122076	NUT, Differential Adjusting	1
65	672004	CUP, Differential Bearing	1
66	122070	CARRIER ASSY, Differential (Inc. 7, 8)	1
67	710987	CONE, Center Pinion Bearing	1
68	710986	CUP, Center Pinion Bearing	1
69	815352	SPACER KIT, Pinion Bearing	1
70	107973	‡SHIM, Pinion Bearing Cage — .004"	—
70A	107974	‡SHIM, Pinion Bearing Cage — .007"	—
70B	107975	‡SHIM, Pinion Bearing Cage — .010"	—
71	122495	DIFFERENTIAL ASSY (Inc. 10 thru 38)	1
72	122058	DIFFERENTIAL BODY SUB-ASSY (Inc. 10 thru 28, 32 thru 37)	1
73	122497	GEAR & PINION KIT (Inc. 30, 38)	1
74	122059	DIFFERENTIAL CASE KIT (Inc. 14, 27, 28, 28A)	1

§Not Sold Separately
†Not Illustrated
‡As Required

WHEN ORDERING PARTS, ALWAYS STATE MODEL AND SERIAL NO. OF MACHINE

https://truckmanualshub.com/

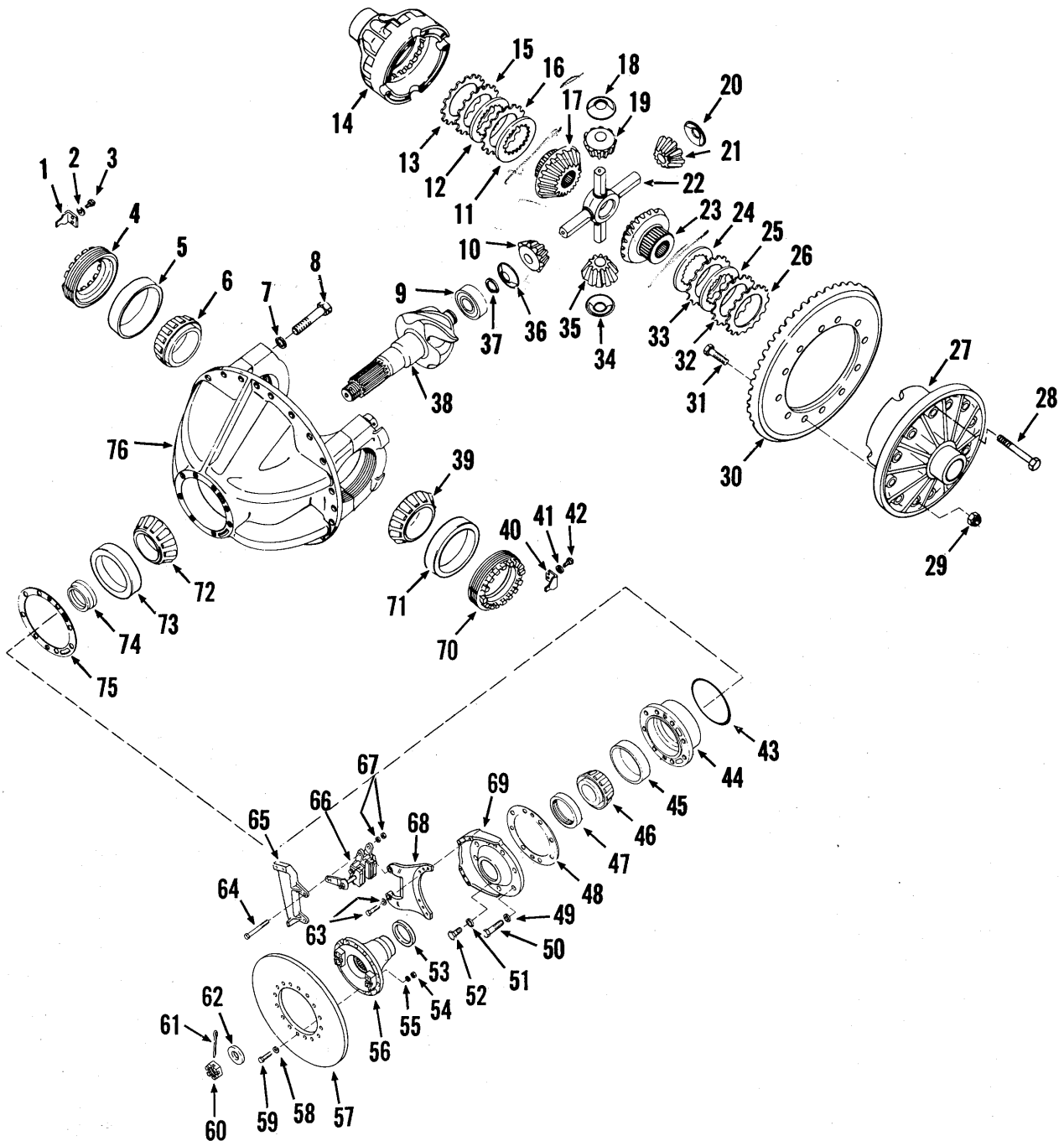

AXLE DIFFERENTIAL & CARRIER ASSEMBLY — FRONT — "LIMITED-SLIP"
For Serial: 425B101 & After

TS-11483

https://truckmanualshub.com/

AXLE DIFFERENTIAL & CARRIER ASSEMBLY — REAR — "NO-SPIN"

For Serial: 425A101 thru 263

Item No.	Part No.	Description	No. Req'd.
A	122677	DIFFERENTIAL & CARRIER ASSY (Inc. 1 thru 55)	1
B	108492	NO-SPIN (Inc. 9 thru 23)	1
1	107969	NUT, Differential Bearing Adjusting	1
2	107901	LOCK, Differential Bearing Adjusting Nut	1
3	4E-07	LKWSHR, Adjusting Nut Lock	1
4	1C-716	BOLT, Adjusting Nut Lock	1
5	18C-940	BOLT, Ring Gear Attaching	12
6	104168	NUT, Ring Gear Attaching	12
7	———	§DIFFERENTIAL CASE, Flange Half (See Item 59)	—
8	———	§RING GEAR (See Item 58)	—
9	947174	GEAR, Side	1
10	944106	SPRING	1
11	944107	RETAINER, Spring	1
12	944105	CAM & CLUTCH	1
13	944110	SPRING, Friction	1
14	944109	RING, Holdout	1
15	946136	SPIDER (Inc. 17)	1
16	944104	RING, Snap	1
17	———	§CENTER, Cam — See 15	1
18	944109	RING, Holdout	1
19	944110	SPRING, Friction	1
20	944105	CAM & CLUTCH	1
21	944107	RETAINER, Spring	1
22	944106	SPRING	1
23	944108	GEAR, Side	1
24	———	§DIFFERENTIAL CASE, Plain Half (See Item 59)	—
25	107892	BOLT, Differential Case	8
26	731995	BEARING, Inner Pinion	1
26A	224052	†RING, Pinion Bearing Retainer	1
27	———	§PINION (See Item 58)	—
28	1C-716	BOLT, Adjusting Nut Lock	1
29	4E-07	LKWSHR, Adjusting Nut Lock	1
30	107901	LOCK, Differential Bearing Adjusting Nut	1
31	107969	NUT, Differential Bearing Adjusting	1
32	672004	CUP, Differential Bearing	1
33	731981	CONE, Differential Bearing	1
34	120769	CARRIER ASSY, Differential (Inc. 34A, 34B, 34C)	1
34A	———	†§CAP, Differential Carrier (See Item 34)	—
34B	107965	†BOLT, Differential Carrier Cap	4
34C	111657	†WASHER, Differential Carrier Cap	4
35	710986	CUP, Center Pinion Bearing	1
36	107973	‡SHIM, Pinion Bearing Cage (.004)	—
36A	107974	‡SHIM, Pinion Bearing Cage (.007)	—
36B	107975	‡SHIM, Pinion Bearing Cage (.010)	—
37	108451	CAGE ASSY, Pinion Bearing (Inc. 35, 50)	1
38	710034	CONE, Outer Pinion Bearing	1
39	107971	GASKET, Oil Seal Retainer	1
40	4E-10	LKWSHR, Seal Retainer	8
41	1C-1036	BOLT, Seal Retainer	8
42	11F-04	PLUG, Oil Seal Retainer	1
43	107978	WASHER, Pinion Shaft Nut	1
44	107977	NUT, Pinion Shaft	1
45	1F-748	COTTER, Pinion Shaft	1
46	108455	FLANGE, Companion	1
47	108454	RETAINER, Pinion Oil Seal	1
48	11F-04	PLUG, Oil Seal Retainer	1
49	111368	SEAL, Pinion Oil	1
50	710035	CUP, Outer Pinion Bearing	1
51	25K-40700	O-RING, Pinion Bearing Cage	1
52	815352	SPACER KIT, Pinion Bearing	1
53	710987	CONE, Center Pinion Bearing	1
54	731981	CONE, Differential Bearing	1
55	672004	CUP, Differential Bearing	1
56	122678	†DIFFERENTIAL ASSY (Inc. 5 thru 25, 27)	1
57	112417	†DIFFERENTIAL BODY SUB ASSY (Inc. 7, 9 thru 25)	1
58	122498	†GEAR & PINION SET (Inc. 8, 27)	1
59	815773	†DIFFERENTIAL CASE KIT (Inc. 7, 24, 25)	1

†Not Illustrated
§Not Sold Separately
‡As Required

WHEN ORDERING PARTS, ALWAYS STATE MODEL AND SERIAL NO. OF MACHINE

https://truckmanualshub.com/

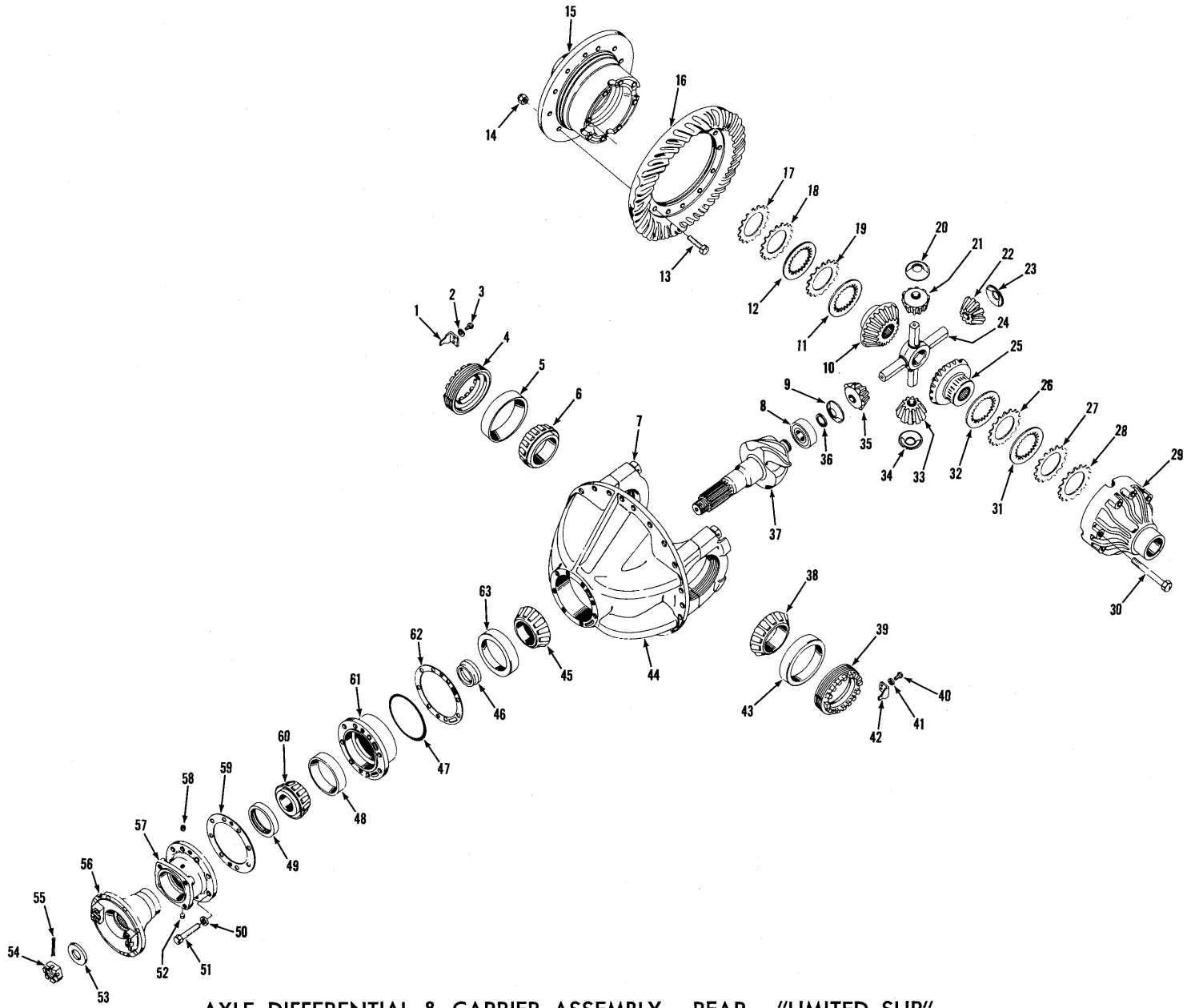

AXLE DIFFERENTIAL & CARRIER ASSEMBLY — REAR — "LIMITED SLIP"
For Serial: 425A264 & After

TS-10911

https://truckmanualshub.com/

AXLE DIFFERENTIAL & CARRIER ASSEMBLY — REAR — "LIMITED SLIP"

For Serial: 425A264 & After

Item No.	Part No.	Description	No. Req'd.
A	122494	DIFFERENTIAL & CARRIER ASSY (Inc. 1 thru 63)	1
1	107901	LOCK, Differential Adjusting Nut	1
2	4E-07	LKWSHR, Adjusting Nut Lock	1
3	1C-716	BOLT, Adjusting Nut Lock	1
4	122076	NUT, Differential Adjusting	1
5	672004	CUP, Differential Bearing	1
6	731981	CONE, Differential Bearing	1
7	107965	BOLT, Carrier Cap	4
7A	111657	†WASHER, Carrier Cap	4
8	731995	BEARING, Inner Pinion	1
9	123381	WASHER, Differential Pinion Thrust	1
10	122065	GEAR, Differential Side	1
11	122069	DISC, Inner Clutch	1
12	122069	DISC, Inner Clutch	1
13	18C-940	BOLT, Ring Gear	12
14	104168	NUT, Ring Gear	12
15	———	§DIFF. CASE, Flange Half — See 67	1
16	———	§RING GEAR — See 66	1
17	122068	DISC, Outer Clutch	1
18	122068	DISC, Outer Clutch	1
19	122068	DISC, Outer Clutch	1
20	123381	WASHER, Differential Pinion Thrust	1
21	815748	*PINION KIT, Differential	1
22	———	PINION, Differential — See 21	—
23	123381	WASHER, Differential Pinion Thrust	1
24	123934	SPIDER, Differential	1
25	122065	GEAR, Differential Side	1
26	122068	DISC, Outer Clutch	1
27	122068	DISC, Outer Clutch	1
28	122068	DISC, Outer Clutch	1
29	———	§DIFF. CASE, Plain Half — See 67	1
30	124233	BOLT, Differential Case	8
30A	123500	†WASHER, Differential Case	8
31	122069	DISC, Inner Clutch	1
32	122069	DISC, Inner Clutch	1
33	———	PINION, Differential — See 21	—
34	123381	WASHER, Differential Pinion Thrust	1
35	———	PINION, Differential — See 21	—
36	224052	RING, Inner Pinion Bearing Retaining	1
37	———	§PINION — See 66	1
38	731981	CONE, Differential Bearing	1
39	122076	NUT, Differential Adjusting	1
40	1C-716	BOLT, Adjusting Nut Lock	1
41	4E-07	LKWSHR, Adjusting Nut Lock	1
42	107901	LOCK, Differential Adjusting Nut	1
43	672004	CUP, Differential Bearing	1
44	122070	HOUSING, Diff. Carrier (Inc. 7, 7A)	1
45	710987	CONE, Center Pinion Bearing	1
46	815352	SPACER KIT, Pinion Bearing	1
47	25K-40700	O-RING, Pinion Bearing Cage	1
48	710035	CUP, Outer Pinion Bearing	1
49	111368	SEAL, Pinion Oil	1
50	4E-10	LKWSHR, Oil Seal Retainer	8
51	1C-1036	BOLT, Oil Seal Retainer	8
52	107912	TUBE, Oil Drain	1
53	107978	WASHER, Pinion Shaft	1
54	107977	NUT, Pinion Shaft	1
55	1F-748	COTTER, Pinion Shaft Nut	1
56	108455	FLANGE, Companion	1
57	108454	RETAINER, Pinion Oil Seal	1
58	11F-04	PLUG, Oil Seal Retainer	1
59	107971	GASKET, Oil Seal Retainer	1
60	710034	CONE, Outer Pinion Bearing	1
61	108451	CAGE ASSY, Pinion Bearing (Inc. 48, 63)	1
62	107973	‡SHIM, Bearing Cage — .004"	—
62A	107974	†‡SHIM, Bearing Cage — .007"	—
62B	107975	†‡SHIM, Bearing Cage — .010"	—
63	710986	CUP, Center Pinion Bearing	1
64	122496	†DIFF. ASSY (Inc. 9 thru 35, 37)	1
65	122058	†DIFF. BODY SUB-ASSY (Inc. 9 thru 12, 15, 17 thru 35)	1
66	122498	†GEAR & PINION SET (Inc. 16, 37)	1
67	122059	†DIFF. CASE KIT (Inc. 15, 29, 30, 30A)	1

†Not Illustrated
§Not Sold Separately
‡As Required
*NOTE: 815748 Pinion Kit consists of 4 — 116421 Pinions.

WHEN ORDERING PARTS, ALWAYS STATE MODEL AND SERIAL NO. OF MACHINE

https://truckmanualshub.com/

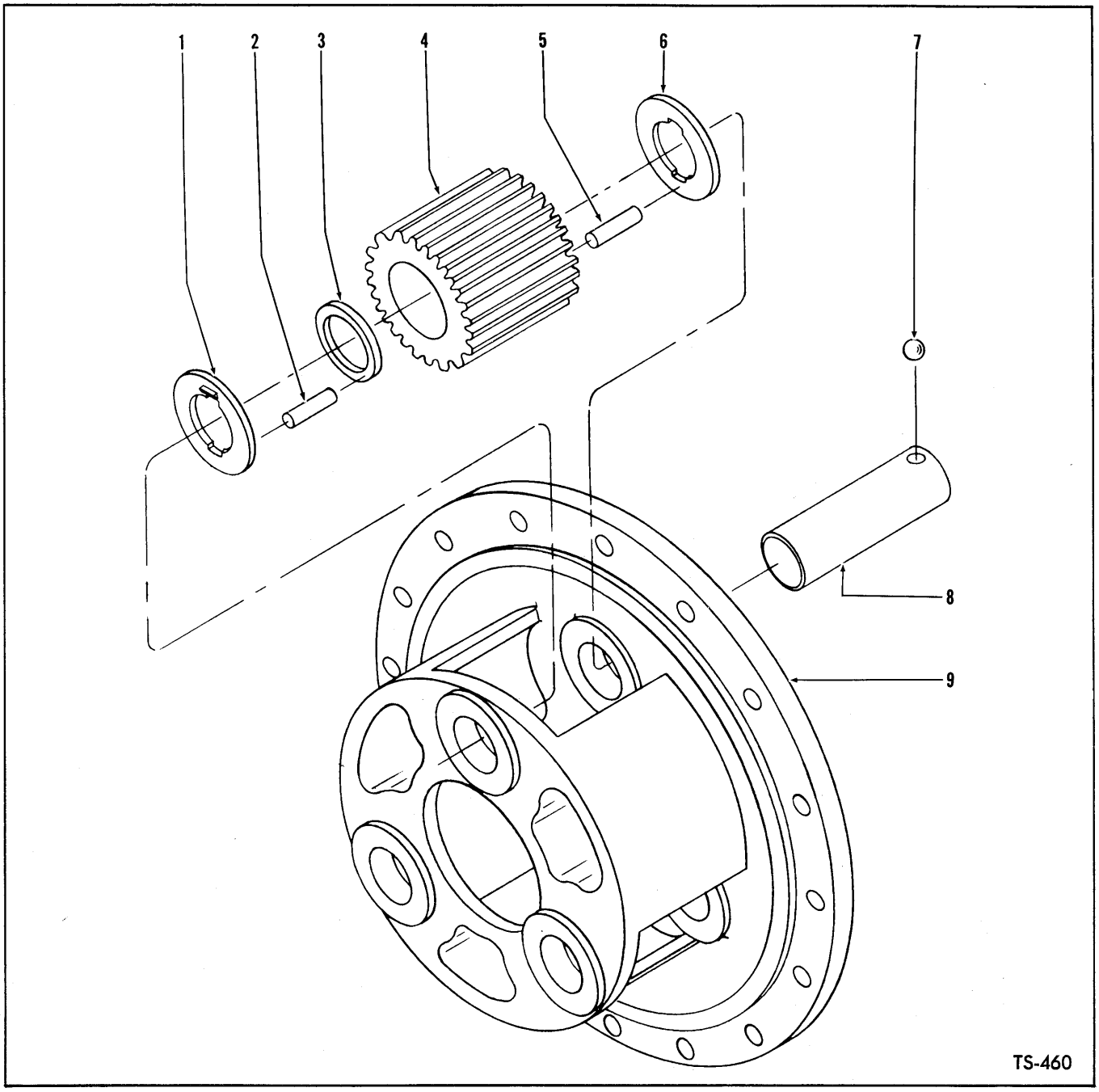

AXLE PLANET CARRIER ASSEMBLY — FRONT & REAR

Item No.	Part No.	Description	No. Req'd.
A	122505	CARRIER ASSY (Inc. 1 thru 9)	4
		NOTE: Four Carriers used on machine — Quantities listed below are for one Carrier	
1	107991	WASHER, Pinion Thrust	3
2	107992	ROLLER, Pinion	93
3	107993	SPACER, Pinion Roller	3
4	122506	PINION	3
5	107992	ROLLER, Pinion	93
6	107991	WASHER, Pinion Thrust	3
7	10J-16	BALL, Pinion Shaft Lock	3
8	107989	SHAFT, Pinion	3
9	117485	CARRIER, Planet	1

WHEN ORDERING PARTS, ALWAYS STATE MODEL AND SERIAL NO. OF MACHINE

https://truckmanualshub.com/

"B" GROUP

CONTENTS

Boom, Bellcranks, Pushrods, Bucket Leveler & Piping ..... B 3

Bucket Assembly Data ..... B 8

Brake Group:

- Brake Air Lines ..... B 11
- Brake Assembly — Front & Rear ..... B 18
- Brake Assembly — Parking ..... B 19
- Brake Controls ..... B 20
- Brake Controls Parking ..... B 21
- Brake Lever Assembly — Parking ..... B 23

https://truckmanualshub.com/

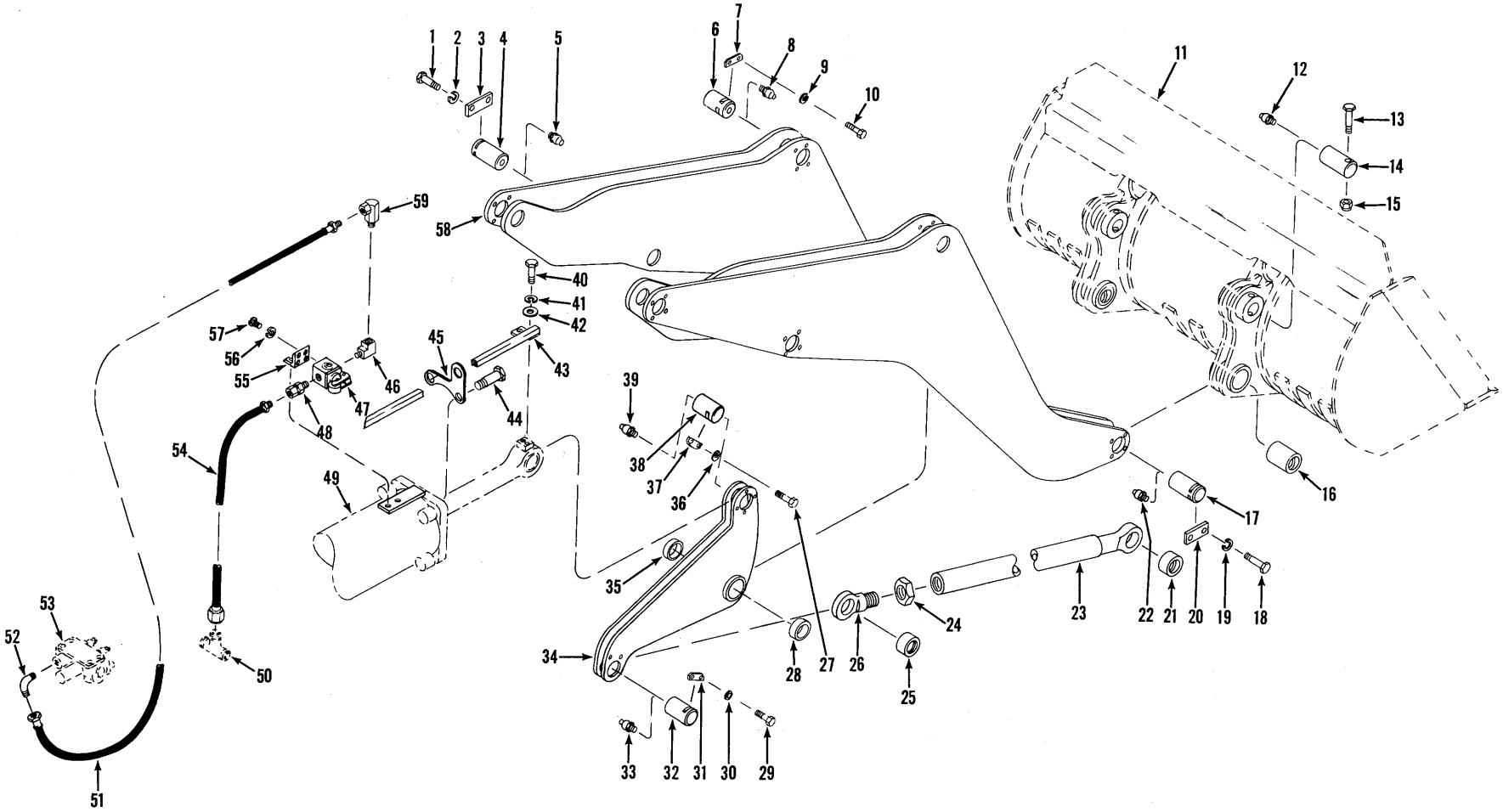

BOOM, BELLCRANK, PUSHRODS, BUCKET LEVELER AND PIPING

TS-10571

https://truckmanualshub.com/

BOOM, BELLCRANKS, PUSHRODS, BUCKET LEVELER & PIPING

For Serial: 425A101 thru 316, 318 thru 325, 327 thru 330, 332 thru 336

Item No.	Part No.	Description	No. Req'd.
1	24C-820	BOLT, Lockplate to Boom	8
2	4E-08	LKWSHR, Lockplate to Boom	8
3	1544087	LOCKPLATE, Pin	4
4		*BOOM CYLINDER PIN*	
4A	1510998	For Serial Group "A"	2
4B	1510996	For Serial Group "B"	2
5	10H-25	FITTING, Grease	2
6	1510997	PIN, Bellcrank	2
7	1544087	LOCKPLATE, Pin	4
8	10H-25	FITTING, Grease	2
9	4E-08	LKWSHR, Lockplate to Boom	8
10	24C-820	BOLT, Lockplate to Boom	8
11	———	BUCKET ASSY — See Index	—
12	10H-25	FITTING, Grease	2
13	24C-896	BOLT, Pin Retaining	2
14	1537762	PIN, Pushrod to Bucket	2
15	18D-08	NUT, Pin Retaining	2
16	1509786	BUSHING, Bucket	4
17	1510996	PIN, Boom to Bucket	2
18	24C-820	BOLT, Lockplate to Boom	8
19	4E-08	LKWSHR, Lockplate to Boom	8
20	1544087	LOCKPLATE, Pin	4
21	549669	BUSHING, Pushrod	2
22	10H-25	FITTING, Grease	2
23	1509729	PUSHROD, Bucket (Inc. 21)	2
24	1520686	NUT, Pushrod Jam	2
25	549669	BUSHING, Pushrod Eye	2
26	569708	EYE, Pushrod Adjusting (Inc. 25)	2
27	24C-820	BOLT, Lockplate to Bellcrank	8
28	1509720	BUSHING, Bellcrank	2
29	24C-820	BOLT, Lockplate to Bellcrank	4
30	4E-08	LKWSHR, Lockplate to Bellcrank	4
31	1544087	LOCKPLATE, Pin	2
32	1509721	PIN, Pushrod	2
33	10H-25	FITTING, Grease	2
34	1510105	BELLCRANK (Inc. 28, 35)	2
35	1509720	BUSHING, Bellcrank	2
36	4E-08	LKWSHR, Lockplate to Bellcrank	8
37	1544087	LOCKPLATE, Pin	4
38	1537763	PIN, Bucket Cylinder	2
39	10H-25	FITTING, Grease	2
40	24C-620	BOLT, Cam to Cylinder	4
41	4E-06	LKWSHR, Cam to Cylinder	4
42	619021	WASHER, Cam to Cylinder	4
43	1543303	CAM, Bucket Leveler	1
43A	1528638	†BRACKET, Cam	1
44	———	OMIT, Not Used This Application	—
45	———	OMIT, Not Used This Application	—
46	29F-1	ELBOW, Adapter to Valve	1
47	———	VALVE ASSY, Bucket Leveler — Air — See Index	—
48	36F-2	ADAPTER, Hose to Valve	1
49	———	CYLINDER ASSY, Bucket — See Index	—
50	———	TEE, See Brake Air Lines	—
51	1517049	HOSE, Pilot Valve to Bucket Leveler Valve	1
52	941421	ELBOW, Hose to Valve	1
53	———	PILOT VALVE — See Index	—
54	1543007	HOSE, Bucket Leveler Valve to Tee	1
55	———	BRACKET — Part of Cylinder	—
56	12E-10	LKWSHR, Bucket Leveler Valve Mounting	2
57	86G-1010	SCREW, Bucket Leveler Valve Mounting	2
58	1509713	BOOM	1
59	31F-2	ADAPTER, Elbow to Hose	1

†Not Illustrated
Serial Group "A": 425A101 thru 316, 319 thru 325, 327 thru 336.
Serial Group "B": 425A318.

WHEN ORDERING PARTS, ALWAYS STATE MODEL AND SERIAL NO. OF MACHINE

https://truckmanualshub.com/

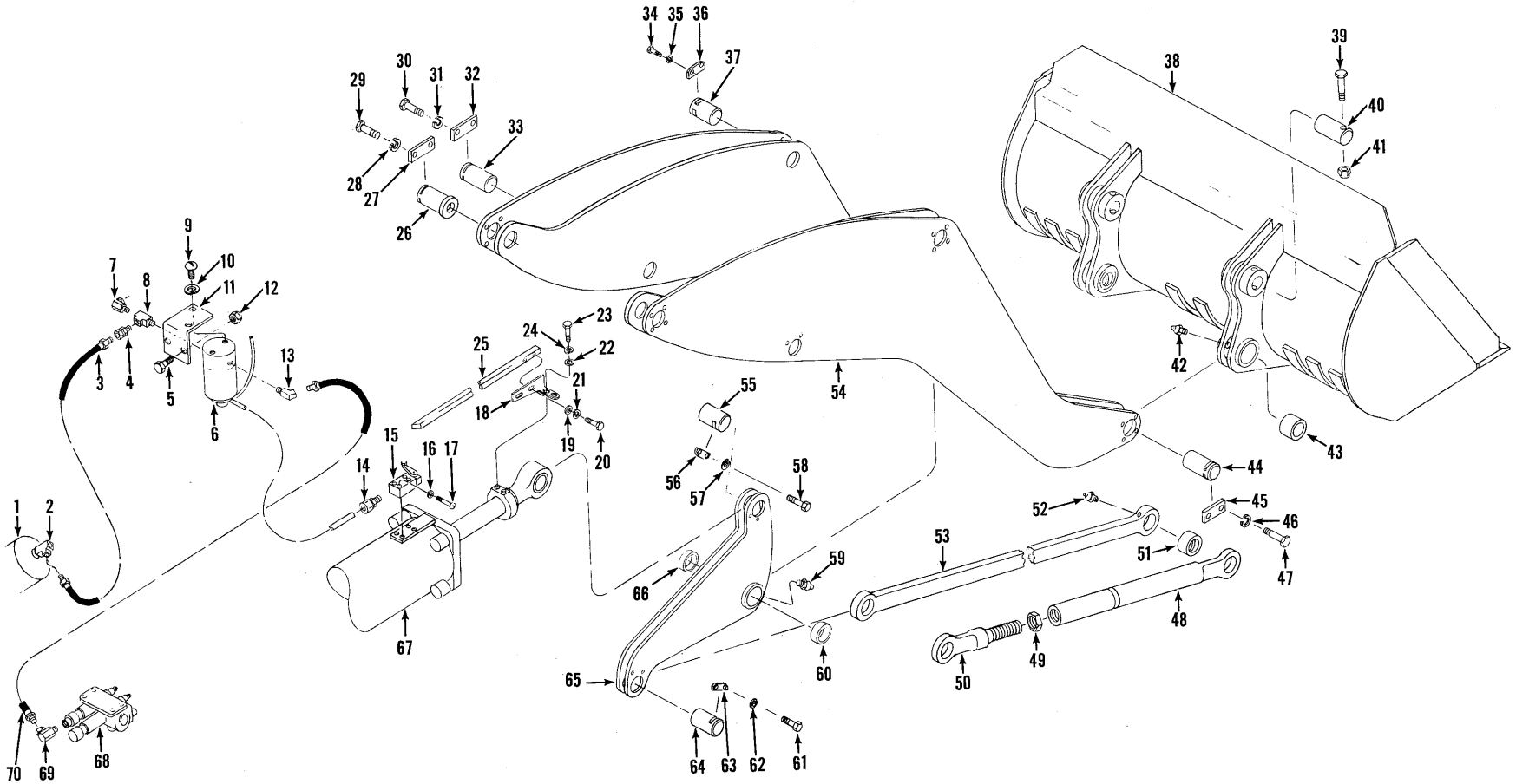

BOOM, BELLCRANKS, PUSHRODS, BUCKET LEVELER & PIPING
For Serial: 425A317, 326, 331, 337 thru 999

TS-11529

https://truckmanualshub.com/

BOOM, BELLCRANKS, PUSHRODS, BUCKET LEVELER & PIPING

For Serial: 425A317, 326, 331, 337 thru 999

Item No.	Part No.	Description	No. Req'd.
1	———	AIR RESERVOIR — See Index	—
2	36F-2	TEE, Reservoir to Hose	1
3	593267	HOSE, Reservoir to Solenoid	1
3A	75F-2	†COUPLING, Hose to Reservoir	1
3B	25F-2	†ELBOW, Hose to Reservoir	1
3C	19F-5	†BUSHING, Hose to Reservoir	1
3D	5K-220	†NIPPLE, Hose to Reservoir	1
4	———	OMIT, Not Used This Application	—
5	24C-416	BOLT, Bracket Mounting	2
6	1510445	VALVE, Solenoid	1
7	———	OMIT, Not Used This Application	—
8	31F-2	ADAPTER	1
9	86G-1010	SCREW, Solenoid Mounting	2
10	12E-10	LKWSHR, Solenoid Mounting	2
11	1548001	BRACKET, Solenoid Mounting	1
12	18D-04	NUT, Bracket Mounting	2
13	81F-1	ELBOW, Solenoid to Hose	1
14	1549705	CONNECTOR, Cable	1
15	308301	SWITCH, Limit	1
16	17E-10	LKWSHR, Limit Switch Mounting	4
17	41G-1024	SCREW, Limit Switch Mounting	4
18	1512173	BRACKET, Cam Rod Mounting	1
19	619021	WASHER, Cam to Bracket	2
20	24C-620	BOLT, Cam to Bracket	2
21	4E-06	LKWSHR, Cam to Bracket	2
22	619021	WASHER, Bracket to Cylinder	2
23	24C-620	BOLT, Bracket to Cylinder	2
24	4E-06	LKWSHR, Bracket to Cylinder	2
25	1528637	CAM, Limit Switch Lever	1
26	1510995	PIN, Boom to Frame	2
27	1544087	LOCKPLATE, Pin	4
28	4E-08	LKWSHR, Lockplate to Boom	8
29	24C-820	BOLT, Lockplate to Boom	8
30	24C-820	BOLT, Lockplate to Boom	4
31	4E-08	LKWSHR, Lockplate to Boom	4
32	1544087	LOCKPLATE, Pin	2
33	1510996	PIN, Boom to Boom Cylinder	2
34	24C-820	BOLT, Lockplate to Boom	8
35	4E-08	LKWSHR, Lockplate to Boom	8
36	1540887	LOCKPLATE, Pin	4
37	1510997	PIN, Boom to Bellcrank	2
38	———	BUCKET — See Index	—
39	24C-896	BOLT, Pin Retaining	2
40	1537762	PIN, Pushrod to Bucket	2
41	18D-08	NUT, Pin Retaining Bolt	2
42	10H-25	FITTING, Pin Grease	4
43	1509786	BUSHING, Boom to Bucket	4
44	1510996	PIN, Boom to Bucket	2
45	1544087	LOCKPLATE, Pin	4
46	4E-08	LKWSHR, Lockplate to Boom	8
47	24C-820	BOLT, Lockplate to Boom	8
48	1509729	PUSHROD, Bucket (Serial Group "A" only) (Inc. 51)	2
49	1520686	NUT, Pushrod Jam (Serial Group "A" only)	2
50	569708	EYE, Pushrod Adjusting (Serial Group "A" only) (Inc. 51)	2
51	549669	BUSHING, Pushrod	4
52	10H-25	FITTING, Pin Grease	4
53	1513230	PUSHROD, Bucket (Serial Group "B" only) (Inc. 51)	2
54	1509713	BOOM ASSY	2
55	1537763	PIN, Bellcrank to Cylinder	2
56	1544087	LOCKPLATE, Pin	2
57	4E-08	LKWSHR, Lockplate to Bellcrank	4
58	24C-820	BOLT, Lockplate to Bellcrank	4
59	632289	FITTING, Pin Grease	2
60	1509720	BUSHING, Bellcrank	2
61	24C-820	BOLT, Lockplate to Bellcrank	4
62	4E-08	LKWSHR, Lockplate to Bellcrank	4
63	1544087	LOCKPLATE, Pin	2
64	1509721	PIN, Bellcrank to Pushrod	2
65	1512423	BELLCRANK (Inc. 60, 66)	2
66	1509720	BUSHING, Bellcrank	2
67	———	CYLINDER, Bucket — See Index	—
68	———	CONTROL VALVE — See Index	—
69	1311154	ADAPTER, Hose to Valve	1
70	593495	HOSE, Valve to Solenoid	1

†Not Illustrated
Serial Group "A": 425A317, 326, 331, 337 thru 380.
Serial Group "B": 425A381 thru 999.

WHEN ORDERING PARTS, ALWAYS STATE MODEL AND SERIAL NO. OF MACHINE

Printed in U.S.A.

https://truckmanualshub.com/

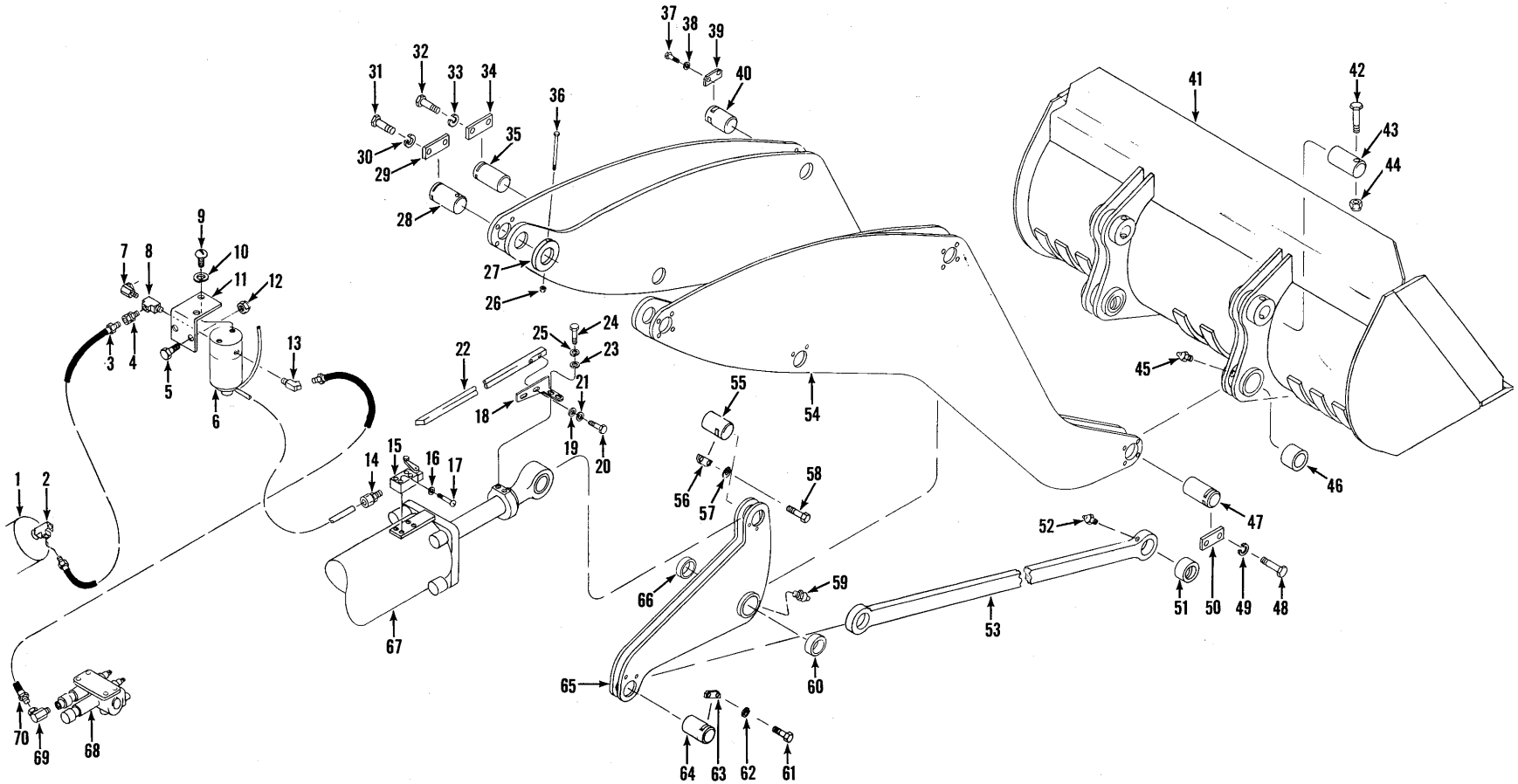

BOOM, BELLCRANKS, PUSHRODS, BUCKET LEVELER & PIPING
For Serial: 425B101 & After

TS-11482

https://truckmanualshub.com/

BOOM, BELLCRANKS, PUSHRODS, BUCKET LEVELER & PIPING

For Serial: 425B101 & After

Item No.	Part No.	Description	No. Req'd.
1	———	RESERVOIR — See Index	—
2	30F-3	TEE, Reservoir to Hose	1
3	1542822	HOSE, Reservoir to Valve	1
4	36F-2	UNION, Adapter	1
5	24C-412	BOLT, Bracket Mounting	2
6	1510445	VALVE, Solenoid	1
7	31F-2	ADAPTER	1
8	30F-3	TEE, Solenoid to Hose	1
9	86G-1010	SCREW, Solenoid Mounting	2
10	12E-10	LKWSHR, Solenoid Mounting	2
11	1548001	BRACKET, Solenoid Mounting	1
12	18D-04	NUT, Bracket Mounting	2
13	81F-1	ELBOW, Solenoid to Hose	1
14	1549705	CONNECTOR, Cable	1
15	308031	SWITCH, Limit	1
16	17E-10	LKWSHR, Limit Switch Mounting	4
17	41G-1024	BOLT, Limit Switch Mounting	4
18	1513805	BRACKET, Cam Rod Mounting	1
19	619021	WASHER, Cam to Bracket	2
20	24C-620	BOLT, Cam to Bracket	2
21	4E-06	LKWSHR, Cam to Bracket	2
22	1528637	CAM, Limit Switch Lever	1
23	619021	WASHER, Bracket to Cylinder	2
24	24C-620	BOLT, Bracket to Cylinder	2
25	4E-06	LKWSHR, Bracket to Cylinder	2
26	18D-08	NUT, Pin Retaining Bolt	2
27	1514222	COLLAR, Pin Retaining	2
28	1514224	PIN, Boom to Frame	2
29	1544087	LOCKPLATE, Pin	4
30	4E-08	LKWSHR, Lockplate to Boom	8
31	24C-820	BOLT, Lockplate to Boom	8
32	24C-820	BOLT, Lockplate to Boom	8
33	4E-08	LKWSHR, Lockplate to Boom	8
34	1544087	LOCKPLATE, Pin	4
35	1510996	PIN, Boom Cylinder	2
36	24C-8112	BOLT, Pin Retaining	1
37	24C-820	BOLT, Lockplate to Boom	8
38	4E-08	LKWSHR, Lockplate to Boom	8
39	1544087	LOCKPLATE, Pin	4
40	1510997	PIN, Boom to Bellcrank	2
41	———	BUCKET — See Index	—
42	24C-896	BOLT, Pin Retaining	2
43	1537762	PIN, Pushrod to Bucket	2
44	18D-08	NUT, Pin Retaining Bolt	2
45	10H-25	FITTING, Bushing Grease	2
46	1509786	BUSHING, Boom to Bucket	4
47	1510996	PIN, Boom to Bucket	2
48	24C-820	BOLT, Lockplate to Boom	8
49	4E-08	LKWSHR, Lockplate to Boom	8
50	1544087	LOCKPLATE, Pin	4
51	549669	BUSHING, Pushrod	4
52	10H-25	FITTING, Pin Grease	4
53	1513229	PUSHROD, Bucket (Inc. 51)	2
54	1512655	BOOM ASSY	1
55	1537763	PIN, Bellcrank to Cylinder	1
56	1544087	LOCKPLATE, Pin	2
57	4E-08	LKWSHR, Lockplate to Bellcrank	4
58	24C-820	BOLT, Lockplate to Bellcrank	4
59	10H-25	FITTING, Pin Grease	2
60	1509720	BUSHING, Bellcrank	2
61	24C-820	BOLT, Lockplate to Bellcrank	4
62	4E-08	LKWSHR, Lockplate to Bellcrank	4
63	1544087	LOCKPLATE, Pin	2
64	1509721	PIN, Bellcrank to Pushrod	2
65	1512423	BELLCRANK (Inc. 60, 66)	2
66	1509720	BUSHING, Bellcrank	2
67	———	CYLINDER, Bucket — See Index	—
68	———	CONTROL VALVE — See Index	—
69	1311154	ADAPTER, Hose to Valve	1
70	593495	HOSE, Solenoid to Control Valve	1

WHEN ORDERING PARTS, ALWAYS STATE MODEL AND SERIAL NO. OF MACHINE

https://truckmanualshub.com/

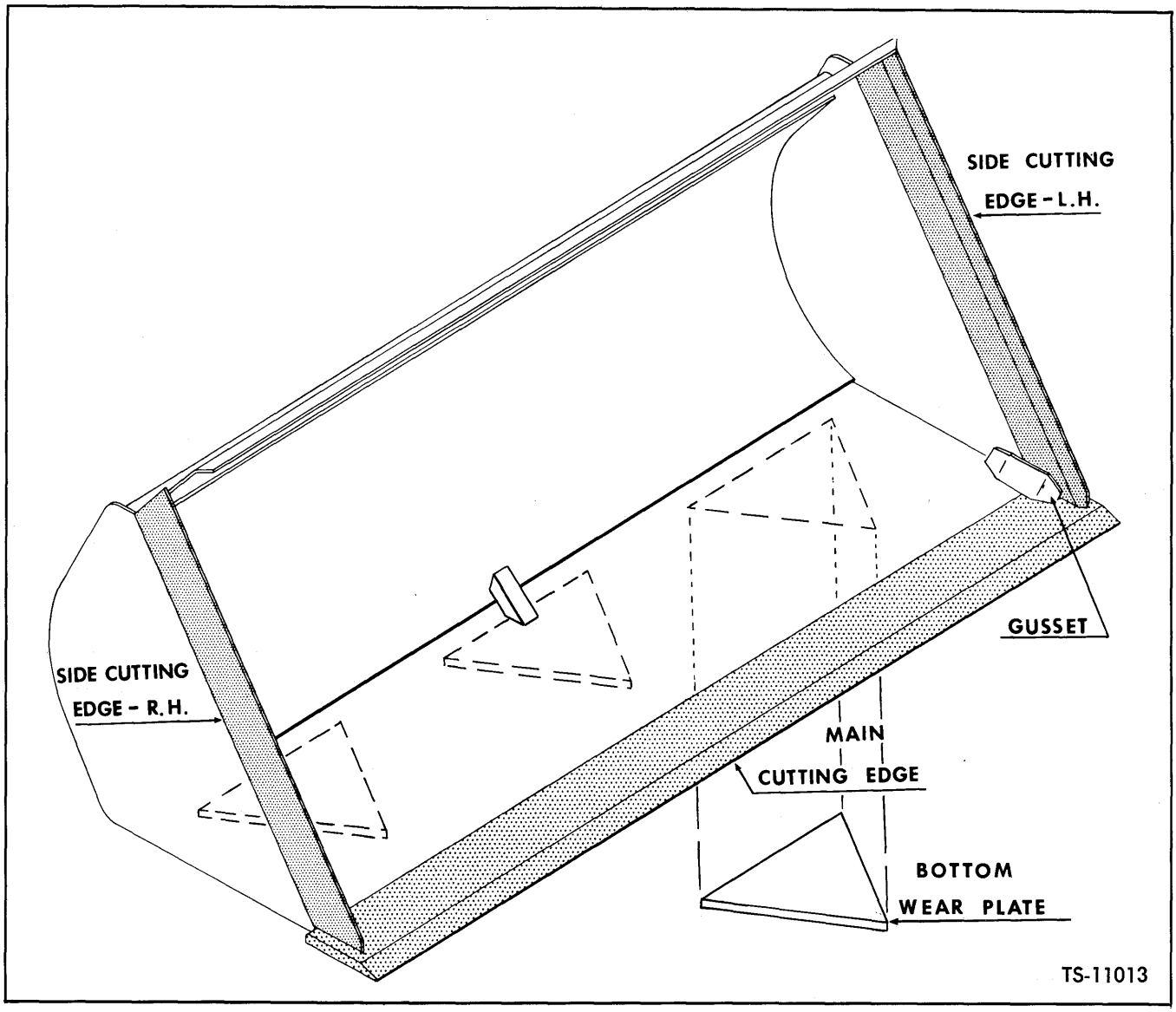

BUCKET ASSEMBLY DATA

BUCKET				MAIN CUTTING EDGE		SIDE CUTTING EDGES			GUSSET
Item No.	S.A.E. Heaped Capacity Cu. Yd.	Width "	Part No.	Part No.	Size "	L.H. Part No.	R.H. Part No.	Size "	2 Req'd. Part No.
1	6	138½	*1544478	1534902	2 x 12½ x 138½	———	———	———	1536086
2	6½	138½	*1547077	1534902	2 x 12½ x 138½	———	———	———	1536086
3	6½	138½	*1509882	1506345	2 x 12½ x 138½	1505992	1505993	1¼ x 9 x 59⅜	1536086
4	6½	138½	*1547095	1546990	2 x 24½ x 138½	———	———	———	1536086
5	7	138½	*1547256	1534902	2 x 12½ x 138½	1546991	1546992	1¼ x 9 x 63	1536086
6	8	138½	*1547312	1534902	2 x 12½ x 138½	1547274	1547275	1¼ x 9 x 68	1536086
7	14	166½	*1547402	1544960	2 x 12½ x 166½	1547347	1547346	1¼ x 9 x 81	1536086

*NOTE: These Buckets use 4 — 1547255 Wear Plates & 12 — 1537996 Wear Plate Retainers.

WHEN ORDERING PARTS, ALWAYS STATE MODEL AND SERIAL NO. OF MACHINE

https://truckmanualshub.com/

https://truckmanualshub.com/

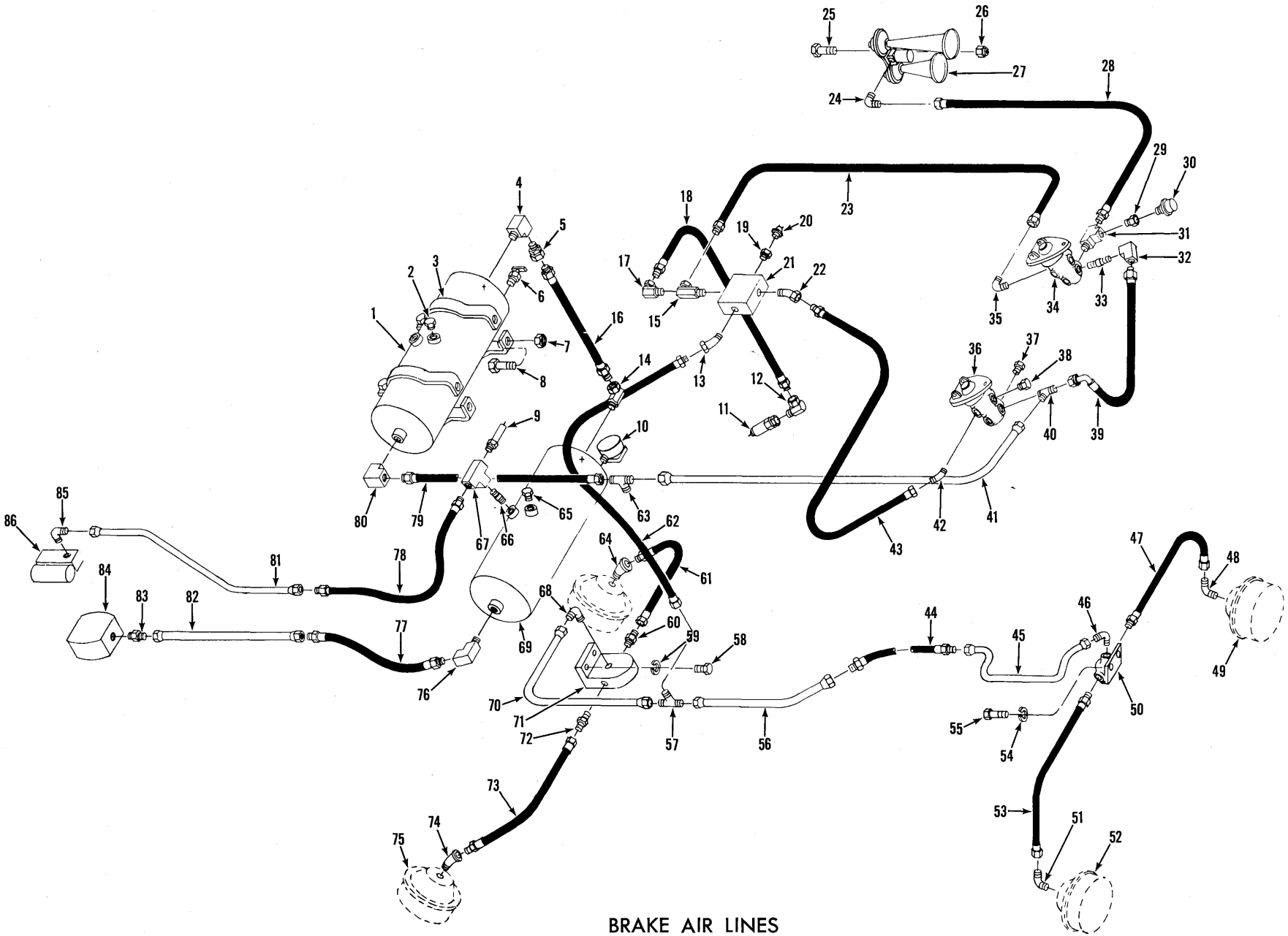

BRAKE AIR LINES

For Serial: 425A101 thru 316, 318 thru 325, 327 thru 330, 332 thru 336

TS-10635

https://truckmanualshub.com/

BRAKE AIR LINES

For Serial: 425A101 thru 316, 318 thru 325, 327 thru 330, 332 thru 336

Item No.	Part No.	Description	No. Req'd.
1	539164	*RESERVOIR, Air (B.W. #225224)	1
2	40K-06	PLUG, Air Reservoir	2
3	941813	*BRACKET, Reservoir to Bracket (B.W. #221399)	4
4	1542832	ELBOW, Check Valve to Reservoir	1
5	593370	VALVE, Check (B.W. #228194)	1
6	72F-2	DRAIN COCK, Reservoir	1
7	18D-06	NUT, Bracket to Bracket	8
8	24C-616	BOLT, Bracket to Bracket	8
9	507815	*VALVE, Safety (B.W. #205105)	1
10	1505580	*VALVE, Automatic Drain (B.W. #281823)	1
11	217927	VALVE, Declutch — See Index	1
12	31F-1	ADAPTER UNION — Hose to Declutch Valve	1
13	33F-4	ADAPTER UNION, Hose to Double Check Valve	1
14	711053	ADAPTER UNION, Hose to Reservoir	1
15	356609	ADAPTER UNION	1
16	1542821	HOSE, Reservoir to Reservoir	1
17	31F-1	ADAPTER UNION, Hose to Double Check Valve	1
18	540915	HOSE, Double Check Valve to Declutch Valve	1
19	19F-4	BUSHING, Reducing	1
20	636260	SWITCH, Pressure	1
21	1532592	*VALVE, Double Check (B.W. #228194)	1
21A	24C-644	†BOLT, Double Check Valve Mounting	1
21B	4E-06	†LKWSHR, Double Check Valve Mounting	1
22	33F-4	ADAPTER UNION, Hose to Double Check Valve	1
23	1545549	HOSE, Brake Valve to Double Check Valve	1
24	42F-3	ELBOW, Hose to Air Horn	1
25	24C-416	BOLT, Air Horn Mounting	2
26	18D-04	NUT, Air Horn Mounting	2
27	547631	HORN (Inc. 27A)	1
27A	947160	†SOLENOID, Horn	1
28	1543947	HOSE, Brake Valve to Horn	1
29	19F-1	BUSHING, Reducing	1
30	1534135	SENDER, Air Pressure	1
31	30F-1	TEE, Hose to Brake Valve	1
32	27F-3	ELBOW, Hose to Brake Valve	1
33	5K-420	NIPPLE, Elbow to Brake Valve	1
34	———	VALVE, Brake — See Index	—
35	42F-9	ELBOW, Hose to Brake Valve	1
36	———	VALVE, Brake — See Index	1
37	40K-04	PLUG, Brake Valve	3
38	40K-08	PLUG, Brake Valve	8
39	1545548	HOSE, Brake Valve to Brake Valve	1
40	46F-9	TEE, Hose to Valve	1
41	1542780	TUBE, Reservoir to Brake Valve	1
42	84F-7	ELBOW, Hose to Brake Valve	1
43	1542820	HOSE, Double Check Valve to Brake Valve	1
44	1538454	HOSE, Center Pivot	1
45	1548634	TUBE, Q.R.V. to Center Pivot Hose	1
46	42F-9	ELBOW, Q.R.V. to Tube	1
47	570145	HOSE, Q.R.V. to Air Chamber	1
48	42F-6	ELBOW, Hose to Air Chamber	1
49	———	AIR CHAMBER — See Index	—
50	521439	*VALVE, Quick Release (B.W. #228691)	1
51	42F-6	ELBOW, Hose to Air Chamber	1
52	———	AIR CHAMBER — See Index	—
53	570145	HOSE, Q.R.V. to Air Chamber	1
54	4E-05	LKWSHR, Q.R.V. Mounting	2
55	18C-510	BOLT, Q.R.V. Mounting	2
56	1538740	TUBE, Tube to Pivot Hose	1
57	44F-8	TEE, Hose to Tubes	1
58	24C-510	BOLT, Q.R.V. Mounting	2
59	4E-05	LKWSHR, Q.R.V. Mounting	2
60	38F-9	ADAPTER, Q.R.V. to Hose	1
61	569719	HOSE, Q.R.V. to Air Chamber	1
62	1542820	HOSE, Double Check Valve to Air Chambers	1
63	1542831	TEE, Bucket Leveler Connecting	1
64	25F-2	ELBOW, Hose to Air Chamber	1
65	40K-06	PLUG, Air Reservoir	1
66	5K-308	NIPPLE, Tee to Reservoir	1
67	20F-19	TEE, Hose & Safety Valve to Reservoir	1
68	42F-9	ELBOW, Tube to Q.R.V.	1
69	539164	*RESERVOIR, Air (B.W. #225224)	1
70	1542776	TUBE, Tee to Quick Release Valve	1
71	521439	*VALVE, Quick Release (B.W. #228691)	1
72	38F-9	ADAPTER, Q.R.V. to Hose	1
73	569719	HOSE, Q.R.V. to Air Chamber	1
74	25F-2	ELBOW, Hose to Air Chamber	1
75	———	AIR CHAMBER — See Index	1
76	1542832	ELBOW, Hose to Reservoir	1
77	521441	HOSE, Compressor Tube to Reservoir	1
78	1545191	HOSE, Governor Tube to Reservoir	1
79	1542820	HOSE, Reservoir to Brake Valves	1
80	1542832	ELBOW, Hose to Reservoir	1
81	1548631	TUBE, Hose to Governor	1
82	1548632	TUBE, Hose to Compressor	1
83	38F-10	ADAPTER, Tube to Compressor	1
84	———	COMPRESSOR, Furnished with Engine	—
85	42F-3	ELBOW, Tube to Governor	1
86	———	GOVERNOR, Furnished with Engine	—

†Not Illustrated
*NOTE: Your local authorized Bendix-Westinghouse Distributor is equipped to service components of these parts.

WHEN ORDERING PARTS, ALWAYS STATE MODEL AND SERIAL NO. OF MACHINE

https://truckmanualshub.com/

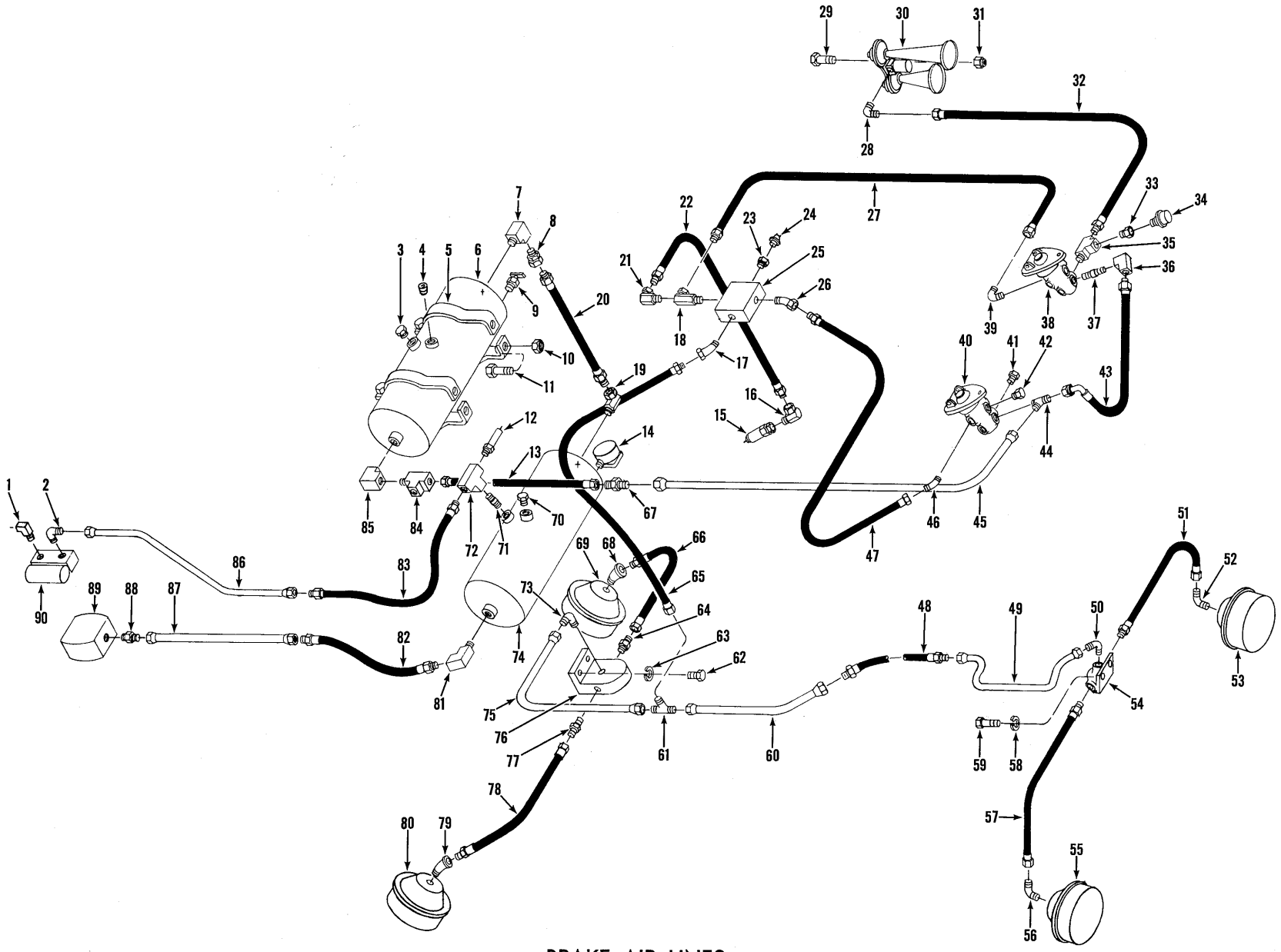

BRAKE AIR LINES
For Serial: 425A317, 326, 331, 337 thru 999

TS-11481

https://truckmanualshub.com/

BRAKE AIR LINES

For Serial: 425A317, 326, 331, 337 thru 999

Item No.	Part No.	Description	No. Req'd.
1	62F-1	ELBOW, Exhaust	1
2	42F-3	ELBOW, Tube to Governor	1
3	40K-06	PLUG, Air Reservoir	1
4	16F-06	PLUG, Air Reservoir	1
5	941813	*BRACKET, Reservoir Mounting (B.W. #221399)	4
6	539164	*RESERVOIR, Air (B.W. #221399)	1
7	1542832	ELBOW, Check Valve to Reservoir	1
8	593370	*VALVE, Check (B.W. #228194)	1
9	72F-2	DRAIN COCK, Reservoir	1
10	18D-06	NUT, Reservoir Mounting	8
11	24C-616	BOLT, Reservoir Mounting	8
12	507815	*VALVE, Safety (B.W. #205105)	1
13	1542820	HOSE, Reservoir to Brake Valve	1
14	1505580	*VALVE, Automatic Drain (B.W. #281923)	1
15	———	VALVE, Transmission Declutch — See Index	1
16	31F-1	ADAPTER, Hose to Declutch Valve	1
17	33F-4	ADAPTER, Hose to Double Check Valve	1
18	356609	ADAPTER, Hose to Double Check Valve	1
19	710053	ELBOW, Hose to Reservoir	1
20	1542821	HOSE, Reservoir to Reservoir	1
21	31F-1	ADAPTER, Hose to Double Check Valve	1
22	540915	HOSE, Double Check Valve to Declutch Valve	1
23	19F-4	BUSHING, Reducing	1
24	636260	SWITCH, Pressure	1
25	1532592	*VALVE, Double Check (B.W. #228194)	1
25A	24C-644	†BOLT, Valve Mounting	1
25B	4E-06	†LKWSHR, Valve Mounting	1
26	33F-4	ADAPTER, Hose to Double Check Valve	1
27	1545549	HOSE, Brake Valve to Double Check Valve	1
28	42F-3	ELBOW, Hose to Air Horn	1
29	24C-416	BOLT, Horn Mounting	2
30	547631	HORN (Inc. 30A)	1
30A	947160	†SOLENOID, Horn	1
31	18D-04	NUT, Horn Mounting	2
32	1543947	HOSE, Brake Valve to Horn	1
33	19F-1	BUSHING, Reducing	1
34	1534135	SENDER, Air Pressure	1
35	30F-1	TEE, Sender & Horn to Brake Valve	1
36	27F-3	ELBOW, Hose to Brake Valve	1
37	5K-420	NIPPLE, Elbow to Brake Valve	1
38	———	VALVE, Air Brake — See Index	1
39	42F-9	ELBOW, Hose to Brake Valve	1
40	———	VALVE, Air Brake — See Index	1
41	40K-04	PLUG, Brake Valve	3
42	40K-08	PLUG, Brake Valve	8
43	1545548	HOSE, Brake Valve to Brake Valve	1
44	46F-9	TEE, Hose to Brake Valve	1
45	1542780	TUBE, Reservoir to Brake Valve	1
46	84F-7	ELBOW, Hose to Brake Valve	1
47	1542820	HOSE, Brake Valve to Double Check Valve	1
48	1538454	HOSE, Center Pivot	1
49	1548634	TUBE, Hose to Q.R.V.	1
50	42F-9	ELBOW, Tube to Q.R.V.	1
51	570145	HOSE, Q.R.V. to Air Chamber	1
52	42F-6	ELBOW, Hose to Air Chamber	1
53	———	AIR CHAMBER — See Index	1
54	521439	*VALVE, Quick Release (B.W. #228691)	1
55	———	AIR CHAMBER — See Index	1
56	42F-6	ELBOW, Hose to Air Chamber	1
57	570145	HOSE, Q.R.V. to Air Chamber	1
58	4E-05	LKWSHR, Q.R.V. Mounting	2
59	24C-510	BOLT, Q.R.V. Mounting	2
60	1538740	TUBE, Pivot Hose to Tube	1
61	44F-8	TEE, Hose to Tubes	1
62	24C-510	BOLT, Q.R.V. Mounting	2
63	4E-05	LKWSHR, Q.R.V. Mounting	2
64	38F-9	CONNECTOR, Hose to Q.R.V.	1
65	1542820	HOSE, Double Check Valve to Tee	1
66	568609	HOSE, Q.R.V. to Air Chamber	1
67	40F-8	CONNECTOR, Hose to Tube	1
68	25F-2	ELBOW, Hose to Air Chamber	1
69	———	AIR CHAMBER — See Index	1
70	40K-06	PLUG, Air Reservoir	1
71	5K-308	NIPPLE, Tee to Reservoir	1
72	20F-19	TEE, Hose & Safety Valve to Reservoir	1
73	42F-9	ELBOW, Tube to Q.R.V.	1
74	539164	*RESERVOIR, Air (B.W. #225224)	1
75	1542776	TUBE, Tee to Q.R.V.	1
76	521439	*VALVE, Quick Release (B.W. #228691)	1
77	38F-9	CONNECTOR, Hose to Q.R.V.	1
78	568609	HOSE, Q.R.V. to Air Chamber	1
79	25F-2	ELBOW, Hose to Air Chamber	1
80	———	AIR CHAMBER — See Index	1
81	1542832	ELBOW, Hose to Reservoir	1
82	521441	HOSE, Compressor to Reservoir	1
83	1545191	HOSE, Governor to Reservoir	1
84	30F-3	TEE, Hose to Reservoir	1
85	1542832	ELBOW, Tee to Reservoir	1
86	1548631	TUBE, Governor to Reservoir	1
87	1548632	TUBE, Compressor to Reservoir	1
88	38F-10	CONNECTOR, Tube to Compressor	1
89	———	COMPRESSOR, Furnished with Engine	—
90	———	GOVERNOR, Furnished with Engine	—

†Not Illustrated

*NOTE: Your local authorized Bendix-Westinghouse Distributor is equipped to service components of these parts.

WHEN ORDERING PARTS, ALWAYS STATE MODEL AND SERIAL NO. OF MACHINE

https://truckmanualshub.com/

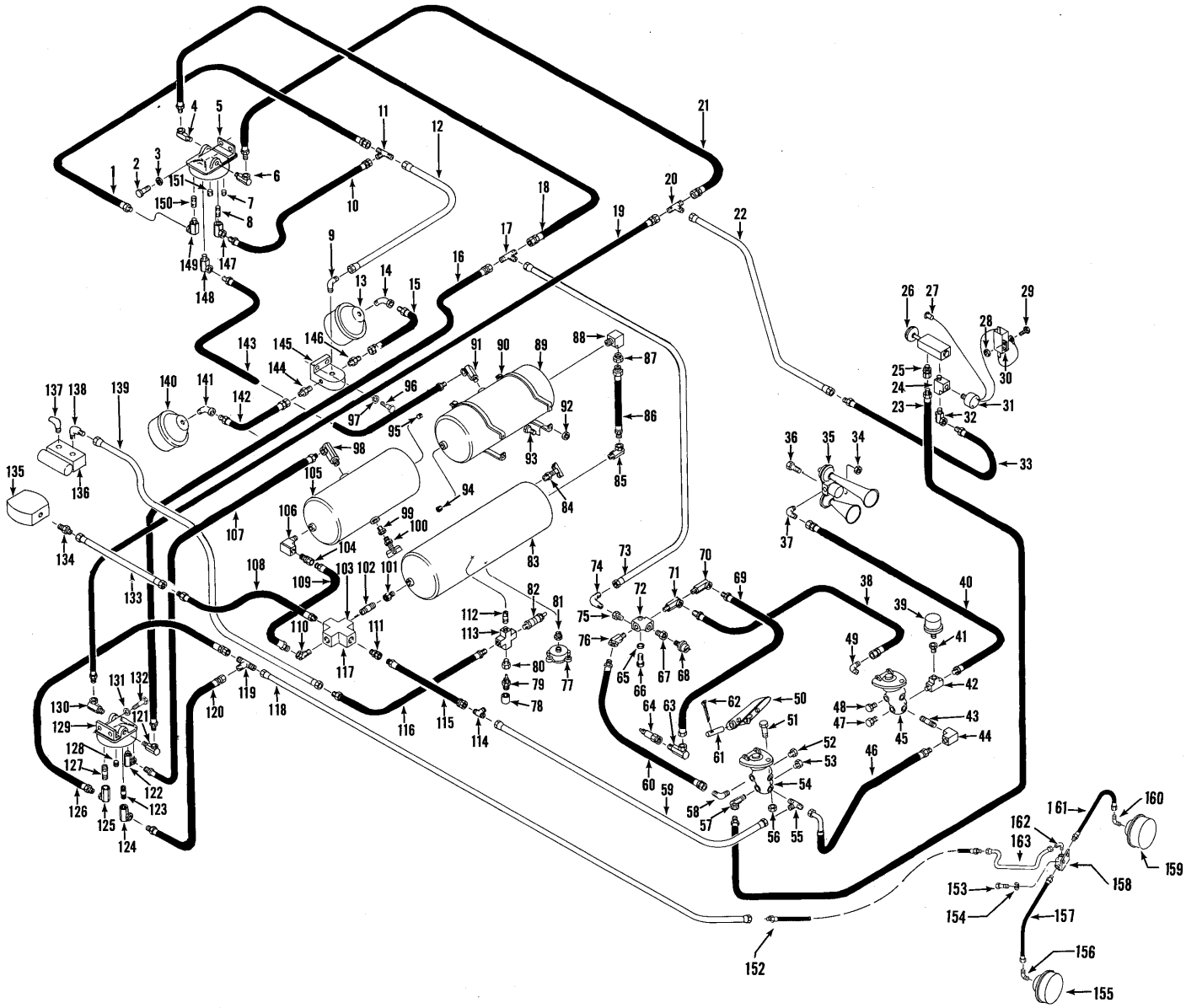

BRAKE AIR LINES
For Serial: 425B101 & After

TS-11572

https://truckmanualshub.com/

BRAKE AIR LINES

For Serial: 425B101 & After

Item No.	Part No.	Description	No. Req'd.
1	573472	HOSE, Emergency Relay to Axles	1
2	24C-616	BOLT, Relay Mounting	2
3	4E-06	LKWSHR, Relay Mounting	2
4	31F-2	ELBOW, Relay to Hose	1
5	1545789	RELAY, Emergency	1
6	31F-2	ELBOW, Relay to Hose	1
7	16F-04	PLUG, Pipe	1
8	5K-210	NIPPLE, Relay to Elbow	1
9	42F-9	ELBOW, Valve to Tube	1
10	1514424	HOSE, Relay to Axles	1
11	44F-8	TEE, Hoses to Tube	1
12	1514430	TUBE, Hose to Valve	1
13	———	CHAMBER, Air Brake — See Index	—
14	25F-2	ELBOW, Chamber to Hose	1
15	568609	HOSE, Valve to Chambers	1
16	1514473	HOSE, Relay to Tee	1
17	10K-3	TEE, Hoses to Tube	1
18	1514473	HOSE, Relay to Tee	1
19	1514473	HOSE, Relay to Tee	1
20	10K-3	TEE, Hoses to Tube	1
21	1514473	HOSE, Relay to Tee	1
22	1514428	TUBE, Tee to Valve	1
23	1514653	HOSE, Valve to Valve	1
24	1549038	TEE, Valve to Sender	1
25	36F-1	ADAPTER, Valve to Hose	1
26	1545790	VALVE, Emergency Brake	1
27	1548542	LIGHT, Low Pressure Warning	1
28	18D-04	NUT, Warning Buzzer Mounting	2
29	24C-412	BOLT, Warning Buzzer Mounting	2
30	1548952	BUZZER, Low Pressure Warning	1
31	1534135	SWITCH, Pressure	1
32	33F-1	ELBOW, Tee to Hose	1
33	1512797	HOSE, Valve to Tube	1
34	18D-04	NUT, Horn Mounting	2
35	547631	HORN (Inc. 35A)	1
35A	947160	†SOLENOID, Horn	1
36	24C-416	BOLT, Horn Mounting	2
37	42F-3	ELBOW, Horn to Hose	1
38	1545549	HOSE, Valve to Valve	1
39	1534135	SENDER, Air Pressure	1
40	1543947	HOSE, Valve to Horn	1
41	19F-1	ADAPTER, Sender to Tee	1
42	30F-1	TEE, Valve to Hose	1
43	5K-420	NIPPLE, Valve to Elbow	1
44	27F-3	ELBOW, Valve to Hose	1
45	———	VALVE, Brake Foot — See Index	—
46	1545548	HOSE, Valve to Valve	1
47	40K-04	PLUG, Pipe	1
48	40K-08	PLUG, Pipe	4
49	42F-9	ELBOW, Valve to Hose	1
50	———	PEDAL, Brake — See Index	—
51	24C-520	BOLT, Valve Mounting	6
52	40K-08	PLUG, Pipe	4
53	40K-04	PLUG, Pipe	1
54	———	VALVE, Brake Foot — See Index	—
55	46F-9	TEE, Valve to Tube	1
56	18D-05	NUT, Valve Mounting	6
57	33F-2	ELBOW, Valve to Hose	1
58	84F-7	ELBOW, Valve to Hose	1
59	1542780	TUBE, Reservoir to Valve	1
60	1542820	HOSE, Valve to Check Valve	1
61	———	PIN, Pedal to Valve — See Index	—
62	———	COTTER, Pin — See Index	—
63	31F-1	ADAPTER, Hose to Valve	1
64	217927	VALVE, Transmission Declutch	1
65	4E-06	LKWSHR, Check Valve Mounting	1
66	24C-644	BOLT, Check Valve Mounting	1
67	19F-4	BUSHING, Check Valve to Switch	1
68	636260	SWITCH, Pressure	1
69	540915	HOSE, Valve to Check Valve	1
70	31F-1	ADAPTER, Hose to Valve	1
71	356609	ADAPTER, Hose to Check Valve	1
72	1532592	VALVE, Check	1
73	1514431	TUBE, Check Valve to Tee	1
74	42F-3	ELBOW, Tube to Valve	1
75	19F-4	BUSHING, Elbow to Valve	1
76	33F-4	ADAPTER, Valve to Hose	1

†Not Illustrated

WHEN ORDERING PARTS, ALWAYS STATE MODEL AND SERIAL NO. OF MACHINE

https://truckmanualshub.com/

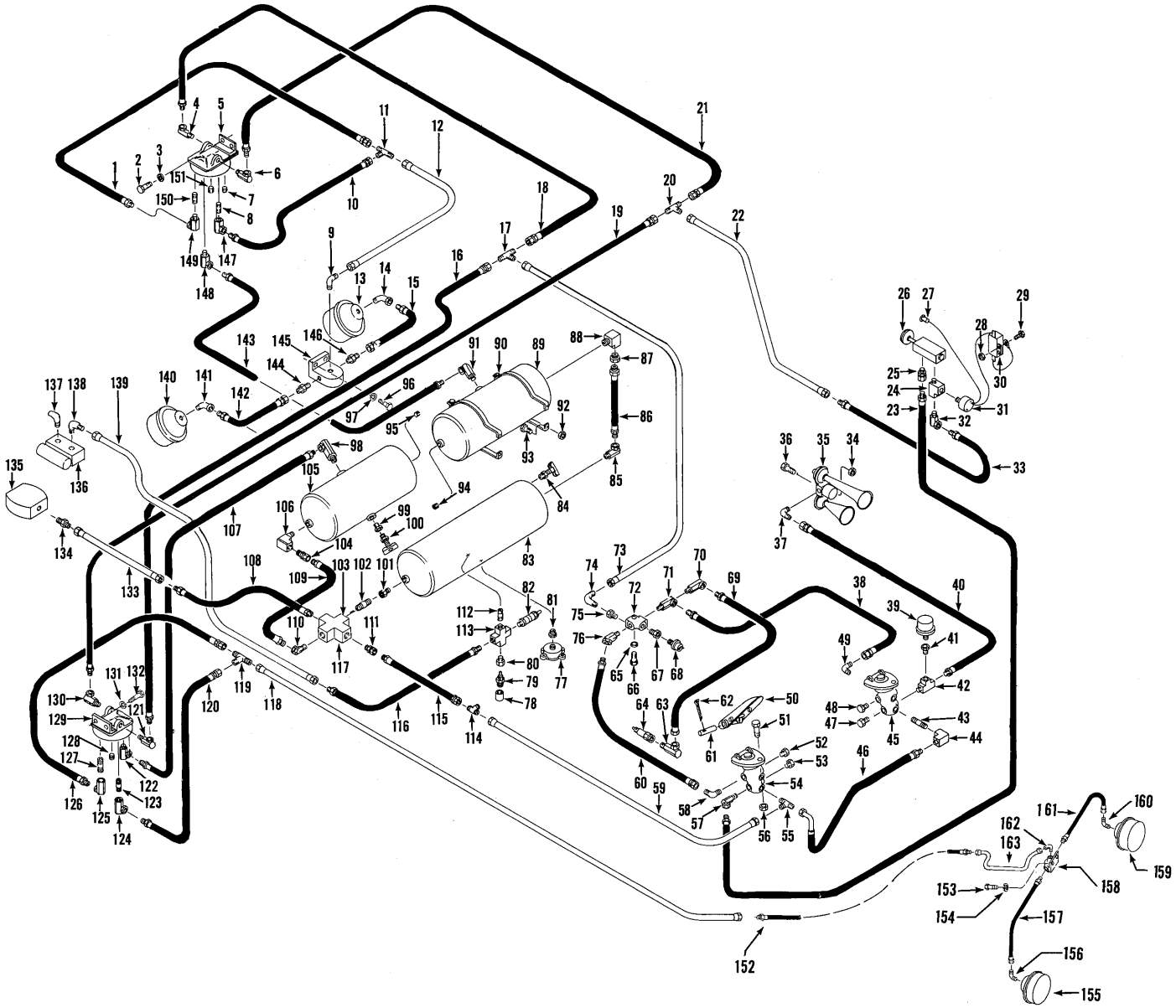

BRAKE AIR LINES
For Serial: 425B101 & After

TS-11572

https://truckmanualshub.com/

BRAKE AIR LINES (Continued)

For Serial: 425B101 & After

Item No.	Part No.	Description	No. Req'd.
77	1505580	VALVE, Drain	1
78	573750	CAP, Valve	1
79	573618	STEM AND CORE ASSY	1
80	19F-1	BUSHING, Cross to Core Assy	1
81	19F-3	BUSHING, Drain to Reservoir	1
82	507815	VALVE, Safety	1
83	539164	*RESERVOIR, Air (B.W. #225224)	1
84	72F-2	DRAIN COCK	1
85	31F-4	ADAPTER, Reservoir to Hose	1
86	1542821	HOSE, Reservoir to Reservoir	1
87	593370	VALVE, Check	1
88	29F-3	ELBOW, Reservoir to Hose	1
89	513842	*RESERVOIR, Air (B.W. #227901)	1
90	941813	BRACKET, Air Reservoir Mounting	6
91	31F-4	ADAPTER, Reservoir to Hose	1
92	18D-06	NUT, Reservoir Mounting	12
93	24C-616	BOLT, Reservoir Mounting	12
94	16F-08	PLUG, Pipe	1
95	16F-08	PLUG, Pipe	1
96	24C-510	BOLT, Valve Mounting	2
97	4E-05	LKWSHR, Valve Mounting	2
98	31F-4	ADAPTER, Reservoir to Hose	1
99	19F-5	BUSHING, Drain to Reservoir	2
100	72F-2	DRAINCOCK	2
101	356617	BUSHING, Cross to Reservoir	1
102	5K-409	NIPPLE, Cross to Reservoir	1
103	29K-308	CROSS, Hoses to Reservoir	1
104	593370	VALVE, Check	1
105	513842	*RESERVOIR, Air (B.W. #227901)	1
106	29F-3	ELBOW, Reservoir to Hose	1
107	1514425	HOSE, Reservoir to Relay	1
108	521441	HOSE, Compressor to Reservoir	1
109	1542821	HOSE, Reservoir to Reservoir	1
110	33F-4	ELBOW, Hose to Cross	1
111	36F-4	ADAPTER, Hose to Cross	1
112	5K-210	NIPPLE, Cross to Reservoir	1
113	29F-204	CROSS, Hose to Reservoir	1
114	1542831	TEE, Hose to Tube	1
115	1542820	HOSE, Reservoir to Valve	1
116	1545191	HOSE, Reservoir to Governor	1
117	29K-308	CROSS, Reservoir to Hoses	1
118	1514429	TUBE, Relay to Axle	1
119	44F-8	TEE, Tube to Hoses	1
120	1514424	HOSE, Relay to Axle	1
121	31F-2	ELBOW, Relay to Hose	1
122	661417	ELBOW, Relay to Hose	1
123	5K-210	NIPPLE, Relay to Elbow	1
124	632710	ELBOW, Relay to Hose	1
125	632710	ELBOW, Relay to Hose	1
126	573472	HOSE, Relay to Axle	1
127	5K-210	NIPPLE, Relay to Elbow	1
128	16F-04	PLUG, Pipe	2
129	1545789	RELAY, Emergency	1
130	31F-2	ELBOW, Relay to Hose	1
131	4E-06	LKWSHR, Relay Mounting	2
132	24C-616	BOLT, Relay Mounting	2
133	1548632	TUBE, Compressor to Reservoir	1
134	38F-10	CONNECTOR, Compressor to Tube	1
135	———	COMPRESSOR, Air — See Engine	—
136	———	GOVERNOR, Compressor — See Engine	—
137	62F-1	ELBOW, Exhaust	1
138	42F-3	ELBOW, Governor to Tube	1
139	1548631	TUBE, Governor to Reservoir	1
140	———	CHAMBER, Air Brake — See Index	—
141	25F-2	ELBOW, Chamber to Hose	1
142	568609	HOSE, Chamber to Valve	1
143	1514425	HOSE, Reservoir to Relay	1
144	38F-9	CONNECTOR, Hose to Valve	1
145	521439	VALVE, Quick Release	1
146	38F-9	CONNECTOR, Hose to Valve	1
147	632710	ELBOW, Relay to Hose	1
148	661417	ELBOW, Relay to Hose	1
149	632710	ELBOW, Relay to Hose	1
150	5K-210	NIPPLE, Relay to Elbow	1
151	16F-04	PLUG, Pipe	1
152	1538454	HOSE, Tube to Tube	1
153	24C-510	BOLT, Valve to Frame	2
154	4E-05	LKWSHR, Valve to Frame	2
155	———	AIR CHAMBER — See Index	—
156	42F-6	ELBOW, Hose to Chamber	1
157	570145	HOSE, Valve to Chamber	1
158	521439	VALVE, Quick Release	1
159	———	AIR CHAMBER — See Index	—
160	42F-6	ELBOW, Hose to Chamber	1
161	570145	HOSE, Valve to Chamber	1
162	42F-9	ELBOW, Valve to Tubing	1
163	1548634	TUBE, Hose to Valve	1

*NOTE: Your local authorized Bendix-Westinghouse Distributor is equipped to service components of these parts.

WHEN ORDERING PARTS, ALWAYS STATE MODEL AND SERIAL NO. OF MACHINE

https://truckmanualshub.com/

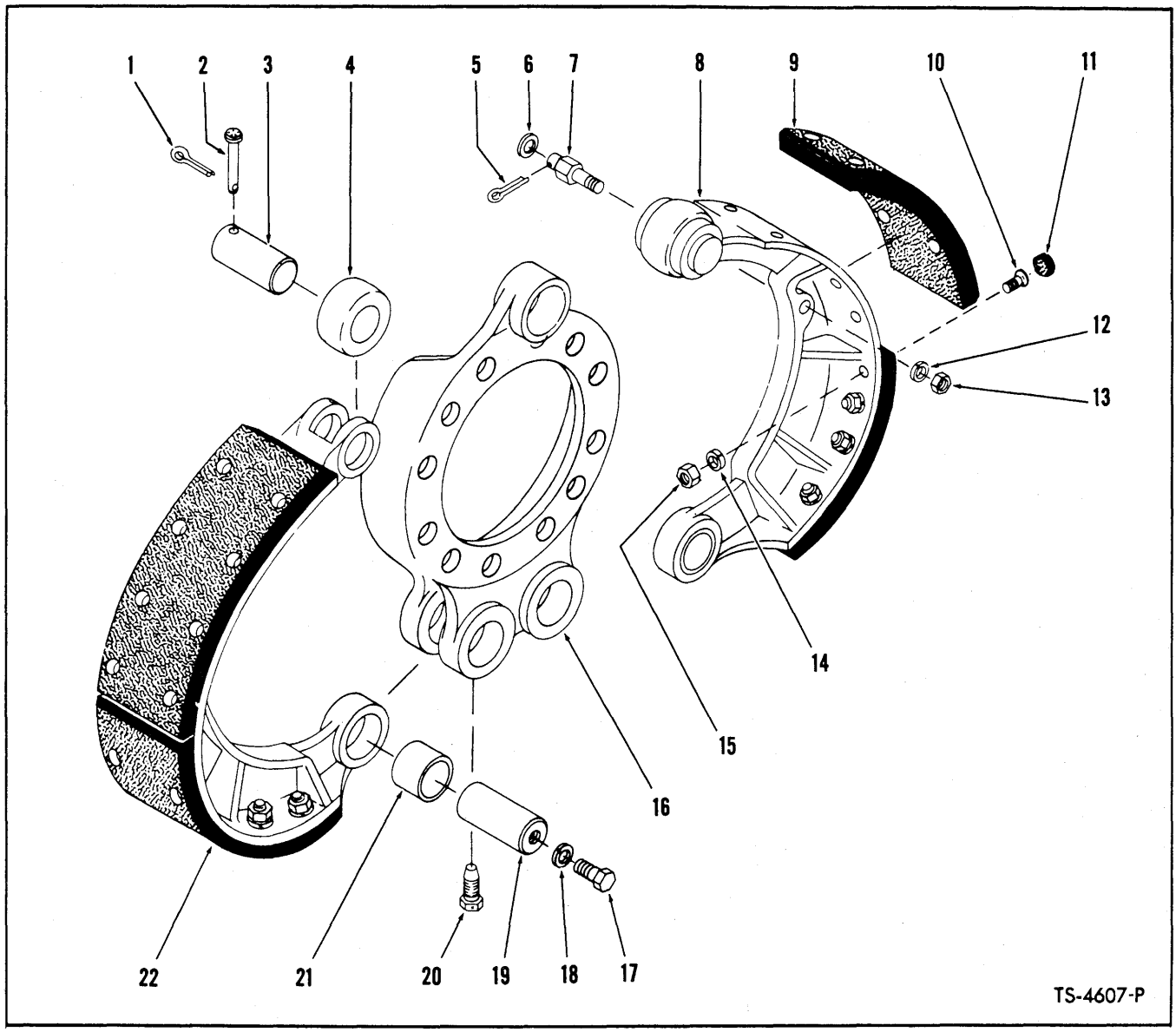

BRAKE ASSEMBLY — FRONT AND REAR

Item No.	Part No.	Description	No. Req'd.
A	122503	BRAKE ASSY, Front and Rear (Inc. 1 thru 4, 7 thru 22)	4
		NOTE: Four Brakes used on machine — Quantities listed below are for one Brake	
1	1F-308	COTTER, Roller Pin Lock Pin	2
2	815971	PIN, Cam Roller Pin Lock	2
3	112211	PIN, Brake Cam Roller	2
4	112210	ROLLER, Brake Cam	2
5	1F-412	COTTER, Spring Anchor Pin	2
6	619027	WASHER, Spring Anchor Pin	2
7	112216	PIN, Spring Anchor	2
8	———	§SHOE, Brake — See 22	2
9		*LINING, Brake Shoe*	
9A	114306	Standard	4
9B	114307	Oversize — ⅛"	4
10	107706	SCREW, Lining to Shoe	32
11	113249	PLUG, Brake Lining	32
12	4E-06	LKWSHR, Spring Anchor Pin	2
13	62D-06	NUT, Spring Anchor Pin	2
14	24E-06	LKWSHR, Lining to Shoe	32
15	~~122504~~	NUT, Lining to Shoe 62D-06	32
16	~~112214~~	SPIDER, Front Brake 122504	1
17	1C-812	BOLT, Puller Hole Plug	2
18	4E-08	LKWSHR, Puller Hole Plug	2
19	112213	PIN, Brake Shoe Anchor	2
20	109597	SCREW, Anchor Pin Set	2
21	112212	BUSHING, Brake Shoe	2
22	114304	SHOE ASSY, Brake (Inc. 1 thru 4, 8 thru 11, 14, 15, 21)	2

§Not Sold Separately

WHEN ORDERING PARTS, ALWAYS STATE MODEL AND SERIAL NO. OF MACHINE

https://truckmanualshub.com/

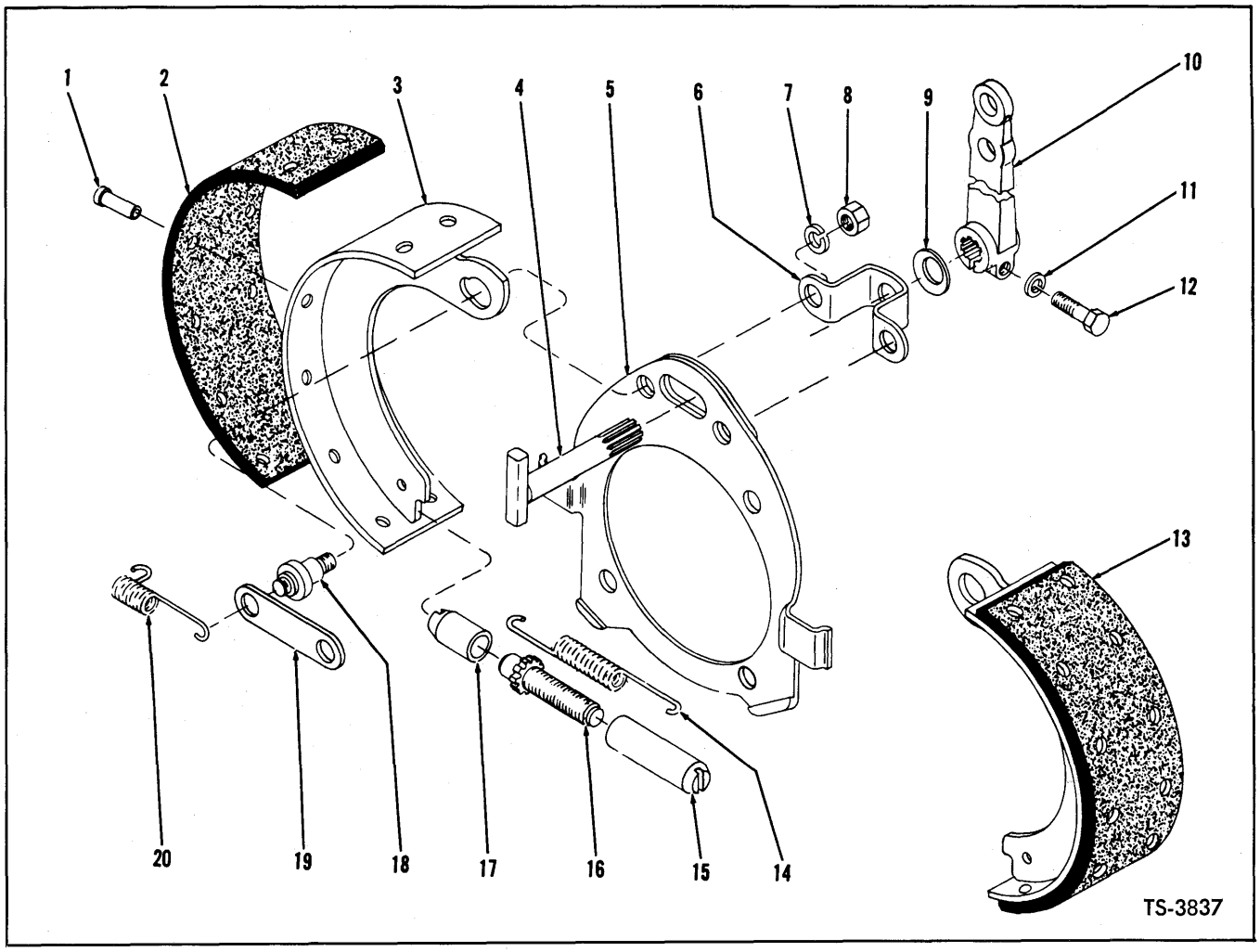

BRAKE ASSEMBLY — PARKING

For Serial: 425A101 thru 999

Item No.	Part No.	Description	No. Req'd.
A	110594	BRAKE ASSY (Inc. 1 thru 20)	1
1	943466	RIVET, Lining to Shoe	24
2	944664	LINING KIT, Brake Shoe (Inc. 1)	1
3	———	§SHOE, Brake — See 13	2
4	944659	CAM SHAFT, Brake	1
5	944656	PLATE, Brake Mounting	1
6	944658	BRACKET, Cam Shaft Support	1
7	4E-12	LKWSHR, Anchor Pin	2
8	62D-12	NUT, Anchor Pin	2
9	944663	WASHER, Shaft to Lever	1
10	943455	LEVER, Brake Control	1
11	4E-06	LKWSHR, Lever to Shaft	1
12	943464	BOLT, Lever to Shaft	1
13	944665	SHOE ASSY, Brake (Inc. 1, 2, 3)	2
14	943458	SPRING, Adjusting Screw	1
15	943463	NUT, Adjusting Screw	1
16	943462	SCREW, Adjusting	1
17	943465	SOCKET, Adjusting Screw	1
18	944657	PIN, Anchor	2
19	944660	BRACE, Anchor Pin	1
20	944661	SPRING, Shoe Return	2

§Not Sold Separately

WHEN ORDERING PARTS, ALWAYS STATE MODEL AND SERIAL NO. OF MACHINE

https://truckmanualshub.com/

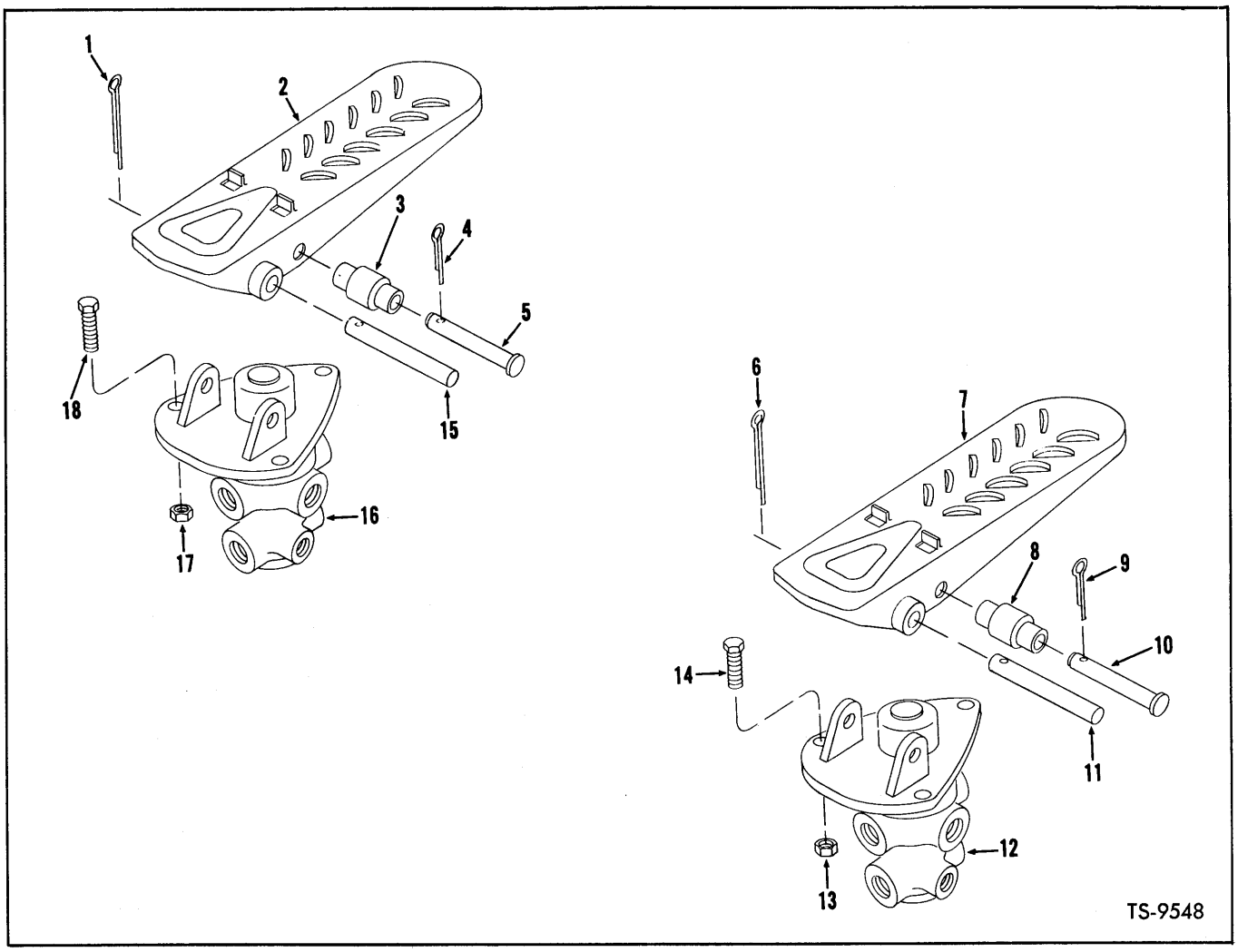

BRAKE CONTROLS

Item No.	Part No.	Description	Req'd.
1	1F-320	COTTER, Pedal to Pin	1
2	513930	PEDAL ASSY, Air Brake	1
3	518259	ROLLER, Pedal	1
4	1F-312	COTTER, Pedal to Pin	1
5	875766	PIN, Pedal to Roller	1
6	1F-320	COTTER, Pedal to Pin	1
7	513930	PEDAL ASSY, Air Brake	1
8	518259	ROLLER, Pedal	1
9	1F-312	COTTER, Pedal to Pin	1
10	875766	PIN, Pedal to Roller	1
11	875767	PIN, Pedal to Valve	1
12	———	VALVE, Air Brake — See Index	1
13	18D-05	NUT, Valve Mounting	3
14	24C-520	BOLT, Valve Mounting	3
15	875767	PIN, Pedal to Valve	1
16	———	VALVE, Air Brake — See Index	1
17	18D-05	NUT, Valve Mounting	3
18	24C-520	BOLT, Valve Mounting	3

WHEN ORDERING PARTS, ALWAYS STATE MODEL AND SERIAL NO. OF MACHINE

https://truckmanualshub.com/

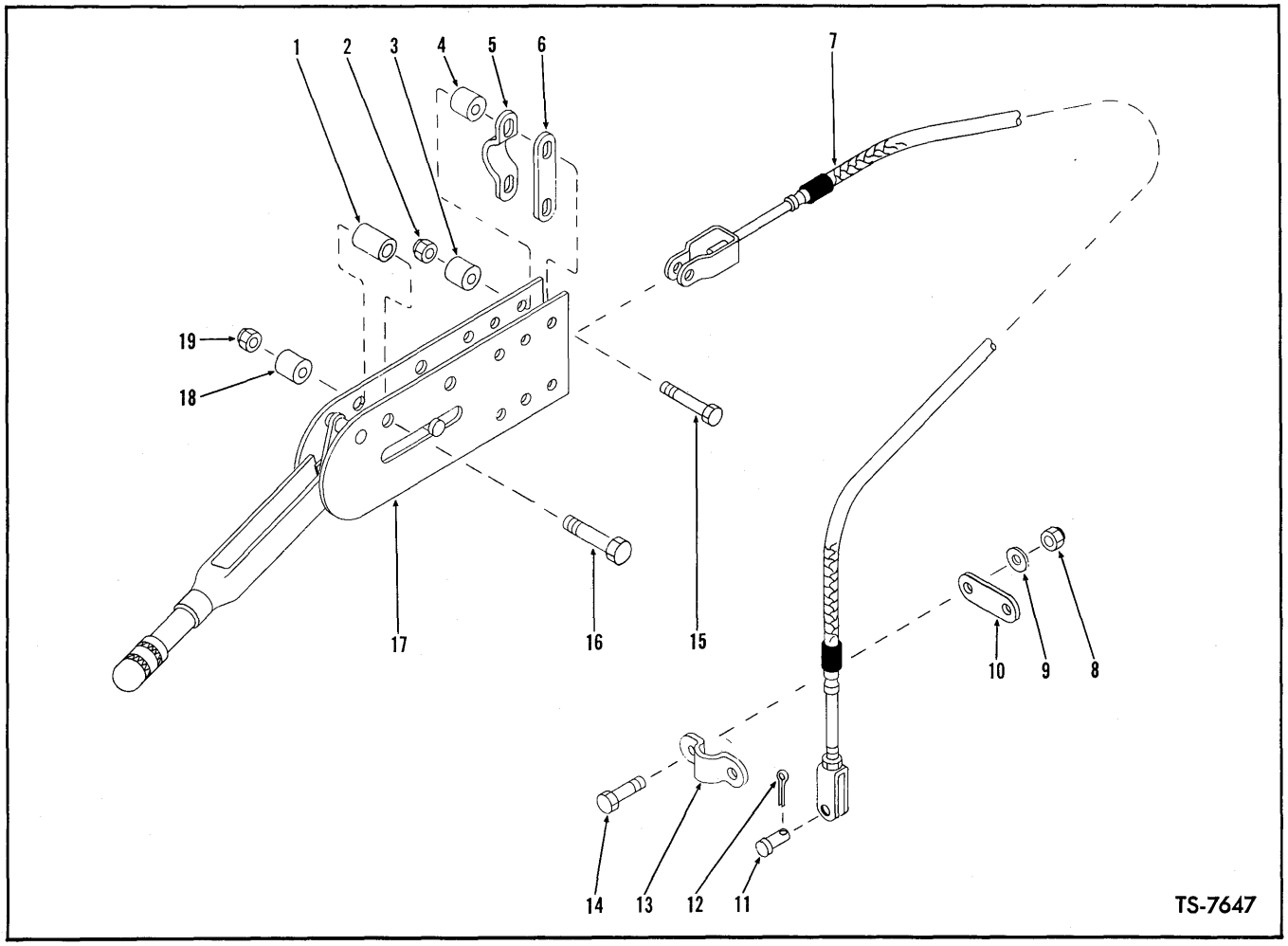

BRAKE CONTROLS — PARKING

For Serial: 425A101 thru 999

Item No.	Part No.	Description	No. Req'd.
1	545005	SPACER, Lever Mounting	2
2	18D-05	NUT, Cable Mounting	2
3	———	OMIT, Not Used on This Application	—
4	545006	SPACER, Cable Mounting	2
5	544512	CLAMP, Cable	1
6	645092	LINK, Cable Clamp	1
7	1532762	CABLE, Parking Brake	1
8	18D-05	NUT, Clamp	2
9	664403	WASHER, Clamp	2
10	645092	LINK, Cable Clamp	1
11	4F-08127	PIN, Cable Clevis	1
12	1F-414	COTTER, Clevis Pin	1
13	544512	CLAMP, Cable	1
14	24C-520	BOLT, Cable Clamp	2
15	24C-528	BOLT, Cable Clamp	2
16	24C-644	BOLT, Lever Mounting	2
17	———	PARKING BRAKE LEVER ASSY — See Index	—
18	545006	SPACER, Lever Mounting	2
19	18D-06	NUT, Lever Mounting	2

WHEN ORDERING PARTS, ALWAYS STATE MODEL AND SERIAL NO. OF MACHINE

https://truckmanualshub.com/

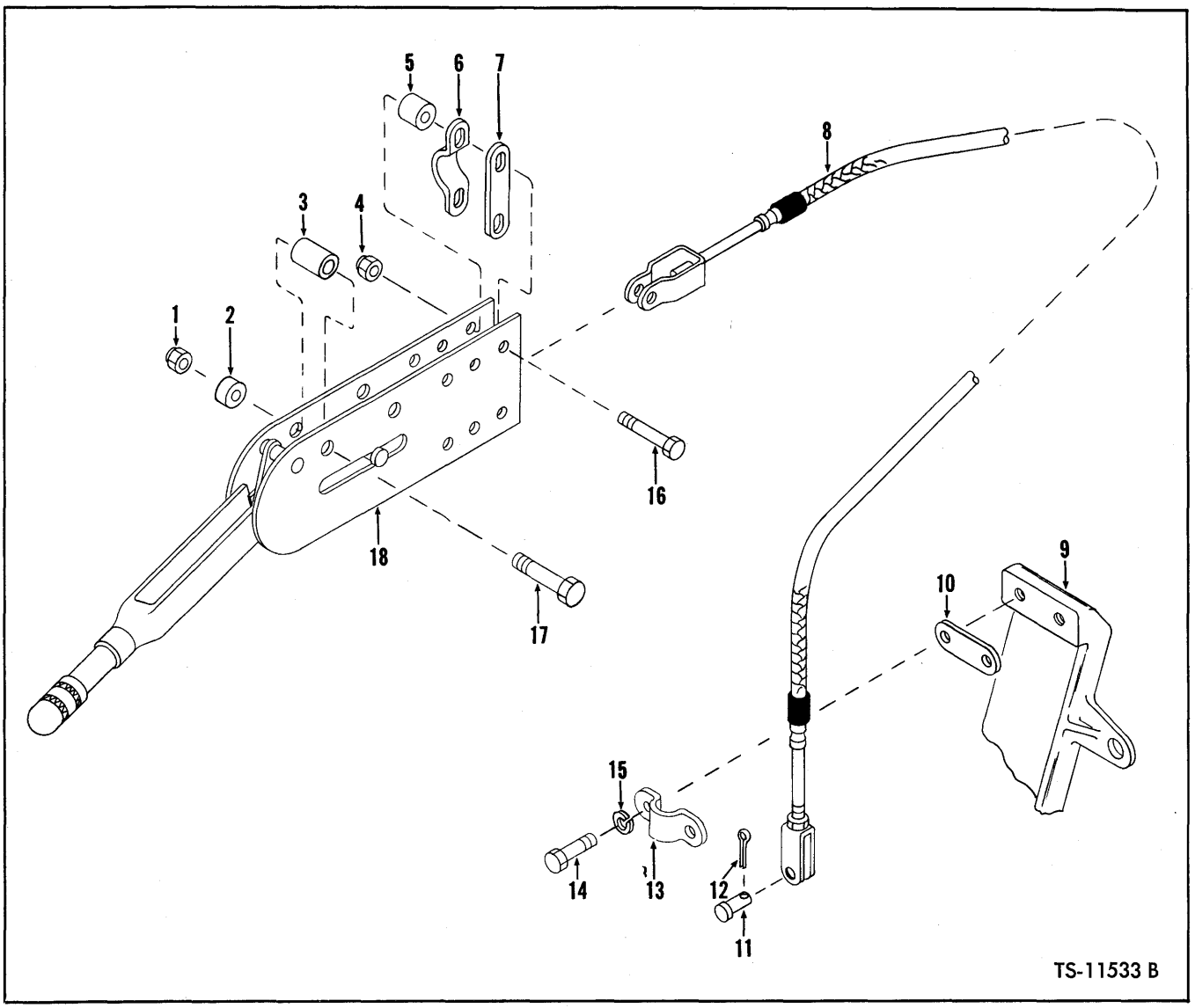

BRAKE CONTROLS — PARKING

For Serial: 425B101 & After

Item No.	Part No.	Description	No. Req'd.
1	18D-06	NUT, Lever Mounting	2
2	545006	SPACER, Lever Mounting	2
3	1513370	SPACER, Lever Mounting	2
4	18D-05	NUT, Cable to Lever	2
5	675872	SPACER, Cable to Lever	2
6	544512	CLAMP, Cable	1
7	645092	LINK, Cable Clamp	1
8	1518446	CABLE, Parking Brake	1
9	124111	BRACKET, Cable Mounting	1
10	645092	LINK, Cable Clamp	1
11	4F-06106	PIN, Cable Clevis	1
12	1F-312	COTTER, Clevis Pin	1
13	544512	CLAMP, Cable	1
14	23C-616	BOLT, Cable to Bracket	2
15	4E-06	LKWSHR, Cable to Bracket	2
16	24C-528	BOLT, Cable to Lever	2
17	24C-640	BOLT, Lever Mounting	2
18	———	BRAKE LEVER ASSY — See Index	1

WHEN ORDERING PARTS, ALWAYS STATE MODEL AND SERIAL NO. OF MACHINE

https://truckmanualshub.com/

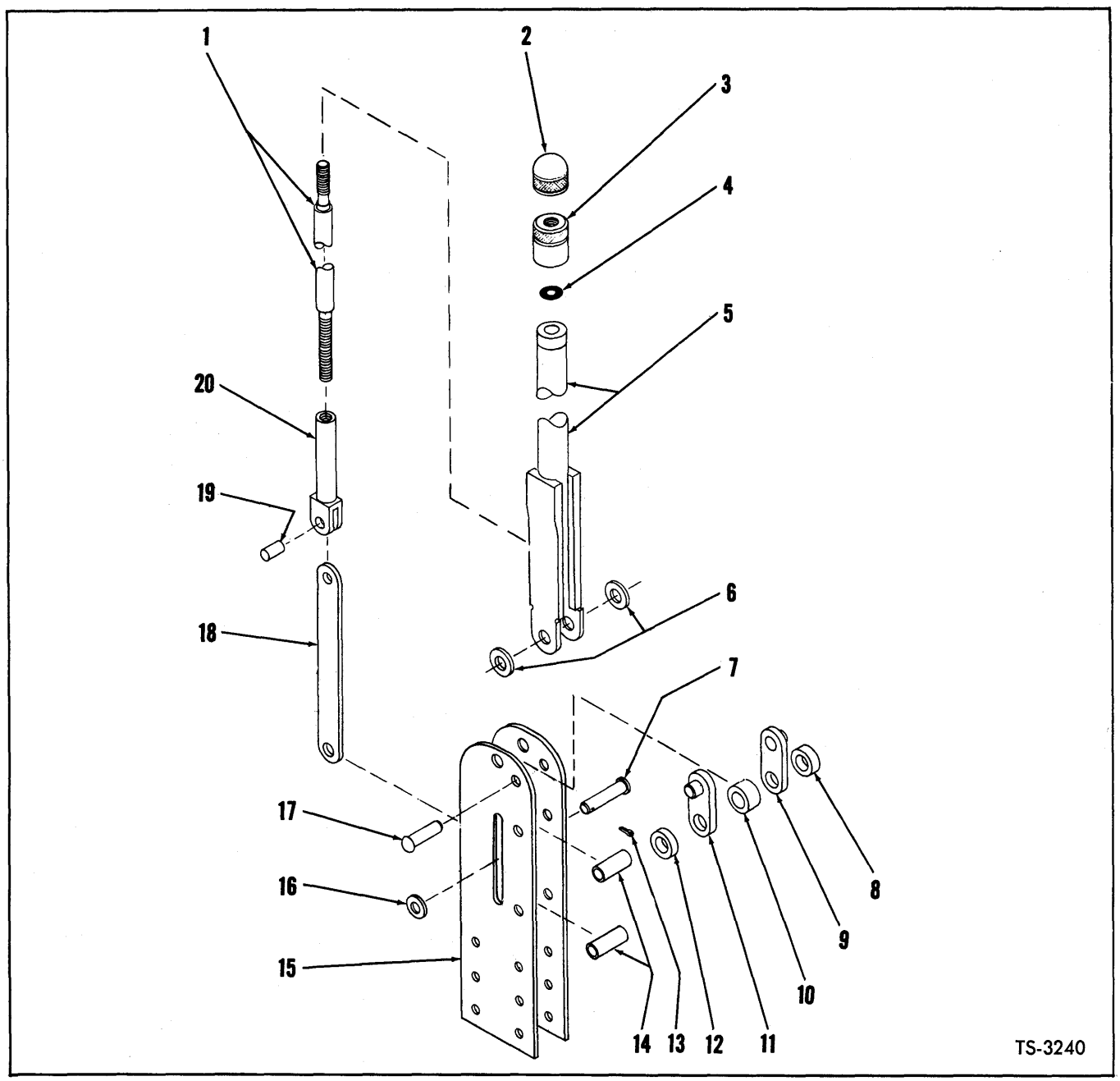

BRAKE LEVER ASSEMBLY — PARKING

For Serial: 425A101 thru 999

Item No.	Part No.	Description	No. Req'd.
A	544998	LEVER ASSY (Inc. 1 thru 20)	1
1	866349	SCREW, Adjusting	1
2	941227	CAP, Adjusting Knob	1
3	941226	BASE, Adjusting Knob	1
4	———	OMIT	—
5	866348	BODY, Brake Lever	1
6	619024	WASHER, Body to Bracket	2
7	862738	PIN, Adjusting Screw Link Pivot	1
8	862656	SPACER, Pivot Bracket	1
9	862653	BRACKET, Pivot	1
10	862655	SPACER, Pivot Bracket	1
11	862653	BRACKET, Pivot	1
12	862656	SPACER, Pivot Bracket	1
13	1F-312	COTTER, Link Pivot Pin	1
14	645095	SPACER, Mounting Bracket	2
15	944969	BRACKET,. Lever Mounting	2
16	619019	WASHER, Link Pivot Pin	1
17	944054	RIVET, Pivot Bracket	1
18	862652	LINK, Adjusting Screw	1
19	941238	PIN, Link to Tube	1
20	944968	TUBE, Adjusting Screw	1

WHEN ORDERING PARTS, ALWAYS STATE MODEL AND SERIAL NO. OF MACHINE

https://truckmanualshub.com/

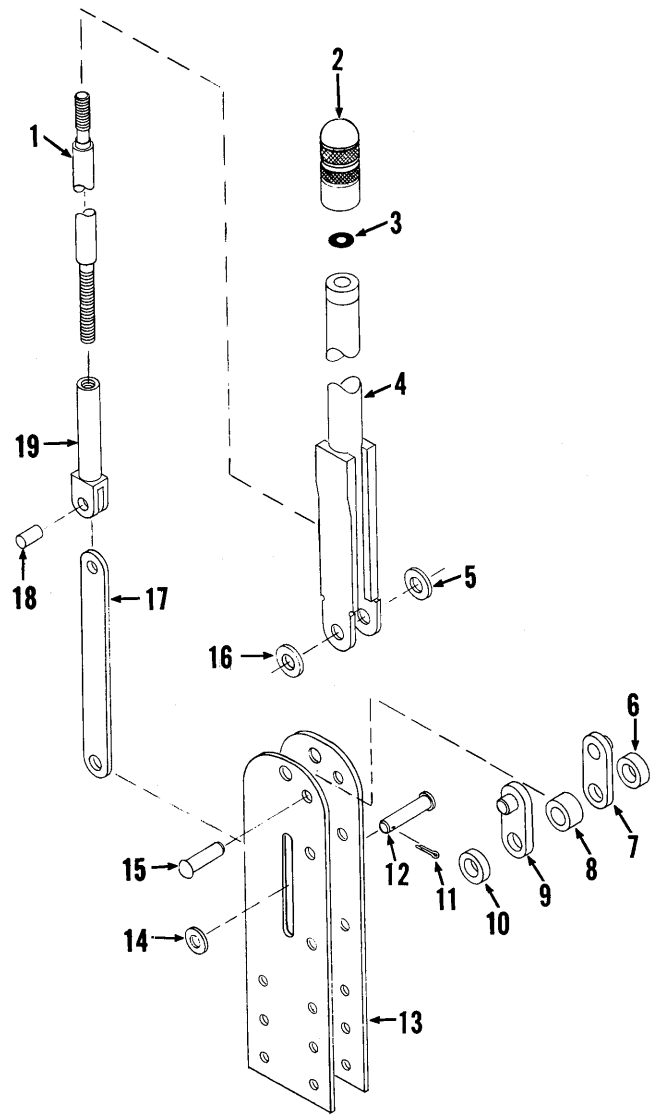

TS-11445

BRAKE LEVER ASSEMBLY — PARKING

For Serial: 425B101 & After

Item No.	Part No.	Description	No. Req'd.
A	1511473	LEVER ASSY (Inc. 1 thru 19)	1
1	949460	SCREW, Adjusting	1
2	949462	KNOB, Adjusting	1
3	25K-30014	O-RING	1
4	949461	LEVER BODY ASSY	1
5	949470	WASHER, Body to Bracket	1
6	949466	SPACER, Body Mounting	1
7	862653	BRACKET, Pivot	1
8	949467	SPACER, Body Mounting	1
9	862653	BRACKET, Pivot	1
10	949466	SPACER, Body Mounting	1
11	1F-312	COTTER, Link Pivot Pin	1
12	949468	PIN, Adjusting Screw Link Pivot	1
13	949469	BRACKET, Mounting	1
14	551480	WASHER, Link Pivot Pin	1
15	941233	RIVET, Body to Bracket	1
16	949470	WASHER, Body to Bracket	1
17	949465	LINK, Adjusting Screw	1
18	949464	PIN, Link to Tube	1
19	949463	TUBE, Adjusting Screw	1

WHEN ORDERING PARTS, ALWAYS STATE MODEL AND SERIAL NO. OF MACHINE

https://truckmanualshub.com/

"C" GROUP

CONTENTS

Clips — Wiring, Pipe & Hose ..... C 2

Cockpit & Horn Switch ..... C 3

Converter Group:

- Converter Assembly — Torque ..... C 5
- Converter Downstream Pressure Regulating Valve ..... C 8

Cylinder Group:

- Cylinder Assembly — Boom ..... C 9
- Cylinder Assembly — Bucket ..... C 12
- Cylinder Assembly — Steering ..... C 14

https://truckmanualshub.com/

CLIPS — WIRING, PIPE & HOSE

The following types of clips are used in connection with the various wiring, fuel, air and hydraulic piping systems employed in this unit. When replacing clips identification can be made by checking type and physical dimensions listed to obtain part number.

INSULATED CLIP

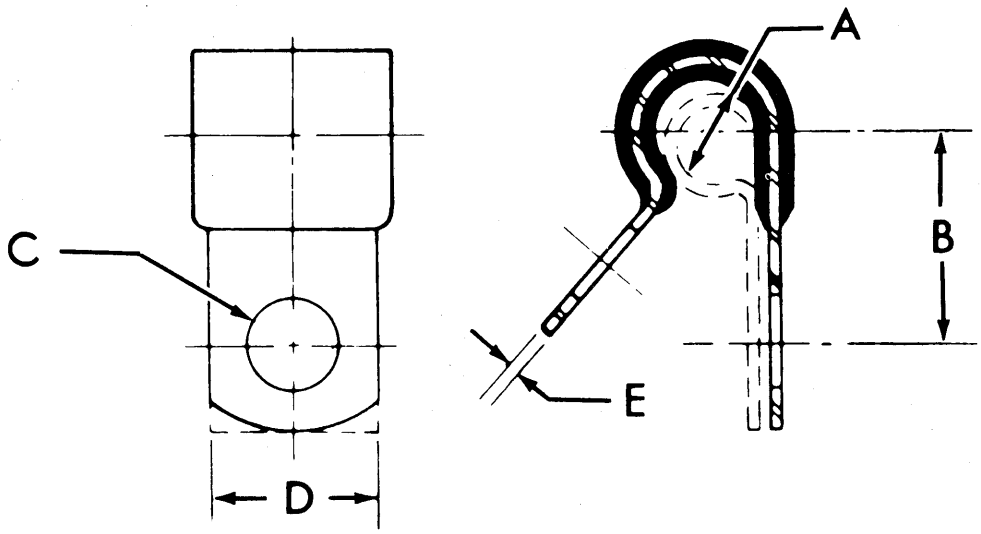

TS-5008

Item No.	PART NUMBER	A	B	C	D	E
1	30H-14	1/4	17/32	9/32	1/2	.032
2	30H-16	1/4	21/32	13/32	3/4	.032
3	30H-23	3/8	23/32	13/32	3/4	.032
4	30H-31	1/2	25/32	13/32	3/4	.032
5	30H-32	1/2	27/32	15/32	7/8	.050
6	30H-35	9/16	13/16	13/32	3/4	.050
7	30H-38	5/8	27/32	13/32	3/4	.050
8	30H-50	15/16	1	13/32	3/4	.050

BRACKETS

9 1545184 † BRACKET, Clip to Engine 1

†Not Illustrated

WHEN ORDERING PARTS, ALWAYS STATE MODEL AND SERIAL NO. OF MACHINE

https://truckmanualshub.com/

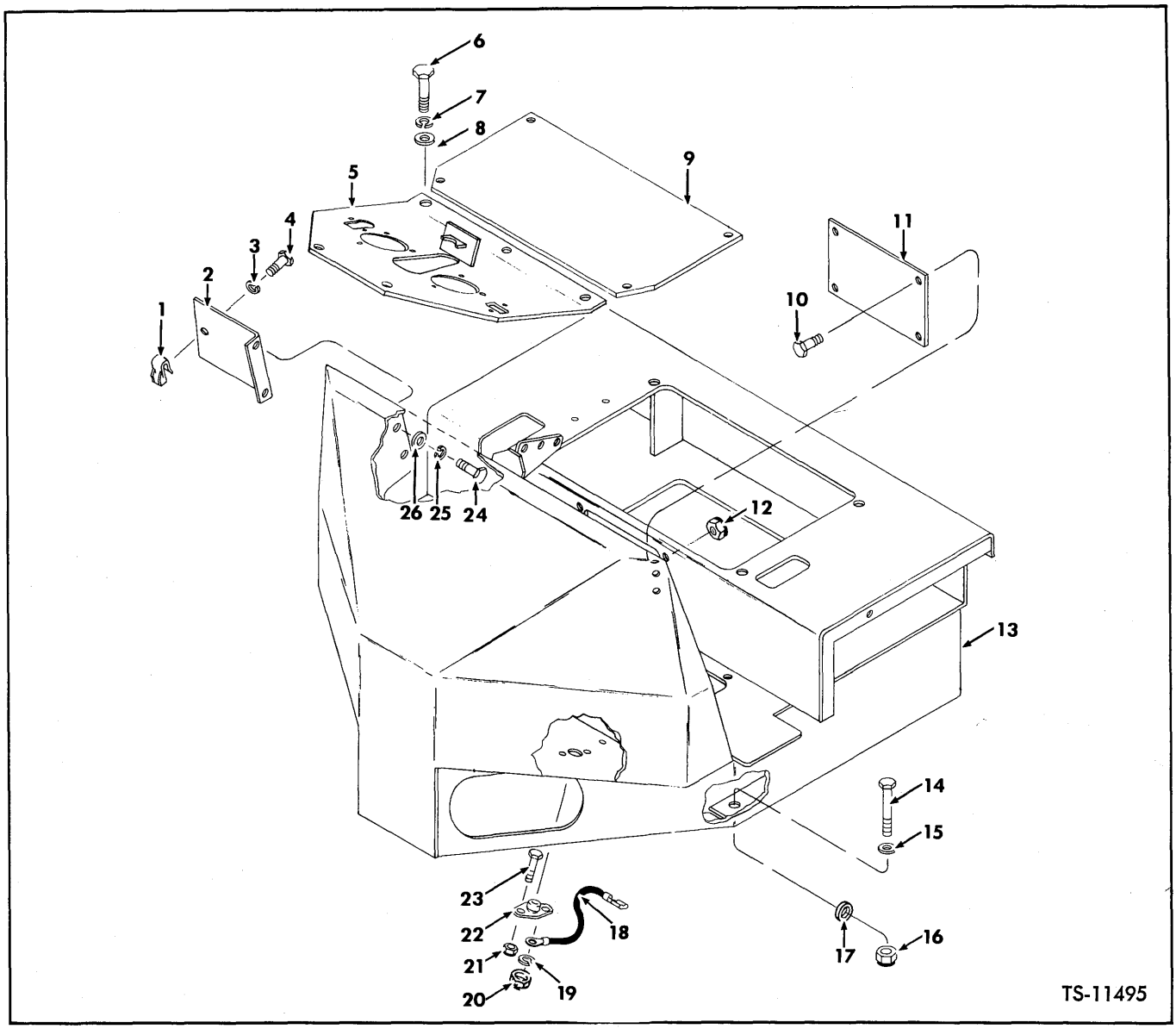

COCKPIT & HORN SWITCH

Item No.	Part No.	Description	No. Req'd.
1	572729	CAGED NUT, Panel to Cockpit	1
2	574026	PANEL, R.H.	1
3	4E-06	LKWSHR, Panel to Cockpit	1
4	23C-616	BOLT, Panel to Cockpit	1
5	1545931	FLOORBOARD ASSY	1
6	23C-820	BOLT, Floorboard to Cockpit	9
7	4E-08	LKWSHR, Floorboard to Cockpit	9
8	619029	WASHER, Floorboard to Cockpit	9
9	1526152	COVER, Floorboard to Cockpit	1
10	23C-612	BOLT, Heater Hole Cover	4
11	1508950	COVER, Heater Hole	1
12	17D-3	LOCKNUT, Heater Hole Cover	4
13		COCKPIT	1
13A	1542667	For Serial Group "A"	1
13B	1514404	For Serial Group "B"	1
14	24C-1248	BOLT, Cockpit Mounting	4
15	71D-12	BASE, Cockpit Mounting	4
16	70D-12	NUT, Cockpit Mounting	4
17	25E-27	WASHER, Cockpit Mounting	4
18	1545471	WIRE, Horn to Switch	1
19	4E-06	LKWSHR, Wire to Switch	1
20	15D-06	NUT, Wire to Switch	1
21	18D-04	NUT, Switch to Cockpit	2
22	778570	FOOT SWITCH, Horn	1
23	23C-416	BOLT, Switch to Cockpit	2
24	23C-616	BOLT, Panel to Cockpit	2
25	4E-06	LKWSHR, Panel to Cockpit	2
26	656672	WASHER, Panel to Cockpit	2

Serial Group "A": 425A101 thru 999.
For Serial Group "B": 425B101 and After.

WHEN ORDERING PARTS, ALWAYS STATE MODEL AND SERIAL NO. OF MACHINE

https://truckmanualshub.com/

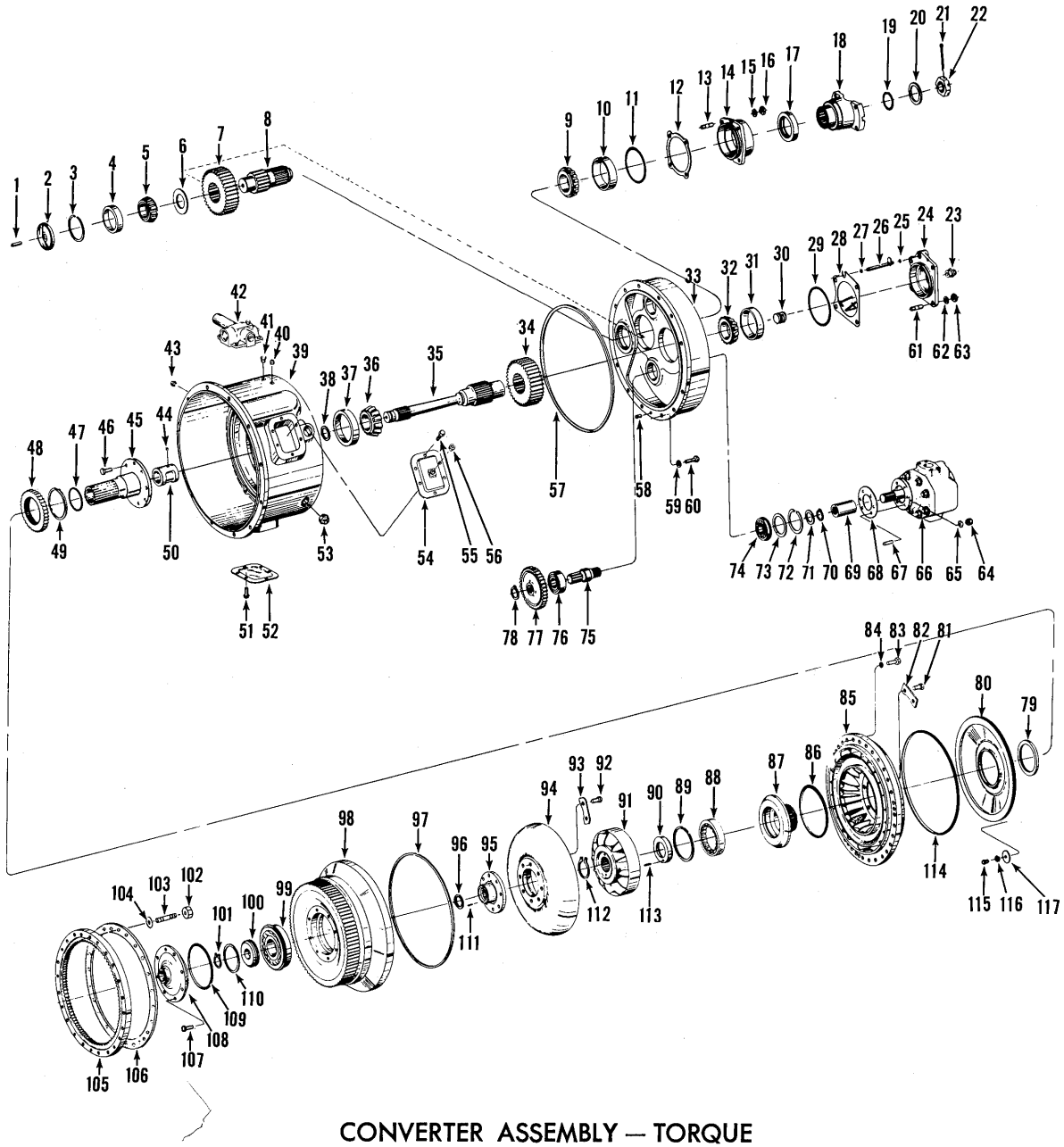

CONVERTER ASSEMBLY — TORQUE

TS-11476

https://truckmanualshub.com/

CONVERTER ASSEMBLY — TORQUE

For Serial: 425A101 thru 425B105

Item No.	Part No.	Description	No. Req'd.
A	283433	CONVERTER ASSY, Torque (C-8602-20) (Inc. 1 thru 101, 106 thru 117)	1
1	222031	TUBE, Oil	1
2	222027	BAFFLE, Oil	1
3	223900	RING, Front Bearing Retainer	1
4	675543	CUP, Front Bearing	1
5	731283	CONE, Front Bearing	1
6	218738	SPACER, Front Bearing	1
7	218728	GEAR, Output Shaft (38T)	1
8	218733	SHAFT, Output	1
9	710791	CONE, Rear Bearing	1
10	710790	CUP, Rear Bearing	1
11	25K-40420	O-RING, Bearing Cap	1
12	218742	‡SHIM, Bearing Cap — .004"	—
12A	218743	‡SHIM, Bearing Cap — .007"	—
12B	218744	‡SHIM, Bearing Cap — .010"	—
13	204347	STUD, Bearing Cap	4
14	218791	CAP, Bearing (Inc. 17)	1
15	4E-08	LKWSHR, Bearing Cap Stud	4
16	8D-08	NUT, Bearing Cap Stud	4
17	225763	SEAL, Bearing Cap Oil	1
18	217475	FLANGE, Output	1
19	25K-60204	O-RING, Output Flange	1
20	222181	WASHER, Output Flange	1
21	1F-632	COTTER, Flange Nut	1
22	201262	NUT, Output Flange	1
23	40K-04	PLUG, Pipe	1
24	218864	CAP, Bearing	1
25	25K-30012	O-RING, Lube Tube	1
26	218737	TUBE, Lube	1
27	25K-30012	O-RING, Lube Tube	1
28	218739	‡SHIM, Bearing Cap — .004"	—
28A	218740	‡SHIM, Bearing Cap — .007"	—
28B	218741	‡SHIM, Bearing Cap — .010"	—
29	25K-40424	O-RING, Bearing Cap	1
30	16F-04	PLUG, Turbine Shaft	1
31	710790	CUP, Bearing	1
32	710791	CONE, Bearing	1
33	227064	COVER, Rear Housing	1
34	218729	GEAR, Turbine Shaft (34T)	1
35	218731	SHAFT, Turbine	1
36	226027	CONE, Bearing	1
37	226026	CUP, Bearing	1
38	223570	RING, Piston	1
39	231592	HOUSING, Converter	1
40	40K-02	PLUG, Pipe	1
41	16F-06	PLUG, Pipe	1
42	———	VALVE, Pressure Regulator (See Index)	—
43	40K-02	PLUG, Pipe	1
44	10J-08	BALL, Oil Distributor Sleeve Lock	1
45	218723	SUPPORT, Converter (Inc. 44, 50)	1
46	8C-820	BOLT, Support to Housing	8
47	209673	RING, Piston	1
48	222035	GEAR, Oil Pump Drive (37T)	1
49	224009	RING, Gear Retaining	1
50	218725	SLEEVE, Oil Distributor	1
51	208261	BOLT & LKWSHR, Inspection Cover	6
52	201398	COVER, Inspection	1
53	13F-20	PLUG, Pipe	4
54	201398	COVER, Inspection	1
55	208261	BOLT & LKWSHR, Inspection Cover	6
56	16F-06	PLUG, Pipe	1
57	218779	O-RING, Cover to Housing	1

‡As Required

WHEN ORDERING PARTS, ALWAYS STATE MODEL AND SERIAL NO. OF MACHINE

https://truckmanualshub.com/

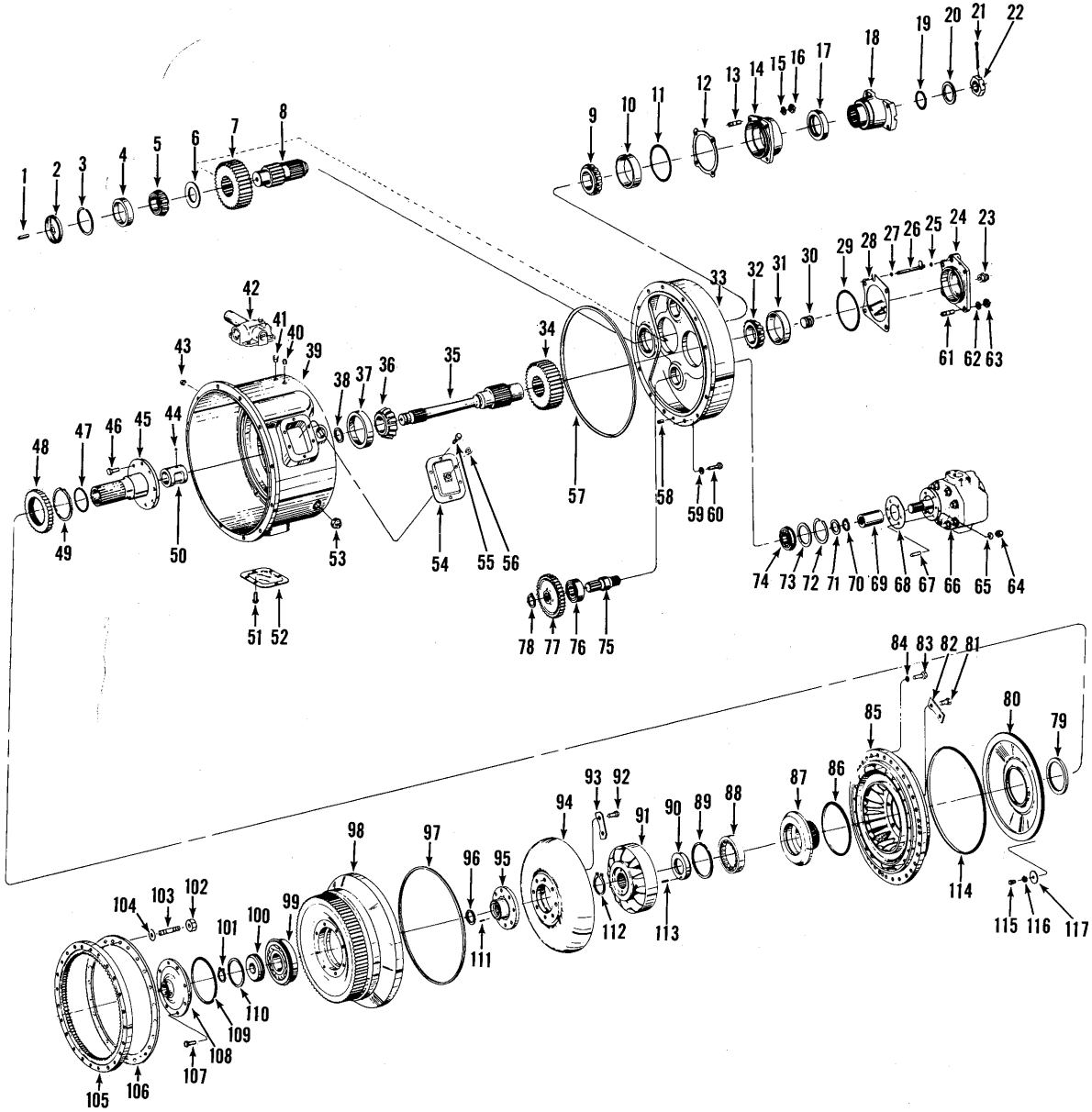

CONVERTER ASSEMBLY — TORQUE

TS-11476

https://truckmanualshub.com/

CONVERTER ASSEMBLY — TORQUE (Continued)
For Serial: 425A101 thru 425B105

Item No.	Part No.	Description	No. Req'd.
58	214295	PIN, Cover to Housing Locating Dowel	1
59	4E-07	LKWSHR, Cover to Housing	12
60	1C-722	BOLT, Cover to Housing	12
61	204347	STUD, Bearing Cap	4
62	4E-08	LKWSHR, Bearing Cap	4
63	8D-08	NUT, Bearing Cap	4
64	8D-06	NUT, Charging Pump Mounting	3
65	4E-06	LKWSHR, Charging Pump Mounting	3
66	450246	*PUMP, Converter Charging	1
67	203253	STUD, Charging Pump Mounting	3
68	551906	GASKET, Charging Pump	1
69	221992	SLEEVE, Charging Pump	1
70	224039	RING, Inner Washer Retaining	3
71	100838	WASHER, Rear Bearing — Inner	3
72	223961	RING, Bearing Washer Retainer	3
73	222038	WASHER, Rear Bearing — Outer	3
74	226025	BEARING, Pump Shaft Rear	3
75	216095	SHAFT, Pump Drive	3
76	225385	BEARING, Pump Shaft Front	3
77	222037	GEAR, Pump Driven (35T)	3
78	224036	RING, Driven Gear Retaining	3
79	214941	SEAL, Oil Baffle	1
80	218721	BAFFLE, Oil	1
81	222221	BOLT, Impeller to Hub	8
82	222019	LOCKPLATE, Impeller to Cover	4
83	1C-724	BOLT, Impeller to Cover	32
84	4E-07	LKWSHR, Impeller to Cover	32
85	222017	IMPELLER	1
86	60K-40700	O-RING, Impeller Hub	1
87	222018	HUB, Impeller	1
88	225778	BEARING, Impeller Hub	1
89	223988	RING, Impeller Hub Bearing Retainer	1
90	218782	SPACER, Reaction Member	1
91	801006	MEMBER, Reaction (Inc. 90, 113)	1
92	222223	BOLT, Turbine to Hub	8
93	222008	LOCKPLATE, Turbine to Hub	4
94	222002	TURBINE	1
95	218753	HUB, Turbine	1
96	223866	RING, Hub Retaining	1
97	218776	O-RING, Impeller to Cover	1
98	218755	COVER, Impeller	1
99	225781	BEARING, Front	1
100	218855	RETAINER, Bearing	1
101	663834	RING, Bearing Retainer Retaining	1
102	230647	NUT, Ring Gear Mounting	24
103	229768	STUD, Ring Gear Mounting	24
104	228987	WASHER, Belleville (Cupped)	96
105	226595	GEAR, Flywheel Ring	1
106	230594	RING, Ring Gear Mounting	1
107	8C-716	BOLT, Impeller Cover Cap	8
108	218717	CAP, Impeller Cover	1
109	60K-40608	O-RING, Impeller Cover Cap	1
110	211323	RING, Piston	1
111	221478	DOWEL, Turbine Hub Retaining	2
112	711161	RING, Reaction Member Retaining	1
113	302602	PIN, Reaction Member Spacer Roll	1
114	218777	O-RING, Oil Baffle	1
115	1C-612	BOLT, Oil Baffle	3
116	5E-06	LKWSHR, Oil Baffle	3
117	616786	WASHER, Oil Baffle	3
118	23C-724	†BOLT, Cover Housing to Engine	10
119	4E-07	†LKWSHR, Cover Housing to Engine	10

*NOTE: When Converter Charging Pump replacement is required, only a new factory built and tested pump should be used. Proper operation of converter and transmission is dependent on an efficient charging pump. Damage possible by use of a field rebuilt pump can result in repair cost exceeding cost of new pump alone.

†Not Illustrated

WHEN ORDERING PARTS, ALWAYS STATE MODEL AND SERIAL NO. OF MACHINE

https://truckmanualshub.com/

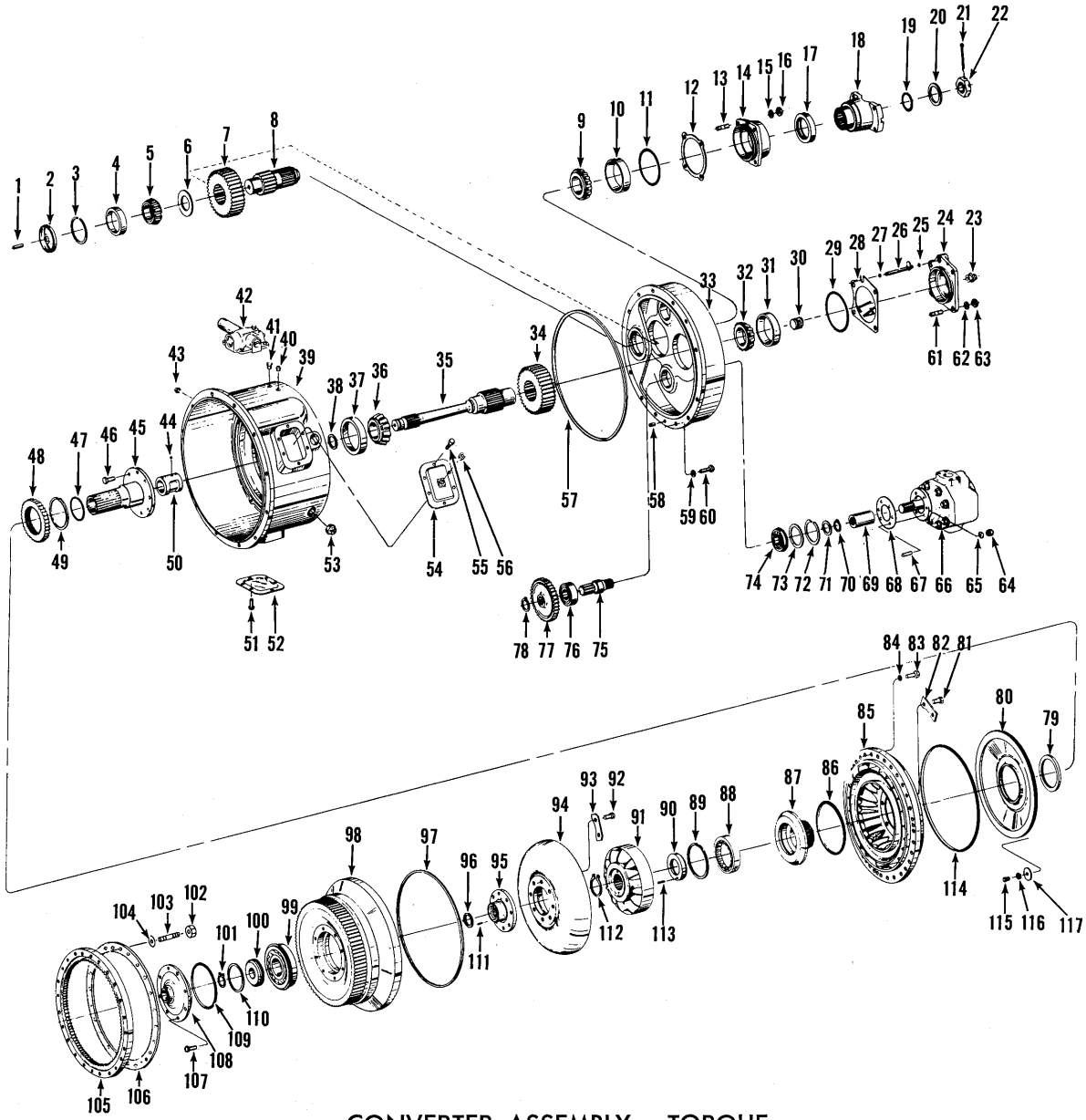

CONVERTER ASSEMBLY — TORQUE
For Serial: 425B106 & After

TS-11476

https://truckmanualshub.com/

CONVERTER ASSEMBLY — TORQUE

For Serial: 425B106 & After

Item No.	Part No.	Description	No. Req'd.
A	284037	CONVERTER ASSY, Torque (C-8502-11) (Inc. 1 thru 117)	1
1	222031	TUBE, Oil	1
2	222027	BAFFLE, Oil	1
3	223900	RING, Front Bearing Retaining	1
4	675543	CUP, Front Bearing	1
5	731283	CONE, Front Bearing	1
6	218738	SPACER, Front Bearing	1
7	219418	GEAR, Output Shaft (41T)	1
8	218733	SHAFT, Output	1
9	710791	CONE, Rear Bearing	1
10	710790	CUP, Rear Bearing	1
11	25K-40420	O-RING, Bearing Cap	1
12	218742	‡SHIM, Bearing Cap — .004	—
12A	218743	‡SHIM, Bearing Cap — .007	—
12B	218744	‡SHIM, Bearing Cap — .010	—
13	204347	STUD, Bearing Cap	4
14	218791	CAP, Bearing (Inc. 17)	1
15	4E-08	LKWSHR, Bearing Cap	4
16	8D-08	NUT, Bearing Cap	4
17	225763	SEAL, Bearing Cap Oil	1
18	217475	FLANGE, Output	1
19	25K-60204	O-RING, Flange	1
20	222181	WASHER, Flange	1
21	1F-632	COTTER, Flange Nut	1
22	201262	NUT, Flange	1
23	40K-04	PLUG, Pipe	1
24	218864	CAP, Bearing	1
25	25K-30012	O-RING, Lube Tube	1
26	218737	TUBE, Lube	1
27	25K-30012	O-RING, Lube Tube	1
28	218739	‡SHIM, Bearing Cap — .004	—
28A	218740	‡SHIM, Bearing Cap — .007	—
28B	218741	‡SHIM, Bearing Cap — .010	—
29	25K-40424	O-RING, Bearing Cap	1
30	16F-04	PLUG, Turbine Shaft	1
31	710790	CUP, Bearing	1
32	710791	CONE, Bearing	1
33	227064	COVER, Rear Housing	1
34	219417	GEAR, Turbine Shaft	1
35	218731	SHAFT, Turbine	1
36	226027	CONE, Bearing	1
37	226026	CUP, Bearing	1
38	223570	RING, Piston	1
39	231592	HOUSING, Converter	1
40	16F-06	PLUG, Pipe	1
41	40K-04	PLUG, Pipe	1
45	———	VALVE, Pressure Regulator — See Index	—
43	40K-02	PLUG, Pipe	1
44	10J-08	BALL, Oil Distributor Sleeve Lock	1
45	218723	SUPPORT, Converter (Inc. 44, 50)	1
46	8C-820	BOLT, Support to Housing	1
47	209673	RING, Piston	1
48	233658	GEAR, Oil Pump Drive (35T)	1
49	224009	RING, Gear Retaining	1
50	218725	SLEEVE, Oil Distributor	1
51	208261	BOLT & LKWSHR, Inspection Cover	6
52	201398	COVER, Inspection	1
53	13F-20	PLUG, Drain	4
54	201398	COVER, Inspection	1
55	208261	BOLT & LKWSHR, Inspection Cover	6
56	16F-06	PLUG, Pipe	1
57	218779	O-RING, Cover to Housing	1

‡As Required

WHEN ORDERING PARTS, ALWAYS STATE MODEL AND SERIAL NO. OF MACHINE

https://truckmanualshub.com/

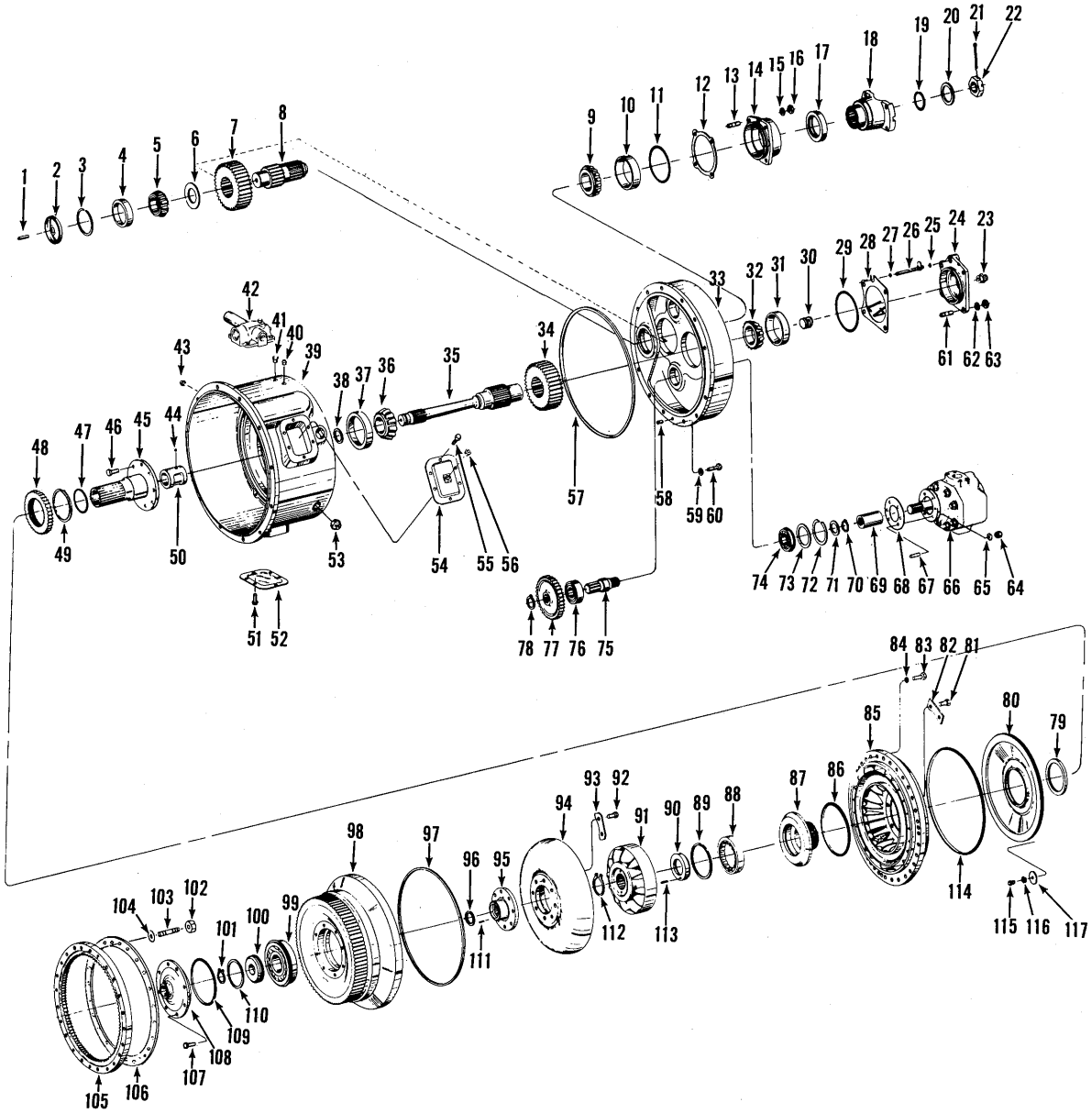

CONVERTER ASSEMBLY — TORQUE
For Serial: 425B106 & After

TS-11476

https://truckmanualshub.com/

CONVERTER ASSEMBLY — TORQUE (Continued)

For Serial: 425B106 & After

Item No.	Part No.	Description	No. Req'd.
58	214295	PIN, Cover Dowel	1
59	4E-07	LKWSHR, Cover to Housing	12
60	1C-722	BOLT, Cover to Housing	12
61	204347	STUD, Bearing Cap	4
62	4E-08	LKWSHR, Bearing Cap	4
63	8D-08	NUT, Bearing Cap	4
64	8D-06	NUT, Charging Pump Mounting	3
65	4E-06	LKWSHR, Charging Pump Mounting	3
66	450246	*PUMP, Converter Charging	1
67	203253	STUD, Charging Pump Mounting	3
68	551906	GASKET, Charging Pump	1
69	221992	SLEEVE, Charging Pump	1
70	224039	RING, Inner Washer Retaining	3
71	100838	WASHER, Rear Bearing — Inner	3
72	223961	RING, Bearing Washer Retaining	3
73	222038	WASHER, Rear Bearing — Outer	3
74	226025	BEARING, Pump Shaft — Rear	3
75	216095	SHAFT, Pump Drive	3
76	225385	BEARING, Pump Shaft — Front	3
77	233657	GEAR, Pump Driven (37T)	3
78	224036	RING, Driver Gear Retaining	3
79	214941	SEAL, Oil Baffle	1
80	218721	BAFFLE, Oil	1
81	222221	BOLT, Impeller to Hub	8
82	222019	LOCKPLATE, Impeller to Hub	4
83	1C-724	BOLT, Impeller to Cover	32
84	4E-07	LKWSHR, Impeller to Cover	32
85	222265	IMPELLER	1
86	60K-40700	O-RING, Impeller Hub	1
87	222266	HUB, Impeller	1
88	225778	BEARING, Impeller Hub	1
89	223988	RING, Impeller Hub Bearing Retainer	1
90	218782	SPACER, Reaction Member	1
91	218859	REACTION MEMBER	1
92	222223	BOLT, Turbine to Hub	8
93	222008	LOCKPLATE, Turbine to Hub	4
94	222263	TURBINE	1
95	218753	HUB, Turbine	1
96	223866	RING, Hub Retaining	1
97	218778	O-RING, Impeller to Cover	1
98	218870	COVER, Impeller	1
99	225781	BEARING, Front	1
100	218855	RETAINER, Bearing	1
101	663834	RING, Bearing Retainer Retaining	1
102	230647	NUT, Ring Gear Mounting	24
103	229768	STUD, Ring Gear Mounting	24
104	228987	WASHER, Belleville	96
105	226595	GEAR, Flywheel Ring	1
106	230594	RING, Ring Gear Mounting	1
107	8C-716	BOLT, Impeller Cover Cap	8
108	218717	CAP, Impeller Cover	1
109	60K-40608	O-RING, Impeller Cover Cap	1
110	211323	RING, Piston	1
111	221478	PIN, Turbine Hub Retaining Dowel	2
112	711161	RING, Reaction Member Retaining	1
113	302602	PIN, Reaction Member Spacer Roll	1
114	218777	O-RING, Oil Baffle	1
115	1C-612	BOLT, Oil Baffle	3
116	5E-06	LKWSHR, Oil Baffle	3
117	616786	WASHER, Oil Baffle	3
118	23C-724	†BOLT, Converter Housing to Engine	10
119	4E-07	†LKWSHR, Converter Housing to Engine	10

†Not Illustrated

*NOTE: When Converter Charging Pump replacement is required, only a new factory built and tested pump should be used. Proper operation of converter and transmission is dependent on an efficient charging pump. Damage possible by use of a field rebuilt pump can result in repair cost exceeding cost of a new pump alone.

WHEN ORDERING PARTS, ALWAYS STATE MODEL AND SERIAL NO. OF MACHINE

https://truckmanualshub.com/

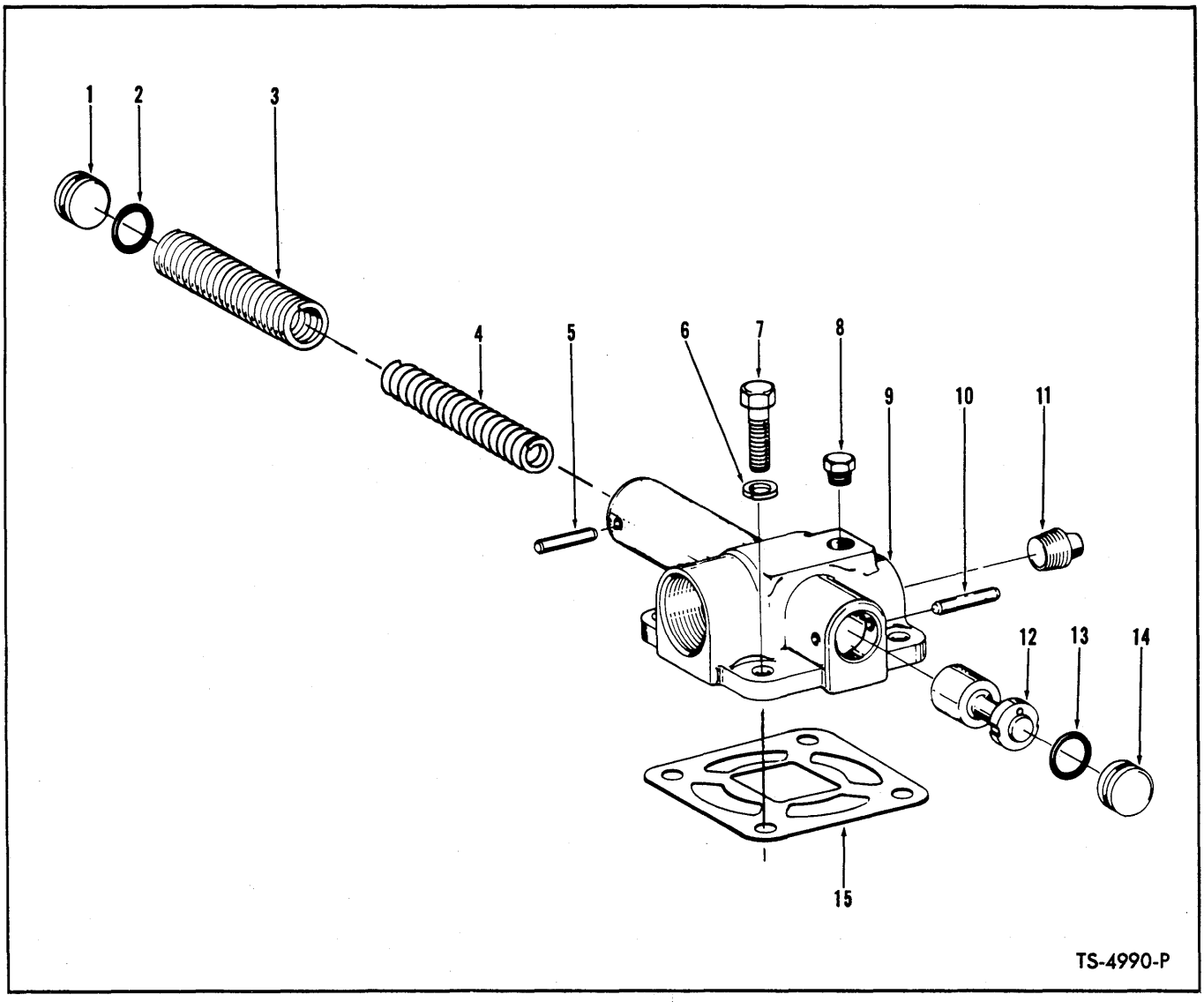

CONVERTER DOWNSTREAM PRESSURE REGULATING VALVE

Item No.	Part No.	Description	No. Req'd.
A	228499	VALVE ASSY (Inc. 1 thru 5, 8 thru 14)	1
1	222041	STOP, Piston	1
2	893267	"O" RING, Piston Stop	1
3	214668	SPRING, Pressure — Outer	1
4	227292	SPRING, Regulator — Inner	1
5	633157	PIN, Piston Stop Roll	1
6	4E-07	LKWSHR, Valve to Converter Housing	4
7	1C-722	BOLT, Valve to Converter Housing	4
8	40K-04	PLUG, Pressure Tap Pipe	1
9	227076	BODY, Pressure Regulating Valve	1
10	633157	PIN, Piston Stop Roll	1
11	13F-08	PLUG, Pipe	1
12	228500	PISTON, Regulating Valve	1
13	893267	"O" RING, Piston Stop	1
14	222041	STOP, Piston	1
15	227087	GASKET, Valve to Converter Housing	1

WHEN ORDERING PARTS, ALWAYS STATE MODEL AND SERIAL NO. OF MACHINE

https://truckmanualshub.com/

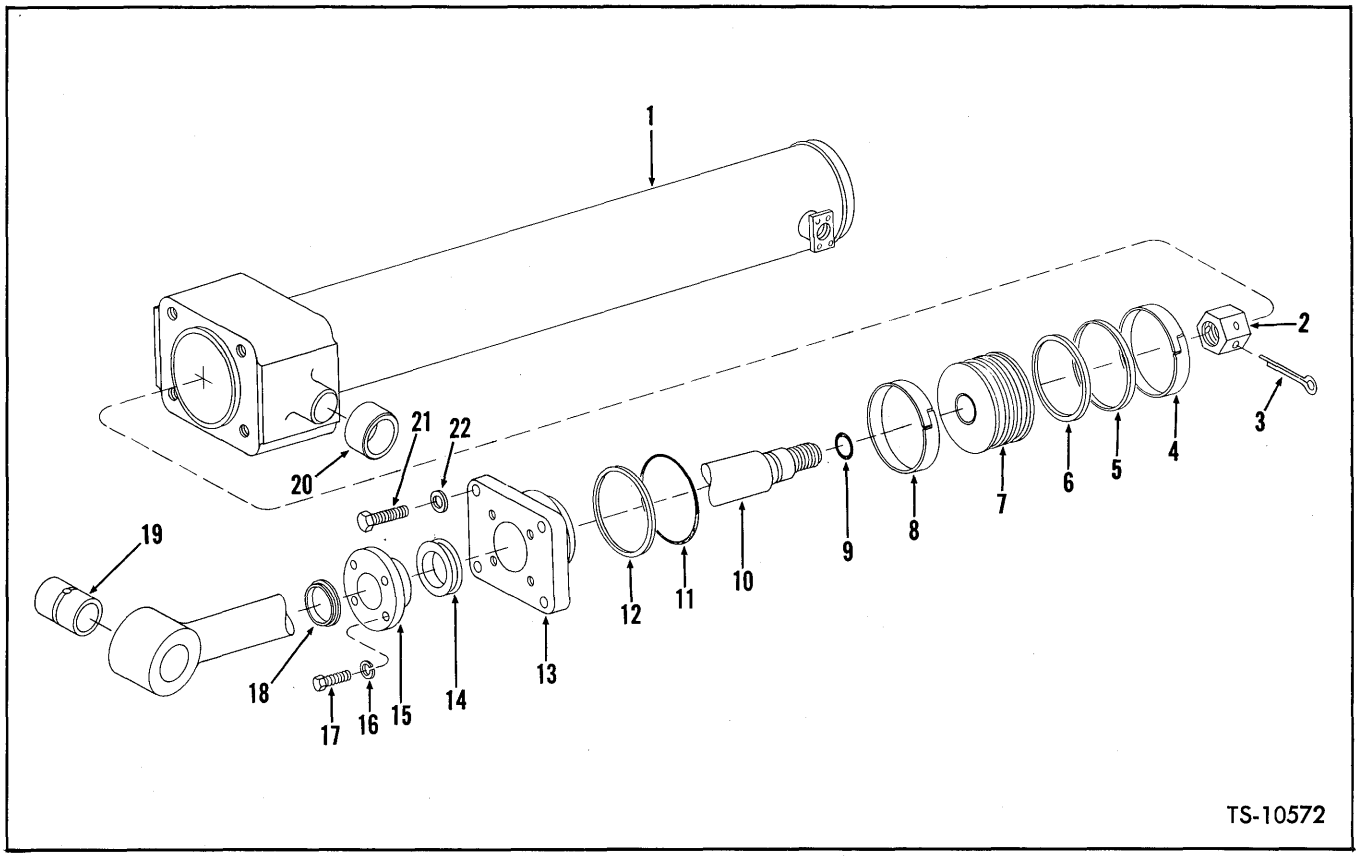

CYLINDER ASSEMBLY — BOOM — 9″

For Serial: 425A101 thru 360

Item No.	Part No.	Description	No. Req'd.
A	1537215	*BOOM CYLINDER ASSY — L.H. (Inc. 1 thru 22)	1
B	1537216	**BOOM CYLINDER ASSY — R.H. (Inc. 1 thru 22)	1
		NOTE: Two (2) Cylinders used per Machine—Quantities listed below are for One (1) Cylinder.	
1	1537212	CYLINDER (Inc. 20)	1
2	1512200	NUT, Piston Rod	1
3	1F-1080	COTTER, Piston Rod Nut	1
4	1503016	RING, Piston Wear	1
5	1503022	RING, Piston Outer Seal	1
6	1503470	RING, Piston Inner Seal	1
7	1503030	PISTON	1
8	1503016	RING, Piston Wear	1
9	25K-60212	O-RING, Piston Rod	1
10	1514373	ROD, Piston (Inc. 19)	1
11	25K-80816	O-RING, Cylinder Cap	1
12	1514010	RING, Cylinder Cap Back-Up	1
13	1537208	CAP, Cylinder	1
14	1537218	SEAL, Piston Rod	1
15	1537202	GLAND, Packing	1
16	4E-08	LKWSHR, Seal Retainer	4
17	24C-828	BOLT, Seal Retainer	4
18	1657101	WIPER, Piston Rod	1
19	588612	BUSHING, Piston Rod	1
20	1537201	BUSHING, Cylinder	2
21	24C-1656	BOLT, Cylinder Cap	4
22	660116	WASHER, Cylinder Cap	4

*NOTE: For replacement use 1511408.
**NOTE: For replacement use 1511407.

WHEN ORDERING PARTS, ALWAYS STATE MODEL AND SERIAL NO. OF MACHINE

https://truckmanualshub.com/

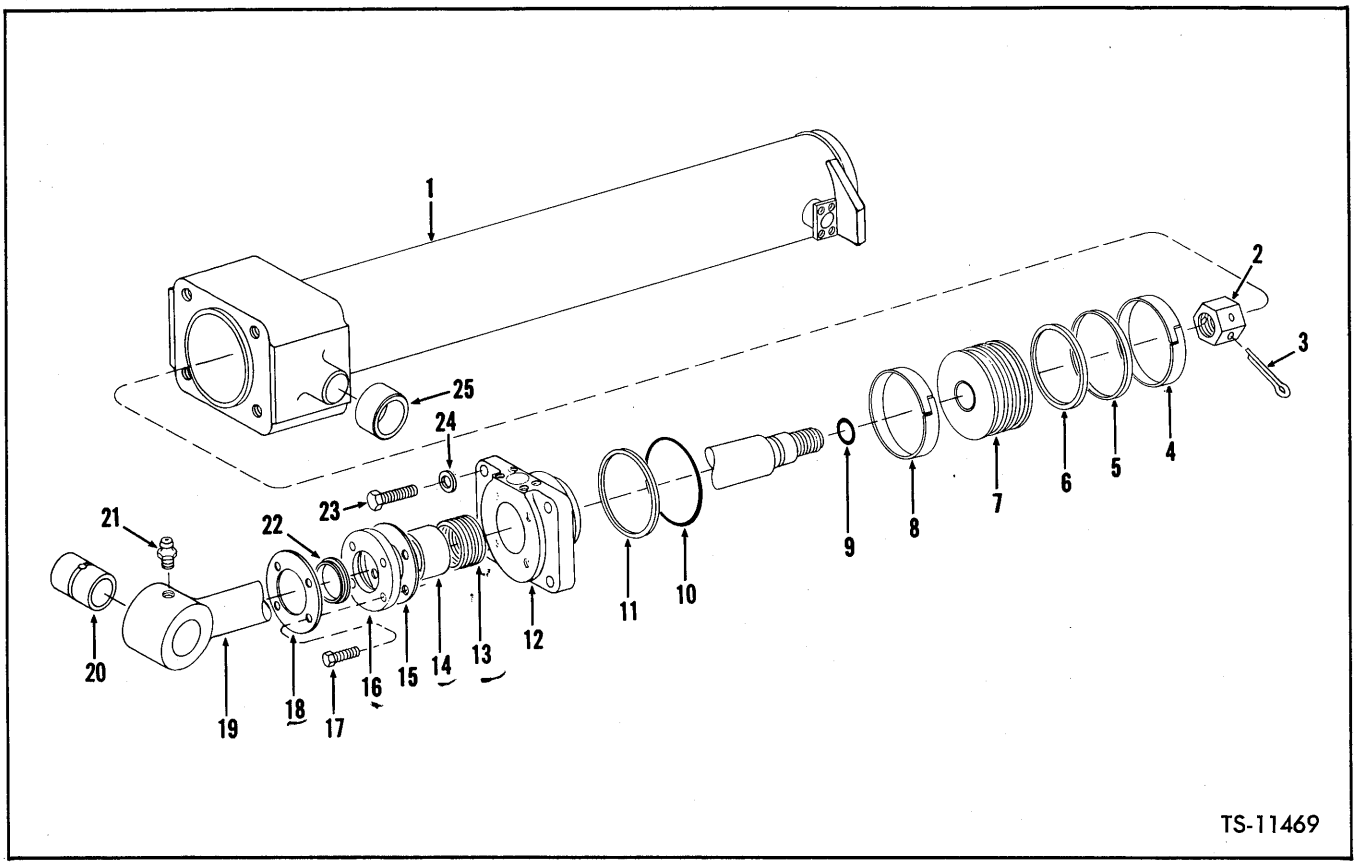

CYLINDER ASSEMBLY — BOOM — 9″

For Serial: 425A361 thru 999

Item No.	Part No.	Description	No. Req'd.
A	1511408	BOOM CYLINDER ASSEMBLY — L.H. (Inc. 1 thru 25)	1
B	1511407	BOOM CYLINDER ASSEMBLY — R.H. (Inc. 1 thru 25)	1
		NOTE: Two (2) Cylinders used per Machine—Quantities listed below are for One (1) Cylinder.	
1	1537212	CYLINDER (Inc. 26)	1
2	1514705	NUT, Piston Rod	1
3	1F-1080	COTTER, Piston Rod Nut	1
4	1503016	RING, Piston Wear	1
5	1503022	RING, Outer Seal	1
6	1503470	RING, Inner Seal	1
7	1503030	PISTON	1
8	1503016	RING, Piston Wear	1
9	25K-60212	O-RING, Piston Rod	1
10	1512910	O-RING, Cylinder Cap	1
11	1514010	RING, Cylinder Cap Back-Up	1
12	1537208	CAP, Cylinder	1
13	1511378	PACKING	1
14	1511879	BUSHING	1
15	1511385	SPACER, Flange	4
16	1511383	FLANGE	1
17	1514596	BOLT, Flange	4
18	1511386	RETAINER, Wiper	1
19	1514373	ROD, Piston (Inc. 20)	1
20	588612	BUSHING, Piston Rod	1
21	10H-25	FITTING, Piston Rod Grease	1
22	1549298	WIPER, Piston Rod	1
23	18C-1656	BOLT, Cylinder Cap	4
24	660116	WASHER, Cylinder Cap	4
25	1537201	BUSHING, Cylinder	2

WHEN ORDERING PARTS, ALWAYS STATE MODEL AND SERIAL NO. OF MACHINE

https://truckmanualshub.com/

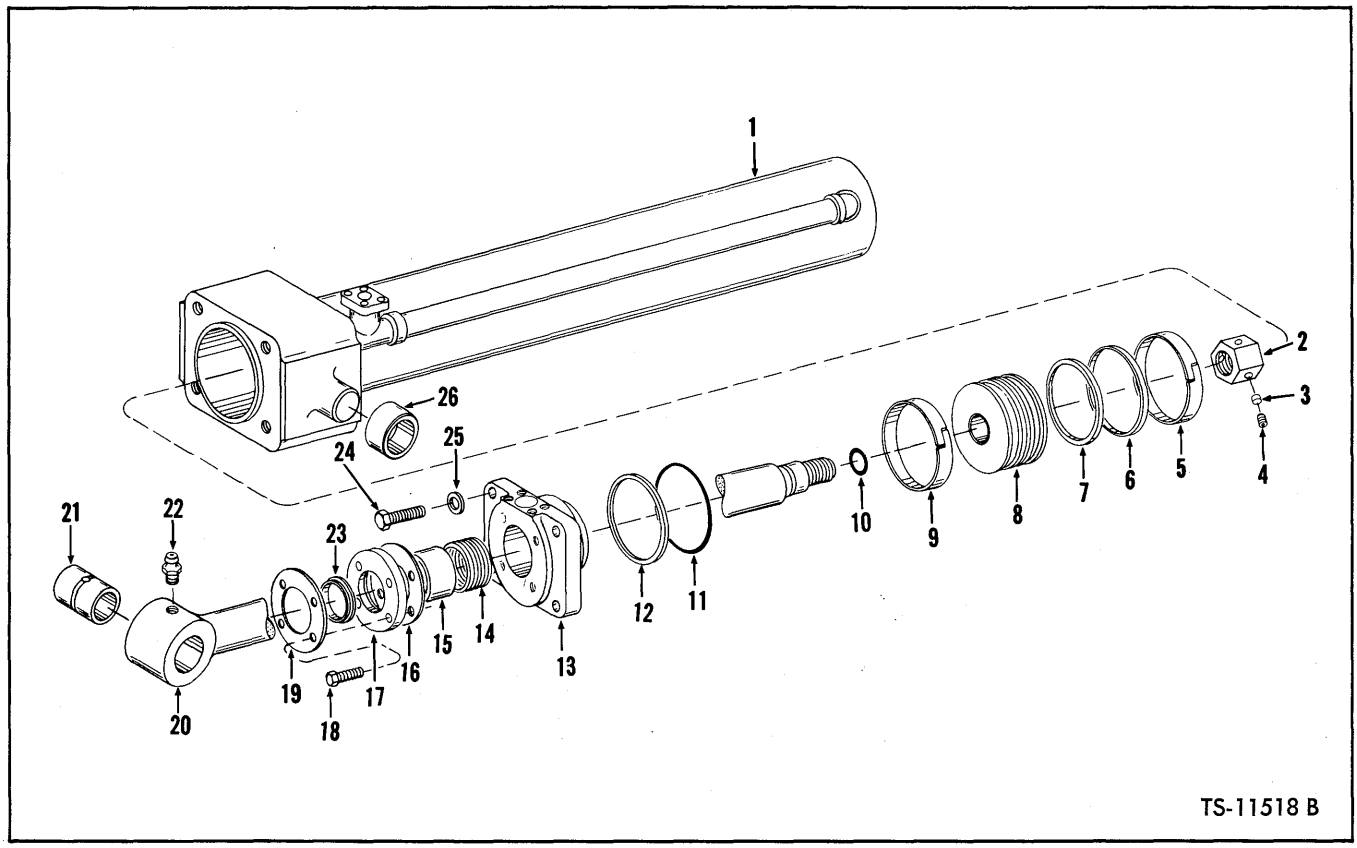

CYLINDER ASSEMBLY — BOOM — 9"

For Serial: 425B101 & After

Item No.	Part No.	Description	No. Req'd.
A	1512294	CYLINDER ASSEMBLY (Inc. 1 thru 21, 23 thru 26)	2
		NOTE: Two (2) Cylinders used per Machine—Quantities listed below are for One (1) Cylinder.	
1	1512515	CYLINDER (Inc. 26)	1
2	1513206	NUT, Piston Rod	1
3	1512368	INSERT, Locking	2
4	1513022	SET SCREW	2
5	1503016	RING, Piston Wear	1
6	1503022	RING, Outer Seal	1
7	1503470	RING, Inner Seal	1
8	1513208	PISTON	1
9	1503016	RING, Piston Wear	1
10	25K-60224	O-RING, Piston Rod	1
11	1512910	O-RING, Cylinder Cap	1
12	1514010	RING, Cylinder Cap Back-Up	1
13	1537208	CAP, Cylinder	1
14	1511378	PACKING	1
15	1511879	BUSHING	1
16	1511385	SPACER	4
17	1511383	FLANGE	1
18	1514596	BOLT, Flange	4
19	1511386	RETAINER, Wiper	1
20	1512295	ROD, Piston (Inc. 21)	1
21	588612	BUSHING, Piston Rod	1
22	10H-25	FITTING, Piston Rod Grease	1
23	1549298	WIPER, Piston Rod	1
24	18C-1656	BOLT, Cylinder Cap	4
25	1513789	WASHER, Cylinder Cap	4
26	1537201	BUSHING	2

WHEN ORDERING PARTS, ALWAYS STATE MODEL AND SERIAL NO. OF MACHINE

https://truckmanualshub.com/

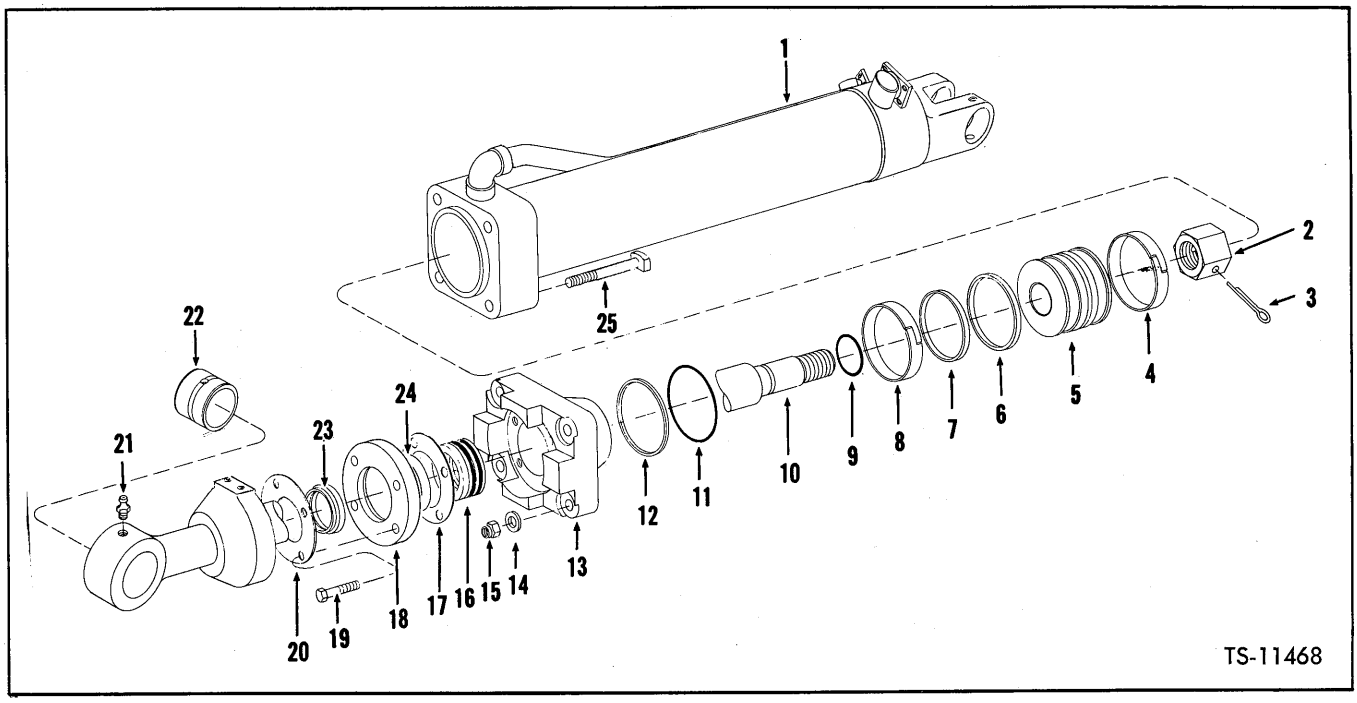

CYLINDER ASSEMBLY — BUCKET — 7"

For Serial: 425A101 thru 999

Item No.	Part No.	Description	No. Req'd.
A		*CYLINDER ASSEMBLY (Inc. 1 thru 20, 22 thru 25)*	
B	947456	For Serial Group "A"	1
C	1511406	For Serial Group "B"	1
		NOTE: Two (2) Cylinders used per Machine—Quantities listed below are for One (1) Cylinder.	
1		*CYLINDER, Bucket*	
1A	1509391	For Serial Group "A"	1
1B	1512190	For Serial Group "B"	1
2	1514650	NUT, Piston Rod	1
3	1F-1068	COTTER, Piston Rod Nut	1
4	1503014	RING, Piston Wear	1
5	1503028	PISTON	1
6	1503020	RING, Piston Outer Seal	1
7	1503468	RING, Piston Inner Seal	1
8	1503014	RING, Piston Wear	1
9	25K-60120	O-RING, Piston Rod	1
10	1509394	ROD, Piston (Inc. 22)	1
11	1512908	O-RING, Cylinder Cap	1
12	1514008	RING, Back-Up	1
13	1511942	CAP, Cylinder	1
14	1534237	WASHER, Cylinder Cap	4
15	18D-14	NUT, Cylinder Cap	4
16	1511229	PACKING	1
17	1511230	SPACER, Flange	4
18	1511231	FLANGE	1
19	1514633	BOLT, Plate	4
20	1510142	PLATE, Wiper & Flange Retaining	1
21	10H-25	FITTING, Piston Rod Grease	1
22	588619	BUSHING, Piston Rod	1
23	1542646	WIPER, Piston Rod	1
24	1511232	SLEEVE	1
25	1537344	BOLT, Cylinder Cap	4

Serial Group "A": 425A101 thru 316, 318 thru 325, 327 thru 330, 332 thru 336.
Serial Group "B": 425A317, 326, 331, 337 thru 999.

WHEN ORDERING PARTS, ALWAYS STATE MODEL AND SERIAL NO. OF MACHINE

https://truckmanualshub.com/

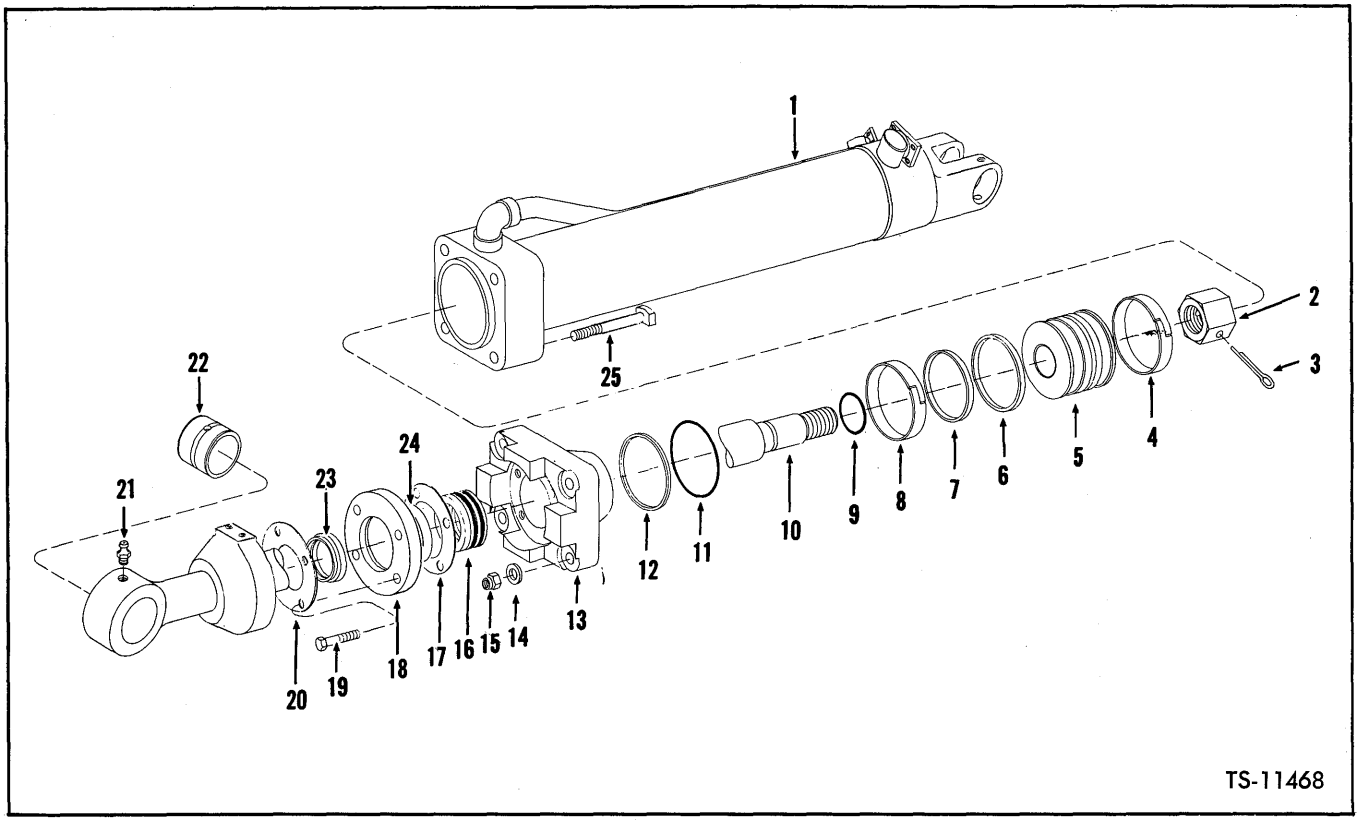

CYLINDER ASSEMBLY — BUCKET — 7"

For Serial: 425B101 & After

Item No.	Part No.	Description	No. Req'd.
A	1513815	CYLINDER ASSEMBLY (Inc. 1 thru 20, 22 thru 25A)	—
		NOTE: Two (2) Cylinders used per Machine—Quantities listed below are for One (1) Cylinder.	
1	1513810	CYLINDER, Bucket	1
2	1513540	NUT, Piston Rod	1
3	1F-1072	COTTER, Piston Rod Nut	1
4	1503014	RING, Wear	1
5	1513542	PISTON	1
6	1503020	RING, Outer Seal	1
7	1503468	RING, Inner Seal	1
8	1503014	RING, Wear	1
9	25K-60204	O-RING, Piston Rod	1
10	1513802	ROD, Piston (Inc. 22)	1
11	1512908	O-RING, Cylinder Cap	1
12	1514008	RING, Cylinder Cap Back-Up	1
13	1513808	CAP, Cylinder	1
14	1534237	WASHER, Cylinder Cap	4
15	68D-14	NUT, Cylinder Cap	4
16	1511229	PACKING	1
17	1511230	SPACER, Flange	1
18	1511231	FLANGE	1
19	1514633	BOLT, Plate	4
20	1510142	PLATE, Wiper & Flange Relay	1
21	10H-25	FITTING, Piston Rod Grease	1
22	588619	BUSHING, Piston Rod	1
23	1542646	WIPER, Piston Rod	1
24	1511232	SLEEVE	1
25	1518865	BOLT, Cylinder Cap	4
25A	1534237	†WASHER, Cylinder Cap	4

†Not Illustrated

WHEN ORDERING PARTS, ALWAYS STATE MODEL AND SERIAL NO. OF MACHINE

https://truckmanualshub.com/

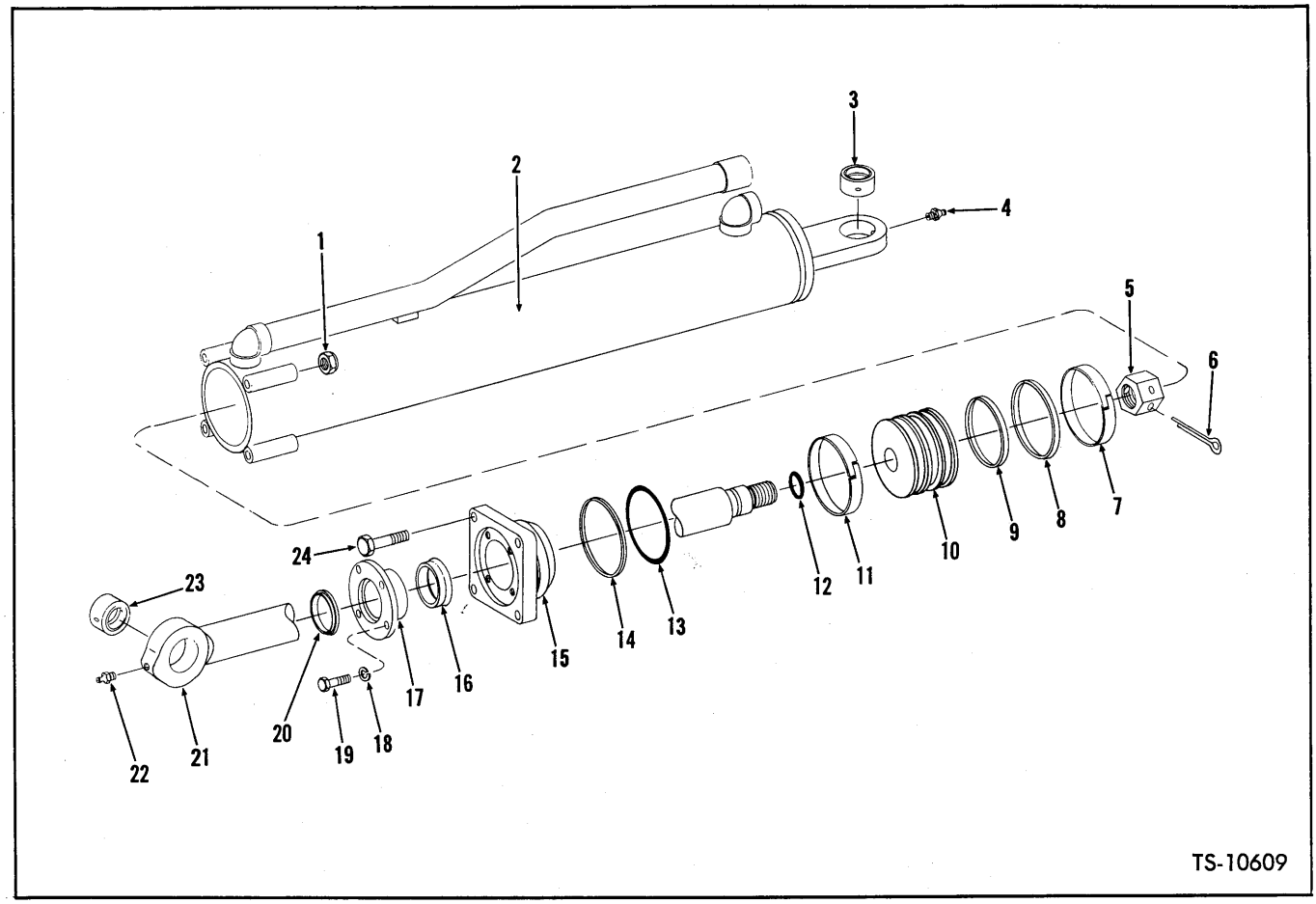

CYLINDER ASSEMBLY — STEERING — 5¼"

Item No.	Part No.	Description	No. Req'd.
A	(1538181) A511749	CYLINDER ASSY (Inc. 1, 2, 5 thru 21, 24)	2
		NOTE: Two (2) Cylinders used per Machine—Quantities listed below are for One (1) Cylinder.	
1	68D-10	NUT, Cylinder Cap	4
2	1538180	CYLINDER	1
3	713418	BUSHING, Cylinder	1
4	11H-15	FITTING, Cylinder Grease	1
5	1514735	NUT, Piston Rod	1
6	1F-860	COTTER, Piston Rod Nut	1
7	1503033	RING, Piston Wear	1
8	1503019	RING, Piston Outer Seal	1
9	1503466	RING, Piston Inner Seal	1
10	1503027	PISTON	1
11	1503033	RING, Piston Wear	1
12	25K-40120	O-RING, Piston Rod	1
13	1512906	O-RING, Cylinder Cap	1
14	1514006	RING, Back-Up	1
15	1538179	CAP, Cylinder	1
16	1538171	SEAL, Piston Rod	1
17	1538176	GLAND, Packing	1
18	4E-06	LKWSHR, Seal Retaining	4
19	24C-624	BOLT, Seal Retaining	4
20	1657092	WIPER, Piston Rod	1
21	1538178	ROD, Piston	1
22	11H-15	FITTING, Piston Rod Grease	1
23	713418	BUSHING, Piston Rod	1
24	24C-1080	BOLT, Cylinder Cap	1

WHEN ORDERING PARTS, ALWAYS STATE MODEL AND SERIAL NO. OF MACHINE

https://truckmanualshub.com/

"E" GROUP

CONTENTS

Electrical Group:

Electrical Gauges and Instrument Panel E3

Electrical Wiring and Cables E5

Electrical Wiring Diagram E9

Batteries, Battery Box and Hold Down E12

Engine Group:

Engine Accessories E13

Engine Accessories and Support Parts E14

Engine Air Cleaner and Connections E15

Engine Controls E16

Engine Exhaust System E17

https://truckmanualshub.com/

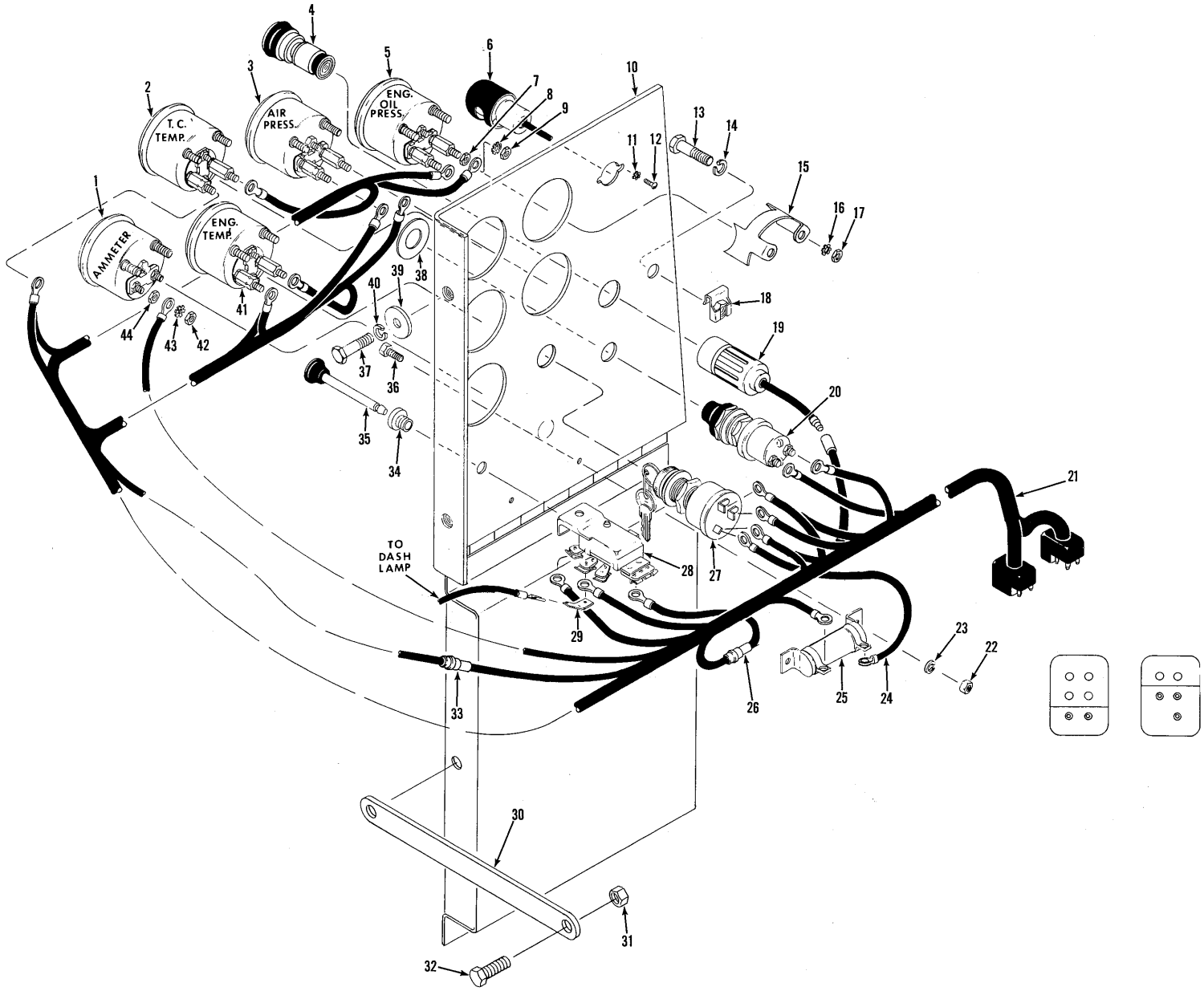

ELECTRICAL GAUGES & INSTRUMENT PANEL

TS-9914

https://truckmanualshub.com/

ELECTRICAL GAUGES & INSTRUMENT PANEL

Item No.	Part No.	Description	No. Req'd.
1	949286	AMMETER	1
2	947254	GAUGE, Torque Converter Temp.	1
3	947250	GAUGE, Air Pressure	1
4	944803	ELEMENT, Lighter	1
5	948131	GAUGE, Engine Oil Pressure	1
6	574276	LAMP, Dash	1
6A	945055	†BULB, Dash Lamp	1
7	12D-6	NUT, Gauge Terminal	5
8	12E-6	LKWSHR, Gauge Terminal	5
9	12D-6	NUT, Gauge Terminal	5
10	1544683	PANEL, Instrument	1
11	12E-6	LKWSHR, Dash Lamp Mounting	2
12	18G-606	SCREW, Dash Lamp Mounting	2
13	23C-616	BOLT, Instrument Panel Mounting	1
14	4E-06	LKWSHR, Instrument Panel Mounting	1
15	1534136	CLAMP, Gauge Mounting	5
16	12E-10	LKWSHR, Clamp to Gauge	10
17	14D-10	NUT, Clamp to Gauge	10
18	572729	CAGED NUT, Instrument Panel	1
19	549024	RECEPTACLE, Lighter (Inc. 19A)	1
19A	944804	†FUSE, Lighter	1
20	600259	BUTTON, Starter Push (Inc. 20A)	1
20A	857420	†BOOT, Starter Push Button Rubber	1
21	1513293	HARNESS, Instrument Wiring (Inc. 26, 33)	1
22	12D-6	NUT, Resistor Mounting	2
23	17E-6	LKWSHR, Resistor Mounting	2
24	663579	WIRE, Ignition	1
25	556489	RESISTOR, Voltage	1
26	611074	FUSE — 20 Amp.	1
27	573548	SWITCH, Ignition	1
28	550741	SWITCH, Light	1
29	574275	TAB, Connecting	1
30	1544614	BRACKET, Cover Support	1
31	18D-05	NUT, Bracket to Cockpit	1
32	23C-816	BOLT, Bracket to Cockpit	1
33	571021	FUSE — ¾ Amp.	1
34	550743	BUSHING, Light Switch	1
35	550742	ROD, Light Switch	1
36	85G-608	SCREW, Resistor Mounting	2
37	23C-616	BOLT, Instrument Panel Mounting	2
38	547237	DISC, Starter Button	1
39	656672	WASHER, Instrument Panel Mounting	2
40	4E-06	LKWSHR, Instrument Panel Mounting	2
41	947252	GAUGE, Engine Temperature	1
42	12D-6	NUT, Gauge Terminal	2
43	12E-6	LKWSHR, Gauge Terminal	3
44	12D-6	NUT, Gauge Terminal	1

†Not Illustrated

WHEN ORDERING PARTS, ALWAYS STATE MODEL AND SERIAL NO. OF MACHINE

https://truckmanualshub.com/

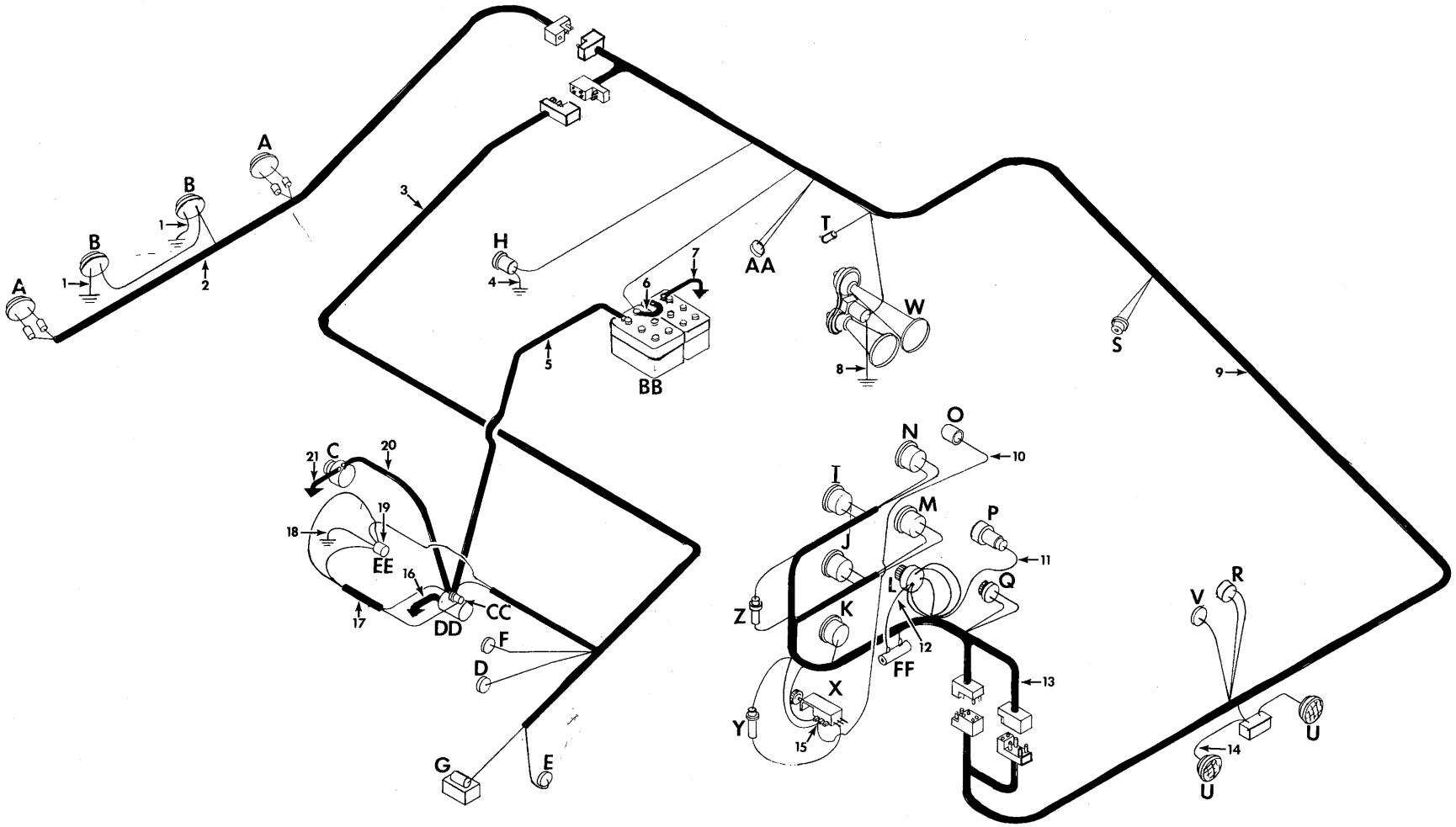

ELECTRICAL WIRING & CABLES
For Serial: 425A101 thru 425A360

TS-11597 B

https://truckmanualshub.com/

ELECTRICAL WIRING & CABLES

For Serial: 425A101 thru 425A360

No. Item	No. Part	Description	No. Req'd.
1	540882	WIRE, Back-up Lamp to Ground	2
2	1542813	WIRE HARNESS, Rear Lights	1
3	1542814	WIRE HARNESS, Engine	1
4	558960	WIRE, Hourmeter to Ground	1
5	1510729	CABLE, Battery to Starter	1
6	529359	CABLE, Battery to Battery	1
7	1547130	CABLE, Battery to Ground	1
8	1523329	WIRE, Horn to Ground	1
9	1542816	WIRE HARNESS, Main	1
10	———	WIRE, Dash Lamp (Part of Dash Lamp)	1
11	———	WIRE, Lighter to Harness (Part of Lighter)	1
12	630292	WIRE, Resistor to Ignition Switch	1
13	1504605	WIRE HARNESS, Instrument Panel	1
14	1542815	WIRE HARNESS, Front Lights	1
15	574275	CONNECTOR, Light Switch to Wire	1
16	532549	CABLE, Starter to Ground	1
17	1530361	WIRE, Solenoid to Solenoid	1
18	543483	WIRE, Solenoid to Ground	1
19	1529233	SOLENOID	1
20	1538211	WIRE, Starter to Alternator	1
21	1509033	WIRE, Alternator to Ground	1

A — Stop and Tail Lamps
B — Back-up Lamps
C — Alternator
D — Engine Oil Pressure Sender
E — Engine Temperature Sender
F — Converter Temperature Sender
G — Fuel Solenoid
H — Hourmeter
I — Converter Temperature Gauge
J — Engine Temperature Gauge
K — Voltmeter
L — Ignition Switch
M — Air Pressure Gauge
N — Engine Oil Pressure Gauge
O — Dash Lamp
P — Lighter
Q — Starter Button
R — Stop Light Switch
S — Horn Switch
T — Heater Connector
U — Headlamps
V — Air Pressure Sender
W — Horn
X — Light Switch
Y — 20 Amp Fuse
Z — ¾ Amp Fuse
AA — Neutral Start Switch
BB — Batteries
CC — Starter Solenoid
DD — Starter
EE — Solenoid
FF — Resistor

WHEN ORDERING PARTS, ALWAYS STATE MODEL AND SERIAL NO. OF MACHINE

https://truckmanualshub.com/

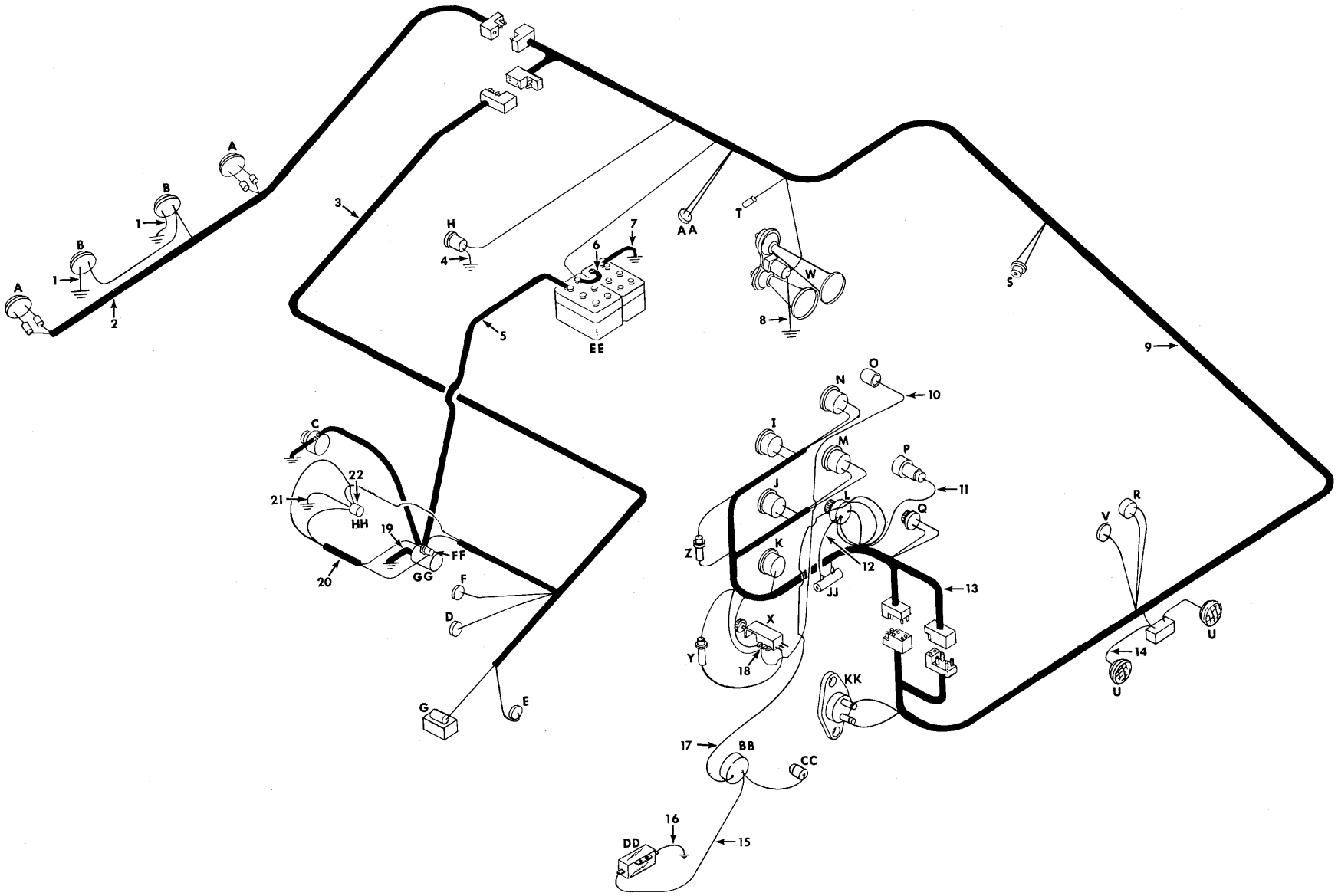

ELECTRICAL WIRING & CABLES
For Serial: 425A361 & After

TS-11573

https://truckmanualshub.com/

ELECTRICAL WIRING & CABLES

For Serial: 425A361 & After

Item No.	Part No.	Description	No. Req'd.
1	540882	WIRE, Back-up Lamp to Ground	2
2	1542813	WIRE HARNESS, Rear Lights	1
3	1513291	WIRE HARNESS, Engine	1
4	558960	WIRE, Hourmeter to Ground	1
5	1510729	CABLE, Battery to Starter	1
6	529359	CABLE, Battery to Battery	1
7	1514862	CABLE, Battery to Ground	1
8	1523329	WIRE, Horn to Ground	1
9	1514299	WIRE HARNESS, Main	1
10	———	§WIRE, Light Switch to Dash Lamp (Part of Dash Lamp)	1
11	———	§WIRE, Lighter to Harness (Part of Lighter)	1
12	663579	WIRE, Resistor to Ignition Switch	1
13	1513293	WIRE HARNESS, Cockpit	1
14	1542815	WIRE HARNESS, Front Lights	1
15	663579	WIRE, Sender to Buzzer	1
16	543483	WIRE, Buzzer to Ground	1
17	1548924	WIRE, Switch to Sender	1
18	574275	CONNECTOR, Light Switch to Wire	1
19	532549	CABLE, Starter to Ground	1
20	1530361	WIRE, Solenoid to Solenoid	1
21	543483	WIRE, Solenoid to Ground	1
22	1529233	SOLENOID	1

A — Stop & Tail Lamps
B — Back-up Lamps
C — Alternator
D — Engine Oil Pressure Sender
E — Engine Temperature Sender
F — Converter Temperature Sender
G — Fuel Solenoid
H — Hourmeter
I — Converter Temperature Gauge
J — Engine Temperature Gauge
K — Voltmeter
L — Ignition Switch
M — Air Pressure Gauge
N — Engine Oil Pressure Gauge
O — Dash Lamp
P — Lighter
Q — Starter Button
R — Stop Light Switch
S — Horn Switch
T — Heater Connector
U — Headlamps
V — Air Pressure Sender
W — Horn
X — Light Switch
Y — 20 Amp Fuse
Z — ¾ Amp Fuse
AA — Neutral Start Switch
BB — Low Pressure Sender
CC — Warning Light
DD — Buzzer
EE — Batteries
FF — Starter Solenoid
GG — Starter
HH — Starter Relay
JJ — Resistor
KK — Circuit Breaker

WHEN ORDERING PARTS, ALWAYS STATE MODEL AND SERIAL NO. OF MACHINE

https://truckmanualshub.com/

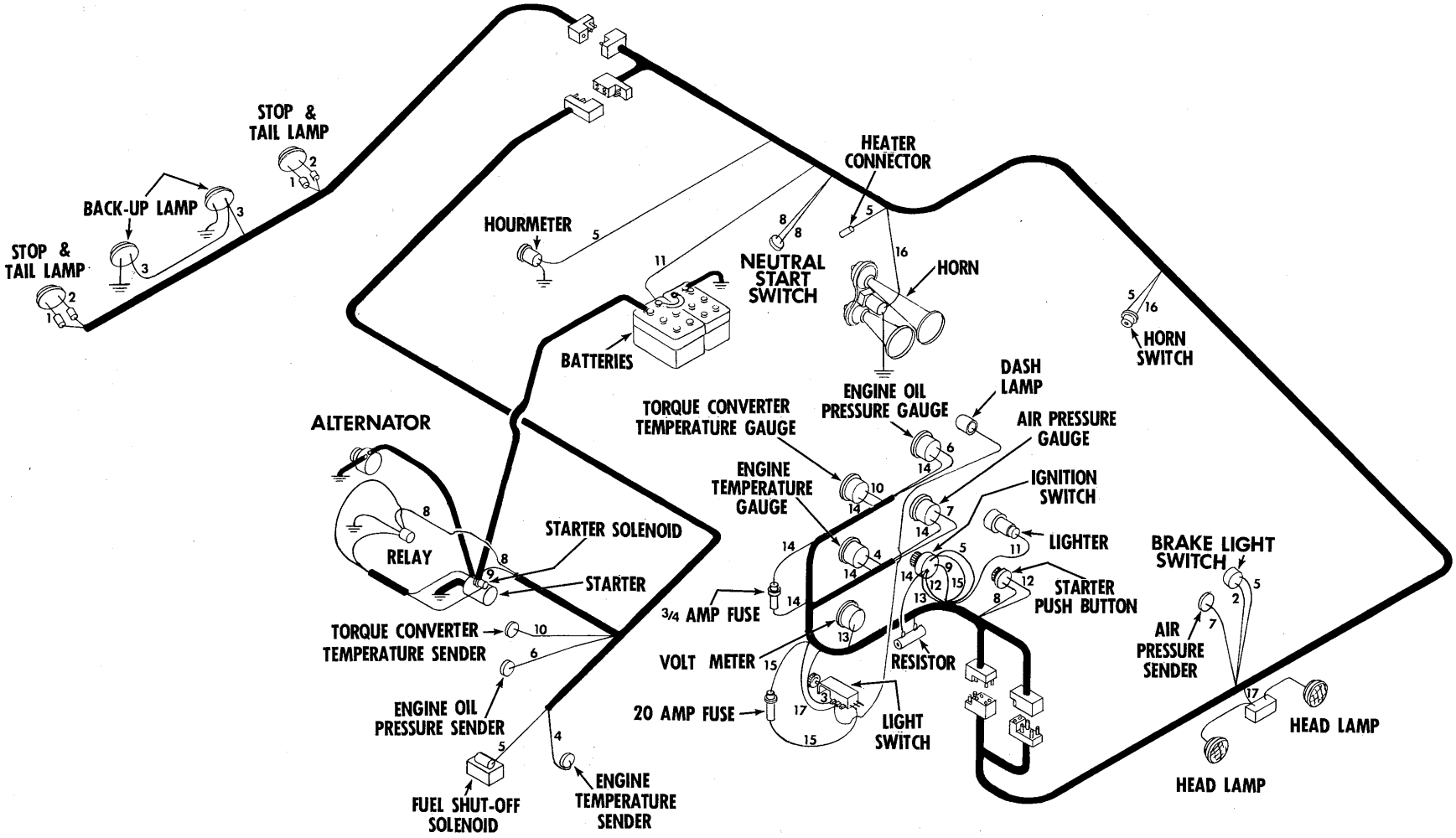

ELECTRICAL WIRING DIAGRAM (425A101 thru 425A360)

TS-10552

https://truckmanualshub.com/

ELECTRICAL WIRING DIAGRAM
COLOR CODE CHART FOR USE WITH TS-10552
(425A101 thru 425A360)

Ref. No.	Color	Color Code
1.	Tan	Stoplights to Brake Light Switch
2.	Yellow	Tail Lights to Instrument Panel Plug (Pink)
3.	Dark Blue	Rear Floodlamps to Light Switch
4.	Brown	Engine Temp. Sender to Engine Temp. Gauge
5.	Red & White	Ignition Switch to Hourmeter & Switches
6.	Dark Green	Engine Oil Press. Sender to Oil Press. Gauge
7.	Light Green	Air Press. Sender to Air Press. Gauge
8.	White	Starter Button to Neutral Start Switch to Relay
9.	Red	Ignition Switch to Starter Solenoid
10.	Grey	Converter Temp. Sender to Converter Temp. Gauge
11.	Orange	Battery to Lighter
12.	Black	Ignition Switch to Starter Button
13.	Purple & White	Ignition Switch to Voltmeter
14.	Purple	Ignition Switch to Resistor to Fuse to Gauges
15.	Violet	Ignition Switch to Fuse to Light Switch
16.	Light Blue	Horn Switch to Horn
17.	Pink	Light Switch to Front Floodlamps

https://truckmanualshub.com/

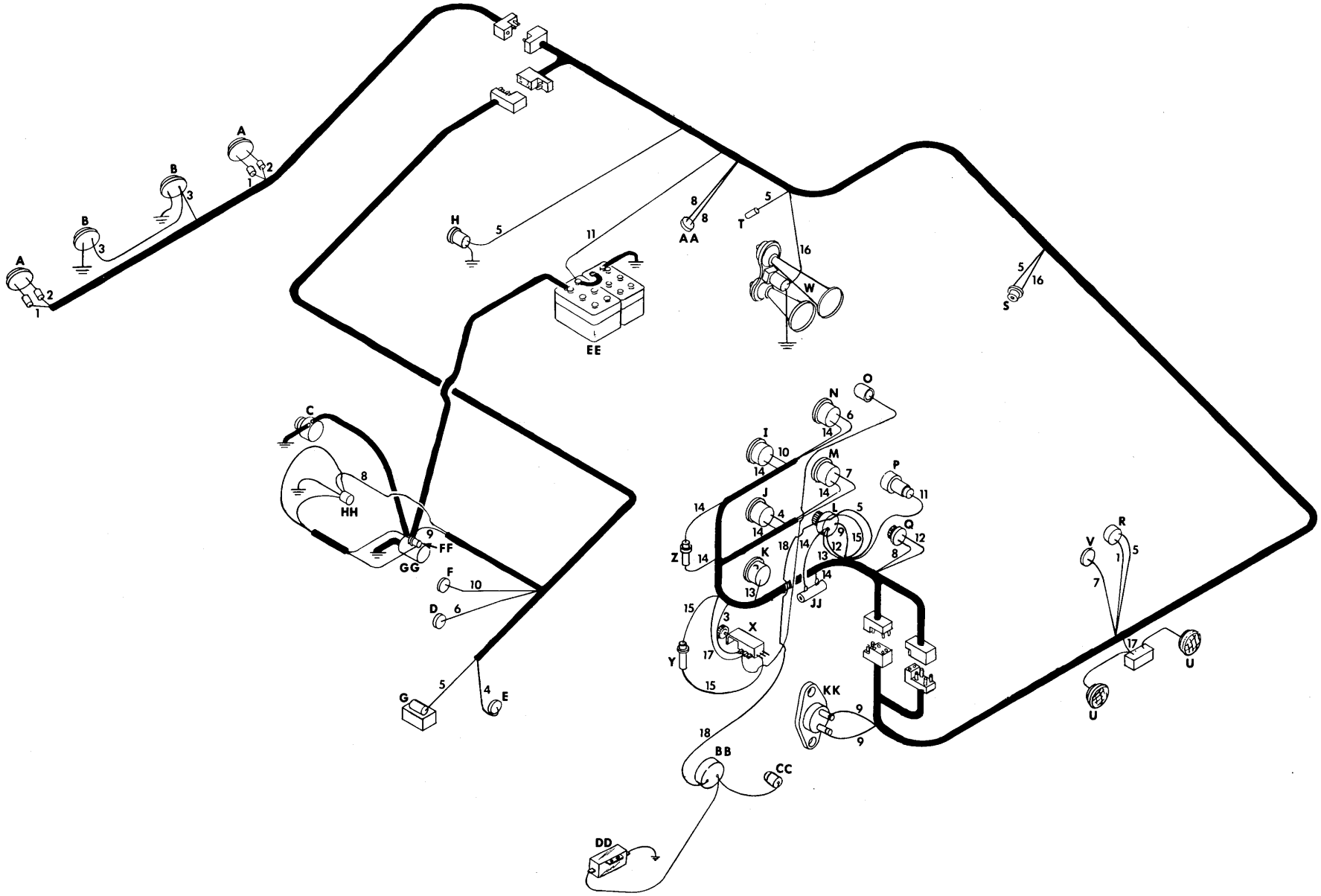

ELECTRICAL WIRING DIAGram (425A361 & After)

TS-11508 B

https://truckmanualshub.com/

ELECTRICAL WIRING DIAGRAM
COLOR CODE REFERENCE CHART FOR USE WITH TS-11508-B
(For Serial: 425A361 & After)

Ref. No.	Color	Color Code
1.	Tan	Stop Lights to Stop Light Switch
2.	Yellow	Tail Lights to Instrument Panel Plug (Joins Pink)
3.	Dark Blue	Back-Up Lights to Light Switch
4.	Brown	Engine Temp. Sender to Engine Temp. Gauge
5.	Red & White	Ignition Switch to Hourmeter, Relay & Switches
6.	Dark Green	Engine Oil Press. Sender to Engine Oil Press. Gauge
7.	Light Green	Air Press. Sender to Air Press. Gauge
8.	White	Starter Button to Neutral Start Switch to Starter Relay
9.	Red	Ignition Switch to Circuit Breaker to Starter Solenoid
10.	Grey	Converter Temp. Sender to Converter Temp. Gauge
11.	Orange	Battery to Lighter
12.	Black	Ignition Switch to Starter Button
13.	Purple & White	Ignition Switch to Voltmeter
14.	Purple	Ignition Switch to Resistor to Fuse to Gauges
15.	Violet	Ignition Switch to Fuse to Light Switch
16.	Light Blue	Horn Switch to Horn
17.	Pink	Light Switch to Headlamps
18.	Black	Ignition Switch to Low Pressure Sender

A — Stop & Tail Lamps
B — Back-up Lamps
C — Alternator
D — Engine Oil Pressure Sender
E — Engine Temperature Sender
F — Converter Temperature Sender
G — Fuel Solenoid
H — Hourmeter
I — Converter Temperature Gauge
J — Engine Temperature Gauge
K — Voltmeter
L — Ignition Switch
M — Air Pressure Gauge
N — Engine Oil Pressure Gauge
O — Dash Lamp
P — Lighter
Q — Starter Button
R — Stop Light Switch
S — Horn Switch
T — Heater Connector
U — Headlamps
V — Air Pressure Sender
W — Horn
X — Light Switch
Y — 20 Amp Fuse
Z — ¾ Amp Fuse
AA — Neutral Start Switch
BB — Low Pressure Sender
CC — Warning Light
DD — Buzzer
EE — Batteries
FF — Starter Solenoid
GG — Starter
HH — Starter Relay
JJ — Resistor
KK — Circuit Breaker

https://truckmanualshub.com/

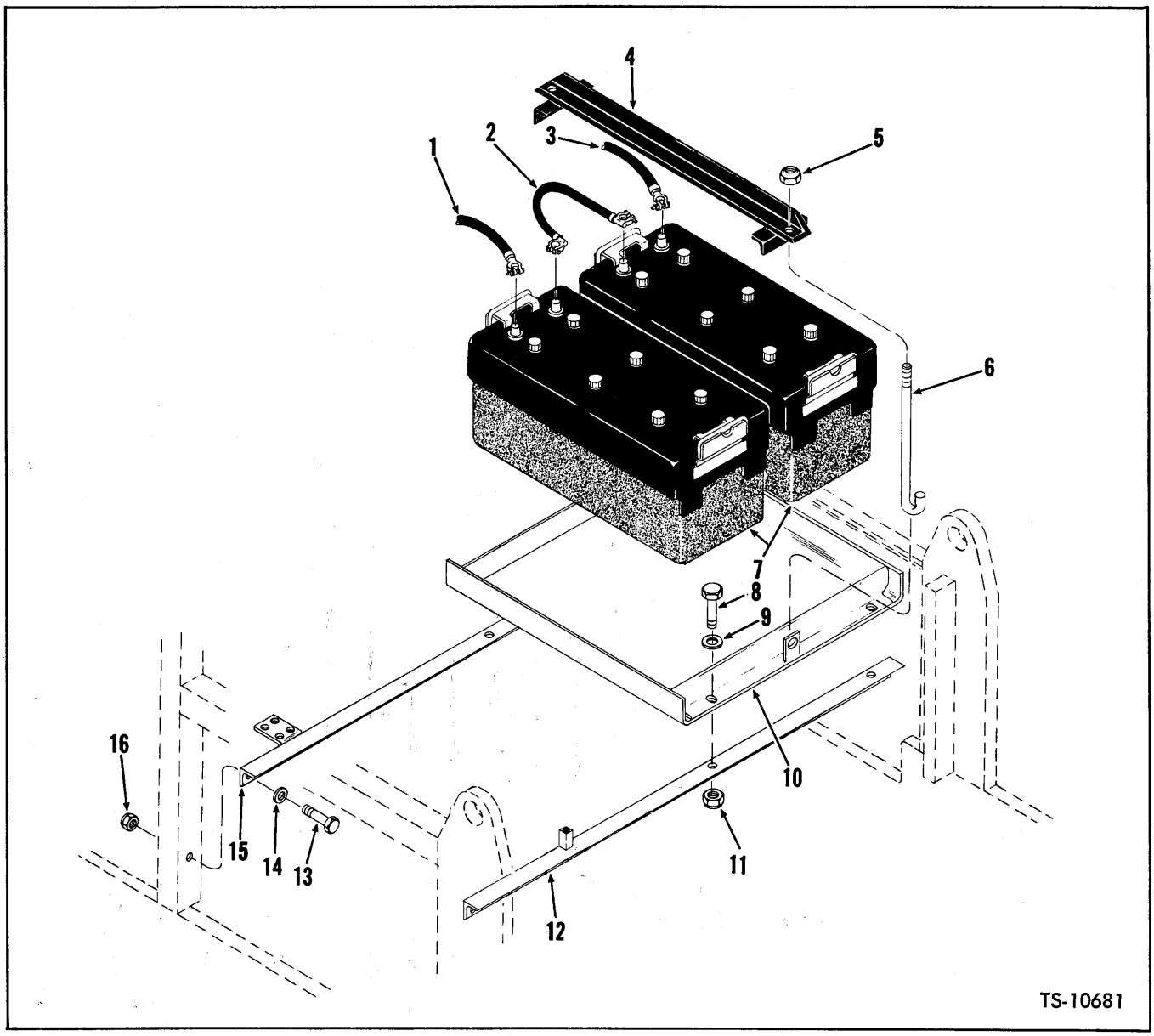

BATTERIES, BATTERY BOX & HOLD DOWN

Item No.	Part No.	Description	No. Req'd.
1	1547130	CABLE, Battery to Ground	1
2	529359	CABLE, Battery to Battery	1
3	1510729	CABLE, Battery to Starter	1
4	566629	HOLD DOWN, Battery	1
5	17D-2	NUT, Battery Hold Down	2
6	585592	BOLT, Battery Hold Down	2
7	1671369	BATTERY	2
8	24C-824	BOLT, Battery Box to Support Angle	4
9	635682	WASHER, Battery Box to Support	4
10	1537839	BOX, Battery	1
11	18D-08	NUT, Battery Box to Support	4
12	1543451	ANGLE, Support — Front	1
13	24C-824	BOLT, Support Angle to Frame	4
14	635682	WASHER, Support Angle to Frame	3
15	1537859	ANGLE, Support — Rear	1
16	18D-08	NUT, Support Angle to Frame	4

WHEN ORDERING PARTS, ALWAYS STATE MODEL AND SERIAL NO. OF MACHINE

https://truckmanualshub.com/

ENGINE ACCESSORIES — CUMMINS

All orders for engine assembly or components thereof should be placed with the nearest Cummins Engine Distributor. Always give model specifications and serial number of the engine when ordering parts. This data will be found on nameplate attached to the side of the engine.

ENGINE ACCESSORIES

Item No.	Part No.	Description	No. Req'd.
1	———	*ALTERNATOR — 24V. (D.R. — 1117229, Cummins 203179)	1
2	———	*STARTER ASSY — 24V. (D.R. — 1113850, Cummins 135162)	1
3	———	*AIR COMPRESSOR (Cummins 196474)	1
4	———	*GOVERNOR, Air Compressor (Cummins #189236), (B.W. #277468)	1
5	———	*SOLENOID (Cummins 143795)	1
6	———	*CORROSION RESISTOR (Cummins 132716)	1

FAN CUMMINS 157333 MOTORTEIL
CT. H. WIDLAG CUMMINS GROSS GERAU 7/5/73

ENGINE ACCESSORY DRIVE BELTS

Item No.	Part No.	Description	No. Req'd.
7	948812	*BELT SET, Alternator Drive (Matched Set of 2)	1
8	948813	*BELT SET, Fan Drive (Matched Set of 3)	1
9	947387	*BELT, Water Pump (Single Belt)	1

*NOTE: The above listed accessory items are serviced by the engine manufacturer. Specifications on these items are subject to change without notice. It is, therefore, recommended that complete model, specifications and serial number of the engine be provided to your Cummins Engine Distributor when ordering these parts.

REPLACEMENT FILTER ELEMENTS

Item No.	Part No.	Description	No. Req'd.
10	946857	ELEMENT, Air Cleaner	1
11	945350	ELEMENT, Engine By Pass Filter	2
12	946010	ELEMENT, Engine Fuel Filter	1
13	215502	ELEMENT, Trans. & Torque Converter Hydraulic System	2
14	1530600	ELEMENT KIT, Hydraulic Reservoir Pressure Filter	2
15	1532445	FILTER ASSY, Hydraulic Reservoir Suction	1

WHEN ORDERING PARTS, ALWAYS STATE MODEL AND SERIAL NO. OF MACHINE

https://truckmanualshub.com/

ENGINE & ACCESSORIES — CUMMINS

All orders for engine assembly or components thereof should be placed with the nearest Cummins Engine Distributor. Always give model, specifications and serial number of the engine when ordering parts. This data will be found on the nameplate attached to the side of the engine.

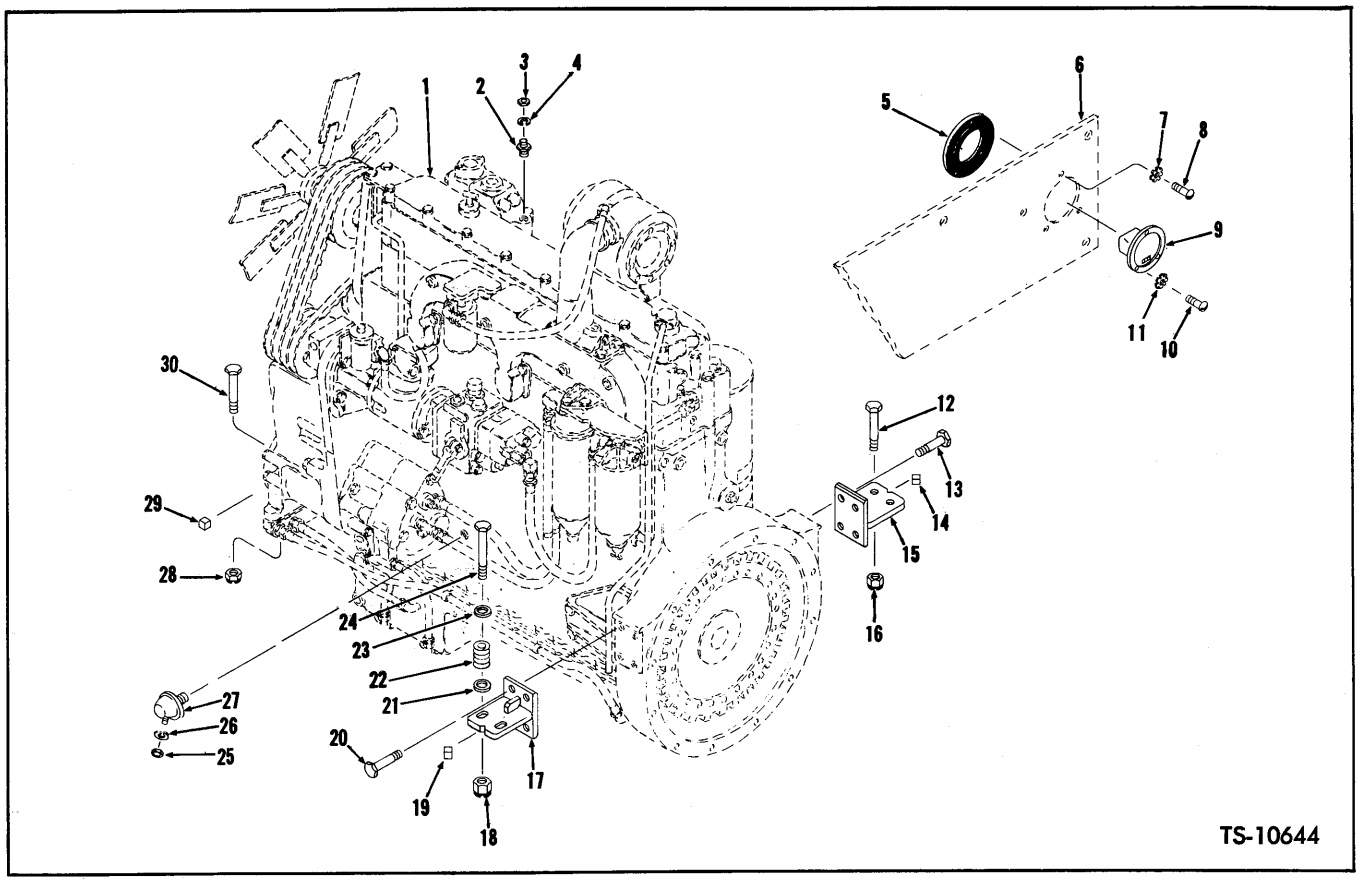

ENGINE ACCESSORIES & SUPPORT PARTS

Item No.	Part No.	Description	No. Req'd.
1	———	ENGINE — See Engine Parts Manual	—
2	551323	SENDER UNIT, Engine Temperature	1
3	14D-10	NUT, Sender Unit	1
4	12E-10	LKWSHR, Sender Unit	1
5	551251	DAMPENER, Hourmeter Vibration	1
6	———	PLATE, Air Cleaner Mounting — See Index	—
7	12E-6	LKWSHR, Vibration Dampener Mounting	3
8	85G-608	SCREW, Vibration Dampener Mounting	3
9	1801087	HOURMETER (Inc. 10 & 11)	1
10	85G-608	SCREW, Hourmeter to Dampener	3
11	12E-6	LKWSHR, Hourmeter to Dampener	3
12	24C-1256	BOLT, Support to Frame — L.H.	2
13	8C-1028	BOLT, Support to Engine	4
14	608241	FLAT, Rectangle (Welded to Frame)	1
15	1521079	SUPPORT, Engine — L.H.	1
16	68D-12	NUT, Support to Frame	2
17	1521080	SUPPORT, Engine — R.H.	1
18	68D-12	NUT, Support to Frame	2
19	608241	FLAT, Rectangle (Welded to Frame)	1
20	8C-1028	BOLT, Support to Engine	4
21	616809	WASHER, Support to Frame — R.H.	2
22	570419	SPRING, Support to Frame — R.H.	2
23	616809	WASHER, Support to Frame — R.H.	2
24	24C-1288	BOLT, Support to Frame — R.H.	2
25	14D-10	NUT, Sender Unit	1
26	12E-10	LKWSHR, Sender Unit	1
27	1534135	SENDER UNIT, Engine Oil Pressure	1
28	18D-10	NUT, Engine to Frame — Rear	2
29	608241	FLAT, Rectangular (Welded to Frame)	2
30	24C-1052	BOLT, Engine to Frame — Rear	2

WHEN ORDERING PARTS, ALWAYS STATE MODEL AND SERIAL NO. OF MACHINE

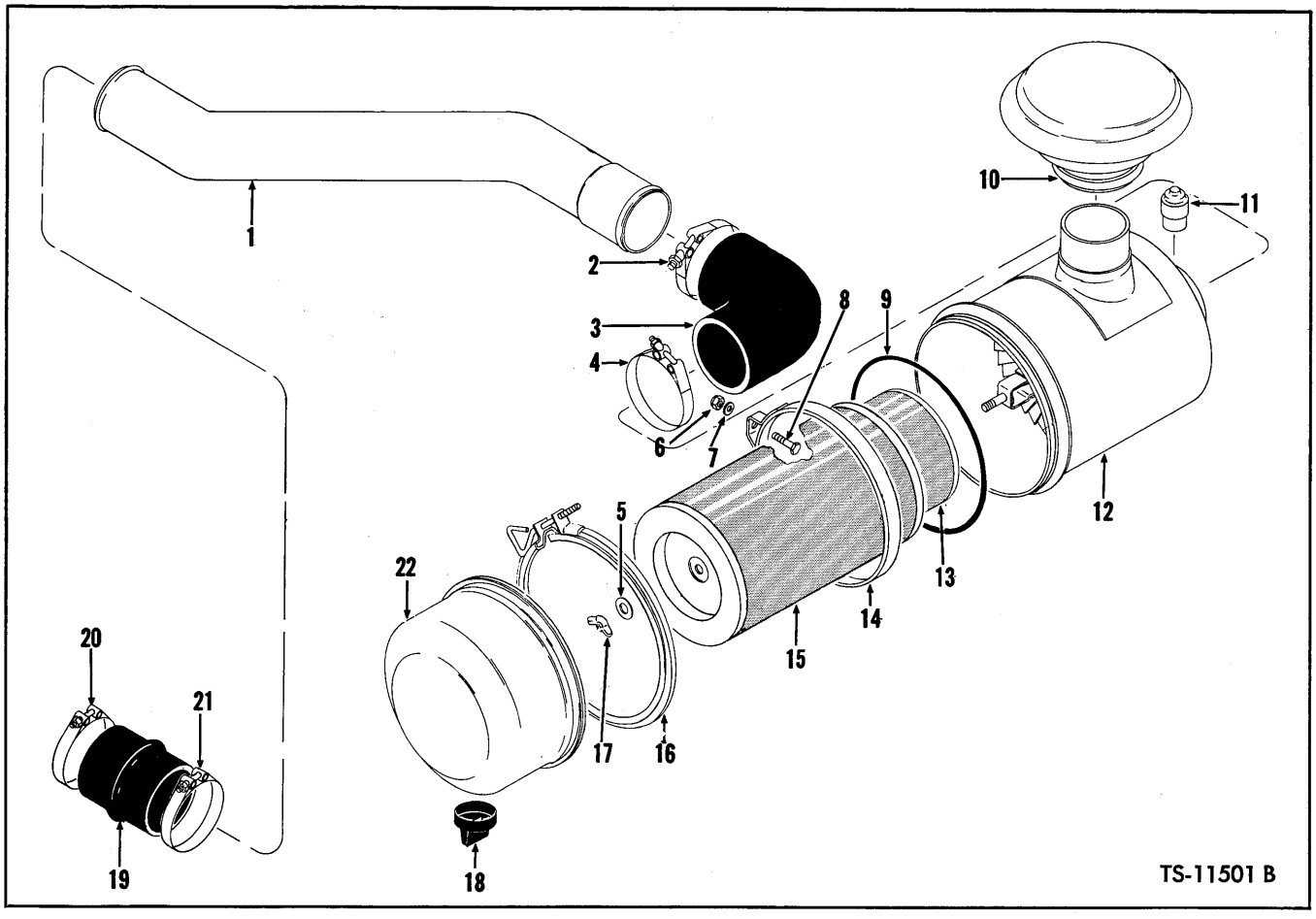

ENGINE AIR CLEANER & CONNECTIONS

Item No.	Part No.	Description	No. Req'd.
1	1549414	TUBE	1
2	1500793	CLAMP, Hose	1
3	1529315	HOSE, Intake	1
4	1500793	CLAMP, Hose	1
5	3292704	GASKET, Wing Nut	2
6	18D-05	NUT, Air Cleaner Mounting	4
7	656672	WASHER, Air Cleaner Mounting	4
8	24C-620	BOLT, Air Cleaner Mounting	4
9	944494	O-RING, Cup to Body	1
10	1529623	CAP, Air Cleaner	1
11	1529625	INDICATOR, Service	1
12		*Air Cleaner Assembly*	
12A	1529622	**For Serial Group "A" (Inc. 5, 9, 14, 15, 16, 17, 18, 22)	1
12B	1513874	For Serial Group "B" (Inc. 5, 9, 13, 14, 15, 16, 17, 18, 22)	1
13	949363	*ELEMENT, Inner	1
14	1529624	BAND, Air Cleaner Mounting	2
15	946857	ELEMENT, Outer	1
16	945021	CLAMP, Cup to Body	1
17	886526	NUT, Wing	2
18	946860	VALVE, Vacuator	1
19	1522454	HOSE, Intake	1
20	540797	CLAMP, Hose	1
21	1500793	CLAMP, Hose	1
22	946860	CUP, Air Cleaner	1

**NOTE: For complete replacement use 1513874.
*NOTE: Used on Serial Group "B" Only.
Serial Group "A": 425A101 thru 999.
Serial Group "B": 425B101 & After.

WHEN ORDERING PARTS, ALWAYS STATE MODEL AND SERIAL NO. OF MACHINE

https://truckmanualshub.com/

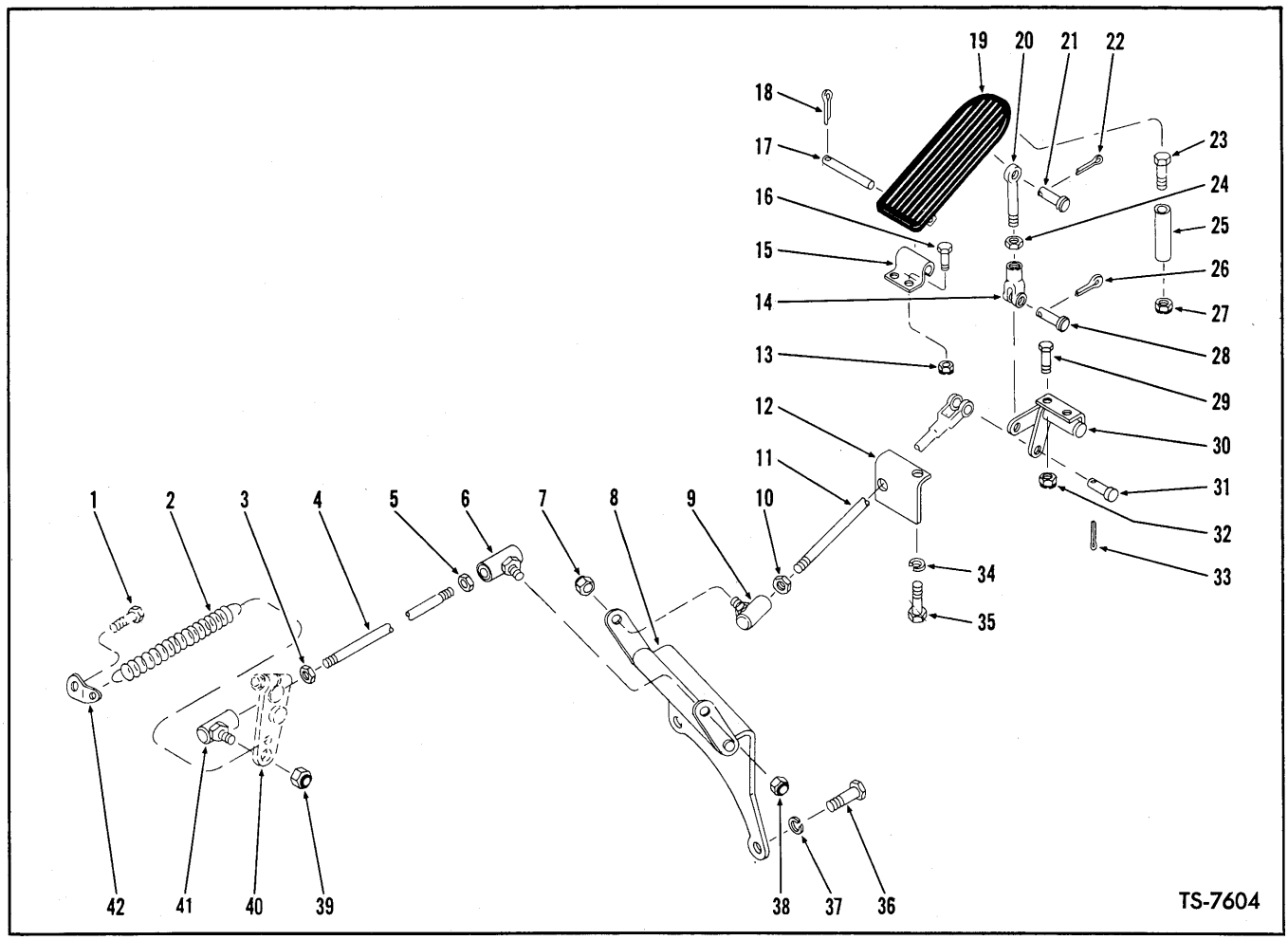

ENGINE CONTROLS

Item No.	Part No.	Description	No. Req'd.
1	———	BOLT — Furnished With Engine	—
2	551014	SPRING, Accelerator Rod Return	1
3	8D-05	NUT, Ball Joint Jam	1
4	1548294	ROD, Engine to Bellcrank (Inc. 3, 5, 6, 41)	1
5	8D-05	NUT, Ball Joint Jam	1
6	1301361	BALL JOINT	1
7	66D-05	NUT, Ball Joint to Bellcrank	1
8	1548747	BELLCRANK	1
9	1301361	BALL JOINT	1
10	8D-05	NUT, Ball Joint Jam	1
11	1543307	ROD, Accelerator (Inc. 9, 10, 12)	1
12	569761	GUIDE, Accelerator Rod	1
13	18D-04	NUT, Accelerator Pedal Bracket to Floorboard	2
14	2J-4200	CLEVIS, Rod to Bellcrank	1
15	1544695	BRACKET, Accelerator Pedal Pivot	1
16	24C-416	BOLT, Accelerator Pedal Bracket to Floorboard	2
17	623762	PIN, Pedal to Bracket	1
18	1F-316	COTTER, Pedal Pin	1
19	623829	PEDAL, Accelerator	1
20	550619	ROD, Pedal to Bellcrank	1
21	4F-04051	PIN, Pedal to Rod Clevis	1
22	1F-208	COTTER, Clevis Pin	1
23	24C-448	BOLT, Stop to Floorboard	1
24	8D-04	NUT, Rod Jam	1
25	551016	STOP, Accelerator Pedal	1
26	1F-208	COTTER, Clevis Pin	1
27	18D-04	NUT, Stop to Floorboard	1
28	4F-04051	PIN, Clevis to Bellcrank	1
29	24C-416	BOLT, Bellcrank to Floorboard	2
30	1543304	BELLCRANK	1
31	4F-04051	PIN, Accelerator Rod to Bellcrank	1
32	18D-04	NUT, Bellcrank to Floorboard	2
33	1F-208	COTTER, Bellcrank Pin	1
34	4E-06	LKWSHR, Guide to Cockpit	1
35	24C-616	BOLT, Guide to Cockpit	1
36	23C-728	BOLT, Bellcrank to Engine	2
37	4E-07	LKWSHR, Bellcrank to Engine	2
38	18D-05	NUT, Ball Joint to Bellcrank	1
39	18D-05	NUT, Ball Joint to Governor Arm	1
40	———	ARM, Governor — See Engine Parts Manual	—
41	1301361	BALL JOINT, Rod to Governor Arm	1
42	551778	ANCHOR, Return Spring to Engine	1

WHEN ORDERING PARTS, ALWAYS STATE MODEL AND SERIAL NO. OF MACHINE

https://truckmanualshub.com/

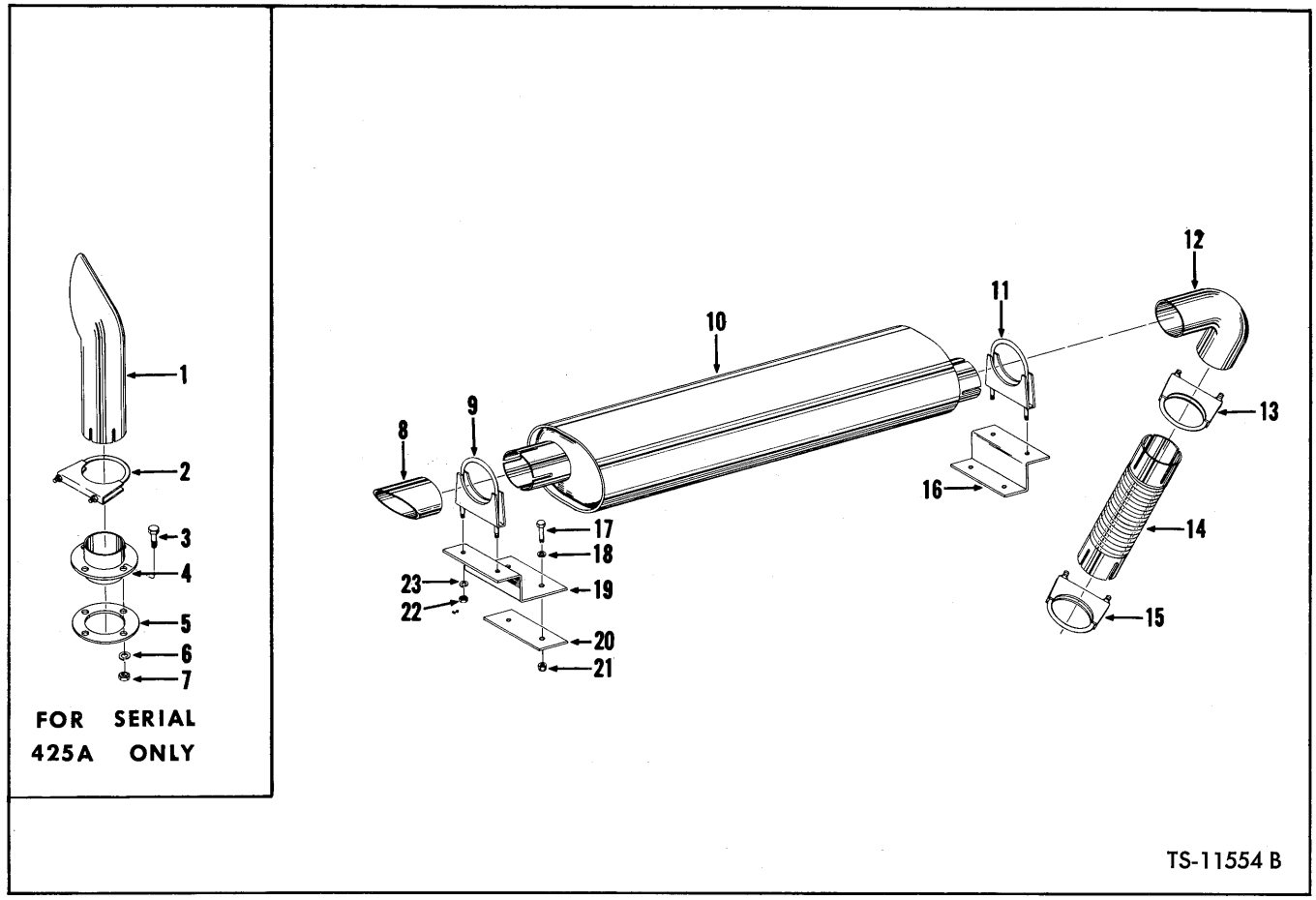

ENGINE EXHAUST SYSTEM

Item No.	Part No.	Description	No. Req'd.
1	1529635	*PIPE, Tail	1
2	1500453	*CLAMP, Pipe to Pipe	1
3	17C-620	*BOLT, Exhaust Pipe & Flange to Hood	4
4	1540793	*PIPE, Exhaust	1
5	1524162	*FLANGE, Exhaust	1
6	4E-06	*LKWSHR, Exhaust Pipe & Flange to Hood	4
7	15D-06	*NUT, Exhaust Pipe & Flange to Hood	4
8	1543638	PIPE, Tail	1
9	1529986	CLAMP, Pipe to Muffler (Inc. 22, 23)	1
10	1510165	MUFFLER ASSY	1
11	1529986	CLAMP, Pipe to Muffler	1
12	1511798	PIPE, Exhaust	1
13	1529986	CLAMP, Pipe to Pipe	1
14	1510686	TUBE, Exhaust Flex	1
15	1529986	CLAMP, Tube to Blower	1
16	1511800	BRACKET, Muffler Mounting	1
17	24C-620	BOLT, Bracket to Hood	4
18	656672	WASHER, Bracket to Hood	4
19	1511801	BRACKET, Muffler Mounting	1
20	1511799	PLATE, Bracket Support	2
21	18D-08	NUT, Bracket to Hood	4
22	———	§See Item 9	—
23	———	§See Item 9	—

*NOTE: For Serial: 425A101 thru 999 Only.
§Not Sold Separately

WHEN ORDERING PARTS, ALWAYS STATE MODEL AND SERIAL NO. OF MACHINE

https://truckmanualshub.com/

https://truckmanualshub.com/

"F" GROUP

CONTENTS

Front and Rear Frame and Cradle ..... F 3

Fuel Tank, Step and Fuel Lines ..... F 6

https://truckmanualshub.com/

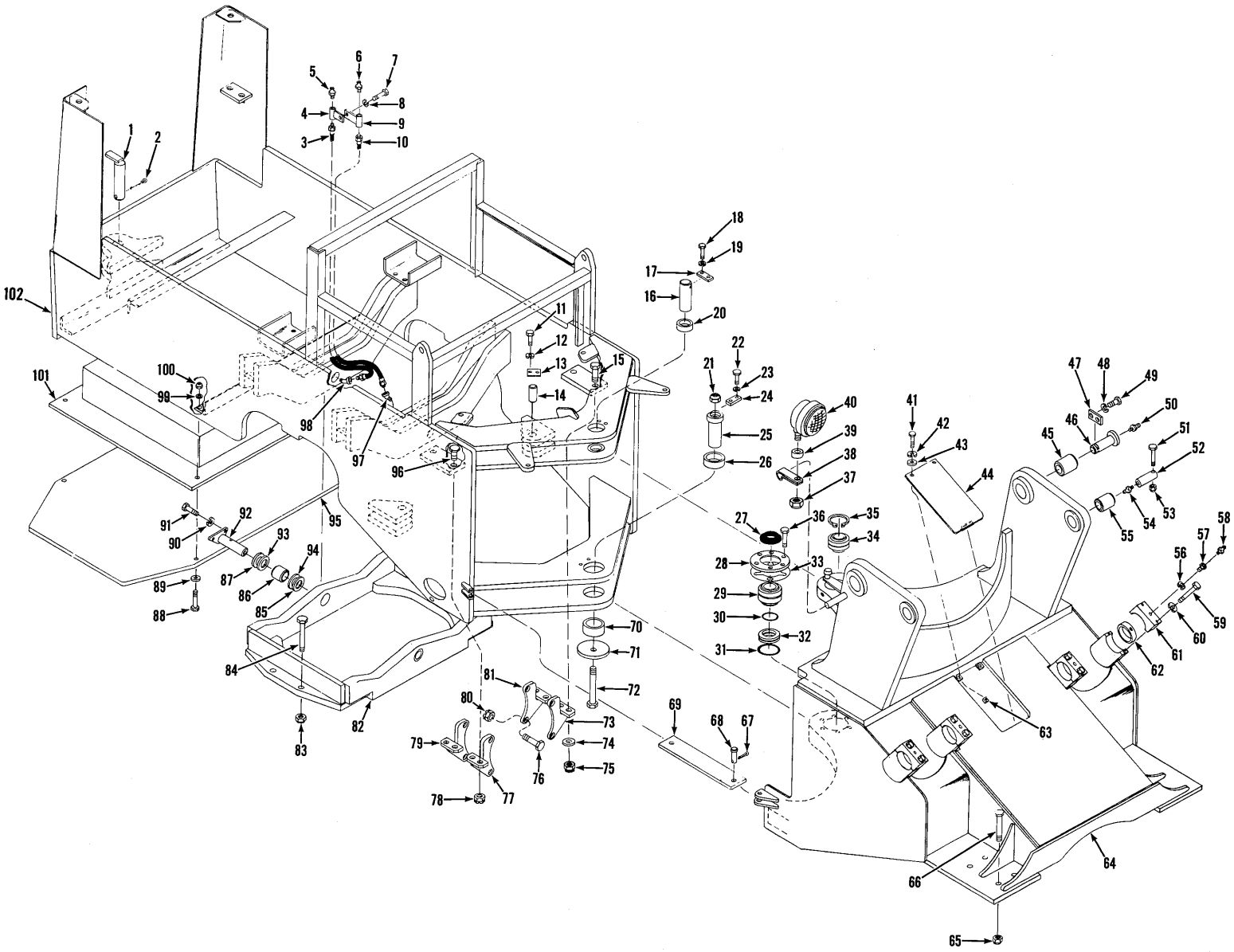

FRONT AND REAR FRAME AND CRADLE

TS-10658

https://truckmanualshub.com/

FRONT & REAR FRAME & CRADLE

Item No.	Part No.	Description	No. Req'd.
1	1506818	PIN, Drawbar	1
2	1F-1252	COTTER, Drawbar Pin	1
3	549262	HOSE, Fitting to Cradle Pin	1
4	1504336	COUPLING, Hose Mounting	1
5	10H-25	FITTING, Cradle Pin Grease	1
6	10H-25	FITTING, Cradle Pin Grease	1
7	24C-620	BOLT, Coupling to Frame Block	1
8	4E-06	LKWSHR, Coupling to Frame Block	1
9	1504336	COUPLING, Hose Mounting	1
10	549262	HOSE, Fitting to Cradle Pin	1
11	24C-820	BOLT, Lockplate to Frame	8
12	4E-08	LKWSHR, Lockplate to Frame	8
13	1507920	LOCKPLATE, Steer Pin Retaining	4
14	1545165	PIN, Steering Cylinder to Frame	4
15	24C-1676	BOLT, Trans. Bracket to Frame — L.H.	2
16	1508161	PIN, Upper Hinge	1
17	1548429	LOCKPLATE, Upper Hinge Pin	1
18	24C-1224	BOLT, Lockplate to Frame	2
19	4E-12	LKWSHR, Lockplate to Frame	2
20	1525299	BUSHING, Upper Pivot	2
21	18D-24	NUT, Lower Hinge Pin	1
22	24C-820	BOLT, Lockplate to Lower Hinge	2
23	4E-08	LKWSHR, Lockplate to Lower Hinge	2
24	1538866	LOCKPLATE, Lower Hinge Pin Ret.	1
25	1538754	PIN, Lower Hinge	1
25A	10H-25	†FITTING, Pin Grease	2
26	1538753	BUSHING, Lower Pivot	1
27	1657109	WIPER, Lower Hinge Pin	1
28	1538775	CAP, Lower Hinge Pin	1
29	1538842	BUSHING, Lower Hinge Pin	1
29A	10H-25	†FITTING, Lower Pivot Grease	1
30	25K-40416	O-RING, Lower Hinge Pin	1
31	25K-~~40502~~ 40524	O-RING, Lower Hinge Pin	1
32	561088	SPACER, Lower Hinge Pin	1
33	1538850	‡SHIM, Lower Hinge Pin	—
34	561085	BUSHING, Upper Hinge Pin	1
34A	10H-25	†FITTING, Upper Hinge Pin	1
35	743848	RING, Upper Bushing Retaining	1
36	24C-1436	BOLT, Retaining Plate to Frame	6
37	18D-08	NUT, Head Lamp to Clamp	2
38	1522201	CLAMP, Head Lamp Mounting	2
39	652448	SPACER, Head Lamp Mounting	2
40	548088	LAMP ASSY, Head (Inc. 40A, 40B)	2
40A	551244	†SEALED UNIT, Head Lamp	2
40B	944872	†RETAINER, Head Lamp	2
41	23C-620	BOLT, Cover to Front Frame	2
42	4E-06	LKWSHR, Cover to Front Frame	2
43	656672	WASHER, Cover to Front Frame	2
44	1544197	COVER, Front Frame	1
45	1546608	BUSHING, Boom Support	2
46		*PIN, Boom to Frame*	
46A	1510995	For Serial Group "A"	2
46B	1514224	For Serial Group "B"	2
47	1544087	LOCKPLATE, Pin Retaining	4
48	4E-08	LKWSHR, Lockplate to Frame	8
49	24C-820	BOLT, Lockplate to Frame	8
50	10H-25	FITTING, Pin Grease	2
51	24C-12112	BOLT, Pin Retaining	2

†Not Illustrated
‡As Required
Serial Group "A" — 425A101 thru 999.
Serial Group "B" — 425B101 & After.

WHEN ORDERING PARTS, ALWAYS STATE MODEL AND SERIAL NO. OF MACHINE

https://truckmanualshub.com/

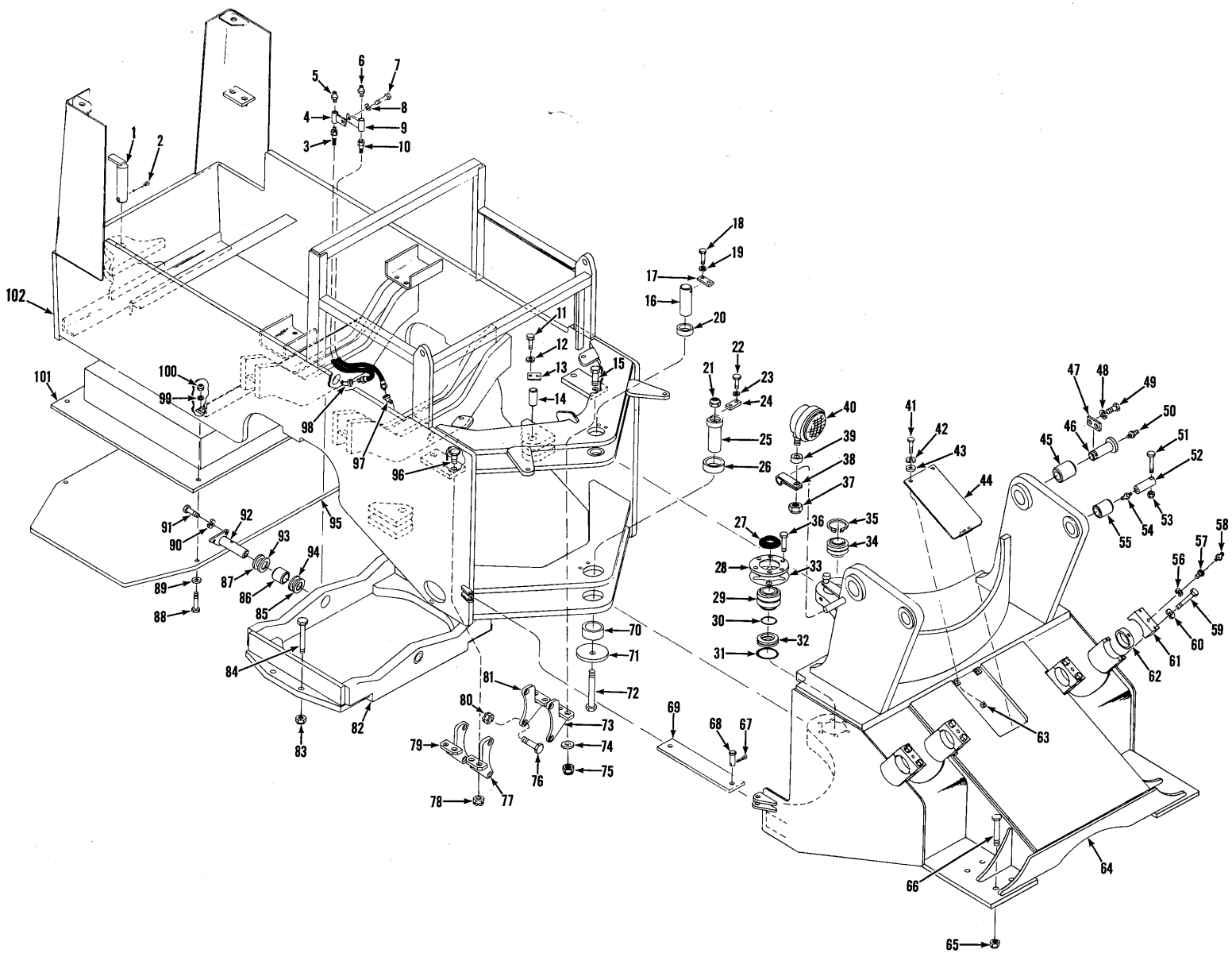

FRONT AND REAR FRAME AND CRADLE

TS-10658

https://truckmanualshub.com/

FRONT & REAR FRAME & CRADLE (Continued)

Item No.	Part No.	Description	No. Req'd.
52		*PIN, Bucket Cylinder to Frame*	
52A	1539411	For Serial Group "A"	2
52B	1514223	For Serial Group "B"	2
53	18D-12	NUT, Pin Retaining	2
54	10H-25	FITTING, Pin Grease	2
55		*BUSHING, Bucket Cylinder*	
55A	1538599	For Serial Group "A"	2
55B	1522728	For Serial Group "B"	2
56	4E-12	LKWSHR, Tapped Bolt	4
57	1548630	BOLT, Tapped	4
58	10H-25	FITTING, Cylinder Grease	4
59	24C-1696	BOLT, Cap to Frame	8
60	4E-16	LKWSHR, Cap to Frame	8
61	1538605	BLOCK, Boom Cylinder Mounting	4
62	1538596	BUSHING, Boom Cylinder Mounting	4
63	572729	CAGED NUT, Cover Mounting	2
64		*FRONT FRAME (Inc. 45, 55, 59, 60, 61)*	
64A	1538646	For Serial Group "A"	1
64B	1512437	For Serial Group "B"	1
65	18D-24	NUT, Axle Mounting X	8
66	1510534	BOLT, Axle Mounting X	8
67	1F-532	COTTER, Clevis Pin	2
68	1533279	PIN, Clevis	2
69	1538388	BAR, Safety Link	1
70	1522162	BUSHING, Lower Pivot	1
71	1544069	PLATE, Bushing Retainer	1
72	24C-24192	BOLT, Lower Hinge Pin	1
73	1537570	BRACKET, Trans. Mounting — L.H.	1
74	539404	WASHER, Transmission to Frame	2
75	68D-16	NUT, Bracket to Frame — L.H.	2
76	24C-1664	BOLT, Bracket to Transmission	7
76A	24C-1648	†BOLT, Bracket to Transmission	1
77	1537569	BRACKET, Trans. Mount — R.H.	1
78	68D-16	NUT, Bracket to Frame — R.H.	2
79	1537569	BRACKET, Trans. Mount — R.H.	1
80	68D-16	NUT, Bracket to Transmission	7
80A	18D-16	†NUT, Bracket to Transmission	1
81	1537570	BRACKET, Trans. Mount — L.H.	1
82	1538326	CRADLE ASSY, Rear Axle (Inc. 86)	1
83	18D-24	NUT, Axle to Cradle	8
84	1510533	BOLT, Axle to Cradle	8
85	1508675	‡SHIM, Cradle Mounting — 1/16"	—
86	1505775	BUSHING, Cradle Mounting	2
87	1508675	‡SHIM, Cradle Mounting — 1/16"	—
88	24C-2096	BOLT, Service Platform to Frame	4
89	652847	WASHER, Service Platform to Frame	4
90	4E-12	LKWSHR, Pin to Cradle	4
91	24C-1228	BOLT, Pin to Cradle	4
92	1508588	PIN, Axle Cradle Pivot	2
93	561375	‡SHIM, Cradle Mounting — 1/8"	—
94	561375	‡SHIM, Cradle Mounting — 1/8"	—
95	1547887	PLATFORM, Service	1
96	24C-1672	BOLT, Bracket to Frame — R.H.	2
97	26F-1	FITTING, Hose to Cradle Pin	1
98	26F-1	FITTING, Hose to Cradle Pin	1
99	652847	WASHER, Service Platform to Frame	4
100	18D-20	NUT, Service Platform to Frame	4
101	———	OMIT, Not Used This Application	—
102		*REAR FRAME ASSY (Inc. 20, 26, 70)*	
102A	1538571	For Serial Group "A"	1
102B	1514406	For Serial Group "B"	1

†Not Illustrated
‡As Required
Serial Group "A" — 425A101 thru 999.
Serial Group "B" — 425B101 & After.

WHEN ORDERING PARTS, ALWAYS STATE MODEL AND SERIAL NO. OF MACHINE

https://truckmanualshub.com/

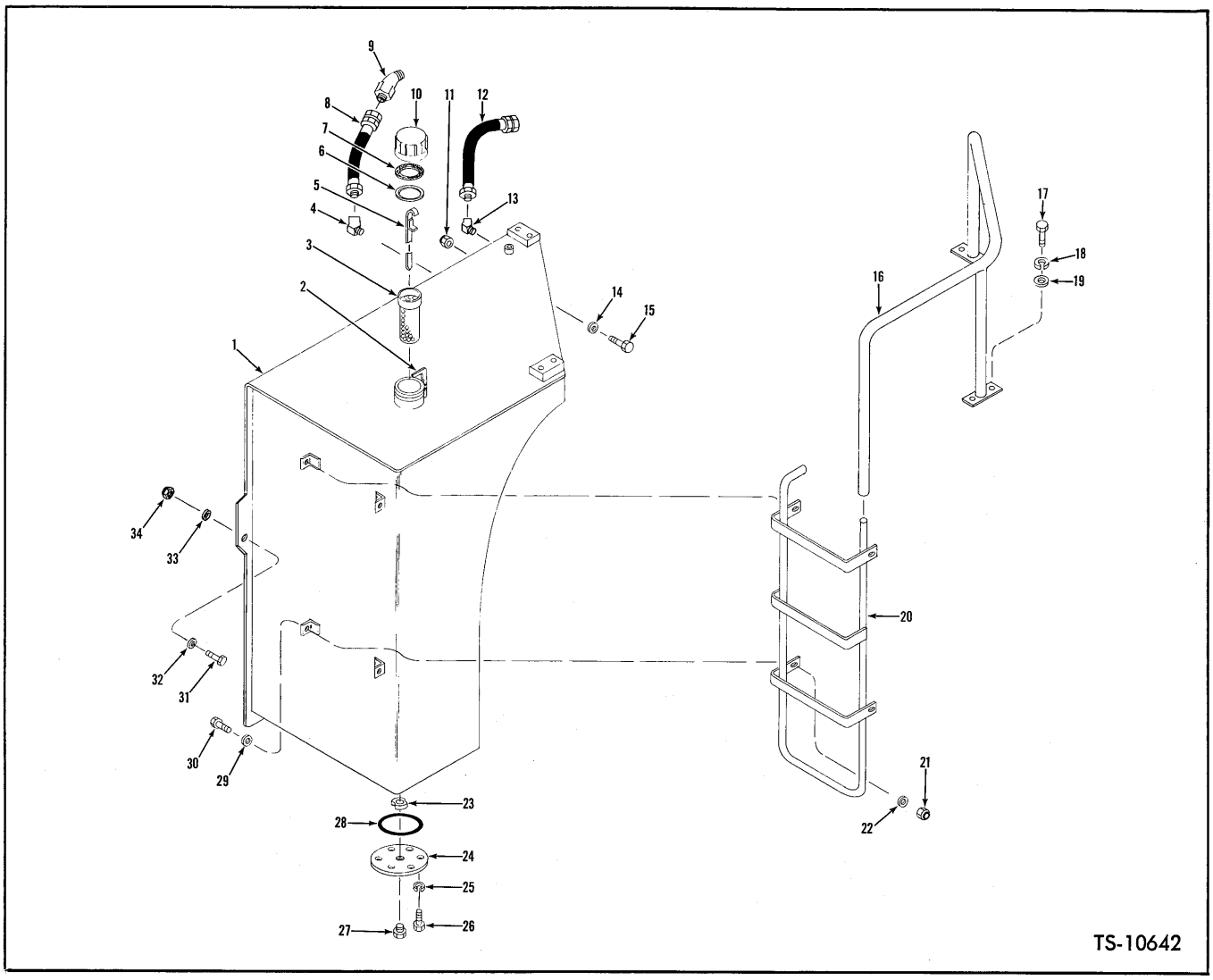

FUEL TANK, STEP & FUEL LINES

Item No.	Part No.	Description	No. Req'd.
1	1544786	TANK, Fuel (Inc. 2, 2A)	1
2	1509025	LATCH, Cap	1
2A	1H-414	†RIVET, Latch	1
3	943957	SCREEN, Fuel Tank	1
4	31F-4	ELBOW, Hose to Fuel Tank	1
5	569497	DIPSTICK, Fuel Tank	1
6	946954	PLATE, Gasket Back-Up	1
7	946953	GASKET, Fuel Cap	1
8	1543008	HOSE, Fuel Suction	1
9	17K-7	ELBOW, Hose to Filter (Inc. 9A)	1
9A	91F-7	†O-RING, Elbow	1
10	1558644	CAP, Filler (Inc. 6, 7)	1
11	18D-12	NUT, Tank to Frame	2
12	1543009	HOSE, Fuel Return	1
13	31F-3	ELBOW, Hose to Fuel Tank	1
14	616809	WASHER, Tank to Frame Angle	4
15	24C-1260	BOLT, Tank to Frame Angle	2
16	1544780	HAND RAIL, L.H.	1
17	24C-824	BOLT, Hand Rail to Fuel Tank	4
18	4E-08	LKWSHR, Hand Rail to Fuel Tank	4
19	619029	WASHER, Hand Rail to Fuel Tank	4
20	1544777	STEP — L.H.	1
21	18D-08	NUT, Step to Fuel Tank	4
22	619029	WASHER, Step to Fuel Tank	4
23	525293	MAGNET, Fuel Tank	1
24	587613	PLATE, Inspection	1
25	4E-06	LKWSHR, Inspection Plate to Tank	6
26	24C-612	BOLT, Inspection Plate to Tank	6
27	40K-16	PLUG, Inspection Plate	1
28	25K-40428	O-RING, Inspection Plate	1
29	619029	WASHER, Step to Tank	4
30	24C-828	BOLT, Step to Tank	4
31	24C-1244	BOLT, Tank to Angle	1
32	616809	WASHER, Tank to Angle	1
33	616809	WASHER, Tank to Angle	1
34	18D-10	NUT, Tank to Angle	1

†Not Illustrated

WHEN ORDERING PARTS, ALWAYS STATE MODEL AND SERIAL NO. OF MACHINE

"H" GROUP

CONTENTS

Hood, Shrouds and Grille ..... H 3

Hydraulic Group:

- Hydraulic Accumulator Assembly ..... H 4
- Hydraulic Oil Reservoir, Filters and Step ..... H 5
- Hydraulic System — Bucket and Boom ..... H 7
- Hydraulic System — Steering ..... H 13
- Hydraulic System — Transmission and Torque Converter ..... H 15

https://truckmanualshub.com/

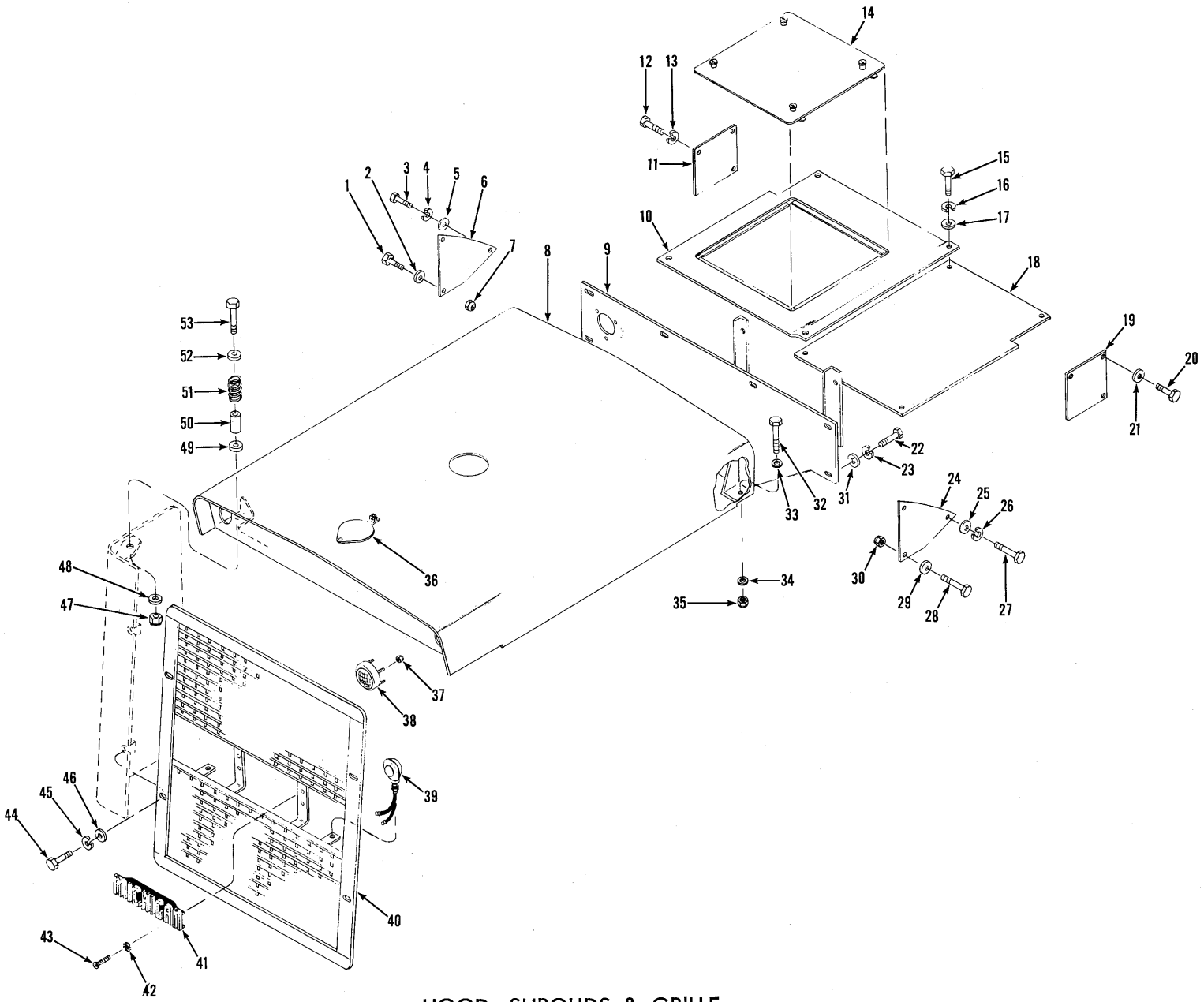

HOOD, SHROUDS & GRILLE

TS-10668

https://truckmanualshub.com/

HOOD, SHROUDS & GRILLE

Item No.	Part No.	Description	No. Req'd.
1	24C-624	BOLT, Side Plate to Frame	2
2	656672	WASHER, Side Plate to Frame	2
3	24C-616	BOLT, Side Plate to Frame	1
4	4E-06	LKWSHR, Side Plate to Frame	1
5	656672	WASHER, Side Plate to Frame	1
6	1537776	PLATE, Side	1
7	18D-06	NUT, Side Plate to Frame	2
8		*HOOD (Inc. 36, 36A)*	
8A	1540843	For Serial Group "A"	1
8B	1514300	For Serial Group "B"	1
9		*AIR CLEANER MOUNTING PLATE*	
9A	1543323	For Serial Group "A"	1
9B	1514302	For Serial Group "B"	1
10	1543327	PLATE, L.H. Cover	1
11	569763	PLATE, Cockpit Side	1
12	23C-616	BOLT, Plate to Cockpit	3
13	4E-06	LKWSHR, Plate to Cockpit	3
13A	656672	†WASHER, Plate to Cockpit	3
14	1543324	DOOR, Battery (Inc. 14A)	1
14A	1698754	†LATCH, Door	4
15	23C-620	BOLT, Cover Plate to Frame	6
16	4E-06	LKWSHR, Cover Plate to Frame	6
17	656672	WASHER, Cover Plate to Frame	6
18	1543326	PLATE, R.H. Cover	1
19	569763	PLATE, Cockpit Side	1
20	23C-616	BOLT, Plate to Cockpit	3
21	4E-06	LKWSHR, Plate to Cockpit	3
21A	656672	†WASHER, Plate to Cockpit	3
22	23C-620	BOLT, Mounting Plate to Frame	6
23	4E-06	LKWSHR, Mounting Plate to Frame	6
24	1537776	PLATE, Side	1
25	656672	WASHER, Side Plate to Frame	1
26	4E-06	LKWSHR, Side Plate to Frame	1
27	24C-616	BOLT, Side Plate to Frame	1
28	24C-624	BOLT, Side Plate to Frame	2
29	656672	WASHER, Side Plate to Frame	2
30	18D-06	NUT, Side Plate to Frame	2
31	656672	WASHER, Mounting Plate to Frame	6
32	24C-624	BOLT, Hood to Frame	2
33	656672	WASHER, Hood to Frame	2
34	656672	WASHER, Hood to Frame	2
35	18D-06	NUT, Hood to Frame	2
36	1544448	PLATE, Cover	1
36A	1H-508	†RIVET, Cover Plate	1
37	50D-10	NUT, Lamp to Hood	6
38	582057	LAMP ASSY, Back-Up (Inc. 38A, 38B)	2
38A	551244	†SEALED UNIT, Lamp	2
38B	944977	†FRAME & RETAINER	2
39	1545132	LAMP ASSY, Stop & Tail (Inc. 39A)	2
39A	878645	†BULB, Stop & Tail Lamp	2
40	1540905	GRILLE	1
41	535649	NAMEPLATE — "MICHIGAN"	1
42	20E-04	LKWSHR, Nameplate to Grille	4
43	7G-418	SCREW, Nameplate to Grille	4
44	24C-828	BOLT, Grille to Frame	4
45	4E-08	LKWSHR, Grille to Frame	4
46	635682	WASHER, Grille to Frame	4
47	18D-06	NUT, Hood to Frame	2
48	656672	WASHER, Hood to Frame	2
49	1528537	SPACER, Hood to Frame	2
50	1528537	SPACER, Hood to Frame	2
51	500021	SPRING, Hood to Frame	2
52	664962	WASHER, Hood to Frame	2
53	24C-644	BOLT, Hood to Frame	2

†Not Illustrated
Serial Group "A" — 425A101 thru 999.
Serial Group "B" — 425B101 & After.

WHEN ORDERING PARTS, ALWAYS STATE MODEL AND SERIAL NO. OF MACHINE

https://truckmanualshub.com/

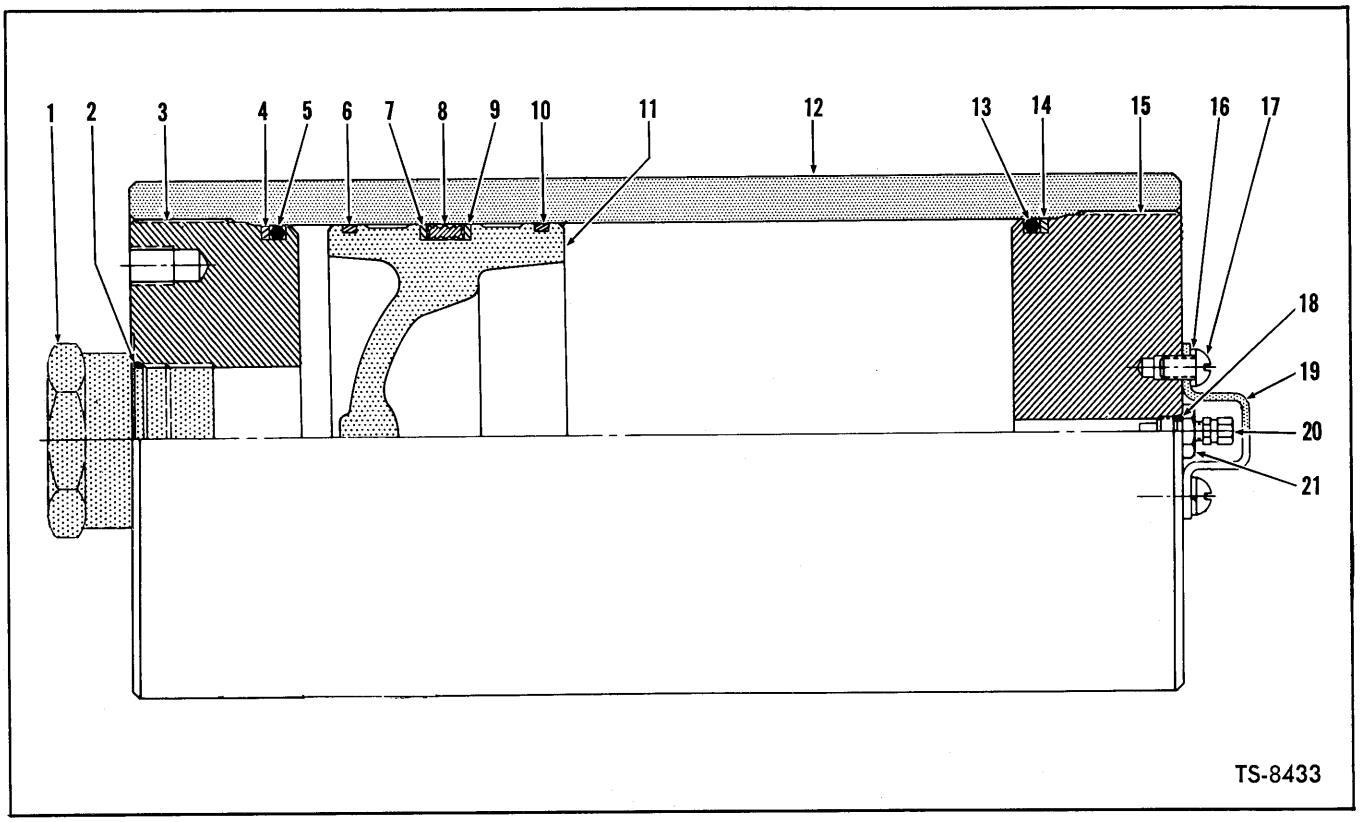

CAUTION

This is a Gas Pressurized System

Do not disconnect any part of the system without first relieving hydraulic system pressure.

Relieving Hydraulic System Pressure

Position boom and bucket mechanism so that bucket is on ground. Shut down engine. Loosen hydraulic reservoir cap slowly to relieve pressure in reservoir. Actuate boom and bucket control levers both fore and aft, holding levers in fore and aft position for several seconds. Repeat this operation several times. Retighten res ervoir cap.

Before attempting to service components of accumulator, release gas by unscrewing gas valve until gas begins to escape through safety hole. When pressure is relieved, remove gas valve.

HYDRAULIC ACCUMULATOR ASSEMBLY

Item No.	Part No.	Description	No. Req'd.
A	1512856	ACCUMULATOR ASSY (Inc. 1 thru 21A)	1
B	949287	REPAIR KIT, Accumulator (Inc. 2, 4 thru 10, 13, 14, 18, 20, 20A, 21A)	1
1	———	OMIT	1
2	———	OMIT	1
3	949290	CAP, Cylinder — Hydraulic End	1
4	———	§RING, Back-Up — (See "B")	1
5	———	§O-RING, Cap — (See "B")	1
6	———	§RING, Piston Wear — (See "B")	1
7	———	§RING, Back-Up — (See "B")	1
8	———	§O-RING, Piston — (See "B")	1
9	———	§RING, Back-Up — (See "B")	1
10	———	§RING, Piston Wear — (See "B")	1
11	———	§PISTON — (See "A")	1
12	———	§CYLINDER — (See "A")	1
13	———	§O-RING, Cap — (See "B")	1
14	———	§RING, Back-Up — (See "B")	1
15	949290	CAP, Cylinder — Gas End	1
16	17E-10	LKWSHR, Protector	2
17	85G-1008	SCREW, Protector	2
18	———	§O-RING, Gas Valve — (See "B")	1
19	949291	PROTECTOR, Valve	1
20	———	§CAP, Gas Valve — (See "B")	1
20A	———	†§CAP, Gas Valve Core Remover — (See "B")	1
21	944745	VALVE ASSY, Gas (Inc. 20, 21A)	1
21A	———	†§CORE, Gas Valve — (See "B" or 21)	1

†Not Illustrated
§Not Sold Separately

WHEN ORDERING PARTS, ALWAYS STATE MODEL AND SERIAL NO. OF MACHINE

https://truckmanualshub.com/

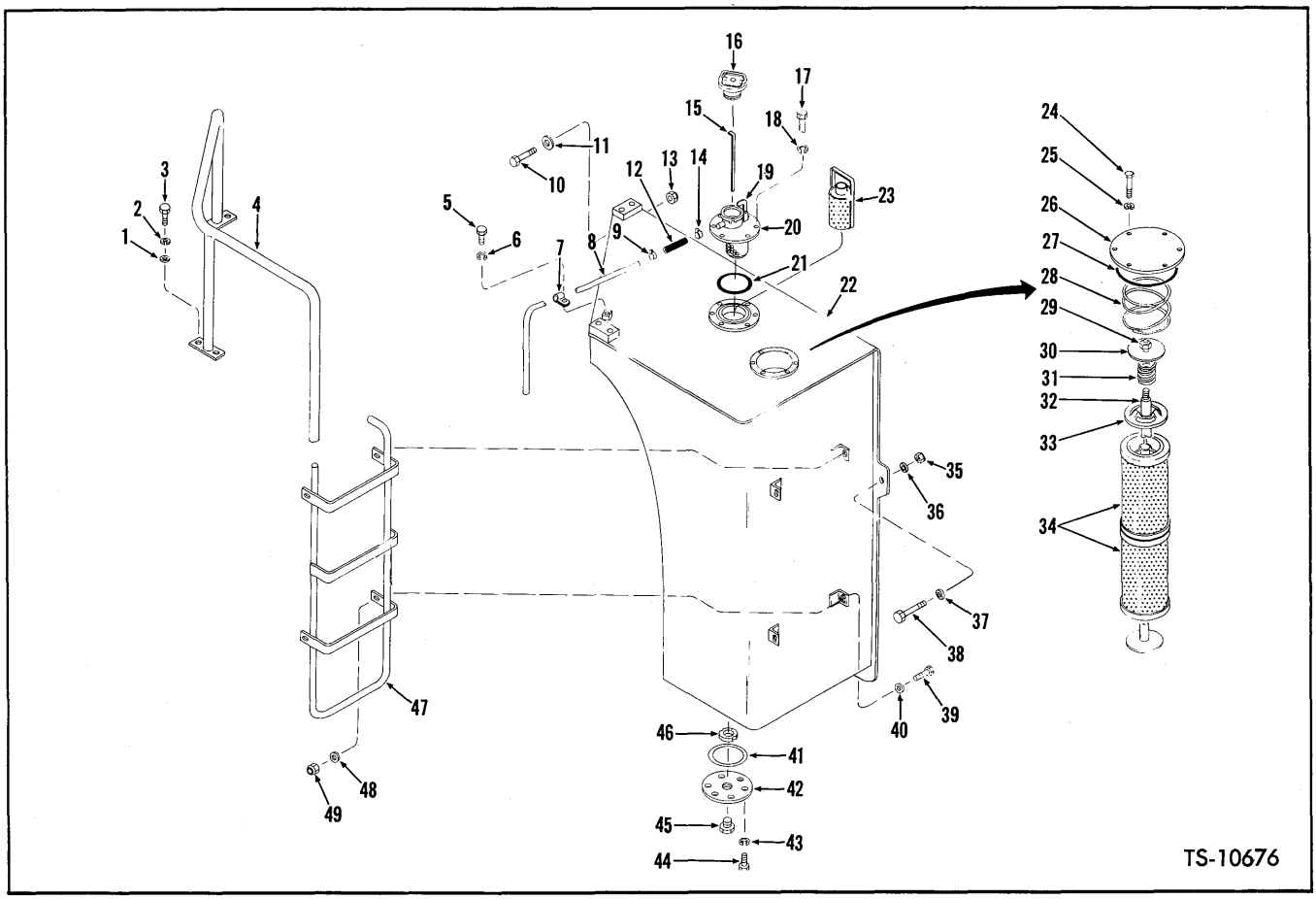

HYDRAULIC OIL RESERVOIR, FILTERS & STEP

Item No.	Part No.	Description	No. Req'd.
1	619029	WASHER, Hand Rail to Reservoir	4
2	4E-08	LKWSHR, Hand Rail to Reservoir	4
3	24C-824	BOLT, Hand Rail to Reservoir	4
4	1544779	HAND RAIL — R.H.	1
5	24C-612	BOLT, Clamp to Reservoir	1
6	4E-06	LKWSHR, Clamp to Reservoir	1
7	30H-31	CLIP, Overflow Tube	1
8	567746	TUBE, Overflow	1
9	521874	CLAMP, Hose to Tube	1
10	24C-1260	BOLT, Reservoir to Frame Angle	2
11	616809	WASHER, Reservoir to Frame Angle	4
12	743563	HOSE, Filler Neck to Tube (3½" lg.)	1
13	18D-12	NUT, Reservoir to Frame Angle	2
14	521874	CLAMP, Hose to Filler Neck	1
15	1510095	DIPSTICK, Hydraulic Oil	1
16	554843	CAP, Filler	1
17	24C-612	BOLT, Filler Neck to Reservoir	6
18	4E-06	LKWSHR, Filler Neck to Reservoir	6
19	1543512	LATCH, Cap Lock	1
19A	1H-414	†RIVET	1
20	567742	FILLER NECK (Inc. 19, 19A)	1
21	25K-40624	O-RING, Filler Neck to Reservoir	1
22	1538064	RESERVOIR, Hydraulic Oil	1
23	1532445	FILTER, Suction	1
24	24C-614	BOLT, Cover to Reservoir	6
25	4E-06	LKWSHR, Cover to Reservoir	6
26	1529896	PLATE, Cover	1
27	25K-40808	O-RING, Cover Plate	1
28	1543238	SPRING, Cover Plate	1
29	39D-06	NUT, Guide Rod	2
30	1529704	WASHER, Guide Rod	1
31	1530598	SPRING, Retainer	1
32	1529702	ROD, Guide	1
33	1529679	RETAINER, Filter	1
34	1530600	FILTER, Return	2
35	18D-12	NUT, Reservoir to Frame	1
36	616809	WASHER, Reservoir to Frame	1
37	616809	WASHER, Reservoir to Frame	1
38	24C-1244	BOLT, Reservoir to Frame	1
39	24C-828	BOLT, Step to Reservoir	4
40	619029	WASHER, Step to Reservoir	4
41	25K-40428	O-RING, Plate to Reservoir	1
42	587613	PLATE, Reservoir Inspection	1
43	4E-06	LKWSHR, Plate to Reservoir	6
44	24C-612	BOLT, Plate to Reservoir	6
45	40K-16	PLUG, Inspection Plate	1
46	525293	MAGNET, Oil Reservoir	1
47	1544778	STEP — R.H.	1
48	619029	WASHER, Step to Reservoir	4
49	18D-08	NUT, Step to Reservoir	4

†Not Illustrated

WHEN ORDERING PARTS, ALWAYS STATE MODEL AND SERIAL NO. OF MACHINE

https://truckmanualshub.com/

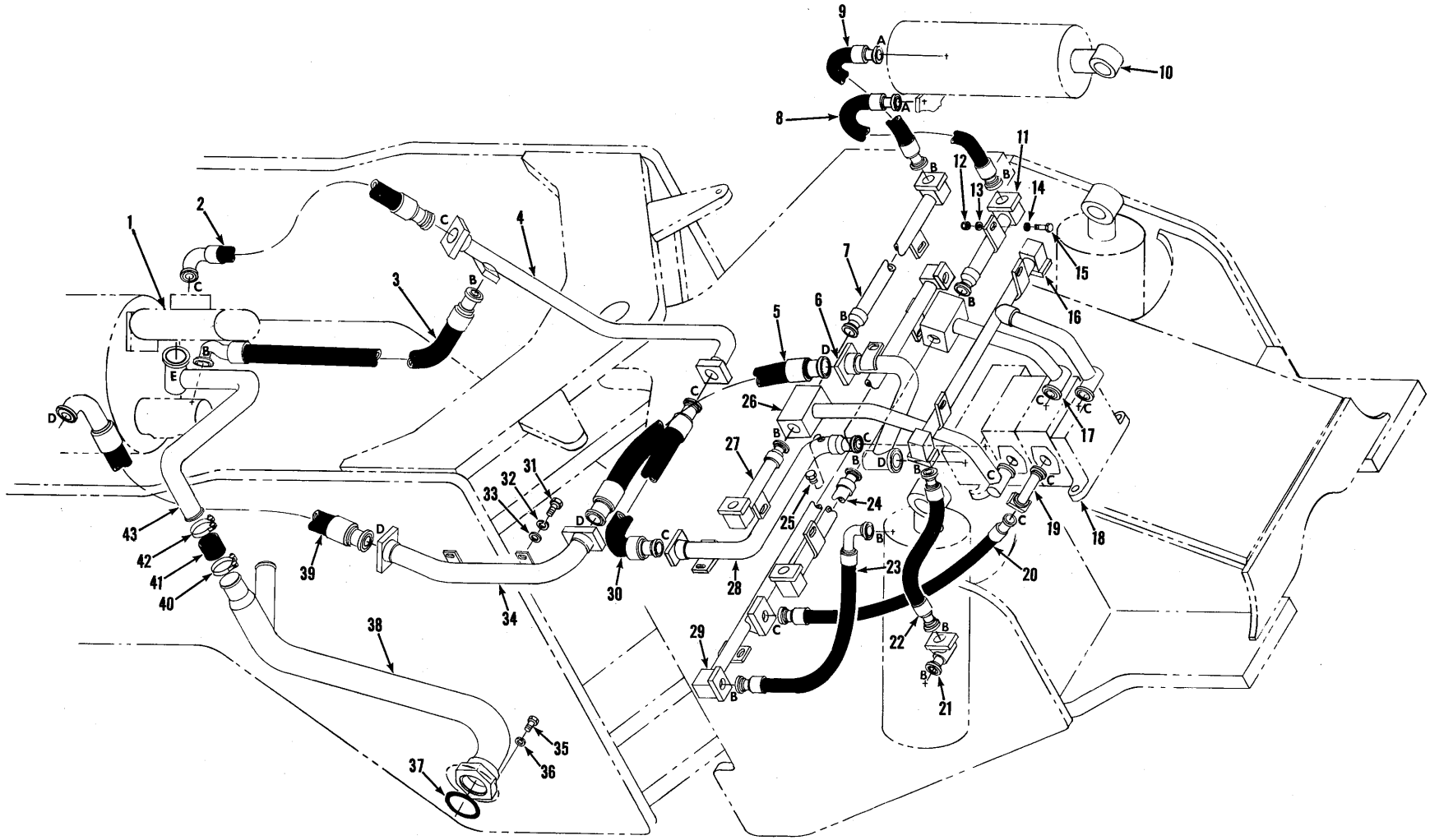

HYDRAULIC SYSTEM — BUCKET & BOOM
For Serial: 425A101 thru 317, 319 thru 325, 327 thru 336

TS-10633

https://truckmanualshub.com/

HYDRAULIC SYSTEM — BUCKET & BOOM

For Serial: 425A101 thru 317, 319 thru 325, 327 thru 336

Item No.	Part No.	Description	No. Req'd.
1	———	PUMP, Main — See Index	—
2	569499	HOSE, Pump to Tube	1
3	948702	HOSE, Pump to Tube	1
4	1538396	TUBE, Hose to Hose	1
5	1546918	HOSE, Tube to Tube	1
6	1538421	TUBE, Valve to Hose	1
7	1548654	TUBE, Bucket Rod — L.H.	1
8	1514649	HOSE, Tube to Cylinder	2
9	1514649	HOSE, Tube to Cylinder	2
10	———	CYLINDER, Bucket — See Index	—
11	1543750	TUBE, Bucket Base — L.H.	1
12	18D-08	NUT, Tube Mounting	10
13	703891	WASHER, Tube Mounting	10
14	703891	WASHER, Tube Mounting	10
15	24C-832	BOLT, Tube Mounting	10
16	1543683	TUBE, Tube Boom Base	1
17	1543700	TUBE, Tube to Valve	1
18	———	VALVE, Main — See Index	—
19	1548635	TUBE, Boom Base	1
20	1523346	HOSE, Tube to Tube	1
21	1509065	JOINT, Swivel	2
22	1513747	HOSE, Tube to Cylinder	2
23	1543542	HOSE, Cylinder to Tube	2
24	1543773	TUBE, Bucket Base — R.H.	1
25	40K-04	PLUG, Pipe	1
26	1543731	TUBE, Bucket Rod	1
27	1548655	TUBE, Bucket Rod — R.H.	1
28	1538436	TUBE, Supply (Inc. 25)	1
29	1543858	TUBE, Boom Rod	1
30	1538873	HOSE, Tube to Tube	1
31	24C-820	BOLT, Tube Mounting	4
32	4E-08	LKWSHR, Tube Mounting	4
33	703891	WASHER, Tube Mounting	4
34	1538443	TUBE, Hose to Hose	1
35	23C-1036	BOLT, Tube to Reservoir	4
36	4E-10	LKWSHR, Tube to Reservoir	4
37	1306626	O-RING, Tube to Reservoir	1
38	1538562	TUBE, Suction	1
39	1546919	HOSE, Tube to Reservoir	1
40	540106	CLAMP, Hose to Tube	1
41	533478	HOSE, Tube to Tube	1
42	540106	CLAMP, Hose to Tube	1
43	1538582	TUBE, Suction	1

NOTE: To determine part number of flange halves refer to letter designation on illustration, and then to Chart.

GROUP No. Req'd. Per Connection	FLANGE HALF 2	O-RING 1	BOLT 4	LKWSHR 4	SIZE
A	663093	1306622	23C-620	4E-06	1"
B	1511520	1306623	23C-724	4E-07	1¼"
C	1511521	1306624	23C-824	4E-08	1½"
D	1511522	1306625	23C-824	4E-08	2"
E	663097	886851	23C-828	4E-08	2½"

WHEN ORDERING PARTS, ALWAYS STATE MODEL AND SERIAL NO. OF MACHINE

https://truckmanualshub.com/

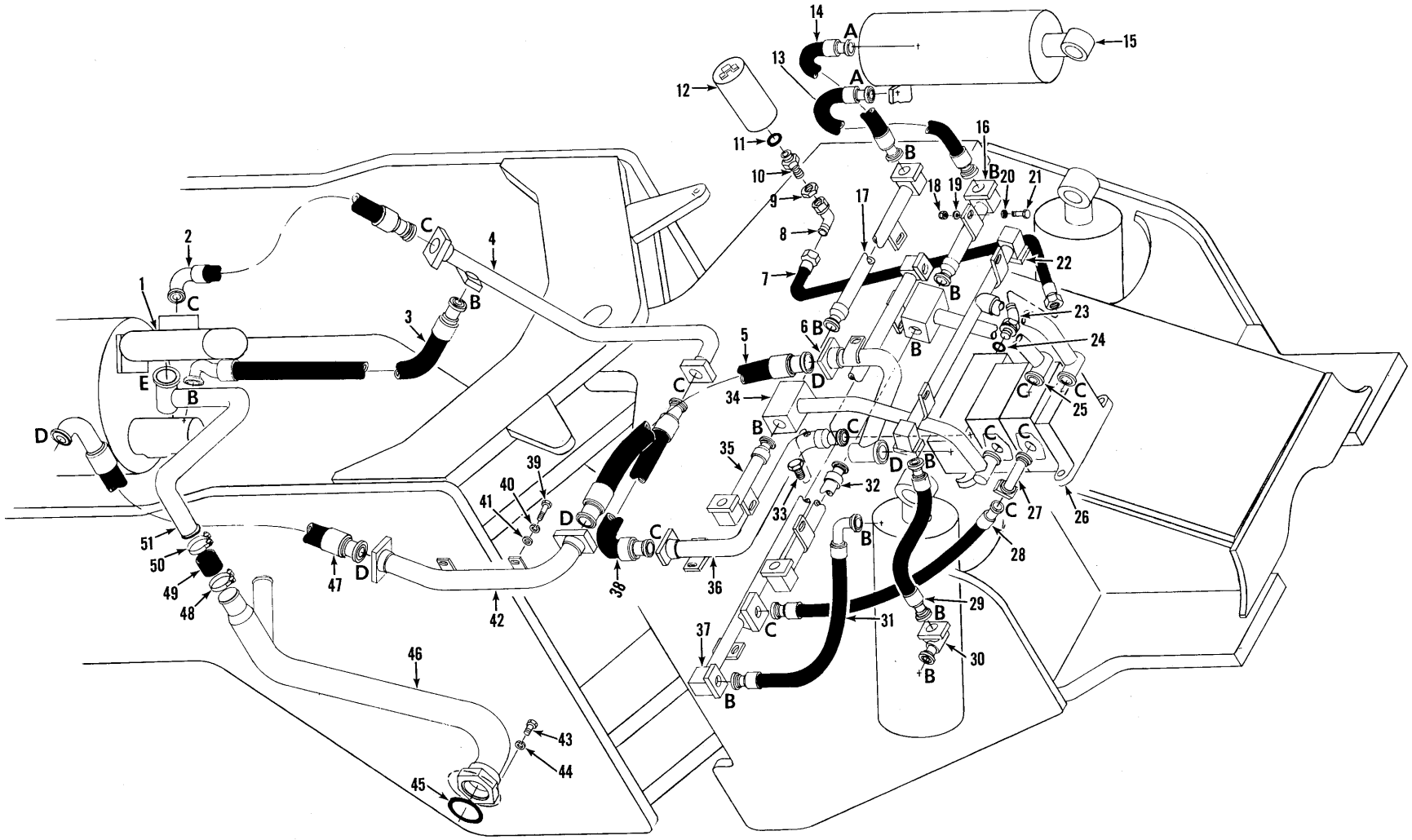

HYDRAULIC SYSTEM — BUCKET & BOOM
For Serial: 425A318, 326, 337 thru 425A999

TS-11509 B

https://truckmanualshub.com/

HYDRAULIC SYSTEM — BUCKET & BOOM

For Serial: 425A318, 326, 337 thru 425A999

Item No.	Part No.	Description	No. Req'd.
1	———	PUMP, Main — See Index	—
2	569499	HOSE, Pump to Tube	1
3	948702	HOSE, Pump to Tube	1
4	1538396	TUBE, Hose to Hose	1
5	1546918	HOSE, Tube to Tube	1
6	1538421	TUBE, Valve to Hose	1
7	730468	HOSE, Valve to Accumulator	1
8	11K-8	ELBOW, Hose to Union	1
9	86F-8	NUT, Union	1
10	1512855	UNION, Accumulator to Elbow (Inc. 11)	1
11	91F-8	O-RING, Union	1
12	———	ACCUMULATOR — See Index	1
13	1514649	HOSE, Tube to Cylinder	2
14	1514649	HOSE, Tube to Cylinder	2
15	———	CYLINDER, Bucket — See Index	—
16	1543750	TUBE, Bucket Base — L.H.	1
17	1548654	TUBE, Bucket Rod — L.H.	1
18	18D-08	NUT, Tube Mounting	10
19	703891	WASHER, Tube Mounting	10
20	703891	WASHER, Tube Mounting	10
21	24C-832	BOLT, Tube Mounting	10
22	1543683	TUBE, Boom Base	1
23	17K-8	ELBOW, Valve to Hose	1
24	91F-8	O-RING, Elbow	1
25	1543700	TUBE, Tube to Valve	1
26	———	VALVE, Main — See Index	—
27	1548635	TUBE, Boom Base	1
28	1523346	HOSE, Valve to Tube	1
29	1513747	HOSE, Boom Base	2
30	1509065	JOINT, Swivel	2
31	1543542	HOSE, Cylinder to Tube	2
32	1543773	TUBE, Bucket Base — R.H.	1
33	40K-04	PLUG, Pipe	1
34	1543731	TUBE, Bucket Rod	1
35	1548655	TUBE, Bucket Rod — R.H.	1
36	1538436	TUBE, Hose to Hose	1
37	1543858	TUBE, Boom Rod	1
38	1538873	HOSE, Tube to Tube	1
39	24C-820	BOLT, Tube Mounting	4
40	4E-08	LKWSHR, Tube Mounting	4
41	703891	WASHER, Tube Mounting	4
42	1538443	TUBE, Hose to Hose	1
43	23C-1040	BOLT, Tube to Reservoir	4
44	4E-10	LKWSHR, Tube to Reservoir	4
45	1306626	O-RING, Tube to Reservoir	1
46	1538562	TUBE, Suction	1
47	1546919	HOSE, Tube to Reservoir	1
48	540106	CLAMP, Hose	1
49	533478	HOSE, Tube to Tube	1
50	540106	CLAMP, Hose	1
51	1538582	TUBE, Suction	1

NOTE: To determine part number of flange halves refer to letter designation on illustration, and then to Chart.

GROUP No. Req'd. Per Connection	FLANGE HALF 2	O-RING 1	BOLT 4	LKWSHR 4	SIZE
A	663093	1306622	23C-620	4E-06	1″
B	1511520	1306623	23C-724	4E-07	1¼″
C	1511521	1306624	23C-824	4E-08	1½″
D	1511522	1306625	23C-824	4E-08	2″
E	663097	886851	23C-828	4E-08	2½″

WHEN ORDERING PARTS, ALWAYS STATE MODEL AND SERIAL NO. OF MACHINE

https://truckmanualshub.com/

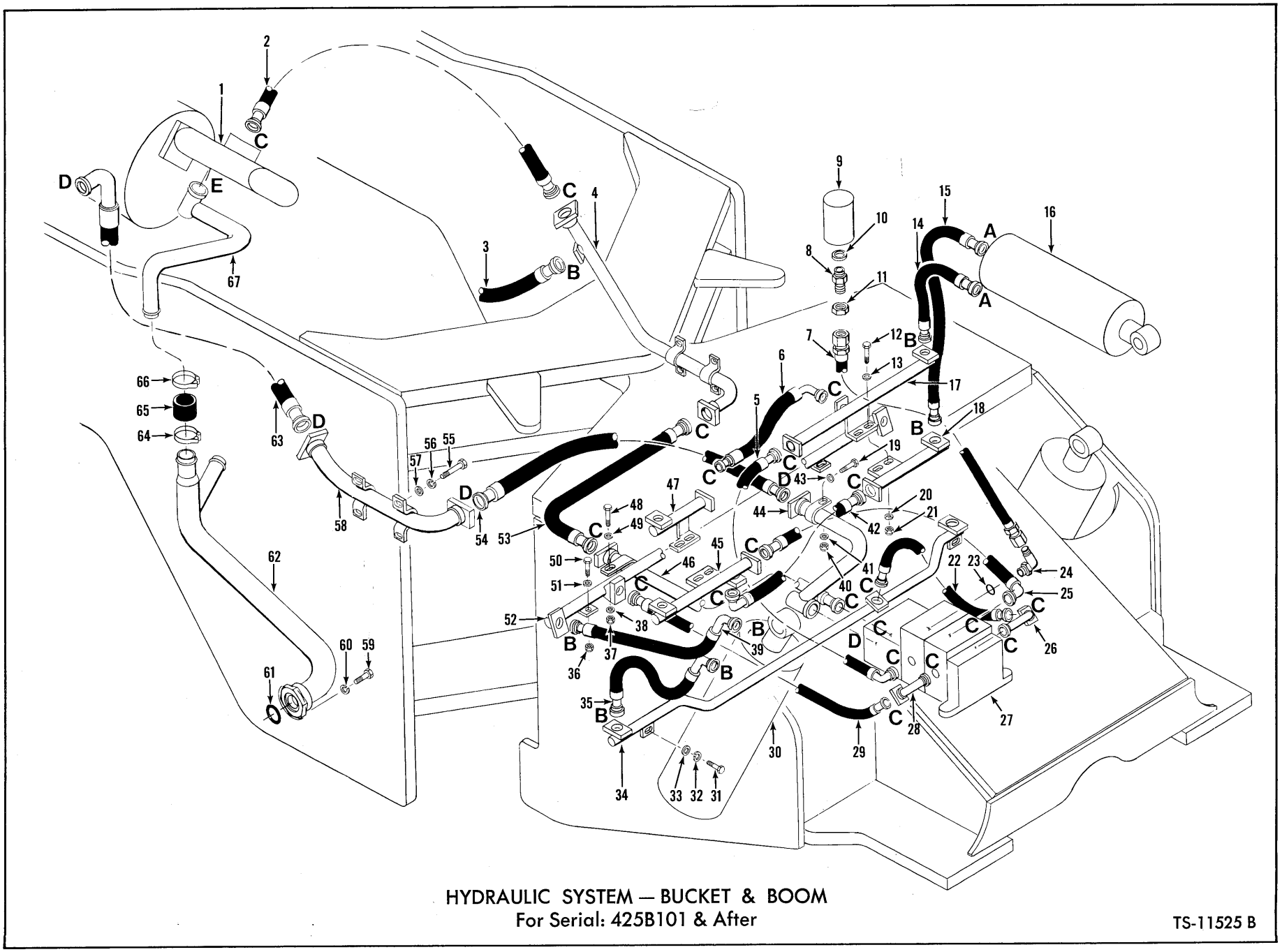

HYDRAULIC SYSTEM — BUCKET & BOOM
For Serial: 425B101 & After

TS-11525 B

https://truckmanualshub.com/

HYDRAULIC SYSTEM — BUCKET & BOOM

For Serial: 425B101 & After

Item No.	Part No.	Description	No. Req'd.
1	———	PUMP, Main — See Index	—
2	1513126	HOSE, Pump to Tube	1
3	948702	HOSE, Pump to Tube	1
4	1514435	TUBE, Hose to Hose	1
5	1511637	HOSE, Tube to Valve	1
6	1511635	HOSE, Tube to Tube	1
7	730468	HOSE, Accumulator to Valve	1
8	1512855	CONNECTOR, Accumulator to Hose	1
9	———	ACCUMULATOR — See Index	—
10	91F-8	O-RING, Connector	1
11	86F-8	NUT, Accumulator Mounting	1
12	24C-836	BOLT, Tube Mounting	4
13	703891	WASHER, Tube Mounting	4
14	1514649	HOSE, Tube to Cylinder	2
15	1514649	HOSE, Tube to Cylinder	2
16	———	CYLINDER, Bucket — See Index	—
17	1511719	TUBE, Bucket Cylinder Rod — L.H.	1
18	1513030	TUBE, Bucket Cylinder Base — L.H.	1
19	24C-828	BOLT, Tube Mounting	1
20	703891	WASHER, Tube Mounting	4
21	18D-08	NUT, Tube Mounting	4
22	1511633	HOSE, Tube to Valve	1
23	91F-8	O-RING, Elbow	1
24	17K-8	ELBOW, Hose to Valve (Inc. 23)	1
25	1511636	HOSE, Tube to Valve	1
26	1548635	ELBOW, Hose to Valve	1
27	———	VALVE, Main — See Index	—
28	1548635	ELBOW, Hose to Valve	1
29	1513736	HOSE, Valve to Tube	1
30	———	CYLINDER, Boom — See Index	—
31	24C-824	BOLT, Tube Mounting	3
32	4E-08	LKWSHR, Tube Mounting	3
33	703891	WASHER, Tube Mounting	3
34	1511727	TUBE, Boom Base	1
35	1511632	HOSE, Cylinder to Tube	2
36	18D-08	NUT, Tube Mounting	2
37	18D-08	NUT, Tube Mounting	1
38	703891	WASHER, Tube Mounting	1
39	1510360	HOSE, Tube to Cylinder	2
40	18D-08	NUT, Tube Mounting	1
41	703891	WASHER, Tube Mounting	1
42	1511635	HOSE, Tube to Tube	1
43	703891	WASHER, Tube Mounting	1
44	1538421	TUBE, Return	1
45	1511720	TUBE, Bucket Cylinder Base — R.H.	1
46	1538436	TUBE, Supply (Inc. 46A)	1
46A	40K-04	†PLUG, Pipe	1
47	1511721	TUBE, Bucket Cylinder Rod — R.H.	1
48	24C-828	BOLT, Tube Mounting	1
49	703891	WASHER, Tube Mounting	1
50	24C-828	BOLT, Tube Mounting	2
51	703891	WASHER, Tube Mounting	2
52	1511722	TUBE, Boom Rod	1
53	1514275	HOSE, Tube to Tube	1
54	1514277	HOSE, Tube to Tube	1
55	24C-820	BOLT, Tube Mounting	8
56	4E-08	LKWSHR, Tube Mounting	8
57	703891	WASHER, Tube Mounting	8
58	1514434	TUBE, Return	1
59	23C-1036	BOLT, Tube to Reservoir	4
60	4E-10	LKWSHR, Tube to Reservoir	4
61	1306626	O-RING, Tube to Reservoir	1
62	1538562	TUBE, Suction	1
63	1514276	HOSE, Tube to Reservoir — Return	1
64	540106	CLAMP, Hose	1
65	518330	HOSE, Tube to Tube	1
66	540106	CLAMP, Hose	1
67	1538582	TUBE, Suction	1

†Not Illustrated

GROUP	FLANGE HALF	O-RING	BOLT	LKWSHR	SIZE
No. Req'd. Per Connection	2	1	4	4	
A	663093	1306622	23C-620	4E-06	1"
B	1511520	1306623	23C-724	4E-07	1¼"
C	1511521	1306624	23C-824	4E-08	1½"
D	1511522	1306625	23C-824	4E-08	2"
E	663097	886851	23C-828	4E-08	2½"

WHEN ORDERING PARTS, ALWAYS STATE MODEL AND SERIAL NO. OF MACHINE

https://truckmanualshub.com/

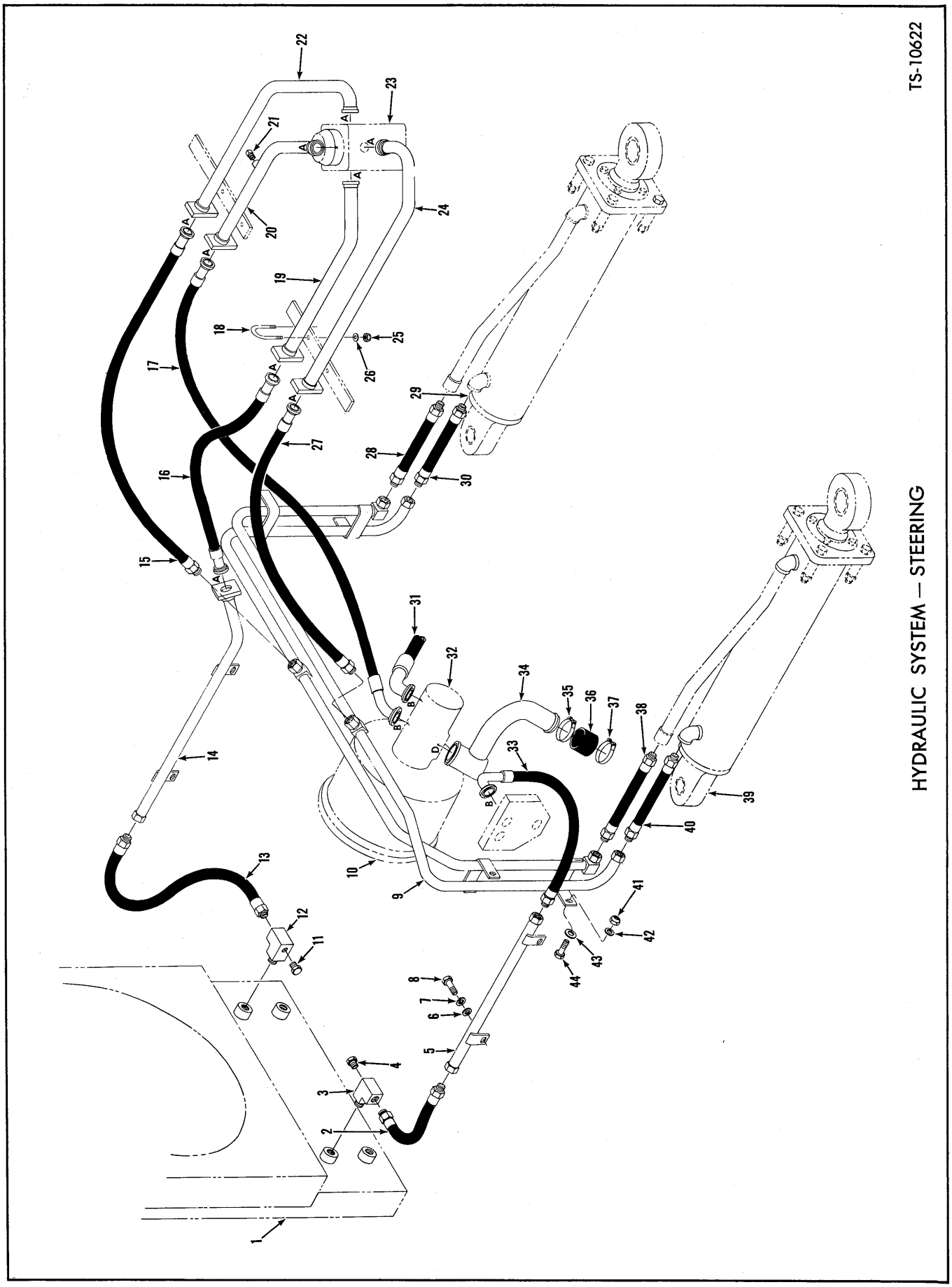

https://truckmanualshub.com/

HYDRAULIC SYSTEM — STEERING

Item No.	Part No.	Description	No. Req'd.
1	———	RADIATOR — See Index	—
2	539106	HOSE, Tube to Radiator	1
3	1542033	ELBOW, Hose to Cooler	1
4	40K-04	PLUG, Pipe	1
5	1541679	TUBE, Cooler to Reservoir	1
6	656672	WASHER, Tube to Frame	4
7	4E-06	LKWSHR, Tube to Frame	4
8	24C-620	BOLT, Tube to Frame	4
9	1541974	TUBE, Steering Cross	1
10	———	TORQUE CONVERTER — See Index	—
11	40K-04	PLUG, Pipe	1
12	1511562	ELBOW, Hose to Cooler	1
12A	5K-824	†NIPPLE, Elbow to Cooler	1
13	539106	HOSE, Tube to Cooler	1
14	1541969	TUBE, Cooler to Steer Gear	1
15	533417	HOSE, Tube to Cross Tube	1
16	1542395	HOSE, Cooler to Steering Gear	1
17	1545118	HOSE, Pump to Steering Gear	1
18	1508514	CLAMP, Tube to Frame	4
19	1542369	TUBE, Hose to Steering Gear	1
20	1542371	TUBE, Hose to Steering Gear (Inc. 21)	1
21	40K-04	PLUG, Pipe	1
22	1542373	TUBE, Hose to Steering Gear	1
23	———	STEERING GEAR — See Index	—
24	1542375	TUBE, Hose to Steering Gear	1
25	18D-06	NUT, Tube to Clamp	8
26	656672	WASHER, Tube to Clamp	8
27	533417	HOSE, Cross Tube to Tube	1
28	1541772	HOSE, Tube to Cylinder	1
29	———	CYLINDER, Steering — See Index	—
30	1541772	HOSE, Tube to Cylinder	1
31	948702	HOSE, Pump to Main Hydraulic	1
32	———	STEERING PUMP — See Index	—
33	1541770	HOSE, Reservoir to Tube	1
34	1538584	SUCTION TUBE	1
35	540106	CLAMP, Hose to Tube	1
36	533478	HOSE, Tube to Tube	1
37	540106	CLAMP, Hose to Tube	1
38	1541772	HOSE, Tube to Cylinder	1
39	———	CYLINDER, Steering — See Index	—
40	1541772	HOSE, Tube to Cylinder	1
41	18D-08	NUT, Tube to Frame	4
42	703891	WASHER, Tube to Frame	4
43	703891	WASHER, Tube to Frame	4
44	24C-824	BOLT, Tube to Frame	4

†Not Illustrated

NOTE: To determine part number of flange halves refer to letter designation on illustration, and then to Chart.

GROUP No. Req'd. Per Connection	FLANGE HALF 2	O-RING 1	BOLT 4	LKWSHR 4	SIZE
A	663093	1306622	23C-620	4E-06	1"
B	1511520	1306623	23C-724	4E-07	1¼"
C	1511521	1306624	23C-824	4E-08	1½"
D	663097	886851	17C-828	4E-08	2½"

WHEN ORDERING PARTS, ALWAYS STATE MODEL AND SERIAL NO. OF MACHINE

https://truckmanualshub.com/

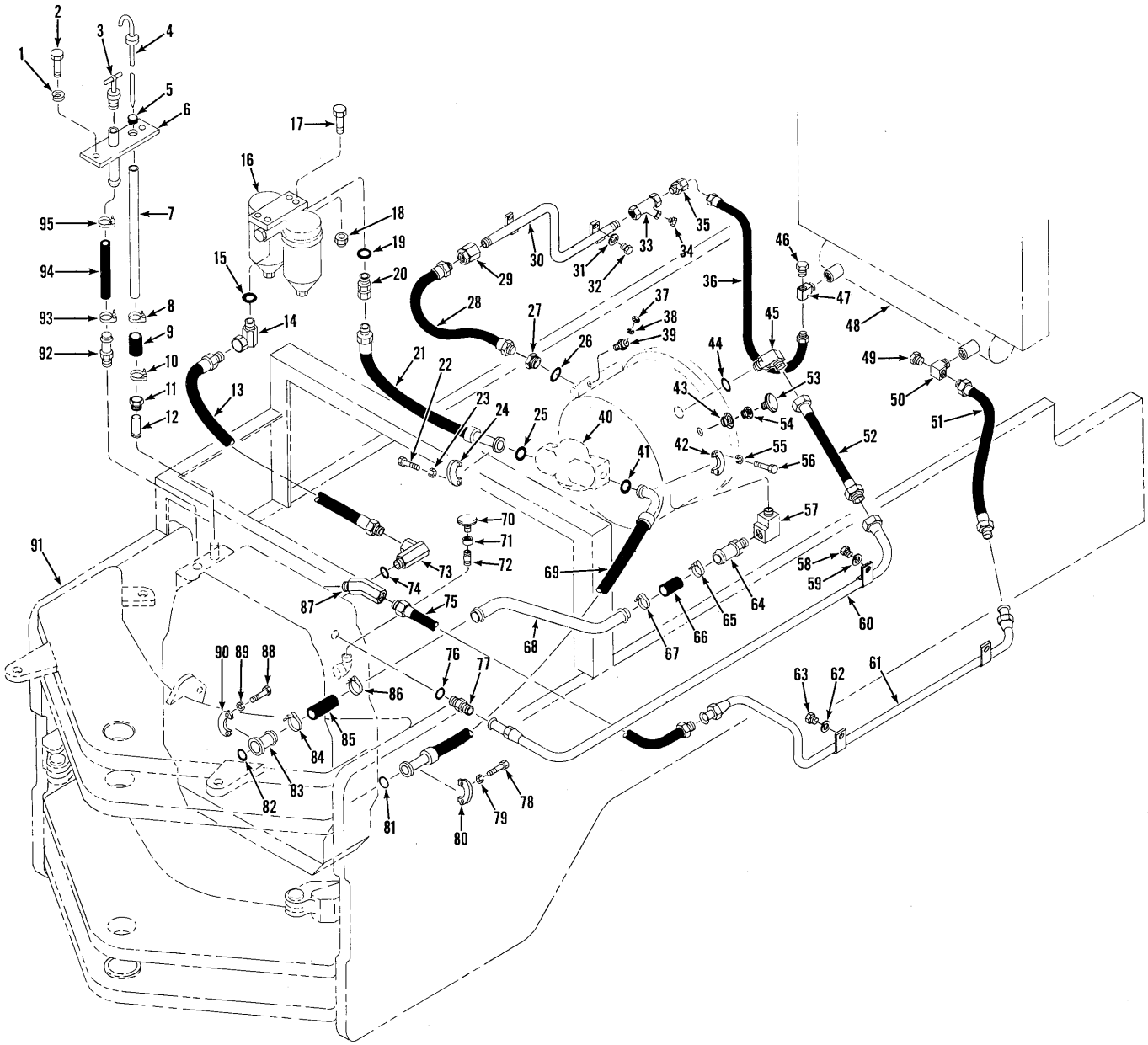

HYDRAULIC SYSTEM — TRANSMISSION & TORQUE CONVERTER

TS-10576

https://truckmanualshub.com/

HYDRAULIC SYSTEM — TRANSMISSION & TORQUE CONVERTER

Item No.	Part No.	Description	No. Req'd.
1	4E-06	LKWSHR, Filler Plate	2
2	23C-616	BOLT, Filler Plate	2
3	568824	PLUG, Filler	1
4	572215	DIPSTICK, Oil Level	1
5	560640	GROMMET, Dipstick Tube	1
6	568807	PLATE, Filler	1
7	572213	TUBE, Dipstick	1
8	521874	CLAMP, Hose to Tube	1
9	743563	HOSE, Tube to Transmission Tube	1
10	521874	CLAMP, Hose to Tube	1
11	92F-7	FITTING, Tube to Transmission	1
12	1502876	TUBE, Hose to Transmission	1
13	546809	HOSE, Filter to Transmission	1
14	1520566	ADAPTER UNION (Inc. 15)	1
15	91F-10	O-RING, Adapter Union	1
16	228189	FILTER ASSY (Inc. 16A)	1
16A	215502	CARTRIDGE KIT, Filter	2
17	24C-724	BOLT, Filter Mounting	4
18	18D-07	NUT, Filter Mounting	4
19	91F-10	O-RING, Adapter	1
20	587075	ADAPTER, Hose to Filter (Inc. 19)	1
21	1541771	HOSE, Filter to Pump	1
22	23C-620	BOLT, Flange Half to Pump	4
23	4E-06	LKWSHR, Flange Half to Pump	4
24	663093	FLANGE HALF, Hose to Pump	2
25	1306622	O-RING, Hose to Pump	1
26	91F-11	O-RING, Adapter	1
27	588399	ADAPTER, Hose to Converter	1
28	539106	HOSE, Converter to Tube	1
29	37F-6	ADAPTER UNION, Hose to Tube	1
30	1541970	TUBE, Hose to Strainer	1
31	4E-06	LKWSHR, Tube to Frame	2
32	24C-620	BOLT, Tube to Frame	2
32A	656672	†WASHER, Tube to Frame	2
33	1533882	STRAINER, Oil (Inc. 33A & 34)	1
33A	946943	†SCREEN, Strainer	1
34	40K-12	PLUG, Strainer Pipe	1
35	36F-6	ADAPTER UNION	1
36	539106	HOSE, Strainer to Bottom Tank	1
37	14D-10	NUT, Sender	1
38	12E-10	LKWSHR, Sender	1
39	551323	SENDER UNIT, Converter Temperature	1
40	———	PUMP, Converter Charging — See Index	—
41	1306623	O-RING, Hose to Pump	1
42	1511520	FLANGE HALF, Hose to Pump	2
43	356626	BUSHING, Reducing	1
44	91F-10	O-RING, Elbow	1
45	588820	ELBOW, Tube to Converter	1
46	40K-04	PLUG, Elbow	1

†Not Illustrated

WHEN ORDERING PARTS, ALWAYS STATE MODEL AND SERIAL NO. OF MACHINE

https://truckmanualshub.com/

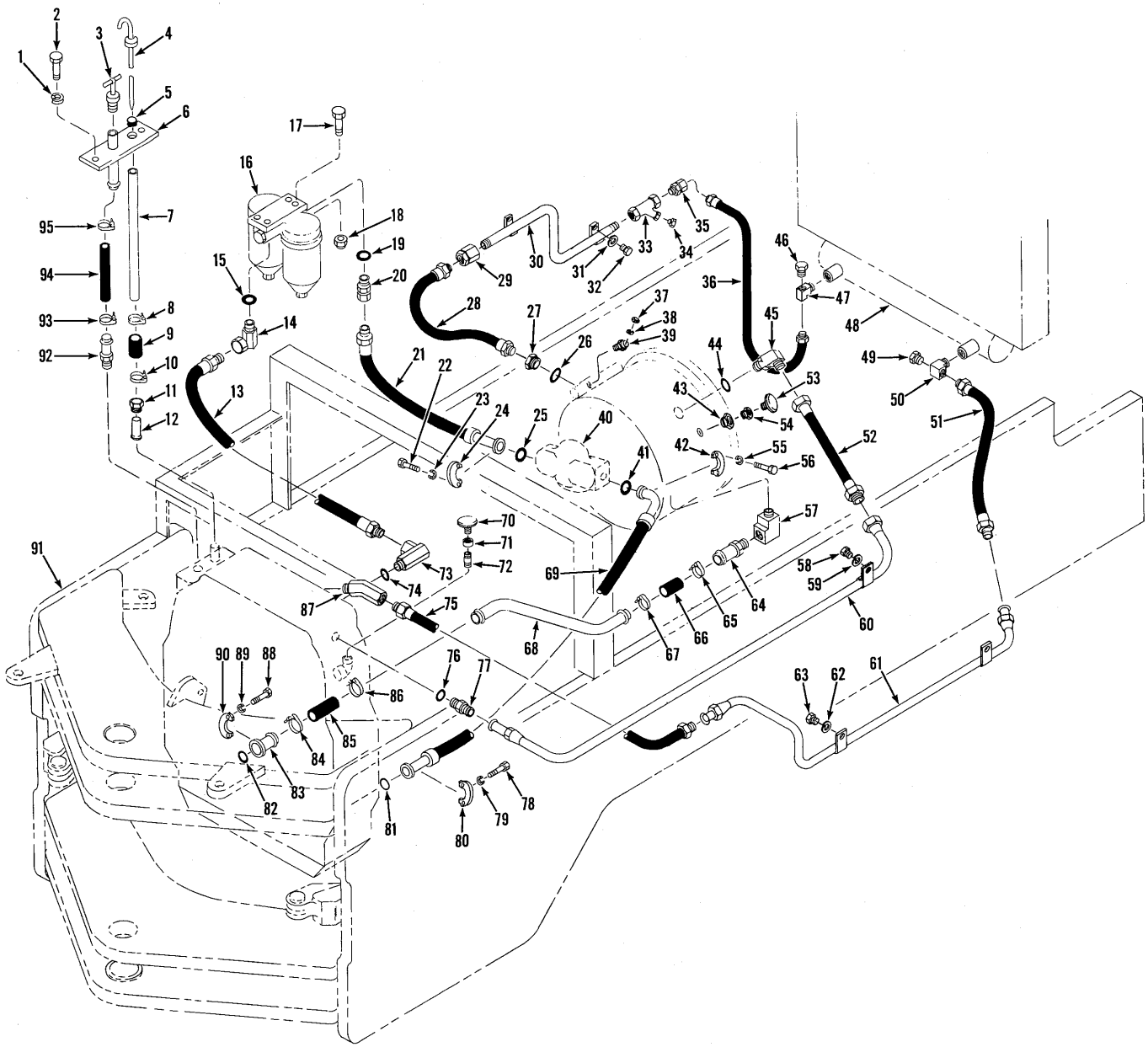

HYDRAULIC SYSTEM — TRANSMISSION & TORQUE CONVERTER

TS-10576

https://truckmanualshub.com/

HYDRAULIC SYSTEM — TRANSMISSION & TORQUE CONVERTER (Continued)

Item No.	Part No.	Description	No. Req'd.
47	1542033	ELBOW, Hose to Bottom Tank	1
48	———	RADIATOR — See Index	—
49	40K-04	PLUG, Elbow	1
50	1511562	ELBOW, Hose to Bottom Tank	1
50A	5K-820	†NIPPLE, Elbow to Bottom Tank	1
51	539106	HOSE, Tube to Bottom Tank	1
52	1541962	HOSE, Tube to Converter	1
53	211433	BREATHER, Air	1
54	227265	CHECK, Air Breather	1
55	4E-07	LKWSHR, Flange Half	4
56	23C-724	BOLT, Flange Half	4
57	29F-6	ELBOW, Converter Connecting	1
58	24C-616	BOLT, Tube to Frame	1
59	4E-06	LKWSHR, Tube to Frame	1
60	1541975	TUBE, Transmission to Converter	1
61	1541971	TUBE, Radiator to Transmission	1
62	4E-08	LKWSHR, Tube Mounting	2
63	24C-816	BOLT, Tube Mounting	2
64	592849	STEM, Hose to Elbow	1
65	1545004	CLAMP, Hose to Stem	1
66	585883	HOSE, Stem to Tube	1
67	1545004	CLAMP, Hose to Tube	1
68	1538613	TUBE, Converter Drain	1
69	1543547	HOSE, Converter to Transmission	1
70	211433	BREATHER, Air	1
71	75F-3	COUPLING, Pipe	1
72	5K-340	NIPPLE, Pipe	1
73	1520566	ADAPTER UNION (Inc. 74)	1
74	91F-10	O-RING, Adapter Union	1
75	539106	HOSE, Tube to Transmission	1
76	91F-10	O-RING, Connector	1
77	15K-10	CONNECTOR, Tube to Transmission (Inc. 76)	1
78	23C-824	BOLT, Flange Half to Transmission	4
79	4E-08	LKWSHR, Flange Half to Transmission	4
80	1511521	FLANGE HALF, Hose to Transmission	2
81	1306624	O-RING, Flange Half	1
82	1306624	O-RING, Flange Half	1
83	799020	STEM, Hose to Transmission	1
84	1545004	CLAMP, Hose to Stem	1
85	585883	HOSE, Tube to Stem	1
86	1545004	CLAMP, Hose to Tube	1
87	533480	ADAPTER UNION, Hose to Transmission (Inc. 87A)	1
87A	91F-10	†O-RING, Elbow	1
88	23C-824	BOLT, Flange Half to Transmission	4
89	4E-08	LKWSHR, Flange Half to Transmission	4
90	1511521	FLANGE HALF, Transmission to Transmission	2
91	———	FRAME, Rear — See Index	—
92	667288	STEM, Filler Hose	1
92A	356621	†BUSHING, Reducing	1
93	1545186	CLAMP, Hose to Stem	1
94	568810	HOSE, Filler	1
95	1545186	CLAMP, Hose to Filler Plate	1

†Not Illustrated

WHEN ORDERING PARTS, ALWAYS STATE MODEL AND SERIAL NO. OF MACHINE

https://truckmanualshub.com/

https://truckmanualshub.com/

"M" GROUP

CONTENTS

Mid-Mount Bearing Assembly ..... M 2

https://truckmanualshub.com/

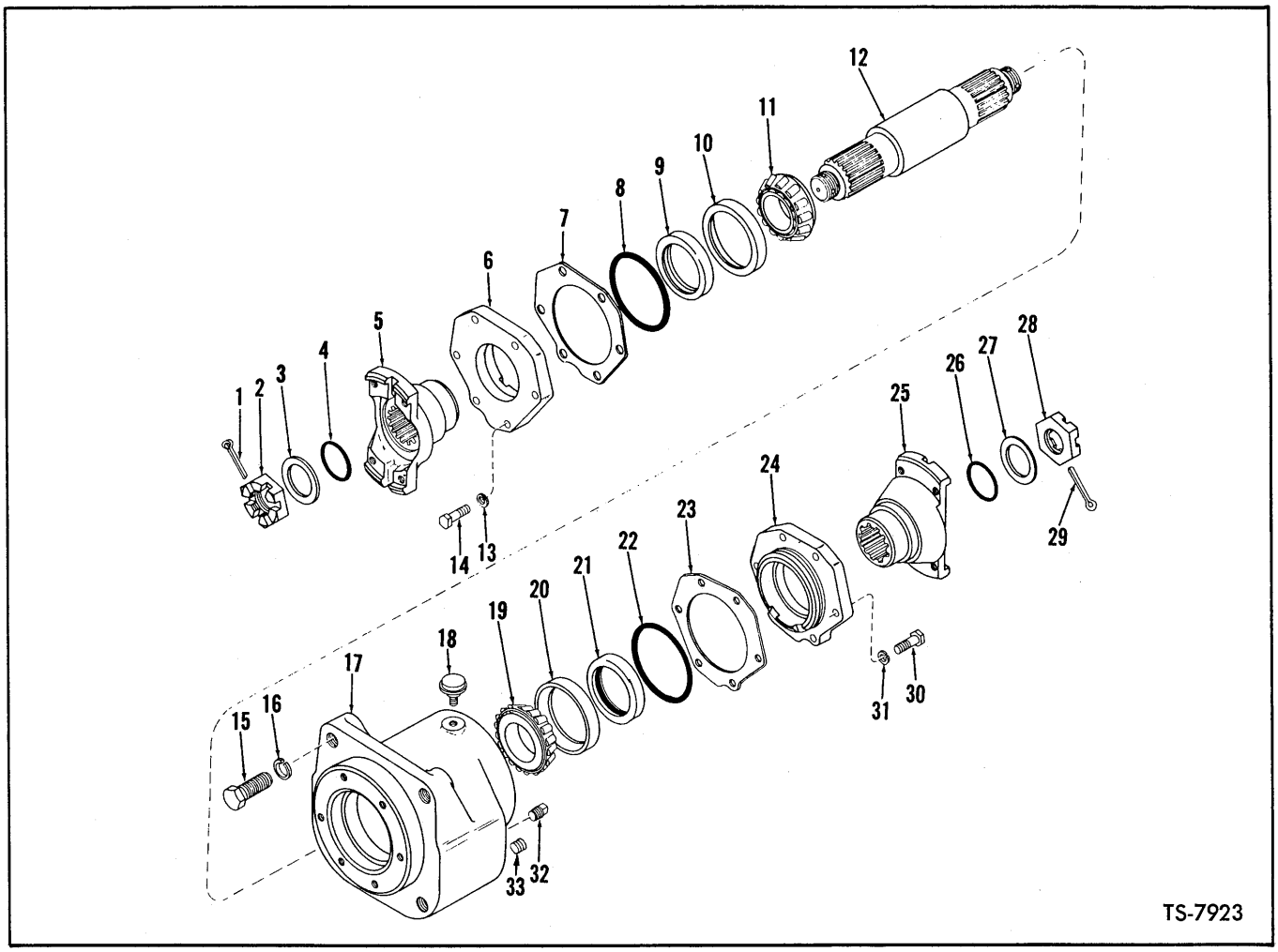

MID-MOUNT BEARING ASSEMBLY

Item No.	Part No.	Description	No. Req'd.
A	226705	BEARING ASSY, Mid-Mount (Inc. 1 thru 14, 17 thru 33)	1
1	1F-740	PIN, Flange Cotter	1
2	669897	NUT, Flange	1
3	217410	WASHER, Flange	1
4	25K-60212	O-RING, Flange	1
5	217471	FLANGE	1
6	226797	CAP, Bearing	1
7	217389	‡SHIM, Bearing Cap (.004)	—
7A	217390	†‡SHIM, Bearing Cap (.007)	—
7B	217391	†‡SHIM, Bearing Cap (.010)	—
8	25K-40428	O-RING, Bearing Cap	1
9	227154	SEAL, Bearing Cap	1
10	226026	CUP, Bearing	1
11	1305372	CONE, Bearing	1
12	226799	SHAFT, Mid-Mount Bearing	1
13	4E-08	LKWSHR, Bearing Cap to Housing	6
14	1C-828	BOLT, Bearing Cap to Housing	6
15	23C-1656	BOLT, Mid-Mount Bearing to Frame	4
16	4E-16	LKWSHR, Mid-Mount Bearing to Frame	4
16A	619028	†WASHER, Mid-Mount Bearing to Frame	4
17	226798	HOUSING, Mid-Mount Bearing	1
18	211433	BREATHER, Mid-Mount Bearing	1
19	1305372	CONE, Bearing	1
20	226026	CUP, Bearing	1
21	227154	SEAL, Bearing Cap	1
22	25K-40428	O-RING, Bearing Cap	1
23	217389	‡SHIM, Bearing Cap (.004)	—
23A	217390	†‡SHIM, Bearing Cap (.007)	—
23B	217391	†‡SHIM, Bearing Cap (.010)	—
24	226797	CAP, Bearing	1
25	217471	FLANGE	1
26	25K-60212	O-RING, Flange	1
27	217410	WASHER, Flange	1
28	669897	NUT, Flange	1
29	1F-740	PIN, Flange Cotter	1
30	1C-828	BOLT, Bearing Cap to Housing	6
31	4E-08	LKWSHR, Bearing Cap to Housing	6
32	13F-12	PLUG	1
33	215757	PLUG, Drain	1

†Not Illustrated
‡As Required

WHEN ORDERING PARTS, ALWAYS STATE MODEL AND SERIAL NO. OF MACHINE

https://truckmanualshub.com/

"N" GROUP

CONTENTS

Nameplate & Decals ..... N 2

https://truckmanualshub.com/

NAMEPLATES & DECALS

Item No.	Part No.	Description	No. Req'd.
1	1511711	DECAL, Articulated Warning	2
2	1548364	DECAL, Brake System Warning	1
3	1513209	DECAL, Caution, Hydraulic Pressure	3
4	547851	DECAL, Clark Equipment	2
5	1549006	DECAL, Emergency Hand Valve	1
6	1523338	DECAL, Engine Oil Change	1
7	1510525	DECAL, Lubrication	1
8	547852	DECAL, Michigan	3
9	1513932	DECAL, Model	2
10	1549005	DECAL, Not For Parking	1
11	1512006	DECAL, Patent	1
12	1505581	DECAL, Safety Wiring	1
13	1511805	DECAL, Shift Quadrant	1
14	1513887	TAG, Steering Warning	1
15	1534502	DECAL, Transmission Filter	1
16	538256	DECAL, Transmission Drain	1
17	535649	PLATE, Michigan — Casting — Grille	1
17A	7G-418	SCREW, Plate Mounting	4
17B	20E-04	LKWSHR, Plate Mounting	4
18	1511710	PLATE, Operating Precautions	1
18A	65G-406	SCREW, Plate Mounting	4
19	1527430	PLATE, Reservoir Strainer Service	1

WHEN ORDERING PARTS, ALWAYS STATE MODEL AND SERIAL NO. OF MACHINE

https://truckmanualshub.com/

"P" GROUP

CONTENTS

Propeller Shafts ..... P 2

Pump Group:

Pump, Main Hydraulic ..... P 6

Pump, Steering Hydraulic ..... P 8

https://truckmanualshub.com/

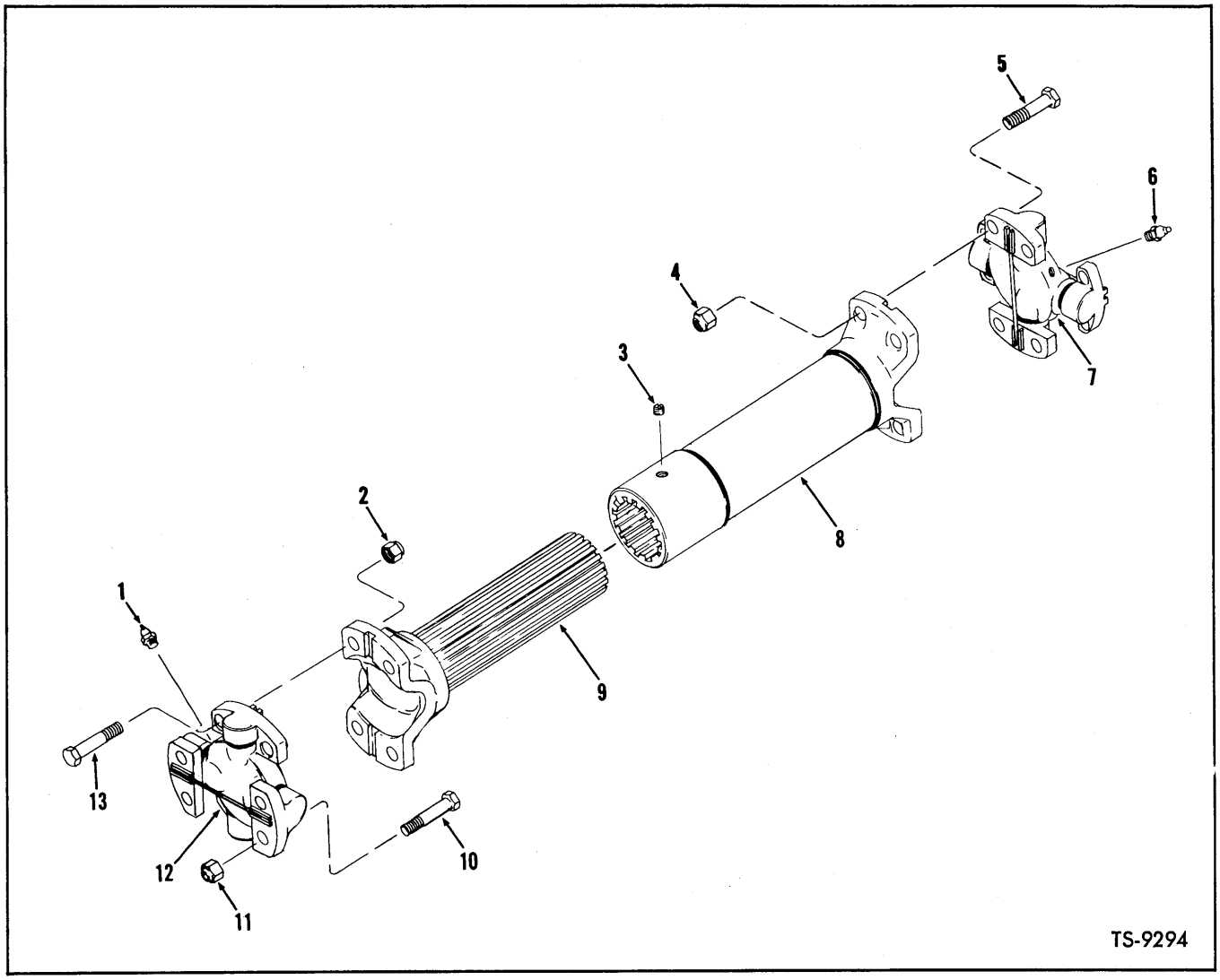

PROPELLER SHAFT ASSEMBLY — TRANSMISSION TO MID-MOUNT

For Serial: 425A101 thru 425A276

Item No.	Part No.	Description	No. Req'd.
A	1539019	*PROP SHAFT ASSY (Inc. 1 thru 13)	1
1	710126	FITTING, Spider & Bearing Grease	1
2	8D-08	NUT, Spider & Bearing to Tube	4
3	15F-02	PLUG, Grease	1
4	8D-08	NUT, Spider & Bearing to Tube	4
5	947682	BOLT, Spider & Bearing to Tube	4
6	710126	FITTING, Spider & Bearing	1
7	943561	SPIDER & BEARING ASSY (Inc. 6)	1
8	948173	SLIP YOKE (Inc. 3)	1
9	948174	TUBE	1
10	947682	BOLT, Spider & Bearing Attaching	8
11	8D-08	NUT, Spider & Bearing Attaching	8
12	943561	SPIDER & BEARING ASSY (Inc. 1)	1
13	947682	BOLT, Spider & Bearing to Tube	4

*NOTE: For complete replacement use 1549490 Prop Shaft Assy.

WHEN ORDERING PARTS, ALWAYS STATE MODEL AND SERIAL NO. OF MACHINE

https://truckmanualshub.com/

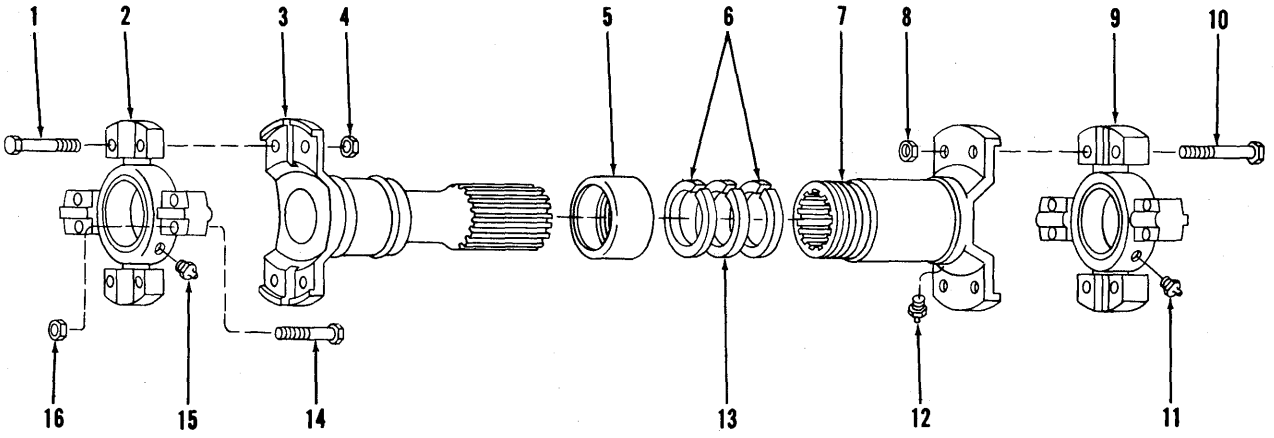

TS-1138

PROPELLER SHAFT ASSEMBLY — TRANSMISSION TO MID-MOUNT

For Serial: 425A277 & After

Item No.	Part No.	Description	No. Req'd.
A	1549490	PROP SHAFT ASSY (Inc. 1 thru 16)	1
B	947331	KIT, Dust Cap (Inc. 5, 6, 13)	1
1	947682	BOLT, Spider & Bearing to Tube	4
2	948904	SPIDER & BEARING ASSY (Inc. 15)	1
3	948906	TUBE	1
4	66D-08	NUT, Spider & Bearing to Tube	4
5	———	§RETAINER, Felt (See B)	1
6	———	§WASHER, Felt Retainer (See B)	2
7	943442	SLIP YOKE, (Inc. 12)	1
8	66D-08	NUT, Spider & Bearing to Slip Yoke	4
9	948904	SPIDER & BEARING ASSY (Inc. 11)	1
10	947682	BOLT, Spider & Bearing to Slip Yoke	4
11	710126	FITTING, Spider & Bearing Grease	1
12	10H-25	FITTING, Slip Yoke Grease	1
13	———	FELT WASHER — See "B"	1
14	947682	BOLT, Spider and Bearing Attaching	8
15	710126	FITTING, Spider & Bearing Grease	1
16	66D-08	NUT, Spider & Bearing Attaching	8

§Not Sold Separately

WHEN ORDERING PARTS, ALWAYS STATE MODEL AND SERIAL NO. OF MACHINE

https://truckmanualshub.com/

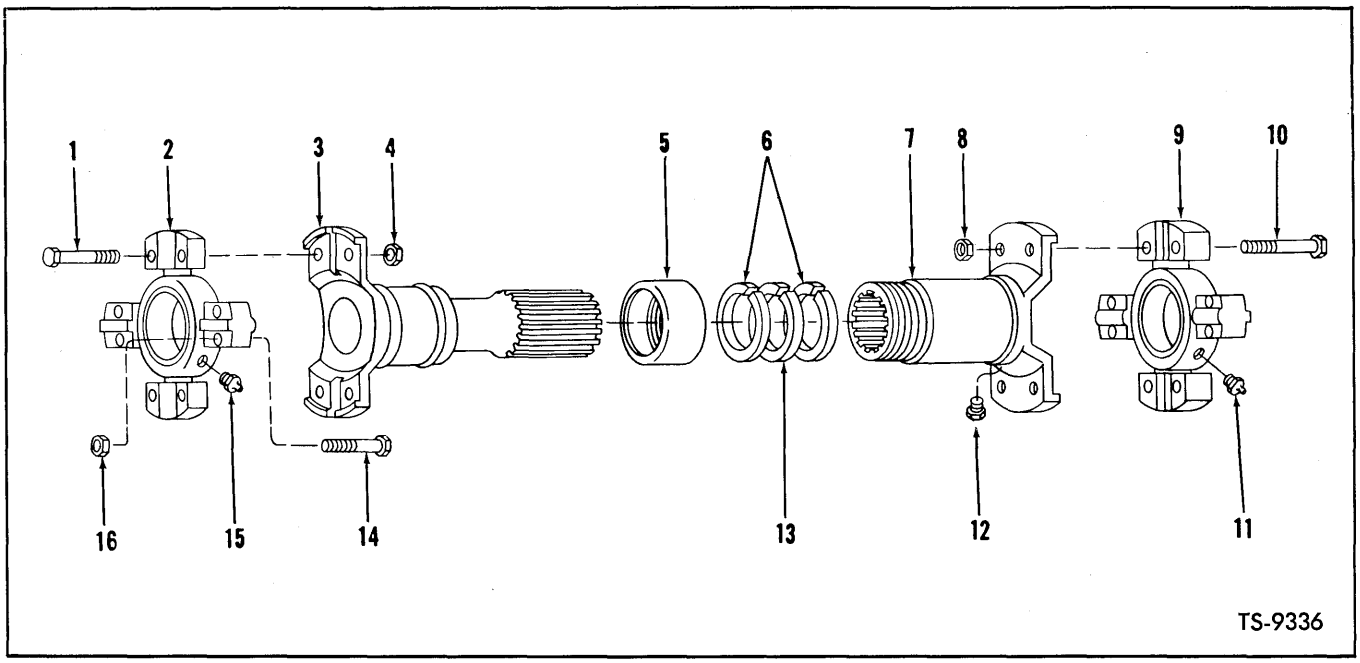

PROPELLER SHAFT ASSEMBLIES

Item No.	Mid-Mount Brg. to Front Axle	Transmission to Rear Axle	Transmission to Converter	Description	No. Req'd.
A	1539018	1537676	556432	PROP SHAFT ASSY (Inc. 1 thru 16)	1
B	947331	———	980615	KIT, Dust Cap (Inc. 5, 6, 13)	1
1	947682	947682	940229	BOLT, Spider & Bearing to Tube	4
2	943561	899602	946641	SPIDER & BEARING ASSY (Inc. 15)	1
3	948176	940257	946642	TUBE	1
4	8D-08	940227	8D-08	NUT, Spider & Bearing to Tube	4
5	943421	8D-08	See "B"	RETAINER, Felt	1
6	943431	948584	See "B"	WASHER, Felt Retainer	2
7	943442	8D-08	946643	SLIP YOKE (Inc. 12)	1
8	8D-08	940256	8D-08	NUT, Spider & Bearing to Tube	4
9	943561	899602	946641	SPIDER & BEARING ASSY (Inc. 11)	1
10	947682	947682	940229	BOLT, Spider & Bearing to Tube	4
11	710126	10H-25	10H-35	FITTING, Spider & Bearing Grease	1
12	15F-02	15F-02	15F-02	PLUG, Grease	1
13	943432	892853	See "B"	FELT WASHER	1
14	947682	947682	940229	BOLT, Spider & Bearing Attaching	8
15	710126	10H-25	10H-35	FITTING, Spider & Bearing Attaching	1
16	8D-08	8D-08	8D-08	NUT, Spider & Bearing Attaching	8

WHEN ORDERING PARTS, ALWAYS STATE MODEL AND SERIAL NO. OF MACHINE

https://truckmanualshub.com/

https://truckmanualshub.com/

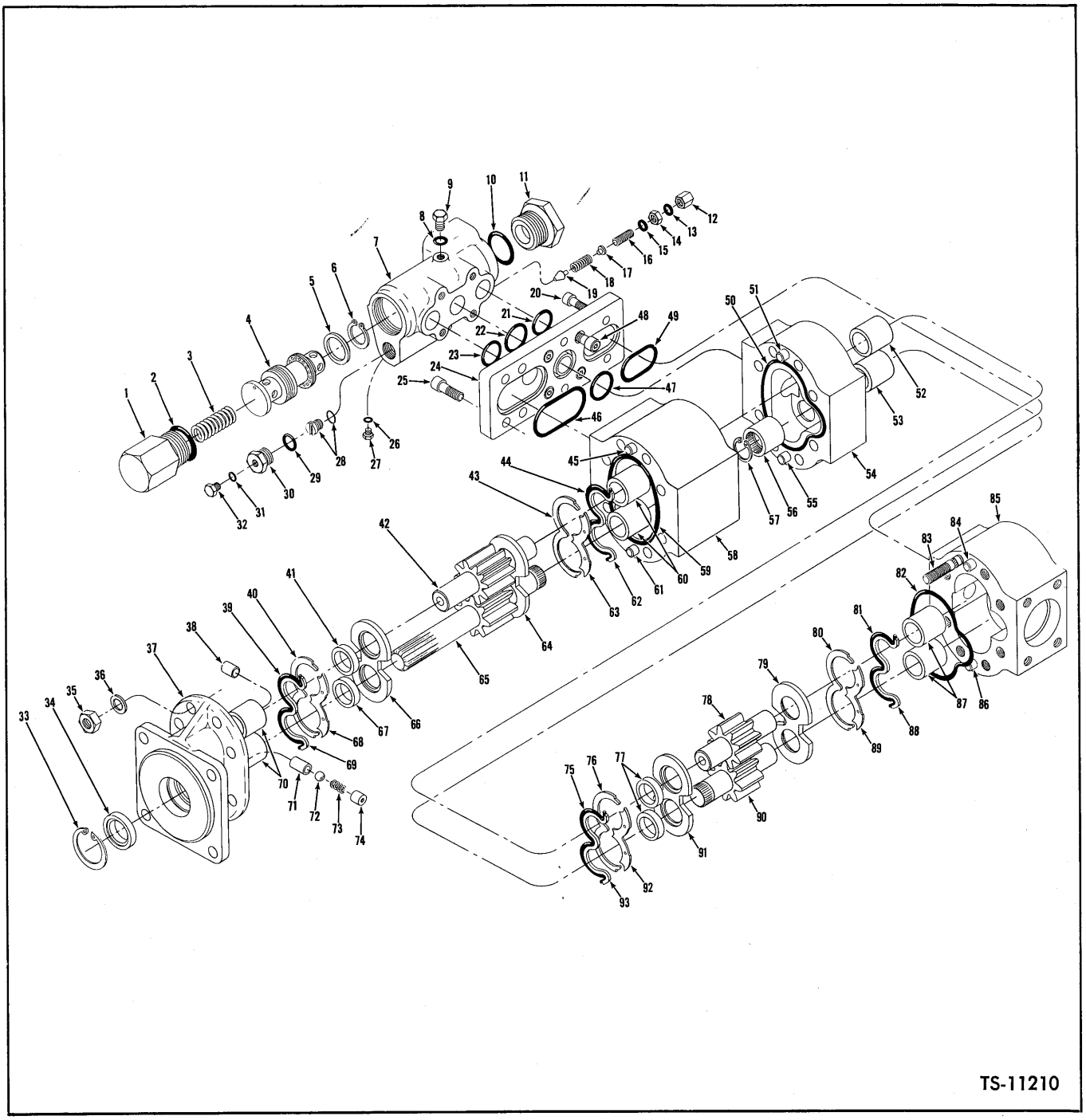

PUMP — MAIN HYDRAULIC

Item No.	Part No.	Description	No. Req'd.
A	1513226	PUMP ASSY (Inc. 1 thru 93)	1
B	949347	BODY KIT, Front (Inc. 41, 42, 45, 51, 55 thru 58, 60, 61, 65, 67)	1
C	949338	BODY KIT, Rear (Inc. 52, 53, 54, 56, 57, 77, 78, 84, 85, 86, 87, 90)	1
D	948568	KIT, Pressure Plate (Inc. 39, 40, 43, 44, 50, 59, 62, 63, 64, 66, 68, 69, 75, 76, 79 thru 82, 88, 89, 91, 92, 93)	1
E	948569	SEAL KIT, (Inc. 39, 40, 43, 44, 50, 59, 62, 69, 75, 76, 80, 81, 82, 88, 93)	1
F	949046	VALVE ASSY (Inc. 1 thru 19, 26 thru 32)	1
G	948445	REPAIR KIT (Inc. 12 thru 19, 28A, 29)	1
H	948445	REPAIR KIT (Inc. 2 thru 6, 10)	1
1	948513	CAP, Valve	1
2	91F-12	O-RING, Cap	1

WHEN ORDERING PARTS, ALWAYS STATE MODEL AND SERIAL NO. OF MACHINE

https://truckmanualshub.com/

PUMP — MAIN HYDRAULIC (Continued)

Item No.	Part No.	Description	No. Req'd.
3	948442	SPRING, Spool	1
4	948433	SPOOL, Valve	1
5	948434	VALVE, Check	1
6	9J-40	RING, Check Retaining	1
7	948707	HOUSING, Valve	1
8	91F-3	O-RING, Plug	1
9	24K-3	PLUG, Pipe	1
10	91F-12	O-RING, Cap	1
11	948436	CAP, Valve	1
12	948441	NUT, Acorn	1
13	25K-20014	O-RING, Nut	1
14	949041	NUT, Jam	1
15	25K-20014	O-RING, Nut	1
16	15G-624	SCREW, Adjusting	1
17	948437	GUIDE, Spring	1
18	1550490	SPRING, Poppet	1
19	948438	POPPET	1
20	73G-716	SCREW, Adapter to Pump	2
21	893681	O-RING, Adapter to Valve	1
22	948512	O-RING, Adapter to Valve	1
23	893681	O-RING, Adapter to Valve	1
24	948741	PLATE, Adapter	1
25	73G-716	SCREW, Adapter to Pump	4
26	91F-1	O-RING, Plug	1
27	24K-4	PLUG, Pipe	1
28	948439	SEAT, Poppet	1
28A	949040	GASKET, Seat	1
29	91F-7	O-RING, Cap	1
30	24K-7	PLUG, Relief Valve	1
31	———	OMIT	—
32	———	OMIT	—
33	661416	RING, Seal Retainer	1
34	946099	SEAL, Shaft Oil	1
35	954277	NUT, Flange to Body	8
36	946271	WASHER, Flange to Body	8
37	948451	FLANGE ASSY (Inc. 38, 70 thru 74)	1
38	———	§PLUG, Flange — See 37	—
39	———	§O-RING, See "E"	—
40	———	§RETAINER, O-Ring — See "E"	—
41	947209	RING, Spacer	1
42	———	§GEAR, Idler — See "B"	—
43	———	§RETAINER, O-Ring — See "E"	—
44	———	§O-RING — See "E"	—
45	946100	DOWEL	1
46	945313	O-RING, Adapter to Pump	1
47	25K-40114	O-RING, Adapter to Pump	1
48	11G-614	SCREW, Adapter to Valve	6
49	948514	O-RING, Adapter to Pump	1
50	———	§O-RING, Bearing Plate — See "E"	—
51	946100	DOWEL	1
52	———	*§BEARING, Sleeve — See "C"	—
53	———	*§BEARING, Sleeve — See "C"	—
54	———	§PLATE, Bearing — See "C"	—
55	946100	DOWEL	1
56	948583	COUPLING, Spline	1
57	664140	RING, Coupling Retainer	1
58	———	§BODY, Front — See "B"	—
59	947278	O-RING, Flange	1
60	———	*§BEARING, Sleeve — See "B"	—
61	946100	DOWEL	1
62	947277	RING, Back-Up	1
63	———	§PLATE, Isolation — See "D"	—
64	———	§PLATE, Pressure — See "D"	—
65	———	§GEAR, Drive — See "B"	—
66	———	§PLATE, Pressure — See "D"	—
67	947209	RING, Spacer	1
68	———	§PLATE, Isolation — See "D"	—
69	947277	RING, Back-Up	1
70	———	*§BEARING, Sleeve — See 37	—
71	———	§SEAT, Ball — See 37	—
72	———	§BALL, Check — See 37	—
73	———	§SPRING, Check — See 37	—
74	———	§RETAINER, Spring — See 37	—
75	———	§O-RING, See "E"	—
76	———	§RING, Back-Up — See "E"	—
77	947209	RING, Spacer	2
78	———	§GEAR, Idle — See "C"	—
79	———	§PLATE, Pressure — See "D"	—
80	———	§RING, Back-Up	—
81	———	§O-RING, See "E"	—
82	———	§O-RING, Bearing Plate — See "D"	—
83	948431	STUD, Pump Connecting	8
84	946100	DOWEL	1
85	———	BODY, Rear — See "C"	—
86	946100	DOWEL	1
87	———	*§BEARING, Sleeve — See "C"	—
88	947277	RING, Back-Up	1
89	———	§PLATE, Isolation — See "D"	—
90	———	§GEAR, Drive — See "C"	—
91	———	§PLATE, Pressure — See "D"	—
92	———	PLATE, Isolation — See "E"	—
93	947277	RING, Back-Up	1
94	571511	†STUD, Pump Mounting	4
95	4E-08	†LKWSHR, Pump Mounting	4
96	62D-08	†NUT, Pump Mounting	4
97	552161	†GASKET, Pump to Converter	1
98	219413	†SLEEVE, Pump Drive (Inc. 99)	1
99	———	†RING, Sleeve Retaining	1

§Not Sold Separately
†Not Illustrated
*NOTE: Pump is equipped with bushing type bearings. Bearings are machine finished after pressing in place and therefore are not replaceable service items.

WHEN ORDERING PARTS, ALWAYS STATE MODEL AND SERIAL NO. OF MACHINE

Printed in U.S.A.

https://truckmanualshub.com/

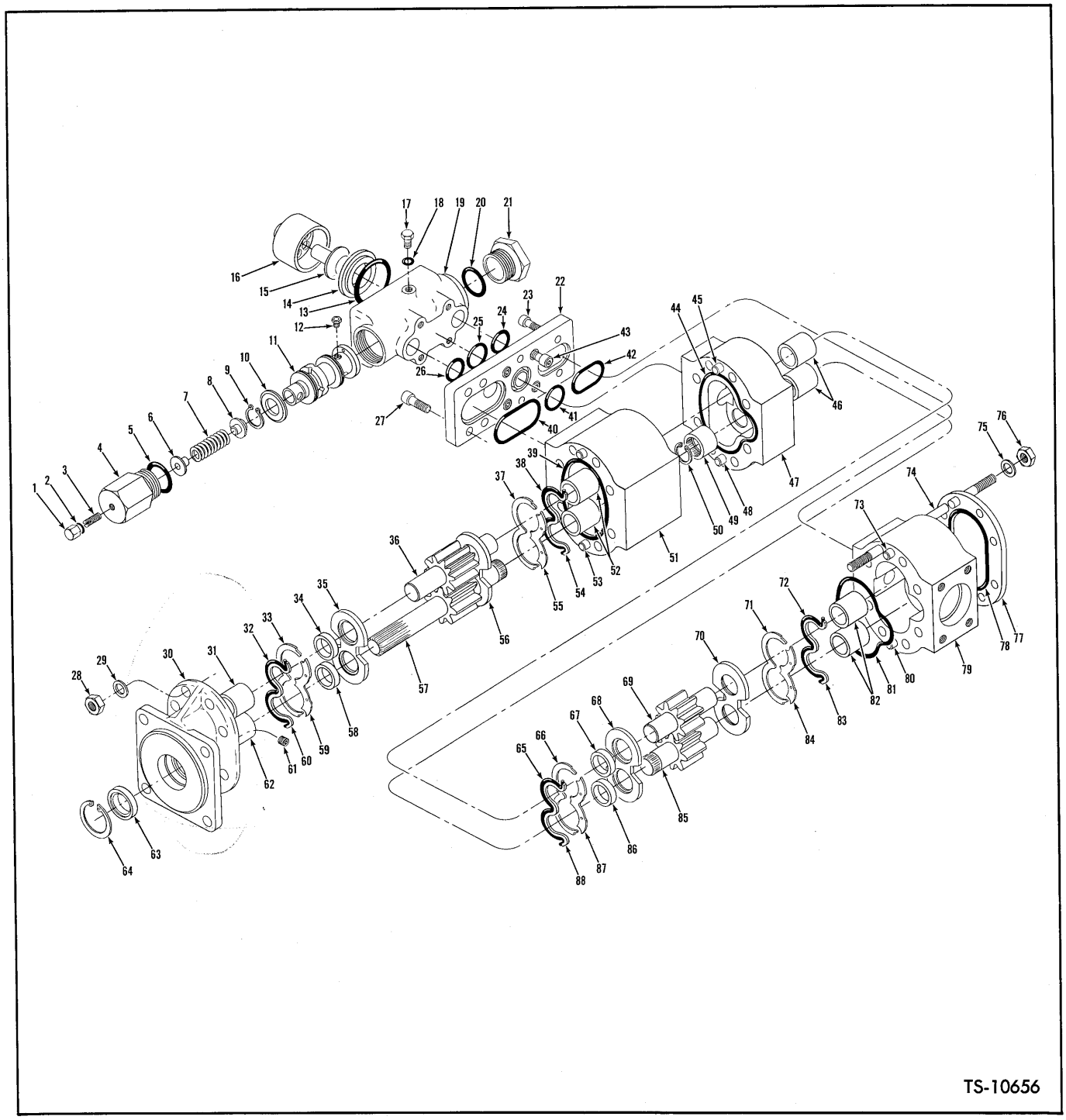

PUMP — STEERING HYDRAULIC

Item No.	Part No.	Description	No. Req'd.
A	1543435	PUMP ASSY (Inc. 1 thru 88)	1
B	948751	BODY KIT, Front (Inc. 34, 36, 39, 49, 50, 51, 52, 53, 57, 58)	1
C	948567	BODY KIT, Rear (Inc. 49, 50, 67, 69, 73, 79, 80, 82, 85)	1
D	948566	SEAL KIT (Inc. 32, 33, 39, 44, 54, 60, 63, 65, 66, 71, 72, 78, 80, 83, 88)	1
E	948565	PRESSURE PLATE KIT (Inc. 32, 33, 35, 37, 38, 39, 44, 56, 59, 65, 66, 68, 70, 71, 80, 83, 84, 87, 88)	1
F	948561	SERVICE KIT, Spool (Inc. 5, 7, 9, 11, 20)	1
G	948446	SEAL KIT, Valve Adapter (Inc. 24, 25, 26, 40, 41, 42)	1

WHEN ORDERING PARTS, ALWAYS STATE MODEL AND SERIAL NO. OF MACHINE

https://truckmanualshub.com/

PUMP — STEERING HYDRAULIC (Continued)

Item No.	Part No.	Description	No. Req'd.
1	948591	NUT, Acorn	1
2	25K-20014	O-RING, Nut	1
3	948592	SCREW, Adjusting	1
4	948582	PLUG, Valve	1
5	91F-12	O-RING, Plug	1
6	948590	RETAINER, Spring	1
7	948705	SPRING, Plunger Return	1
8	948589	RETAINER, Spring	1
9	9J-40	RING, Snap	1
10	948434	CHECK	1
11	948771	SPOOL, Valve	1
12	948595	PLUG, Orifice	1
12A	948594	†PLUG, Orifice	2
12B	948593	†PLUG, Orifice	1
13	25K-20108	O-RING, Seat	1
14	948572	SEAT, Check Valve	1
15	948571	PISTON, Check Valve	1
16	948570	RETAINER, Check Valve	1
17	24K-3	PLUG, Pipe (Inc. 18)	2
18	91F-3	O-RING, Plug	2
19	948770	HOUSING, Valve	1
20	91F-12	O-RING, Plug	1
21	948581	PLUG, Housing	1
22	948772	PLATE, Valve Adapter	1
23	73G-716	BOLT, Plate to Pump	3
24	893681	O-RING, Plate to Valve	1
25	948512	O-RING, Plate to Valve	1
26	893681	O-RING, Plate to Valve	1
27	73G-716	BOLT, Plate to Pump	3
28	954277	NUT, Pump Attaching	8
29	946271	WASHER, Pump Attaching	8
30	948562	FLANGE ASSY (Inc. 31, 61, 62)	1
31	———	§BEARING, Sleeve	—
32	———	§O-RING — See "D"	—
33	947275	RETAINER, O-Ring	1
34	947209	RING, Spacer	1
35	———	§PLATE, Pressure — See "D"	—
36	———	§GEAR, Front Idler — See "B"	—
37	947275	RETAINER, O-Ring	1
38	———	§O-RING — See "D"	—
39	947278	O-RING, Flange to Body	1
40	945313	O-RING, Pump to Adapter Plate	1
41	25K-40114	O-RING, Pump to Adapter Plate	1
42	948514	O-RING, Pump to Adapter Plate	1
43	73G-716	BOLT, Valve to Adapter Plate	6
44	———	§O-RING — See "D"	—
45	946100	DOWEL	1
46	———	§BEARING, Sleeve — See 47	—
47	948769	PLATE, Bearing	1
48	946100	DOWEL	1
49	948583	COUPLING, Spline	1
50	664140	RING, Coupling Retaining	1
51	———	§BODY, Front — See "B"	—
52	———	§BEARING, Sleeve — See "B"	—
53	946100	DOWEL	2
54	947277	RING, Back-Up	1
55	———	§PLATE, Pressure — See "E"	—
56	———	§PLATE, Pressure — See "E"	—
57	———	§GEAR, Drive — See "B"	—
58	947209	RING, Spacer	1
59	———	§PLATE, Pressure — See "E"	—
60	947277	RING, Back-Up	1
61	———	§PLUG, Cover — See 30	—
62	———	§BEARING, Sleeve — See 30	—
63	946099	SEAL, Cover	1
64	661416	RING, Seal Retaining	1
65	———	§O-RING — See "D"	—
66	947275	RETAINER, O-Ring	1
67	947209	RING, Spacer	1
68	———	§PLATE, Pressure — See "E"	—
69	———	§GEAR, Idler — Rear — See "C"	—
70	———	§PLATE, Pressure — See "E"	—
71	947275	RETAINER, O-Ring	1
72	———	§O-RING — See "D"	—
73	946100	DOWEL	1
74	948573	STUD, Pump Connecting	8
75	946271	WASHER, Pump Connecting	8
76	954277	NUT, Pump Connecting	8
77	947208	PLATE, Cover	1
78	25K-40328	O-RING, Cover	1
79	———	BODY, Rear — See "C"	—
80	946100	DOWEL	1
81	———	§O-RING — See "D"	—
82	———	§BEARING, Sleeve — Rear — See "C"	—
83	947277	RING, Back-Up	1
84	———	§PLATE, Pressure — See "E"	—
85	———	GEAR, Drive — Rear — See "C"	—
86	947209	RING, Spacer	1
87	———	PLATE, Pressure — See "E"	—
88	947277	RING, Back-Up	1
89	571511	†STUD, Pump Mounting	4
90	4E-08	†LKWSHR, Pump Mounting	4
91	62D-08	†NUT, Pump Mounting	4
92	552161	†GASKET, Pump to Converter	1
93	219413	†SLEEVE, Drive	1

†Not Illustrated
§Not Sold Separately
NOTE: Pump is equipped with Bushing Type Bearings. Bearings are machine finished after pressing in place and therefore are not replaceable service items.

WHEN ORDERING PARTS, ALWAYS STATE MODEL AND SERIAL NO. OF MACHINE

https://truckmanualshub.com/

https://truckmanualshub.com/

"R" GROUP

CONTENTS

Radiator Assembly ..... R 2

Radiator Connections ..... R 4

https://truckmanualshub.com/

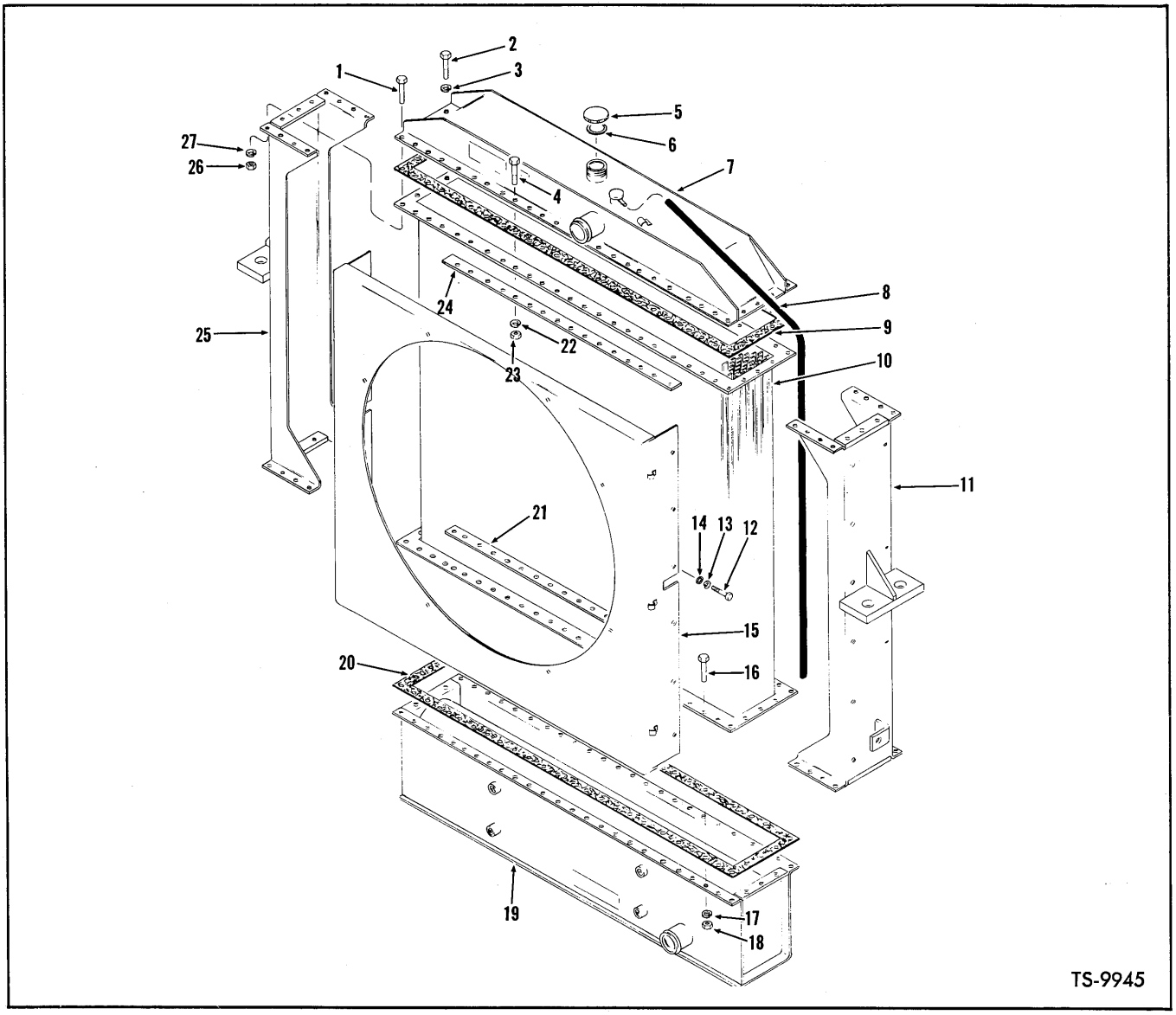

RADIATOR ASSEMBLY

For Serial: 425A101 thru 246

Item No.	Part No.	Description	No. Req'd.
A	1545123	RADIATOR ASSY (Inc. 1 thru 27)	1
1	1C-616	BOLT, Tank to Core	24
2	1C-616	BOLT, Tank to Core	12
3	4E-06	LKWSHR, Tank to Core	12
4	1C-616	BOLT, Tank to Core	16
5	539195	CAP, Radiator (Inc. 6)	1
6	539318	GASKET, Radiator Cap	1
7	948530	TOP TANK (Inc. 7A)	1
7A	945782	†VALVE, Pressure Relief	1
8	945460	HOSE, Overflow	1
9	948534	GASKET, Top Tank to Core	1
10	948533	CORE	1
11	947798	SIDE MEMBER — L.H.	1
12	1C-512	BOLT, Shroud to Side Member	12
13	4E-05	LKWSHR, Shroud to Side Member	12
14	655630	WASHER, Shroud to Side Member	12
15	948531	SHROUD, Radiator	1
16	1C-618	BOLT, Tank to Core	52
17	4E-06	LKWSHR, Tank to Core	52
18	1D-06	NUT, Tank to Core	52
19	948532	BOTTOM TANK	1
20	948535	GASKET, Bottom Tank to Core	1
21	948536	HEADER BAR	2
22	4E-06	LKWSHR, Tank to Core	16
23	1D-06	NUT, Tank to Core	16
24	948536	HEADER BAR	2
25	947797	SIDE MEMBER — R.H.	1
26	1D-06	NUT, Tank to Core	12
27	4E-06	LKWSHR, Tank to Core	20

†Not Illustrated

WHEN ORDERING PARTS, ALWAYS STATE MODEL AND SERIAL NO. OF MACHINE

https://truckmanualshub.com/

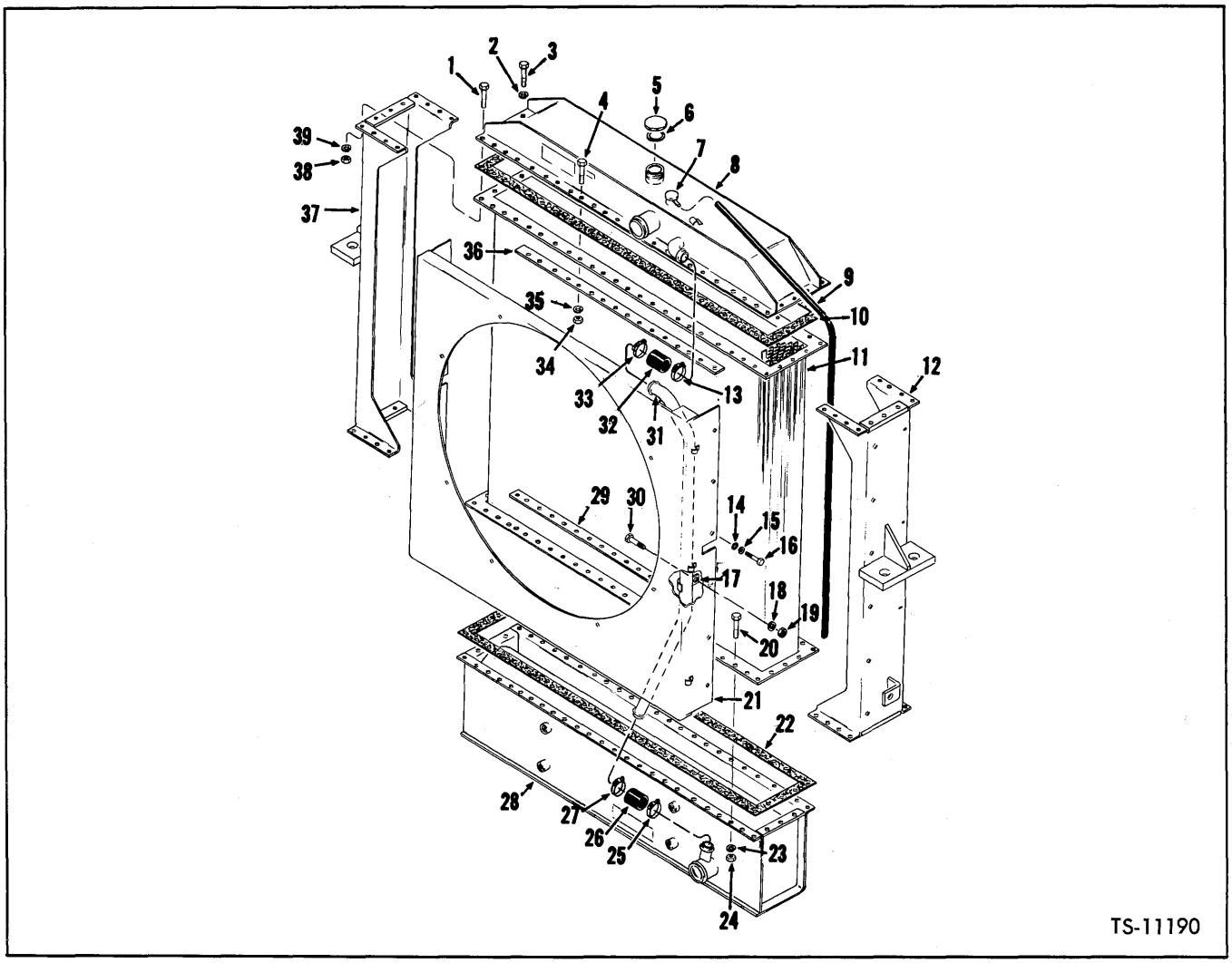

RADIATOR ASSEMBLY

For Serial: 425A247 & After

Item No.	Part No.	Description	No. Req'd.
A	1510492	RADIATOR ASSY (Inc. 1 thru 39)	1
1	1C-616	BOLT, Tank to Core	24
2	4E-06	LKWSHR, Tank to Core	12
3	1C-616	BOLT, Tank to Core	12
4	1C-616	BOLT, Tank to Core	16
5	539195	CAP, Radiator (Inc. 6)	1
6	539318	GASKET, Radiator Cap	1
7	945782	VALVE, Radiator Pressure	1
8	949068	TOP TANK (Inc. 7)	1
9	945460	HOSE, Overflow	1
10	948534	GASKET, Top Tank to Core	1
11	948533	CORE	1
12	949069	SIDE MEMBER — L.H.	1
13	949074	CLAMP, Hose to Tank	1
14	655630	WASHER, Shroud to Side Member	12
15	4E-05	LKWSHR, Shroud to Side Member	12
16	1C-514	BOLT, Shroud to Side Member	12
17	949075	CLIP, Tube to Shroud	1
18	17E-6	LKWSHR, Clip to Shroud	1
19	1D-04	NUT, Clip to Shroud	1
20	1C-618	BOLT, Tank to Core	52
21	949071	SHROUD, Radiator	1
22	948535	GASKET, Core to Tank	1
23	4E-06	LKWSHR, Core to Tank	52
24	1D-06	NUT, Core to Tank	52
25	949074	CLAMP, Hose to Tank	1
26	949073	HOSE, Tube to Tank	1
27	949074	CLAMP, Hose to Tube	1
28	949076	BOTTOM TANK	1
29	948536	HEADER BAR	2
30	1C-410	BOLT, Clip to Shroud	1
31	949072	TUBE	1
32	949073	HOSE, Tube to Tank	1
33	949074	CLAMP, Hose to Tube	1
34	1D-06	NUT, Tank to Core	16
35	1E-06	LKWSHR, Tank to Core	16
36	948536	HEADER BAR	2
37	949070	SIDE MEMBER — R.H.	1
38	1D-06	NUT, Tank to Core	12
39	1E-06	LKWSHR, Tank to Core	20

WHEN ORDERING PARTS, ALWAYS STATE MODEL AND SERIAL NO. OF MACHINE

https://truckmanualshub.com/

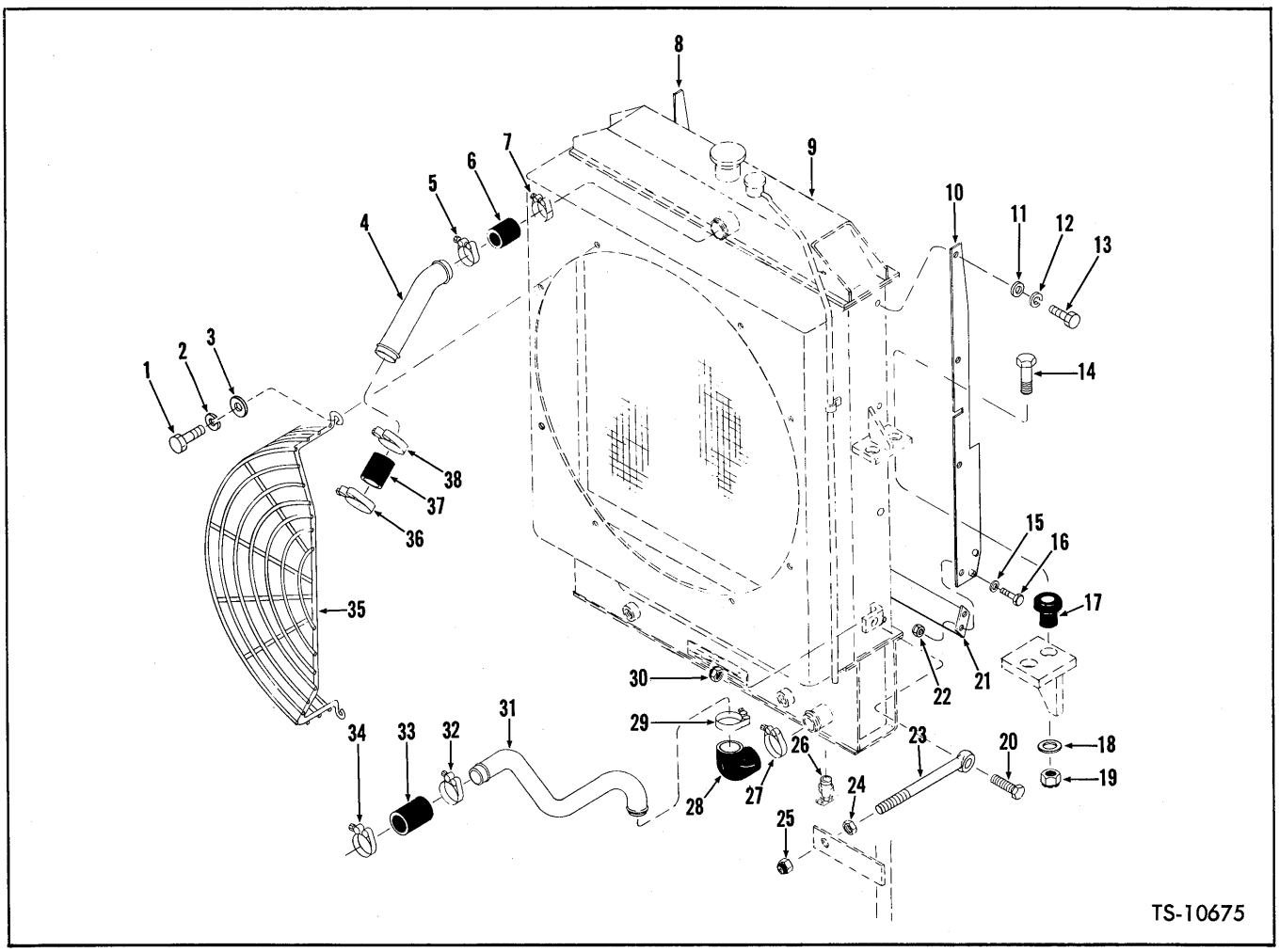

RADIATOR CONNECTIONS

For Serial: 425A101 thru 246

Item No.	Part No.	Description	No. Req'd.
1	24C-616	BOLT, Fan Guard Attaching	8
2	4E-06	LKWSHR, Fan Guard Attaching	8
3	103293	WASHER, Fan Guard Attaching	8
4	1545114	TUBE, Radiator to Engine — Upper	1
5	540104	CLAMP, Hose to Tube	1
6	1M-18040	HOSE, Tube to Radiator	1
7	540104	CLAMP, Hose to Radiator	1
8	1545115	SHROUD, Side — L.H.	1
9	———	RADIATOR — See Index	—
10	1545115	SHROUD, Side — R.H.	1
11	619018	WASHER, Shroud to Radiator	8
12	4E-04	LKWSHR, Shroud to Radiator	8
13	23C-412	BOLT, Shroud to Radiator	8
14	24C-1056	BOLT, Radiator to Frame Bracket	4
15	619018	WASHER, Shroud to Bottom Plate	8
16	24C-412	BOLT, Shroud to Bottom Plate	4
17	1527276	MOUNT, Radiator to Frame — Rubber	4
18	569070	WASHER, Radiator to Frame Bracket	4
19	18D-10	NUT, Radiator to Frame Bracket	4
20	24C-828	BOLT, Rod to Radiator Bracket	2
21	1545113	PLATE, Bottom Shroud	1
22	18D-04	NUT, Shroud to Bottom Plate	2
23	1549587	ROD, Radiator Support	2
24	8D-08	NUT, Rod Jam	2
25	18D-08	NUT, Rod to Frame Bracket	2
26	72F-2	DRAIN COCK	2
27	540104	CLAMP, Hose to Radiator	2
28	537473	HOSE, Tube to Radiator — Lower	1
29	540104	CLAMP, Hose to Tube	1
30	18D-08	NUT, Rod to Radiator Bracket	2
31	1545116	TUBE, Radiator to Engine — Lower	1
32	540104	CLAMP, Hose to Tube	1
33	1M-18040	HOSE, Tube to Engine	1
34	540104	CLAMP, Hose to Tube	1
35	1547894	GUARD, Fan	1
35A	1510064	†STIFFENER, Fan Guard	1
35B	24C-628	†BOLT, Fan Guard to Stiffener	1
35C	656672	†WASHER, Fan Guard to Stiffener	1
35D	18D-06	†NUT, Fan Guard to Stiffener	1
36	540104	CLAMP, Hose to Engine	1
37	1M-18040	HOSE, Tube to Engine	1
38	540104	CLAMP, Hose to Tube	1

†Not Illustrated

WHEN ORDERING PARTS, ALWAYS STATE MODEL AND SERIAL NO. OF MACHINE

https://truckmanualshub.com/

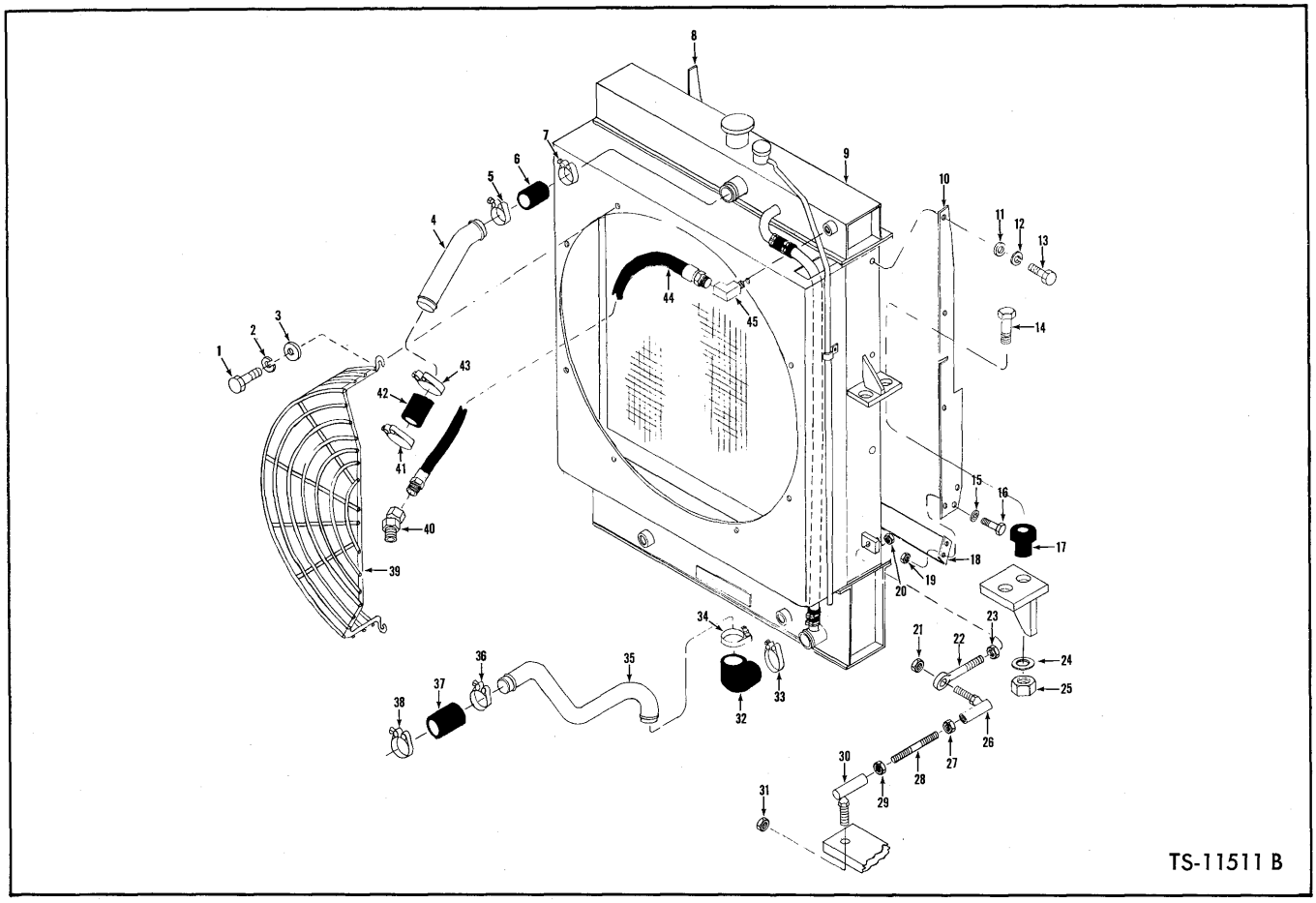

RADIATOR CONNECTIONS

For Serial: 425A247 & After

Item No.	Part No.	Description	No. Req'd.
1	24C-616	BOLT, Fan Guard Attaching	8
2	4E-06	LKWSHR, Fan Guard Attaching	8
3	103293	WASHER, Fan Guard Attaching	8
4	1545114	TUBE, Radiator to Engine — Upper	1
5	540104	CLAMP, Hose	1
6	1M-18040	HOSE, Tube to Radiator	1
7	540104	CLAMP, Hose	1
8	1545115	SHROUD, Side — L.H.	1
9	————	RADIATOR — See Index	—
9A	72F-2	†DRAIN COCK	2
10	1545115	SHROUD, Side — R.H.	1
11	619018	WASHER, Shroud to Radiator	8
12	4E-04	LKWSHR, Shroud to Radiator	8
13	24C-412	BOLT, Shroud to Radiator	8
14	24C-1056	BOLT, Radiator to Frame	4
15	619018	WASHER, Shroud to Bottom Plate	8
16	24C-412	BOLT, Shroud to Bottom Plate	4
17	1527276	MOUNT, Rubber — Radiator to Frame	4
18	1545113	PLATE, Bottom Shroud	1
19	18D-04	NUT, Shroud to Bottom Plate	4
20	18D-08	NUT, Rod to Radiator	2
21	66D-08	NUT, Ball Joint to Rod End	2
22	523199	ROD, Radiator Support	2
23	8D-08	NUT, Rod Jam	2
24	569070	WASHER, Radiator to Frame	4
25	18D-10	NUT, Radiator to Frame	4
26	1301363	JOINT, Ball	2
27	8D-08	NUT, Jam	2
28	663975	ROD, Threaded Adjusting	2
29	8D-08	NUT, Jam	2
30	1301363	JOINT, Ball	2
31	66D-08	NUT, Ball Joint to Frame	2
32	537473	HOSE, Tube to Radiator — Lower	1
33	540104	CLAMP, Hose	1
34	540104	CLAMP, Hose	1
35	1510505	TUBE, Radiator to Engine — Lower	1
36	540104	CLAMP, Hose	1
37	1M-18040	HOSE, Tube to Engine	1
38	540104	CLAMP, Hose	1
39	1510774	GUARD, Fan — L.H.	1
39A	1510775	†GUARD, Fan — R.H.	1
40	33F-1	ADAPTER, Hose to Engine	1
41	540104	CLAMP, Hose	1
42	1M-18040	HOSE, Tube to Engine	1
43	540104	CLAMP, Hose	1
44	538753	HOSE, Top Tank to Thermostat Housing	1
45	29F-1	ELBOW, Hose to Top Tank	1

†Not Illustrated

WHEN ORDERING PARTS, ALWAYS STATE MODEL AND SERIAL NO. OF MACHINE

https://truckmanualshub.com/

https://truckmanualshub.com/

"S" GROUP

CONTENTS

Seat, Belt & Support Parts ..... S 2

Steering Group:

- Steering Drag Link ..... S 3
- Steering Gear Assembly ..... S 5
- Steering Gear Mounting Group ..... S 6

https://truckmanualshub.com/

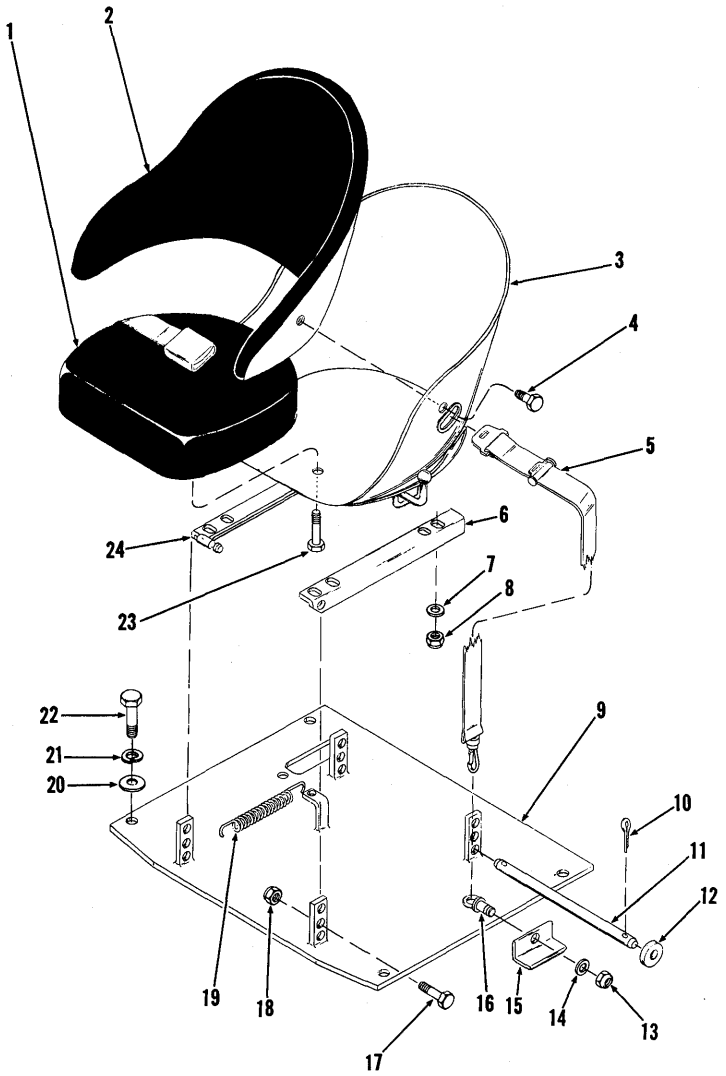

TS-10922

SEAT, BELT & SUPPORT PARTS

Item No.	Part No.	Description	No. Req'd.
A	1572355	SEAT ASSY, Bucket (Inc. 1, 2, 3, 4 & 23)	1
B	1527816	BELT KIT, Seat (Inc. 5, 13, 14, 15 & 16)	1
1	944499	CUSHION, Seat	1
2	944981	CUSHION, Back Rest	1
3	944982	BUCKET, Seat	1
4	1C-610	BOLT, Cushion Mounting	3
5	1527745	BELT ASSY, Seat (Inc. 13, 14 & 16)	1
6	558779	ANGLE, Left Hand	1
7	619019	WASHER, Seat Mounting	4
8	18D-05	NUT, Seat Mounting	4
9	568781	SUPPORT, Seat	1
10	1F-420	COTTER, Seat Mounting Bar	2
11	557458	BAR, Seat Mounting	1
12	664406	WASHER, Seat Mounting Bar	2
13	———	§NUT, Seat Belt Eyebolt — See "B"	2
14	———	§WASHER, Seat Belt Eyebolt — See "B"	2
15	1547302	ANGLE, Seat Belt Connection	2
16	———	§EYEBOLT, Seat Belt — See "B"	2
17	24C-824	BOLT, Seat Pivot	2
17A	584092	†WASHER, Seat Pivot	2
18	18D-08	NUT, Seat Pivot	2
19	550301	SPRING, Seat	1
20	619029	WASHER, Seat Support to Frame	4
21	4E-08	LKWSHR, Seat Support to Frame	4
22	23C-820	BOLT, Seat Support to Frame	4
23	1C-610	BOLT, Cushion Mounting	1
24	558777	ANGLE, Right Hand	1

§Not Sold Separately
†Not Illustrated

WHEN ORDERING PARTS, ALWAYS STATE MODEL AND SERIAL NO. OF MACHINE

https://truckmanualshub.com/

STEERING GEAR ASSEMBLY

Item No.	Part No.	Description	No. Req'd.
A	1529890	STEERING GEAR ASSY (Inc. 1 thru 31, 34 thru 62, 64 thru 67)	1
1	850756	NUT, Pitman Arm	1
2	4E-18	LKWSHR, Pitman Arm	1
3	853391	SEAL, Pitman Shaft Grease	1
4	853357	BUSHING, Pitman Shaft	1
5	91F-6	"O" RING	1
6	946601	PLUNGER, Relief Valve	1
7	946609	WASHER, Relief Valve	1
8	946606	SPRING, Relief Valve — Inner	1
9	946605	SEAT, Relief Valve Spring	1
10	946608	WASHER, Adjusting Screw Nut	1
11	946603	SCREW, Adjusting	1
12	946602	SCREW, Bleeder	1
13	66D-12	NUT, Adjusting Screw	1
14	946599	HOUSING, Relief Valve	1
15	946607	SPRING, Relief Valve — Outer	1
16	25K-40108	"O" RING	1
17	946598	GUIDE, Plunger	1
18	946604	SEAT, Plunger	1
19	946834	*VALVE, Relief (Inc. 5 thru 18, 55, 56, 57)	1
20	73G-728	BOLT, Adapter to Housing	4
20A	4E-07	†LKWSHR, Adapter to Housing	4
21	944186	ADAPTER, Valve to Housing (Inc. 49, 50)	1
22	886851	"O" RING, Spacer to Adapter	1
23	853380	GASKET, Adapter to Housing	1
24	851762	BOLT & WASHER ASSY, Clamp	3
25	853527	CLAMP, Ball Return Guide	1
26	25F-4	ELBOW, Filler	1
27	5K-432	PIPE, Filler	1
28	22F-4	CAP, Filler Pipe	1
29	857729	BEARING, Upper	1
30	861768	WASHER, Upper Bearing	1
31	853395	SPRING, Upper Bearing	1
32	518331	WHEEL, Steering	1
33	1511710	PLATE, Operating Precaution	1
33A	65G-406	†SCREW, Plate Attaching	4
34	648304	NUT, Steering Wheel to Shaft	1
35	853384	KEY, Steering Shaft	1
36	946138	HOUSING ASSY (Inc. 4, 37)	1
37	730143	BEARING, Steering Housing	1
38	10J-09	BALL	106
38A	853526	†GUIDE, Ball Return	4
39	853525	NUT, Ball	1
40	4E-06	LKWSHR, Side Cover	3
41	1C-612	BOLT, Side Cover	3
42	853182	COVER, Housing Side (Inc. 46)	1
43	853187	SHIM KIT, Lash Adjuster	1
44	8D-07	NUT, Lash Adjuster	1
45	851770	ADJUSTER, Lash	1
46	———	§BUSHING, Side Cover — See Item 42	—
47	851756	GASKET, Side Cover	1
48	940111	GEAR, Pitman Shaft	1
49	861741	BEARING, Adapter	1
50	25K-40108	"O" RING, Adapter	1
51	860997	BEARING, Worm Thrust	1
52	943438	WASHER, Worm Thrust	1
53	1306626	"O" RING, Valve to Spacer	1
54	944197	SPACER, Valve	1
55	———	§SPOOL, Valve — See Item 19	1
56	944195	SPRING, Centering	2
57	944192	PLUNGER	4
58	943438	WASHER, Bearing Thrust	1
59	1306626	"O" RING, End Cover	1
60	860997	BEARING, Worm Thrust	1
61	3E-09	LKWSHR, End Cover	4
62	944198	BOLT, End Cover	4
63	1525483	ARM, Pitman	1
64	944667	COVER, Steering Gear End	1
65	946437	SHAFT ASSY (Inc. 24, 25, 38, 38A, 39)	1
66	873250	NUT, Worm Bearing	1
67	25K-30118	"O" RING	1

†Not Illustrated
§Not Sold Separately
*Shown out of position.

WHEN ORDERING PARTS, ALWAYS STATE MODEL AND SERIAL NO. OF MACHINE

https://truckmanualshub.com/

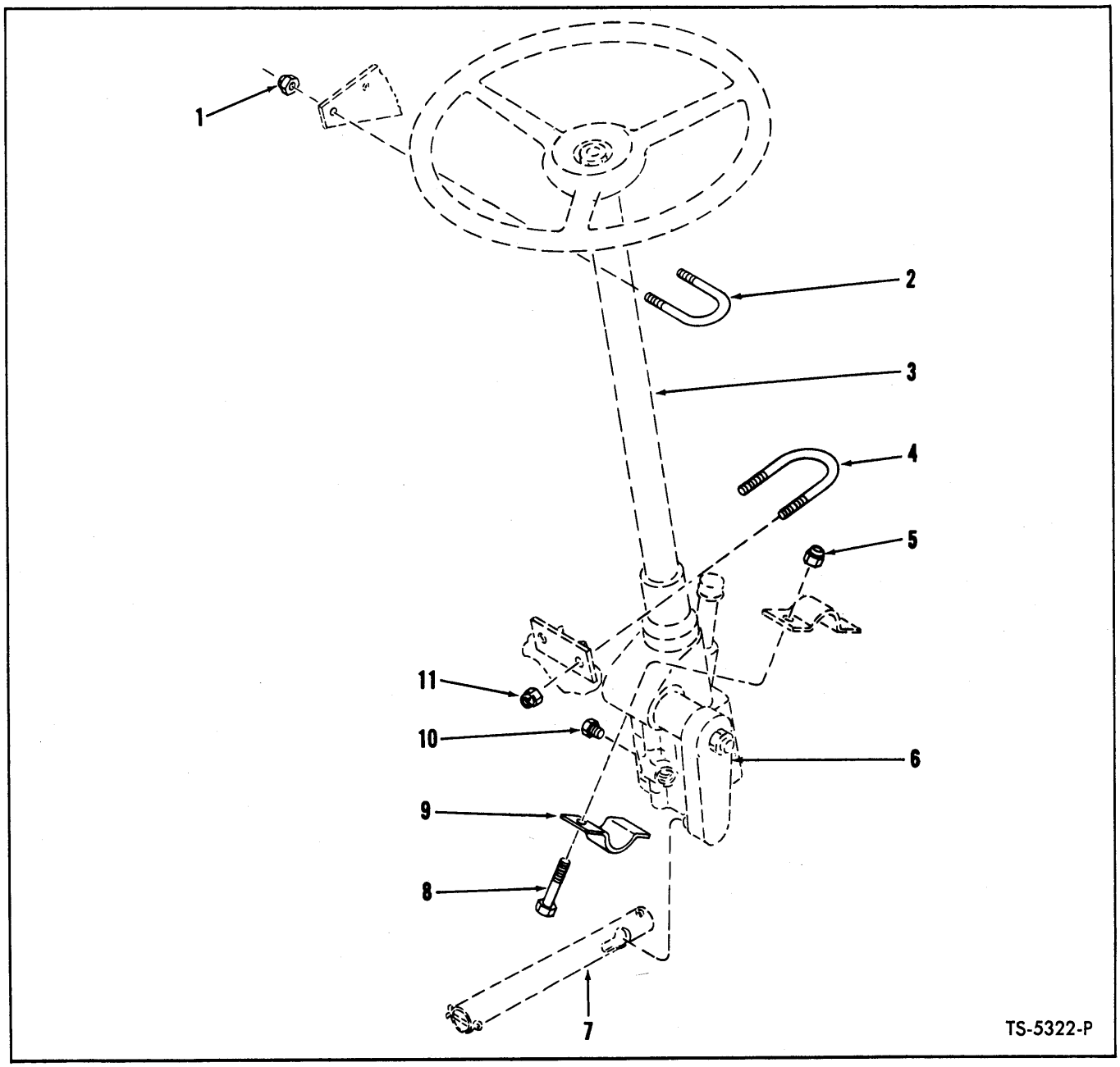

STEERING GEAR MOUNTING GROUP

Item No.	Part No.	Description	No. Req'd.
1	18D-06	NUT, "U" Bolt	2
2	571441	"U" BOLT, Steering Gear to Cockpit	1
3	————	STEERING GEAR ASSY — See Index	—
4	545941	"U" BOLT, Steering Gear to Cockpit	1
5	18D-08	NUT, Steering Gear Clamp	2
6	————	PITMAN ARM — See Index	—
7	————	DRAG LINK — See Index	—
8	18C-836	BOLT, Steering Gear Clamp	2
9	550044	CLAMP, Steering Gear	1
10	40K-02	PLUG, Steering Valve	1
11	18D-08	NUT, "U" Bolt	2

WHEN ORDERING PARTS, ALWAYS STATE MODEL AND SERIAL NO. OF MACHINE

https://truckmanualshub.com/

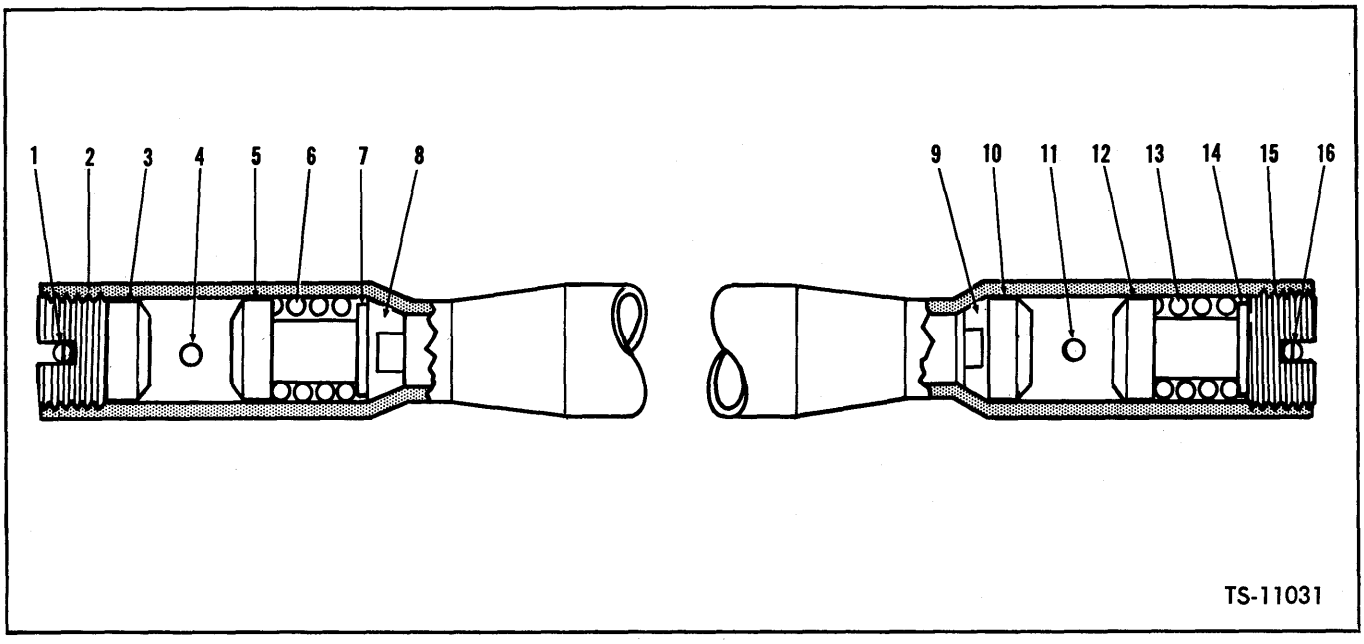

STEERING DRAG LINK

Item No.	Part No.	Description	No. Req'd.
A	569509	DRAG LINK ASSY (Inc. 2, 3, 5 thru 10, 12 thru 15)	1
1	1F-432	COTTER	1
2	876575	PLUG, Adjusting	1
3	865965	SEAT, Ball Stud	1
4	12H-15	FITTING, Grease	1
5	865965	SEAT, Ball Stud	1
6	865961	SPRING	1
7	662691	SEAT, Spring	1
8	865963	SEAT	1
9	865963	SEAT	1
10	865965	SEAT, Ball Stud	1
11	10H-25	FITTING, Grease	1
12	865965	SEAT, Ball Stud	1
13	865961	SPRING	1
14	662691	SEAT, Spring	1
15	876575	PLUG, Adjusting	1
16	1F-432	COTTER	1

WHEN ORDERING PARTS, ALWAYS STATE MODEL AND SERIAL NO. OF MACHINE

https://truckmanualshub.com/

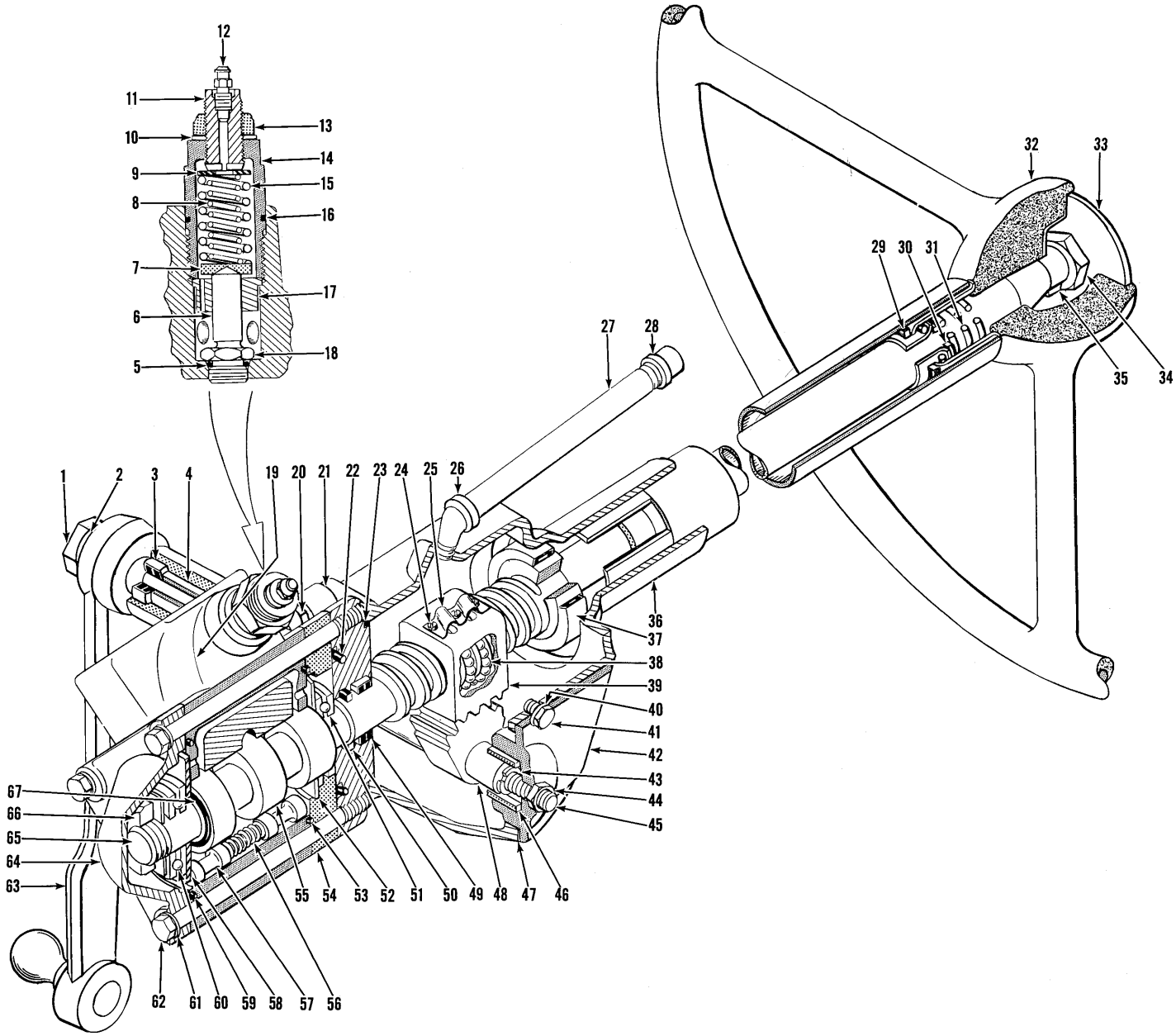

STEERING GEAR ASSEMBLY

TS-10926

https://truckmanualshub.com/

"T" GROUP

CONTENTS

Transmission Group:

Transmission Assembly and Clutch Cover Group ..... T 2
Transmission Case and Internal Tubing ..... T 3
Transmission Control Cover Assembly ..... T 4
Transmission Controls ..... T 5
Transmission First and Second Clutch Group ..... T 6
Transmission First and Third Shaft Group ..... T 7
Transmission Idler Shaft Group ..... T 8
Transmission Input Shaft Group ..... T 9
Transmission Input-Reverse, Third and Fourth Clutch Group ..... T 10
Transmission Output Shaft Group ..... T 11
Transmission Reverse Shaft Group ..... T 12
Transmission Second and Fourth Shaft Group ..... T 13

https://truckmanualshub.com/

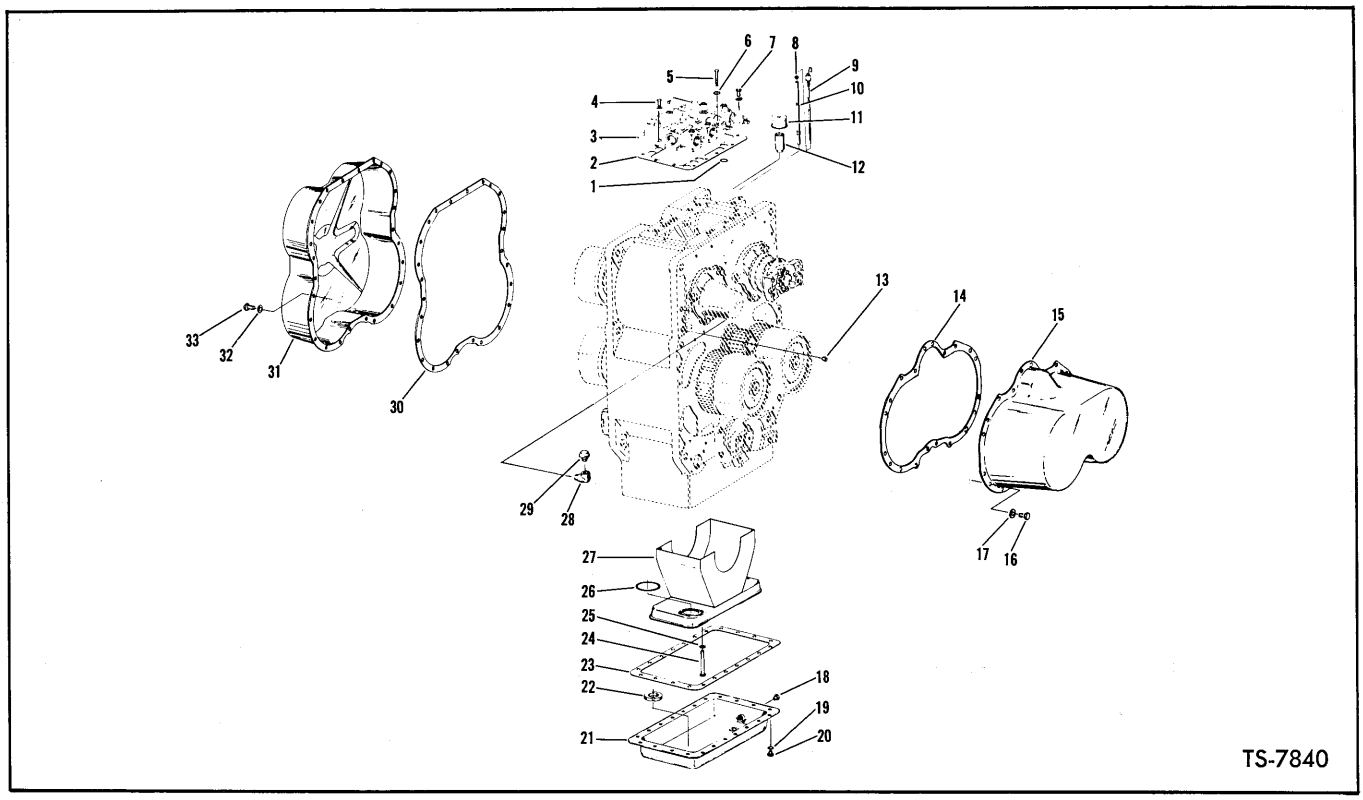

TRANSMISSION ASSEMBLY & CLUTCH COVER GROUP

Item No.	Part No.	Description	No. Req'd.
A	283248	*TRANSMISSION ASSY 5421-23	
		***Transmission Assembly includes items 1 thru 33**	
1	25K-40026	O-RING, Valve to Case	6
2	217653	GASKET, Valve to Case	1
3	———	TRANS., Control Cover Assy — See Index	—
4	1C-616	BOLT, Valve to Case	4
4A	4E-06	†LKWSHR, Valve to Case	4
5	1C-624	BOLT, Valve to Case	2
6	4E-06	†LKWSHR, Valve to Case	2
7	1C-640	BOLT, Valve to Case	6
7A	4E-06	†LKWSHR, Valve to Case	6
8	92F-7	FITTING, Dipstick Tube	1
9	———	DIPSTICK — See Trans. & Torque Converter Hydraulic System	—
10	230606	TUBE, Dipstick — Inner	1
11	———	Not Used This Application — See Trans. & Torque Converter Hydraulic System	—
12	———	Not Used This Application — See Trans. & Torque Converter Hydraulic System	—
13	13F-12	PLUG, Drain	1
14	217713	GASKET, Clutch Cover	1
15	217712	COVER, 1st & 2nd Clutch	1
16	5C-612	BOLT & LKWSHR, Clutch Cover (Inc. 17)	20
17	———	§LKWSHR, Clutch Cover — See 16	—
18	13F-12	PLUG, Oil Sump Drain	1
19	———	§LKWSHR, Oil Sump — See 20	—
20	5C-612	BOLT & LKWSHR, Oil Sump (Inc. 19)	18
21	217562	SUMP ASSY, Oil	1
22	525293	MAGNET, Sump	2
23	217563	GASKET, Oil Sump	1
24	1C-636	BOLT, Frame & Screen to Case	3
25	4E-06	LKWSHR, Frame & Screen to Case	3
26	218376	GASKET, Oil Sump Frame	1
27	218358	FRAME & SCREEN ASSY — Oil Sump	1
28	26F-3	ELBOW, Air Breather	1
29	211433	BREATHER, Air	1
30	217620	GASKET, Clutch Cover	1
31	217619	COVER, Fwd. & Rev., 3rd & 4th Clutch	1
32	———	§LKWSHR, Clutch Cover — See 33	—
33	5C-612	BOLT & LKWSHR, Clutch Cover (Inc. 32)	25

†Not Illustrated
§Not Sold Separately

WHEN ORDERING PARTS, ALWAYS STATE MODEL AND SERIAL NO. OF MACHINE

https://truckmanualshub.com/

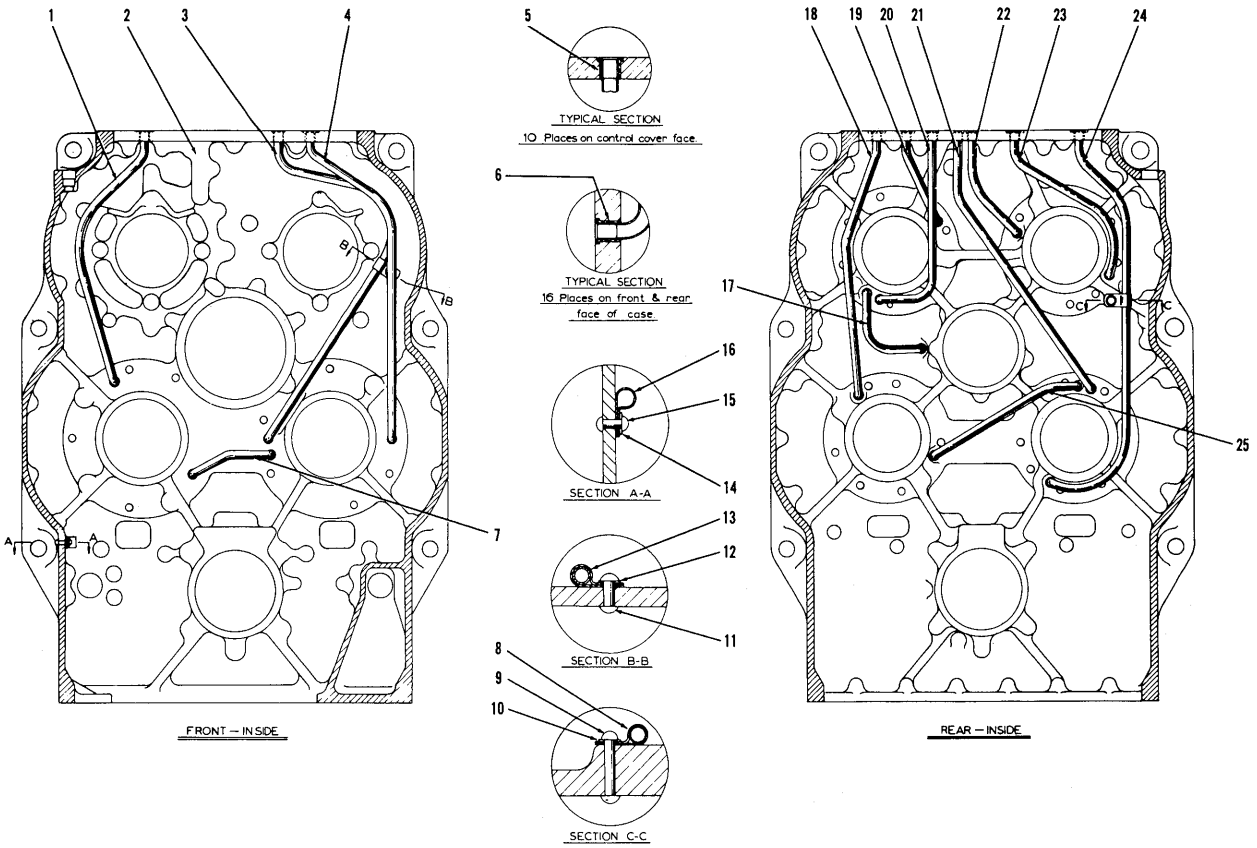

5000 SERIES CASE ASSEMBLY

TS-7839-P

TRANSMISSION CASE AND INTERNAL TUBING

Item No.	Part No.	Description	No. Req'd.
1	217708	*TUBE, 1st Clutch Pressure	1
2	217572	CASE ASSY, Trans. (Inc. 1 thru 25)	1
3	217710	*TUBE, 2nd Clutch Lube	1
4	217709	*TUBE, 2nd Clutch Pressure	1
5	222067	SLEEVE, Tube	8
6	222067	SLEEVE, Tube	18
7	217698	*TUBE, 2nd to 1st X-Over Lube	1
8	6H-29	CLIP, Tube	1
9	1H-534	RIVET, Clip to Case	1
10	619019	WASHER, Clip to Case	1
11	1H-518	RIVET, Clip to Case	1
12	619019	WASHER, Clip to Case	1
13	6H-29	CLIP, Tube	1
14	619018	WASHER, Clip to Case	1
15	1H-414	RIVET, Clip to Case	1
16	6H-32	CLIP, Dipstick Tube	1
17	217704	*TUBE, Reverse to Idler X-Over Lube	1
18	217706	*TUBE, 4th Clutch Pressure	1
19	217699	*TUBE, Reverse Clutch Pressure	1
20	217703	*TUBE, Reverse Clutch Lube	1
21	217707	*TUBE, 3rd Clutch Lube	1
22	217701	*TUBE, Input Lube	1
23	217700	*TUBE, Input Clutch Pressure	1
24	217705	*TUBE, 3rd Clutch Pressure	1
25	217702	*TUBE, 3rd to 4th X-Over Lube	1

*NOTE: Use two 222067 sleeve (Item 5 or 6) when replacing any of the above tubes, one at each end of tube. Use 943374 Tube Expander to expand tube into sleeve.

WHEN ORDERING PARTS, ALWAYS STATE MODEL AND SERIAL NO. OF MACHINE

https://truckmanualshub.com/

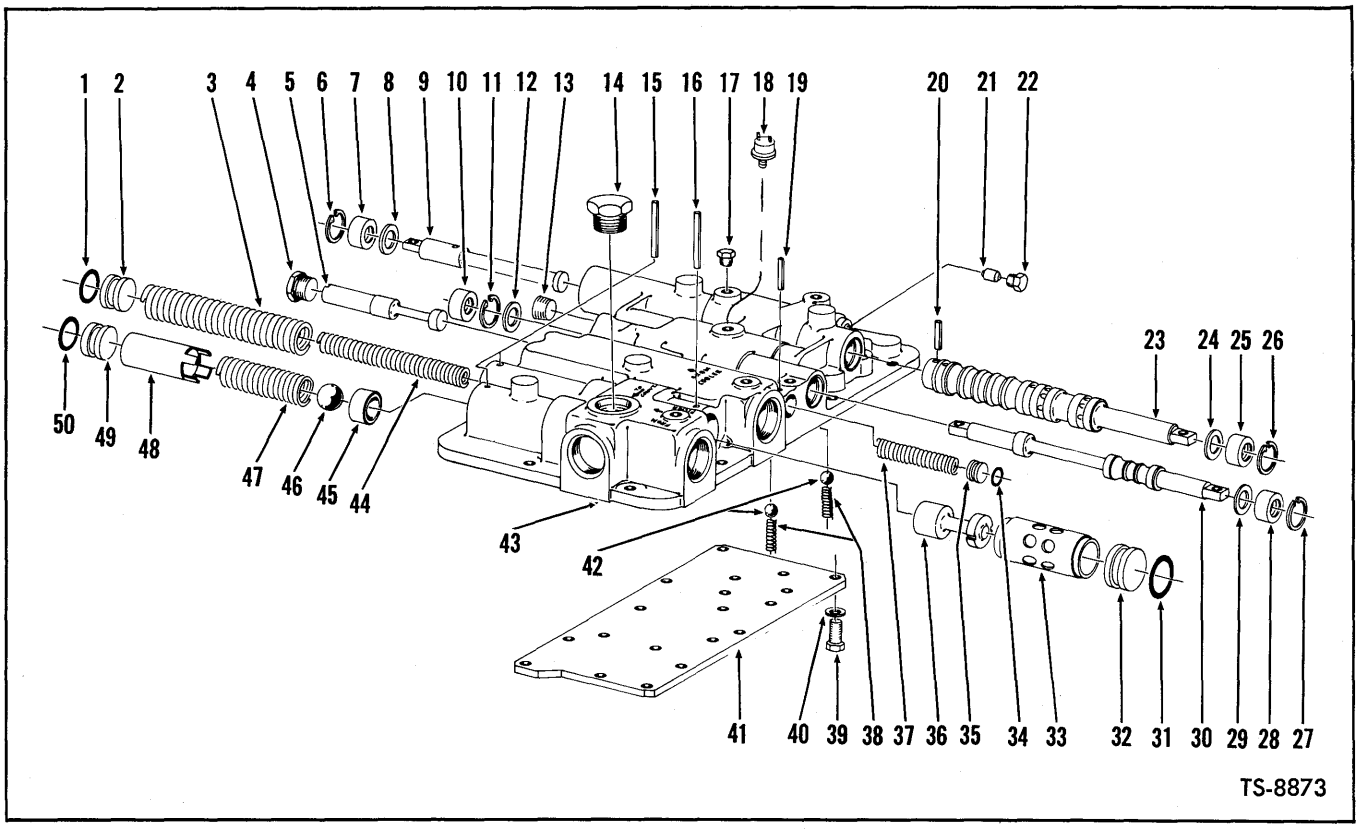

TRANSMISSION CONTROL COVER ASSEMBLY

Item No.	Part No.	Description	No. Req'd.
A	231110	COVER ASSY, Control (Inc. 1 thru 50)	1
1	893267	O-RING, Reg. Valve Stop	1
2	222041	STOP, Reg. Valve	1
3	217649	SPRING, Reg. Valve — Outer	1
4	24K-7	PLUG, Shut-Off Valve	1
5	217644	SPOOL, Shut-Off Valve	1
6	664140	RING, Selector Valve Ret.	1
7	233222	SEAL, Selector Valve Oil	1
8	217657	WASHER, Selector Valve	1
9	217635	VALVE, Inner Selector	1
10	233222	SEAL, Selector Valve Oil	1
11	664140	RING, Selector Valve Ret.	1
12	217657	WASHER, Selector Valve	1
13	16F-08	PLUG, Valve Hole	1
14	24K-10	PLUG, Pipe	1
15	300058	PIN, Reg. & Safety Valve Stop Roll	2
16	300058	PIN, Reg. & Safety Valve Stop Roll	1
17	40K-02	PLUG, Oil Passage	4
18	229729	SWITCH, Neutral Start	1
18A	10J-12	†BALL, Neutral Start Switch	1
19	654724	PIN, Valve Spool Stop Roll	1
20	667209	PIN, Selector Valve Roll	1
21	217654	VALVE, Shuttle	1
22	47K-3	PLUG, Shuttle Valve	1
23	217633	VALVE, Selector (Inc. 9, 20)	1
23A	226869	†Spacer, Selector Valve	1
24	217657	WASHER, Selector Valve	1
25	233222	SEAL, Selector Valve Oil	1
26	664140	RING, Selector Valve Ret.	1
27	664140	RING, Selector Valve Ret.	1
28	233222	SEAL, Selector Valve Oil	1
29	217657	WASHER, Selector Valve	1
30	217637	VALVE, Fwd. & Rev. Selector	1
31	791553	O-RING, Reg. Valve Stop	1
32	217647	STOP, Reg. Valve	1
33	———	§SLEEVE — See Item 36	—
34	25K-30018	O-RING, Valve Spool	1
35	220983	STOP, Valve Spool	1
36	801437	KIT, Reg. Valve Spool (Inc. 33)	1
37	217645	SPRING, Valve Spool	1
38	232600	SPRING, Poppet	2
39	1C-512	BOLT, Plate to Cover	17
40	5E-05	LKWSHR, Plate Mounting	17
41	217632	PLATE, Control Cover	1
42	10J-12	BALL, Poppet	2
43	229982	COVER, Control	1
44	217648	SPRING, Reg. Valve — Inner	1
45	217650	SEAT, Safety Valve	1
46	10J-24	BALL, Safety Valve	1
47	217651	SPRING, Safety Valve	1
48	217652	SPACER, Valve Seat Ret.	1
49	222041	STOP, Safety Valve	1
50	893267	O-RING, Valve Stop	1

†Not Illustrated
§Not Sold Separately

WHEN ORDERING PARTS, ALWAYS STATE MODEL AND SERIAL NO. OF MACHINE

https://truckmanualshub.com/

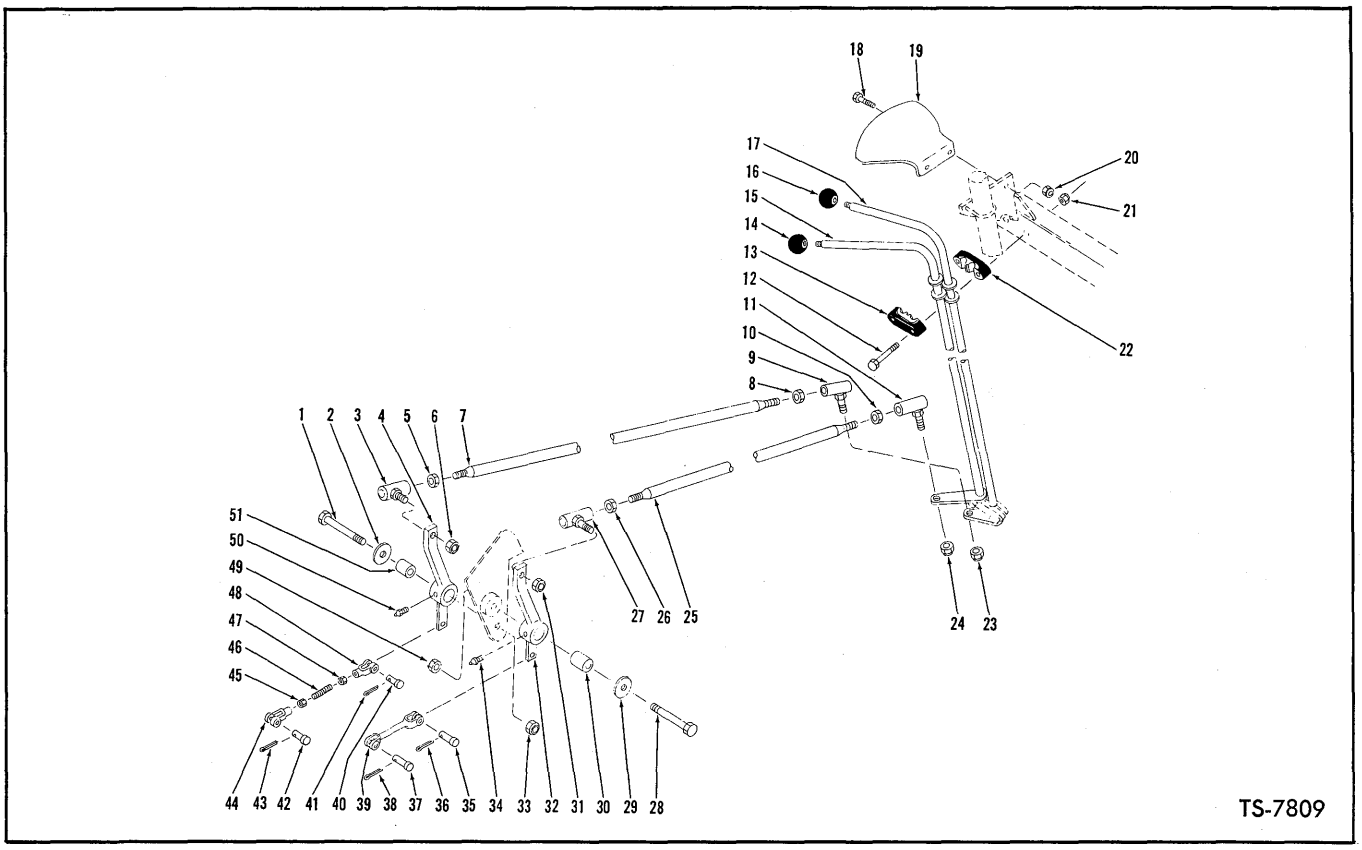

TRANSMISSION CONTROLS

Item No.	Part No.	Description	No. Req'd.
1	24C-1252	BOLT, Bellcrank to Bracket	1
2	585972	WASHER, Bellcrank to Bracket	1
3	1305485	BALL JOINT, Rod to Bellcrank	1
4	569777	BELLCRANK, Forward & Reverse	1
5	8D-08	NUT, Ball Joint Jam	1
6	18D-08	NUT, Ball Joint to Bellcrank	1
7	1545055	ROD, Forward & Reverse Control (Inc. 3, 5, 8, 9)	1
8	8D-08	NUT, Ball Joint Jam	1
9	1305485	BALL JOINT, Rod to Lever	1
10	8D-08	NUT, Ball Joint Jam	1
11	1305485	BALL JOINT, Rod to Lever	1
12	24C-536	BOLT, Lever Mounting Support	4
13	1508846	SUPPORT, Lever Mounting (Inc. 22)	2
14	509772	KNOB, Shift Lever	1
15	1543938	ROD ASSY, Four Speed Shift	1
16	509772	KNOB, Shift Lever	1
17	1543939	ROD ASSY, Forward & Reverse Shift	1
18	24C-616	BOLT, Shift Quadrant	1
19	568477	QUADRANT, Shift	1
20	18D-06	NUT, Shift Quadrant	1
21	18D-05	NUT, Lever Mounting Support	4
22	———	§SUPPORT, Lever Mounting — (See 13)	2
23	18D-08	NUT, Ball Joint to Shift Lever	1
24	18D-08	NUT, Ball Joint to Shift Lever	1
25	1545057	ROD, Four Speed Control (Inc. 10, 11, 26, 27)	1
26	8D-08	NUT, Ball Joint Jam	1
27	1305485	BALL JOINT, Rod to Bellcrank	1
28	24C-1280	BOLT, Bellcrank to Bracket	1
29	585972	WASHER, Bellcrank to Bracket	1
30	570676	SLEEVE, Bellcrank	1
31	18D-08	NUT, Ball Joint to Bellcrank	1
32	1525075	BELLCRANK, Four Speed	1
33	18D-12	NUT, Bellcrank to Bracket	1
34	10H-25	FITTING, Bellcrank Grease	1
35	4F-05062	PIN, Rod to Bellcrank	1
36	1F-312	COTTER, Clevis Pin	1
37	4F-05062	PIN, Rod to Transmission	1
38	1F-312	COTTER, Clevis Pin	1
39	569764	ROD, Bellcrank to Transmission	1
40	4F-05062	PIN, Clevis to Bellcrank	1
41	1F-312	COTTER, Clevis Pin	1
42	4F-05062	PIN, Clevis to Transmission	1
43	1F-312	COTTER, Clevis Pin	1
44	2J-5204	CLEVIS, Rod End	1
45	8D-05	NUT, Clevis Jam	1
46	1526206	ROD ASSY (Inc. 44, 45, 47, 48)	1
47	8D-05	NUT, Clevis Jam	1
48	2J-5204	CLEVIS, Rod End	1
49	18D-12	NUT, Bellcrank to Bracket	1
50	10H-25	FITTING, Bellcrank Grease	1
51	570676	SLEEVE, Bellcrank	1

§Not Sold Separately

WHEN ORDERING PARTS, ALWAYS STATE MODEL AND SERIAL NO. OF MACHINE

https://truckmanualshub.com/

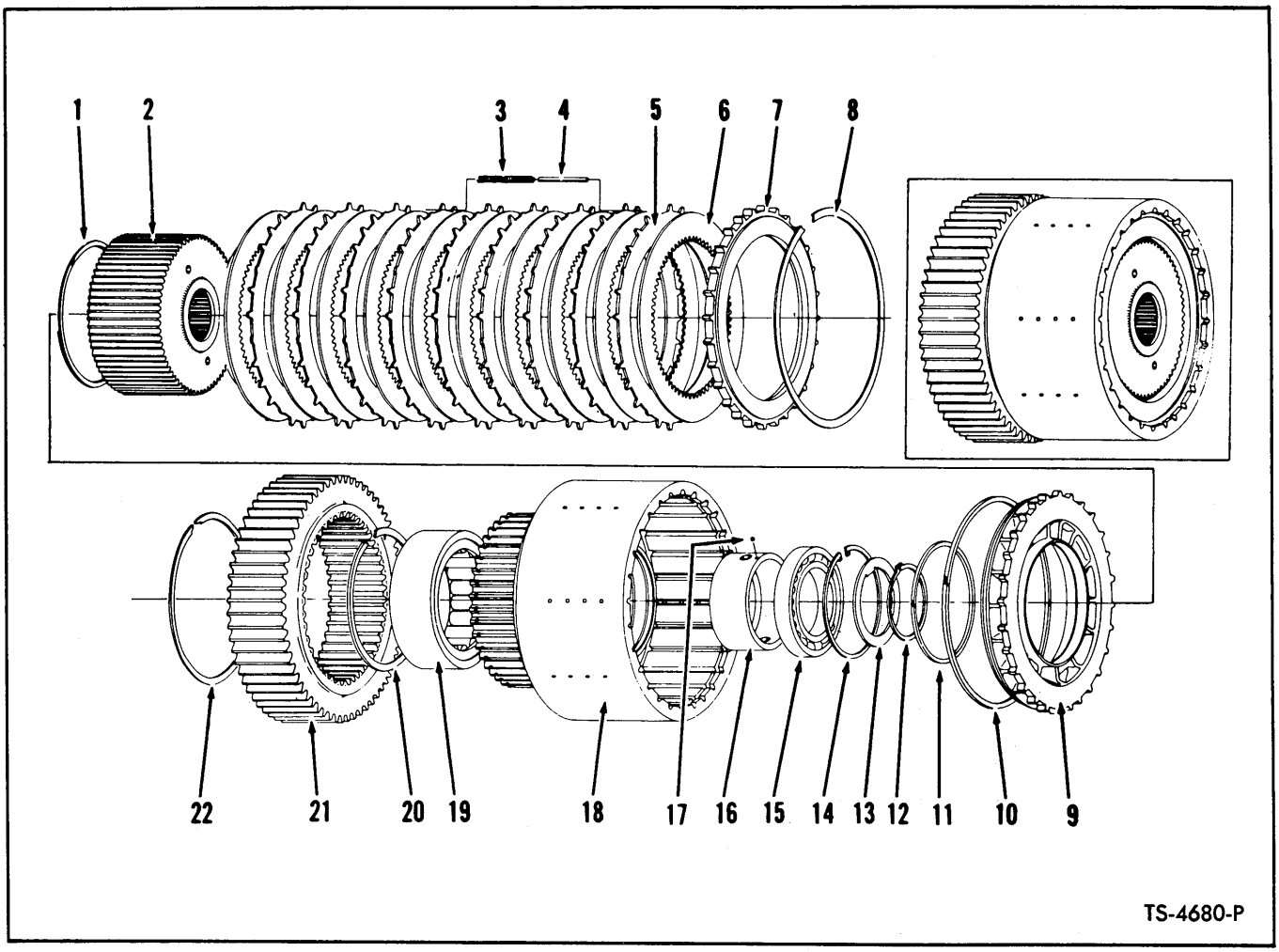

TRANSMISSION FIRST & SECOND CLUTCH GROUP

2 Clutches used in Transmission — Quantity indicated is for 1 Clutch

Item No.	Part No.	Description	No. Req'd.
1	217510	RING, Oil Baffle Retaining	1
2	217133	HUB ASSY, Clutch Disc	1
3	217334	SPRING, Clutch Disc Release	8
4	217599	PIN, Clutch Disc Release Spring	8
5	232285	DISC, Clutch — Outer	9
6	232779	DISC, Clutch — Inner	10
7	217137	PLATE, Clutch Disc End	1
8	217416	RING, End Plate Retaining	1
9	217138	PISTON, Clutch	1
10	217415	RING, Outer Piston	1
11	217420	RING, Inner Piston	1
12	791018	RING, Washer Retaining	1
13	217417	WASHER, Bearing	1
14	223982	RING, Bearing Retaining	1
15	225768	BEARING, Clutch Support	1
16	217136	RACE, Outer Piston Ring	1
17	10J-08	BALL, Outer Race	1
18	217130	DRUM ASSY, Clutch (Inc. 16, 17)	1
19	225766	BEARING, Clutch Support Roller	1
20	223852	RING, Bearing Retaining	1
21	227884	GEAR, Clutch Drum Hub (40T)	1
22	217692	RING, Gear Retaining	1

WHEN ORDERING PARTS, ALWAYS STATE MODEL AND SERIAL NO. OF MACHINE

https://truckmanualshub.com/

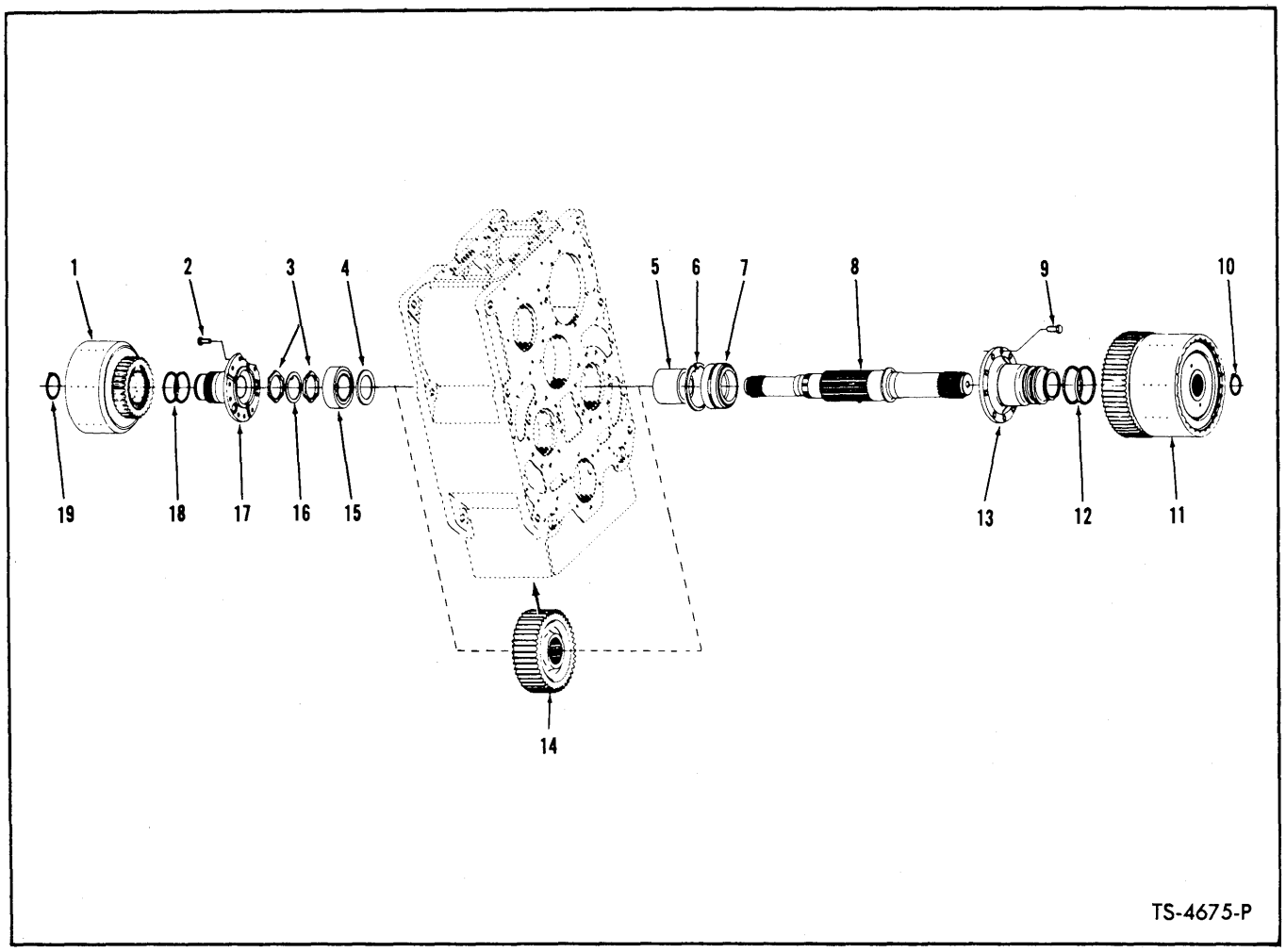

TRANSMISSION FIRST & THIRD SHAFT GROUP

Item No.	Part No.	Description	No. Req'd.
1	————	CLUTCH ASSY, 3rd Clutch—See Index	1
2	8C-820	BOLT, Clutch Support to Case	8
3	217506	NUT, Bearing Lock	2
4	222181	SPACER, Bearing	1
5	217502	SPACER, 1st & 3rd Shaft Gear	1
6	223982	RING, Bearing Retaining Snap	1
7	225400	BEARING, 1st & 3rd Shaft	1
8	217341	SHAFT, 1st & 3rd	1
9	8C-820	BOLT, Clutch Support to Case	8
10	660516	RING, Disc Hub Snap	1
11	————	CLUTCH ASSY, 1st Clutch—See Index	1
12	217418	RING, Clutch Support Piston	2
13	217128	SUPPORT, 1st Clutch	1
14	217359	GEAR, 1st & 3rd Shaft (45T)	1
15	225844	BEARING, 1st & 3rd Shaft	1
16	217507	LOCK, Bearing Nut	1
17	217156	SUPPORT, 3rd Clutch	1
18	223740	RING, Clutch Support Piston	2
19	659764	RING, Disc Hub Snap	1

WHEN ORDERING PARTS, ALWAYS STATE MODEL AND SERIAL NO. OF MACHINE

https://truckmanualshub.com/

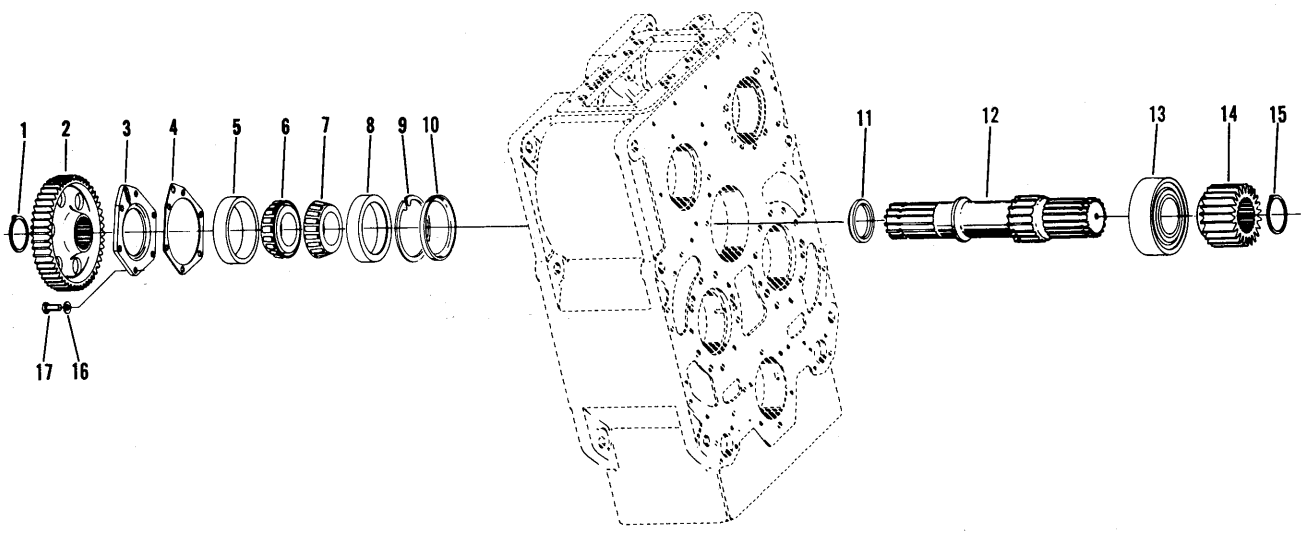

TS-7842

TRANSMISSION IDLER SHAFT GROUP

Item No.	Part No.	Description	No. Req'd.
1	711161	RING, Gear Retaining	1
2	217398	GEAR, Idler to Low Forward	1
3	217629	CAP, Bearing	1
4	217689	‡SHIM, Bearing Cap — .004	—
4A	217690	‡SHIM, Bearing Cap — .007	—
4B	217691	‡SHIM, Bearing Cap — .010	—
5	730503	CUP, Idler Shaft Bearing	1
6	710791	CONE, Idler Shaft Bearing	1
7	710791	CONE, Idler Shaft Bearing	1
8	730503	CUP, Idler Shaft Bearing	1
9	223879	RING, Bearing Retaining	1
10	217598	BAFFLE, Bearing Oil	1
11	217628	SPACER, Bearing	1
12	217352	SHAFT, Idler	1
13	231596	BEARING, Idler Shaft	1
13A	10J-14	†BALL, Bearing Lock	1
14	227883	GEAR, Idler to First	1
15	507688	RING, Gear Retaining	1
16	4E-08	LKWSHR, Bearing Cap	5
17	1C-820	BOLT, Bearing Cap	5

†Not Illustrated
‡As Required

WHEN ORDERING PARTS, ALWAYS STATE MODEL AND SERIAL NO. OF MACHINE

https://truckmanualshub.com/

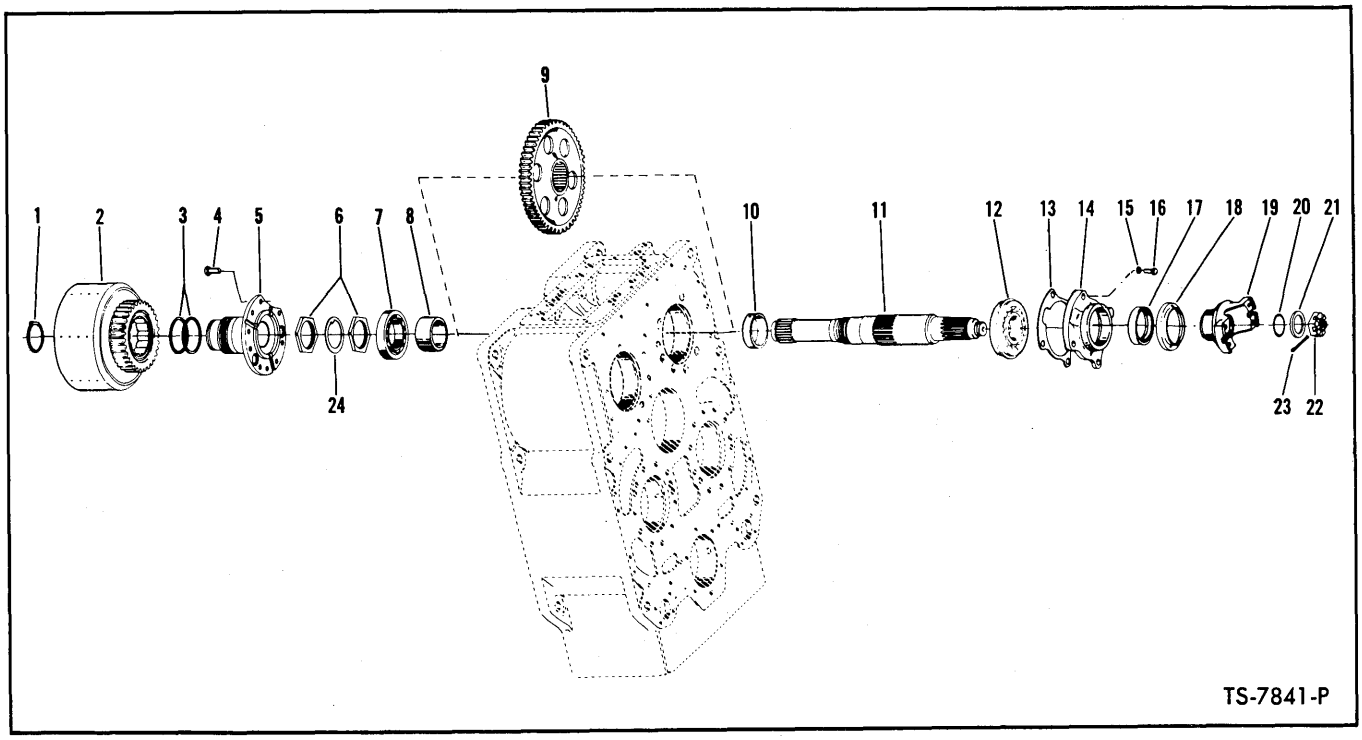

TRANSMISSION INPUT SHAFT GROUP

Item No.	Part No.	Description	No. Req'd.
1	659764	RING, Disc Hub Snap	1
2	———	CLUTCH ASSY, Input — See Index	—
3	223740	RING, Clutch Support Piston	2
4	8C-820	BOLT, Clutch Support to Case	8
5	217156	SUPPORT, Input Clutch	1
6	217506	NUT, Bearing Lock	2
7	225840	BEARING, Rear	1
8	217508	SPACER, Input Shaft Gear	1
9	217399	GEAR, Input Shaft (50T)	1
10	217500	SPACER, Input Shaft Gear	1
11	217545	SHAFT, Input	1
12	225842	BEARING, Front	1
13	217490	GASKET, Bearing Cap	1
14	217489	CAP, Bearing	1
15	4E-08	LKWSHR, Bearing Cap to Case	4
16	1C-820	BOLT, Bearing Cap to Case	4
17	209587	SEAL, Oil	1
18	100949	DEFLECTOR, Input Flange	1
19	222232	FLANGE ASSY, Input (7-C) (Inc. 18)	1
20	25K-60116	"O" RING, Flange	1
21	222179	WASHER, Flange	1
22	205928	NUT, Flange to Shaft	1
23	1F-636	COTTER, Flange Nut	1
24	217507	LOCK, Nut	1

WHEN ORDERING PARTS, ALWAYS STATE MODEL AND SERIAL NO. OF MACHINE

https://truckmanualshub.com/

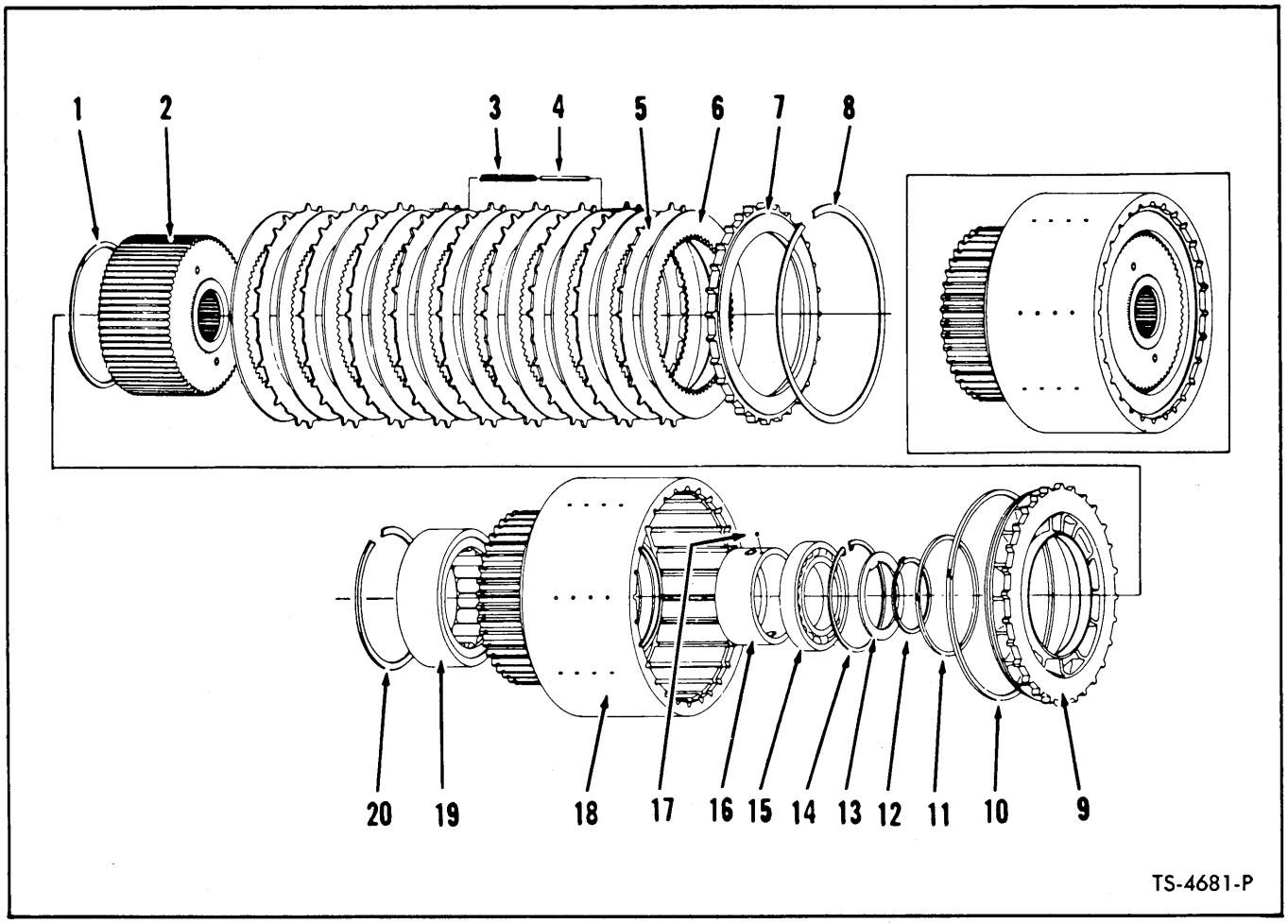

TRANSMISSION INPUT — REVERSE, THIRD & FOURTH CLUTCH GROUP

4 Clutches used in Transmission — Quantity indicated is for 1 Clutch

Item No.	Part No.	Description	No. Req'd.
1	217509	RING, Oil Baffle Retaining	1
2	217158	HUB ASSY, Clutch Disc	1
3	217334	SPRING, Clutch Disc Release	6
4	217599	PIN, Clutch Disc Release Spring	6
5	232394	DISC, Clutch Outer	9
6	227495	DISC, Clutch Inner	10
7	217161	PLATE, Clutch Disc End	1
8	217099	RING, End Plate Retaining	1
9	217164	PISTON, Clutch	1
10	217361	RING, Outer Piston	1
11	217411	RING, Inner Piston	1
12	731627	RING, Washer Retaining	1
13	217165	WASHER, Bearing	1
14	664116	RING, Bearing Retaining	1
15	225813	BEARING, Clutch Support	1
16	217155	RACE, Outer Piston Ring	1
17	10J-08	BALL, Outer Race	1
18	217152	DRUM ASSY, Clutch (Inc. 16, 17)	1
19	225796	BEARING, Clutch Support Roller	1
20	223997	RING, Bearing Retaining	1

WHEN ORDERING PARTS, ALWAYS STATE MODEL AND SERIAL NO. OF MACHINE

https://truckmanualshub.com/

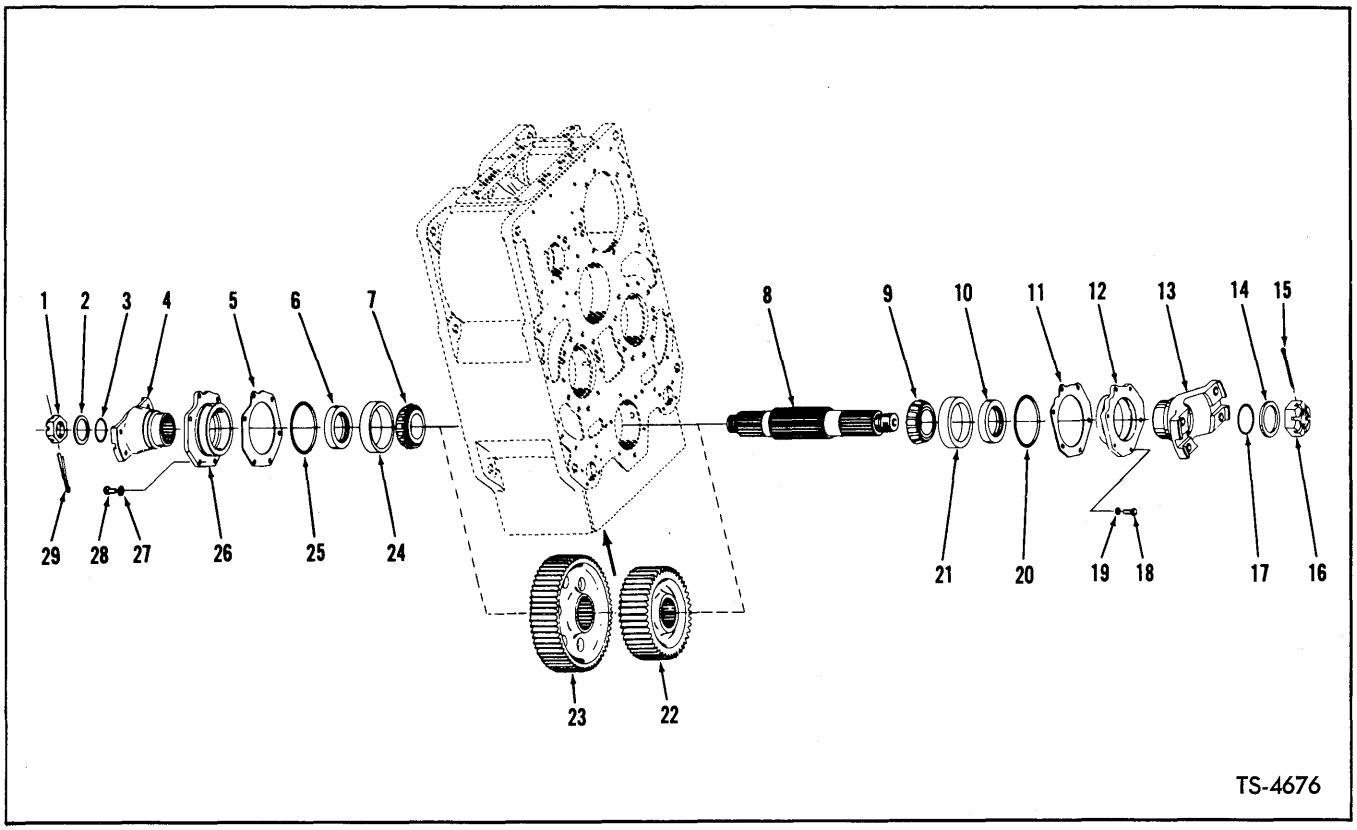

TRANSMISSION OUTPUT SHAFT GROUP

Item No.	Part No.	Description	No. Req'd.
1	201262	NUT, Output Shaft Flange	1
2	222181	WASHER, Output Shaft Flange	1
3	25K-60204	O-RING, Output Shaft Flange	1
4	226938	FLANGE, Output	1
5	217686	‡SHIM, Bearing Cap — .004"	—
5A	217687	‡†SHIM, Bearing Cap — .007"	—
5B	217688	‡†SHIM, Bearing Cap — .010"	—
6	225763	SEAL, Output Shaft Oil	1
7	225850	CONE, Output Shaft Tapered Bearing	1
8	218703	SHAFT, Output	1
9	225850	CONE, Output Shaft Tapered Bearing	1
10	225763	SEAL, Output Shaft Oil	1
11	217686	‡SHIM, Bearing Cap — .004"	—
11A	217687	‡†SHIM, Bearing Cap — .007"	—
11B	217688	‡†SHIM, Bearing Cap — .010"	—
12	217626	CAP ASSY, Output Shaft Bearing (Inc. 10)	1
13	217457	FLANGE, Output	1
14	222181	WASHER, Output Shaft Flange	1
15	1F-632	COTTER, Output Shaft Flange Nut	1
16	201262	NUT, Output Shaft Flange	1
17	25K-60204	O-RING, Output Shaft Flange	1
18	1C-820	BOLT, Output Shaft Cap Assy	6
19	4E-08	LKWSHR, Output Shaft Cap Assy	6
20	25K-40408	O-RING, Bearing Cap	1
21	742243	CUP, Output Shaft Tapered Bearing	1
22	217343	GEAR, Output Shaft to 2nd-4th (43T)	1
23	217358	GEAR, Output Shaft to 1st-3rd (58T)	1
24	742243	CUP, Output Shaft Tapered Bearing	1
25	25K-40408	O-RING, Bearing Cap	1
26	217626	CAP ASSY, Output Shaft Bearing (Inc. 6)	1
27	4E-08	LKWSHR, Output Shaft Cap Assy	6
28	1C-820	BOLT, Output Shaft Cap Assy	6
29	1F-632	COTTER, Output Shaft Flange Nut	1

†Not Illustrated
‡As Required

WHEN ORDERING PARTS, ALWAYS STATE MODEL AND SERIAL NO. OF MACHINE

https://truckmanualshub.com/

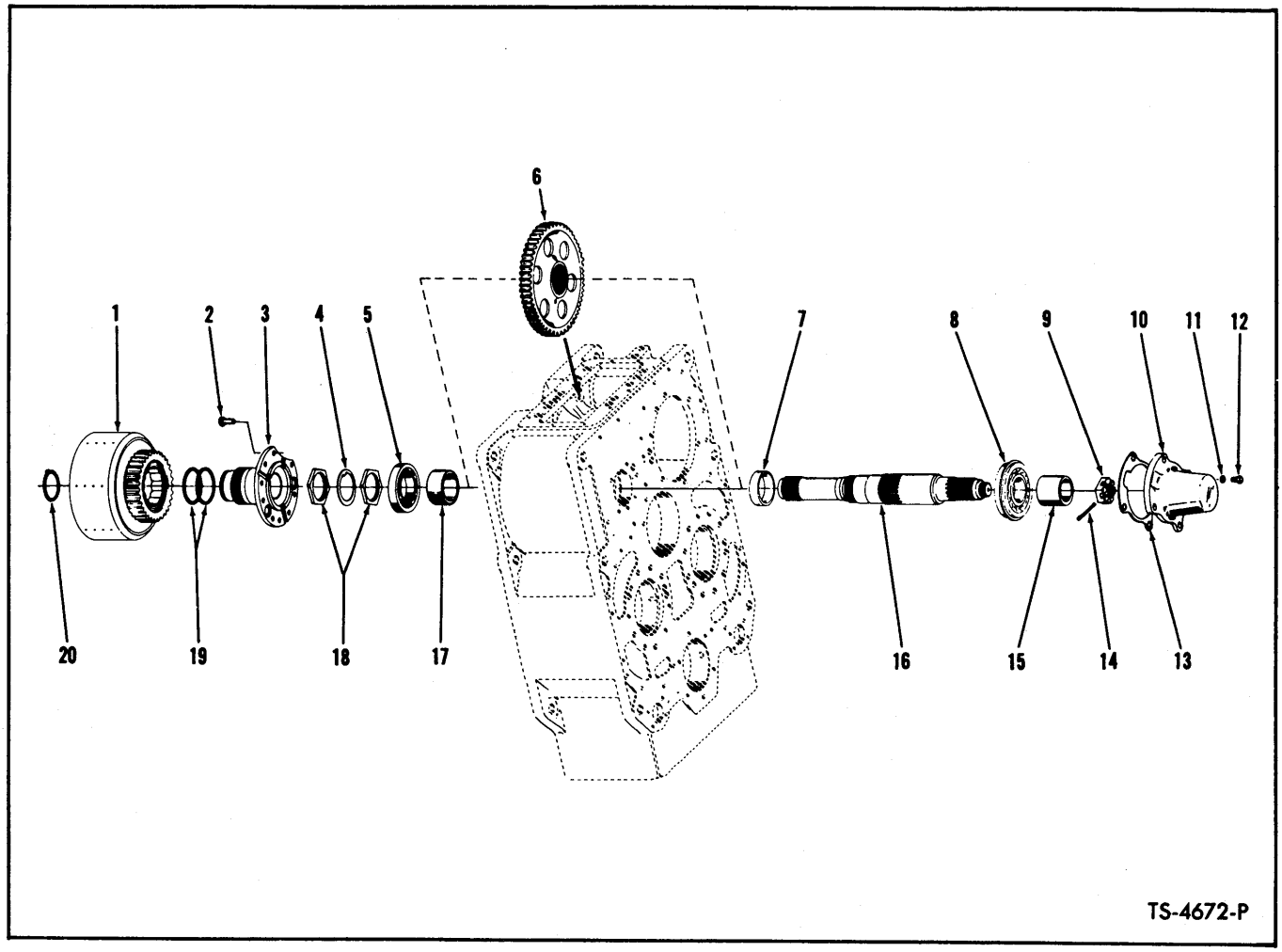

TRANSMISSION REVERSE SHAFT GROUP

Item No.	Part No.	Description	No. Req'd.
1	———	CLUTCH ASSY, Reverse — See Index..	1
2	8C-820	BOLT, Clutch Support to Case	8
3	217156	SUPPORT, Reverse	1
4	217507	LOCK, Bearing Nut	1
5	225840	BEARING, Rear Drive Shaft	1
6	217399	GEAR, Reverse Shaft (50T)	1
7	217500	SPACER, Reverse Shaft Gear	1
8	225842	BEARING, Front Drive Shaft	1
9	205928	NUT, Reverse Drive Shaft	1
10	217488	CAP, Bearing	1
11	4E-08	LKWSHR, Bearing Cap	4
12	1C-820	BOLT, Bearing Cap	4
13	217490	GASKET, Bearing Cap	1
14	1F-636	COTTER, Reverse Drive Shaft	1
15	217504	SPACER, Bearing	1
16	217545	SHAFT, Reverse	1
17	217508	SPACER, Reverse Shaft Gear	1
18	217506	NUT, Bearing Lock	2
19	223740	RING, Clutch Support Piston	2
20	659764	RING, Disc Hub Snap	1

WHEN ORDERING PARTS, ALWAYS STATE MODEL AND SERIAL NO. OF MACHINE

https://truckmanualshub.com/

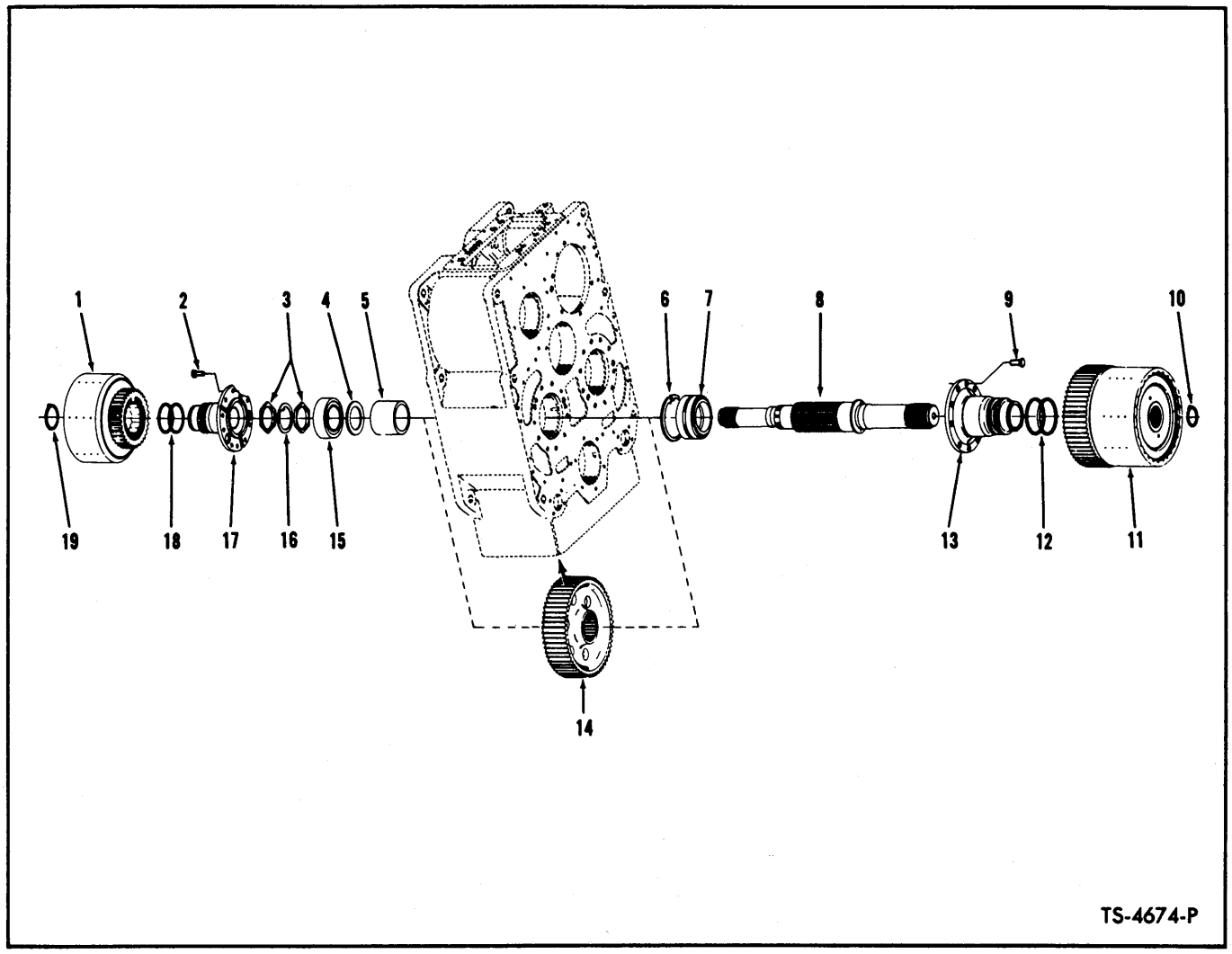

TRANSMISSION SECOND & FOURTH SHAFT GROUP

Item No.	Part No.	Description	No. Req'd.
1	———	CLUTCH ASSY, 4th Clutch—See Index	1
2	8C-820	BOLT, Clutch Support to Case	8
3	217506	NUT, Bearing Lock	2
4	222181	SPACER, Bearing	1
5	217502	SPACER, 2nd & 4th Shaft Gear	1
6	223982	RING, Bearing Retaining Snap	1
7	225400	BEARING, 2nd & 4th Shaft	1
8	217341	SHAFT, 2nd & 4th	1
9	8C-820	BOLT, Clutch Support to Case	8
10	660516	RING, Disc Hub Snap	1
11	———	CLUTCH, 2nd Clutch — See Index	1
12	217418	RING, Clutch Support Piston	2
13	217128	SUPPORT, 2nd Clutch	1
14	217342	GEAR, 2nd & 4th Shaft (60T)	1
15	225844	BEARING, 2nd & 4th Shaft	1
16	217507	LOCK, Bearing Nut	1
17	217156	SUPPORT, 4th Clutch	1
18	223740	RING, Clutch Support Piston	2
19	659764	RING, Disc Hub Snap	1

WHEN ORDERING PARTS, ALWAYS STATE MODEL AND SERIAL NO. OF MACHINE

https://truckmanualshub.com/

https://truckmanualshub.com/

"V" GROUP

CONTENTS

Valve Group:

Valve Assembly, Air Brake V2

Valve Assembly, Bucket Leveler — Air V3

Valve Assembly — Main V4

Section B — Boom V5

Section C — Bucket V6

Section D — Control V7

Valve Relief V8

Valve Assembly, Pilot V11

Valve Assembly, Transmission Declutch V14

Valve Controls and Piping V17

https://truckmanualshub.com/

VALVE ASSEMBLY — AIR BRAKE

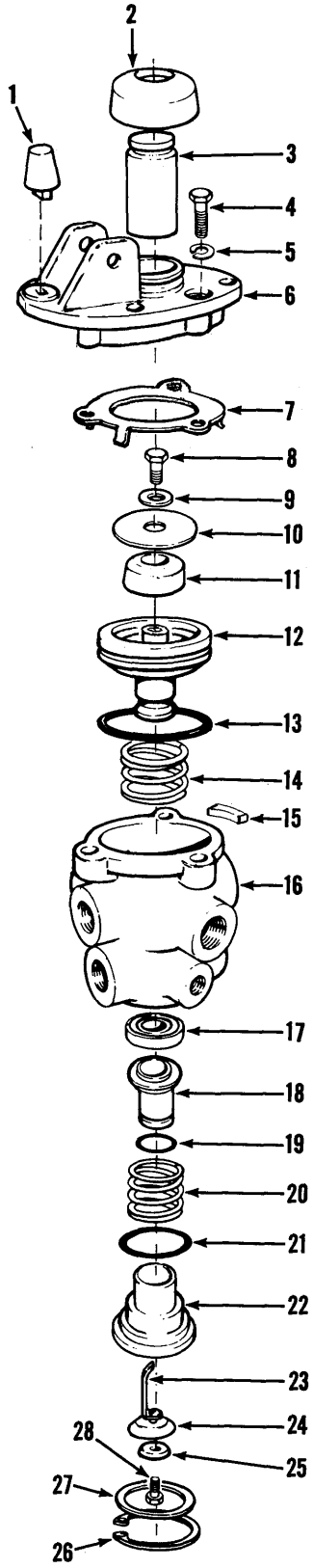

Item No.	Part No.	Description	No. Req'd.
A	945996	AIR BRAKE VALVE KIT (Inc. 1 thru 28)	1
B	3290125	REPAIR KIT, Major (Inc. 1, 2, 11, 13, 14, 15, 18, 19, 20, 21, 23, 24)	1
C	3290124	REPAIR KIT, Minor (Inc. 1, 2, 18, 19, 21, 24)	1
D	3290099	REPAIR KIT, Piston Assy (Inc. 8 thru 12)	1
E	3290106	REPAIR KIT, Inlet-Exhaust Valve (Inc. 17 thru 26)	1
1	513932	RUBBER STOP	1
2	875762	RUBBER BOOT	1
3	3290122	PLUNGER, Valve	1
4	1C-520	BOLT, Mounting Plate to Body	3
5	4E-05	LKWSHR, Mounting Plate to Body	3
6	949260	MOUNTING PLATE, Valve	1
7	894543	RETAINER, Piston Assy	1
8	21C-410	BOLT, Piston	1
9	894542	WASHER, Piston Bolt	1
10	894541	SEAT, Rubber Spring	1
11	894540	SPRING, Rubber	1
12	894539	PISTON, Valve	1
13	25K-40204	O-RING, Piston	1
14	875754	SPRING, Piston Return	1
15	949261	FILTER, Felt Vent	1
16	3290105	BODY, Valve	1
17	894537	RETAINER, Valve	1
18	894538	VALVE, Inlet/Exhaust	1
19	25K-20020	O-RING, Exhaust Valve	1
20	894536	SPRING, Exhaust Valve	1
21	25K-30112	O-RING, Valve Seat	1
22	894535	SEAT, Exhaust Valve	1
23	894534	SPRING, Valve Pre-Load	1
24	894533	DIAPHRAGM, Valve Seat	1
25	894532	WASHER, Diaphragm	1
26	87G-806	SCREW, Valve Seat	1
27	661415	RING, Retainer — Exhaust Valve	1
28	949264	WASHER, Retainer Ring	1

WHEN ORDERING PARTS, ALWAYS STATE MODEL AND SERIAL NO. OF MACHINE

https://truckmanualshub.com/

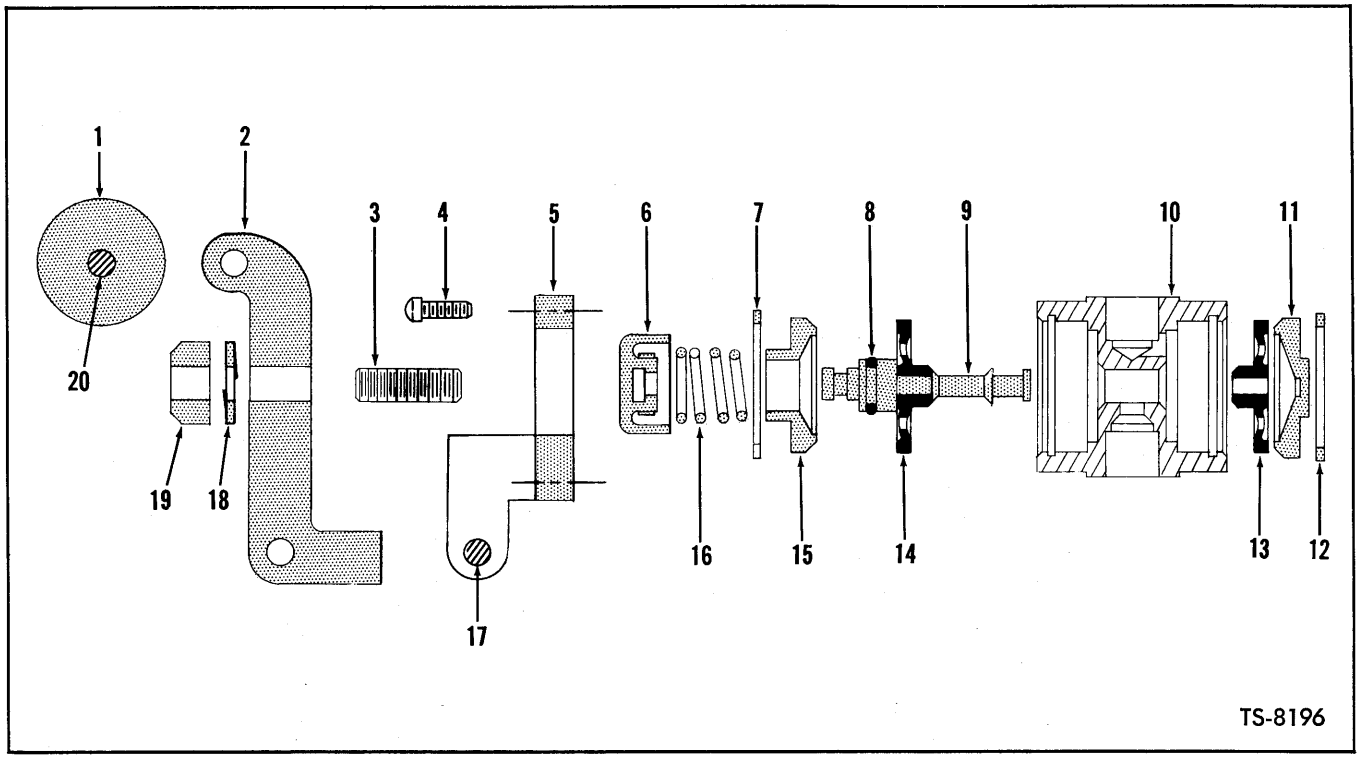

VALVE ASSEMBLY — BUCKET LEVELER — AIR

For Serial: 425A101 thru 316, 318 thru 325, 327 thru 330, 332 thru 336

No. Item	No. Part	Description	No. Req'd.
A	1504697	AIR VALVE ASSY (Inc. 1 thru 20)	1
B	895683	SEAL REPAIR KIT (Inc. 6, 8, 9, 13, 14, 16)	1
1	947178	ROLLER, Air Valve Lever	1
2	947175	LEVER, Air Valve	1
3	15G-416	SCREW, Adjusting	1
4	42G-1008	SCREW, Cover Bracket Attaching	4
5	947176	BRACKET, Top Cover	1
6	947177	BUTTON ASSY (Inc. 16)	1
7	1303319	RING, Retaining	1
8	25K-20012	O-RING, Stem	1
9	947165	BUTTON & STEM ASSY (Inc. 6 & 16)	1
10	———	§BODY — See "A"	—
11	947226	CLOSED END CAP	1
12	1303319	RING, Retaining	1
13	889239	DIAPHRAGM	1
14	889239	DIAPHRAGM	1
15	947225	OPEN END CAP	1
16	889242	SPRING	1
17	947179	PIVOT PIN	1
18	4E-04	LKWSHR, Adjusting Screw	1
19	1D-04	NUT, Adjusting Screw Lock	1
20	947179	PIVOT PIN	1

§Not Sold Separately

WHEN ORDERING PARTS, ALWAYS STATE MODEL AND SERIAL NO. OF MACHINE

https://truckmanualshub.com/

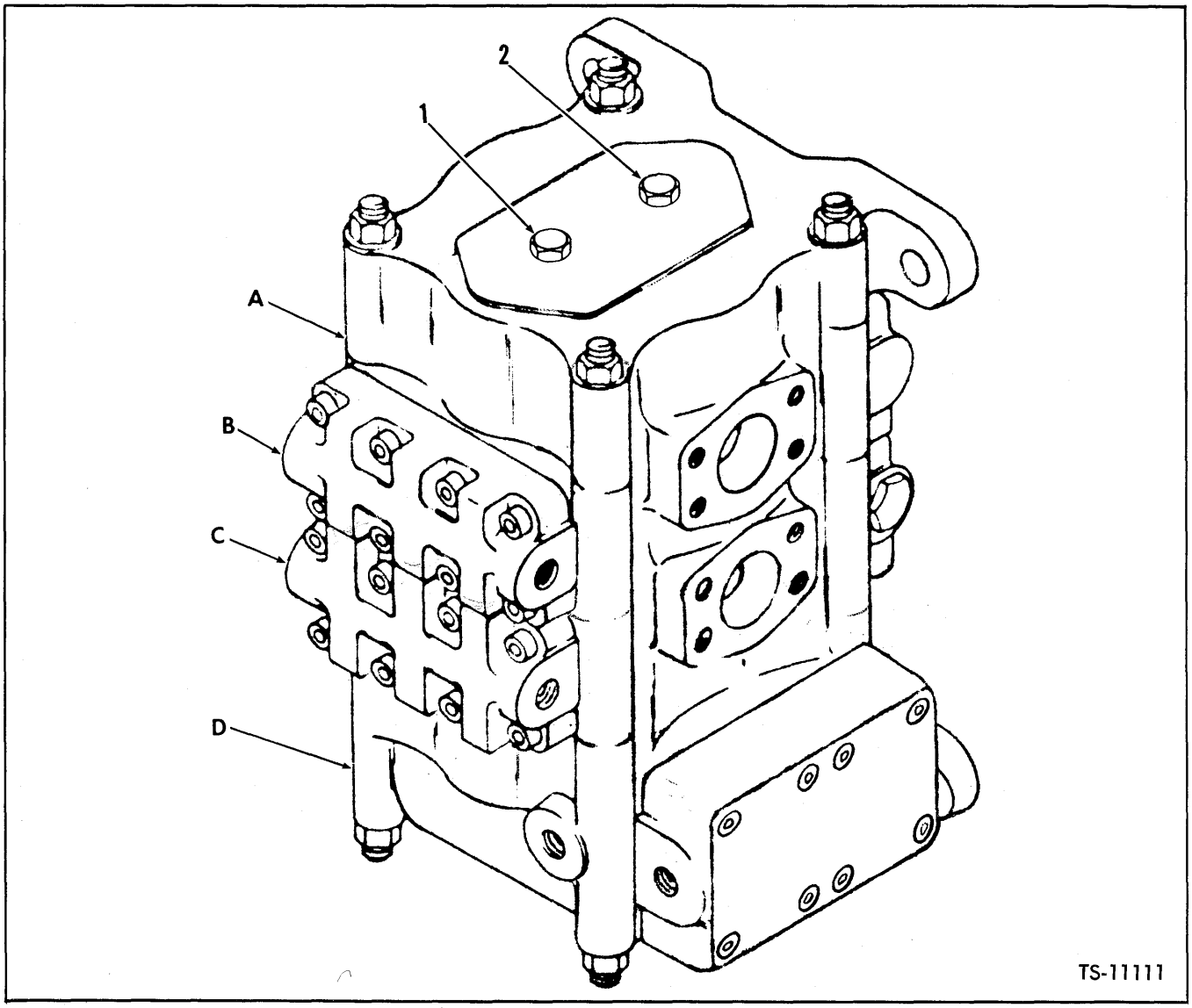

VALVE ASSEMBLY — MAIN

No. Item	No. Part	Description	No. Req'd.
A	1513190	*CONTROL VALVE ASSY	1
1	948847	PLUG, Pipe	1
1A	91F-3	†O-RING, Plug	1
2	948847	PLUG, Pipe	1
2A	91F-3	†O-RING, Plug	1
A	———	§COVER SECTION — See "A"	
B	———	§BOOM SECTION "B" — See Page V5	
C	———	§BUCKET SECTION "C" — See Page V6	
D	———	§CONTROL SECTION "D" — See Page V7	
E	———	†RELIEF VALVE ASSY — See Page V8	

†Not Illustrated

§Not Sold Separately

*While this valve assembly consists of separate sections, for use in manufacturing, held together with through bolts with nuts on each end, DO NOT remove the through bolts or separate the sections of the valve. Also the torque on the through bolts is not to be disturbed. Disregard of these instructions can and will cause difficulties necessitating replacement of complete valve assembly. Control Valve Assy. under above designation includes all items on pages V5 thru V8.

For purpose of identification, illustration above indicates by alphabetical designation the individual section group location in control valve. Code to alphabetical designation also appears in heading of each section covered in parts listing herein.

WHEN ORDERING PARTS, ALWAYS STATE MODEL AND SERIAL NO. OF MACHINE

https://truckmanualshub.com/

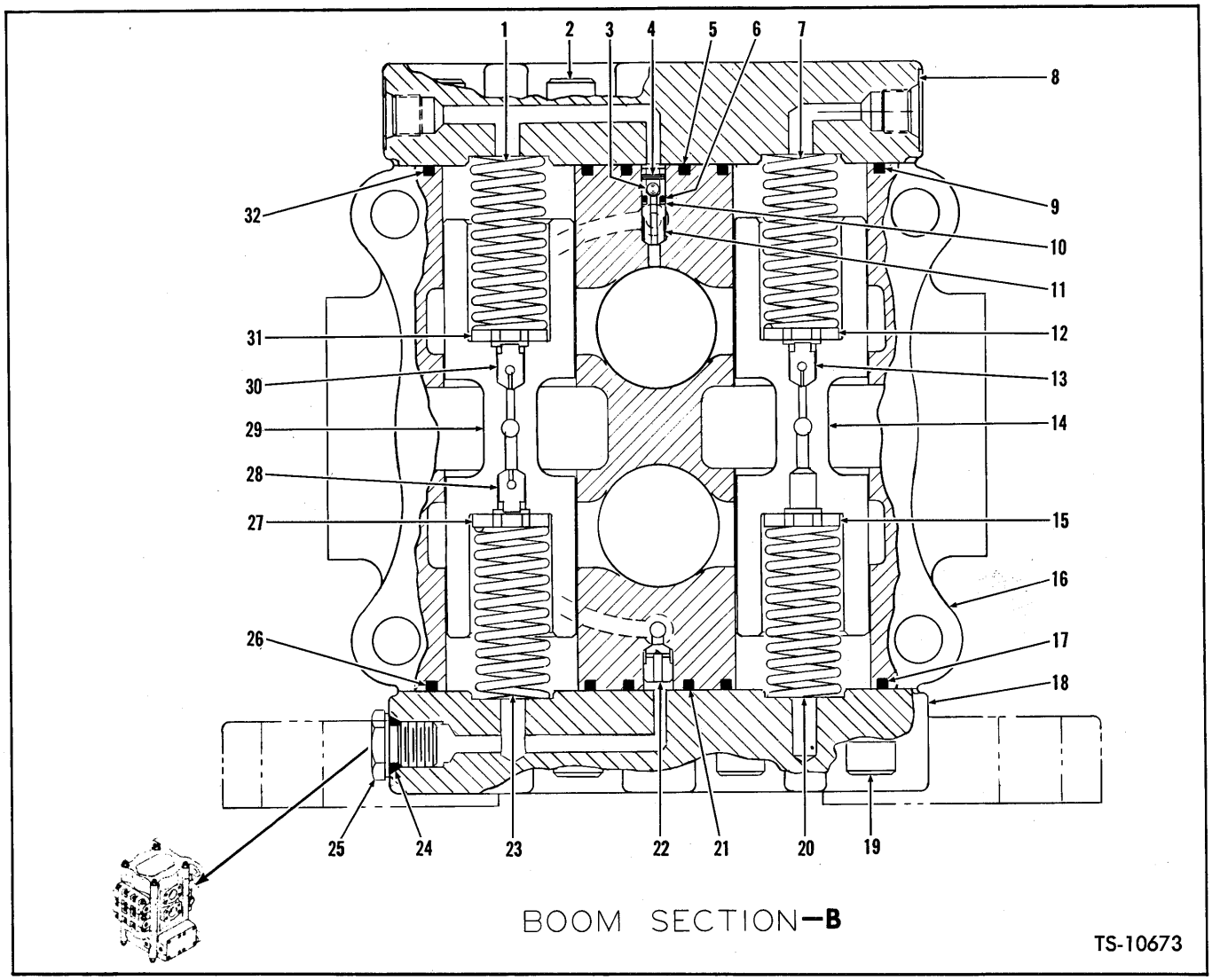

VALVE ASSEMBLY — MAIN — SECTION B, BOOM

Item No.	Part No.	Description	No. Req'd.
1	948818	SPRING, Poppet — Blue	1
2	11G-828	BOLT, Cove to Housing	8
3	———	§BALL — See Item 11	—
4	———	§PIN — See Item 11	—
5	25K-30022	O-RING, Cover to Housing	1
6	948057	O-RING, Poppet	1
7	948818	SPRING, Poppet — Blue	1
8	948817	COVER, Plunger	1
9	25K-40200	O-RING, Cover	1
10	948794	RING, Back-Up	1
11	949259	POPPET ASSY (Inc. 3, 4, 6)	1
12	948846	WASHER	1
13	948789	CHECK, Red (.110 Orifice Size #35 Drill)	1
14	———	§PLUNGER — See "A"	—
15	948846	WASHER	1
16	———	§HOUSING, Plunger — See "A"	—
17	25K-40200	O-RING, Cover	1
18	948816	COVER	1
19	11G-828	BOLT, Cover to Housing	8
20	948818	SPRING, Plunger Return — Blue	1
21	25K-30022	O-RING, Cover	1
22	948051	CHECK	1
23	948818	SPRING, Check — Blue	1
24	91F-6	O-RING, Plug	1
25	948058	PLUG, Cover	1
26	25K-40200	O-RING, Cover	1
27	948846	WASHER	1
28	948789	CHECK, Red (.110 Orifice Size #35 Drill)	1
29	———	§PLUNGER — See "A"	—
30	948060	CHECK, White (.063 Orifice Size #42 Drill)	1
31	948846	WASHER	1
32	25K-40200	O-RING	1

§Not Sold Separately

WHEN ORDERING PARTS, ALWAYS STATE MODEL AND SERIAL NO. OF MACHINE

https://truckmanualshub.com/

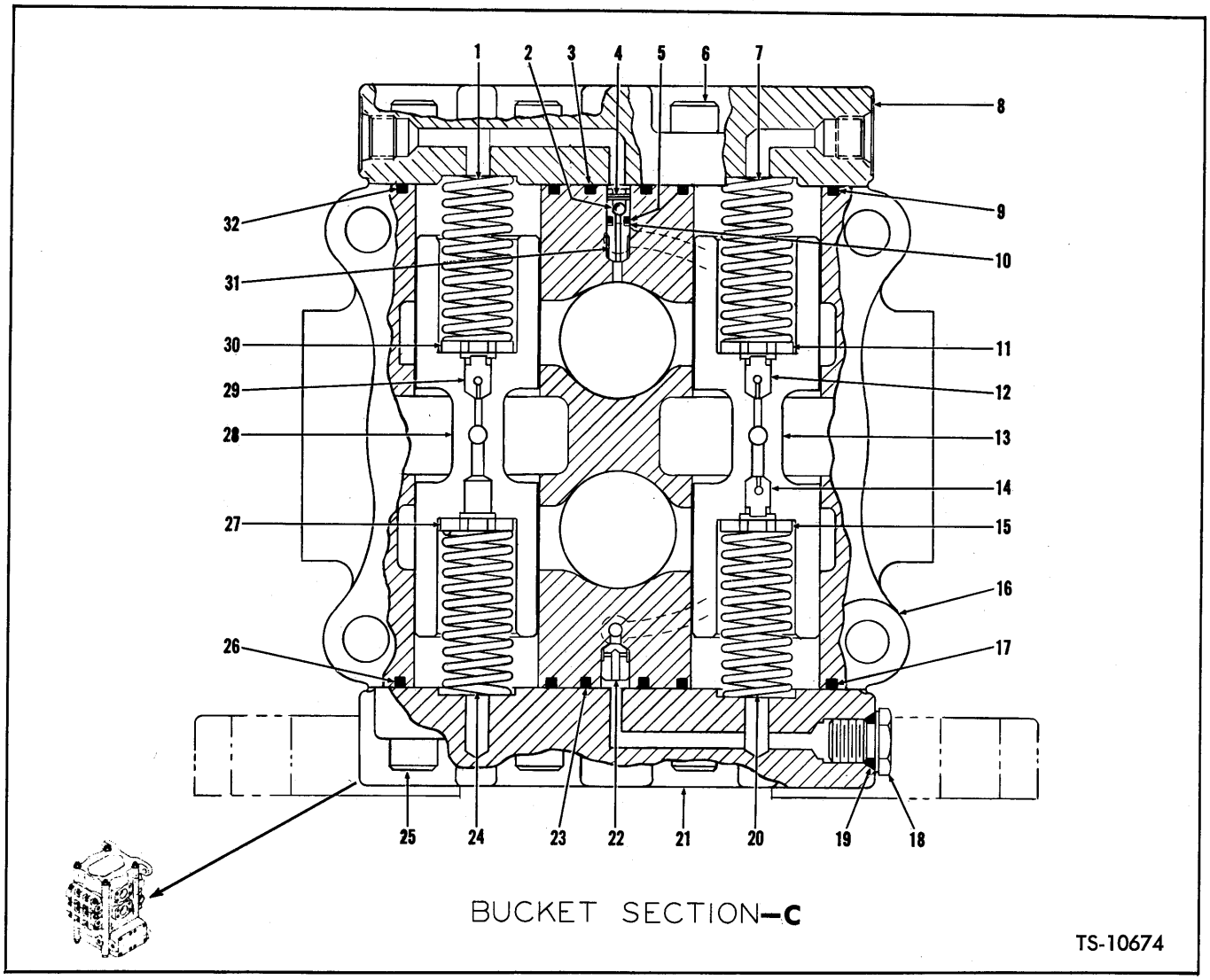

VALVE ASSEMBLY — MAIN — SECTION C, BUCKET

Item No.	Part No.	Description	No. Req'd.
1	948818	SPRING, Poppet — Blue	1
2	———	§BALL, Poppet — See 31	—
3	25K-30022	O-RING, Cover to Housing	1
4	———	§PIN, Poppet — See 31	—
5	948057	O-RING, Poppet	1
6	11G-828	BOLT, Cover to Housing	8
7	948818	SPRING, Check	1
8	948817	COVER, Housing	1
9	25K-40200	O-RING, Cover to Housing	1
10	948794	RING, Back-Up	1
11	948846	WASHER	1
12	948060	CHECK, White (.063 Orifice Size #52 Drill)	1
13	———	§PLUNGER — See "A"	—
14	948054	CHECK, Green (.093 Orifice Size #42 Drill)	1
15	948846	WASHER	1
16	———	§HOUSING — See "A"	—
17	25K-40200	O-RING, Cover to Housing	1
18	948058	PLUG, Cover	1
19	91F-6	O-RING, Plug	1
20	948818	SPRING, Check — Blue	1
21	948816	COVER	1
22	948051	CHECK	1
23	25K-30022	O-RING, Cover to Housing	1
24	948818	SPRING, Plunger Return — Blue	1
25	11G-828	BOLT, Cover to Housing	8
26	25K-40200	O-RING, Cover to Housing	1
27	948846	WASHER	1
28	———	§PLUNGER — See "A"	—
29	948060	CHECK, White (.063 Orifice Size #52 Drill)	1
30	948846	WASHER	1
31	949259	POPPET ASSY	1
32	25K-40200	O-RING, Cover	1

§Not Sold Separately

WHEN ORDERING PARTS, ALWAYS STATE MODEL AND SERIAL NO. OF MACHINE

https://truckmanualshub.com/

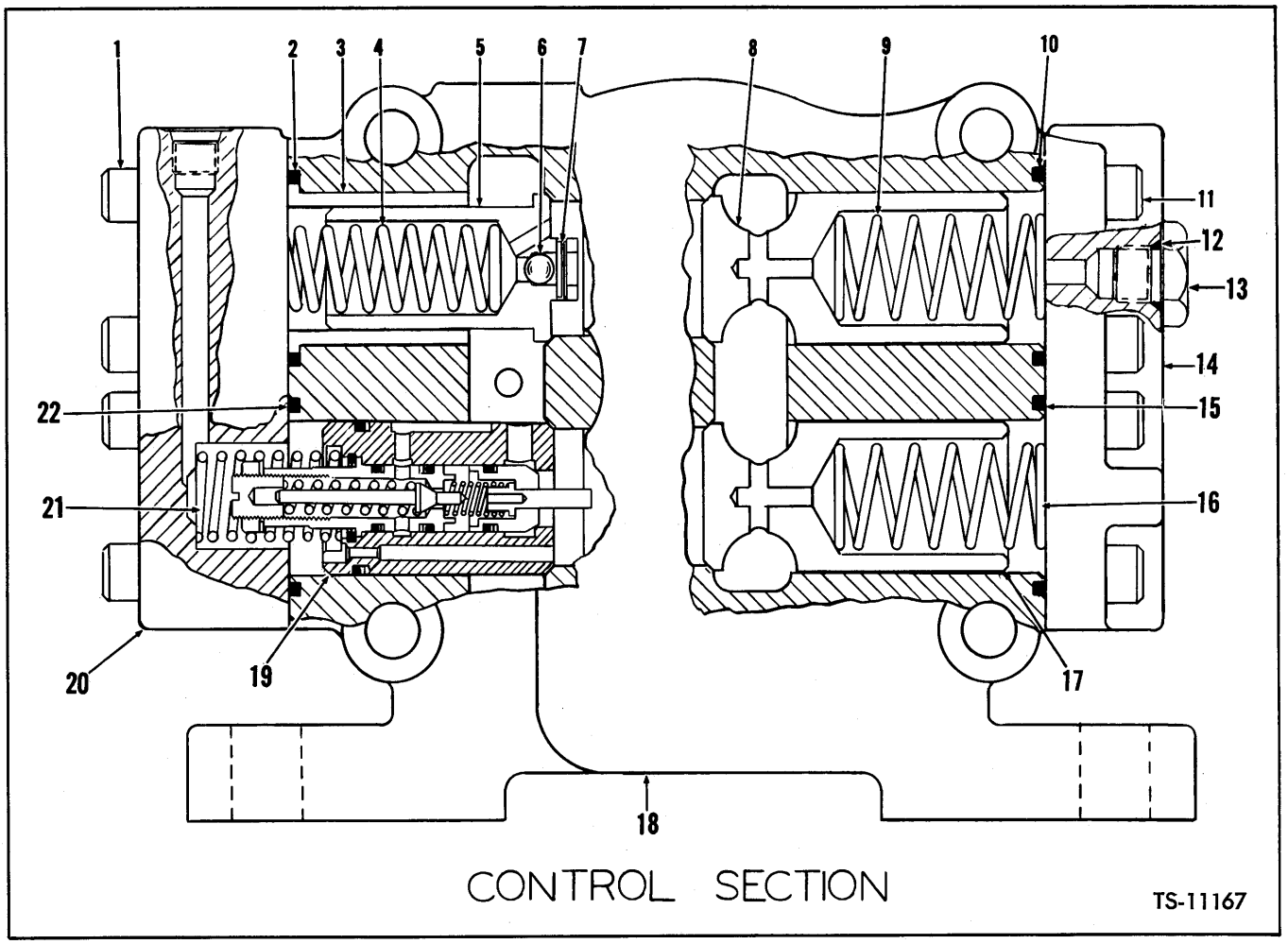

VALVE ASSEMBLY — MAIN — SECTION D, CONTROL

No. Item	No. Part	Description	No. Req'd.
1	11G-828	BOLT, Cover to Housing	8
2	25K-40200	O-RING, Cover	1
3	———	§SLEEVE, Poppet — See 5	—
4	948814	SPRING, Poppet	1
5	948859	POPPET ASSY (Inc. 3, 6, 7)	1
6	———	§BALL, Poppet — See 5	—
7	———	§PIN, Poppet — See 5	—
8	948821	POPPET	1
9	948823	SPRING, Poppet	1
10	25K-40200	O-RING	1
11	11G-828	BOLT, Cover to Housing	8
12	91F-8	O-RING, Plug	1
13	949309	PLUG, Cover	1
14	949298	COVER, Poppet	1
15	25K-40200	O-RING, Cover	1
16	948823	SPRING, Poppet	1
17	948821	POPPET	1
18	———	§HOUSING — See "A"	—
19	———	RELIEF VALVE — See Page V8	—
20	948820	COVER, Poppet	1
21	948815	SPRING, Relief Valve	1
22	25K-40200	O-RING, Cover	1

§Not Sold Separately

WHEN ORDERING PARTS, ALWAYS STATE MODEL AND SERIAL NO. OF MACHINE

https://truckmanualshub.com/

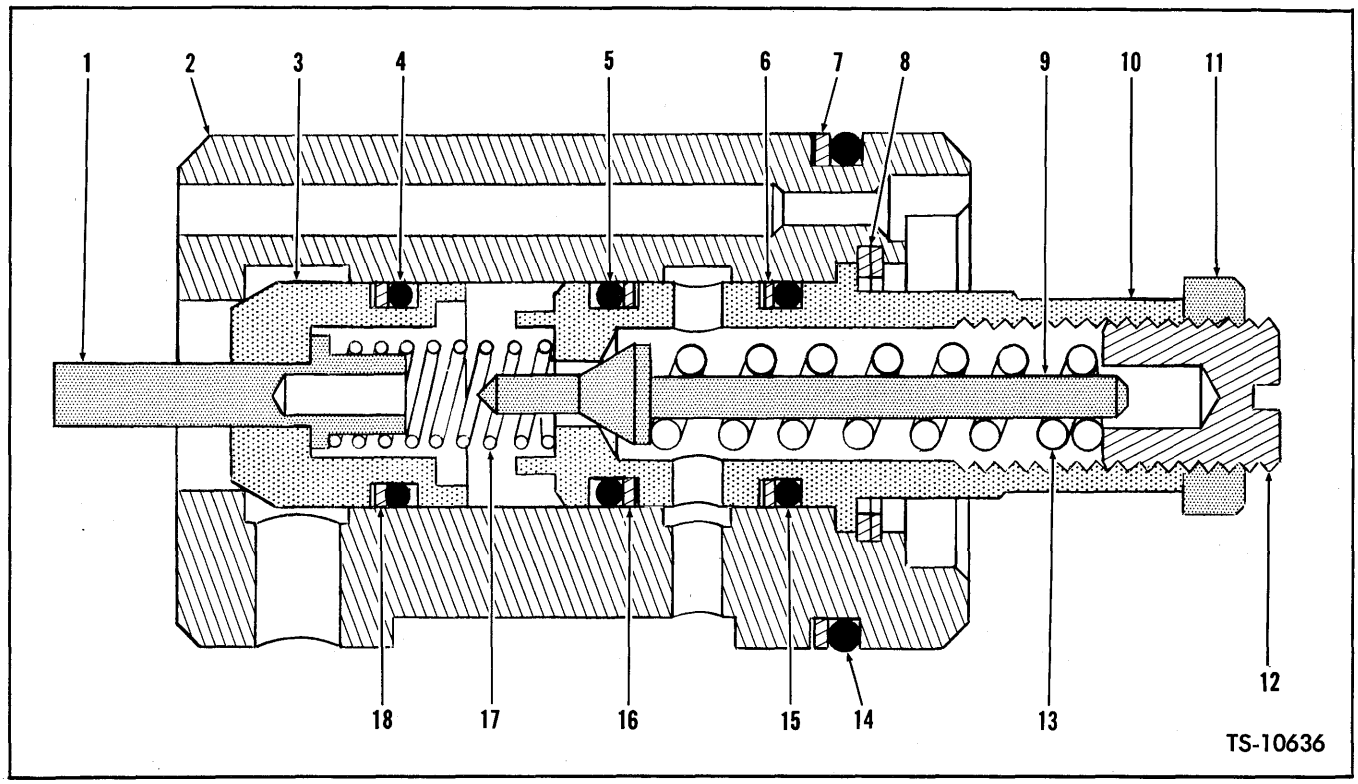

VALVE, RELIEF

No. Item	No. Part	Description	No. Req'd.
A	948854	RELIEF VALVE ASSY (Inc. 1 thru 18)	1
1	948824	PISTON	1
2	———	§POPPET — See Item A	—
3	———	§POPPET — See Item A	—
4	948063	O-RING, Poppet	1
5	948063	O-RING, Plug	1
6	948849	RING, Plug Back-Up	1
7	948852	RING, Poppet Back-Up	1
8	948850	RING, Snap	2
9	———	§POPPET — See Item A	—
10	———	§PLUG — See Item A	—
11	8D-06	NUT, Jam	1
12	948848	SCREW, Adjusting	1
13	948825	SPRING, Poppet	1
14	948851	O-RING, Poppet	1
15	948063	O-RING, Plug	1
16	948849	RING, Plug Back-Up	1
17	948129	SPRING, Piston	1
18	948849	RING, Poppet Back-Up	1

§Not Sold Separately

WHEN ORDERING PARTS, ALWAYS STATE MODEL AND SERIAL NO. OF MACHINE

https://truckmanualshub.com/

https://truckmanualshub.com/

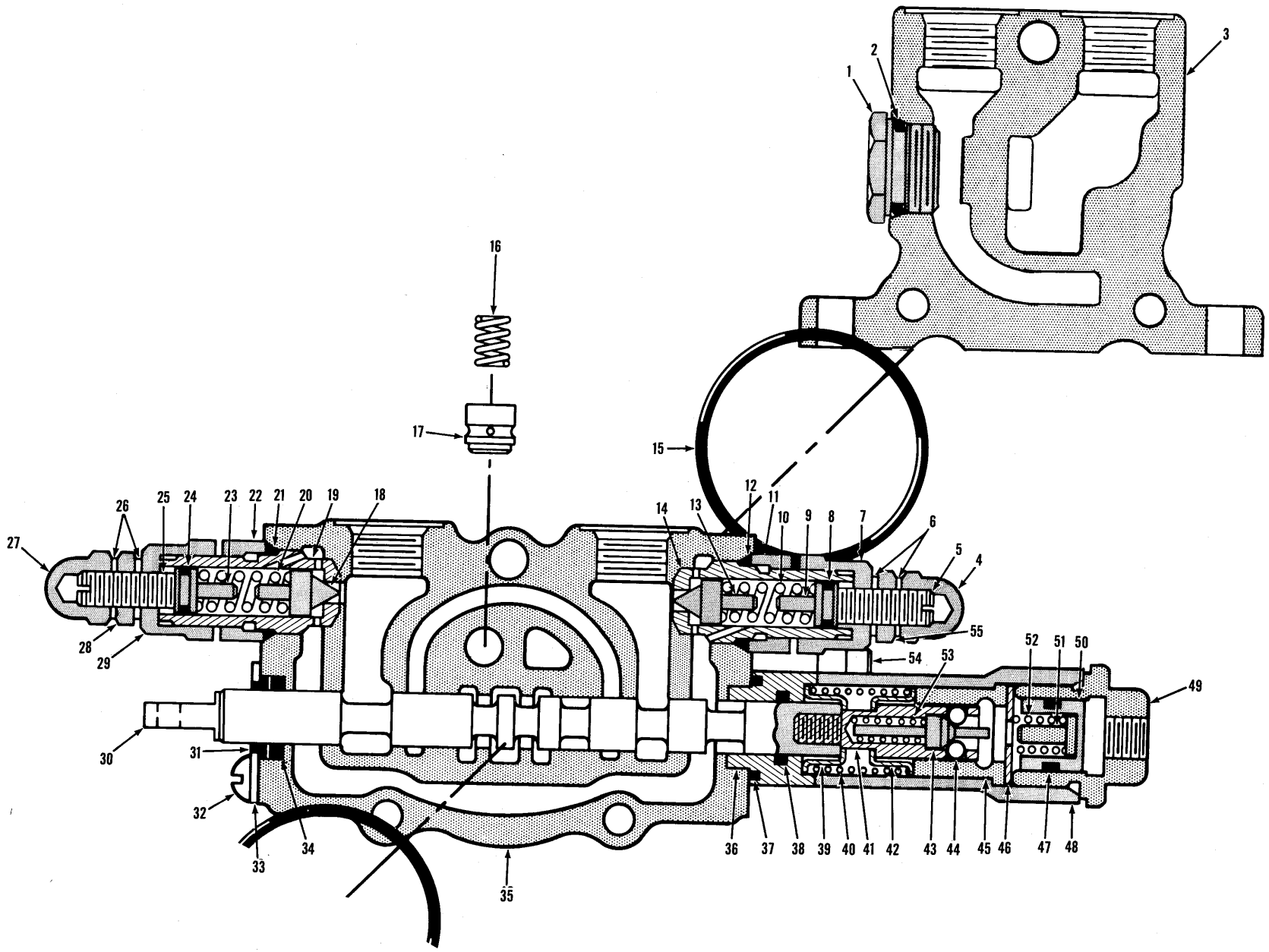

VALVE ASSEMBLY — PILOT

TS-10682

https://truckmanualshub.com/

VALVE ASSEMBLY — PILOT

Item No.	Part No.	Description	No. Req'd.
A	1549451	CONTROL VALVE ASSY (Inc. 1 thru 113)	1
B	948979	PLUNGER SECTION ASSY (Inc. 16, 17, 30 thru 54, 68)	1
C	948903	PLUNGER SECTION ASSY (Inc. 66, 67, 81 thru 106, 101)	1
D	1545915	RELIEF VALVE (Inc. 18 thru 29 or 65 thru 107)	2
E	1545916	RELIEF VALVE (Inc. 4 thru 14, 55 or 69 thru 80)	2
1	948810	PLUG, Inlet Section	1
2	91F-7	O-RING, Plug	1
3	948805	INLET & OUTLET SECTION ASSY (Inc. 1, 2 & 15)	1
4	———	§NUT, Acorn — See "E"	—
5	———	§SCREW, Adjusting — See "E"	—
6	———	§WASHER, Jam — See "E"	—
7	———	§CAP, Relief Valve — See "E"	—
8	———	§O-RING, Spring Guide — See "E"	—
9	———	§GUIDE, Spring — See "E"	—
10	———	§SPRING, Relief Valve — See "E"	—
11	———	§NUT, Lock — See "E"	—
12	91F-7	O-RING, Relief Valve	1
13	———	§POPPET, Relief — See "E"	—
14	———	§SEAT, Poppet — See "E"	—
15	25K-40108	O-RING, Valve Section to Valve Section	1
16	948022	SPRING, Poppet	1
17	948015	POPPET	1
18	———	§POPPET, Relief Valve — See "D"	—
19	———	§SEAT, Poppet — See "D"	—
20	———	§SPRING, Poppet — See "D"	—
21	91F-7	O-RING, Relief Valve	1
22	———	§CAP, Relief Valve — See "D"	—
23	———	§GUIDE, Spring — See "D"	—
24	———	§O-RING, Guide — See "D"	—
25	———	§SCREW, Adjusting	—
26	———	§WASHER, Jam Nut — See "D"	—
27	———	§NUT, Acorn — See "D"	—
28	———	§NUT, Jam — See "D"	—
29	———	§CAP, Relief Valve — See "D"	—
30	———	§PLUNGER, Operating — See "A" & "B"	—
31	948021	WIPER, Plunger	1
32	71G-406	BOLT, Plate to Housing	2
33	948016	PLATE, Wiper & Seal Retainer	1
34	25K-30018	O-RING, Plunger	1
35	———	§HOUSING, Plunger Section — See "A" & "B"	—
36	948981	SPACER, Cover	1
37	25K-30024	O-RING, Spacer to Housing	1
38	25K-30018	O-RING, Plunger	1
39	948017	SEAT, Spring	1
40	948018	SPRING, Plunger Return	1
41	948019	SEAT, Detent	1
42	948017	SEAT, Spring	1
43	948029	CAM, Detent	1
44	877420	BALL, Detent	4
45	948023	SLEEVE, Detent	1
46	948030	SPACER, Detent	1
47	25K-30018	O-RING, Piston	1
48	948980	CAP, Plunger	1
49	948028	PLUG, Detent	1
50	948024	PISTON, Detent	1
51	948025	PIN, Detent	1

§Not Sold Separately

WHEN ORDERING PARTS, ALWAYS STATE MODEL AND SERIAL NO. OF MACHINE

https://truckmanualshub.com/

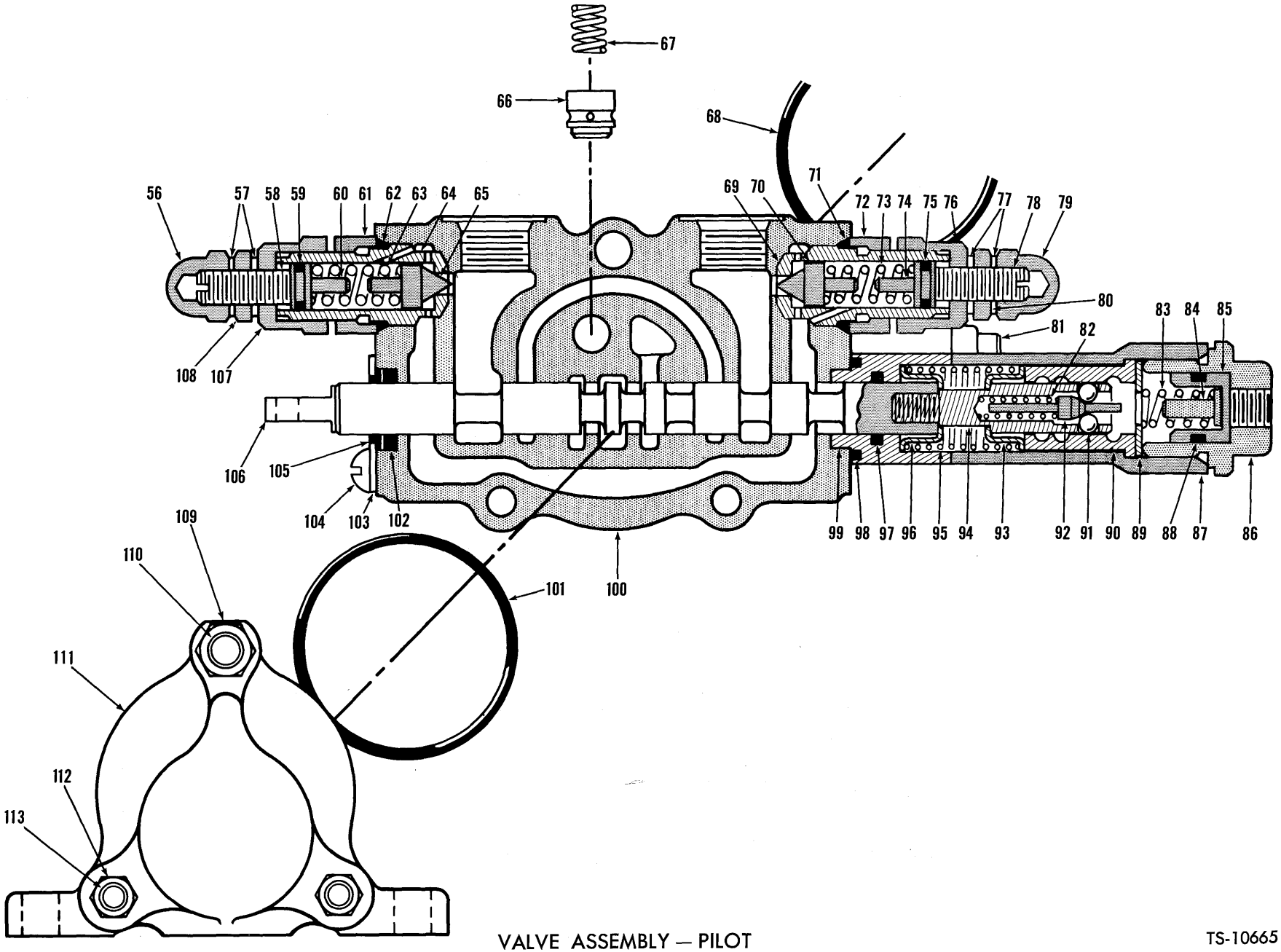

VALVE ASSEMBLY — PILOT

TS-10665

https://truckmanualshub.com/

VALVE ASSEMBLY — PILOT (Continued)

Item No.	Part No.	Description	No. Req'd.
52	948026	SPRING, Piston	1
53	948020	SPRING, Detent	1
54	948032	BOLT, Cap to Housing	2
55	———	§NUT, Relief Valve — See "E"	—
56	———	§NUT, Acorn — See "E"	—
57	———	§WASHER, Jam Nut — See "E"	—
58	———	§SCREW, Adjusting — See "E"	—
59	———	§O-RING, Spring Guide — See "E"	—
60	———	§GUIDE, Spring — See "E"	—
61	———	§NUT, Lock — See "E"	—
62	91F-7	O-RING, Relief Valve	1
63	———	§SPRING, Relief Valve — See "E"	—
64	———	§SEAT, Poppet — See "E"	—
65	———	§POPPET, Relief Valve — See "E"	—
66	948015	POPPET	1
67	948022	SPRING, Poppet	1
68	25K-40108	O-RING, Valve Section to Valve Section	1
69	———	§SEAT, Poppet — See "D"	—
70	———	§POPPET, Relief Valve — See "D"	—
71	91F-7	O-RING, Relief Valve	1
72	———	§CAP, Relief Valve — See "D"	—
73	———	§SPRING, Relief Valve — See "D"	—
74	———	§GUIDE, Spring — See "D"	—
75	———	§O-RING, Spring Guide — See "D"	—
76	———	§CAP, Relief Valve — See "D"	—
77	———	§WASHER, Jam Nut — See "D"	—
78	———	§SCREW, Adjusting — See "D"	—
79	———	§NUT, Acorn — See "D"	—
80	———	§NUT, Jam — See "D"	—
81	11G-428	BOLT, Cover to Housing	2
82	948020	SPRING, Detent	1
83	948026	SPRING, Piston	1
84	948025	PIN, Detent	1
85	948024	PISTON	1
86	948028	PLUG, Piston	1
87	948980	CAP, Detent	1
88	25K-30018	O-RING, Piston	1
89	948030	SPACER	1
90	948034	SLEEVE, Detent	1
91	877420	BALL, Detent	4
92	948029	CAM, Detent	1
93	948017	SEAT, Spring	1
94	948033	PIN, Detent	1
95	948018	SPRING, Plunger Return	1
96	948017	SEAT, Spring	1
97	25K-30018	O-RING, Plunger	1
98	25K-30024	O-RING, Spacer to Housing	1
99	948981	SPACER, Cover	1
100	———	§HOUSING, Plunger Section	—
101	25K-40108	O-RING, Valve Section to Valve Section	1
102	25K-30018	O-RING, Plunger	1
103	948016	PLATE, Wiper Retainer	1
104	71G-406	SCREW, Plate to Housing	1
105	948021	WIPER, Plunger	1
106	———	§PLUNGER, Operating	—
107	———	§CAP, Relief Valve	—
108	———	§NUT, Jam — See "F"	—
109	62D-06	NUT	2
110	948014	TIE ROD	1
111	948010	COVER, Valve End	1
112	1D-06	NUT	4
113	948013	TIE ROD	2

§Not Sold Separately

WHEN ORDERING PARTS, ALWAYS STATE MODEL AND SERIAL NO. OF MACHINE

https://truckmanualshub.com/

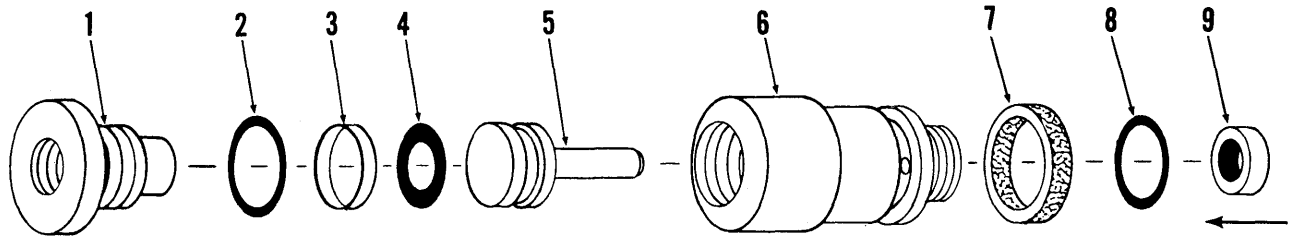

ASSEMBLE SEAL LIP IN THIS DIRECTION

TS-6574-P

VALVE ASSEMBLY — TRANSMISSION DECLUTCH

Item No.	Part No.	Description	No. Req'd.
A	217927	VALVE ASSY (Inc. 1 thru 9)	1
1	217928	PLUG, Piston Stop	1
2	91F-8	"O" RING, Plug	1
3	227672	RING, Piston	1
4	25K-30020	"O" RING, Piston	1
5	227673	PISTON, Valve	1
6	217929	HOUSING, Valve	1
7	228931	SEAL, Band	1
8	25K-30022	"O" RING, Housing	1
9	224315	SEAL, Piston Oil	1

NOTES

WHEN ORDERING PARTS, ALWAYS STATE MODEL AND SERIAL NO. OF MACHINE

https://truckmanualshub.com/

https://truckmanualshub.com/

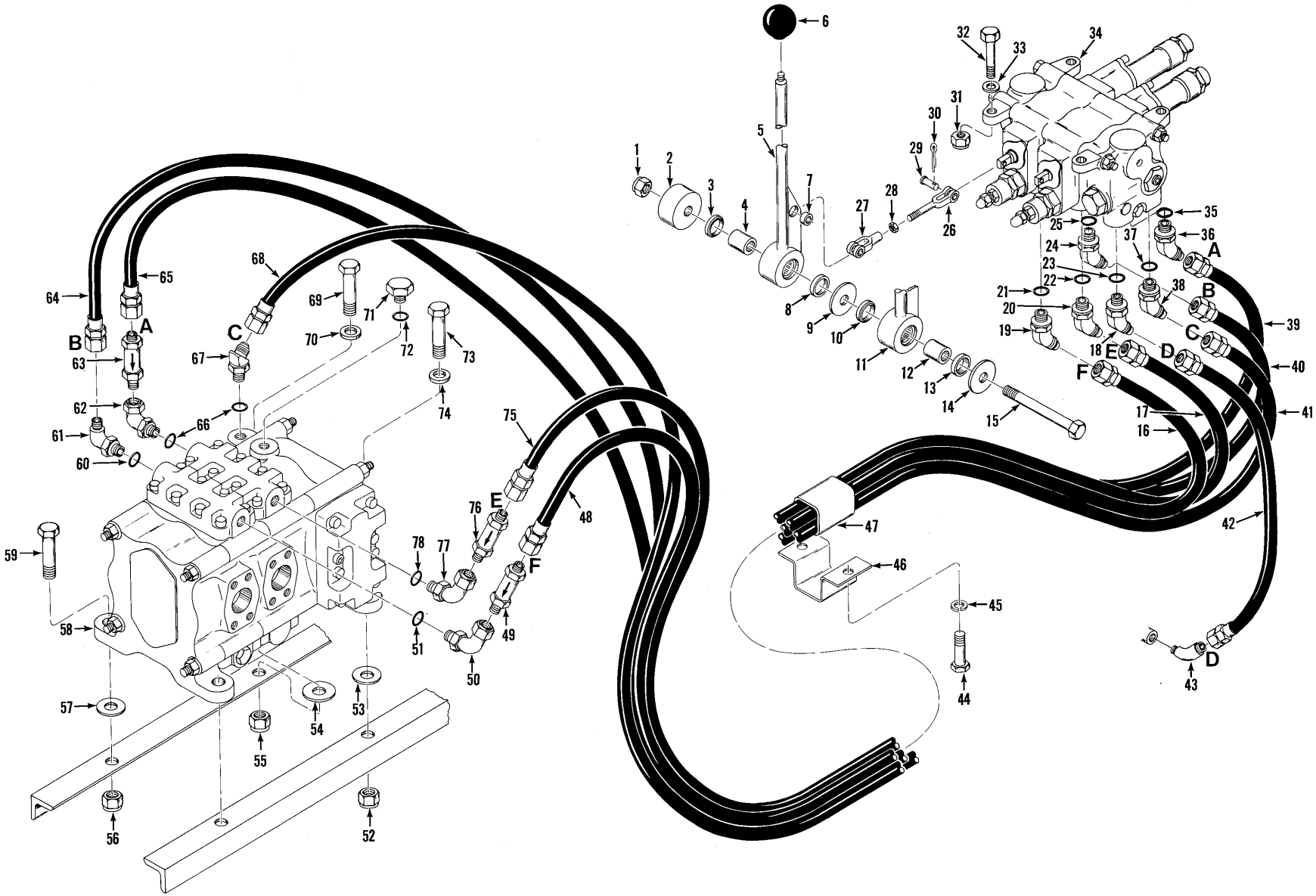

VALVE CONTROLS & PIPING

TS-11500 B

https://truckmanualshub.com/

VALVE CONTROLS & PIPING

Item No.	Part No.	Description	No. Req'd.
1	18D-08	NUT, Lever Mounting	1
2	730482	SPACER, Lever Mounting	1
3	1522535	SEAL, Grease	1
4	1503251	SPACER, Lever	1
5	1542767	LEVER, Boom Control (Inc. 5A)	1
5A	675227	†BEARING, Lever	1
6	509772	KNOB, Bucket & Boom Control Lever	2
7	1542764	BUSHING, Lever to Clevis Pin	2
8	1522535	SEAL, Grease	1
9	584502	WASHER, Lever Mounting	1
10	1522535	SEAL, Grease	1
11	1542769	LEVER, Bucket Control (Inc. 11A)	1
11A	675227	BEARING, Lever	1
12	1503251	SPACER, Lever	1
13	1522535	SEAL, Grease	1
14	584502	WASHER, Lever Mounting	1
15	18C-896	BOLT, Lever Mounting	1
16	1538812	HOSE, Valve to Valve	1
17	1538812	HOSE, Valve to Valve	1
18	18K-7	ELBOW, Hose to Valve (Inc. 23)	1
19	18K-6	ELBOW, Hose to Valve (Inc. 21)	1
20	18K-6	ELBOW, Hose to Valve (Inc. 22)	1
21	91F-6	O-RING, Elbow	1
22	91F-6	O-RING, Elbow	1
23	91F-7	O-RING, Elbow	1
24	18K-6	ELBOW, Hose to Valve (Inc. 25)	1
25	91F-6	O-RING, Elbow	1
26	1537881	ROD ASSY (Inc. 27, 28)	2
27	2J-4200	CLEVIS, Lever to Valve	2
28	8D-04	NUT, Jam	2
29	4F-04051	PIN, Clevis	4
30	1F-207	COTTER, Clevis Pin	4
31	18D-06	NUT, Valve Mounting	4
32	24C-628	BOLT, Valve Mounting	4
33	656672	WASHER, Valve Mounting	4
34	———	VALVE, Pilot — See Index	—
35	91F-6	O-RING, Elbow	1
36	18K-6	ELBOW, Hose to Valve (Inc. 35)	1
37	91F-7	O-RING, Elbow	1
38	18K-7	ELBOW, Hose to Valve (Inc. 37)	1
39	1538812	HOSE, Valve to Valve	1
40	1538812	HOSE, Valve to Valve	1
41	1300303	HOSE, Valve to Valve	1
42	562796	HOSE, Valve to Reservoir	1
43	84F-7	ELBOW, Hose to Reservoir	1
44	24C-820	BOLT, Clamp to Frame	4
45	4E-08	LKWSHR, Clamp to Frame	4
46	1537986	CLAMP, Hose	2
47	1M-22040	HOSE, Hose Protection	3
48	———	HOSE, Valve to Valve (See 16)	1
49	1510741	VALVE, Restrictor	1
50	1304056	ELBOW, Valve to Valve (Inc. 51)	1
51	91F-6	O-RING, Elbow	1
52	18D-14	NUT, Valve Mounting	1
53	1512415	WASHER, Valve Mounting	1
54	1512415	WASHER, Valve Mounting	1
55	18D-14	NUT, Valve Mounting	1
56	18D-14	NUT, Valve Mounting	1
57	1512415	WASHER, Valve Mounting	1
58	———	VALVE, Main — See Index	—
59	24C-1444	BOLT, Valve Mounting	1
60	91F-6	O-RING, Elbow	1
61	17K-6	ELBOW, Hose to Valve	1
62	1304056	ELBOW, Valve to Valve (Inc. 66)	1
63	1510741	VALVE, Restrictor	1
64	———	HOSE, Valve to Valve — See 40	1
65	———	HOSE, Valve to Valve — See 39	1
66	91F-6	O-RING, Elbow	2
67	1547152	ELBOW, Hose to Valve (Inc. 66)	1
68	———	HOSE, Valve to Valve — See 42	1
69	24C-1444	BOLT, Valve Mounting	1
70	25E-29	WASHER, Valve Mounting	1
71	24K-7	PLUG, Pipe (Inc. 72)	1
72	91F-7	O-RING, Plug	1
73	24C-1444	BOLT, Valve Mounting	1
74	25E-29	WASHER, Valve Mounting	1
75	———	HOSE, Valve to Valve — See 17	1
76	1512096	VALVE, Restrictor	1
77	1304056	ELBOW, Valve to Valve	1
78	91F-6	O-RING, Elbow	1

†Not Illustrated

WHEN ORDERING PARTS, ALWAYS STATE MODEL AND SERIAL NO. OF MACHINE

https://truckmanualshub.com/

https://truckmanualshub.com/

"W" GROUP

CONTENTS

Wheel and Tire Data ..... W 2

https://truckmanualshub.com/

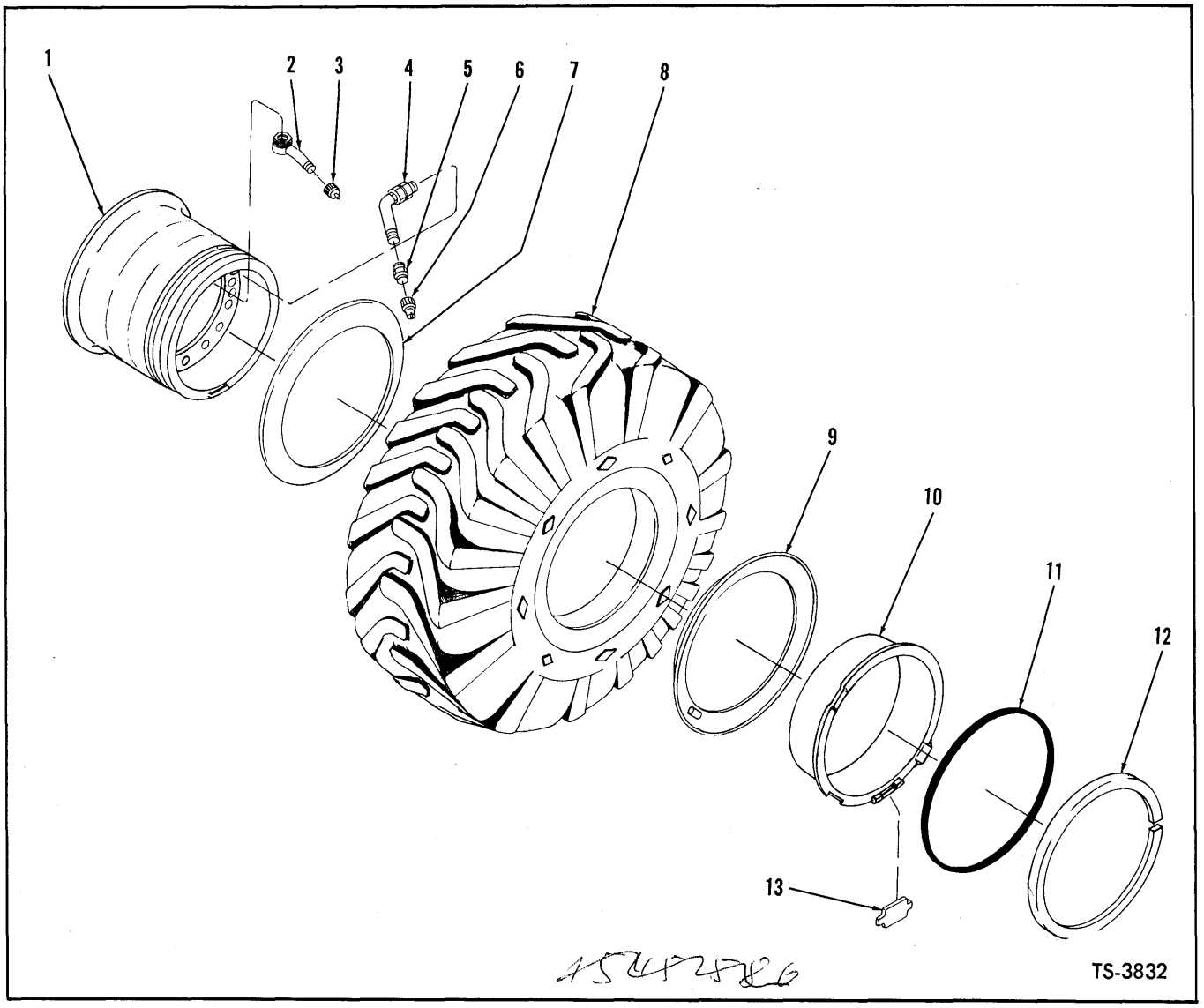

WHEEL & TIRE DATA

Item No.	Part No.	Description	No. Req'd.
1	1546079	WHEEL	4
2	531112	STEM, Water Filling (Inc. 2A, 2B, 3)	4
2A	529605	†NUT	4
2B	529606	†GROMMET	4
3	531111	CAP	4
4	509445	STEM, Valve (Inc. 5, 6)	4
5	551684	ADAPTER, Valve Stem	4
6	551685	CAP, Valve Stem	4
7	513113	FLANGE	4
8	———	§TIRE	4
9	513113	FLANGE	4
10	523252	BAND, Bead Seat	4
11	513117	O-RING	4
12	523253	RING, Lock	4
13	886799	DRIVER	4
14	15G-1416	†SCREW, Puller Holes	12

†Not Illustrated
§Not Sold Separately

WHEN ORDERING PARTS, ALWAYS STATE MODEL AND SERIAL NO. OF MACHINE

https://truckmanualshub.com/

"Z" GROUP

CONTENTS

Alcohol Injector Z3
Cab Assembly Z5
Canopy Roll Bar Z8
Defroster Fan Assembly Z9
Heater Assembly Z10
Heater Installation Z11
Lifting Lugs & Decals Z12
Side Panels Z13
Valve Assembly — 3 Spool — Main ..... Z15—Z19
Valve Assembly — 3 Spool — Pilot ..... Z21—Z25
Valve Controls — 3 Spool Z27
Valve Installation & Parts — 3 Spool Z29
Windshield Wipers — Front & Rear Z31

https://truckmanualshub.com/

https://truckmanualshub.com/

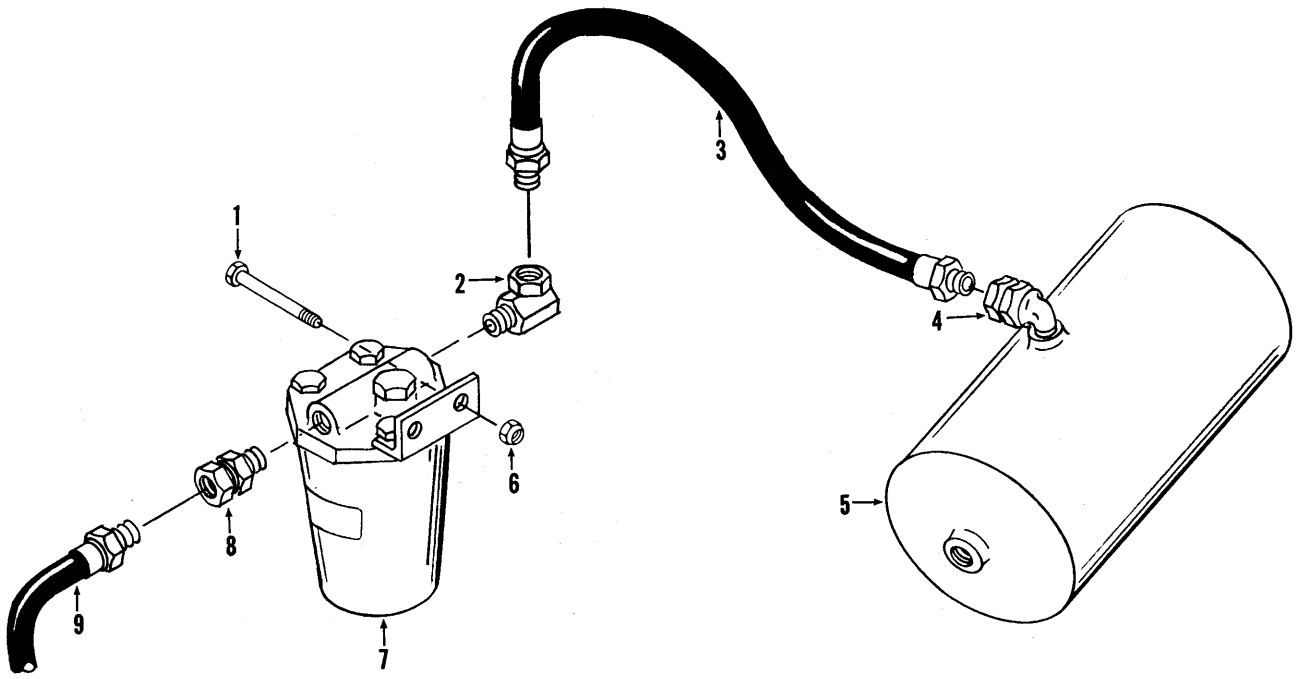

TS-11651 B

ALCOHOL INJECTOR

No. Item	No. Part	Description	No. Req'd.
1	24C-616	BOLT, Injector Mounting	2
2	31F-4	ADAPTER, Injector to Hose	1
3	593268	HOSE, Tank to Injector	1
4	731333	ELBOW, Tank to Hose	1
5	———	AIR TANK — See Index	—
6	18D-06	NUT, Injector Mounting	2
7	1545296	ALCOHOL INJECTOR	1
8	36F-4	ADAPTER, Injector to Hose	1
9	1520490	HOSE, Tube to Injector	1

WHEN ORDERING PARTS, ALWAYS STATE MODEL AND SERIAL NO. OF MACHINE

https://truckmanualshub.com/

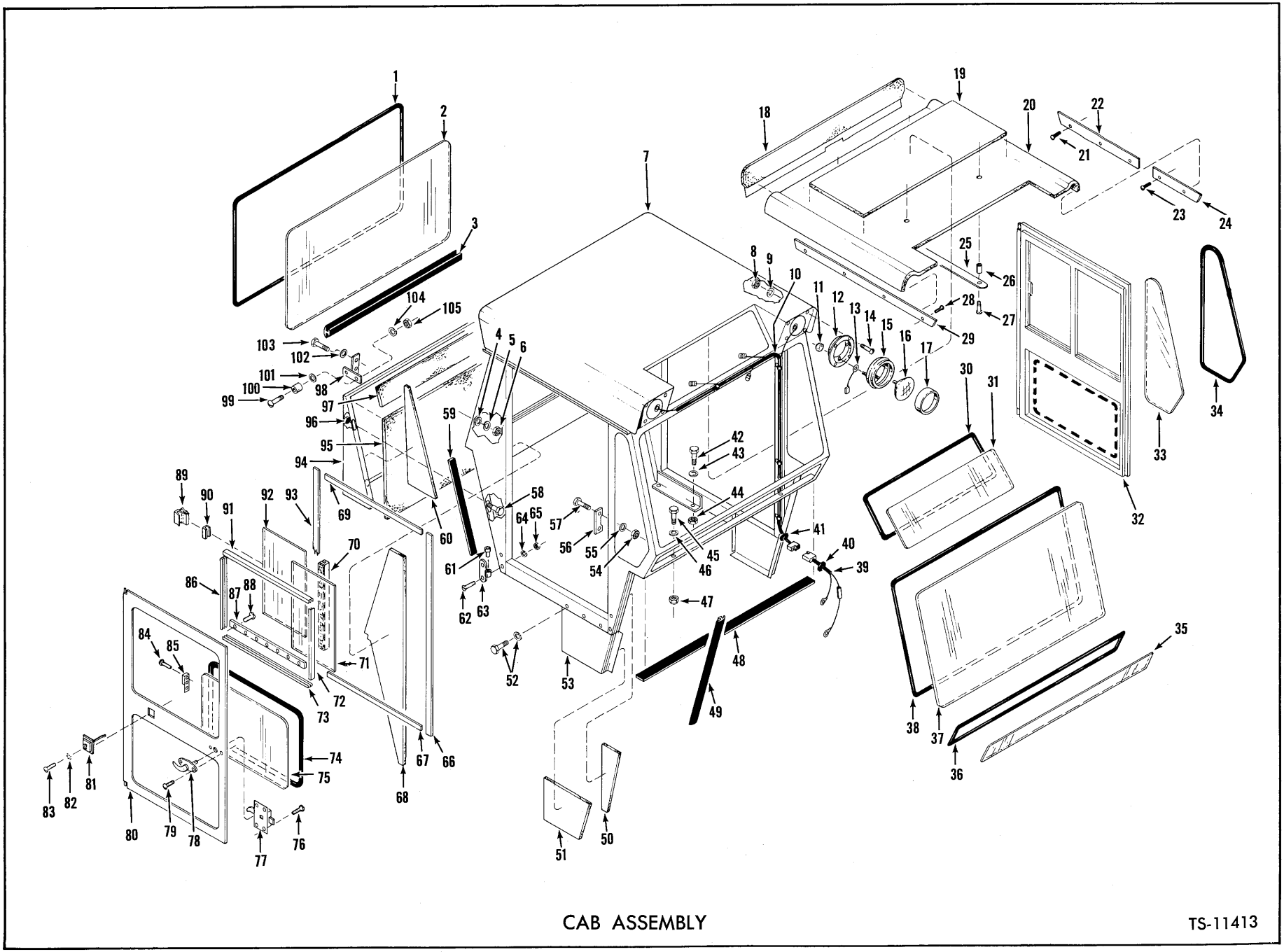

CAB ASSEMBLY

TS-11413

https://truckmanualshub.com/

CAB ASSEMBLY

Item No.	Part No.	Description	No. Req'd.
A	1536572	CAB ASSY (Inc. 1 thru 9, 12, 14, 30 thru 38, 48, 49, 52 thru 57, 59, 61 thru 67, 69 thru 93, 98 thru 105)	1
B	1514801	CAB ASSY (Inc. 1 thru 9, 12, 14, 18 thru 38, 48 thru 57, 59, 61 thru 93, 98 thru 105)	1
1	569694	MOULDING, Rear Window	11 ft.
2	———	§GLASS PATTERN, Rear Window (See 106)	—
3	943623	WEATHERSTRIP, Cab — Rear	5 ft.
4	619018	WASHER, Door Latch Strike	4
5	4E-04	LKWSHR, Door Latch Strike	4
6	1D-04	NUT, Door Latch Strike	4
7	———	§CAB (See "A")	—
8	12D-10	NUT, Headlamp Adapter Attaching	8
9	17E-10	LKWSHR, Headlamp Adapter Attaching	8
10	1544320	WIRE HARNESS, Floodlamp	1
10A	30H-14	†CLIP, Wire Harness	3
11	50D-10	NUT, Headlamp Attaching	6
12	568675	ADAPTER, Headlamp	2
13	540882	WIRE, Headlamp Ground	2
14	85G-1012	SCREW, Adapter to Cab	8
15	582057	HEADLAMP ASSEMBLY (Inc. 16, 17)	2
16	551244	SEALED UNIT, Headlamp	2
17	944977	RETAINER, Headlamp	2
18	1543830	PANEL — Rear Top	1
19	1543825	BACKING, Headliner	1
20	1543826	HEADLINER	1
21	14G-608	SCREW, Trimstrip to Cab	3
22	1514767	TRIMSTRIP, Headliner — L.H. — Rear	1
23	14G-608	SCREW, Trimstrip to Cab	2
24	1514765	TRIMSTRIP, Headliner — L.H. — Front	1
25	1514764	STRAP, Headliner Support	2
26	1514763	SPACER, Strap to Cab	4
27	14G-824	SCREW, Strap to Cab	4
28	85G-1012	SCREW, Trimstrip to Cab	4
29	1514766	TRIMSTRIP, Headliner — R.H.	1
30	569694	MOULDING, Roof Glass	6 ft.
31	———	§GLASS PATTERN, Roof Glass (See 106)	—
32	———	DOOR ASSY (See 80)	1
33	———	§GLASS PATTERN, Quarter Window (See 106)	—
34	569694	MOULDING, Quarter Window	10 ft.
35	———	§GLASS PATTERN, Lower Windshield (See 106)	—
36	569694	§MOULDING, Lower Windshield	12 ft.
37	———	§GLASS PATTERN, Upper Windshield (See 106)	—
38	569694	MOULDING, Upper Windshield	10 ft.
39	1544319	WIRE HARNESS, Cockpit	1
40	515069	GROMMET, Wire Harness	1
41	515069	GROMMET, Wire Harness	1
42	24C-624	BOLT, Cab Mounting — Side	4
43	616783	WASHER, Cab Mounting — Side	4
44	18D-06	LOCKNUT, Cab Mounting — Side	4
45	24C-628	BOLT, Cab Mounting — Front	2
46	616783	WASHER, Cab Mounting — Front	2
47	18D-06	LOCKNUT, Cab Mounting — Front	2
48	1521844	WEATHERSTRIP, Cab — Front	4 ft.
49	569692	WEATHERSTRIP, Cab — Front	5 ft.
50	1543800	PANEL, Front Door Post — R.H.	1
50A	1543799	†PANEL, Front Door Post — L.H.	1
51	1543828	PANEL, Kick Plate — R.H.	1

§Not Sold Separately
†Not Illustrated

WHEN ORDERING PARTS, ALWAYS STATE MODEL AND SERIAL NO. OF MACHINE

https://truckmanualshub.com/

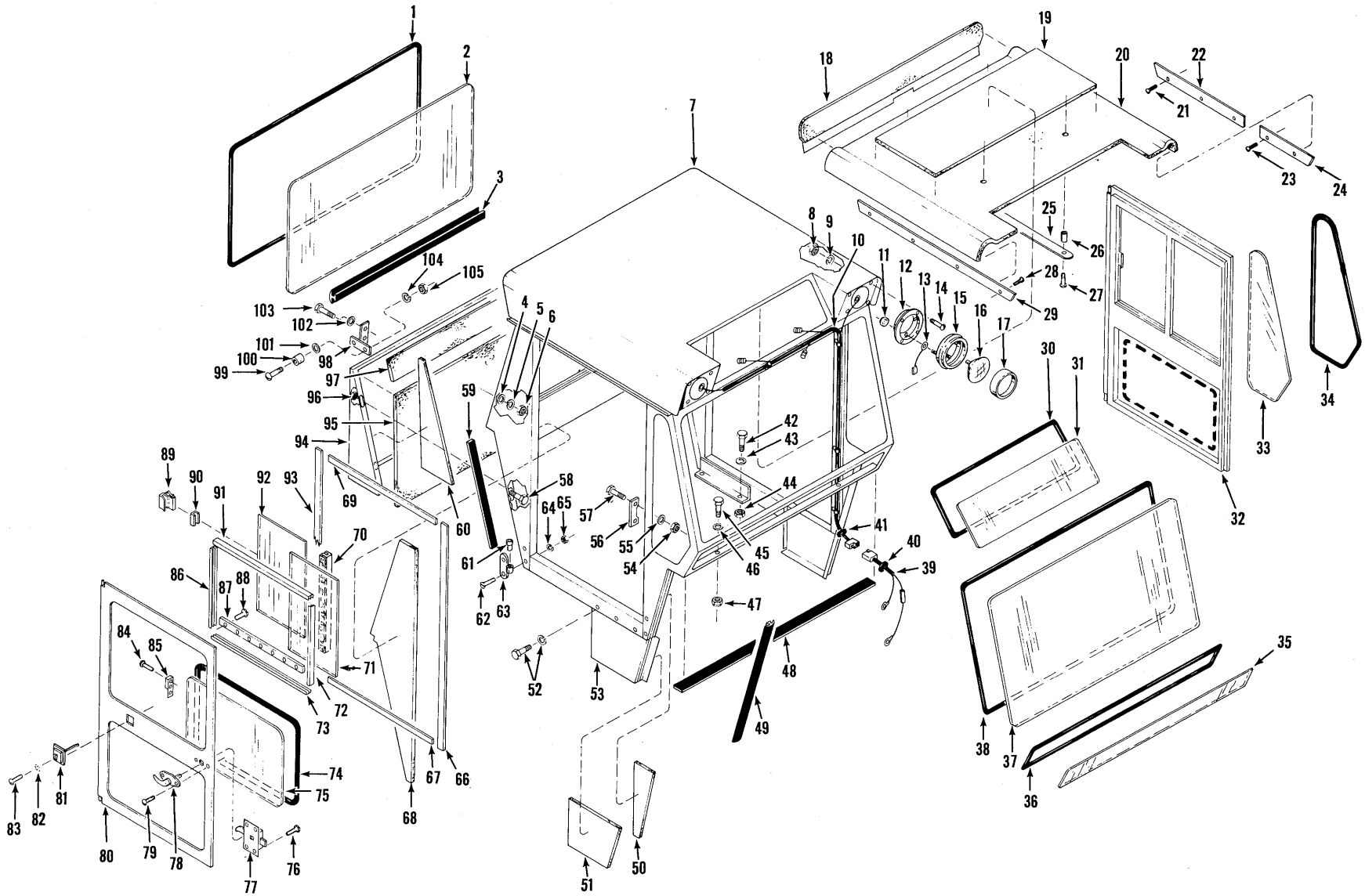

CAB ASSEMBLY

TS-11413

https://truckmanualshub.com/

CAB ASSEMBLY (Continued)

Item No.	Part No.	Description	No. Req'd.
51A	1543827	†PANEL, Kick Plate — L.H.	1
52	17C-410	BOLT, Quarter Panel to Cab	6
52A	4E-04	LKWSHR, Quarter Panel to Cab	6
53	568686	PANEL, Lower Quarter — R.H.	1
53A	568687	†PANEL, Lower Quarter — L.H.	1
54	1D-04	NUT, Door Lock Strike Attaching	4
55	4E-04	LKWSHR, Door Lock Strike Attaching	4
56	945576	STRIKE, Door Lock	2
57	47G-412	SCREW, Door Lock Strike Attaching	4
58	24C-616	BOLT, Rear Panel to Cab	5
59	943623	WEATHERSTRIP, Cab — Rear	3 ft.
60	1543803	PANEL, Rear Cover Side — R.H.	1
60A	1543801	†PANEL, Rear Cover Side — L.H.	1
61	568700	BUSHING, Cab Door Hinge	4
62	76G-512	SCREW, Hinge to Cab	8
63	945555	HINGE, Cab Door — R.H. Upper & L.H. Lower	2
63A	945554	†HINGE, Cab Door — L.H. Upper & R.H. Lower	2
64	4E-05	LKWSHR, Cab Door Hinge Attaching	8
65	1D-05	NUT, Cab Door Hinge Attaching	8
66	943623	WEATHERSTRIP, Door — Front	7 ft.
67	943623	WEATHERSTRIP, Door — Lower	5 ft.
68	1543809	PANEL, Door Post, Rear — R.H.	1
68A	1543808	PANEL, Door Post, Rear — L.H.	1
69	943623	WEATHERSTRIP, Door — Upper	5 ft.
70	139149	CHANNEL, Glass Divider	4 ft.
71	———	§GLASS PATTERN, Sliding Door (See 106)	—
72	569696	CHANNEL, Side Glass Run — Front	4 ft.
73	569696	CHANNEL, Side Glass Run — Lower	4 ft.
74	569694	MOULDING, Door Glass — Lower	10 ft.
75	———	§GLASS PATTERN, Door Glass — Lower (See 106)	—
76	66G-1008	SCREW, Door Lock to Door	8
77	138249	LOCK, Door — R.H.	1
77A	942874	†LOCK, Door — L.H.	1
78	1525710	HANDLE, Door	2
79	32G-1008	SCREW, Handle to Door	4
80	1536571	DOOR — R.H.	1
80A	1536570	†DOOR — L.H.	1
81	560650	CATCH — Door	2
82	17E-10	LKWSHR, Door Catch Attaching	8
83	87G-1010	SCREW, Door Catch Attaching	8
84	5G-606	SCREW & LKWSHR ASSY, Window Lock Strike Attaching	8
85	557465	STRIKE, Window	4
86	569696	CHANNEL, Side Glass Run — Rear	4 ft.
87	945577	RETAINER, Glass Channel	2
88	65G-1008	SCREW, Retainer to Door	14
89	589571	LOCK, Sliding Glass	4
90	946115	RUBBER, Lock to Glass	1 ft.
91	569696	CHANNEL, Side Glass Run — Upper	4 ft.
92	———	§GLASS PATTERN, Sliding Door (See 106)	—
93	943623	WEATHERSTRIP, Door — Rear	7 ft.
94	571854	PANEL, Cab — Rear	1
95	1543804	PANEL, Rear Panel	1
96	18D-06	NUT, Rear Panel to Cab	5
97	1543829	PANEL, Cab, Rear Bottom	1
98	574992	STRIKE, Door Latch — L.H.	1
98A	1501803	†STRIKE, Door Latch — R.H.	1
99	85G-1016	BOLT, Bumper to Strike Latch	2
100	560651	BUMPER, Latch Strike	2
101	874767	SPACER, Bumper Mounting	2
102	619018	WASHER, Latch Strike Attaching	4
103	23C-416	BOLT, Latch Strike Attaching	4
104	17E-10	LKWSHR, Bumper to Strike Attaching	2
105	12D-10	NUT, Bumper to Strike Attaching	2
106	945999	†GLASS PATTERN KIT (Inc. 2, 31, 33, 35, 37, 71, 75 & 92)	1

§Not Sold Separately
†Not Illustrated

WHEN ORDERING PARTS, ALWAYS STATE MODEL AND SERIAL NO. OF MACHINE

https://truckmanualshub.com/

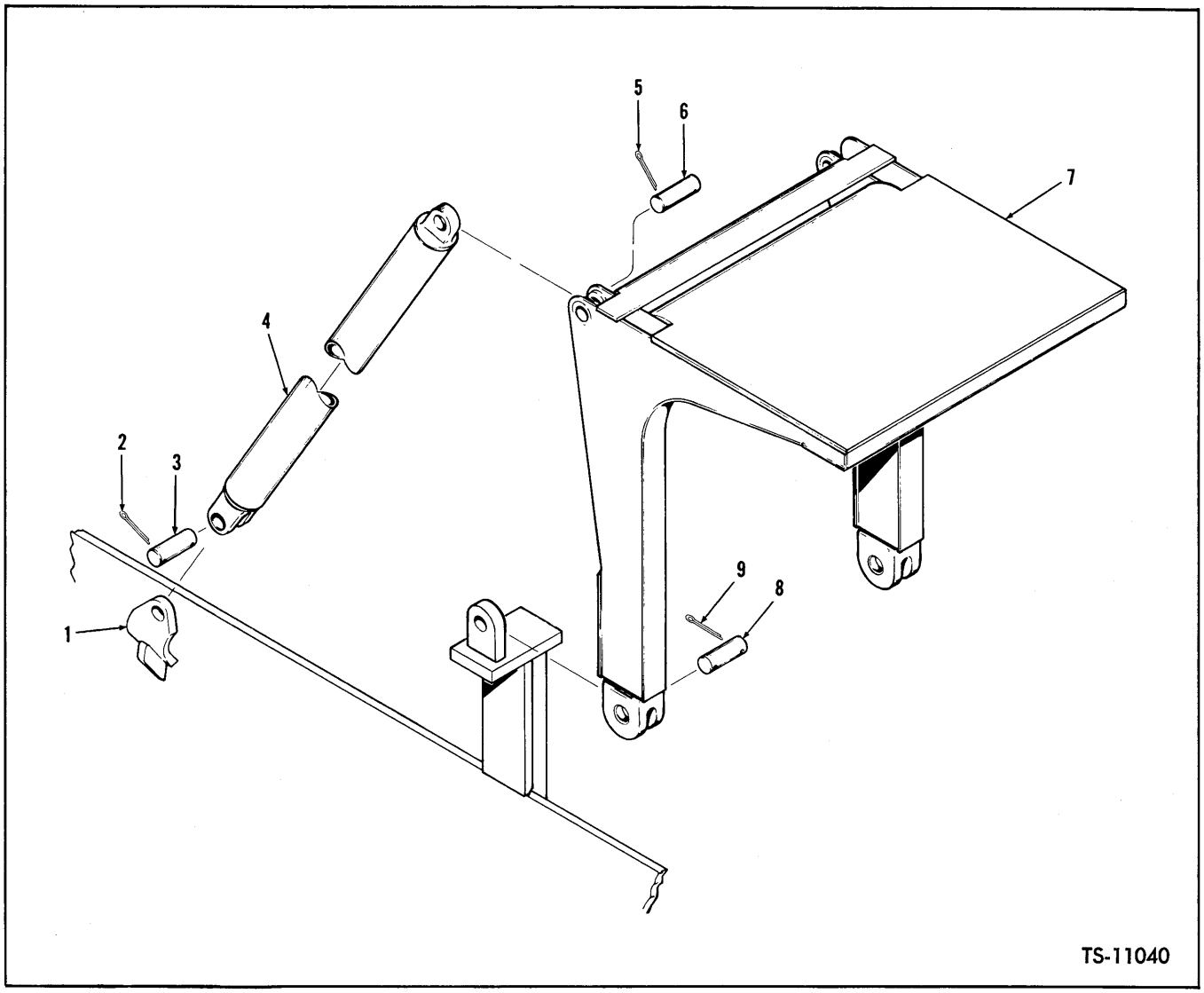

CANOPY ROLL BAR

No. Item	No. Part	Description	No. Req'd.
A	1549193	CANOPY ROLL BAR (Inc. 1-10)	1
1	1513826	MOUNT, Canopy	2
2	1F-1236	PIN, Cotter	2
3	1516040	PIN, Brace to Frame	2
4	1547680	BRACE, Canopy	2
5	1F-1236	PIN, Cotter	2
6	1516040	PIN, Brace to Canopy	2
7	1547690	CANOPY	1
8	1537424	PIN, Canopy to Frame	2
9	1F-1236	PIN, Cotter	2
10	1527745	†SEAT BELT KIT	1

†Not Illustrated

WHEN ORDERING PARTS, ALWAYS STATE MODEL AND SERIAL NO. OF MACHINE

https://truckmanualshub.com/

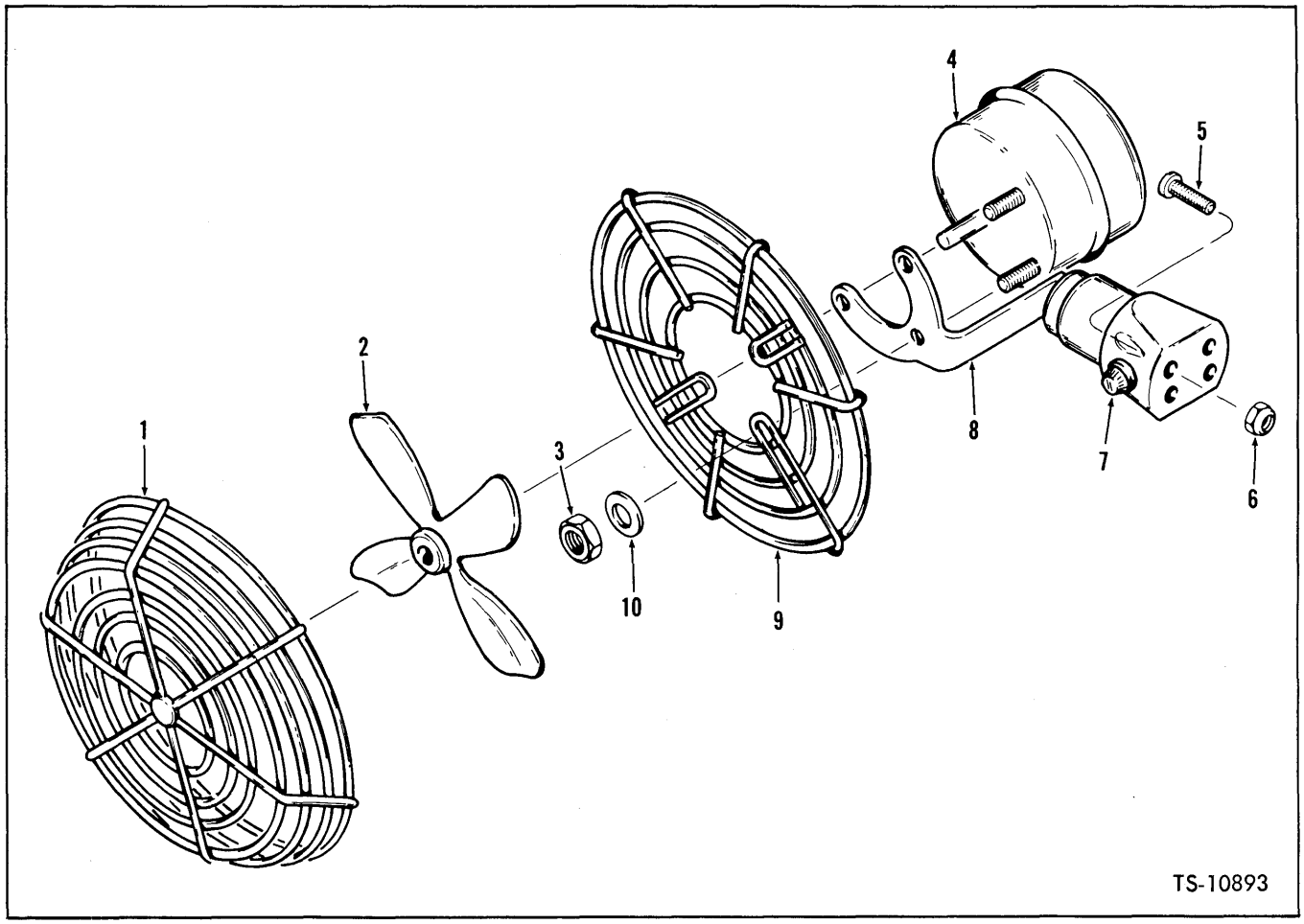

DEFROSTER FAN ASSEMBLY

Item No.	Part No.	Description	No. Req'd.
A	517847	FAN ASSY, Defroster (Inc. 1 thru 4, 7 thru 10)	1
1	949036	GUARD, Fan — Front	1
2	949037	FAN, Defroster	1
3	949054	NUT, Base to Motor	2
4	949033	MOTOR ASSY	1
5	85G-1012	SCREW, Fan to Cab	4
6	50D-10	NUT, Fan to Cab	4
7	949080	SWITCH	1
8	949034	BASE, Fan	1
9	949039	GUARD, Fan — Rear	1
10	664419	WASHER, Base to Motor	2

WHEN ORDERING PARTS, ALWAYS STATE MODEL AND SERIAL NO. OF MACHINE

https://truckmanualshub.com/

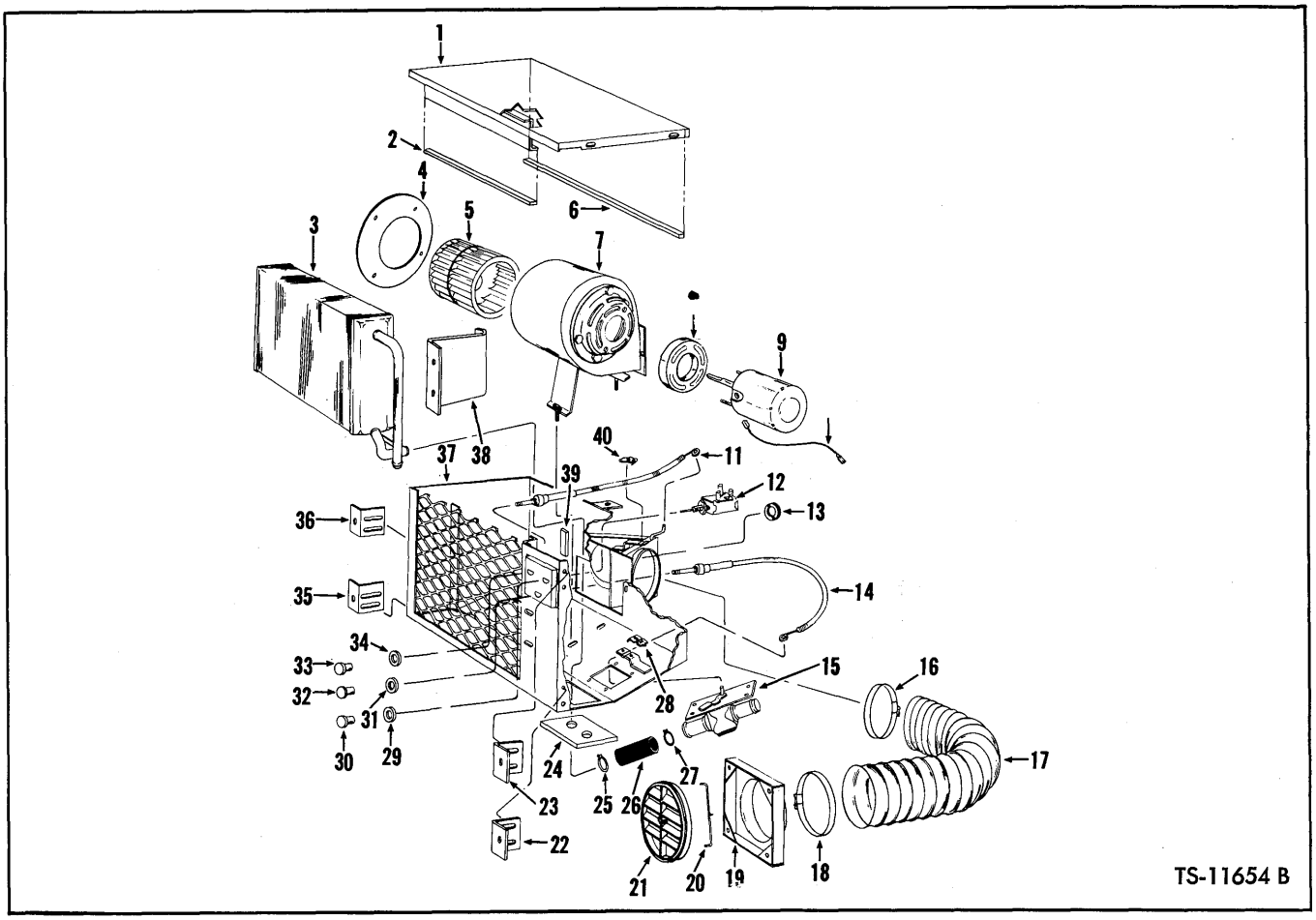

HEATER ASSEMBLY

Item No.	Part No.	Description	No. Req'd.
A	1510661	HEATER ASSY, 24V. (Inc. 1 thru 40)	1
B	948958	BLOWER ASSY, 24V. (Inc. 4 thru 9)	1
1	947977	COVER, Core	1
2	949047	SPONGE SEAL, Cover	1
3	947948	CORE, Heater	1
4	949521	PLATE, Blower	1
5	948992	WHEEL, Blower	1
6	947997	SEAL, Cover	1
7	949522	HOUSING, Blower	1
8	947978	FOIL, Blower	1
9	948978	MOTOR, Blower	1
10	947999	WIRE	1
11	947981	CABLE, Outlet	1
12	947949	SWITCH, Fan Motor	1
13	947982	GROMMET	1
14	947983	CABLE, Valve	1
15	947950	VALVE, Water	1
16	528651	CLAMP	1
17	947995	HOSE, Flex	1
18	528651	CLAMP	1
19	947994	COLLAR ASSY	1
20	947993	SPRING, Retainer	1
21	947992	LOUVER, Plastic	1
22	947990	BRACKET, Mounting	1
23	947990	BRACKET, Mounting	1
24	947991	GASKET, Core Tube	1
25	949048	CLAMP, Hose	1
26	889269	HOSE	1
27	949048	CLAMP, Hose	1
28	947984	CLIP, Cable	1
29	947989	NUT, Fan	1
30	947988	KNOB, Fan	1
31	947989	NUT, Temperature	1
32	947987	KNOB, Temperature	1
33	947986	KNOB, Heat	1
34	947989	NUT, Heat	1
35	947990	BRACKET, Mounting	1
36	947990	BRACKET, Mounting	1
37	947985	CASE	1
38	947976	RETAINER, Core	1
39	949047	SPONGE, Seal	1
40	947984	CLIP, Cable	1

WHEN ORDERING PARTS, ALWAYS STATE MODEL AND SERIAL NO. OF MACHINE

https://truckmanualshub.com/

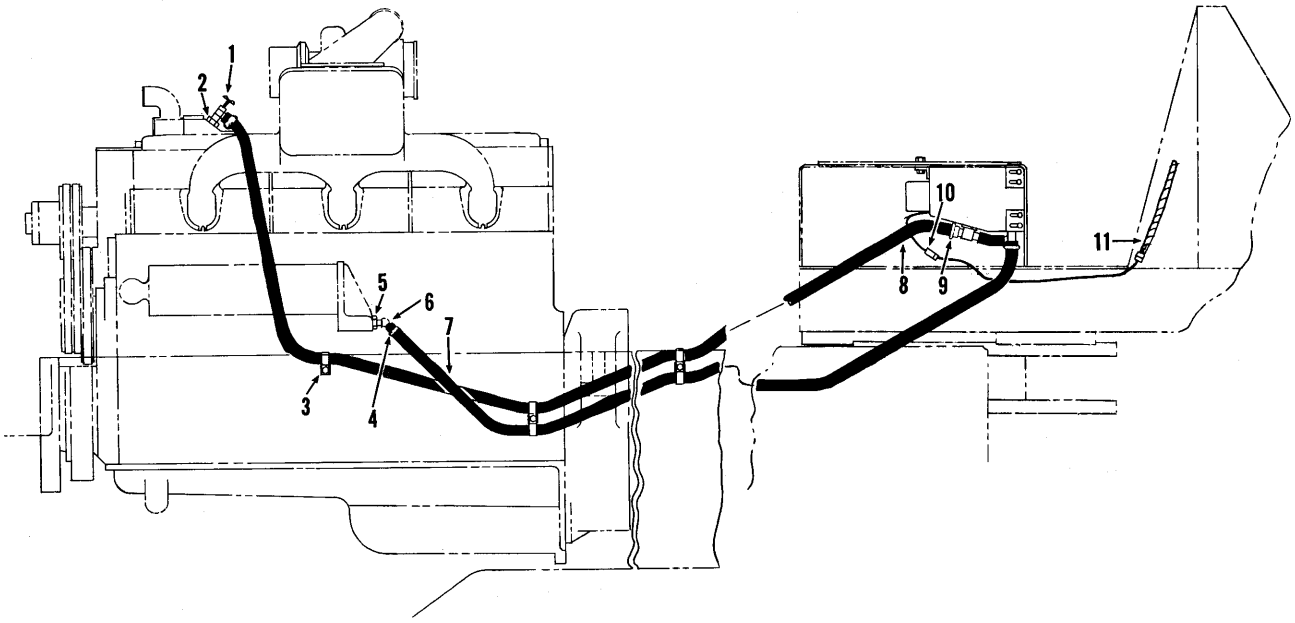

TS-11655 B

HEATER — INSTALLATION

Item No.	Part No.	Description	No. Req'd.
1	552433	VALVE, Heater Shutoff	1
2	356618	BUSHING, Reducer	1
3	30H-50	CLIP, Hose Mounting	5
4	521874	CLAMP, Hose	2
5	356617	BUSHING, Reducing	1
6	666854	NIPPLE	1
7	1529688	‡HOSE, Engine to Heater	—
8	1529688	‡HOSE, Engine to Heater	—
9	521874	CLAMP, Hose	2
10	635583	FUSE — 15 Amp	1
11	1508863	WIRE ASSY (Inc. 10)	1

‡As Required

WHEN ORDERING PARTS, ALWAYS STATE MODEL AND SERIAL NO. OF MACHINE

https://truckmanualshub.com/

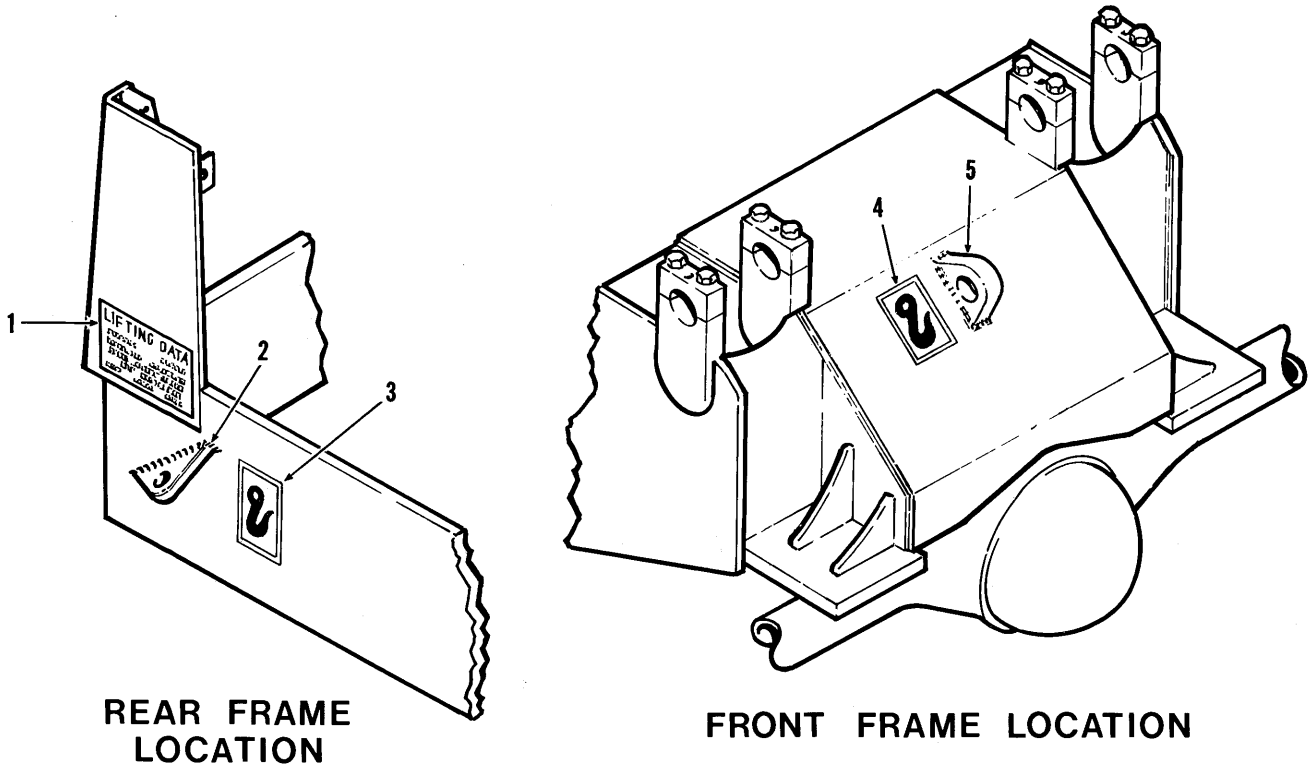

LIFTING LUGS & DECALS

Item No.	Part No.	Description	No. Req'd.
A	1510240	LIFTING LUG & DECAL KIT (Inc. 1 thru 5)	1
1	1547653	DECAL, Lifting Data — English	1
2	570614	LUG, Lifting — Rear	2
3	1511709	DECAL, Lift Symbol	2
4	1511709	DECAL, Lift Symbol	1
5	570614	LUG, Lifting — Front	1

WHEN ORDERING PARTS, ALWAYS STATE MODEL AND SERIAL NO. OF MACHINE

https://truckmanualshub.com/

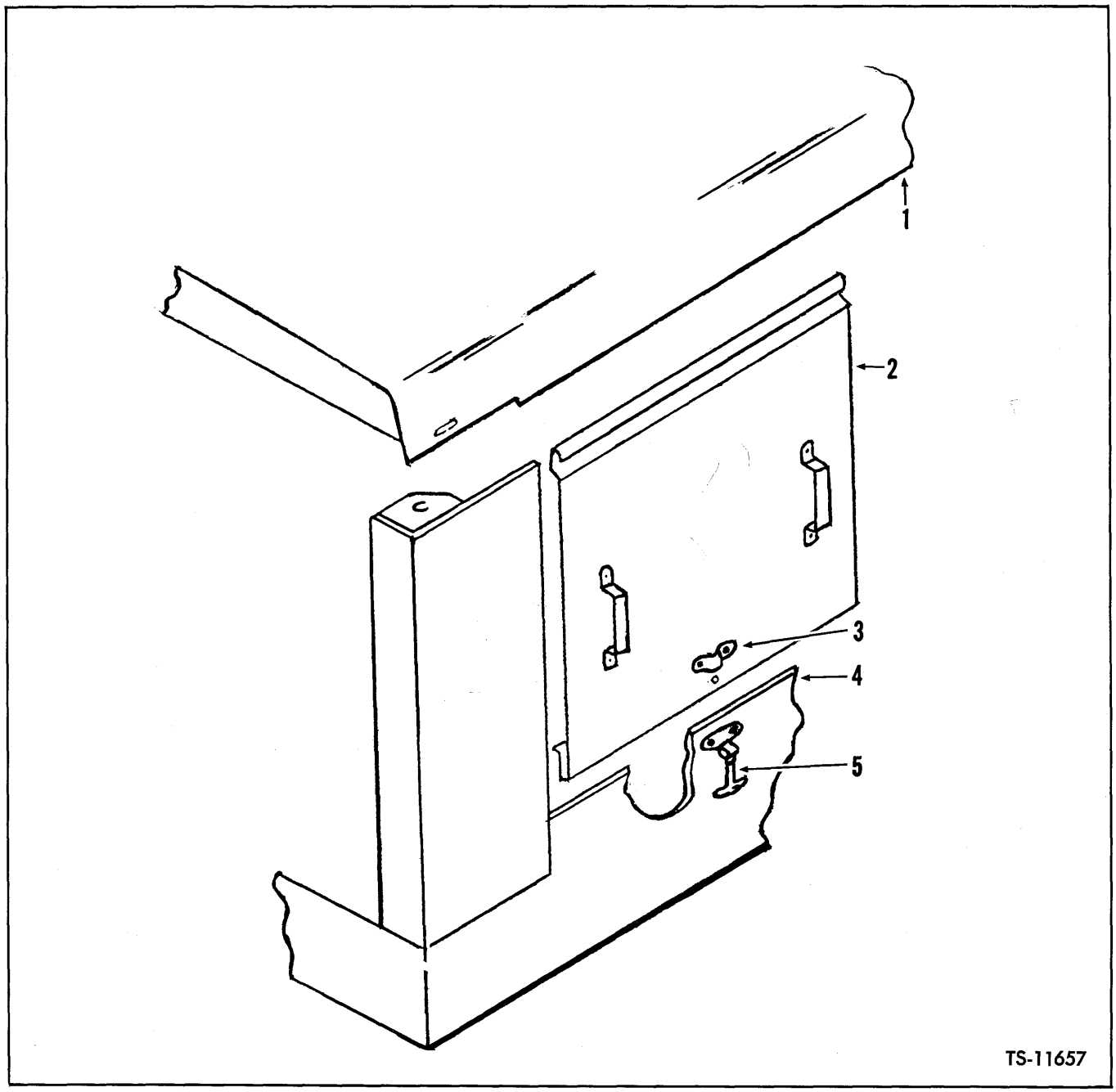

SIDE PANELS

Item No.	Part No.	Description	No. Req'd.
1	———	HOOD — See Index	—
2	1514602	SIDE PANEL (Inc. 3, 3A)	6
3	1545623	KEEPER, Latch	6
3A	1H-306	†RIVET, Keeper	12
4	———	FRAME — See Index	—
5	1545622	LATCH ASSY	6

†Not Illustrated

WHEN ORDERING PARTS, ALWAYS STATE MODEL AND SERIAL NO. OF MACHINE

https://truckmanualshub.com/

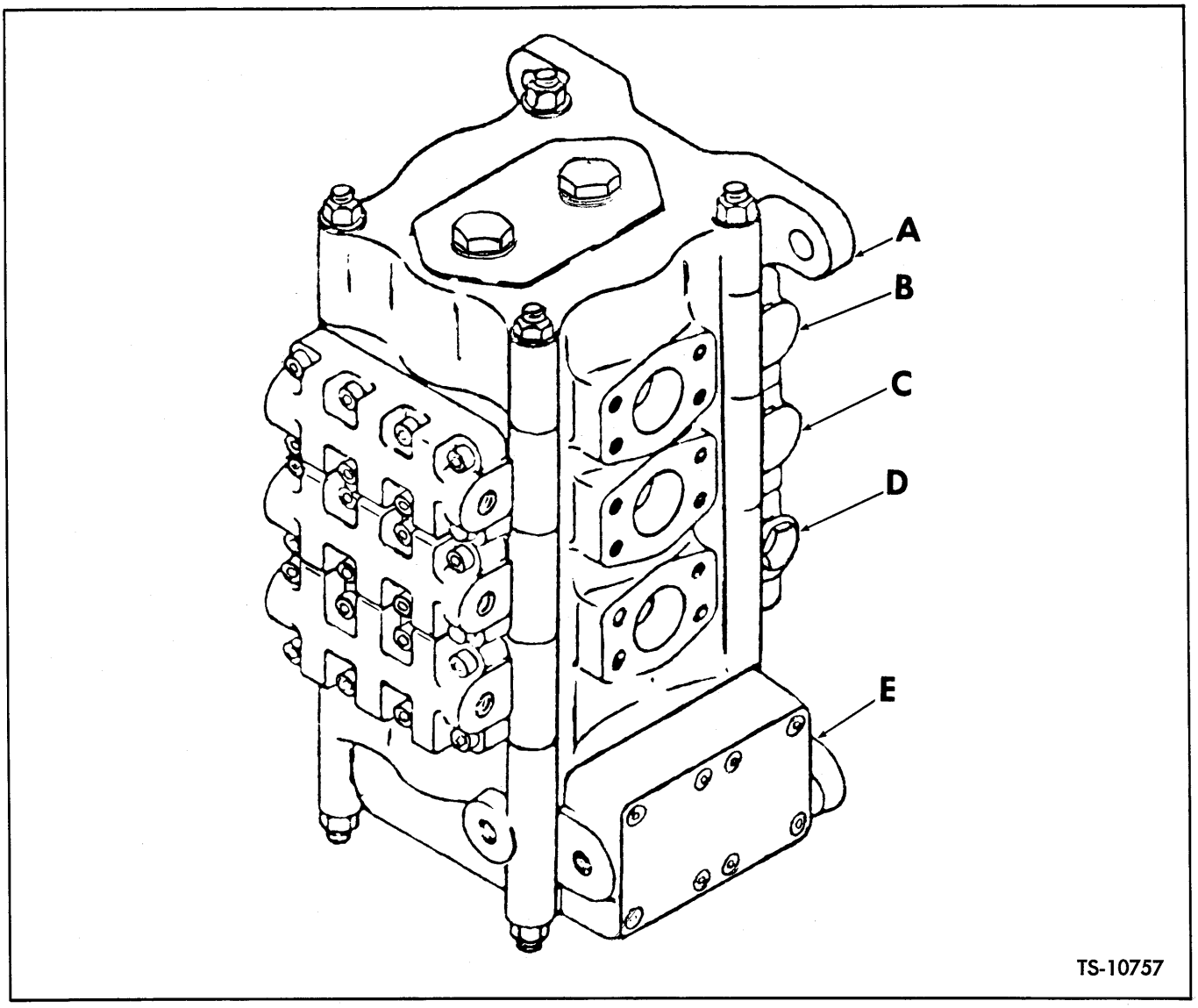

VALVE ASSEMBLY, MAIN, THREE SPOOL

No. Item	No. Part	Description	No. Req'd.
A	1513189	*CONTROL VALVE ASSY	1
		A §COVER SECTION	
		B OPTIONAL SECTION — See Page Z15	
		C BOOM SECTION — See Page Z16	
		D BUCKET SECTION — See Page Z17	
		E CONTROL SECTION — See Page Z18	
		F †RELIEF VALVE ASSY — See Page Z19	

*While this valve assembly consists of separate sections, for use in manufacturing, held together with through bolts with nuts on each end, do NOT remove the through bolts or separate the sections of the valve. Also the torque on the through bolts is not to be disturbed. Disregarding these instructions can and will cause difficulties necessitating replacement of complete valve assembly. Control Valve Assy under above designation includes all items on pages Z15 thru Z19.

For purpose of identification, illustration above indicates by alphabetical designation the individual section group location in control valve. Code to alphabetical designation also appears in heading of each section covered in parts listing herein.

†Not Illustrated

§Not Sold Separately

WHEN ORDERING PARTS, ALWAYS STATE MODEL AND SERIAL NO. OF MACHINE

https://truckmanualshub.com/

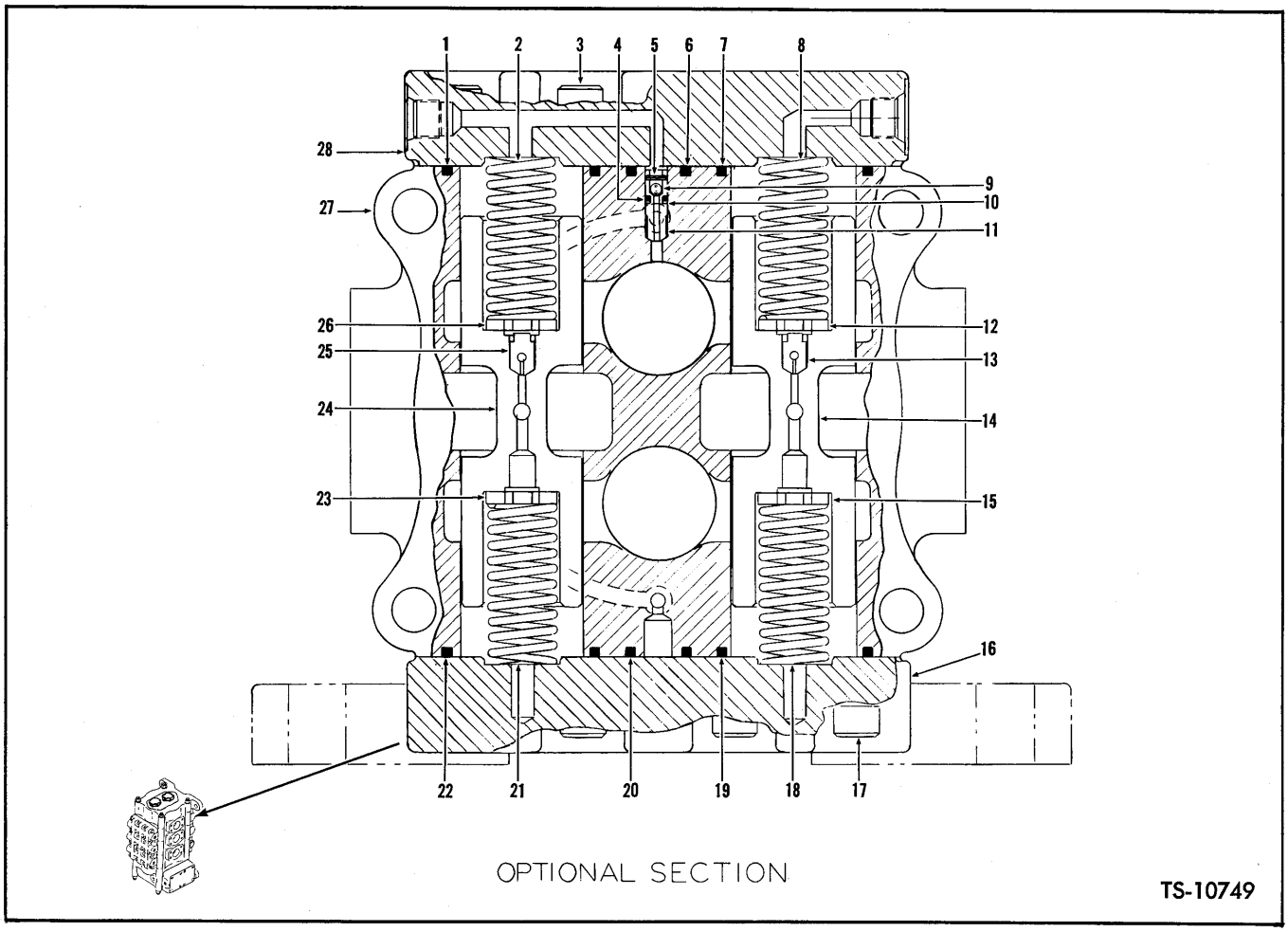

VALVE ASSEMBLY — MAIN — SECTION B — OPTIONAL

Item No.	Part No.	Description	No. Req'd.
1	25K-40200	O-RING, Cover to Housing	1
2	948818	SPRING, Plunger	1
3	11G-828	BOLT, Cover to Housing	8
4	948057	O-RING, Poppet	1
5	———	§PIN, Poppet — See "11"	—
6	25K-30022	O-RING, Cover to Housing	1
7	25K-40200	O-RING, Cover to Housing	1
8	948818	SPRING, Plunger	1
9	———	§BALL, Poppet — See "11"	—
10	948794	RING, Back-Up	1
11	945194	POPPET ASSY (Inc. 4, 5, 9, 10)	1
12	948846	WASHER	1
13	948060	CHECK, White (.063 Orifice Size 52 Drill)	1
14	———	§PLUNGER — See "A" Page Z14	—
15	948846	WASHER	1
16	948861	COVER, Plunger	1
17	11G-828	BOLT, Cover to Housing	8
18	948818	SPRING, Plunger	1
19	25K-40200	O-RING, Cover to Housing	1
20	25K-30022	O-RING, Cover to Housing	1
21	948818	SPRING, Plunger	1
22	25K-40200	O-RING, Cover to Housing	1
23	948846	WASHER	1
24	———	§PLUNGER — See "A" Page Z14	—
25	948060	CHECK — White (.063 Orifice Size 52 Drill)	1
26	948846	WASHER	1
27	———	§HOUSING — See "A" Page Z14	—
28	948817	COVER, Plunger	1
29	948847	†PLUG, Pipe	2
30	91F-3	†O-RING, Plug	2

†Not Illustrated
§Not Sold Separately

WHEN ORDERING PARTS, ALWAYS STATE MODEL AND SERIAL NO. OF MACHINE

https://truckmanualshub.com/

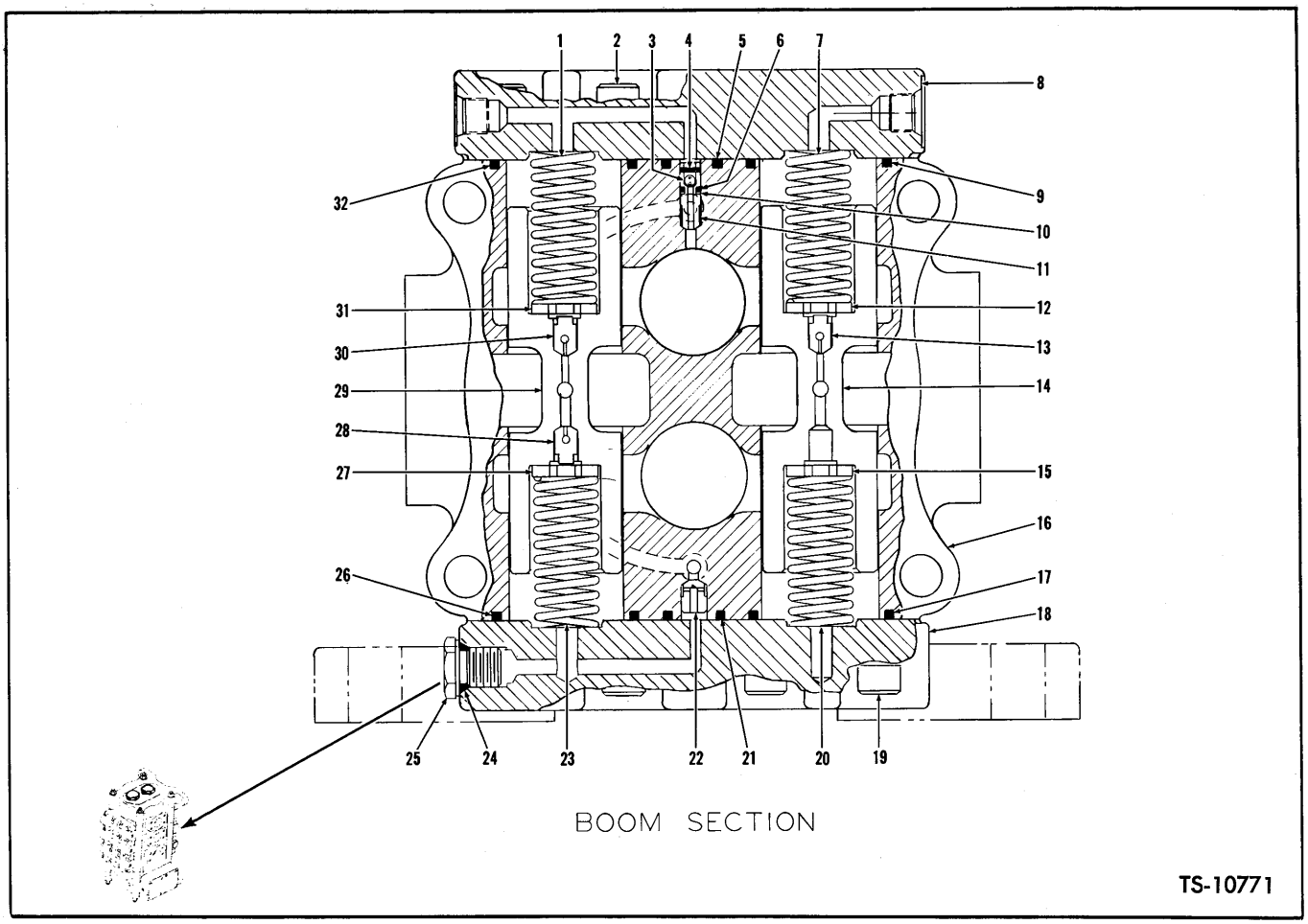

VALVE ASSEMBLY — MAIN — SECTION C — BOOM

Item No.	Part No.	Description	No. Req'd.
1	948818	SPRING, Plunger	1
2	11G-828	BOLT, Cover to Housing	8
3	———	§BALL, Poppet — See 11	—
4	———	§PIN, Poppet — See 11	—
5	25K-30022	O-RING, Cover to Housing	1
6	948057	O-RING, Poppet	1
7	948818	SPRING, Plunger	1
8	948817	COVER, Plunger	1
9	25K-40200	O-RING, Cover to Housing	1
10	948794	RING, Back-Up	1
11	945194	POPPET ASSY (Inc. 3, 4, 6, 10)	1
12	948846	WASHER	1
13	948789	CHECK, Red (.110 Orifice Size 35 Drill)	1
14	———	§PLUNGER — See "A" Page Z14	—
15	948846	WASHER	1
16	———	§HOUSING — See "A" Page Z14	—
17	25K-40200	O-RING, Cover to Housing	1
18	948816	COVER, Plunger	1
19	11G-828	BOLT, Cover to Housing	8
20	948818	SPRING, Plunger	1
21	25K-30022	O-RING, Cover to Housing	1
22	948051	CHECK	1
23	948818	SPRING, Plunger	1
24	91F-6	O-RING, Plug	1
25	948058	PLUG, Pipe	1
26	25K-40200	O-RING, Cover to Housing	1
27	948846	WASHER	1
28	948789	CHECK, Red (.110 Orifice Size 35 Drill)	1
29	———	§PLUNGER — See "A" Page Z14	—
30	948060	CHECK, White (.063 Orifice Size 52 Drill)	1
31	948846	WASHER	1
32	25K-40200	O-RING, Cover to Housing	1

§Not Sold Separately

WHEN ORDERING PARTS, ALWAYS STATE MODEL AND SERIAL NO. OF MACHINE

https://truckmanualshub.com/

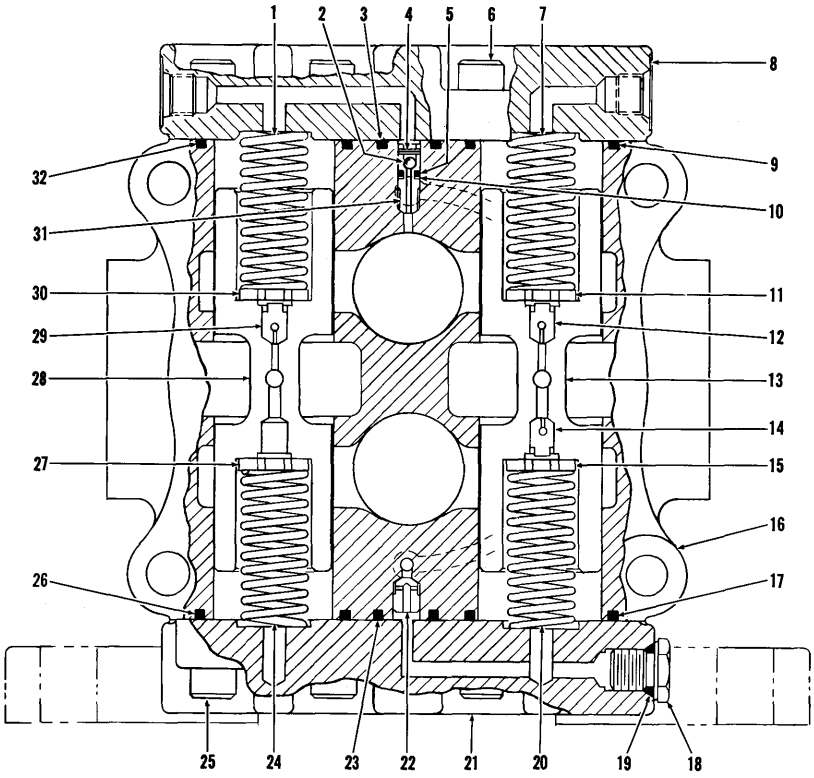

TS-10772

VALVE ASSEMBLY — MAIN — SECTION D — BUCKET

Item No.	Part No.	Description	No. Req'd.
1	948818	SPRING, Plunger	1
2	———	§BALL, Poppet — See 31	—
3	25K-30022	O-RING, Cover to Housing	1
4	———	§PIN, Poppet — See 31	—
5	948057	O-RING, Poppet	1
6	11G-828	BOLT, Cover to Housing	8
7	948818	SPRING, Plunger	1
8	948817	COVER, Plunger	1
9	25K-40200	O-RING, Cover to Housing	1
10	948794	RING, Back-Up	1
11	948846	WASHER	1
12	948060	CHECK, White (.063 Orifice — Size 52 Drill)	1
13	———	§PLUNGER — See "A" Page Z14	—
14	948054	CHECK, Green (.093 Orifice — Size 42 Drill)	1
15	948846	WASHER	1
16	———	§HOUSING — See "A" Page Z14	—
17	25K-40200	O-RING, Cover to Housing	1
18	948058	PLUG, Pipe	1
19	91F-6	O-RING, Plug	1
20	948818	SPRING, Plunger	1
21	948816	COVER, Plunger	1
22	948051	CHECK	1
23	25K-30022	O-RING, Cover to Housing	1
24	948818	SPRING, Plunger	1
25	11G-828	BOLT, Cover to Housing	8
26	25K-40200	O-RING, Cover to Housing	1
27	948846	WASHER	1
28	———	§PLUNGER — See "A" Page Z14	—
29	948060	CHECK, White (.063 Orifice — Size 52 Drill)	1
30	948846	WASHER	1
31	945194	POPPET ASSY (Inc. 2, 4, 5, 10)	1
32	25K-40200	O-RING, Cover to Housing	1

§Not Sold Separately

WHEN ORDERING PARTS, ALWAYS STATE MODEL AND SERIAL NO. OF MACHINE

https://truckmanualshub.com/

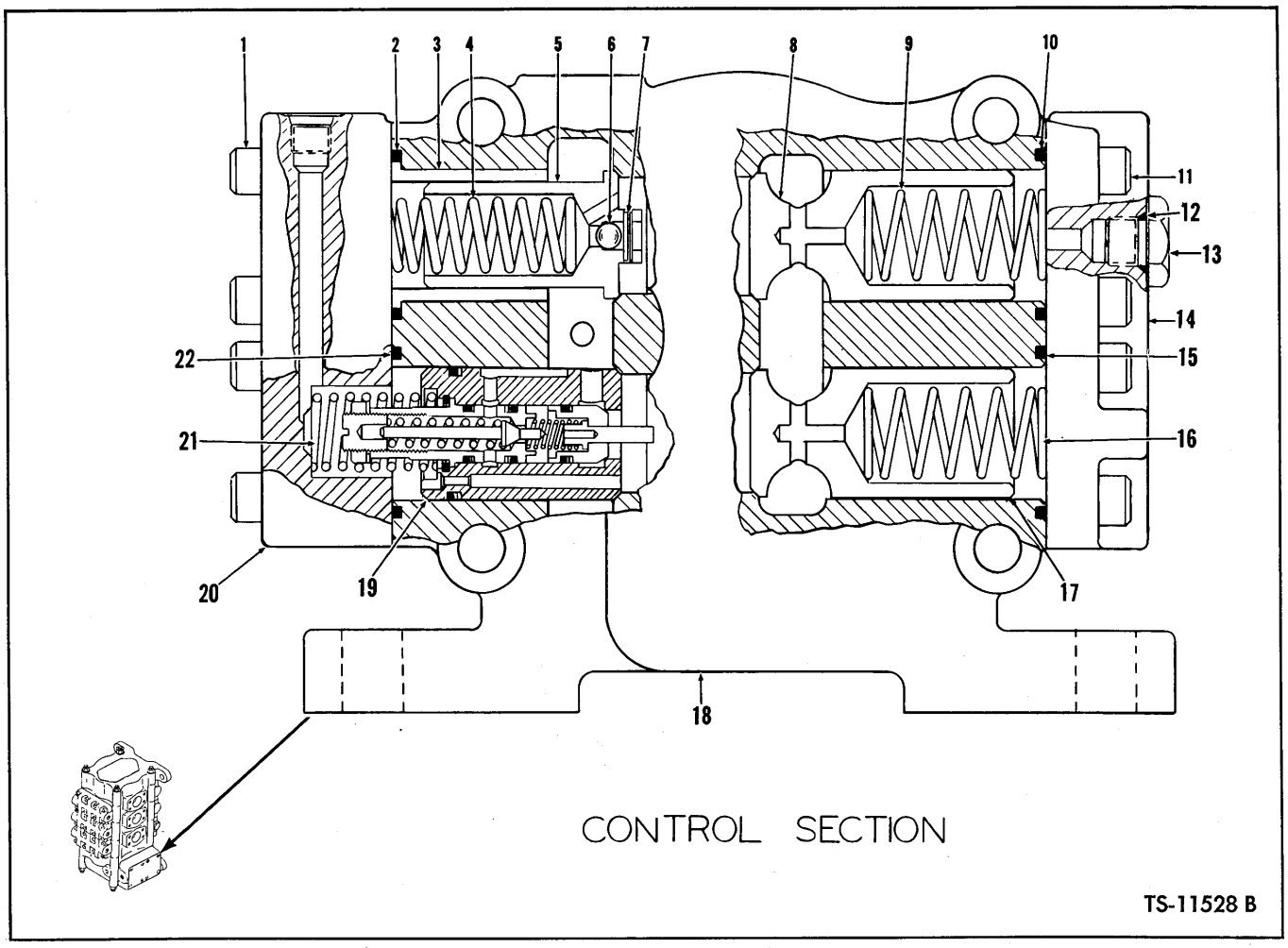

VALVE ASSEMBLY — MAIN — SECTION E — CONTROL

Item No.	Part No.	Description	Req'd.
1	11G-828	BOLT, Cover to Housing	8
2	25K-40200	O-RING, Cover to Housing	1
3	———	§SLEEVE, Poppet — See 5	—
4	948814	SPRING, Poppet	1
5	948859	POPPET ASSY (Inc. 3, 6, 7)	1
6	———	§BALL, Poppet — See 5	—
7	———	§PIN, Poppet — See 5	—
8	948821	POPPET	1
9	948823	SPRING, Poppet	1
10	25K-40200	O-RING, Cover to Housing	1
11	11G-828	BOLT, Cover to Housing	8
12	91F-8	O-RING, Plug	1
13	949309	PLUG	1
14	949298	COVER, Plunger	1
15	25K-40200	O-RING, Cover to Housing	1
16	948823	SPRING, Poppet	1
17	948821	POPPET	1
18	———	§HOUSING — See "A" Page Z14	—
19	———	RELIEF VALVE ASSY — See Page Z19	—
20	948820	COVER, Plunger	1
21	948815	SPRING	1
22	25K-40200	O-RING, Cover to Housing	1

§Not Sold Separately

WHEN ORDERING PARTS, ALWAYS STATE MODEL AND SERIAL NO. OF MACHINE

https://truckmanualshub.com/

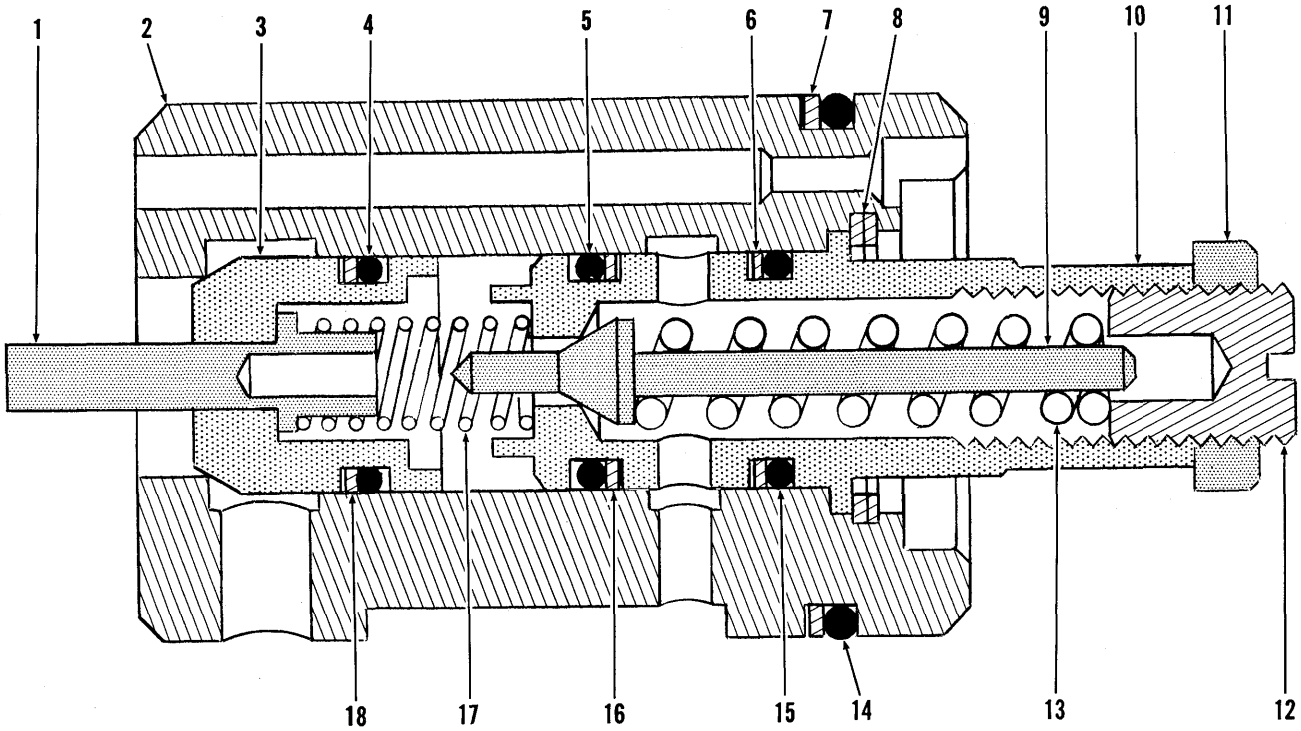

TS-10636

RELIEF VALVE ASSEMBLY

Item No.	Part No.	Description	No. Req'd.
A	948854	RELIEF VALVE ASSY (Inc. 1 thru 18)	1
1	948824	PISTON	1
2	———	§POPPET — See Item A	—
3	———	§POPPET — See Item A	—
4	948063	O-RING, Poppet	1
5	948063	O-RING, Plug	1
6	948849	RING, Plug Back-Up	1
7	948852	RING, Poppet Back-Up	1
8	948850	RING, Snap	2
9	———	§POPPET — See Item A	—
10	———	§PLUG — See Item A	—
11	8D-06	NUT, Jam	1
12	948848	SCREW, Adjusting	1
13	948825	SPRING, Poppet	1
14	948851	O-RING, Poppet	1
15	948063	O-RING, Plug	1
16	948849	RING, Plug Back-Up	1
17	948129	SPRING, Piston	1
18	948849	RING, Poppet Back-Up	1

§Not Sold Separately

WHEN ORDERING PARTS, ALWAYS STATE MODEL AND SERIAL NO. OF MACHINE

https://truckmanualshub.com/

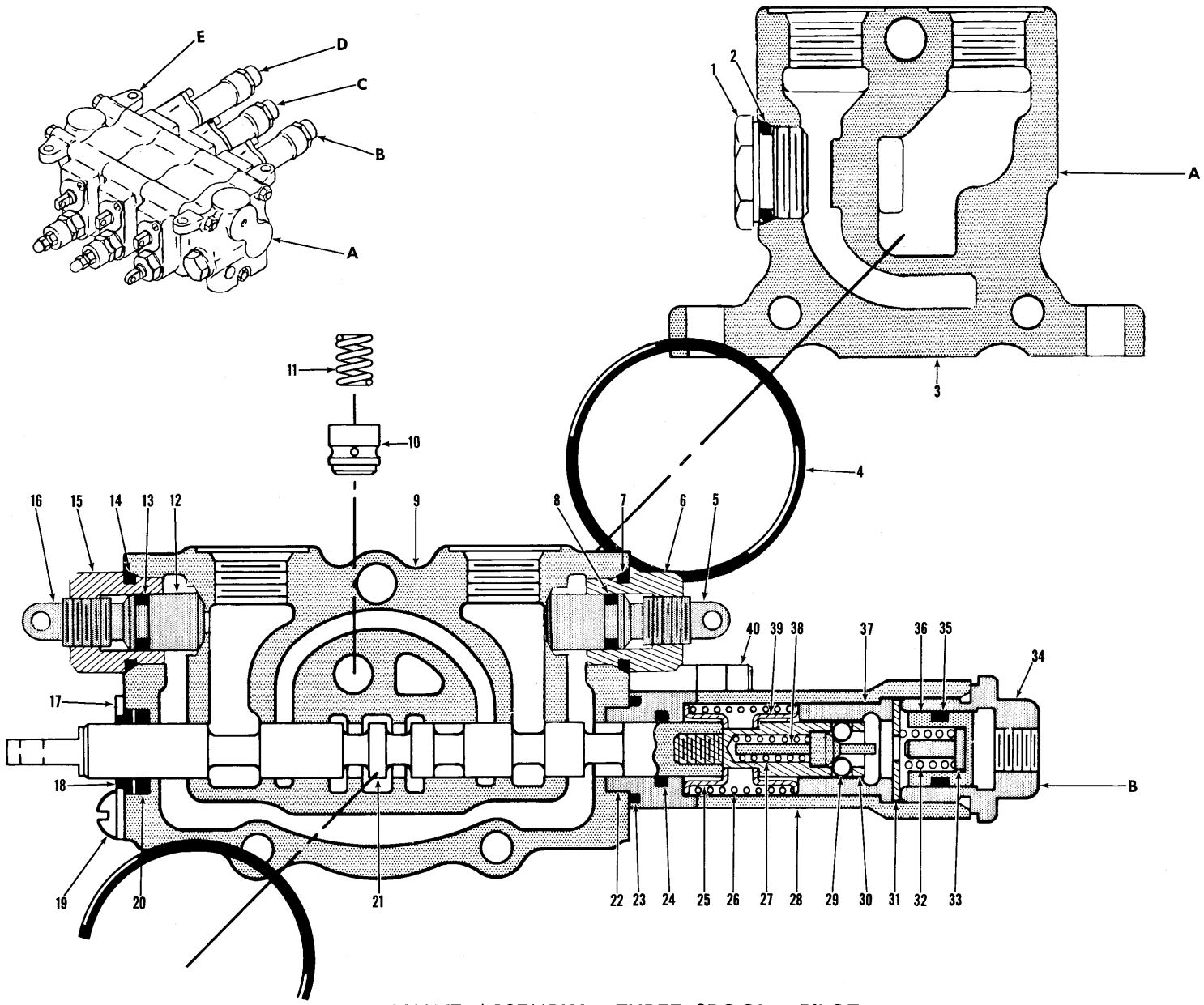

VALVE ASSEMBLY — THREE SPOOL — PILOT
INLET, OUTLET & OPTIONAL SECTION — A & B

TS-10823

https://truckmanualshub.com/

VALVE ASSEMBLY — THREE SPOOL — PILOT INLET, OUTLET & OPTIONAL SECTION — A & B

Item No.	Part No.	Description	No. Req'd.
A	1549423	CONTROL VALVE ASSY (Inc. 1 thru 150)	1
B	948979	PLUNGER SECTION ASSY (Inc. 9, 17 thru 41, 53)	1
1	948810	PLUG, Inlet Section	1
2	91F-7	O-RING, Plug	1
3	948805	INLET & OUTLET SECTION ASSY (Inc. 1, 2, 4)	1
4	25K-40108	O-RING, Valve Section to Valve Section	1
5	———	§POPPET — See Item 6	—
6	945193	VALVE, Shut-Off (Inc. 5, 7, 8)	1
7	91F-7	O-RING, Valve	1
8	———	§O-RING, Poppet — See Item 6	—
9	———	§HOUSING, Plunger Section — See "A" or "B"	—
10	948015	POPPET	1
11	948022	SPRING, Poppet	1
12	———	§POPPET — See 15	—
13	———	§O-RING, Poppet	—
14	91F-7	O-RING, Valve	1
15	945193	VALVE, Shut-Off (Inc. 12, 13, 14, 16)	1
16	———	§POPPET — See 15	—
17	948016	PLATE, Wiper & Seal Retainer	1
18	948021	WIPER, Plunger Oil	1
19	71G-406	SCREW, Plate to Housing	2
20	25K-30018	O-RING, Plunger Oil	1
21	———	§PLUNGER, Operating — See "A" or "B"	—
22	948982	SPACER, Cover to Housing	1
23	25K-30024	O-RING, Spacer to Housing	1
24	25K-30018	O-RING, Plunger Oil	1
25	948017	SEAT, Spring	1
26	948018	SPRING, Plunger Return	1
27	948020	SPRING, Detent	1
28	948980	CAP, Plunger	1
29	877420	BALL, Detent	4
30	948019	SEAT, Detent	1
31	948030	SPACER, Detent	1
32	948026	SPRING, Piston	1
33	948025	PIN, Detent	1
34	948028	PLUG, Detent	1
35	25K-30018	O-RING, Piston	1
36	948024	PISTON, Detent	1
37	948023	SLEEVE, Detent	1
38	948029	CAM, Detent	1
39	948017	SEAT, Spring	1
40	948032	BOLT, Cap to Housing	2

§Not Sold Separately

NOTES

WHEN ORDERING PARTS, ALWAYS STATE MODEL AND SERIAL NO. OF MACHINE

https://truckmanualshub.com/

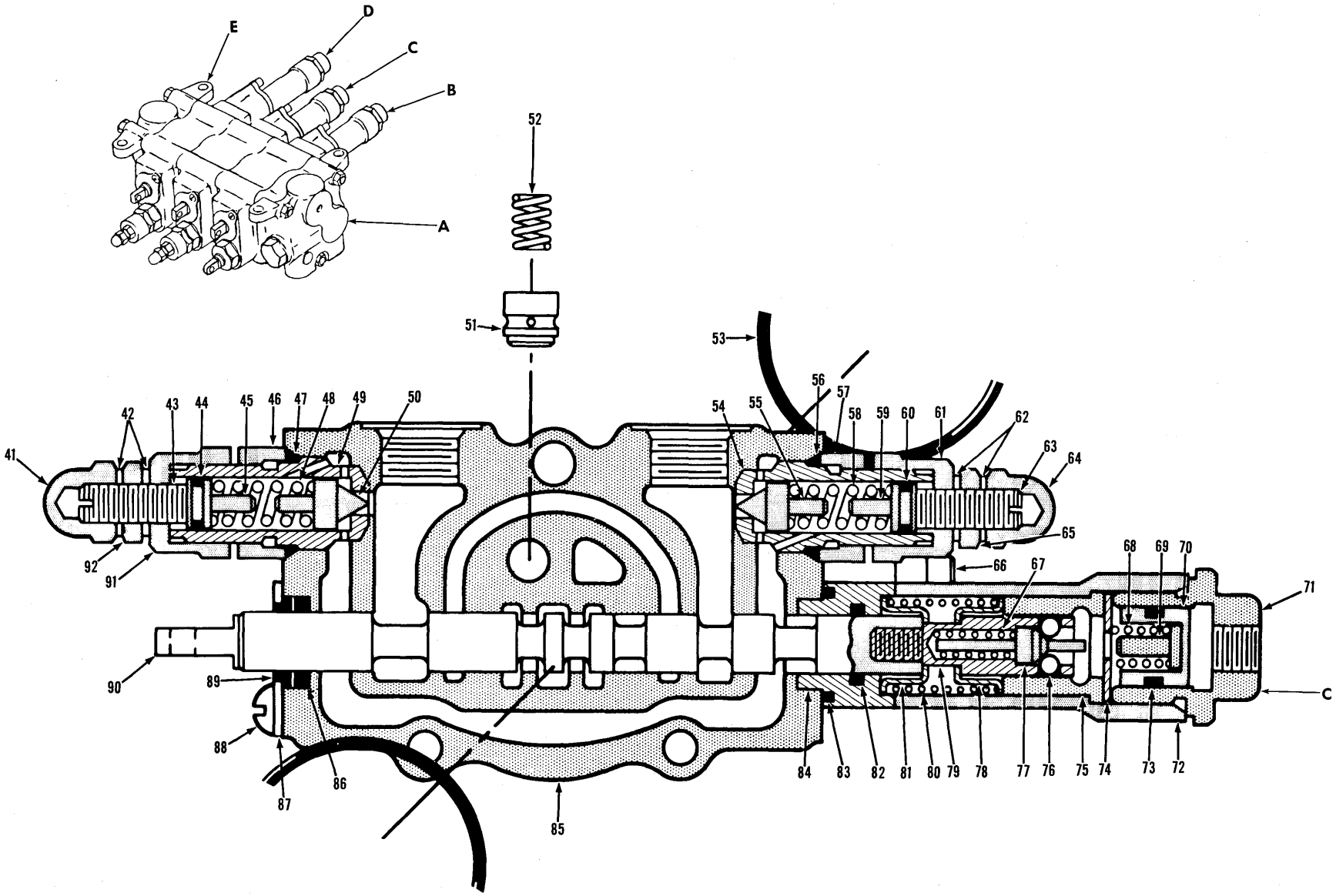

VALVE ASSEMBLY — THREE SPOOL — PILOT
BUCKET SECTION — C

TS-10783

https://truckmanualshub.com/

VALVE ASSEMBLY — THREE SPOOL — PILOT (Continued)
BUCKET SECTION — C

Item No.	Part No.	Description	No. Req'd.
A	948979	PLUNGER SECTION ASSY (Inc. 51, 52, 66 thru 90, 105)	1
B	1545915	RELIEF VALVE ASSY (Inc. 41 thru 50, 91, 92)	1
C	1545916	RELIEF VALVE ASSY (Inc. 54, 55 thru 65)	1
41	———	§NUT, Acorn — See "B"	—
42	———	§WASHER, Jam — See "B"	—
43	———	§SCREW, Adjusting — See "B"	—
44	———	§O-RING, Guide — See "B"	—
45	———	§GUIDE, Spring — See "B"	—
46	———	§CAP, Relief Valve — See "B"	—
47	91F-7	O-RING, Relief Valve	1
48	———	§SPRING, Poppet — See "B"	—
49	———	§SEAT, Poppet — See "B"	—
50	———	§POPPET, Relief Valve — See "B"	—
51	948015	POPPET	1
52	948022	SPRING, Poppet	1
53	25K-40108	O-RING, Valve Section to Valve Section	1
54	———	§SEAT, Poppet — See "C"	—
55	———	§POPPET, Relief Valve — See "C"	—
56	91F-7	O-RING, Relief Valve	1
57	———	§CAP, Relief Valve — See "C"	—
58	———	§SPRING, Poppet — See "C"	—
59	———	§GUIDE, Spring — See "C"	—
60	———	§O-RING, Spring Guide — See "C"	—
61	———	§CAP, Relief Valve — See "C"	—
62	———	§WASHER, Jam — See "C"	—
63	———	§SCREW, Adjusting — See "C"	—
64	———	§NUT, Acorn — See "C"	—
65	———	§NUT, Jam — See "C"	—
66	948032	BOLT, Cap to Housing	2
67	948020	SPRING, Detent	1
68	948026	SPRING, Piston	1
69	948025	PIN, Detent	1
70	948024	PISTON, Detent	1
71	948028	PLUG, Detent	1
72	948980	CAP, Plunger	1
73	25K-30018	O-RING, Piston	1
74	948030	SPACER, Detent	1
75	948023	SLEEVE, Detent	1
76	877420	BALL, Detent	4
77	948029	CAM, Detent	1
78	948017	SEAT, Spring	1
79	948019	SEAT, Detent	1
80	948018	SPRING, Plunger Return	1
81	948017	SEAT, Spring	1
82	25K-30018	O-RING, Plunger Oil	1
83	25K-30024	O-RING, Spacer to Housing	1
84	948982	SPACER, Cover	1
85	———	§HOUSING, Plunger Section — See "A"	—
86	25K-30018	O-RING, Plunger	1
87	948016	PLATE, Wiper and Seal Retainer	1
88	71G-406	SCREW, Plate to Housing	2
89	948021	WIPER, Plunger Oil	1
90	———	§PLUNGER, Operating — See "A"	—
91	———	§CAP, Relief Valve — See "B"	—
92	———	§NUT, Jam — See "B"	—

§Not Sold Separately

WHEN ORDERING PARTS, ALWAYS STATE MODEL AND SERIAL NO. OF MACHINE

https://truckmanualshub.com/

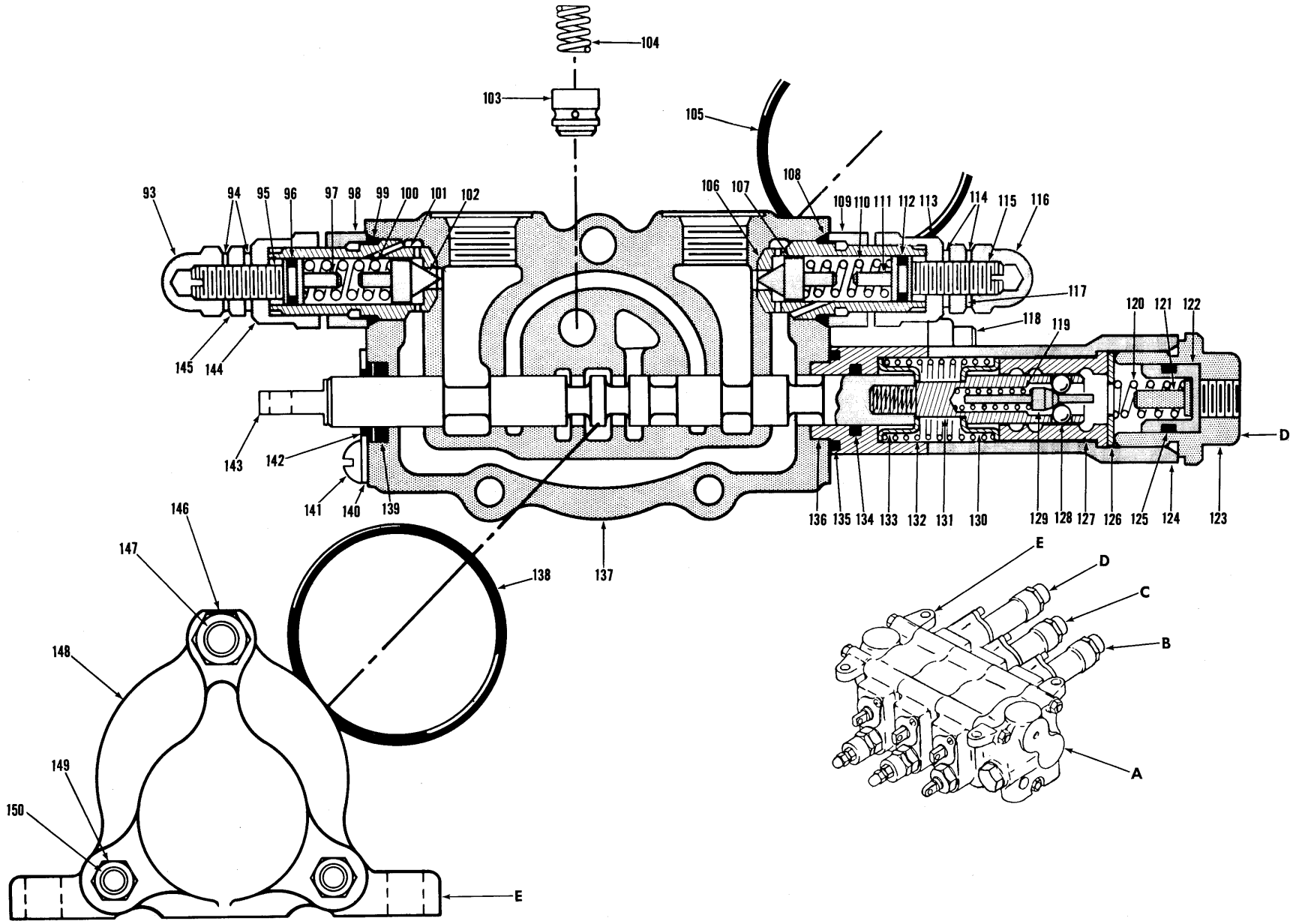

VALVE ASSEMBLY — THREE SPOOL — PILOT
BOOM & COVER END SECTION — D & E

TS-10784

https://truckmanualshub.com/

VALVE ASSEMBLY — THREE SPOOL — PILOT (Continued)
BOOM & COVER END SECTION — D & E

Item No.	Part No.	Description	No. Req'd.
A	948903	PLUNGER SECTION ASSY (Inc. 103, 104, 118 thru 143)	1
B	1545915	RELIEF VALVE ASSY (Inc. 93 thru 102, 144, 145)	1
C	1545916	RELIEF VALVE ASSY (Inc. 106, 107, 108 thru 117)	1
93	———	§NUT, Acorn — See "B"	—
94	———	§WASHER, Jam Nut — See "B"	—
95	———	§SCREW, Adjusting — See "B"	—
96	———	§O-RING, Guide — See "B"	—
97	———	§GUIDE, Spring — See "B"	—
98	———	§CAP, Relief Valve — See "B"	—
99	91F-7	O-RING, Relief Valve	1
100	———	§SPRING, Poppet — See "B"	—
101	———	§SEAT, Poppet — See "B"	—
102	———	§POPPET, Relief Valve — See "B"	—
103	948015	POPPET	1
104	948022	SPRING, Poppet	1
105	25K-40108	O-RING, Valve Section to Valve Section	1
106	———	§SEAT, Poppet — See "C"	—
107	———	§POPPET, Relief Valve — See "C"	—
108	91F-7	O-RING, Relief Valve	1
109	———	§CAP, Relief Valve — See "C"	—
110	———	§SPRING, Poppet — See "C"	—
111	———	§GUIDE, Spring — See "C"	—
112	———	§O-RING, Spring Guide — See "C"	—
113	———	§CAP, Relief Valve — See "C"	—
114	———	§WASHER, Jam — See "C"	—
115	———	§SCREW, Adjusting — See "C"	—
116	———	§NUT, Acorn — See "C"	—
117	———	§NUT, Jam — See "C"	—
118	11G-428	BOLT, Cap to Housing	2
119	948020	SPRING, Detent	1
120	948026	SPRING, Piston	1
121	948025	PIN, Detent	1
122	948024	PISTON, Detent	1
123	948028	PLUG, Detent	1
124	948980	CAP, Plunger	1
125	25K-30018	O-RING, Piston	1
126	948030	SPACER, Detent	1
127	948034	SLEEVE, Detent	1
128	877420	BALL, Detent	4
129	948029	CAM, Detent	1
130	948017	SEAT, Spring	1
131	948033	PIN, Detent	1
132	948018	SPRING, Plunger Return	1
133	948017	SEAT, Spring	1
134	25K-30018	O-RING, Plunger Oil	1
135	25K-30024	O-RING, Spacer to Housing	1
136	948981	SPACER, Cover	1
137	———	§HOUSING, Plunger Section — See "A"	—
138	25K-40108	O-RING, Valve Section to Valve Section	1
139	25K-30018	O-RING, Plunger Oil	1
140	948016	PLATE, Wiper & Seal Retainer	1
141	71G-406	SCREW, Plate to Housing	2
142	948021	WIPER, Plunger Oil	1
143	———	§PLUNGER, Operating — See "A"	—
144	———	§CAP, Relief Valve — See "B"	—
145	———	§NUT, Jam — See "B"	—
146	62D-06	NUT, Tie Rod	2
147	948188	TIE ROD	1
148	948010	COVER, Valve End	1
149	1D-06	NUT, Tie Rod	4
150	948187	TIE ROD	2

§Not Sold Separately

WHEN ORDERING PARTS, ALWAYS STATE MODEL AND SERIAL NO. OF MACHINE

https://truckmanualshub.com/

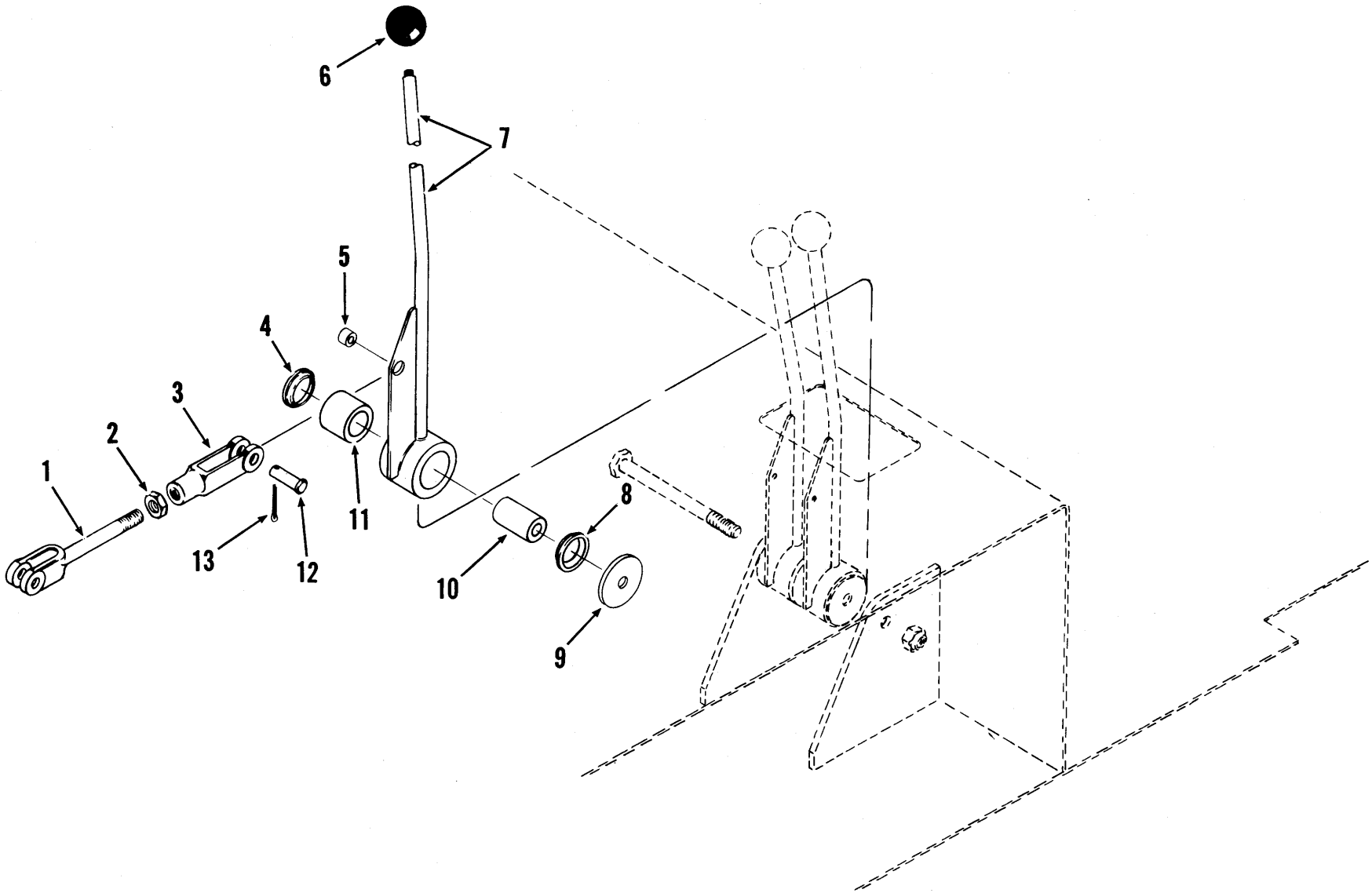

VALVE CONTROLS — THREE SPOOL

TS-10645

https://truckmanualshub.com/

VALVE CONTROLS — THREE SPOOL

Item No.	Part No.	Description	No. Req'd.
1	1537881	ROD ASSY (Inc. 2, 3)	1
2	8D-04	NUT, Clevis Jam	1
3	2J-4200	CLEVIS, Valve Rod	1
4	1522535	WIPER RING	1
5	1542764	BUSHING, Lever	1
6	509772	KNOB	1
7	1542911	LEVER ASSY, Valve (Inc. 11)	1
8	1522535	WIPER RING	1
9	584502	WASHER, Valve Lever	1
10	1503251	SLEEVE, Valve Lever	1
11	675227	BEARING, Valve Lever	1
12	4F-04051	PIN, Clevis	2
13	1F-207	COTTER, Clevis Pin	2

NOTES

WHEN ORDERING PARTS, ALWAYS STATE MODEL AND SERIAL NO. OF MACHINE

https://truckmanualshub.com/

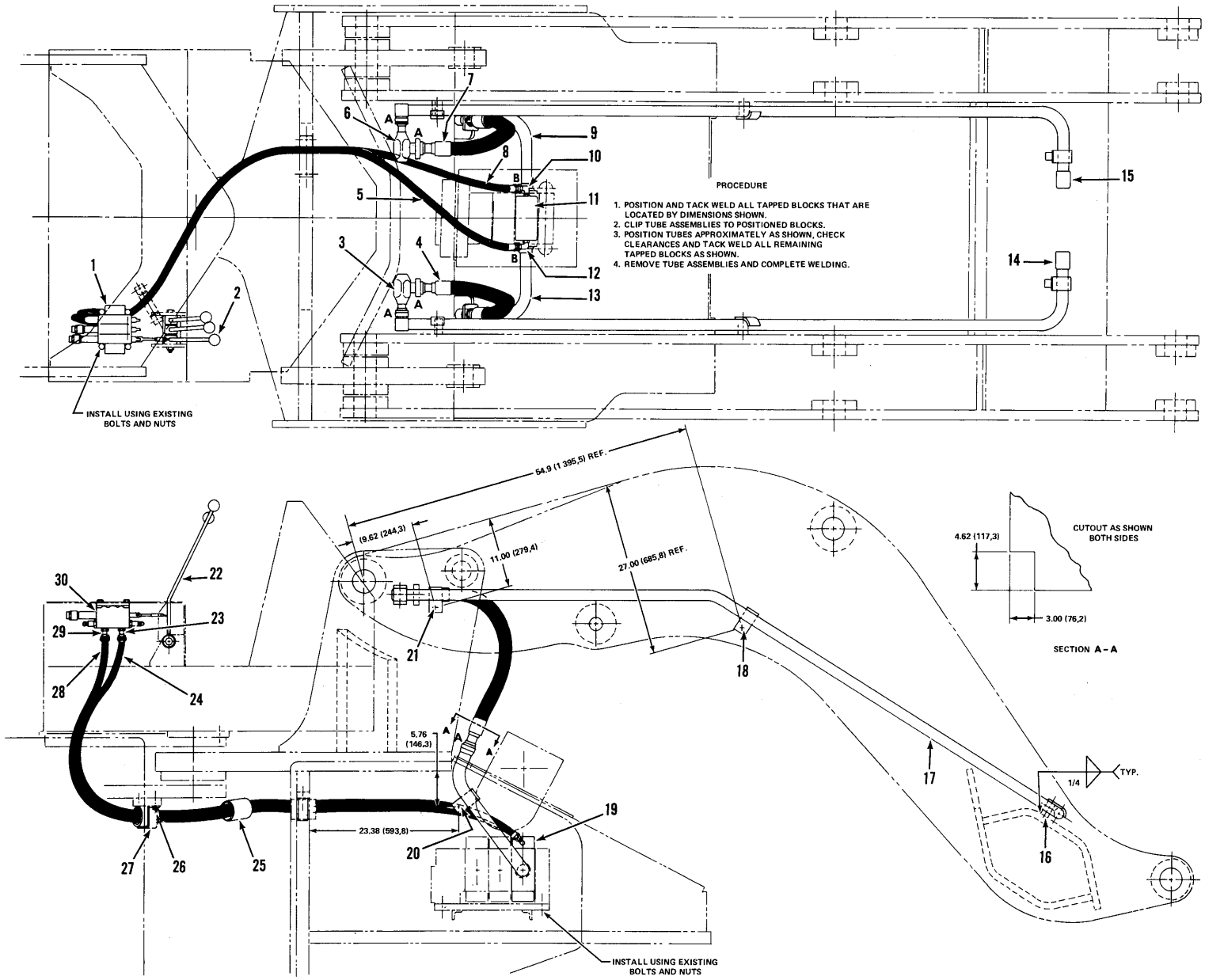

VALVE INSTALLATION & PARTS — THREE SPOOL

TS-10646

https://truckmanualshub.com/

* DICHTSATZ 949500

VALVE INSTALLATION & PARTS — THREE SPOOL

Item No.	Part No.	Description	No. Req'd.
1	———	CONTROL VALVE — Pilot — See Index	—
2	———	THREE SPOOL VALVE CONTROLS — See Index	—
* 3	1509065	SWIVEL JOINT, Boom Tube to Hose	1
3A	———	†FLANGE HALF, Swivel Joint to Tube and to Hose — See Group "A"	—
4	1540139	HOSE, Swivel Joint to Tube	1
4A	———	†FLANGE HALF, Hose to Swivel Joint and Hose to Tube — See Group "A"	—
5	1538812	HOSE, Pilot Valve to Main Valve	1
6	1509065	SWIVEL JOINT, Boom Tube to Hose	1
6A	———	†FLANGE HALF, Swivel Joint to Tube and to Hose — See Group "A"	—
7	1540139	HOSE, Swivel Joint to Tube	1
7A	———	†FLANGE HALF, Hose to Swivel Joint and Hose to Tube — See Group "A"	—
8	1538812	HOSE, Pilot Valve to Main Valve	1
9	1546683	TUBE — L.H. — Hose to Main Valve	1
9A	———	†FLANGE HALF, Tube to Main Valve — See Group "B"	—
10	17K-6	ELBOW, Hose to Main Valve (Inc. 10A)	1
10A	91F-6	†O-RING, Elbow to Valve	1
11	———	CONTROL VALVE — Main — See Index	—
12	17K-6	ELBOW, Hose to Main Valve (Inc. 12A)	1
12A	91F-6	†O-RING, Elbow to Valve	1
13	1546681	TUBE — R.H. — Hose to Main Valve	1
13A	———	†FLANGE HALF, Tube to Main Valve — See Group "B"	—
14	1546688	TUBE — R.H. — Boom	1
15	1546687	TUBE — L.H. — Boom	1
16	1508914	TAPPED BLOCK, Weld to Boom	2
16A	24C-820	†BOLT, Tube Mounting	2
16B	4E-08	†LKWSHR, Tube Mounting	2
16C	619029	†WASHER, Tube Mounting	2
17	———	TUBE — R.H., Boom — See Item 14	—
18	1508914	TAPPED BLOCK, Weld to Boom	2
18A	24C-820	†BOLT, Tube Mounting	2
18B	4E-08	†LKWSHR, Tube Mounting	2
18C	619029	†WASHER, Tube Mounting	2
19	———	CONTROL VALVE — Main — See Item 11	—
20	1538623	RECTANGULAR FLAT	2
20A	24C-824	†BOLT, Tube Mounting	2
20B	4E-08	†LKWSHR, Tube Mounting	2
20C	619029	†WASHER, Tube Mounting	4
20D	18D-08	†NUT, Tube Mounting	2
21	1508914	TAPPED BLOCK, Weld to Boom	2
21A	24C-820	†BOLT, Tube Mounting	2
21B	4E-08	†LKWSHR, Tube Mounting	2
21C	619029	†WASHER, Tube Mounting	2
22	———	THREE SPOOL VALVE CONTROLS — See Item 2	—
23	18K-6	CONNECTOR, Valve to Hose (Inc. 23A)	1
23A	91F-6	†O-RING, Connector to Valve	1
24	———	HOSE, Pilot Valve to Main Valve — See Item 5	—
25	1M-24040	HOSE, Hose Guard	3
26	24C-820	BOLT, Clamp Mounting	4
26A	4E-08	†LKWSHR, Clamp Mounting	4
27	1537987	CLAMP, Hose to Frame	2
28	———	HOSE, Pilot Valve to Main Valve — See Item 8	—
29	18K-6	CONNECTOR, Valve to Hose (Inc. 29A)	1
29A	91F-6	†O-RING, Connector to Valve	1
30	———	CONTROL VALVE — Pilot — See Item 1	—

†Not Illustrated

GROUP	FLANGE HALF	O-RING	BOLT	LKWSHR	SIZE
No. Req'd. Per Connection	2	1	4	4	
A	663094	1306623	23C-724	4E-07	1¼"
B	1511520	1306624	23C-824	4E-08	1½"

WHEN ORDERING PARTS, ALWAYS STATE MODEL AND SERIAL NO. OF MACHINE

https://truckmanualshub.com/

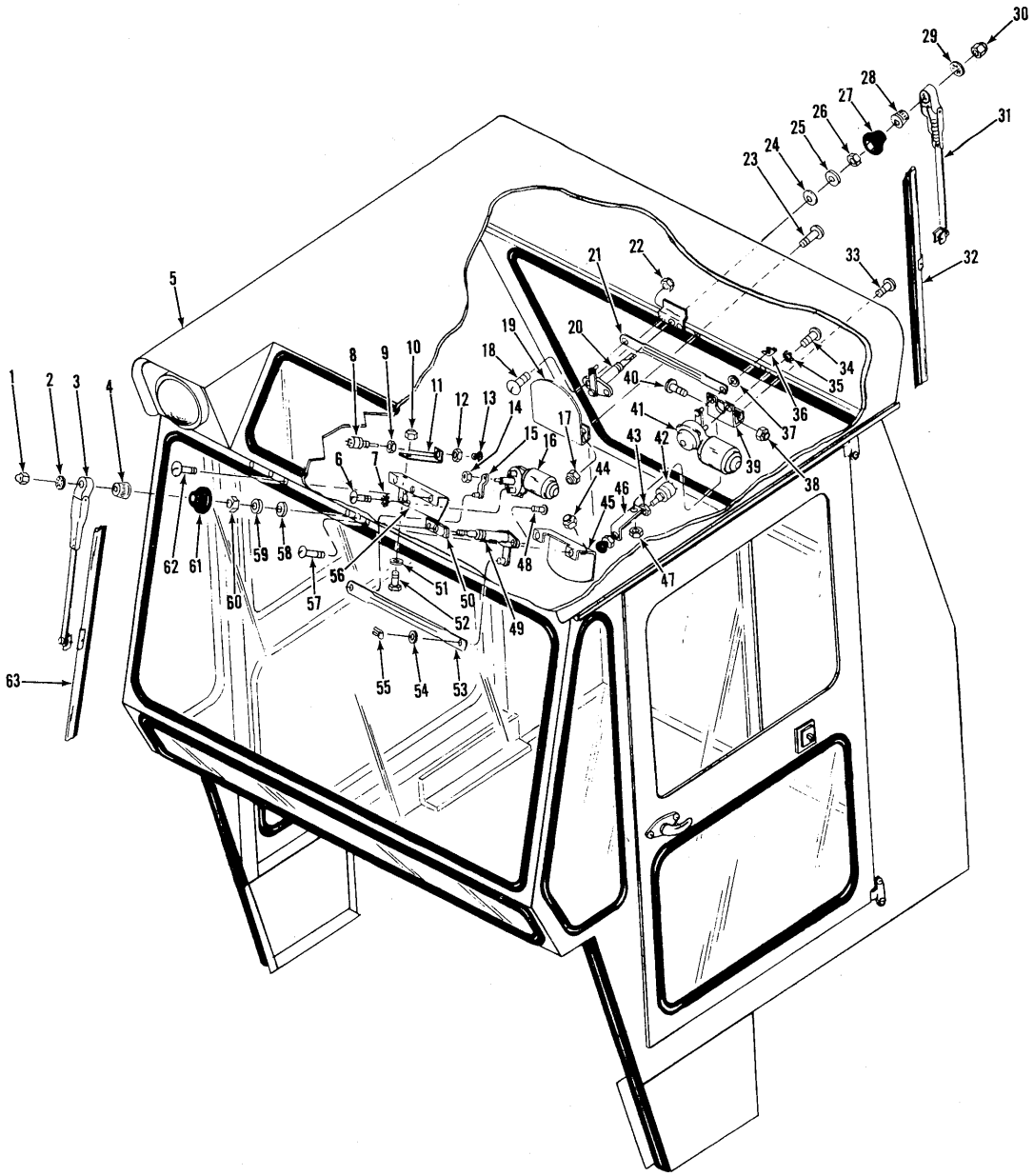

WINDSHIELD WIPER KITS — FRONT & REAR — OPTIONAL

TS-10933

https://truckmanualshub.com/

WINDSHIELD WIPER KITS — FRONT & REAR — OPTIONAL

Item No.	Part No.	Description	No. Req'd.
A	1534343	WINDSHIELD WIPER KIT, Front (Inc. 1 thru 4, 6 thru 16, 44, 45, 48 thru 63	1
B	568970	WINDSHIELD WIPER KIT, Rear (Inc. 17 thru 43, 46, 47)	1
1	522028	NUT, Acorn	1
2	9E-05	LKWSHR, Arm Attaching	1
3	560517	ARM, Wiper	1
4	949184	DRIVER, Splined	1
5	———	CAB — See Index	—
6	992896	SCREW, Motor Mounting (Inc. 7)	3
7	———	§LKWSHR, Screw — See 6	3
8	891308	SWITCH, Wiper (Inc. 9, 12, 13)	1
9	———	§NUT, Switch — See 8	1
10	18D-04	NUT, Bracket to Bracket	2
11	546535	BRACKET, Switch Mounting	1
12	———	§NUT, Switch — See 8	1
13	———	§KNOB, Switch — See 8	1
14	949144	NUT, Lever to Switch	1
15	992891	LEVER, Drive	1
16	1573054	MOTOR, Wiper — Front (Inc. 6, 7, 49)	1
17	18D-04	NUT, Shield Mounting	2
18	949143	SCREW, Shaft Mounting	2
19	1534346	SHIELD, Wiper Shaft	1
20	949185	SHAFT, Wiper (Inc. 24 thru 28, 29, 30)	1
21	574729	LINK, Wiper to Shaft	1
22	50D-10	NUT, Shaft Mounting	2
23	24C-410	BOLT, Shield to Cab	2
24	949180	WASHER, Fiber	1
25	949181	WASHER, Steel	1
26	949182	NUT, Shaft Mounting	1
27	949183	CAP, Nut	1
28	949184	DRIVER, Splined	1
29	9E-05	LKWSHR, Arm to Shaft	1
30	522028	NUT, Acorn	1
31	560517	ARM, Wiper	1
32	568968	BLADE, Wiper	1
33	24C-412	BOLT, Bracket to Cab	2
34	992896	SCREW, Motor Mounting (Inc. 35)	3
35	———	§LKWSHR, Screw — See 34	3
36	890374	CLIP, Link Connecting	2
37	890375	WASHER, Spacing	2
38	18D-04	NUT, Bracket to Cab	2
39	992892	BRACKET, Motor	1
40	24C-412	BOLT, Bracket to Bracket	1
41	1573054	MOTOR, Wiper — Rear (Inc. 20, 34, 35)	1
42	891308	SWITCH, Wiper (Inc. 43)	1
43	———	§NUT, Switch — See 42	1
44	18D-04	NUT, Shield Mounting	1
45	1534346	SHIELD, Shaft	1
46	546535	BRACKET, Switch	1
47	18D-08	NUT, Bracket to Bracket	1
48	949143	SCREW, Shaft Mounting	2
49	949185	SHAFT, Wiper Arm (Inc. 1, 2, 3, 4, 58 thru 61)	1
50	1534345	SPACER, Shaft	1
51	655629	WASHER, Bracket to Bracket	2
52	24C-412	BOLT, Bracket to Bracket	2
53	574729	LINK, Motor to Shaft	1
54	890375	WASHER, Spacing	2
55	890374	CLIP, Link Connecting	2
56	992892	BRACKET, Motor Mounting	1
57	90G-428	BOLT, Shield Mounting	2
58	949180	WASHER, Fiber	1
58A	713674	†SPACER, Shaft	1
59	949181	WASHER, Steel	1
60	949182	NUT, Shaft Mounting	1
61	949183	CAP, Nut	1
62	24C-412	BOLT, Bracket to Cab	3
62A	8E-04	†LKWSHR, Bracket to Cab	3
63	568968	BLADE, Wiper	1

†Not Illustrated
§Not Sold Separately

WHEN ORDERING PARTS, ALWAYS STATE MODEL AND SERIAL NO. OF MACHINE

https://truckmanualshub.com/

https://truckmanualshub.com/

NUMERICAL INDEX

Part No.	Page No.
100838	C7-1, C7A-1
100949	T9-1
103293	R4-1, R5-1
104168	A15-1, A17-1, A19-1, A21-1, A23-1
104412	A3-1, A5-1, A7-1, A9-1, A11-1, A19-1
106762	A3-1, A5-1, A7-1, A9-1, A11-1
107010	A3-1, A5-1, A7-1, A9-1, A11-1
107706	B18-1
107731	A3-1, A5-1, A7-1, A9-1, A11-1
107732	A3-1, A5-1, A7-1, A9-1, A11-1
107735	A3-1, A5-1, A7-1, A9-1, A11-1
107736	A3-1, A5-1, A7-1, A9-1, A11-1
107739	A3-1, A5-1, A7-1, A9-1, A11-1
107892	A15-1, A21-1
107901	A15-1, A17-1, A19-1, A21-1, A23-1
107912	A15-1, A17-1, A23-1
107914	A15-1, A17-1
107958	A15-1
107965	A15-1, A21-1, A23-1
107969	A15-1, A21-1
107971	A15-1, A17-1,A19-1, A21-1, A23-1
107973	A15-1, A17-1, A19-1, A21-1, A23-1
107974	A15-1, A17-1, A19-1, A21-1, A23-1
107975	A15-1, A17-1, A19-1, A21-1, A23-1
107977	A15-1, A17-1, A19-1, A21-1, A23-1
107978	A15-1, A17-1, A19-1, A21-1, A23-1
107989	A24-1
107991	A24-1
107992	A24-1
107993	A24-1
108028	A3-1, A5-1, A7-1, A9-1, A11-1
108031	A3-1, A5-1, A7-1, A9-1, A11-1
108451	A15-1, A17-1, A19-1, A21-1, A23-1
108454	A15-1, A17-1, A21-1, A23-1
108455	A21-1, A23-1
108475	A3-1, A5-1, A7-1, A9-1, A11-1
108476	A3-1, A5-1, A7-1, A9-1, A11-1
108478	A3-1, A5-1, A7-1, A9-1, A11-1
108492	A21-1
109597	B18-1
110206	A3-1, A5-1, A7-1, A9-1
110594	B19-1
110855	B18-1
111368	A15-1, A17-1, A19-1, A21-1, A23-1
111656	A3-1, A5-1, A7-1, A9-1, A11-1
111657	A15-1, A21-1, A23-1
111658	A3-1, A5-1, A7-1, A9-1, A11-1
112210	B18-1
112211	B18-1
112212	B18-1
112213	B18-1
112216	B18-1
112278	A19-1
112695	A3-1, A5-1, A7-1, A9-1, A11-1
113249	B18-1
114304	B18-1
114306	B18-1
114307	B18-1
114434	A3-1, A5-1, A7-1, A9-1, A11-1
116422	A15-1
116426	A15-1
116427	A15-1
116523	A15-1
116923	A3-1, A5-1, A7-1, A9-1, A11-1
116937	A3-1, A5-1, A7-1, A9-1, A11-1
117336	A3-1, A9-1
117485	A24-1
118306	A3-1, A5-1, A7-1, A9-1, A11-1
118831	A3-1, A5-1, A7-1, A9-1, A11-1
119470	A3-1, A5-1, A7-1, A9-1, A11-1
119650	A3-1, A5-1, A7-1, A9-1, A11-1
119742	A5-1, A7-1, A11-1
119743	A3-1, A5-1, A7-1, A9-1, A11-1
120391	A3-1, A5-1, A7-1, A9-1, A11-1
120395	A3-1, A5-1, A7-1, A9-1, A11-1
120534	A3-1, A5-1, A7-1, A9-1, A11-1
120769	A15-1, A21-1
120771	A3-1, A9-1
121203	A3-1, A5-1, A7-1, A9-1, A11-1
121214	A3-1, A5-1, A7-1, A9-1, A11-1
122058	A17-1, A19-1, A23-1
122059	A17-1, A19-1, A23-1
122065	A17-1, A19-1, A23-1
122067	A5-1, A7-1, A9-1, A11-1
122068	A17-1, A19-1, A23-1
122069	A17-1, A19-1, A23-1
122070	A17-1, A19-1, A23-1
122076	A17-1, A19-1, A23-1
122417	A21-1
122493	A17-1
122494	A23-1
122495	A17-1, A19-1
122496	A23-1
122497	A15-1, A17-1, A19-1
122498	A21-1, A23-1
122503	B18-1
122504	B18-1
122505	A24-1
122506	A24-1
122508	A3-1, A5-1, A7-1, A9-1, A11-1
122509	A3-1, A9-1
122510	A3-1, A5-1, A7-1, A9-1, A11-1
122511	A3-1, A5-1, A7-1, A9-1, A11-1
122512	A3-1, A5-1, A7-1, A9-1, A11-1
122513	A3-1, A5-1, A7-1, A9-1, A11-1
122514	A3-1, A5-1, A7-1, A9-1, A11-1
122515	A3-1, A5-1, A7-1, A9-1, A11-1
122516	A3-1, A5-1, A7-1, A9-1, A11-1
122675	A15-1
122676	A15-1
122677	A21-1
122678	A21-1
122947	A3-1, A5-1, A7-1, A9-1, A11-1
122948	A3-1, A5-1, A7-1, A9-1, A11-1
123156	A13-1
123381	A17-1, A19-1, A23-1
123500	A17-1, A19-1, A23-1
123641	A19-1
123642	A19-1
123654	A19-1
123655	A19-1
123656	A19-1
123668	A19-1
123792	A5-1, A7-1, A11-1
123793	A5-1, A7-1, A11-1
123824	A19-1
123833	A17-1
123838	A19-1
123909	A15-1, A17-1
123934	A17-1, A23-1
124111	A19-1, B22-1
124233	A17-1, A19-1, A23-1
138249	Z7-1
139149	Z7-1
191131	A3-1
191132	A9-1
191290	A5-1
191291	A11-1
191582	A7-1
201262	C5A-1,C5-1, T11-1
201398	C5A-1, C5-1
203253	C7A-1, C7-1
204347	C5A-1, C5-1 C7A-1, C7-1
205928	T9-1, T12-1
208261	C5A-1, C5-1
209587	T9-1
209673	C5A-1, C5-1
211323	C7A-1, C7-1
211433	H17-1, M2-1, T2-1
214295	C7-1
214668	C8-1
214925	C7A-1
214941	C7A-1, C7-1
215502	E13-1, H15-1
215757	M2-1
216095	C7A-1, C7-1
217099	T10-1
217128	T7-1, T13-1
217130	T6-1
217133	T6-1
217136	T6-1
217137	T6-1
217138	T6-1
217152	T10-1
217155	T10-1
217156	T7-1, T9-1, T12-1, T13-1
217158	T10-1
217161	T10-1
217164	T10-1
217165	T10-1
217334	T6-1, T10-1
217341	T7-1, T13-1
217342	T13-1
217343	T11-1
217352	T8-1
217358	T11-1
217359	T7-1
217361	T10-1
217389	M2-1
217390	M2-1
217391	M2-1
217398	T8-1
217399	T9-1, T12-1
217410	M2-1
217411	T10-1
217415	T6-1
217416	T6-1
217417	T6-1
217418	T7-1, T13-1
217420	T6-1
217457	T11-1
217471	M2-1
217475	C5A-1, C5-1
217488	T12-1
217489	T9-1
217490	T9-1, T12-1
217500	T9-1, T12-1
217502	T7-1, T13-1
217504	T12-1
217506	T7-1, T9-1, T12-1, T13-1
217507	T7-1, T9-1, T12-1, T13-1
217508	T9-1, T12-1
217509	T10-1
217510	T6-1
217545	T9-1, T12-1
217562	T2-1
217563	T2-1
217572	T3-1
217598	T8-1
217599	T6-1, T10-1
217619	T2-1
217620	T2-1

https://truckmanualshub.com/

Part No.	Page No.
217626	T11-1
217628	T8-1
217629	T8-1
217632	T4-1
217633	T4-1
217635	T4-1
217637	T4-1
217644	T4-1
217645	T4-1
217647	T4-1
217648	T4-1
217649	T4-1
217650	T4-1
217651	T4-1
217652	T4-1
217653	T2-1
217654	T4-1
217657	T4-1
217686	T11-1
217687	T11-1
217688	T11-1
217689	T8-1
217690	T8-1
217691	T8-1
217692	T6-1
217698	T3-1
217699	T3-1
217700	T3-1
217701	T3-1
217702	T3-1
217703	T3-1
217704	T3-1
217705	T3-1
217706	T3-1
217707	T3-1
217708	T3-1
217709	T3-1
217710	T3-1
217712	T2-1
217713	T2-1
217927	B11-1, B15-1, V14-1
217928	V14-1
217929	V14-1
218358	T2-1
218376	T2-1
218703	T11-1
218717	C7A-1, C7-1
218721	C7A-1, C7-1
218723	C5-1
218725	C5A-1, C5-1
218728	C5-1
218729	C5-1
218731	C5A-1, C5-1
218733	C5A-1, C5-1
218737	C5A-1, C5-1
218738	C5A-1, C5-1
218739	C5A-1, C5-1
218740	C5A-1, C5-1
218741	C5A-1, C5-1
218742	C5A-1, C5-1
218743	C5A-1, C5-1
218744	C5A-1, C5-1
218753	C7A-1, C7-1
218755	C7-1
218776	C7-1
218777	C7A-1, C7-1
218778	C7A-1
218779	C5A-1, C5-1
218782	C7A-1, C7-1
218791	C5A-1, C5-1
218855	C7A-1, C7-1
218859	C7A-1
218864	C5A-1, C5-1
218870	C7A-1
219413	P7-1, P9-1
219417	C5A-1
219418	C5A-1
220983	T4-1
221478	C7A-1, C7-1
221992	C7A-1, C7-1
222002	C7-1
222008	C7A-1, C7-1
222017	C7-1
222018	C7-1
222019	C7A-1, C7-1
222027	C5A-1, C5-1
222031	C5A-1, C5-1
222035	C5-1
222037	C7-1
222038	C7A-1, C7-1
222041	C8-1, T4-1
222067	T3-1
222179	T9-1
222181	C5A-1, C5-1, T7-1, T11-1, T13-1
222221	C7A-1, C7-1
222223	C7A-1, C7-1
222232	T9-1
222263	C7A-1
222265	C7A-1
222266	C7A-1
223570	C5A-1, C5-1
223740	T7-1, T9-1, T12-1, T13-1
223852	T6-1
223866	C7A-1, C7-1
223879	T8-1
223900	C5A-1, C5-1
223961	C7A-1, C7-1
223982	T6-1, T7-1, T13-1
223988	C7A-1, C7-1
223997	T10-1
224009	C5A-1, C5-1
224036	C7A-1, C7-1
224039	C7A-1, C7-1
224052	A15-1, A17-1, A19-1, A21-1, A23-1
224073	A3-1, A5-1, A7-1, A9-1, A11-1
224315	V14-1
225385	C7A-1, C7-1
225400	T7-1, T13-1
225763	C5A-1, C5-1, T11-1
225766	T6-1
225768	T6-1
225778	C7A-1, C7-1
225781	C7A-1, C7-1
225796	T10-1
225813	T10-1
225840	T9-1, T12-1
225842	T9-1, T12-1
225844	T7-1, T13-1
225850	T11-1
225856	T4-1
226025	C7A-1, C7-1
226026	C5A-1, C5-1, M2-1
226027	C5A-1, C5-1
226595	C7A-1, C7-1
226705	M2-1
226797	M2-1
226798	M2-1
226799	M2-1
226858	A3-1, A5-1, A7-1, A9-1, A11-1
226869	T4-1
226938	T11-1
227064	C5A-1, C5-1
227076	C8-1
227087	C8-1
227154	M2-1
227265	H17-1
227292	C8-1
227495	T10-1
227672	V14-1
227673	V14-1
227883	T8-1
227884	T6-1
228189	H15-1
228499	C8-1
228500	C8-1
228931	V14-1
228987	C7A-1, C7-1
229729	T4-1
229768	C7A-1, C7-1
229769	A19-1
229982	T4-1
230594	C7A-1, C7-1
230606	T2-1
230647	C7A-1, C7-1
231110	T4-1
231592	C5A-1, C5-1
231596	T8-1
232285	T6-1
232394	T10-1
232600	T4-1
232779	T6-1
233657	C7A-1
233658	C5A-1
283248	T2-1
283433	C5-1
300058	T4-1
302602	C7A-1, C7-1
308031	B7-1, B5-1
356609	B11-1, B13-1, B15-1
356617	B17-1, Z11-1
356618	Z11-1
356621	H17-1
356626	H15-1
450246	C7A-1, C7-1
500021	H3-1
507688	T8-1
507815	B11-1, B13-1, B17-1
509445	W2-1
509772	T5-1, V17-1, Z27-1
513113	W2-1
513117	W2-1
513804	C13-1
513842	B17-1
513930	B20-1
513932	V2-1
515069	Z5-1
517847	Z9-1
518259	B20-1
518330	H11-1
518331	S5-1
521439	B11-1, B13-1, B17-1
521441	B11-1, B13-1, B17-1
521874	H5-1, H15-1, Z11-1
522028	Z31-1
523199	R5-1
523247	W2-1
523252	W2-1
523253	W2-1
525293	F6-1, H5-1, T2-1
528651	Z10-1
529359	E5-1, E7-1, E12-1
529605	W2-1
529606	W2-1
531111	W2-1
531112	W2-1
532549	E5-1, E7-1
533417	H13-1
533478	H7-1, H9-1, H13-1
533480	H17-1
534998	C9-1
535649	H3-1, N2-1
536879	A3-1, A5-1, A7-1
537473	R4-1, R5-1
538256	N2-1
538753	R5-1
539106	H13-1, H15-1, H17-1
539164	B11-1, B13-1, B17-1
539195	R2-1, R3-1
539318	R2-1, R3-1
539404	F5-1, R4-1, R5-1
540106	H7-1, H9-1, H11-1, H13-1
540797	E15-1
540882	E5-1, E7-1, Z5-1
540915	B11-1, B13-1, B15-1
543483	E5-1, E7-1
544512	B21-1, B22-1
544998	B23-1
545005	B21-1
545006	B21-1, B22-1
545941	S6-1
546535	Z31-1
546809	H15-1
547237	E3-1
547631	B11-1, B13-1, B15-1
547851	N2-1
547852	N2-1
548088	F3-1
549024	E3-1, E5-1, E7-1
549262	F3-1
549669	B3-1, B5-1, B7-1
550044	S6-1
550301	S2-1
550619	E16-1
550741	E3-1
550742	E3-1
550743	E3-1
551014	E16-1
551016	E16-1
551244	F3-1, H3-1, Z5-1
551251	E14-1
551323	E14-1, H15-1
551480	B24-1
551684	W2-1
551685	W2-1
551778	E16-1
551906	C7A-1, C7-1
552161	P7-1, P9-1
552433	Z11-1
554843	H5-1
556432	P4-1
556489	E3-1
557458	S2-1
557465	Z7-1
558777	S2-1
558779	S2-1
558960	E5-1, E7-1
560517	Z31-1

https://truckmanualshub.com/

Part No.	Page No.
560640	H15-1
560650	Z7-1
560651	Z7-1
561085	F3-1
561088	F3-1
561375	F5-1
562796	V17-1
566629	E12-1
567742	H5-1
567746	H5-1
568477	T5-1
568609	B13-1, B15-1, B17-1
568675	Z5-1
568686	Z7-1
568687	Z7-1
568700	Z7-1
568781	S2-1
568807	H15-1
568810	H17-1
568824	H15-1
568968	Z31-1
568970	Z31-1, R4-1, R5-1
569497	F6-1
569499	H7-1, H9-1
569509	S3-1
569692	Z5-1
569694	Z5-1, Z7-1
569696	Z7-1
569708	B3-1, B5-1
569719	B11-1
569761	E16-1
569763	H3-1
569764	T5-1
569777	T5-1
570145	B11-1, B13-1
570419	E14-1
570614	Z12-1
570676	T5-1
571021	E3-1
571441	S6-1
571511	P7-1, P9-1
571854	Z7-1
572213	H15-1
572215	H15-1
572729	C3-1, E3-1, F5-1
573472	B15-1, B17-1
573548	E3-1
573618	B17-1
573750	B17-1
574026	C3-1
574275	E3-1, E5-1, E7-1
574276	E3-1, E5-1, E7-1
574729	Z31-1
574992	Z7-1
582057	H3-1, Z5-1
584092	S2-1
584502	V17-1, Z27-1
585592	E12-1
585883	H17-1
585972	T5-1
587075	H15-1
587613	F6-1, H5-1
588399	H15-1
588612	C9-1, C10-1, C11-1
588619	C12-1, C13-1
588820	H15-1
589571	Z7-1
592849	H17-1
593267	B5-1
593268	Z3-1
593370	B11-1, B13-1, B17-1
593495	B5-1, B7-1
600259	E3-1
608241	E14-1
611074	E3-1
616783	Z5-1
616786	C7A-1, C7-1
616809	E14-1, F6-1, H5-1
619018	R4-1, R5-1, T3-1, Z5-1, Z7-1
619019	B23-1, S2-1, T3-1
619021	B3-1, B5-1, B7-1
619024	B23-1
619027	B18-1
619028	M2-1
619029	C3-1, F6-1, H5-1, S2-1, Z29-1
623762	E16-1
623829	E16-1
630292	E5-1
632289	B5-1
632710	B17-1
633157	C8-1
635583	Z11-1
635682	E12-1, H3-1
636260	B11-1, B13-1, B15-1
645092	B21-1, B22-1
645095	B23-1
648304	S5-1
652448	F3-1
652847	F5-1
654724	T4-1
655629	Z31-1
655630	R2-1, R3-1
655673	A3-1, A5-1, A7-1, A9-1, A11-1
656672	C3-1, E3-1, E15-1, E17-1, F3-1, H3-1, H13-1, H15-1, R4-1, V17-1
659764	A3-1, A5-1, A7-1, A9-1, A11-1, T7-1, T9-1, T12-1, T13-1,
660116	C9-1, C10-1, A3-1, A5-1, A7-1, A9-1, A11-1, T7-1, T13-1
661415	V2-1
661416	P7-1, P9-1
661417	B17-1
662691	S3-1
663093	H7-1, H9-1, H11-1, H13-1, H15-1
663094	Z29-1
663097	H7-1, H9-1, H11-1, H13-1
663579	E3-1, E7-1
663834	C7A-1, C7-1
664116	T10-1
664140	P7-1, P9-1, T4-1
664403	B21-1
664406	S2-1
664419	Z9-1
664962	H3-1
666854	Z11-1
667209	T4-1
667288	H17-1
669897	M2-1
672004	A15-1, A17-1, A19-1, A21-1, A23-1
675227	V17-1, Z27-1
675543	C5A-1, C5-1
675872	B22-1
703891	H7-1, H9-1, H11-1, H13-1
710034	A15-1, A17-1, A19-1, A21-1, A23-1
710035	A15-1, A17-1, A19-1, A21-1, A23-1
710053	B13-1
710126	P2-1, P3-1, P4-1
710790	C5A-1, C5-1
710791	C5A-1, C5-1, T8-1
710986	A15-1, A17-1, A19-1, A21-1, A23-1
710987	A15-1, A17-1, A19-1, A21-1, A23-1
711053	B11-1
711161	C7A-1, C7-1, T8-1
713323	A3-1, A5-1, A7-1, A9-1, A11-1
713418	C14-1
713674	Z31-1
730143	S5-1
730468	H9-1, H11-1
730482	V17-1
730503	T8-1
731221	A3-1, A5-1, A7-1, A9-1, A11-1
731283	C5A-1, C5-1
731333	Z3-1
731627	T10-1
731981	A15-1, A17-1, A19-1, A21-1, A23-1
731995	A15-1, A17-1, A19-1, A21-1, A23-1
742243	T11-1
743563	H5-1, H15-1
743848	F3-1
778570	C3-1
791018	T6-1
791553	T4-1
799020	H17-1
801006	C7-1
801437	T4-1
815352	A15-1, A17-1, A19-1, A21-1, A23-1
815648	A15-1
815748	A15-1, A17-1, A19-1, A23-1
815773	A21-1
850756	S5-1
851756	S5-1
851762	S5-1
851770	S5-1
853182	S5-1
853187	S5-1
853357	S5-1
853380	S5-1
853384	S5-1
853391	S5-1
853395	S5-1
853525	S5-1
853526	S5-1
853527	S5-1
857420	E3-1
857729	S5-1
860997	S5-1
861741	S5-1
861768	S5-1
862652	B23-1
862653	B23-1, B24-1
862655	B23-1
862656	B23-1
862738	B23-1
865961	S3-1
865963	S3-1
865965	S3-1
866348	B23-1
866349	B23-1
873250	S5-1
874767	Z7-1
875754	V2-1
875762	V2-1
875766	B20-1
875767	B20-1
876575	S3-1
877420	V11-1, V13-1, Z21-1, Z23-1, Z25-1
878645	H3-1
886526	E15-1
886851	H7-1, H9-1, H11-1 H13-1, S5-1
889239	V3-1
889242	V3-1
890374	Z31-1
890375	Z31-1
891308	Z31-1
892853	P4-1
893267	C8-1, T4-1
893681	P7-1, P9-1
894532	V2-1
894533	V2-1
894534	V2-1
894535	V2-1
894536	V2-1
894537	V2-1
894538	V2-1
894539	V2-1
894540	V2-1
894541	V2-1
894542	V2-1
894543	V2-1
895683	V3-1
899602	P4-1
940111	S5-1
940227	P4-1
940229	P4-1
940256	P4-1
940257	P4-1
941226	B23-1
941227	B23-1
941233	B24-1
941238	B23-1
941421	B3-1
941813	B11-1, B13-1, B17-1
942874	Z7-1
943431	P4-1
943432	P4-1
943438	S5-1
943442	P3-1, P4-1
943455	B19-1
943458	B19-1
943462	B19-1
943463	B19-1
943464	B19-1
943465	B19-1
943466	B19-1
943561	P2-1, P4-1
943623	Z5-1, Z7-1
943957	F6-1
944054	B23-1
944074	A21-1
944100	A21-1
944104	A21-1

https://truckmanualshub.com/

Part No.	Page No.
944105	A21-1
944106	A21-1
944107	A21-1
944108	A21-1
944109	A21-1
944110	A21-1
944186	S5-1
944192	S5-1
944195	S5-1
944197	S5-1
944198	S5-1
944494	E15-1
944499	S2-1
944656	B19-1
944657	B19-1
944658	B19-1
944659	B19-1
944660	B19-1
944661	B19-1
944663	B19-1
944664	B19-1
944665	B19-1
944667	S5-1
944735	A3-1, A5-1, A7-1, A9-1, A13-1
944745	H4-1
944803	E3-1
944804	E3-1
944872	F3-1
944968	B23-1
944969	B23-1
944977	H3-1, Z5-1
944981	S2-1
944982	S2-1
945021	E15-1
945055	E3-1
945193	Z21-1
945194	Z15-1, Z16-1, Z17-1
945313	P7-1, P9-1
945314	P9-1
945350	E13-1
945460	R2-1, R3-1
945554	Z7-1
945555	Z7-1
945576	Z7-1
945577	Z7-1
945725	A3-1, A5-1, A7-1, A9-1
945782	R2-1, R3-1
945996	V2-1
945999	Z7-1
946010	E13-1
946099	P7-1 P9-1
946100	P7-1, P9-1
946115	Z7-1
946138	S5-1
946271	P7-1, P9-1
946437	S5-1
946598	S5-1
946599	S5-1
946601	S5-1
946602	S5-1
946603	S5-1
946604	S5-1
946605	S5-1
946606	S5-1
946607	S5-1
946608	S5-1
946609	S5-1
946641	P4-1
946642	P4-1
946643	P4-1
946834	S5-1
946857	E13-1, E15-1
946860	E15-1
946943	H15-1
946953	F6-1
946954	F6-1
947160	B11-1, B13-1,B15-1,
947165	V3-1
947175	V3-1
947176	V3-1
947177	V3-1
947178	V3-1
947179	V3-1
947208	P9-1
947209	P7-1, P9-1
947225	V3-1
947226	V3-1
947250	E3-1
947252	E3-1
947254	E3-1
947275	P9-1
947277	P7-1, P9-1
947278	P7-1, P9-1
947331	P3-1, P4-1
947363	A13-1
947368	A13-1
947370	A13-1
947372	A13-1
947373	A13-1
947374	A13-1
947387	E13-1
947682	P2-1,P3-1, P4-1
947797	R2-1
947798	R2-1
947948	Z10-1
947949	Z10-1
947950	Z10-1
947976	Z10-1
947977	Z10-1
947978	Z10-1
947981	Z10-1
947982	Z10-1
947983	Z10-1
947984	Z10-1
947985	Z10-1
947986	Z10-1
947987	Z10-1
947988	Z10-1
947989	Z10-1
947990	Z10-1
947991	Z10-1
947992	Z10-1
947993	Z10-1
947994	Z10-1
947995	Z10-1
947997	Z10-1
947999	Z10-1
948010	V13-1, Z25-1
948013	V13-1
948014	V13-1
948015	V11-1, V13-1, Z21-1, Z23-1, Z25-1
948016	V11-1, V13-1, Z21-1, Z23-1, Z25-1
948017	V11-1, V13-1, Z21-1, Z23-1, Z25-1
948018	V11-1, V13-1, Z21-1, Z23-1, Z25-1
948019	V11-1, Z21-1, Z23-1
948020	V13-1, Z21-1, Z23-1, Z25-1
948021	V11-1, V13-1, Z21-1, Z23-1, Z25-1
948022	V11-1, V13-1, Z21-1, Z23-1, Z25-1
948023	V11-1, Z21-1, Z23-1
948024	V11-1, V13-1, Z21-1, Z23-1, Z25-1
948025	V11-1, V13-1, Z21-1, Z23-1, Z25-1
948026	V13-1, Z21-1, Z23-1, Z25-1
948028	V11-1, V13-1, Z21-1, Z23-1, Z25-1
948029	V11-1, V13-1, Z21-1, Z23-1, Z25-1
948030	V11-1, V13-1, Z21-1, Z23-1, Z25-1
948032	V13-1, Z21-1, Z23-1
948033	V13-1, Z25-1
948034	V13-1, Z25-1
948051	V5-1, V6-1, Z16-1, Z17-1
948054	V6-1, Z17-1
948057	V5-1, V6-1, Z15-1, Z16-1, Z17-1
948058	V5-1, V6-1, Z16-1, Z17-1
948060	V5-1, V6-1, Z15-1, Z16-1, Z17-1
948063	V8-1, Z19-1
948129	V8-1, Z19-1
948131	E3-1
948173	P2-1
948174	P2-1
948175	P4-1
948176	P4-1
948187	Z25-1
948188	Z25-1
948208	P2-1, P4-1
948431	P7-1
948433	P7-1
948434	P7-1, P9-1
948436	P7-1
948437	P7-1
948438	P7-1
948439	P7-1
948441	P7-1
948442	P7-1
948444	P6-1
948445	P6-1
948446	P8-1
948451	P7-1
948512	P7-1, P9-1
948513	P6-1
948514	P7-1
948530	R2-1
948531	R2-1
948532	R2-1
948533	R2-1, R3-1
948534	R2-1, R3-1
948535	R2-1, R3-1
948536	R2-1, R3-1
948561	P8-1
948562	P9-1
948565	P8-1
948566	P8-1
948567	P8-1
948568	P6-1
948569	P6-1
948570	P9-1
948571	P9-1
948572	P9-1
948573	P9-1
948581	P9-1
948582	P9-1
948583	P7-1, P9-1
948584	P4-1
948589	P9-1
948590	P9-1
948591	P9-1
948592	P9-1
948593	P9-1
948594	P9-1
948595	P9-1
948606	P3-1
948702	H7-1, H9-1, H11-1, H13-1
948705	P9-1
948707	P7-1
948741	P7-1
948751	P8-1
948769	P9-1
948770	P9-1
948771	P9-1
948772	P9-1
948789	V5-1, Z16-1
948794	V5-1, V6-1, Z15-1, Z16-1, Z17-1
948805	V11-1, Z21-1
948810	V11-1, Z21-1
948812	E13-1
948813	E13-1
948814	V7-1, Z18-1
948815	V7-1, Z18-1
948816	V5-1, V6-1, Z16-1, Z17-1
948817	V5-1, V6-1, Z15-1, Z16-1, Z17-1
948818	V5-1, V6-1, Z15-1, Z16-1, Z17-1
948820	V7-1, Z18-1
948821	V7-1, Z18-1
948823	V7-1, Z18-1
948824	V8-1, Z19-1
948825	V8-1, Z19-1
948846	V5-1, V6-1, Z15-1, Z16-1, Z17-1
948847	V4-1, Z15-1
948848	V8-1, Z19-1
948849	V8-1, Z19-1
948850	V8-1, Z19-1
948851	V8-1, Z19-1
948852	V8-1, Z19-1
948854	V8-1, Z19-1
948859	V7-1, Z18-1
948861	Z15-1
948903	V11-1, Z25-1
948904	P3-1
948958	Z10-1
948978	Z10-1
948979	V11-1, Z21-1, Z23-1
948980	V11-1, V13-1, Z21-1 Z23-1, Z25-1
948981	V11-1, V13-1, Z25-1
948982	Z21-1, Z23-1
948992	Z10-1
949033	Z9-1
949034	Z9-1
949036	Z9-1
949037	Z9-1

https://truckmanualshub.com/

Part No.	Page No.
949039	Z9-1
949040	P7-1
949041	P7-1
949046	P6-1
949047	Z10-1
949048	Z10-1
949054	Z9-1
949068	R3-1
949069	R3-1
949070	R3-1
949071	R3-1
949072	R3-1
949073	R3-1
949074	R3-1
949075	R3-1
949076	R3-1
949080	Z9-1
949135	A3-1, A5-1, A7-1, A9-1
949143	Z31-1
949144	Z31-1
949180	Z31-1
949181	Z31-1
949182	Z31-1
949183	Z31-1
949184	Z31-1
949185	Z31-1
949260	V2-1
949261	V2-1
949264	V2-1
949286	E3-1
949287	H4-1
949290	H4-1
949291	H4-1
949298	V7-1, Z18-1
949309	V7-1, Z18-1
949338	P6-1
949347	P6-1
949362	E15-1
949363	E15-1
949443	A19-1
949444	A19-1
949445	A19-1
949446	A13-1
949447	A13-1
949448	A13-1
949449	A13-1
949450	A13-1
949451	A13-1
949452	A13-1
949453	A13-1
949460	B24-1
949461	B24-1
949462	B24-1
949463	B24-1
949464	B24-1
949465	B24-1
949466	B24-1
949467	B24-1
949468	B24-1
949469	B24-1
949470	B24-1
949521	Z10-1
949522	Z10-1
949794	V5-1, V6-1
954277	P7-1, P9-1
980615	P4-1
992891	Z31-1
992892	Z31-1
992896	Z31-1
1300303	V17-1
1301361	E16-1
1301363	R5-1, T5-1
1303319	V3-1
1304056	V17-1
1305372	M2-1
1305485	T5-1
1306622	H7-1, H9-1, H11-1 H13-1, H15-1
1306623	H7-1, H9-1, H11-1, H13-1, H15-1, Z29-1
1306624	H7-1, H9-1, H11-1, H13-1, H17-1, Z29-1
1306625	H7-1, H9-1, H11-1
1306626	H7-1, H9-1, H11-1, S5-1
1311154	B5-1, B7-1
1311615	A3-1, A5-1, A7-1, A9-1, A11-1
1311939	A3-1, A5-1, A7-1, A9-1, A11-1
1317348	A3-1, A5-1, A7-1, A9-1, A11-1
1500453	E17-1
1500793	E15-1
1501803	Z7-1
1502876	H15-1
1503014	C12-1, C13-1
1503016	C9-1, C10-1, C11-1
1503019	C14-1
1503020	C12-1, C13-1
1503022	C9-1, C10-1, C11-1
1503027	C14-1
1503028	C12-1
1503030	C9-1, C10-1
1503033	C14-1
1503251	V17-1, Z27-1
1503466	C14-1
1503468	C12-1, C13-1
1503470	C9-1, C10-1, C11-1
1504336	F3-1
1504605	E5-1
1504697	V3-1
1505580	B11-1, B13-1, B17-1
1505581	N2-1
1505775	F5-1
1505992	B8-1
1505993	B8-1
1506345	B8-1
1506818	F3-1
1507920	F3-1
1508161	F3-1
1508514	H13-1
1508588	F5-1
1508675	F5-1
1508846	T5-1
1508863	Z11-1
1508914	Z29-1
1508950	C3-1
1509025	F6-1
1509033	E5-1
1509065	H7-1, H9-1, Z29-1
1509391	C12-1
1509394	C12-1
1509395	C12-1
1509713	B3-1, B5-1
1509720	B3-1, B5-1, B7-1
1509721	B3-1, B5-1, B7-1
1509729	B3-1, B5-1
1509786	B3-1, B5-1, B7-1
1509882	B8-1
1510064	R4-1
1510095	H5-1
1510105	B3-1
1510142	C12-1, C13-1
1510165	E17-1
1510240	Z12-1
1510360	H11-1
1510445	B5-1, B7-1
1510492	R3-1
1510505	R5-1
1510525	N2-1
1510533	F5-1
1510534	F5-1
1510661	Z10-1
1510686	E17-1
1510729	E5-1, E7-1, E12-1
1510741	V17-1
1510774	R5-1
1510775	R5-1
1510995	B5-1, F3-1
1510996	B3-1, B5-1, B7-1
1510997	B3-1, B5-1, B7-1
1510998	B3-1
1511229	C12-1, C13-1
1511230	C12-1, C13-1
1511231	C12-1, C13-1
1511232	C12-1, C13-1
1511378	C10-1, C11-1
1511383	C10-1, C11-1
1511385	C10-1, C11-1
1511386	C10-1, C11-1
1511406	C12-1
1511407	C9-1, C10-1
1511408	C9-1, C10-1
1511473	B24-1
1511520	H7-1, H9-1, H11-1, H13-1, H15-1, Z29-1
1511521	H7-1, H9-1, H11-1, H13-1, H17-1
1511522	H7-1, H9-1, H11-1
1511562	H13-1, H17-1
1511632	H11-1
1511633	H11-1
1511635	H11-1
1511636	H11-1
1511637	H11-1
1511709	Z12-1
1511710	N2-1, S5-1
1511711	N2-1
1511719	H11-1
1511720	H11-1
1511721	H11-1
1511722	H11-1
1511727	H11-1
1511798	E17-1
1511799	E17-1
1511800	E17-1
1511801	E17-1
1511805	N2-1
1511879	C10-1, C11-1
1511942	C12-1
1512006	N2-1
1512096	V17-1
1512173	B5-1
1512190	C12-1
1512200	C9-1
1512294	C11-1
1512295	C11-1
1512368	C11-1
1512415	V17-1
1512423	B5-1, B7-1
1512437	F5-1
1512515	C11-1
1512655	B7-1
1512797	B15-1
1512855	H9-1, H11-1
1512856	H4-1, H9-1
1512906	C14-1
1512908	C12-1, C13-1
1512910	C10-1, C11-1
1513022	C11-1
1513030	H11-1
1513126	H11-1
1513189	Z14-1
1513190	V4-1
1513206	C11-1
1513208	C11-1
1513209	N2-1
1513226	P6-1
1513229	B7-1
1513230	B5-1
1513291	E7-1
1513293	E3-1, E7-1
1513370	B22-1
1513540	C13-1
1513542	C13-1
1513736	H11-1
1513747	H7-1, H9-1
1513789	C11-1
1513802	C13-1
1513803	C13-1
1513804	C13-1
1513805	B7-1
1513808	C13-1
1513810	C13-1
1513815	C13-1
1513826	Z8-1
1513874	E15-1
1513887	N2-1
1513932	N2-1
1514006	C14-1
1514008	C12-1, C13-1
1514010	C10-1, C11-1
1514222	B7-1
1514223	F5-1
1514224	B7-1, F3-1
1514275	H11-1
1514276	H11-1
1514277	H11-1
1514299	E7-1
1514300	H3-1
1514302	H3-1
1514373	C10-1
1514394	B22-1
1514404	C3-1
1514406	F5-1
1514424	B15-1, B17-1
1514425	B17-1
1514428	B15-1
1514429	B17-1
1514430	B15-1
1514431	B15-1
1514434	H11-1
1514435	H11-1
1514473	B15-1
1514596	C10-1, C11-1
1514602	Z13-1
1514633	C12-1, C13-1
1514649	H7-1, H9-1, H11-1
1514650	C12-1
1514653	B15-1
1514705	C10-1
1514735	C14-1

https://truckmanualshub.com/

Part No.	Page No.
1514763	Z5-1
1514764	Z5-1
1514765	Z5-1
1514766	Z5-1
1514767	Z5-1
1514801	Z5-1
1514862	E7-1
1516040	Z8-1
1517049	B3-1
1520490	Z3-1
1520566	H15-1, H17-1
1520686	B3-1, B5-1
1521079	E14-1
1521080	E14-1
1521844	Z5-1
1522162	F5-1
1522201	F3-1
1522454	E15-1
1522535	V17-1, Z27-1
1523329	E5-1, E7-1
1523338	N2-1
1523346	H7-1, H9-1
1524162	E17-1
1525075	T5-1
1525299	F3-1
1525483	S5-1
1525710	Z7-1
1526152	C3-1
1526206	T5-1
1527276	R4-1, R5-1
1527430	N2-1
1527745	S2-1, Z8-1
1527816	S2-1
1528536	H3-1
1528537	H3-1
1528637	B5-1, B7-1
1528638	B3-1
1529233	E5-1, E7-1
1529315	E15-1
1529622	E15-1
1529623	E15-1
1529624	E15-1
1529625	E15-1
1529635	E17-1
1529679	H5-1
1529688	Z11-1
1529702	H5-1
1529704	H5-1
1529890	S5-1
1529896	H5-1
1529986	E17-1
1530361	E5-1, E7-1
1530598	H5-1
1530600	E13-1, H5-1
1532445	E13-1, H5-1
1532592	B11-1, B13-1, B15-1
1532762	B21-1
1533279	F5-1
1533882	H15-1
1534135	B11-1, B13-1, B15-1, E14-1
1534136	E3-1
1534237	C12-1
1534343	Z31-1
1534345	Z31-1
1534346	Z31-1
1534502	N2-1
1534902	B8-1
1536086	B8-1
1536570	Z7-1
1536571	Z7-1
1536572	Z5-1
1537201	C9-1, C10-1, C11-1
1537202	C9-1
1537207	C9-1
1537208	C9-1, C10-1, C11-1
1537212	C9-1, C10-1
1537215	C9-1
1537216	C9-1
1537218	C9-1
1537344	C12-1
1537424	Z8-1
1537569	F5-1
1537570	F5-1
1537676	P4-1
1537762	B3-1, B5-1, B7-1
1537763	B3-1, B5-1, B7-1
1537776	H3-1
1537839	E12-1
1537859	E12-1
1537881	V17-1, Z27-1
1537986	V17-1
1537987	Z29-1
1537996	B8-1
1538064	H5-1
1538171	C14-1
1538176	C14-1
1538178	C14-1
1538179	C14-1
1538180	C14-1
1538181	C14-1
1538211	E5-1
1538326	F5-1
1538388	F5-1
1538396	H7-1, H9-1
1538421	H7-1, H9-1, H11-1
1538436	H7-1, H9-1, H11-1
1538443	H7-1, H9-1
1538454	B11-1, B13-1
1538562	H7-1, H9-1, H11-1
1538571	F5-1
1538582	H7-1, H9-1, H11-1
1538584	H13-1
1538596	F5-1
1538605	F5-1
1538613	H17-1
1538623	Z29-1
1538646	F5-1
1538740	B11-1, B13-1
1538753	F3-1
1538754	F3-1
1538775	F3-1
1538812	V17-1, Z29-1
1538842	F3-1
1538850	F3-1
1538866	F3-1
1538873	H7-1, H9-1
1539018	P4-1
1539019	P2-1
1539411	F5-1
1540139	Z29-1
1540793	E17-1
1540843	H3-1
1540887	B5-1
1540905	H3-1
1541679	H13-1
1541770	H13-1
1541771	H15-1
1541772	H13-1
1541962	H17-1
1541969	H13-1
1541970	H15-1
1541971	H17-1
1541974	H13-1
1541975	H17-1
1542033	H13-1, H17-1
1542369	H13-1
1542371	H13-1
1542373	H13-1
1542375	H13-1
1542395	H13-1
1542646	C12-1, C13-1
1542667	C3-1
1542764	V17-1, Z27-1
1542767	V17-1
1542769	V17-1
1542776	B11-1, B13-1
1542780	B11-1, B13-1, B15-1
1542813	E5-1, E7-1
1542814	E5-1
1542815	E5-1, E7-1
1542816	E5-1
1542820	B11-1, B13-1, B15-1, B17-1
1542821	B11-1, B13-1, B17-1
1542822	B7-1
1542831	B11-1, B17-1
1542832	B11-1, B13-1
1542911	Z27-1
1543007	B3-1
1543008	F6-1
1543009	F6-1
1543238	H5-1
1543303	B3-1
1543304	E16-1
1543307	E16-1
1543323	H3-1
1543324	H3-1
1543326	H3-1
1543327	H3-1
1543435	P8-1
1543451	E12-1
1543512	H5-1
1543542	H7-1, H9-1
1543547	H17-1
1543638	E17-1
1543683	H7-1, H9-1
1543700	H7-1, H9-1
1543731	H7-1, H9-1
1543750	H7-1, H9-1
1543773	H7-1, H9-1
1543799	Z5-1
1543800	Z5-1
1543801	Z7-1
1543803	Z7-1
1543804	Z7-1
1543808	Z7-1
1543809	Z7-1
1543825	Z5-1
1543826	Z5-1
1543827	Z7-1
1543828	Z5-1
1543829	Z7-1
1543830	Z5-1
1543858	H7-1, H9-1
1543938	T5-1
1543939	T5-1
1543947	B11-1, B13-1, B15-1
1544069	F5-1
1544087	B3-1, B5-1, B7-1, F3-1
1544197	F3-1
1544319	Z5-1
1544320	Z5-1
1544448	H3-1
1544478	B8-1
1544614	E3-1
1544683	E3-1
1544695	E16-1
1544777	F6-1
1544778	H5-1
1544779	H5-1
1544780	F6-1
1544786	F6-1
1544960	B8-1
1545004	H17-1
1545055	T5-1
1545057	T5-1
1545113	R4-1, R5-1
1545114	R4-1, R5-1
1545115	R4-1, R5-1
1545116	R4-1
1545118	H13-1
1545123	R2-1
1545132	H3-1
1545165	F3-1
1545186	H17-1
1545191	B11-1, B13-1, B17-1
1545296	Z3-1
1545471	C3-1
1545548	B11-1, B13-1, B15-1
1545549	B11-1, B13-1, B15-1
1545622	Z13-1
1545623	Z13-1
1545789	B15-1
1545789	B17-1
1545790	B15-1
1545915	V11-1, Z23-1, Z25-1
1545916	V11-1, Z23-1, Z25-1
1545931	C3-1
1546079	W2-1
1546608	F3-1
1546681	Z29-1
1546683	Z29-1
1546687	Z29-1
1546688	Z29-1
1546918	H7-1, H9-1
1546919	H7-1, H9-1
1546990	B8-1
1546991	B8-1
1546992	B8-1
1547077	B8-1
1547095	B8-1
1547130	E5-1, E12-1
1547152	V17-1
1547255	B8-1
1547256	B8-1
1547274	B8-1
1547275	B8-1
1547302	S2-1
1547312	B8-1
1547346	B8-1
1547347	B8-1
1547402	B8-1
1547653	Z12-1
1547680	Z8-1
1547690	Z8-1
1547887	F5-1
1547894	R4-1
1548001	B5-1, B7-1
1548294	E16-1
1548364	N2-1
1548429	F3-1
1548542	B15-1

https://truckmanualshub.com/

Part No.	Page No.
1548630	F5-1
1548631	B11-1, B13-1, B17-1
1548632	B11-1, B13-1, B17-1
1548634	B11-1, B13-1
1548635	H7-1, H9-1, H11-1
1548654	H7-1, H9-1
1548655	H7-1, H9-1
1548747	E16-1
1548924	E7-1
1548952	B15-1
1549005	N2-1
1549006	N2-1
1549038	B15-1
1549193	Z8-1
1549298	C10-1, C11-1
1549414	E15-1
1549423	Z21-1
1549451	V11-1
1549490	P3-1
1549587	R4-1
1549705	B5-1, B7-1
1550490	P7-1
1551385	A3-1, A5-1 A7-1, A9-1
1551657	A3-1, A5-1, A7-1, A9-1
1558644	F6-1
1572355	S2-1
1573054	Z31-1
1657092	C14-1
1657101	C9-1
1657109	F3-1
1671369	E12-1
1698754	H3-1
1801087	E14-1
3290099	V2-1
3290105	V2-1
3290106	V2-1
3290122	V2-1
3290124	V2-1
3290125	V2-1
3292162	A3-1, A5-1, A7-1, A9-1
3292704	E15-1

https://truckmanualshub.com/

https://truckmanualshub.com/

https://truckmanualshub.com/

https://truckmanualshub.com/

MICHIGAN

275B TRACTOR SHOVEL

OPERATORS MANUAL SUPPLEMENT

No. 2879-R1

★

SUBJECT: Revised Stall Speed Specifications.

This Supplement covers revised stall speed specifications for Model 275B Tractor Shovels equipped with Clark C-8502-11 Torque Converters effective on machines shipped from the factory with serial numbers:

425B106 & After
425B101 FSC & After
425B101 ENC & After

★

***Old Stall Speed Specification:** 1700-1800 RPM with transmission in FORWARD — 4th (HI) and bucket in full CLOSE position.

***New Stall Speed Specification:** 1950-2050 RPM with transmission in FORWARD — 4th (HI) and bucket in full CLOSE position.

***Note:** All stall speed checks should be made with converter oil at operating temperature, approximately 180°F. to 200°F. (82°C. to 94°C.) and hydraulic system oil 150°F. (65°C.) minimum. Stall RPM is applicable to altitude of 600 ft. (183 m.) and ambient temperature of 70°F. (21°C.). Contact engine manufacturer's distributor to determine the correction necessary for altitude and temperature in your application.

★

Use this Supplement with Operators Manual No. 2653-R1

★

CLARK EQUIPMENT COMPANY

1.5M736BSPR566

Printed in U.S.A.

https://truckmanualshub.com/

https://truckmanualshub.com/

275B TRACTOR SHOVEL

MICHIGAN

OPERATORS MANUAL SUPPLEMENT

No. 2879-R1

★

SUBJECT: Revised Stall Speed Specifications.

This Supplement covers revised stall speed specifications for Model 275B Tractor Shovels equipped with Clark C-8502-11 Torque Converters effective on machines shipped from the factory with serial numbers:

425B106 & After
425B101 FSC & After
425B101 ENC & After

★

***Old Stall Speed Specification:** 1700-1800 RPM with transmission in FORWARD — 4th (HI) and bucket in full CLOSE position.

***New Stall Speed Specification:** 1950-2050 RPM with transmission in FORWARD — 4th (HI) and bucket in full CLOSE position.

***Note:** All stall speed checks should be made with converter oil at operating temperature, approximately 180°F. to 200°F. (82°C. to 94°C.) and hydraulic system oil 150°F. (65°C.) minimum. Stall RPM is applicable to altitude of 600 ft. (183 m.) and ambient temperature of 70°F. (21°C.). Contact engine manufacturer's distributor to determine the correction necessary for altitude and temperature in your application.

★

Use this Supplement with Operators Manual No. 2653-R1

★

CLARK EQUIPMENT COMPANY

1.5M736BSPR566

Printed in U.S.A.

https://truckmanualshub.com/