https://truckmanualshub.com/

SANY

Quality Changes the World

SANY HYDRAULIC EXCAVATOR
SY75C

https://truckmanualshub.com/

ENERGY SAVING STAR, LEADING THE INDUSTRY

P1
High Efficiency and Economy , Precise Control

P3
Luxurious and Comfortable Operating Experience

P5
High Reliability And Durability
Scientific Structure and Easy Maintenance

P7
Equipment Specification

P9
Standard & Optional

https://truckmanualshub.com/

HIGH EFFICIENCY AND ECONOMY PRECISE CONTROL

Rated Power ▸
40.9kW/2100rpm

▲ 4JG1-NABGB-04-C2

◆Powerful Engine

Sany engine with four-cylinder four-stroke direct-injection provides a stronger power for the excavator.

◆Auto Deceleration System

The function of auto deceleration reduces fuel consumption by 5-10%. When an operation has been stopped for 3.5 seconds, the engine speed drops automatically to idle level and maintains the idling state. When the operation is resumed by maneuvering the control levers, the engine speed will increase to the set rpm within 0.1 second. The working capability is restored instantly. The auto idle switch is always active after the excavator is restarted each time.

◆Filter Element

High precision pre-filtering removes the impurities, while the two-stage filter and one-stage water separator ensure the purity of engine fuel.

◆Environment-friendly Engine

With the exhaust emission in line with EPA interim Tier2/EU Stage 3B Emission Standards, the engine is environmentally friendly in the new era.

◆Working Efficiency

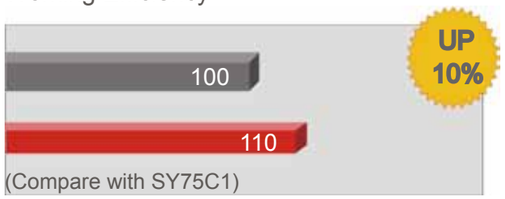

◆Using Track Roller With The Bilateral Support As Carrier Roller, SY75C-9 Achieves Higher Reliability And Stronger Traveling Force At High/low Travel Speed

With advanced travel motor and optimized flow distribution system, the machine can work more efficiently by traveling at high or low speed according to ground surface condition and working area.

◆Faster Operating Speed

A quick return line is added to the arm oil cylinder circuit, which has considerably improved the operating efficiency at low energy consumption.
The advanced main valve, which has been thoroughly optimized, is able to provide excellent coordinating and leveling performance in combined operations. It also increases the moving speed of arm and bucket. In addition to the arm regenerating function, the operating efficiency of machine has been improved by more than 10%, as compared with SY75C1.
Main pump delivery increases from 149 liters to 168 liters. Faster speed is achieved in separate operation.

◆Larger Counterweight Designed to Improve The Overall Stability of Machine

With a larger counterweight designed on the basis of balancing the wide gauge and undercarriage, the overall stability of machine is improved. By moving the center of gravity to the front, we are able to achieve more reliability in SY75C-9.

◆Left and Right Side Doors and Covers That Can Be Fully Opened

Left and right side door and rear hood can be fully open, allow the routine maintenance for engine, air-conditioning compressor belt tension and others.

◆Powerful Digging Force

Bucket digging force is up to 56kN from 53KN, and arm digging force up to 38kN from 35KN, as compared with SY75C1.

◆Load-sensitivity Flow Distribution System with Good Micro-operation Performance

Consisting of variable single pumps that provide a constant overall power, the load-sensitivity flow distribution system is of high stability and excellent micro-operation performance, offering an almost perfect meticulous process. Its superior performance lies in that flow demand is determined according to the actuators and their corresponding actions. The operating accuracy is irrelevant to load. It is only related to the deflection angle of control levers. The optimization of main valve can realize the coordination of multi-movement, making different trajectories to meet the requirements of delicate operation.

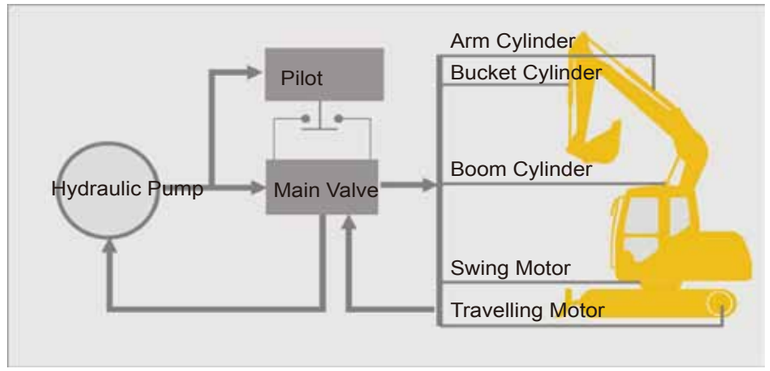

◆Innovative Dozer Blade Improve The Operating Efficiency

Equipped with an innovative dozer blade that has an increased magnitude of moving up and down, this machine is very suitable for the complex operating conditions, such as road construction, and burying pipelines or cables. The dozer blade has a special shape and a wider plate that prevent soil from falling behind, which considerably improves the operating efficiency of excavating, landfill and leveling.

◆Large-capacity Bucket and Optional Buckets

The standard bucket has a capacity of 0.28m3, which has been redesigned to reduce cutting resistance and enhance bucket strength. There are also many optional buckets available.

◆Excellent Near-body Performance

Bucket tips can be very close to the dozer blade, which makes the machine work efficiently within a wider working range.

https://truckmanualshub.com/

LUXURIOUS AND COMFORTABLE OPERATING EXPERIENCE

Innovative Cab for A Wider View

Larger windows of the newly-designed spacious cab provide you a wider view. The operator can clearly see the work equipment condition and the surrounding through the front, side and back windows. The upper window of the cab can be moved to the top of the cab when the front window is unlocked. The roof hatch is openable, through which the cab can have better ventilation and more lights. It is also helpful for you to talk with others outside the cab. The control levers and joysticks designed and arranged according to human engineering are all within the reach of operator. They can be operated easily with little force.

Humanized Facilities

Thoughtful arrangement of built-in warm/cool storage box, cup holder, literature bag and ashtray.

Air-conditioner with Multiple Air Outlets at Different Levels and Locations

High quality automatic air conditioner provides better cooling effect. It creates a more comfortable operating environment by automatically regulating the temperature and humidity inside the cab as the ambient condition changes. There are several air outlets – the front window defrost outlet ensuring operator's visibility, and the outlets for operator face, back and feet – which can be turned on/off as desired. By changing the direction of air stream, the operator can fully enjoy the benefit of air conditioner.

Well-sealed Cab, Clean and Quiet

Equipped with excellent sealing, the cab is free from dust and rain. And the low-noise design, indoor noise under 74 decibels, can effectively relieve the fatigue of operator.

Silicone Rubber Shock Absorber

The operator station is supported with innovative silicone rubber shock absorber. This shock absorber is fixed to the swing platform in four points, which has minimized the shock brought by rough road and engine or hydraulic impact, considerably increased the stability of cab, and improved the comfort of operator.

Operating Priority and Fuel-savingPriority Working Modes

The working mode can easily be changed on the monitor

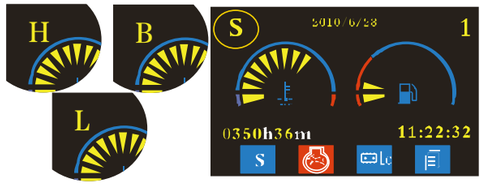

Heavy duty mode: Full power output provides efficient operation.
Standard mode: 90% of the rated power reduces fuel consumption and noise.
Light duty mode: 80% of the rated power ensures fuel economy.
Break mode: 90% of the rated power reduces fuel consumption

Multi-functional Controller with a High Brightness, Wide Viewing Angle LCD Display

Multi-functional controller ensures the system constantly in the optimum condition. When the joysticks are not operated for 3.5 seconds, the controller immediately commands the engine to lower the speed in order to reduce fuel consumption; when the engine or hydraulic system is abnormal, the fault information will appear on the monitor to warn you. High brightness, wide viewing angle industrial LCD allows the operator easily getting the information in the seat.

Muffler

The perfect match between engine and muffler reduces the noise produced by exhaust emission. The adoption of noise insulation material and improved damping system gives better stability, noise reduction and operator comfort. Lined with heat insulation material, the muffler reduces not only the noise but also the temperature of engine compartment.

SY75C-9 is fully covered with steel plates, which are more environment friendly than toughened glass and give better heat dissipation.

High-strength Top Plate

The cab top plate, formed with high-strength thick steel sheet, is well capable of ensuring operator's safety against impact and deformation.

Anti-skid Steps, Large Hand-holds, and Protective Railing on The Right of Cab

Specially designed mounting steps can effectively prevent slippery; large hand-holds can prevent people from slipping; Right railing of the cab increases the safety.

Large Rear View Mirror and Alternate Exit

Rear view mirror is mounted on both sides of the cab, through which the operator can observe the situation behind the excavator without turning back.
A cab window for alternate exit is also provided for operator to escape in case of emergency.

Access Door and Engine Hood Securing Bar

The access door is designed with a hook, and the engine hood is fixed with a gas spring that can help you open the engine hood easily for engine service. The hood can be secured with the bar during maintenance or service of the machine in order to prevent injury caused by wind.

https://truckmanualshub.com/

HIGHER RELIABILITY AND DURABILITY

Robot-welding Process

Robot-welding process can ensure the correct, strong and durable structure.

Reinforced Boom

The side plates are thicker than before. The ear plates have been redesigned to reduce stress at the bending. The boom has passed the fatigue test and field digging test (soil and rock mixture).

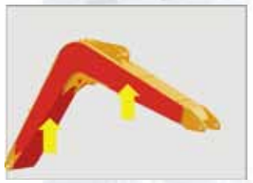

Reinforced Bucket

The shape of bucket has been redesigned. Using quality anti-wear plates with a thickness up by 33 percent as bucket bottom, the durability of bucket is greatly extended. No damage to the bucket is caused during field digging test (soil and rock mixture).

High-strength Track Frame

The optimized support of dozer blade cylinder is welded to the upper and lower plates in a gearing manner in order to have better strength and rigidity.

Undercarriage

Lateral beams using a box-type structure with high strength and rigidity, have excellent torsion and bending resistant performance.

Swing Platform

Reinforced plates, welded on the two main beam of swing platform, considerably improve the bending resistance performance. The right and left side beams and the cross beam, made of high-class steel and formed through punching, is designed in D-shaped structure and greatly strengthen the platform.

Bigger Side Doors for Easy Maintenance and Replacement

Opening the left door allows you to easily access the pilot oil source block, air cleaner, primary oil filter, and electrical parts, and to replace filter elements quickly. Opening the left door allows you to easily check the main pump and hydraulic tank hoses. The side door area is 50 percent larger than that of last generation.

Hydraulic Cylinder Buffer

A buffer provide at both ends of boom and bucket cylinders and at the rod end of bucket cylinder, can absorb the impact of the piston and the cylinder, extend cylinder service life, and reduce noise and vibration.

SCIENTIFIC STRUCTURE AND EASY MAINTENANCE

Longer Maintenance Interval

The use of quality, large-size parts and components can effectively extend machine service life and maintenance intervals, reduce downtime, and improve operating efficiency.

Maintenance Prompts

Multi-functional controller can display the items to be maintained and the time for replacement

50 service hours
- Replace engine oil and oil filter element
- Check tightening torque of bolts and nuts

250 service hours
- Add grease to the bearing of swing reducer assembly
- Clean the primary filter element of air cleaner
- Change engine oil and replace oil filter element
- Replace engine fuel filter element

Large-capacity Fuel Tank

Fuel tank capacity up to 20L reduces the times for refueling. Interior of the fuel tank has been treated well against rusting. No rusting will occur even if the tank is soaked in oil containing water or phosphoric acid, or other chemicals for a long period of time.

Toolbox and Grease Bucket Storage Place

Toolbox and grease bucket storage place is designed to facilitate the daily maintenance.

Easy Cleaning of Radiator

Opening the left rear access door allows you to access the engine radiator. The radiator is protected with a net to prevent invasion of foreign substances. You are only required to remove and clean the net.

New parallel radiators with the specially designed internal structure are easy to flush. The excellent heat dissipating performance of radiator ensures the running of engine for a long period of time.

Hoses

Quality hoses, which are used for all high-pressure circuits, have excellent wear resistance performance, extraordinary strength and brilliant resilience that can help reduce maintenance work and extend service life. The hoses used for low pressure application, which are extremely flexible, can help reduce turning radius and extend service life.

https://truckmanualshub.com/

EQUIPMENT SPECIFICATION

SPECIFICATION

ENGINE

Model.....Isuzu 4JG1-NABGB-04-C2
Displacement.....3.059L
Engine power
At rated engine speed.....40.9kw/2100rpm

HYDRAULIC SYSTEM

Type..... Load Sensibility
Number of selectable working modes..... 4
Main pump
Type.....Variable-capacity piston pumps
Maximum flow.....149ltr/min
Hydraulic motors
Travel.....2* axial piston motor with parking brake
Swing.....1* axial piston motor with swing holding brake
Relief valve setting
Implement circuits.....27.5mpa 269kg/cm2 3 , 988psi
Travel circuit.....27.5mpa 269kg/cm2 3 , 988psi
Swing circuit .....21.5mpa 210kg/cm2 3 , 118psi
Heavy lift circuit .....27.5mpa 269kg/cm2 3 , 988psi
Pilot circuit .....3.5mpa 34kg/cm2 , 507psi
Hydraulic cylinders
Boom.....1-110mm*885mm
Arm.....1-90mm*900mm
Bucket.....1-80mm*730mm

OPERATING WEIGHT

Operating weight with standard bucket, fully serviced, +75 kg operator (ISO)
Operating weight.....7355kg

UNDERCARRIAGE

Track width.....450mm
Number of track shoes.....39
Carrier roller (per side).....1
Track roller(per side).....5

TRANSMISSION

Travel Speed (Highest/Lowest).....4.4/2.4 km/h
Swing Speed.....11.5rpm
Gradeability.....70%/35
Ground Pressure.....33KPa

DIGGING FORCE

Bucket Digging Force.....56kN
Arm Digging Force.....38kN

BUCKET OPTIONAL

Capacity		Width		Weight	Number of Teeth	Arm length			
SAE	CECE	Without Side Cutters	With Side Cutters			1622mm	2050mm	mm	mm
0.16	0.14	450	570	173	3	■			
0.18	0.16	500	620	186	4	■			
0.21	0.19	560	680	197	4	■			
0.25	0.22	650	770	218	4	■			
0.28	0.25	680	795	247	4	■	●		
0.28	0.25	720	836	240	5	■			
0.32	0.28	800	922	224	5	●			

Suitable for materials with density of 1 800 kg/m3 (3 030 lb/yd3) or less ■
Suitable for materials with density of 1 600 kg/m3 (2 700 lb/yd3) or less ●
Suitable for materials with density of 1 100 kg/m3 (1 850 lb/yd3) or less △

DIMENSION

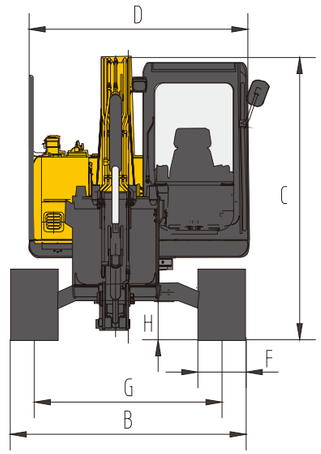

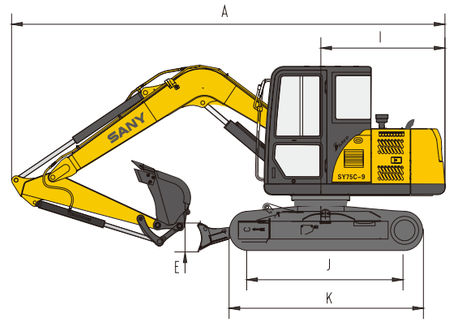

Item（Unit：mm）	SY75C
A Length (During Transportation)	6120
B Width	2220
C Height (During Transportation)	2665
D Upper Body Width	2040
E Blade Height	405
F Std. Track Width	450
G Track Gauge	1750
H Min. Ground Clearance	380
I Tail Swing Radius	1800
J Roller Gauge	2195
K Track Length	2820

OPERATION RANGE

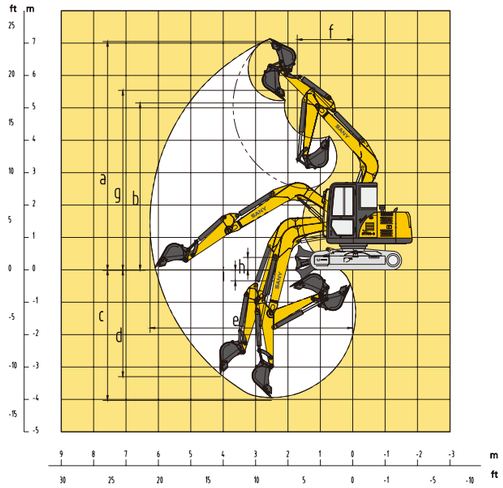

Item（Unit：mm）	SY75C
a Max. Digging Height	7060
b Max. Dumping Height	5550
c Max. Digging Depth	4020
d Max. Vertical Digging Depth	3290
e Max. Excavating Distance	6240
f Min. Swing Radius	1720
g Height at Min. Swing Radius	5550
h Maximum Ground Clearance of Bulldozer Blade(rising)	350
i Maximum Sinking Depth of Bulldozer Blade	360

Materials and specifications are subject to change without further notice in accordance with our continuous technical innovations.Photos and illustrations may not include additional equipments.

https://truckmanualshub.com/

SY75C LIFTING CAPACITY

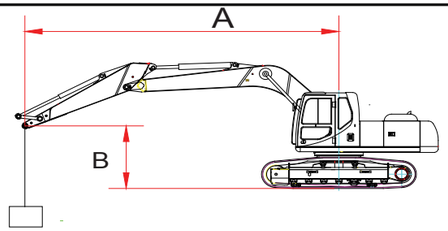

Arm Length:1622mm

Rating Over Front

Rating Over Side

A / B	MAX			2mm		3mm		4mm		5mm	
	Maximum										
5m kg	3812	1500	1500			1700	1700				
4m kg	4564	1350	1200			1850	1850	1800	1500		
3m kg	5008	1250	1050	3200	3200	2300	2200	1800	1450	1300	1050
2m kg	5225	1150	950			2650	2100	1750	1400	1250	1000
1m kg	5243	1150	900			2550	1950	1650	1400	1250	1000
0m kg	5065	1200	950			2450	1900	1650	1300	1200	950
-1m kg	4668	1300	1050	4350	3600	2450	1900	1600	1300		
-2m kg	3986	1650	1300	4450	3650	2450	1900				

Under Any Condition,the lifting capacity should be under 1000kg

Pressure and Capacities

WELGHTS AND GROUND PRESSURE

Shoe type	Shoe width	Mode SY75C9I2H	
		Operating weight	Ground pressure
Tripe grouser	450mm	7280Kg	33Kpa

SERVICE REFILL CAPACITIES

	Liters	US gal	Lmp gal
Fuel tank	130	34.2	28.6
Engine coolant	12	3.2	2.6
Engine oil	9.2	2.4	2.0
Swing device	1.5	0.4	0.3
Travel device(each side)	1.3	0.3	0.3
Hydraulic system	/	/	/
Hydraulic oil tank	120	31.6	26.4

STANDARD & OPTIONAL

STANDARD EQUIPMENT

Engine

- Alternator 30A
- Dry thriple-filtering air cleaner
- Cylindrical engine oil filter
- Fuel pre-filter
- Radiator with protective screen
- Auxiliary water tank for radiator
- Fan cowl
- Separately installed engine
- Water separator

Operator Station

- Noiseproof steel-structured cab
- Toughened light-color window
- 4 sillicone rubber damping support
- Openable roof hatch, upper front windo and left window
- Rear window,alternate exit
- silent window wiper with washer
- Adjustable inclined seat with adjustable armrest
- AM-FM radio with digital clock
- Foot rest and floor mat
- Loudspeaker,rear view mirror
- Seat belt and fire extinguisher
- Cub holder and cab light
- Ashtray
- Storage box, literature bag
- Hydraulic lockout control
- Fully automatic air-conditoner

Hydraulic System

- Control valve with main relief valve
- Spare oil port for control valve
- Oil suction filter
- Oil return filter
- Pilot filter

Undercarriage

- Travel brake
- Travel motor guard
- H-track guiding mechanism
- Hydraulic track tensioner
- Bolted sprocket
- Carrier roller and track roller
- Reinforced track link with pin seal
- 450 mm track shoe
- Bottom coverplate

Swing Platform

- Fuel level float
- Hydraulic oil level gauge
- Toolbox
- Rear view mirror (R)
- Swing brake
- Grease barrel holder
- Counterweight

Front Work Equipment

- Flange pin
- Bucket clearance adjustment
- Welded lever
- Central lubrication system
- Dust ring-seal of bucket pin
- A variety of bucket for optional

Alarm Lights

- Oil pressure lack, engine coolant
- overheat
- Throttle knob fault
- Fuel oil lack
- Voltage higher than specification Engine over speed

Indicator Lights

- Auto-idle、engine warm up
- Engine coolant temperature
- Hi/Lo speed

Monitoring System

- Standard battery
- Lockup engine hood
- Lockup fuel filler cap
- Anti-skid film, handhold and passage
- Travel direction mark
- Hand grease gun

https://truckmanualshub.com/

Quality Changes the World

SANY GROUP CO., LTD.
Address: SANY Industrial Park, Economic and Technological Development Zone, Changsha, Hunan, China
Service Hotline: +0086-4006-098-318
E-mail: crd@sany.com.cn
For more information, please visit: www.sanygroup.com

B06S2ENAM1-SY75C TIER2

Materials and specifications are subject to change without notice. Featured machines in photos may include additional equipment.
Copyright 2012 © SANY all rights reserved.