https://truckmanualshub.com/

LIFT CYLINDERS

N30XMXDR3, N45XMXR3 [B264]; N30FR; N40-45FR; N50FA; R30ES; N30XMH, N30XMH$_2$ [C210]; N25XMDR3, N30/40XMR3 [C470]; N50XMA3 [C471]; N30XMDR3, N45XMR3 [G138]; W30-40ZA [B453]; W20-30ZR [B455]; W25-30-40ZC [B454]; V30ZMD [D210/E210]; N35ZDR, N45ZR [C264]; N30ZDR, N35-40ZR [D470]; N30ZDRS, N35-40ZRS [A265]; W25-30ZA$_2$ [B495]

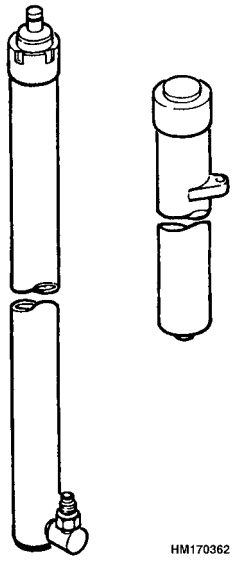

HYSTER

PART NO. 897446

4000 SRM 481

https://truckmanualshub.com/

SAFETY PRECAUTIONS
MAINTENANCE AND REPAIR

- When lifting parts or assemblies, make sure all slings, chains, or cables are correctly fastened, and that the load being lifted is balanced. Make sure the crane, cables, and chains have the capacity to support the weight of the load.
- Do not lift heavy parts by hand, use a lifting mechanism.
- Wear safety glasses.
- DISCONNECT THE BATTERY CONNECTOR before doing any maintenance or repair on electric lift trucks. Disconnect the battery ground cable on internal combustion lift trucks.
- Always use correct blocks to prevent the unit from rolling or falling. See HOW TO PUT THE LIFT TRUCK ON BLOCKS in the **Operating Manual** or the **Periodic Maintenance** section.
- Keep the unit clean and the working area clean and orderly.
- Use the correct tools for the job.
- Keep the tools clean and in good condition.
- Always use **HYSTER APPROVED** parts when making repairs. Replacement parts must meet or exceed the specifications of the original equipment manufacturer.
- Make sure all nuts, bolts, snap rings, and other fastening devices are removed before using force to remove parts.
- Always fasten a DO NOT OPERATE tag to the controls of the unit when making repairs, or if the unit needs repairs.
- Be sure to follow the **WARNING** and **CAUTION** notes in the instructions.
- Gasoline, Liquid Petroleum Gas (LPG), Compressed Natural Gas (CNG), and Diesel fuel are flammable. Be sure to follow the necessary safety precautions when handling these fuels and when working on these fuel systems.
- Batteries generate flammable gas when they are being charged. Keep fire and sparks away from the area. Make sure the area is well ventilated.

NOTE: The following symbols and words indicate safety information in this manual:

WARNING

Indicates a hazardous situation which, if not avoided, could result in death or serious injury.

CAUTION

Indicates a hazardous situation which, if not avoided, could result in minor or moderate injury and property damage.

On the lift truck, the WARNING symbol and word are on orange background. The CAUTION symbol and word are on yellow background.

https://truckmanualshub.com/

TABLE OF CONTENTS

General 1
Description 1
Lowering Control Valve 2
Main Cylinder Repair 4
Disassemble 4
Assemble 5
Free-Lift Cylinder Repair 6
Disassemble 6
Assemble 6
Troubleshooting 8

This section is for the following models:

N30XMXDR3, N45XMXR3 [B264];
N30FR; N40-45FR; N50FA; R30ES; N30XMH, N30XMH$_2$ [C210];
N25XMDR3, N30/40XMR3 [C470];
N50XMA3 [C471];
N30XMDR3, N45XMR3 [G138];
W30-40ZA [B453];
W20-30ZR [B455];
W25-30-40ZC [B454];
V30ZMD [D210/E210];
N35ZDR, N45ZR [C264];
N30ZDR, N35-40ZR [D470];
N30ZDRS, N35-40ZRS [A265];
W25-30ZA$_2$ [B495]

https://truckmanualshub.com/

"THE QUALITY KEEPERS"

HYSTER APPROVED PARTS

https://truckmanualshub.com/

General

This section has the description and repair instructions for the lift cylinders used on the N30FR, N40/45FR, N50FA, R30ES, N30XMH, N30XMH$_2$, N25XMDR3, N30/40XMR3, N50XMA3, N30XMDR3, N45XMR3, N30XMXDR3, N45XMXR3, V30ZMD, W25-30ZA$_2$, W30-40ZA, W25-30-40ZC, W20-30ZR, N30-35ZDR, N35-40-45ZR, N30ZDRS, and N35-40ZRS masts. See the section **Reach Carriages** 4500 SRM 971 or **Reach Carriages** 4500 SRM 1196 for hydraulic cylinder repair instructions for the reach carriages.

Description

The two-stage masts generally have two main lift cylinders. However, models W25/30ZA$_2$, W30/40ZA, and W25/30/40ZC lift trucks with 2 Stage LFL have only one main lift cylinder centered in the mast. The three-stage FFL models have two main lift cylinders, as well as a shorter free-lift cylinder. See Figure 1.

All of these lift cylinders are single-acting cylinders. The hydraulic force is applied only in one direction. When hydraulic oil enters one end of the lift cylinder, the hydraulic force extends the piston rod. When the force is removed, the weight of the mast components and carriage causes the piston rod to retract.

These cylinders are also single-stage lift cylinders. A single-stage lift cylinder has only one rod. See Figure 1. There are two types of single-stage cylinders used on these lift trucks. One type is the piston cylinder. The other type is a displacement cylinder. Trucks may be equipped with either piston or displacement type cylinders or a combination of both.

Piston cylinders operate by hydraulic oil entering under the piston of the cylinder rod. Seals are used in the piston to keep the oil from moving from under the piston to the top of the piston. As the hydraulic oil raises the piston, the air within the upper part of the cylinder is compressed into a chamber of the piston rod. Any oil that is above the piston will be forced, under pressure, through a check valve back under the piston.

Displacement cylinders operate by hydraulic oil entering the cylinder and displacing the rod. Seals are located in the retainer, and the entire cylinder is filled with oil. This type of cylinder will have a bleed screw located near the top of the cylinder to remove air from the cylinder. The rod of displacement cylinders is almost the size of the inside of the shell. See Figure 1.

The design and repairs for these displacement cylinders are similar to the other lift cylinders in this section. A displacement cylinder does not have a piston or piston seal. The rod diameter is almost the same as the inside diameter of the cylinder shell. There are wear rings on the rod that are the bearings between the rod and the walls of the cylinder. The wiper seal at the top of the cylinder is also the high-pressure seal for these cylinders. See Figure 3.

https://truckmanualshub.com/

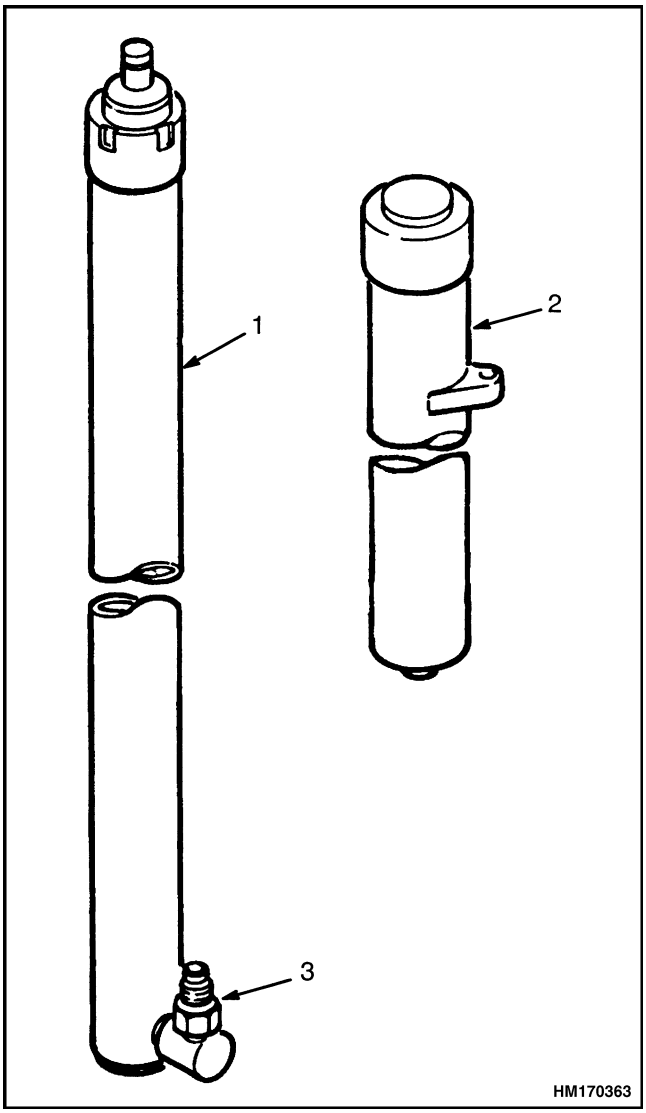

1. MAIN CYLINDER
2. FREE-LIFT CYLINDER
3. LOWERING CONTROL VALVE

Figure 1. Lift Cylinders

Spacers are used in some cylinders to limit the stroke of the piston rod. Worn spacers must be replaced with the same-size spacer.

During operation, some hydraulic oil will leak past the piston area to the rod end of the lift cylinder. Small leaks are permitted if the internal leak rate of the hydraulic system is not greater than the specification. An internal check valve is installed in the piston of the main-lift cylinders. When the piston rod extends, the pressure increases more quickly on any oil in the rod end of the lift cylinder. The hydraulic oil transfers through the check valve to the piston end of the free-lift cylinder. This action prevents hydraulic damage to the single lip seal and the wiper ring. See Figure 3.

Lift cylinders and other hydraulic parts can have some internal leaks. Internal leakage will increase as the temperature of the hydraulic oil increases. The internal leak rate of the hydraulic system is checked periodically. See the sections **Periodic Maintenance** 8000 SRM 1197, **Periodic Maintenance** 8000 SRM 970, **Periodic Maintenance** 8000 SRM 1379, or **Periodic Maintenance** 8000 SRM 1027, **Maintenance Schedule** for your lift truck and **Mast**, **Repair** 4000 SRM 482 for test procedures and leakage rate specifications.

LOWERING CONTROL VALVE

A lowering control valve (also called a velocity fuse) is installed in the inlet port of each lift cylinder. See Figure 2. It permits easy entry of hydraulic oil into the cylinder, but gives a restriction when the rod is retracted. This restriction limits the speed that a load on the forks can be lowered.

There are two types of lowering control valves: low-pressure designs and high-pressure designs. Both types have the same function and similar operation. The most common type of valve has a design that has good operation using large flows and lower pressures. Some lift trucks have a lift system design using higher pressures and a lower flow. These systems need a different type of lowering control valve.

The most common type of lowering control valve (low pressure) uses these parts: (1) a special fitting for the valve body, (2) a spring, and (3) a special washer. There is a variation in the shapes of the special washer. Different lift cylinders use different shapes of special washers. The volume of the hydraulic oil flowing through the inlet port controls the shape of the special washer. A typical shape of a special washer is shown in Figure 2. When the piston rod is lowered, the oil flow pushes against the special washer and spring. When the oil flow reaches the limit, the special washer is moved against the special fitting. The oil then flows only through the hole in the center of the special washer. This restriction permits the piston rod to lower only at a maximum controlled speed.

https://truckmanualshub.com/

The other type of lowering control valve (high pressure) uses these basic parts: (1) valve body, (2) spring, (3) washer, (4) cylinder, (5) orifice sleeve, (6) plunger, and (7) main sleeve. The orifice sleeve position is controlled completely by oil flow. The plunger position is controlled by oil pressure and spring tension. During lifting, oil entering the lift cylinder goes through the center of the main sleeve to the large holes. The oil flow through the plunger and bore moves the orifice sleeve to the end of the plunger. The flange of the orifice sleeve is then aligned with the large part of the bore in the body. This alignment lets the oil flow past the orifice sleeve to the cylinder.

During lowering, oil from the lift cylinder moves the orifice sleeve. The orifice sleeve moves away from the larger inner diameter area of the bore in the valve body. This movement makes a restriction to the oil flow. As the pressure increases, the plunger begins to move against the spring. The movement begins to close the openings of the large holes in the main sleeve. Additional pressure will push the plunger against the main sleeve to close the large holes completely. All the oil must then go through the small holes to the center of the main sleeve. This restriction permits the piston rod to lower only at a maximum controlled speed.

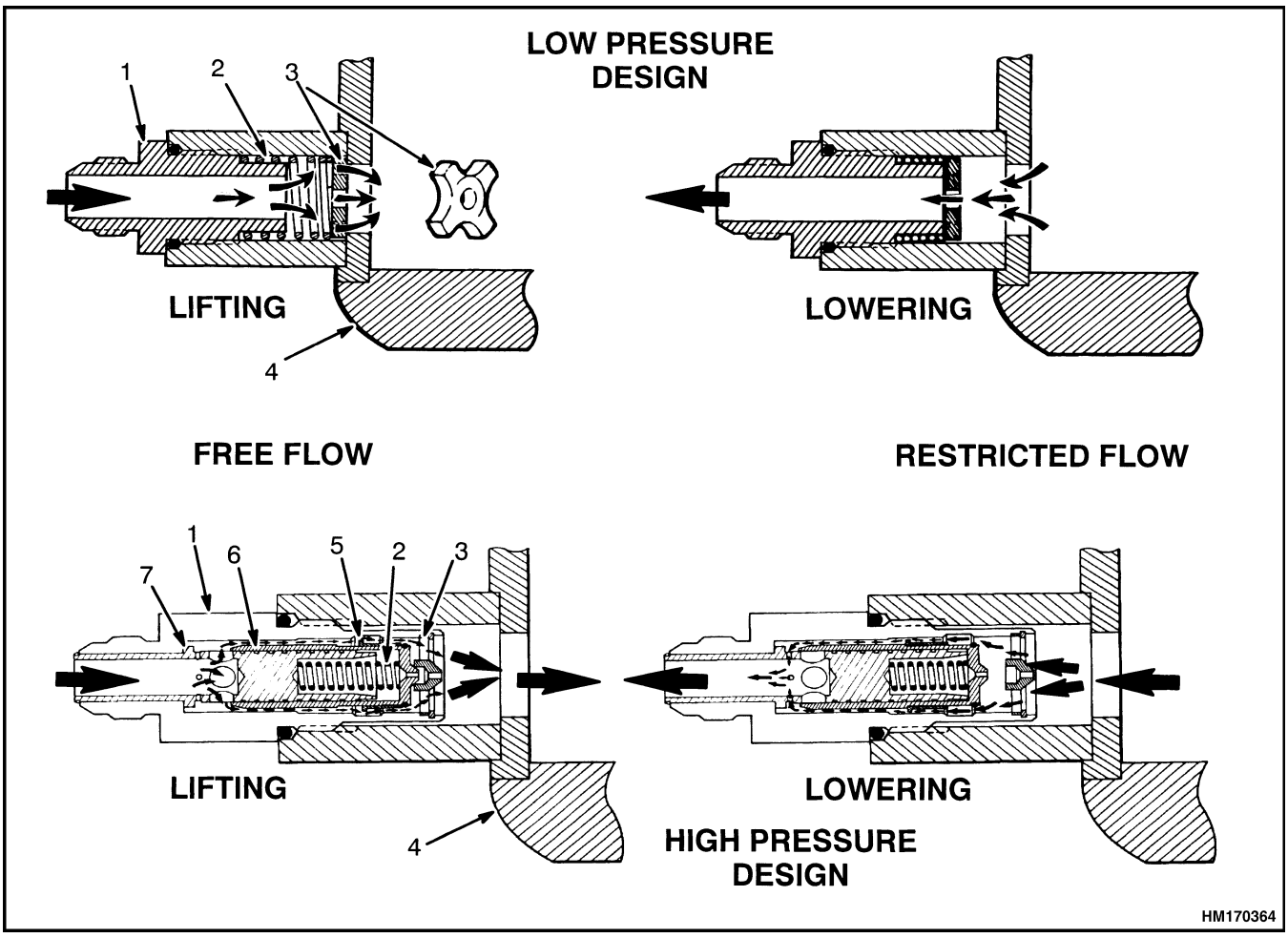

1. SPECIAL FITTING OR VALVE BODY
2. SPRING
3. WASHER
4. CYLINDER
5. ORIFICE SLEEVE
6. PLUNGER
7. MAIN SLEEVE

Figure 2. Lowering Control Valves

https://truckmanualshub.com/

Main Cylinder Repair

DISASSEMBLE

NOTE: To disassemble and repair a cylinder, the cylinder must be removed from the mast assembly. See the section **Mast**, **Repair** 4000 SRM 482 to remove the cylinders from the mast assembly.

WARNING

Use slings and a crane to handle and disassemble the lift cylinders of most lift trucks. Make sure that the crane and slings can lift the load.

CAUTION

Carefully disassemble and assemble the lift cylinders in a clean area so that the rods and sliding surfaces are not damaged.

NOTE: Make a note of the position of the replaceable parts so that they can be installed in the correct positions during assembly.

Disassemble the cylinder as follows: See Figure 3.

1. Clean the outside of the cylinder before beginning disassembly to prevent system damage from dirt.
2. Loosen the retainer using a spanner wrench. Remove the retainer from the shell.
3. Remove the cap from the inlet and carefully slide the piston rod assembly from the shell. Use drain pans for the hydraulic oil.
4. Remove the retainer from the piston rod. Remove and discard the wiper ring, O-rings, seals, and wear rings.
5. Remove the internal check valve and, if necessary, the floating piston.
6. Remove the lowering control valve.
7. Clean all the parts. Check the sliding surfaces for damage. Repair or replace any damaged parts.
8. Discard all seals, O-rings, wipers, and wear rings.

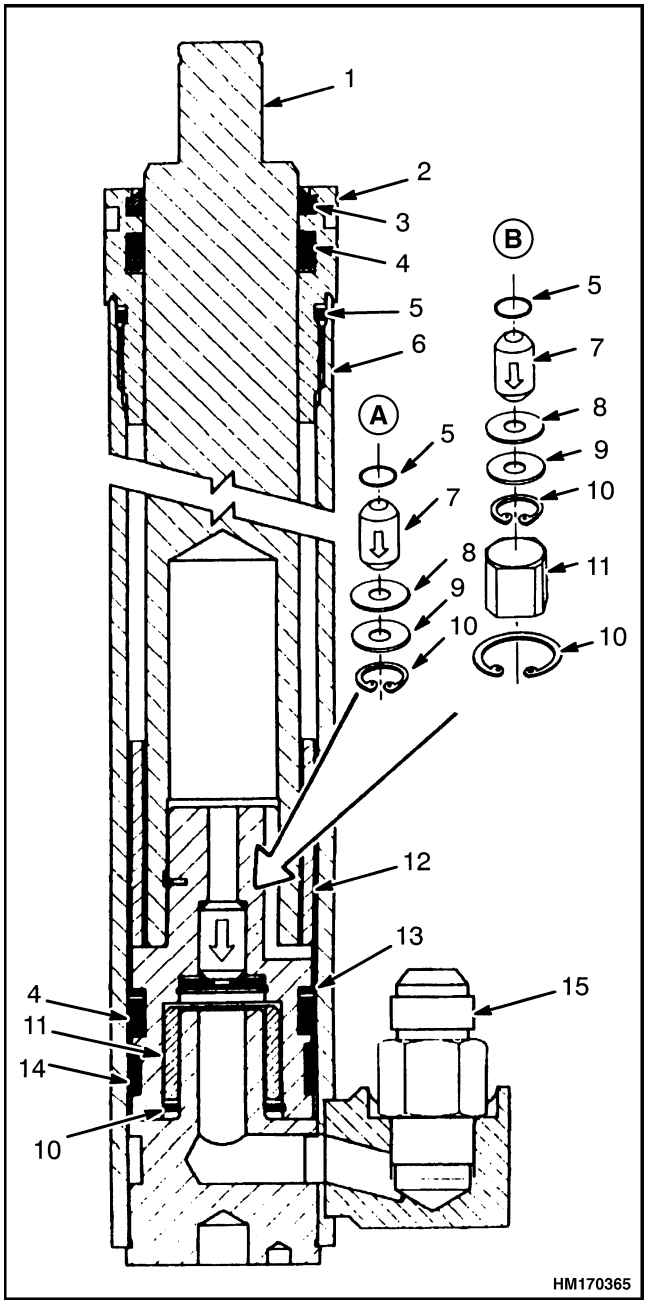

A. NONCUSHIONED

1. ROD
2. RETAINER
3. WIPER RING
4. SEAL
5. O-RING
6. SHELL
7. CHECK VALVE
8. WASHER
9. SHIM

B. CUSHIONED

10. SNAP RING
11. FLOATING PISTON
12. SPACER
13. BACKUP RING
14. WEAR RING
15. LOWERING CONTROL VALVE (ALL CYLINDERS)

Figure 3. Main-Lift Piston Cylinder

https://truckmanualshub.com/

NOTE: Inspect the piston rod surface for scratches. Check the area of the rod where the wiper ring contacts the rod. If scratches are found, use a piece of crocus cloth to polish the rod. **DO NOT** polish lengthwise; use a rotary motion. After the scratch or scratches have been removed, use another piece of fine crocus cloth with oil on it to polish the rod. Use a rotary motion to polish the rod until the finish is free of scratches and has a fine finish. Clean the rod thoroughly to remove any metal shavings, before assembly.

ASSEMBLE

NOTE:

- Use a seal kit to replace the seals. Use the installation sleeves included in the kit. See Figure 4.
- Lubricate all internal parts of the lift cylinder with hydraulic oil during assembly.
- Use new O-rings, seals, and bearings from the kit. Apply appropriate lubricant during assembly.
- Make sure the seal assemblies are installed with the "open" end toward the base of the lift cylinder.
- The spacer controls the maximum stroke of the piston rod assembly. If a new spacer is necessary, make sure the same-size spacer is installed.

1. Install the internal check valve. See Figure 3. Install the floating piston on applicable units. Make sure the arrow on the internal check valve is toward the base of the piston.

2. Install the seal and bearing (and spacer if equipped) on the piston rod. Use shim material and a clamp as a guide to move the seal past the threads of the shell.

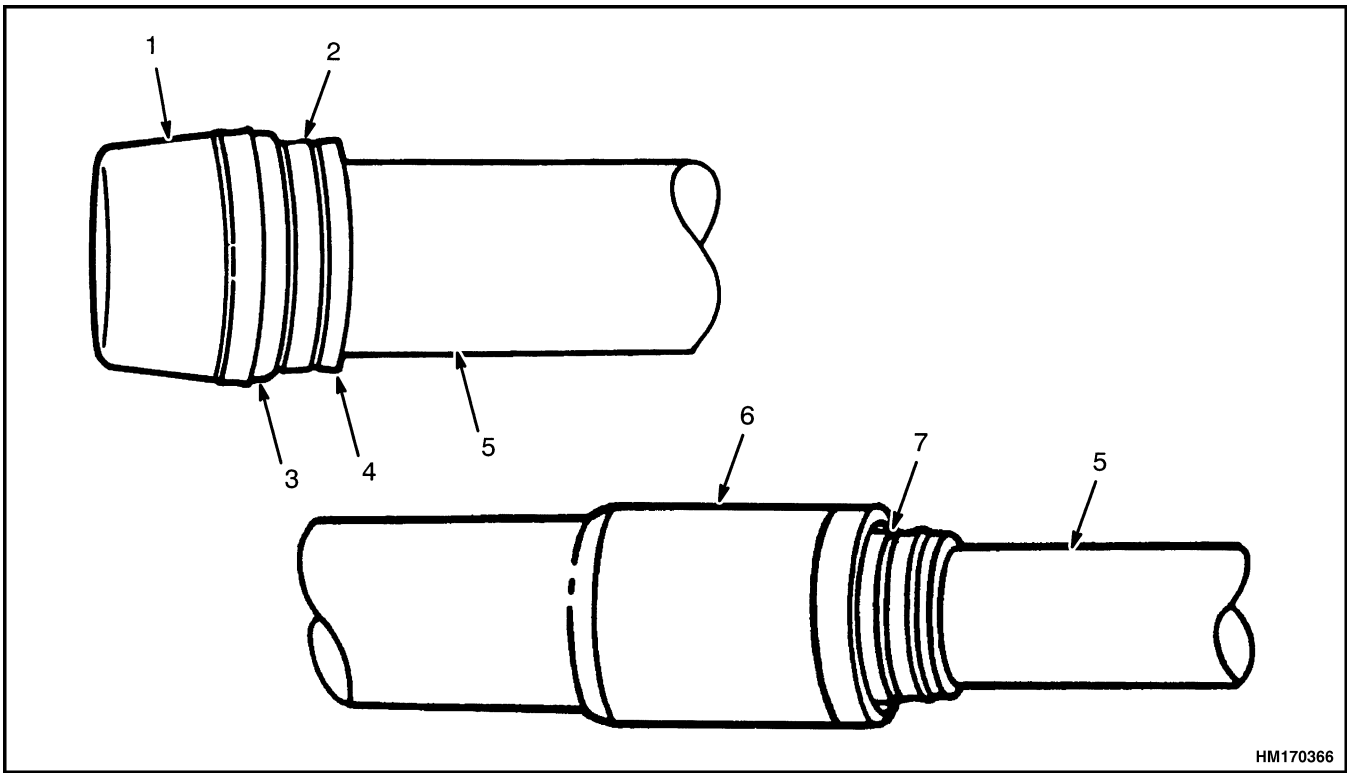

1. EXTERNAL INSTALLATION SLEEVE
2. SEAL
3. WEAR RING
4. BACKUP RING
5. PISTON ROD
6. CYLINDER SHELL
7. INTERNAL INSTALLATION SLEEVE

Figure 4. Seal Installation Sleeves

https://truckmanualshub.com/

CAUTION

A difficult and important step in assembling cylinders is the correct installation of the seals without damage. Most cylinder maintenance is caused by seal leakage. Special tools are available in the seal kit for correct installation of the seals.

3. Carefully push the piston and piston rod into the shell. Release the clamp on the seal when the seal travels past the threads of the shell.

4. Install the seals, O-rings, and wiper ring in the retainer. If the wiper ring has a spring backup ring, the spring must be toward the base of the lift cylinder.

5. Carefully install the retainer on the piston rod.

6. Engage the threads and tighten the retainer in the shell to 340 to 410 N•m (251 to 302 lbf ft). Use the correct spanner wrench. **DO NOT** hit the retainer with a hammer and driver.

CAUTION

Wrong installation of the special washer and spring can make the load lower too fast.

7. Install the lowering control valve. Make sure the special washer and the spring are installed correctly. A wrong installation can cause the load to lower too fast.

8. See the section **Mast**, **Repair** 4000 SRM 482 for cylinder installation in the mast assembly.

Free-Lift Cylinder Repair

DISASSEMBLE

NOTE: To disassemble and repair a cylinder, the cylinder must be removed from the mast assembly. See the section **Mast**, **Repair** 4000 SRM 482 to remove the cylinder from the mast assembly.

WARNING

Use slings and a crane to handle and disassemble the lift cylinders of most lift trucks. Make sure that the crane and slings can lift the load correctly.

CAUTION

Carefully disassemble and assemble the lift cylinders in a clean area so that the piston rods and sliding surfaces are not damaged.

1. Loosen the retainer with a spanner. Remove the retainer from the shell. See Figure 5.

2. Remove the protective cap from the inlet and slide the rod and piston assembly from the shell. Drain the hydraulic oil into a container.

3. Remove the retainer from the piston rod. Remove and discard all O-rings, seals, and bearings.

4. Remove the internal check valve plugs and balls from the base of the rod.

5. Clean all the parts. Check the sliding surfaces for damage. Repair or replace any damaged parts.

ASSEMBLE

NOTE: Inspect the piston rod surface for scratches. Check the area of the rod where the wiper ring contacts the rod. If scratches are found, use a piece of crocus cloth to polish the rod. **DO NOT** polish lengthwise; use a rotary motion. After the scratch or scratches have been removed, use another piece of fine crocus cloth with oil on it to polish the rod. Use a rotary motion to polish the rod until the finish is free of scratches and has a fine finish. Clean rod thoroughly to remove any metal shavings, before assembly.

NOTE:
- Use a seal kit to replace the seals. Use the installation sleeves included in the kit. See Figure 4.
- Lubricate all internal parts of the lift cylinder with hydraulic oil during assembly.
- Use new O-rings, seals, and bearings. Apply appropriate lubricant (hydraulic oil) during assembly.
- Make sure the seal assemblies are installed with the "open" end toward the base of the lift cylinder.

https://truckmanualshub.com/

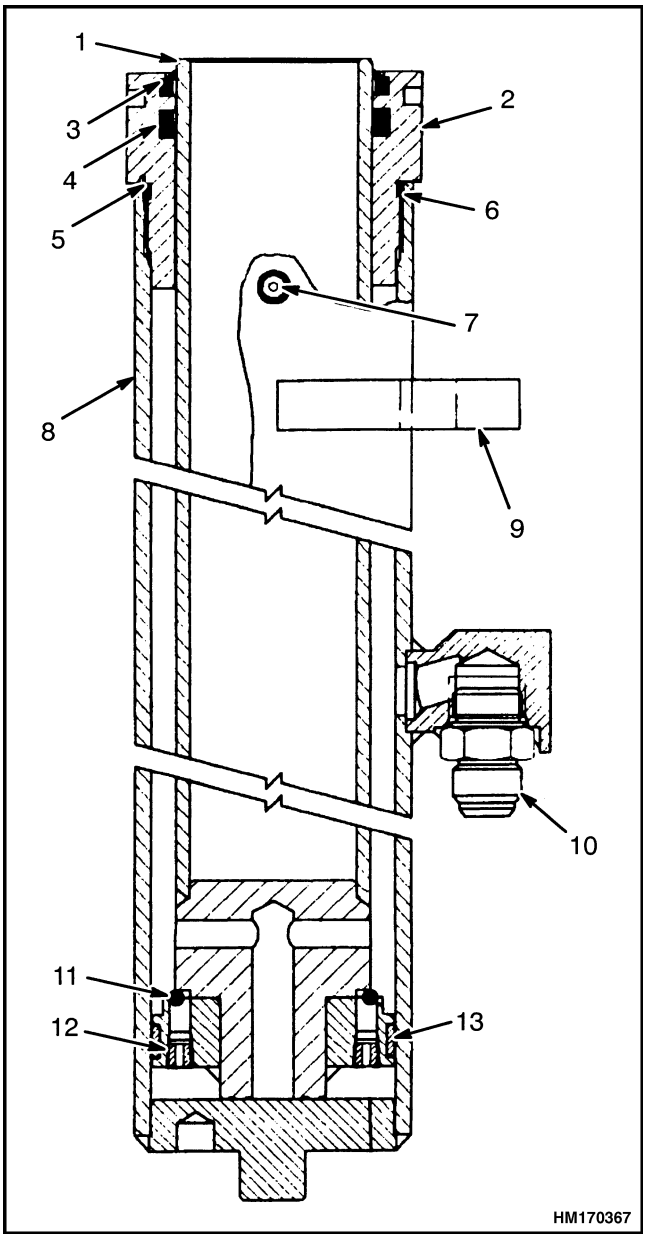

1. ROD
2. RETAINER
3. WIPER RING
4. SEAL
5. O-RING
6. BACKUP RING
7. BLEED SCREW AND SEAL
8. SHELL
9. CHAIN ANCHOR
10. LOWERING CONTROL VALVE (ALL CYLINDERS)
11. STEEL BALL
12. PLUG
13. WEAR PLUG

Figure 5. Free-Lift Displacement Cylinders

CAUTION

A difficult and important step in assembling lift cylinders is the correct installation of the seals. Most lift cylinder maintenance is caused by seal leaks. Special installation sleeves come in the seal kits.

1. Install the internal check valve, if installed. See Figure 5. Make sure the arrow on the internal check valve is toward the base of the piston.
2. Install the wear ring, single lip seal, and backup ring onto the piston assembly. If a spacer is used, install it. Use shim material and a clamp as a guide to move the seal over the threads of the shell.
3. Carefully push the piston and rod assembly into the shell. Release the clamp on the seal when the seal travels past the threads of the shell.
4. Install the seal, O-ring, wear ring, and wiper ring in the retainer. If the wiper ring has a spring for a backup ring, the spring must be toward the base of the lift cylinder.
5. Carefully install the retainer on the piston rod.
6. Engage the threads and tighten the retainer in the shell to the proper torque. Refer to **Capacities and Specifications** 8000 SRM 1198, **Capacities and Specifications** 8000 SRM 1028, **Capacities and Specifications** 8000 SRM 1380, or **Capacities and Specifications** 8000 SRM 972 for your truck model. Use the correct spanner wrench. **DO NOT** hit the retainer with a hammer and driver.

CAUTION

Wrong installation of the special washer and spring can make the load lower too fast.

7. Install the lowering control valve. Make sure the special washer and the spring are installed correctly. A wrong installation can cause the load to lower too fast.
8. See the section **Mast**, **Repair** 4000 SRM 482 for cylinder installation in the mast assembly.

https://truckmanualshub.com/

Troubleshooting

PROBLEM	POSSIBLE CAUSE	PROCEDURE OR ACTION
No movement of lift cylinders.	No oil or not enough oil supply to lift cylinder.	Check oil level and add oil as needed.
	Hydraulic leaks, damaged hydraulic pump, or damaged hydraulic pump drive.	Repair hydraulic leaks. Replace pump or pump drive. Replace check valve. Reset relief valve to correct setting.
	Relief valve setting wrong or check valve damaged.	Adjust relief valve setting. Replace check valve.
Slow action of the lift cylinders.	Not enough oil supply to the lift cylinder.	Check oil level and add oil as needed.
	Bad cylinder seal. Check for internal leaks. Install a gate valve in the hydraulic line. Raise the mast. Close the gate valve. See if the mast or carriage slowly lowers because of an internal leak.	Replace cylinder seals.
	Low relief valve setting.	Adjust relief valve to correct setting.
Rough movement of the mast assembly.	Air in the hydraulic system.	Remove air from hydraulic system.
	Bent piston rod, or cylinder shell is damaged.	Replace cylinders.
	Mast assembly is damaged or not in alignment.	Repair damage or realign mast assembly.

https://truckmanualshub.com/

https://truckmanualshub.com/

HYSTER TECHNICAL PUBLICATIONS

4000 SRM 481 4/08 (11/06)(10/06)(5/04)(4/03)(5/98)(4/97)(1/96)(12/95)(6/92) Printed in U.S.A.