# POWER GENERATION
# GECURSOR350E.R990

## List of recommended parts

Elenco ricambi consigliati
Liste des pièces conseillées
Empfohlene Verfügbare Ersatz-Verschleißteile
Lista des piezas aconsejadas

| Part number | Item | Q.ty | Description | Hrs. **1000** | Hrs. **2500** | Hrs. **5000** | Hrs. **10000** |
|---|---|---|---|---|---|---|---|
| 2992544 | 01 | 2 | OIL FILTER CARTRIDGE | 2 | 5 | 10 | 20 |
| 2994048 | 03 | 1 | FUEL FILTER ELEM. | 2 | 5 | 10 | 20 |
| 500331074 | 05 | 6 | NOZZLE PUMP | | | | 6 |
| 500341810 | 07 | 1 | V-BELT | | 1 | 3 | 6 |
| 8093741 | 11 | | VALVES GRIND SET | | 1 | 1 | 1 |
| 8093740 | 12 | | KIT-OVERHAL.GASKET | | | | 1 |
| 504007514 | 13 | 1 | CYL.HEAD GASKET | | | | 1 |
| 2992157 | 14 | 6 | PISTONRING SET STD | | | | 6 |
| 2992257 | 14 | 6 | PISTON ASSY | | | | 6 |
| 2992137 | 15 | 6 | MAIN BEARING SET RED | | | | 6 |
| 2992138 | 15 | 6 | MAIN BEARING SET GREEN | | | | 6 |
| 2992158 | 16 | 6 | CON.ROD BEAR STD. RED | | | | 6 |
| 2992159 | 16 | 6 | CON.ROD BEAR STD. GREEN | | | | 6 |
| 2992143 | 17 | 1 | MAIN BEARING SET RED | | | | 1 |
| 2992144 | 17 | 1 | THRUSTRING SET STD GREEN | | | | 1 |
| 500337911 | 18 | 6 | CYLINDER LINER STANDARD | | | | 6 |
| 500380713 | 19 | 1 | VIBRATION DAMPER | | | | 1 |
| 500355778 | 20 | 12 | INLET VALVE | | | | 12 |
| 504080352 | 21 | 12 | EXHAUST VALVE | | | | 12 |
| 500390993 | 22 | 12 | VALVE GUIDE INTAKE | | | 12 | 12 |
| 500390994 | 23 | 12 | VALVE GUIDE EXHAUST | | | 12 | 12 |
| 99450511 | 24 | 12 | VALVE SEAT STD. INTAKE | | | | 12 |
| 99450512 | 25 | 12 | VALVE SEAT STD. EXHAUST | | | | 12 |
| 504115756 | 29 | 1 | TURBOCHARGER | | | | 1 |
| 99452340 | 30 | 1 | LUBE OIL PUMP ASSY | | | | 1 |
| 500356553 | 31 | 1 | WATER PUMP | | | | 1 |
| 99486046 | 34 | 1 | STARTER MOTOR ALTERNATIVE USE | | | 1 | 1 |
| 500315943 | 36 | 1 | ALTERNATOR | | | 1 | 1 |

| Part number | Item | Q.ty | Description | Hrs. **1000** | Hrs. **2500** | Hrs. **5000** | Hrs. **10000** |
|---|---|---|---|---|---|---|---|
| 98498467 | 38 | 1 | OIL COOLER | | | | 1 |
| 8019921 | 39 | 1 | HAND PUMP | | | | 1 |
| 2992662 | 42 | 1 | FUEL FILTER ELEM. | 2 | 5 | 10 | 20 |
| 500382599 | 45 | 2 | TEMP. TRANSMITTER PRESS. & TEMPER. | | | 1 | 2 |
| 98442879 | 46 | 1 | PRESSURE SWITCH SIPEA | | | 1 | 2 |
| 99450797 | 47 | 1 | SENSOR albero a camme | | | 1 | 2 |
| 500351609 | 50 | 1 | SENSOR OIL PRESSURE | | | 1 | 2 |
| 504073323 | 52 | 1 | SENSOR AIR PRESS. & TEMPER. | | | 1 | 2 |
| 8041461 | 56 | 1 | FAN | | | | 1 |
| 8025818 | 57 | 1 | AIR FILTER ELEMENT PRIMARY | 1 | 2 | 3 | 6 |
| 8107632 | 59 | 1 | RADIATOR PLUG | 1 | 1 | 1 | 1 |

| COMPLETE ENGINE | 0100.312 |
|---|---|

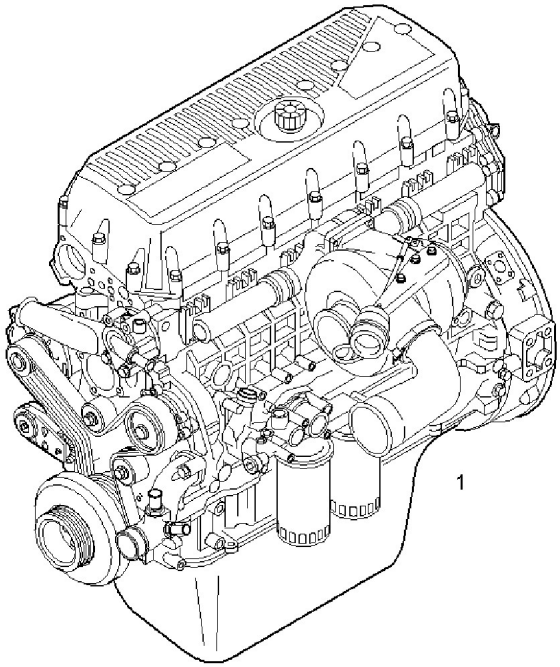


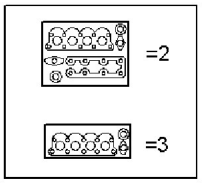


| Item | Part number | Q.ty | Description | See also | Producer Note |
|---|---|---|---|---|---|
| 1 | 504090622 | 1 | ENGINE COMPLETE | | |
| 2 | 8093740 | | KIT-OVERHAL.GASKET | | |
| 3 | 8093741 | | VALVES GRIND SET | | |


Iveco Motors Spare Parts Catalog - Copyright © 2002-2006 Iveco Motors

CRANKCASE | 0401.002

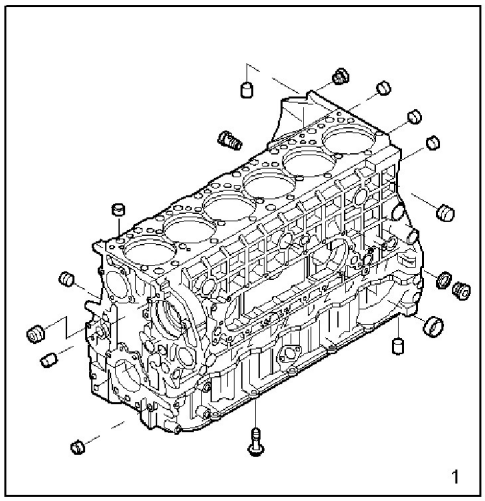


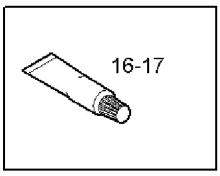


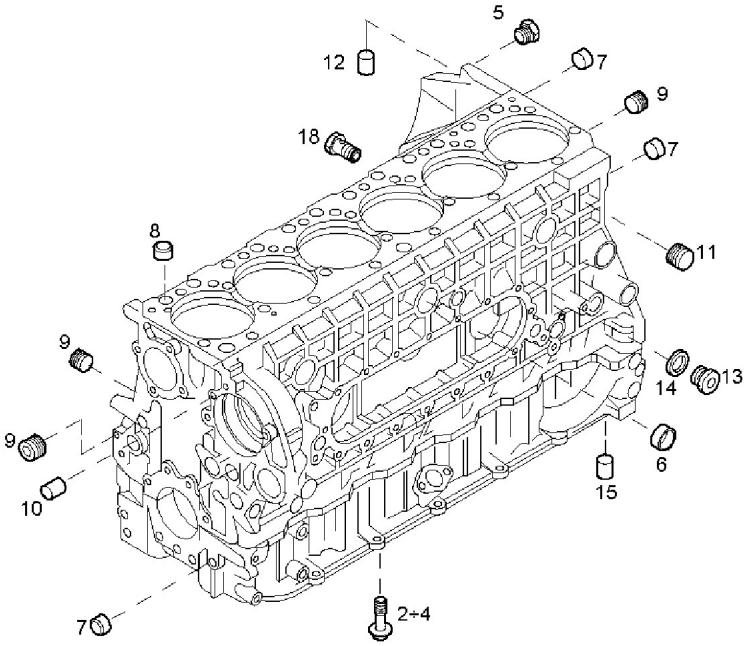


| Item | Part number | Q.ty | Description | See also | Producer Note |
|---|---|---|---|---|---|
| 1 | 504105808 | 1 | CRANKCASE | | |
| 2 | 504108192 | 14 | HEXAGON BOLT | | |
| 3 | 99432869 | 25 | HEXAGON BOLT | | |
| 4 | 99433863 | 1 | HEXAGON BOLT | | |
| 5 | 99433597 | 3 | THREADED PLUG | | |
| 6 | 16991370 | 2 | LOCK PLUG Ø45 MM | | |
| 7 | 16990870 | 3 | LOCK PLUG Ø28 MM | | |
| 8 | 16990670 | 6 | LOCK PLUG Ø22 MM | | |
| 9 | 504051238 | 3 | THREADED PLUG DIAM=3/8" | | |
| 10 | 504120669 | 1 | LOCK PLUG M24X1,5 | | |
| 11 | 504051237 | 1 | THREADED PLUG DIAM=1/4" | | |
| 12 | 500368916 | 1 | OIL NOZZLE | | |
| 13 | 16992415 | 1 | THREADED PLUG M16X1,5 | | |
| 14 | 99489019 | 1 | WASHER Ø16X24 MM SP=1,5 MM | | |
| 15 | 99467554 | 4 | DOWEL PIN Ø14 MM | | |
| 16 | 2992695 | 1 | ADHESIVE/STICKER LOCTITE | | |
| 17 | 2995644 | 1 | ADHESIVE/STICKER | | |
| 18 | 504138062 | 2 | PLUG | | |


Iveco Motors Spare Parts Catalog - Copyright © 2002-2006 Iveco Motors

| CYLINDER LINER | 0403.001 |
|---|---|

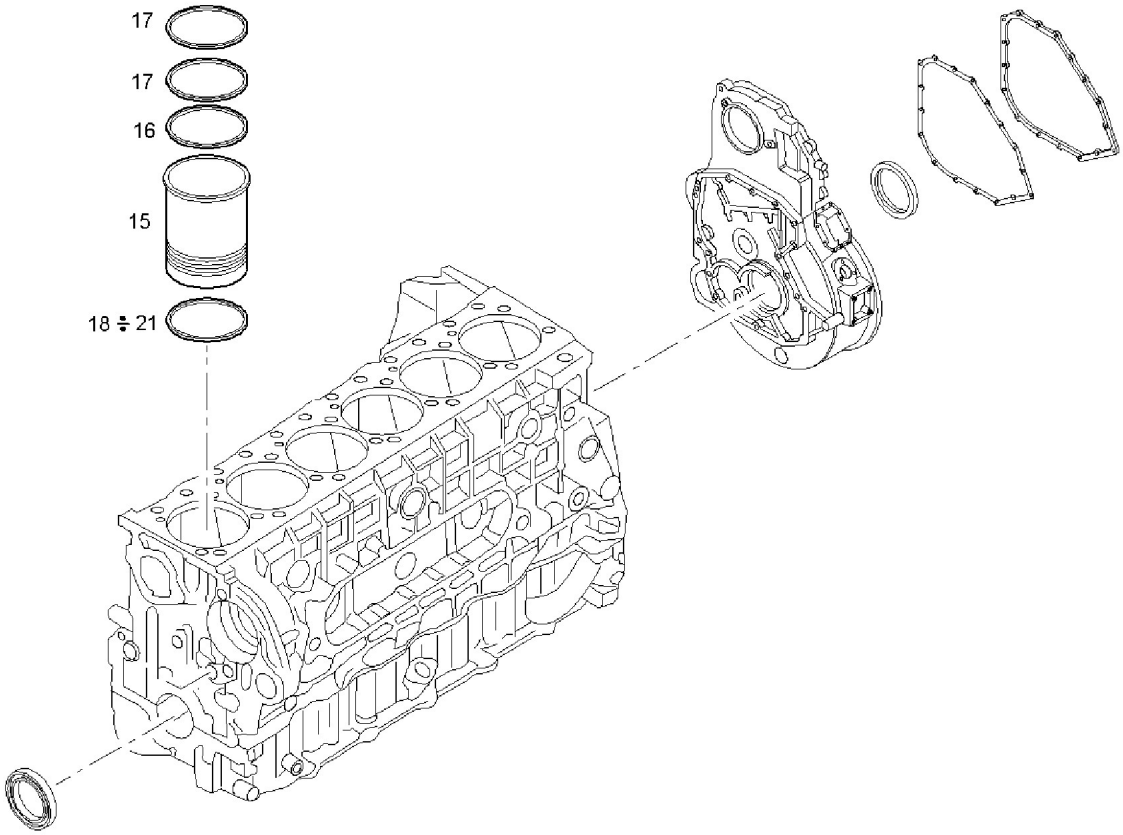


| Item | Part number | Q.ty | Description | See also | Producer Note |
|---|---|---|---|---|---|
| 15 | 500337911 | 6 | CYLINDER LINER STANDARD | | |
| 16 | 99455400 | 6 | O-RING Ø152 MM SP=3,53 MM | | |
| 17 | 99455401 | 12 | O-RING Ø152 MM SP=3,53 MM | | |
| 18 | 99448192 | 6 | SPAC.RING CYL.LIN. SP=0,1 MM | | |
| 19 | 99448190 | 6 | SPAC.RING CYL.LIN. SP=0,12 MM | | |
| 20 | 500378983 | 6 | SPAC.RING CYL.LIN. SP=0,14 MM | | |
| 21 | 99448193 | 6 | SPAC.RING CYL.LIN. SP=0,08 MM | | |


Iveco Motors Spare Parts Catalog - Copyright © 2002-2006 Iveco Motors

FIXING EQUIPMENT | 0407.003

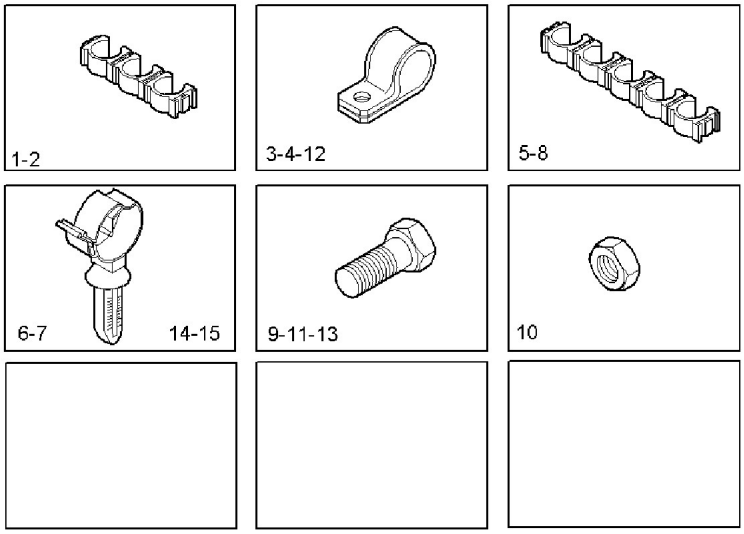


| Item | Part number | Q.ty | Description | See also | Producer Note |
|---|---|---|---|---|---|
| 1 | 504060998 | 3 | SPRING CLAMP | | |
| 2 | 504056815 | 1 | HITCH ASSY. | | |
| 3 | 10450990 | 3 | PIPE CLIP | | |
| 4 | 41202595 | 1 | FASTENING BRACKET | | |
| 5 | 500306941 | 2 | SPRING CLAMP | | |
| 6 | 504000061 | 1 | CLIP | | |
| 7 | 504000058 | 1 | CLIP | | |
| 8 | 504056785 | 1 | SPRING CLAMP | | |
| 9 | 16673635 | 1 | HEXAGON BOLT M8X1.25X20 | | |
| 10 | 17044725 | 1 | HEXAGON NUT M8 | | |
| 11 | 16596924 | 1 | HEXAGON BOLT M6X10 MM | | |
| 12 | 17317092 | 1 | FASTENING BRACKET | | |
| 13 | 16597925 | 2 | HEXAGON BOLT M8X14 MM | | |
| 14 | 504000063 | 1 | CLIP | | |
| 15 | 99455033 | 6 | CLIP | | |


Iveco Motors Spare Parts Catalog - Copyright © 2002-2006 Iveco Motors

| OIL NOZZLE | 0414.001 |
|---|---|

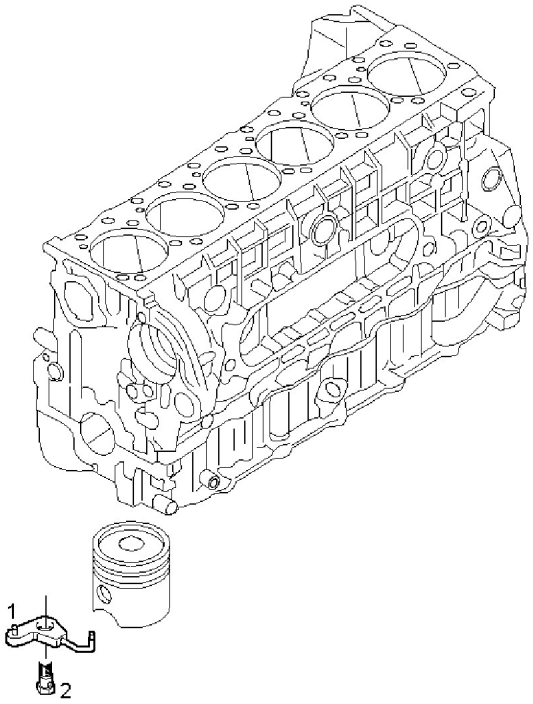


| Item | Part number | Q.ty | Description | See also | Producer Note |
|---|---|---|---|---|---|
| 1 | 504026208 | 6 | OIL NOZZLE | | |
| 2 | 99474718 | 6 | SCREW CONNECTOR M12X1,5 | | |


Iveco Motors Spare Parts Catalog - Copyright © 2002-2006 Iveco Motors

| OIL SUMP | 0420.189 |
|---|---|

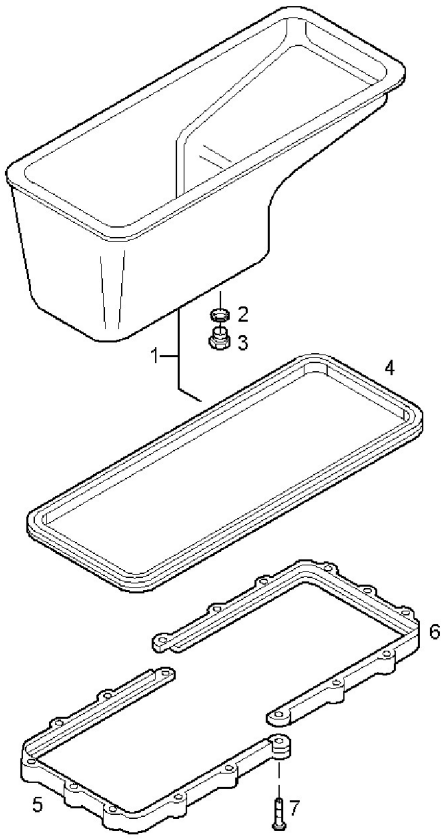


| Item | Part number | Q.ty | Description | See also | Producer Note |
|---|---|---|---|---|---|
| 1 | 504024778 | 1 | OIL SUMP ASSY | | |
| 2 | 99489022 | 1 | SEAL GASKET Ø22X30 MM SP=1,5 MM | | |
| 3 | 16992611 | 1 | THREADED PLUG M22X1,5 | | |
| 4 | 504024777 | 1 | OIL SUMP GASKET | | |
| 5 | 99449984 | 1 | SPACING BAR | | |
| 6 | 99449985 | 1 | SPACING BAR | | |
| 7 | 16587525 | 16 | HEXAGON BOLT M10X45 MM | | |


Iveco Motors Spare Parts Catalog - Copyright © 2002-2006 Iveco Motors

REAR C.CASE COVER | 0432.005

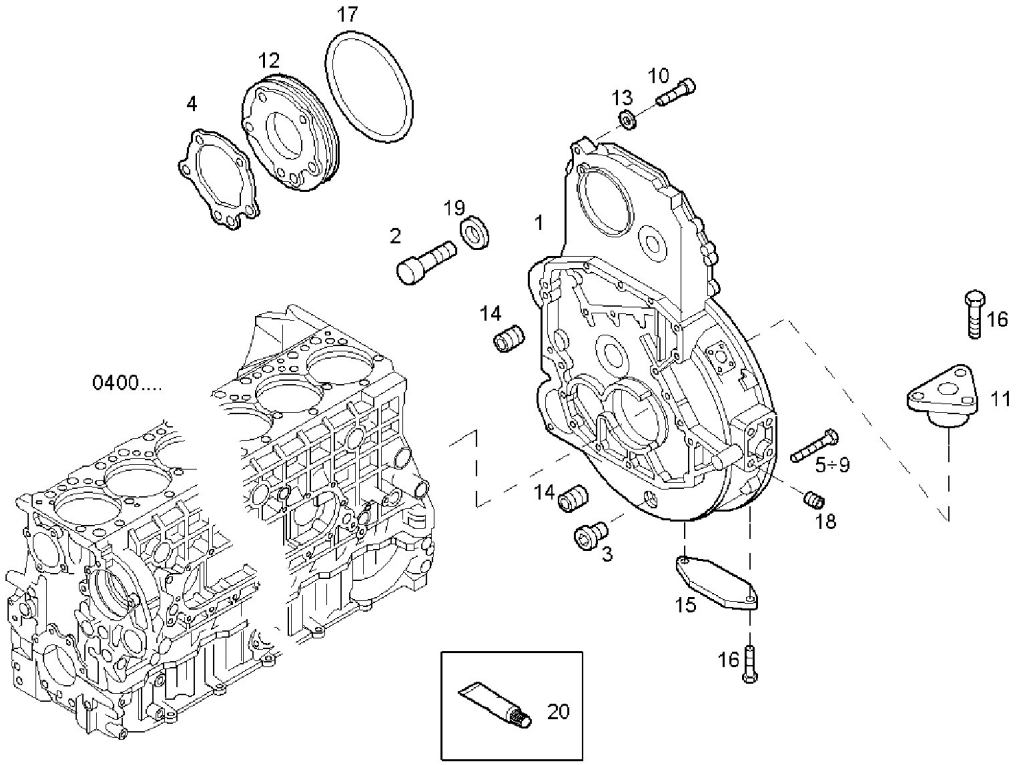


| Item | Part number | Q.ty | Description | See also | Producer Note |
|---|---|---|---|---|---|
| 1 | 500324441 | 1 | TIMINGGEAR HOUSIN | | |
| 2 | 504087515 | 1 | SHEAR SCREW | | |
| 3 | 16992915 | 1 | THREADED PLUG M52X2 MM | | |
| 4 | 99488739 | 1 | FLAT ENGINE GKT | | |
| 5 | 16593425 | 10 | HEXAGON BOLT M12X100 MM | | |
| 6 | 16588125 | 4 | HEXAGON BOLT M12X35 MM | | |
| 7 | 16593625 | 1 | HEXAGON BOLT M12X120 MM | | |
| 8 | 99475978 | 2 | HEXAGON BOLT | | |
| 9 | 16588825 | 2 | HEXAGON BOLT M12X1,25X70 MM | | |
| 10 | 16675835 | 2 | HEXAGON BOLT M10X30 MM | | |
| 11 | 99472521 | 1 | CONNECTING PLATE | | |
| 12 | 500322294 | 1 | SPACER RING | | |
| 13 | 98474305 | 2 | WASHER Ø10X17 MM SP=2,3 | | |
| 14 | 17275610 | 2 | DOWEL PIN | | |
| 15 | 4851842 | 1 | COVER | | |
| 16 | 16597925 | 4 | HEXAGON BOLT M8X14 MM | | |
| 17 | 17292381 | 1 | O-RING Ø129,8 MM SP=3,53 MM | | |
| 18 | 500323467 | 8 | THREADED INSERT | | |
| 19 | 16892924 | 1 | WASHER | | |
| 20 | 2995644 | 1 | ADHESIVE/STICKER | | |


Iveco Motors Spare Parts Catalog - Copyright © 2002-2006 Iveco Motors

| GASKET REVOLVING SHAFT | 0438.001 |
|---|---|

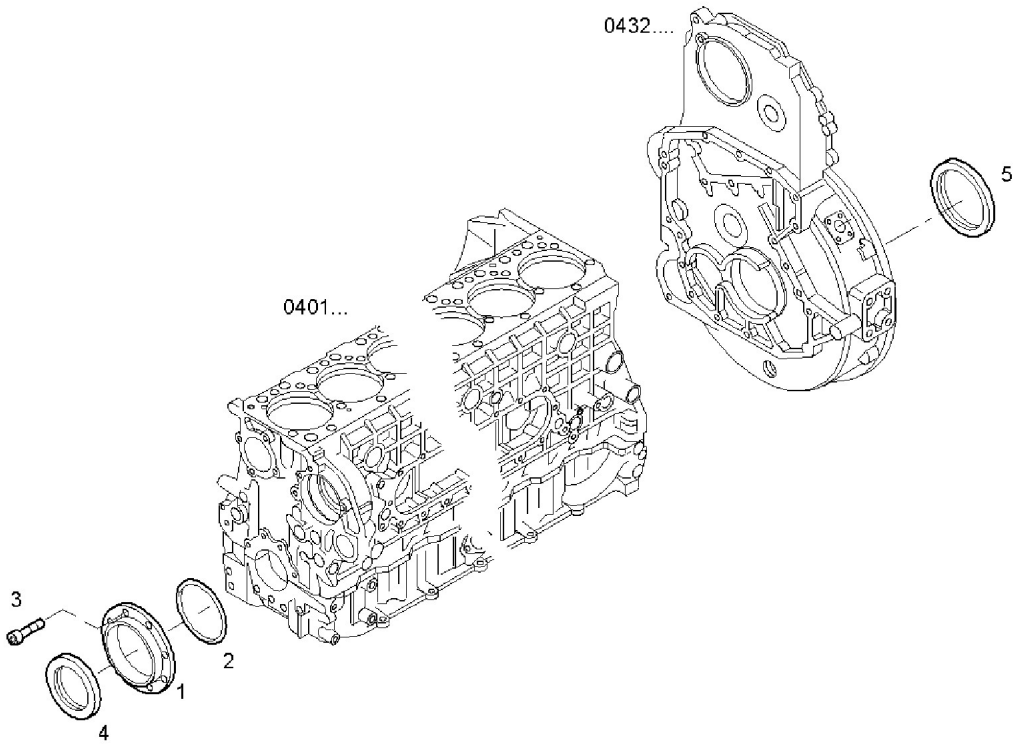


| Item | Part number | Q.ty | Description | See also | Producer Note |
|---|---|---|---|---|---|
| 1 | 500304671 | 1 | FRONT C.CASE COVER | | |
| 2 | 17292581 | 1 | O-RING Ø3,53X136,1 MM | | |
| 3 | 16586225 | 8 | HEXAGON BOLT M8X1,25X16 MM | | |
| 4 | 40102683 | 1 | SHAFT SEAL | | |
| 5 | 40102693 | 1 | SHAFT SEAL | | |


Iveco Motors Spare Parts Catalog - Copyright © 2002-2006 Iveco Motors

| ENGINE BREATHERS | 0450.174 |
|---|---|

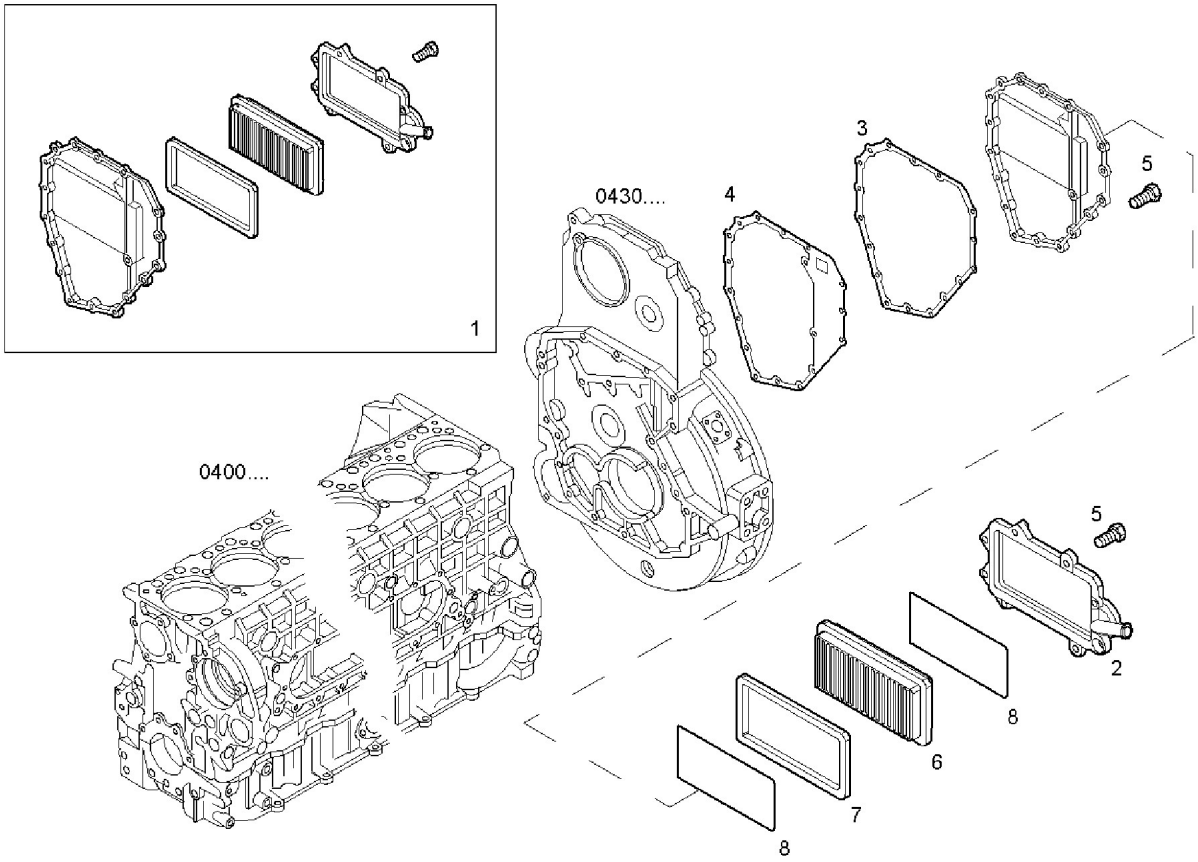


| Item | Part number | Q.ty | Description | See also | Producer Note |
|---|---|---|---|---|---|
| 1 | 504212079 | 1 | COVER | | |
| 2 | 500361556 | 1 | COVER | | |
| 3 | 500382999 | 1 | FLAT ENGINE GKT | | |
| 4 | 500383189 | 1 | FLAT ENGINE GKT | | |
| 5 | 500383042 | 25 | CYLIND-HEAD SCREW M6 | | |
| 6 | 504209107 | 1 | FILTER | | |
| 7 | 500398649 | 1 | GASKET | | |
| 8 | 500383043 | 2 | GASKET | | |


Iveco Motors Spare Parts Catalog - Copyright © 2002-2006 Iveco Motors

| CYL.HEAD GASKET | 0604.001 |
|---|---|

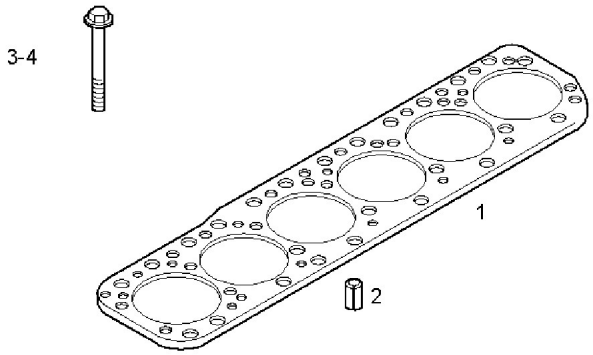


| Item | Part number | Q.ty | Description | See also | Producer Note |
|---|---|---|---|---|---|
| 1 | 504007514 | 1 | CYL.HEAD GASKET | | |
| 2 | 17275510 | 2 | DOWEL PIN Ø10 MM | | |
| 3 | 98495528 | 6 | HEXAGON BOLT | | |
| 4 | 504108192 | 20 | HEXAGON BOLT | | |


Iveco Motors Spare Parts Catalog - Copyright © 2002-2006 Iveco Motors

CYLINDER HEAD | 0610.005

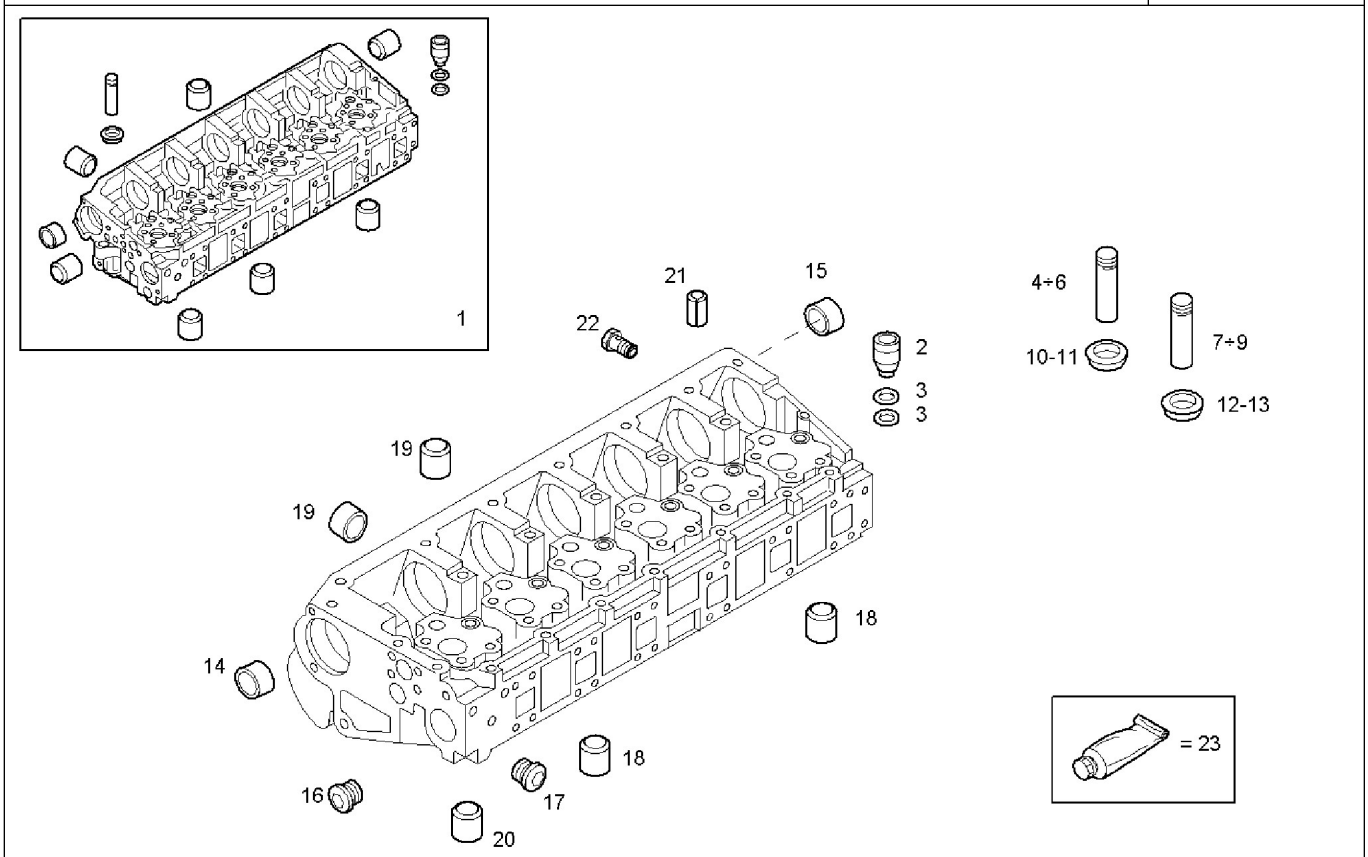


| Item | Part number | Q.ty | Description | See also | Producer Note |
|---|---|---|---|---|---|
| 1 | 504021866 | 1 | CYLINDER HEAD ASSY | | |
| 2 | 99476929 | 6 | NOZZLE HOLDER SEAT | | |
| 3 | 17279081 | 12 | O-RING Ø26,7 MM SP=1,7 MM | | |
| 4 | 500390993 | 12 | VALVE GUIDE INTAKE | | |
| 5 | 500390864 | 12 | VALVE GUIDE +0,2 INTAKE | | |
| 6 | 500390866 | 12 | VALVE GUIDE +0,4 INTAKE | | |
| 7 | 500390994 | 12 | VALVE GUIDE EXHAUST | | |
| 8 | 500390860 | 12 | VALVE GUIDE +0,2 EXHAUST | | |
| 9 | 500390861 | 12 | VALVE GUIDE +0,4 EXHAUST | | |
| 10 | 99450511 | 12 | VALVE SEAT STD. INTAKE | | |
| 11 | 504020517 | 12 | VALVE SEAT +0.20 INTAKE | | |
| 12 | 99450512 | 12 | VALVE SEAT STD. EXHAUST | | |
| 13 | 504020515 | 12 | VALVE SEAT +0.20 EXHAUST | | |
| 14 | 504078222 | 6 | BUSH | | |
| 15 | 504078223 | 1 | BUSH | | |
| 16 | 504051237 | 3 | THREADED PLUG DIAM=1/4" | | |
| 17 | 99430692 | 1 | THREADED PLUG 1/2" | | |
| 18 | 16991370 | 2 | LOCK PLUG Ø45 MM | | |
| 19 | 16990870 | 13 | LOCK PLUG Ø28 MM | | |
| 20 | 14282170 | 12 | LOCK PLUG Ø20 MM | | |


Iveco Motors Spare Parts Catalog - Copyright © 2002-2006 Iveco Motors

CYLINDER HEAD | 0610.005

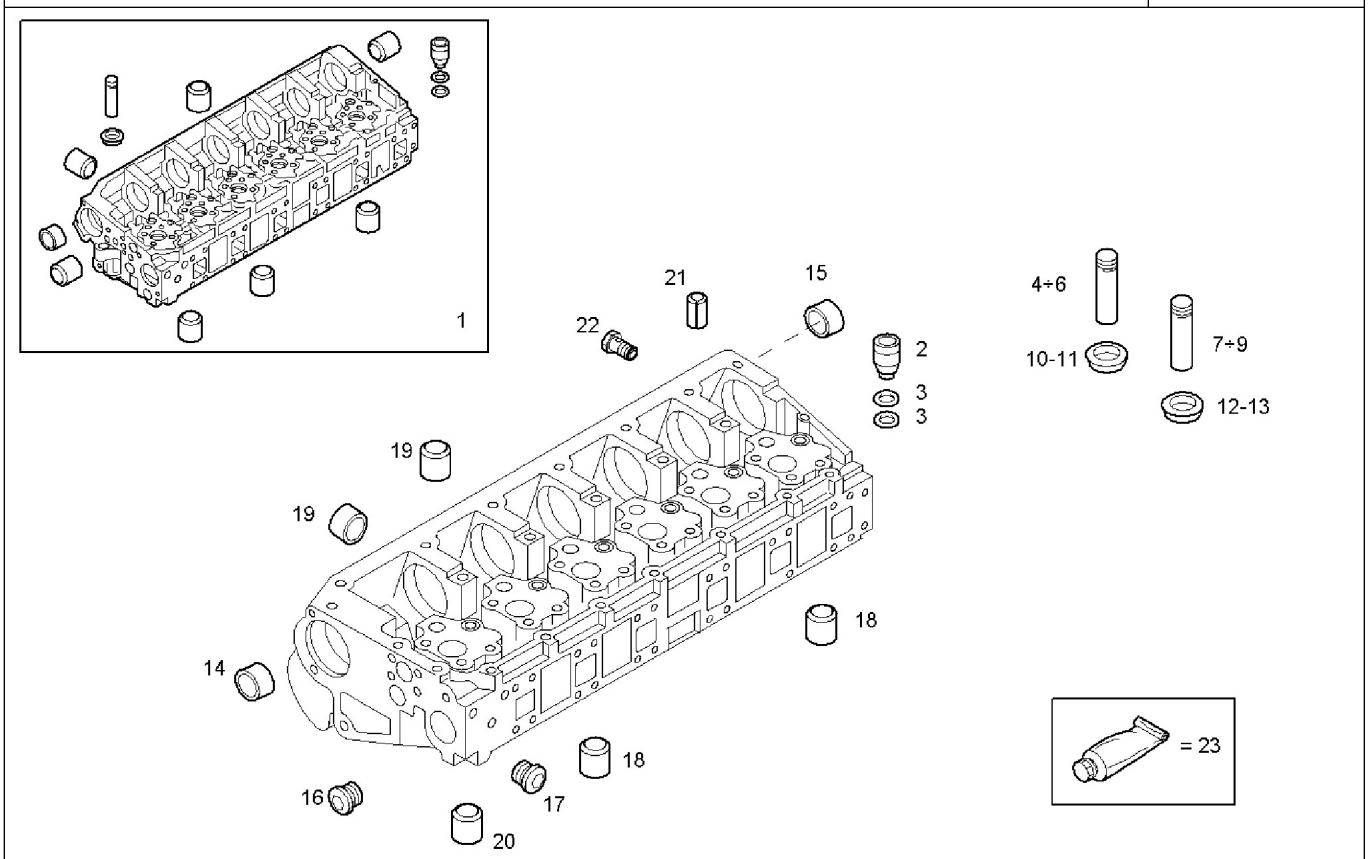


| Item | Part number | Q.ty | Description | See also | Producer Note |
|---|---|---|---|---|---|
| 21 | 17257074 | 1 | DOWEL PIN Ø6X18 MM | | |
| 22 | 504138062 | 2 | PLUG | | |
| 23 | 2992695 | 1 | ADHESIVE/STICKER LOCTITE | | |


Iveco Motors Spare Parts Catalog - Copyright © 2002-2006 Iveco Motors

| ASSEMBLY VALVE | 0613.001 |
|---|---|

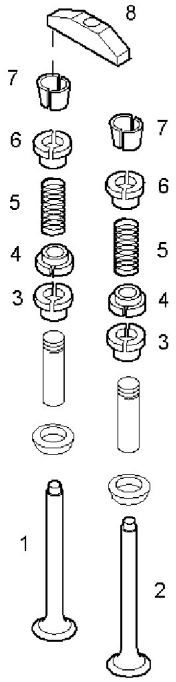


| Item | Part number | Q.ty | Description | See also | Producer Note |
|---|---|---|---|---|---|
| 1 | 500355778 | 12 | INLET VALVE | | |
| 2 | 504080352 | 12 | EXHAUST VALVE | | |
| 3 | 40101874 | 12 | SHAFT SEAL | | |
| 4 | 504107641 | 24 | CAP | | |
| 5 | 504100000 | 24 | SPRING | | |
| 6 | 98473050 | 24 | TAPPET | | |
| 7 | 14196370 | 48 | VALVE CONE Ø9,82 MM | | |
| 8 | 504002605 | 12 | VALVE BRIDGE | | |


Iveco Motors Spare Parts Catalog - Copyright © 2002-2006 Iveco Motors

CYL. HEAD COVERS | 0630.020

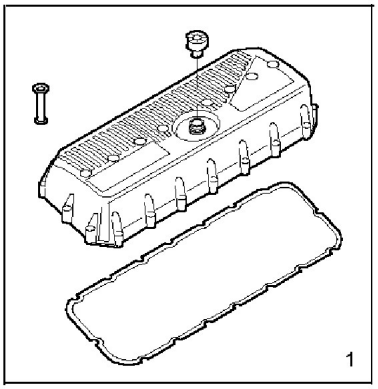


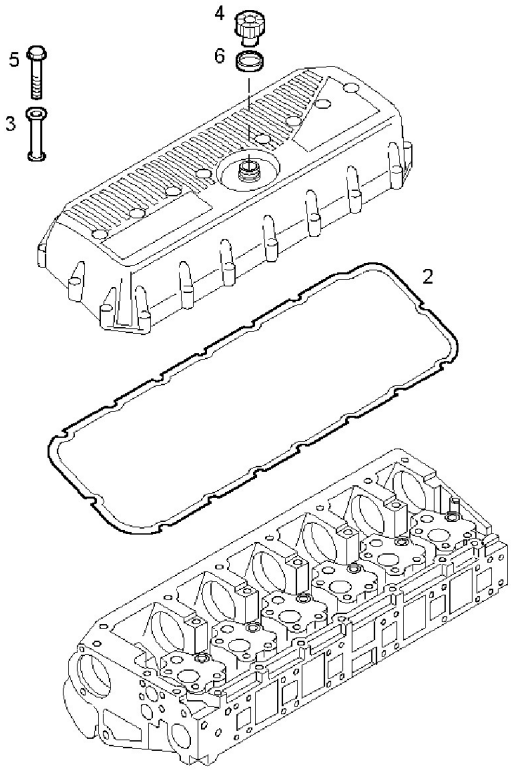


| Item | Part number | Q.ty | Description | See also | Producer Note |
|---|---|---|---|---|---|
| 1 | 500309031 | 1 | CYL. HEAD COVER ASSY | | |
| 2 | 500309014 | 1 | HEAD COVER GASKET | | |
| 3 | 99446693 | 24 | SPACER BUSH | | |
| 4 | 98442027 | 1 | OIL FILLER PLUG ASSY | | |
| 5 | 500309013 | 24 | HEXAGON BOLT | | |
| 6 | 98412146 | 1 | GASKET | | |


Iveco Motors Spare Parts Catalog - Copyright © 2002-2006 Iveco Motors

| ROCKER SHAFT | 0668.002 |
|---|---|

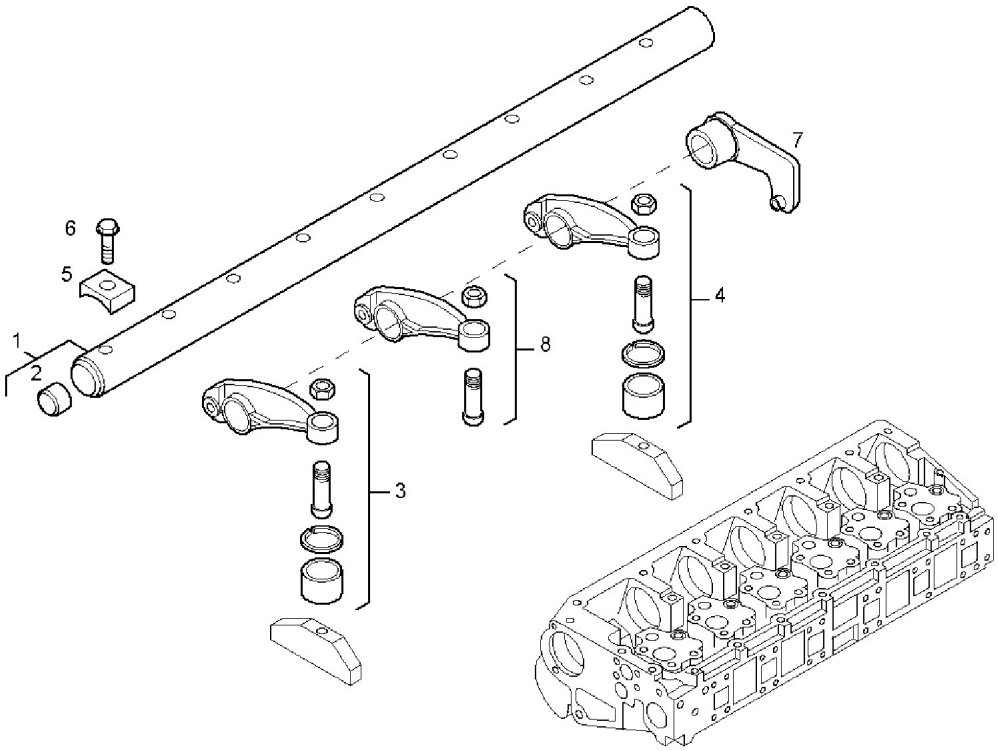


| Item | Part number | Q.ty | Description | See also | Producer Note |
|---|---|---|---|---|---|
| 1 | 99475575 | 1 | ROCKER SHAFT ASSY | | |
| 2 | 16988301 | 2 | LOCK PLUG Ø20 MM | | |
| 3 | 500316734 | 6 | ROCKER ARM ASSY | | |
| 4 | 500316732 | 6 | ROCKER ARM ASSY | | |
| 5 | 500344277 | 7 | SPACING BAR | | |
| 6 | 99475580 | 7 | HEXAGON BOLT | | |
| 7 | 99476802 | 6 | LEVER | | |
| 8 | 500314915 | 6 | ROCKER ARM ASSY | | |


Iveco Motors Spare Parts Catalog - Copyright © 2002-2006 Iveco Motors

| EXHAUST MANIFOLD | 0760.173 |
|---|---|

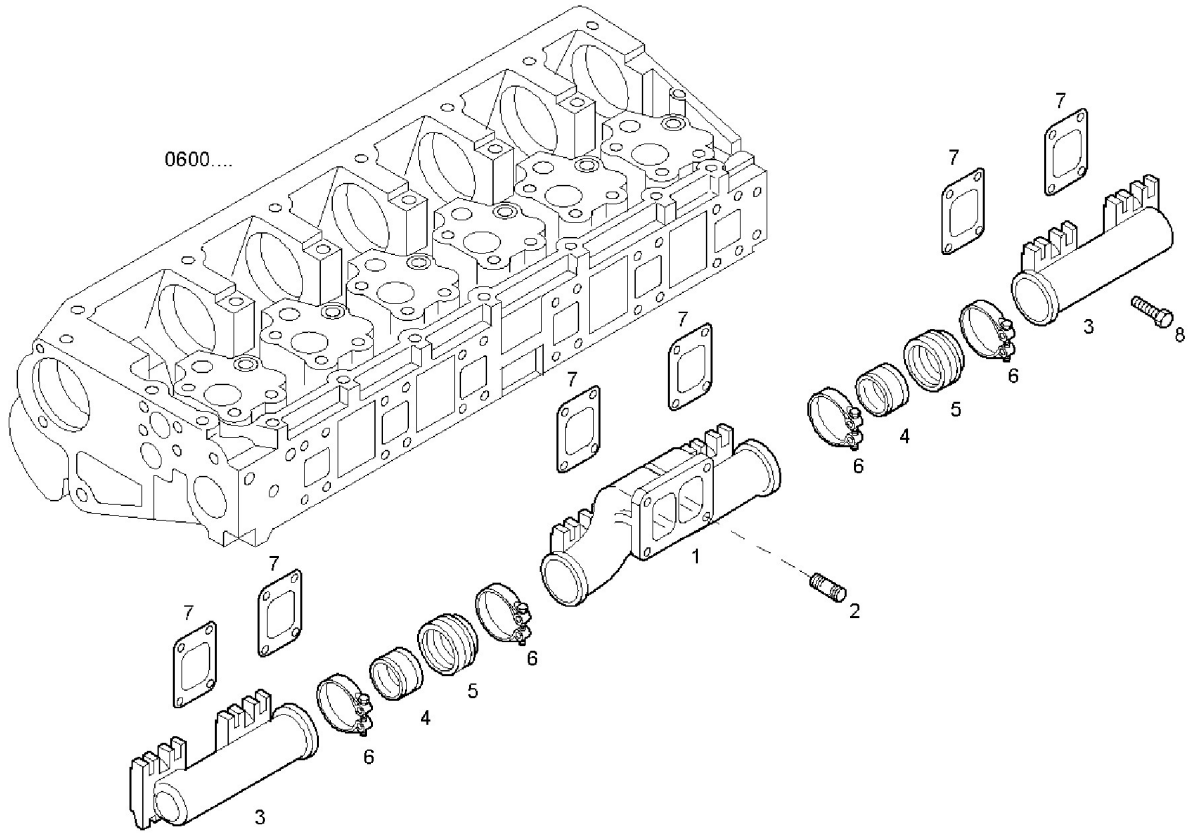


| Item | Part number | Q.ty | Description | See also | Producer Note |
|---|---|---|---|---|---|
| 1 | 504046507 | 1 | EXHAUST MANIFOLD MIDDLE | | |
| 2 | 16731370 | 2 | STUD M10X30 MM | | |
| 3 | 504030852 | 2 | EXHAUST MANIFOLD | | |
| 4 | 99443770 | 2 | RING | | |
| 5 | 99443769 | 2 | RING | | |
| 6 | 500305816 | 4 | CLIP | | |
| 7 | 99443768 | 6 | EXH. MANIFOLD GKT | | |
| 8 | 99443210 | 24 | SCREW M10X1,5X40 MM | | |


Iveco Motors Spare Parts Catalog - Copyright © 2002-2006 Iveco Motors

ENGINE BLOCK ASSY | 0801.001

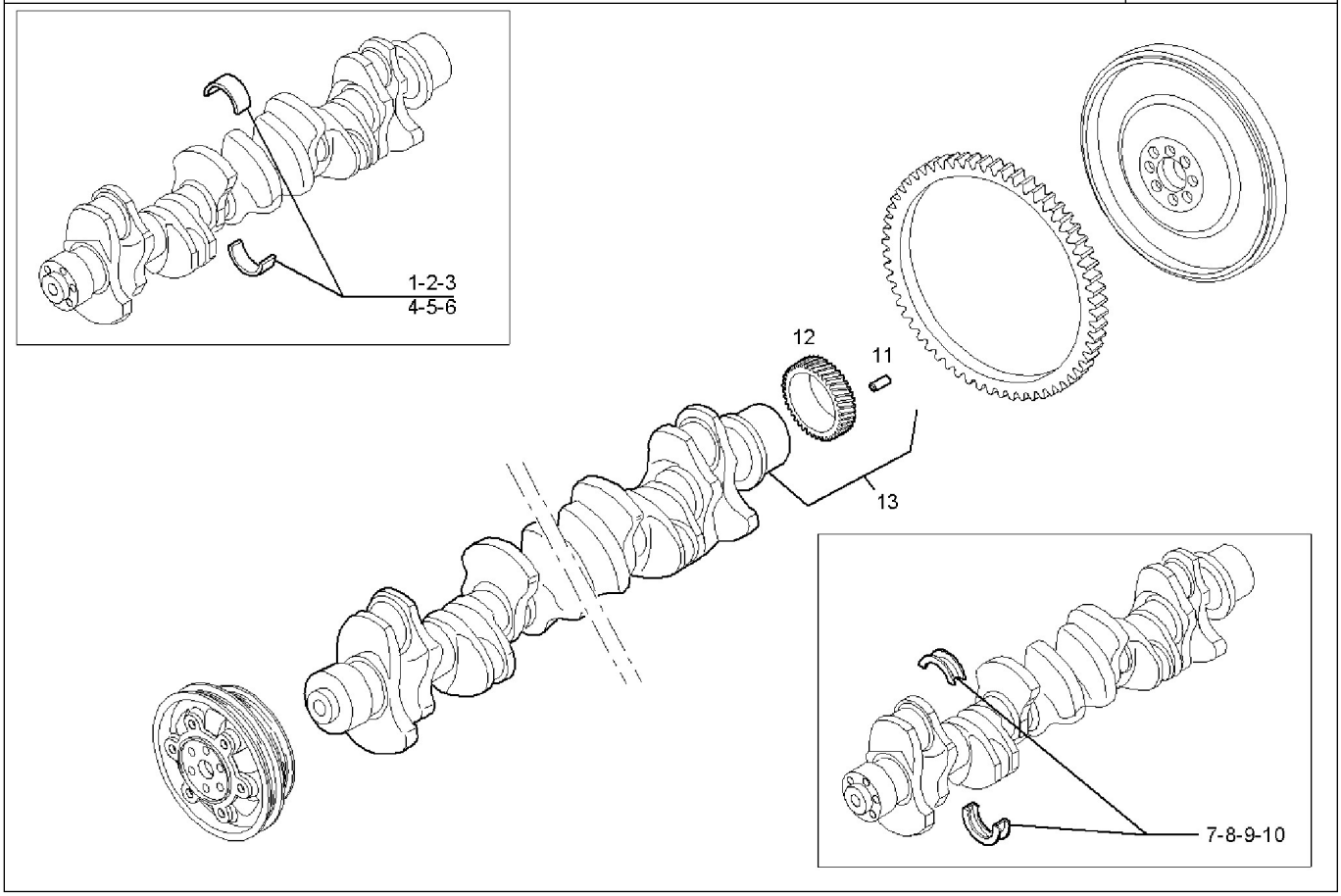


| Item | Part number | Q.ty | Description | See also | Producer Note |
|---|---|---|---|---|---|
| 1 | 2992137 | 6 | MAIN BEARING SET RED | | |
| 2 | 2992138 | 6 | MAIN BEARING SET GREEN | | |
| 3 | 2992139 | 6 | MAIN BEAR.SET -0.127 RED BLACK | | |
| 4 | 2992140 | 6 | MAIN BEAR.SET -0.127 GREEN BLACK | | |
| 5 | 2992141 | 6 | MAIN BEAR.SET -0.2 RED | | |
| 6 | 2992142 | 6 | MAIN BEAR.SET -0.5 RED | | |
| 7 | 2992143 | 1 | MAIN BEARING SET RED | | |
| 8 | 2992144 | 1 | THRUSTRING SET STD GREEN | | |
| 9 | 2992146 | 1 | THRUSTRING SET STD RED | | |
| 10 | 2992145 | 1 | THRUSTRING SET+0.254 RED | | |
| 11 | 17275410 | 1 | DOWEL PIN Ø8 MM | | |
| 12 | 99437423 | 1 | GEAR | | |
| 13 | 99438979 | 1 | CRANK SHAFT ASSY | | |


Iveco Motors Spare Parts Catalog - Copyright © 2002-2006 Iveco Motors

| CONNECTING ROD | 0810.157 |
|---|---|

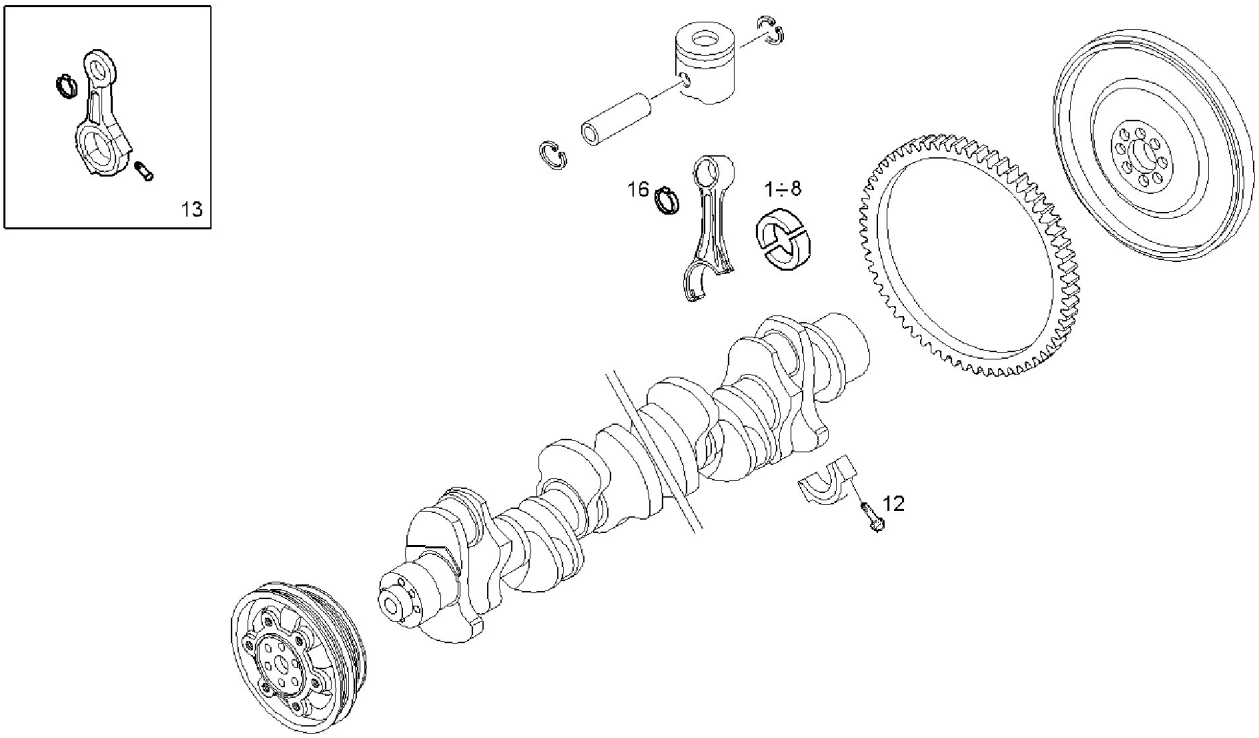


| Item | Part number | Q.ty | Description | See also | Producer Note |
|---|---|---|---|---|---|
| 1 | 2992158 | 6 | CON.ROD BEAR STD. RED | | |
| 2 | 2992159 | 6 | CON.ROD BEAR STD. GREEN | | |
| 3 | 2992160 | 6 | CON.ROD BEAR-0,127 RED BLACK | | |
| 4 | 2992161 | 6 | CON.ROD BEAR-0,127 GREEN BLACK | | |
| 5 | 2992162 | 6 | CON.ROD BEAR-0,254 RED | | |
| 6 | 2992163 | 6 | CON.ROD BEAR-0,254 GREEN | | |
| 7 | 2992164 | 6 | CON.ROD BEAR-0,508 RED | | |
| 8 | 2992165 | 6 | CON.ROD BEAR-0,508 GREEN | | |
| 12 | 99431774 | 12 | BIG-END BOLT | | |
| 13 | 504028545 | 6 | CONN.ROD ASSY. ASSY | | |
| 16 | 99460197 | 6 | BIG-END BUSH | | |


Iveco Motors Spare Parts Catalog - Copyright © 2002-2006 Iveco Motors

| PISTON ASSY - PISTON RINGS - PISTON PIN | 0820.195 |
|---|---|

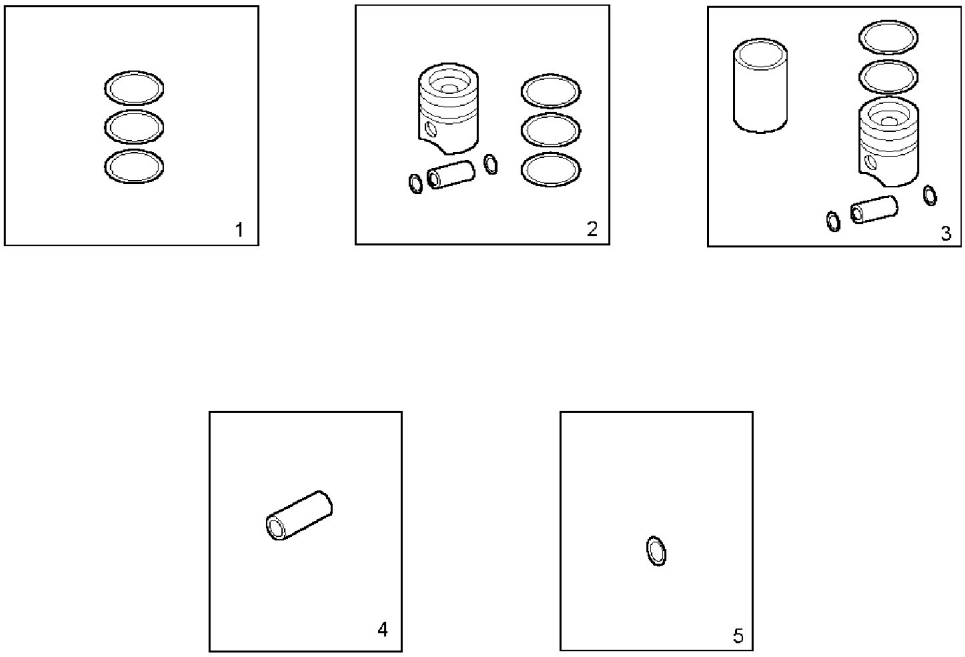


| Item | Part number | Q.ty | Description | See also | Producer Note |
|---|---|---|---|---|---|
| 1 | 2992157 | 6 | PISTONRING SET STD | | |
| 2 | 2992257 | 6 | PISTON ASSY | | |
| 3 | 2992258 | 6 | KIT PISTON/CYLIN. | | |
| 4 | 504006110 | 6 | PISTON PIN | | |
| 5 | 16877276 | 12 | CIRCLIP dia 54X2 | | |


Iveco Motors Spare Parts Catalog - Copyright © 2002-2006 Iveco Motors

| ENGINE FLYWHEEL | 0830.270 |
|---|---|

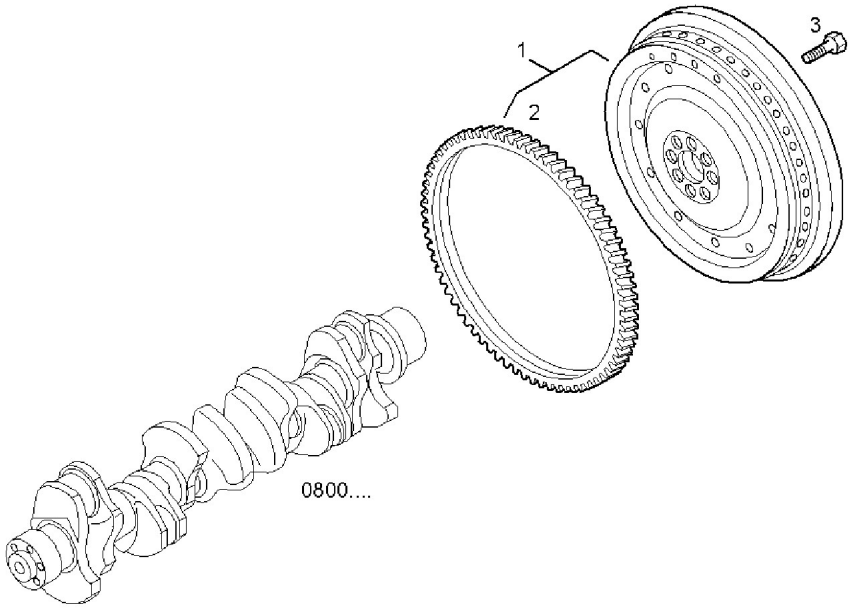


| Item | Part number | Q.ty | Description | See also | Producer Note |
|---|---|---|---|---|---|
| 1 | 500374302 | 1 | FLYWHEEL ASSY | | |
| 2 | 99433386 | 1 | RING GEAR | | |
| 3 | 99430395 | 8 | HEXAGON BOLT | | |


Iveco Motors Spare Parts Catalog - Copyright © 2002-2006 Iveco Motors

| DRIVING PULLEY | 0843.005 |
|---|---|

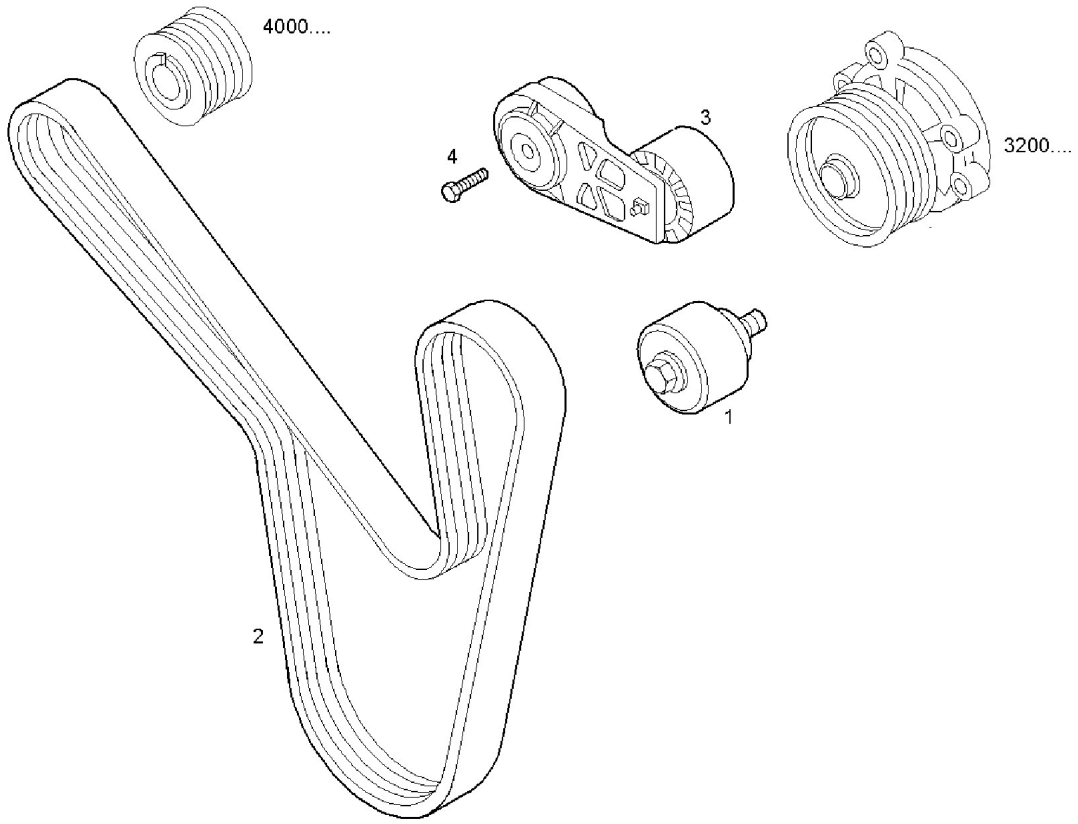


| Item | Part number | Q.ty | Description | See also | Producer Note |
|---|---|---|---|---|---|
| 1 | 504006261 | 1 | BELT TENSIONER | | |
| 2 | 500341810 | 1 | V-BELT | | |
| 3 | 504046191 | 1 | BELT TENSIONER | | |
| 4 | 16676834 | 1 | HEXAGON BOLT M10X70 MM | | |


Iveco Motors Spare Parts Catalog - Copyright © 2002-2006 Iveco Motors

| GEAR DRIVE | 1000.102 |
|---|---|

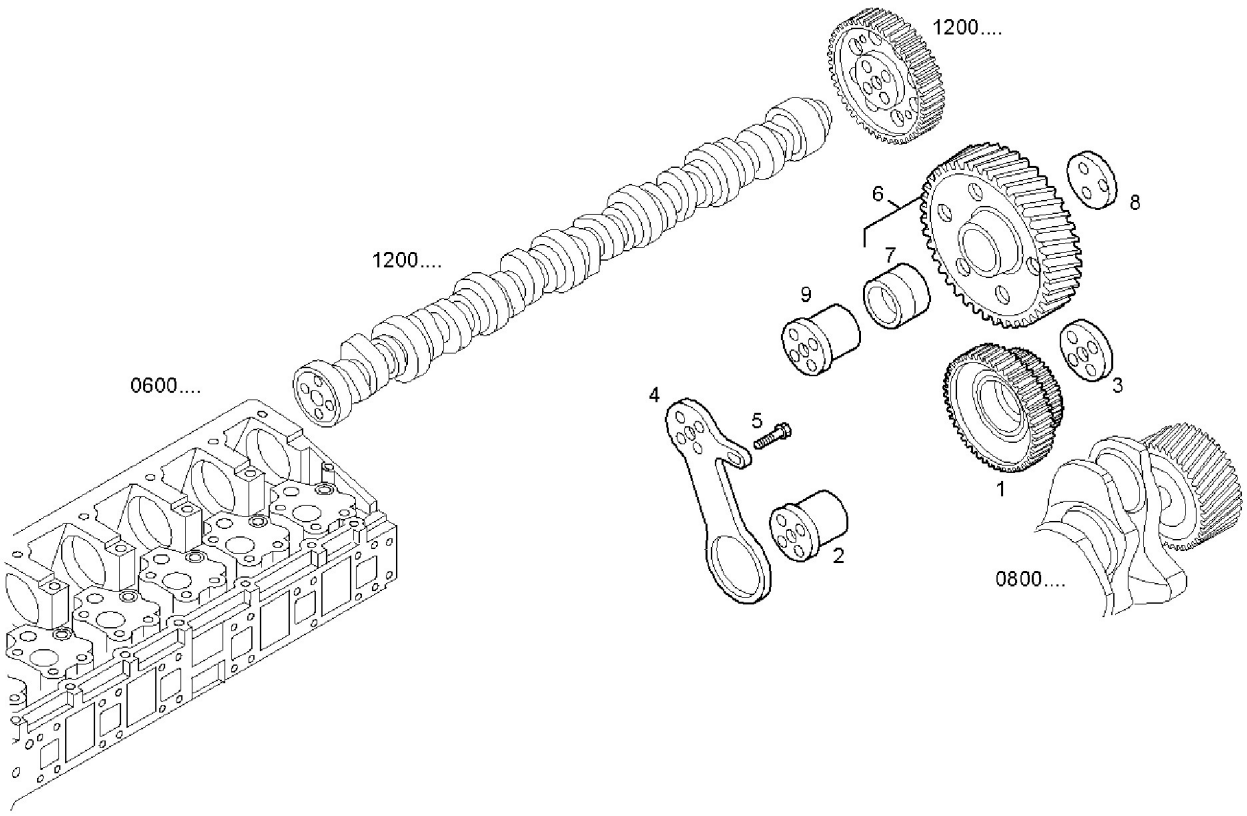


| Item | Part number | Q.ty | Description | See also | Producer Note |
|---|---|---|---|---|---|
| 1 | 500339012 | 1 | CAMSHAFT PINION ASSY | | |
| 2 | 500304182 | 1 | FLANGED HUB | | |
| 3 | 500305012 | 1 | STOP WASHER | | |
| 4 | 500304181 | 1 | RETAINER | | |
| 5 | 16586224 | 1 | HEXAGON BOLT M8X1,25X16 MM | | |
| 6 | 500304189 | 1 | CAMSHAFT PINION ASSY | | |
| 7 | 500304204 | 1 | DOWEL BUSH | | |
| 8 | 500305013 | 1 | STOP WASHER | | |
| 9 | 500304187 | 1 | PIN | | |


Iveco Motors Spare Parts Catalog - Copyright © 2002-2006 Iveco Motors

TIMING PARTS | 1250.001

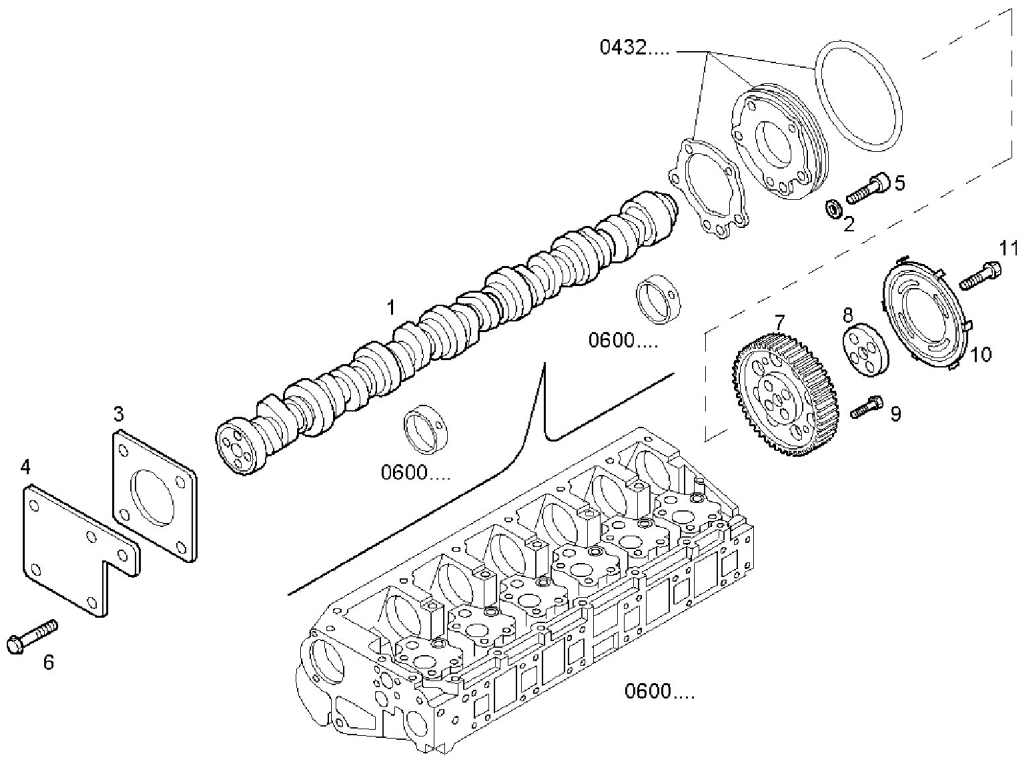


| Item | Part number | Q.ty | Description | See also | Producer Note |
|---|---|---|---|---|---|
| 1 | 504004781 | 1 | CAMSHAFT | | |
| 2 | 17094824 | 5 | WASHER Ø8,40X15 MM | | |
| 3 | 500370033 | 1 | FLAT ENGINE GKT | | |
| 4 | 500370032 | 1 | COVER | | |
| 5 | 16690624 | 5 | CYLIND-HEAD SCREW M8X25 MM | | |
| 6 | 16587125 | 4 | HEXAGON BOLT M10X25 MM | | |
| 7 | 99450035 | 1 | CAMSHAFT PINION | | |
| 8 | 98496024 | 1 | SPACING BAR | | |
| 9 | 99431774 | 4 | BIG-END BOLT | | |
| 10 | 500336396 | 1 | PLATE | | |
| 11 | 500397562 | 4 | HEXAGON BOLT | | |


Iveco Motors Spare Parts Catalog - Copyright © 2002-2006 Iveco Motors

| INJECTORS | 1480.006 |
|---|---|

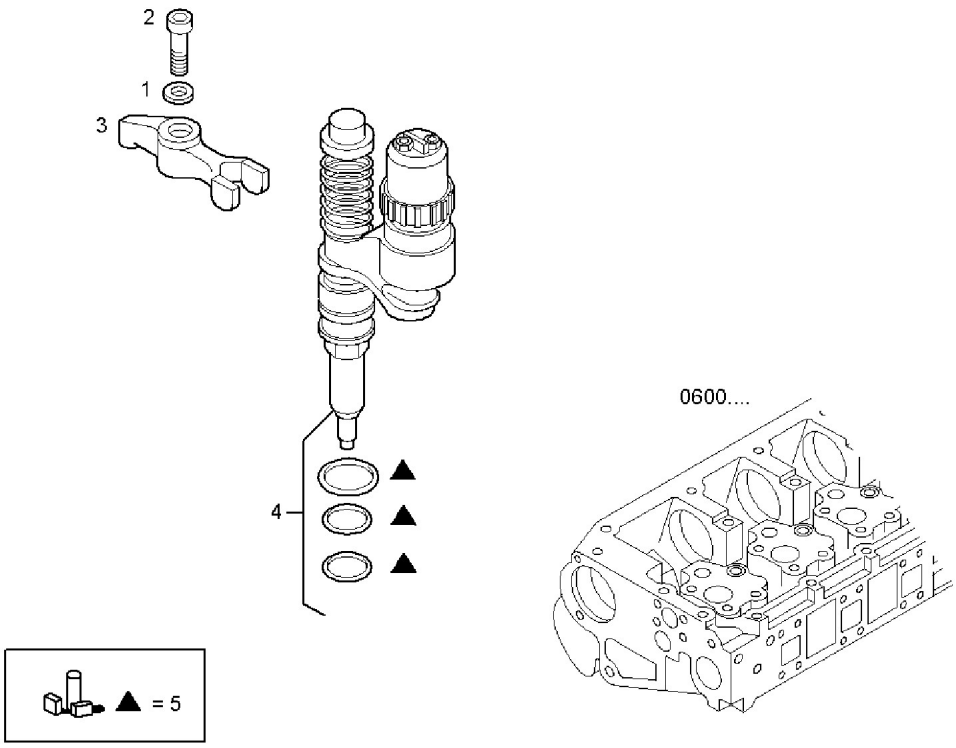


| Item | Part number | Q.ty | Description | See also | Producer Note |
|---|---|---|---|---|---|
| 1 | 99435007 | 6 | WASHER | | |
| 2 | 16707734 | 6 | CYLIND-HEAD SCREW M8X50 MM | | |
| 3 | 99435006 | 6 | FASTENING BRACKET | | |
| 4 | 500331074 | 6 | NOZZLE PUMP | | |
| 5 | 500379769 | 6 | REPAIR KIT | | |


Iveco Motors Spare Parts Catalog - Copyright © 2002-2006 Iveco Motors

| ELECTRONIC CONTROL UNIT | 1700.027 |
|---|---|

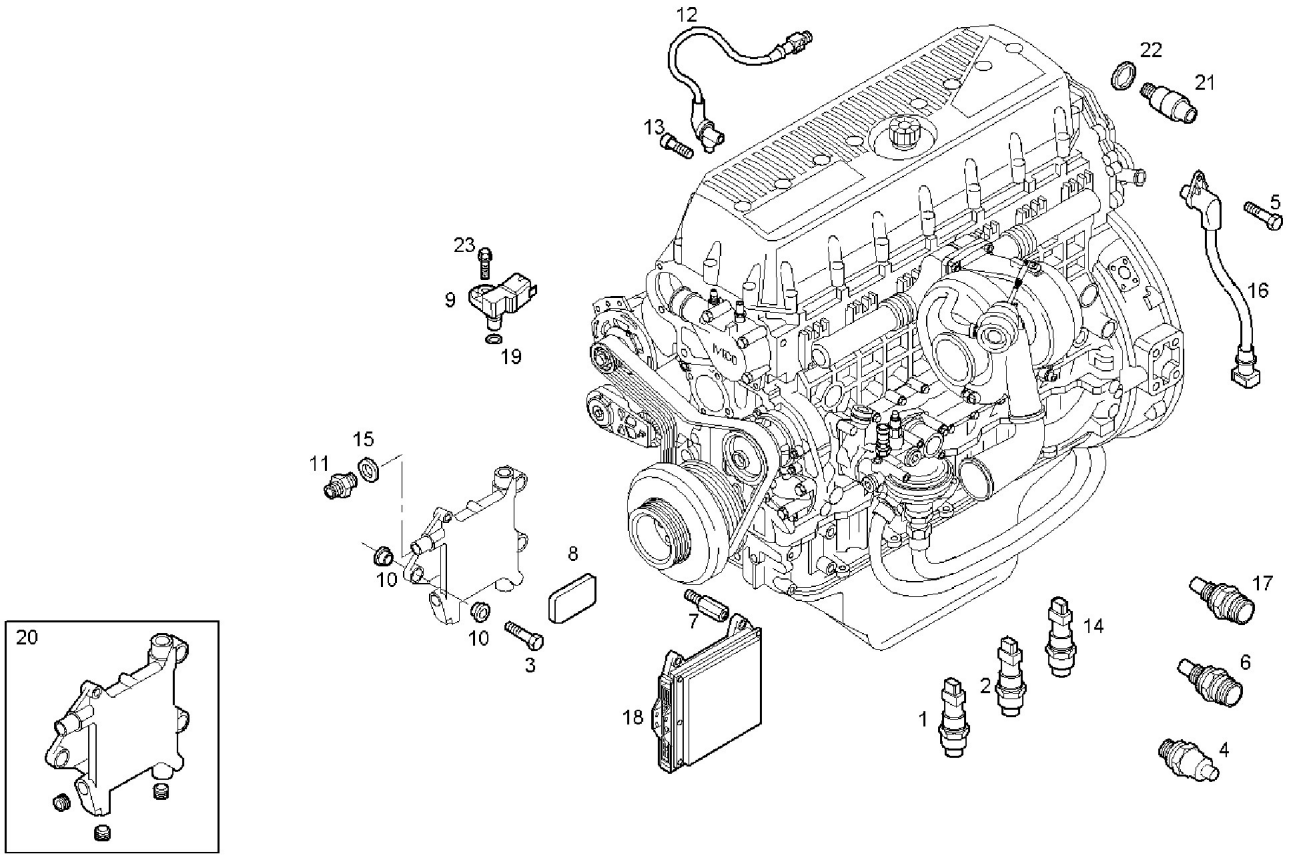


| Item | Part number | Q.ty | Description | See also | Producer Note |
|---|---|---|---|---|---|
| 1 | 500386057 | 1 | TEMP. TRANSMITTER | | |
| 2 | 500351609 | 1 | SENSOR OIL PRESSURE | | |
| 3 | 16586625 | 4 | HEXAGON BOLT M8X35 MM | | |
| 4 | 504084761 | 1 | TRANSMITTER | | |
| 5 | 16688925 | 2 | CYLIND-HEAD SCREW M6X10 | | |
| 6 | 500346074 | 1 | TRANSMITTER Pressure | | |
| 7 | 99475194 | 1 | SPACING BAR | | |
| 8 | 99474206 | 1 | RUBBER PLUG | | |
| 9 | 504073323 | 1 | SENSOR AIR PRESS. & TEMPER. | | |
| 10 | 98498817 | 6 | DOWEL | | |
| 11 | 41031569 | 3 | THREADED UNION M16X1,5 - M18X1,5 MM" | | |
| 12 | 99450797 | 1 | SENSOR albero a camme | | |
| 13 | 16586825 | 3 | HEXAGON BOLT M8X1.25X45 MM | | |
| 14 | 98442879 | 1 | PRESSURE SWITCH SIPEA | | |
| 15 | 99489019 | 3 | WASHER Ø16X24 MM SP=1,5 MM | | |
| 16 | 500306772 | 1 | SENSOR | | |
| 17 | 500382599 | 2 | TEMP. TRANSMITTER PRESS. & TEMPER. | | |
| 18 | 8093995 | 1 | ELECTR.CONTR.UNIT E.C.U. | | |
| 19 | 42546555 | 1 | O-RING | | |
| 20 | 500371989 | 1 | SUPPORT ASSY | | |


Iveco Motors Spare Parts Catalog - Copyright © 2002-2006 Iveco Motors

| ELECTRONIC CONTROL UNIT | 1700.027 |
|---|---|

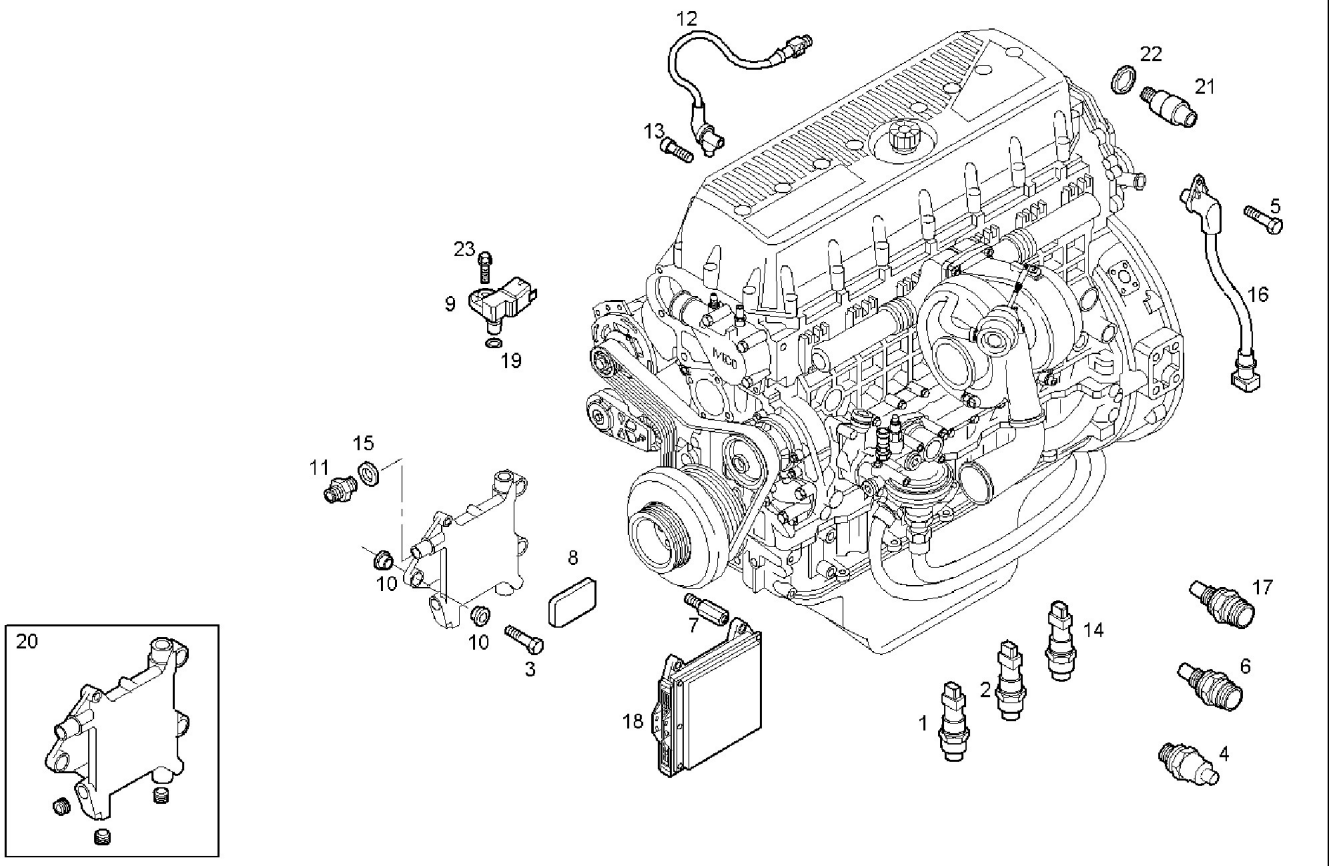


| Item | Part number | Q.ty | Description | See also | Producer Note |
|---|---|---|---|---|---|
| 21 | 500346371 | 1 | CHOCKED FILTER INDIC. FILTRO BLOW-BY | | |
| 22 | 99489018 | 1 | SEAL GASKET Ø14X22 MM SP=1,5 MM | | |
| 23 | 16597225 | 2 | HEXAGON BOLT M6X18 MM | | |


Iveco Motors Spare Parts Catalog - Copyright © 2002-2006 Iveco Motors

| FUEL PUMP | 2010.053 |
|---|---|

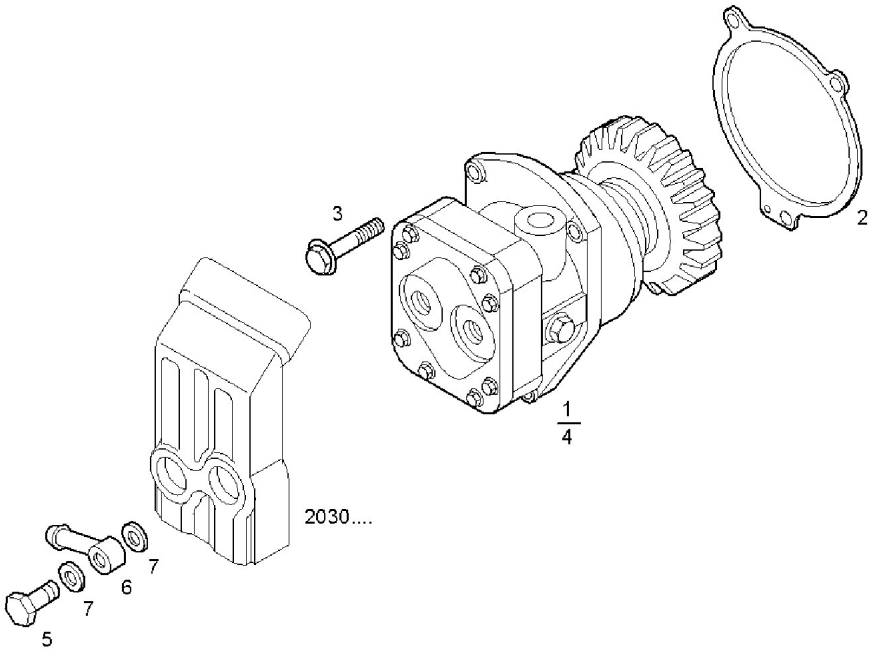


| Item | Part number | Q.ty | Description | See also | Producer Note |
|---|---|---|---|---|---|
| 1 | 504040201 | 1 | FUEL PUMP [UP TO # 17370] | | |
| 2 | 504045787 | 1 | FLAT ENGINE GKT | | |
| 3 | 16673735 | 3 | HEXAGON BOLT M8X25 MM | | |
| 4 | 504066263 | 1 | FUEL PUMP [FROM # 17371] | | |
| 5 | 4864083 | 1 | SCREW CONNECTOR M14X1,5X30 MM | | |
| 6 | 98404882 | 1 | PIPE SOCKET Ø8 MM | | |
| 7 | 98474308 | 2 | SEAL GASKET Ø14X22 MM | | |


Iveco Motors Spare Parts Catalog - Copyright © 2002-2006 Iveco Motors

FUEL LINES | 2030.226

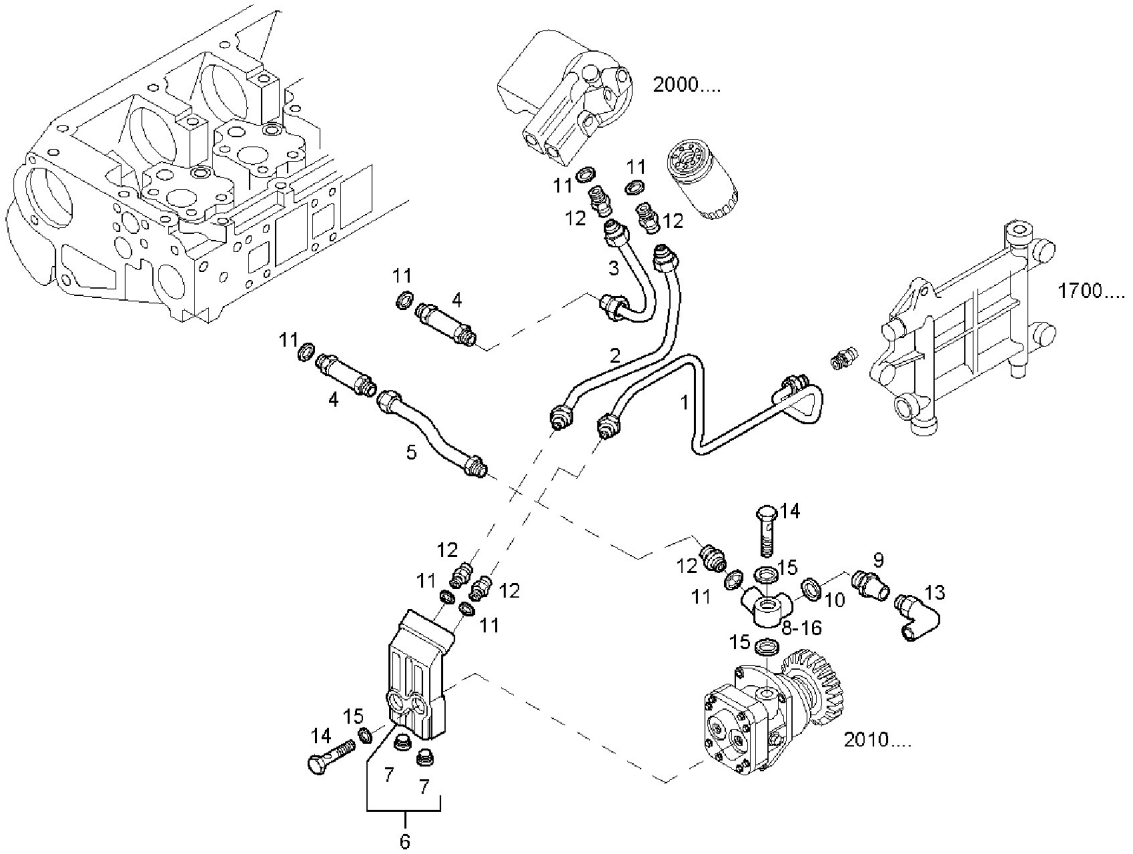


| Item | Part number | Q.ty | Description | See also | Producer Note |
|---|---|---|---|---|---|
| 1 | 504052787 | 1 | FUEL LINE | | |
| 2 | 500352450 | 1 | FUEL LINE | | |
| 3 | 500352453 | 1 | FUEL LINE | | |
| 4 | 500310076 | 3 | PIPE SOCKET | | |
| 5 | 500352447 | 1 | FUEL LINE | | |
| 6 | 500314313 | 1 | PIPE SOCKET ASSY | | |
| 7 | 504051237 | 2 | THREADED PLUG DIAM=1/4" | | |
| 8 | 500348306 | 1 | PIPE SOCKET [FROM # 38209] | | |
| 9 | 500328251 | 1 | VALVE 0,2-0,3 BAR | | |
| 10 | 99489018 | 1 | SEAL GASKET Ø14X22 MM SP=1,5 MM | | |
| 11 | 99489019 | 10 | WASHER Ø16X24 MM SP=1,5 MM | | |
| 12 | 41031569 | 8 | THREADED UNION M16X1,5 - M18X1,5 MM" | | |
| 13 | 500350162 | 1 | ELBOW COUPLING | | |
| 14 | 4864084 | 3 | BANJO BOLT M16X1,5 | | |
| 15 | 98474309 | 6 | WASHER Ø16X24 MM SP=1,9 MM | | |
| 16 | 504040951 | 1 | PIPE SOCKET [UP TO # 38208] | | |


Iveco Motors Spare Parts Catalog - Copyright © 2002-2006 Iveco Motors

# FUEL PREFILTER

2090.002

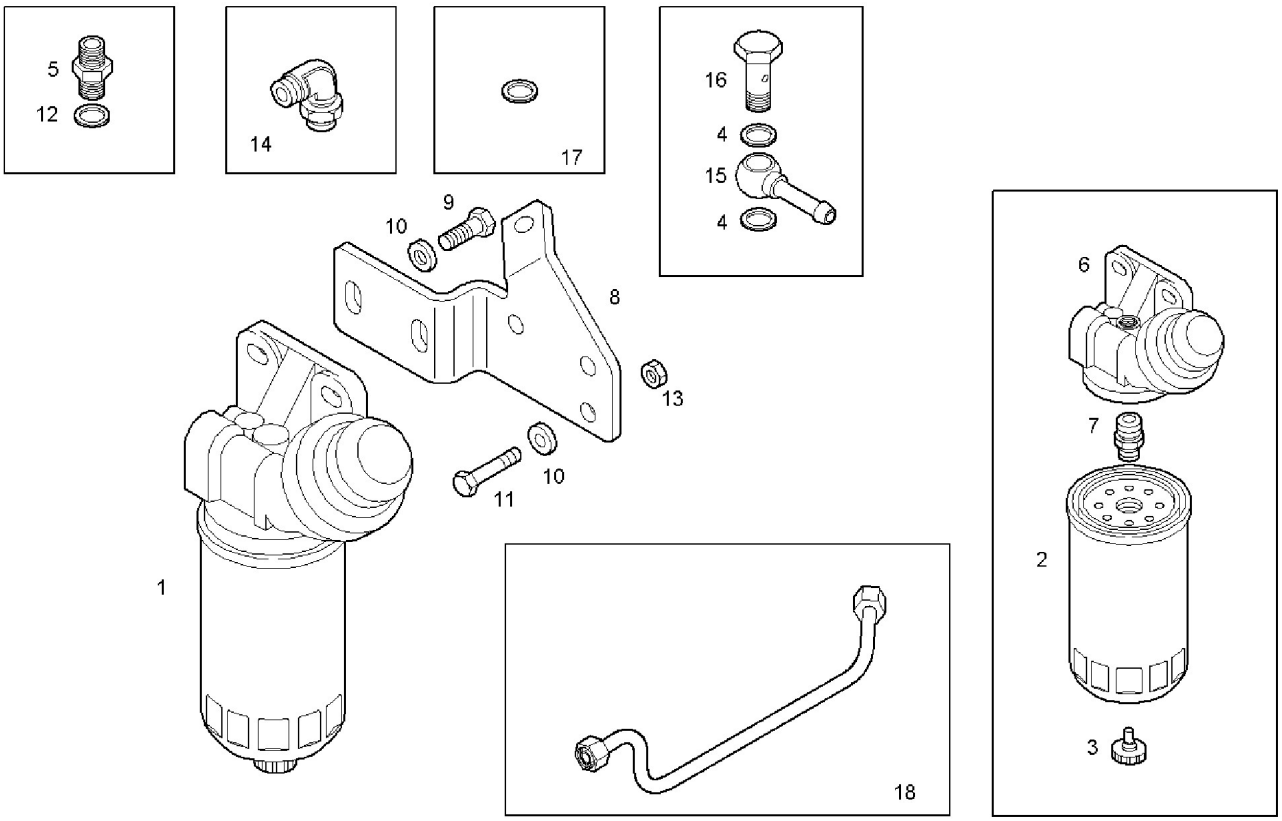


| Item | Part number | Q.ty | Description | See also | Producer Note |
|---|---|---|---|---|---|
| 1 | 504057743 | 1 | PREFILTER ASSY | | |
| 2 | 2992662 | 1 | FUEL FILTER ELEM. | | |
| 3 | 42540203 | 1 | SENSOR | | |
| 4 | 99489018 | 2 | SEAL GASKET Ø14X22 MM SP=1,5 MM | | |
| 5 | 8014143 | 1 | PIPE SOCKET M14X1,5 | | |
| 6 | 42545573 | 1 | FUEL FILT.SUPPORT | | |
| 7 | 42545574 | 1 | THREADED UNION | | |
| 8 | 8040765 | 1 | SUPPORT | | |
| 9 | 16607524 | 2 | HEXAGON BOLT M10X1,5X20 MM (8.8) | | |
| 10 | 17090174 | 5 | SPRING WASHER Ø10X20 MM | | |
| 11 | 16609425 | 3 | HEXAGON BOLT | | |
| 12 | 16507614 | 2 | WASHER | | |
| 13 | 17038131 | 3 | HEXAGON NUT M10 (10) | | |
| 14 | 16504114 | 1 | ELBOW COUPLING M18X1,5 | | |
| 15 | 98404882 | 1 | PIPE SOCKET Ø8 MM | | |
| 16 | 4864083 | 1 | SCREW CONNECTOR M14X1,5X30 MM | | |
| 17 | 17089474 | 1 | SPRING WASHER Ø8X16 MM SP=1,4 MM | | |
| 18 | 8041165 | 1 | FUEL LINE | | |


Iveco Motors Spare Parts Catalog - Copyright © 2002-2006 Iveco Motors

| TURBOCHARGER | 2400.232 |
|---|---|

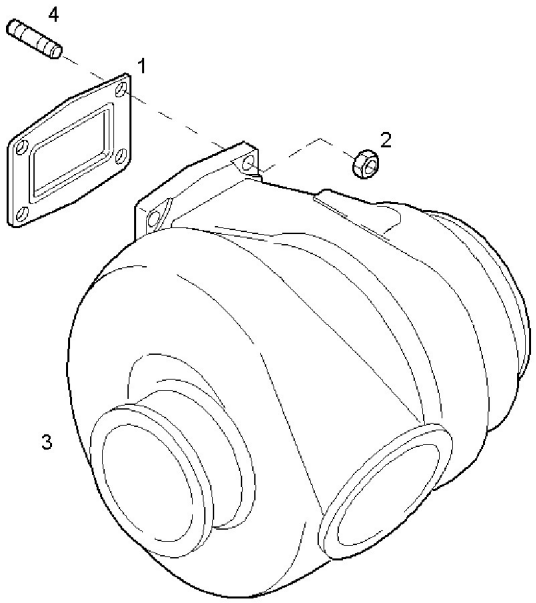


| Item | Part number | Q.ty | Description | See also | Producer Note |
|---|---|---|---|---|---|
| 1 | 98453300 | 1 | FLAT ENGINE GKT | | |
| 2 | 500300795 | 4 | HEXAGON NUT M10X1,5 | | |
| 3 | 504115756 | 1 | TURBOCHARGER | | |
| 4 | 16731370 | 2 | STUD M10X30 MM | | |


Iveco Motors Spare Parts Catalog - Copyright © 2002-2006 Iveco Motors

| SUPERCHARGING LINES | 2420.230 |
|---|---|

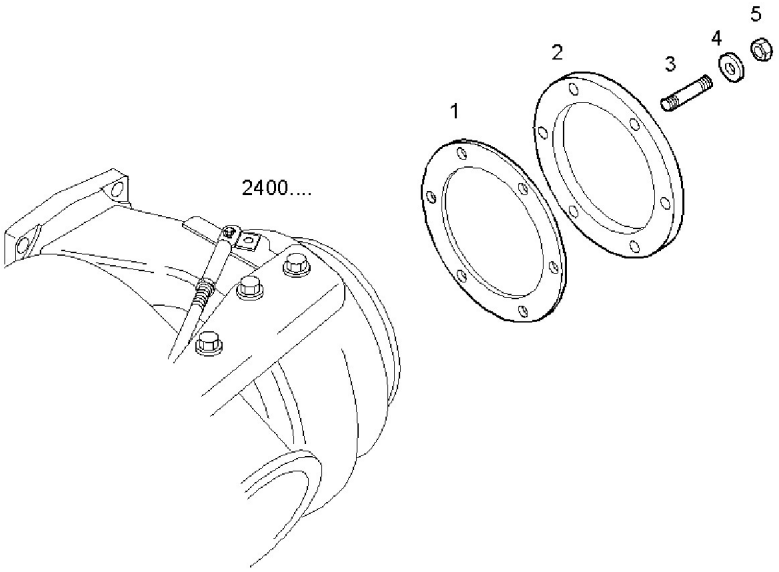


| Item | Part number | Q.ty | Description | See also | Producer Note |
|---|---|---|---|---|---|
| 1 | 8041171 | 1 | FLAT ENGINE GKT | | |
| 2 | 8040930 | 1 | FLANGE | | |
| 3 | 504014044 | 6 | STUD | | |
| 4 | 17089474 | 6 | SPRING WASHER Ø8X16 MM SP=1,4 MM | | |
| 5 | 17037925 | 6 | HEXAGON NUT M8X1,25 | | |


Iveco Motors Spare Parts Catalog - Copyright © 2002-2006 Iveco Motors

| OIL GAUGE | 2714.005 |
|---|---|

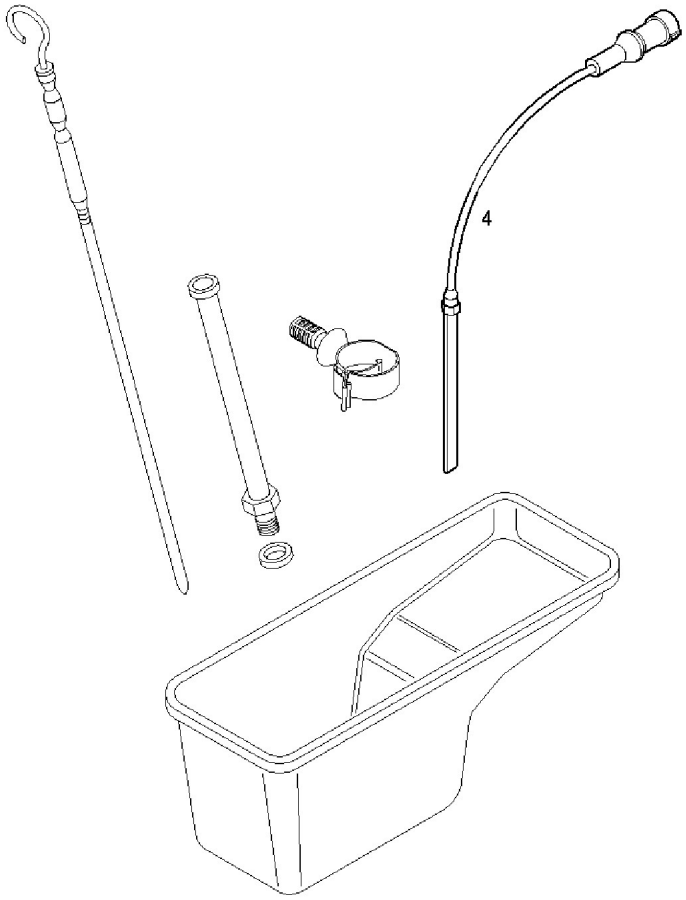


| Item | Part number | Q.ty | Description | See also | Producer Note |
|---|---|---|---|---|---|
| 4 | 504020321 | 1 | OIL LEVEL SENSOR | | |


Iveco Motors Spare Parts Catalog - Copyright © 2002-2006 Iveco Motors

| OIL PUMP | 3001.000 |
|---|---|

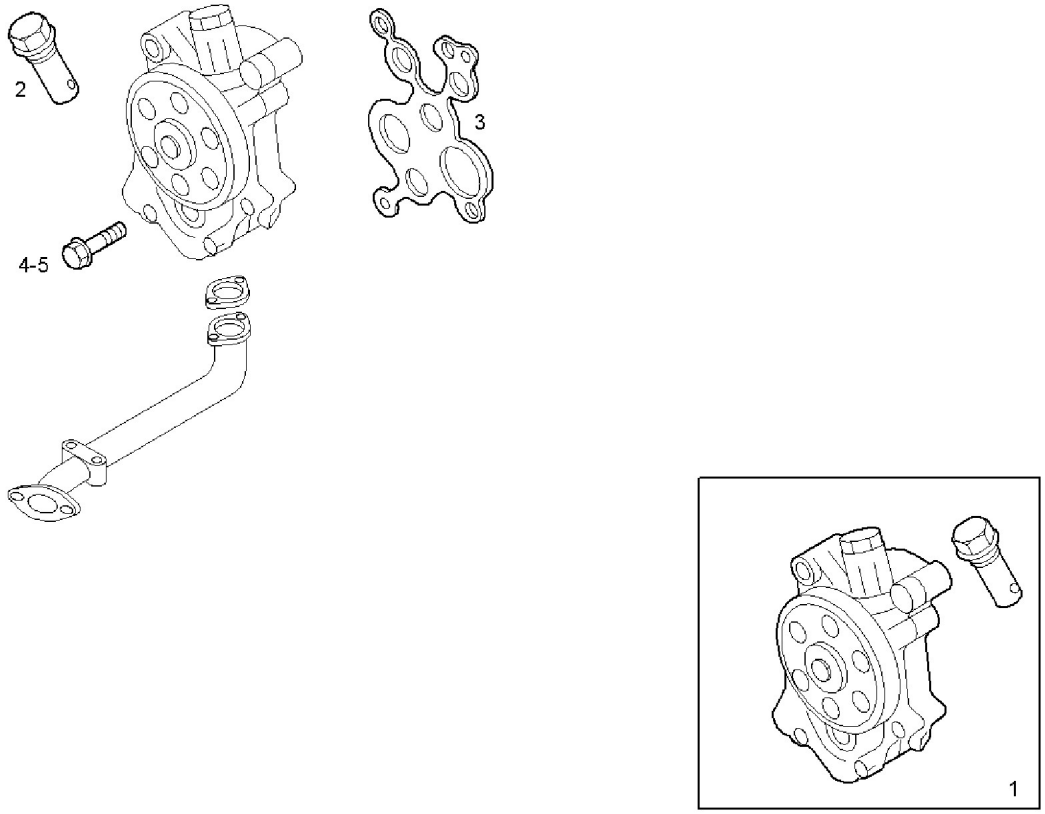


| Item | Part number | Q.ty | Description | See also | Producer Note |
|---|---|---|---|---|---|
| 1 | 99452340 | 1 | LUBE OIL PUMP ASSY | | |
| 2 | 500359679 | 1 | OIL PUMP VALVE | | |
| 3 | 99452273 | 1 | FLAT ENGINE GKT | | |
| 4 | 16592525 | 3 | HEXAGON BOLT M8X70 MM | | |
| 5 | 16586625 | 1 | HEXAGON BOLT M8X35 MM | | |


Iveco Motors Spare Parts Catalog - Copyright © 2002-2006 Iveco Motors

| LUBE OIL LINES | 3010.209 |
|---|---|

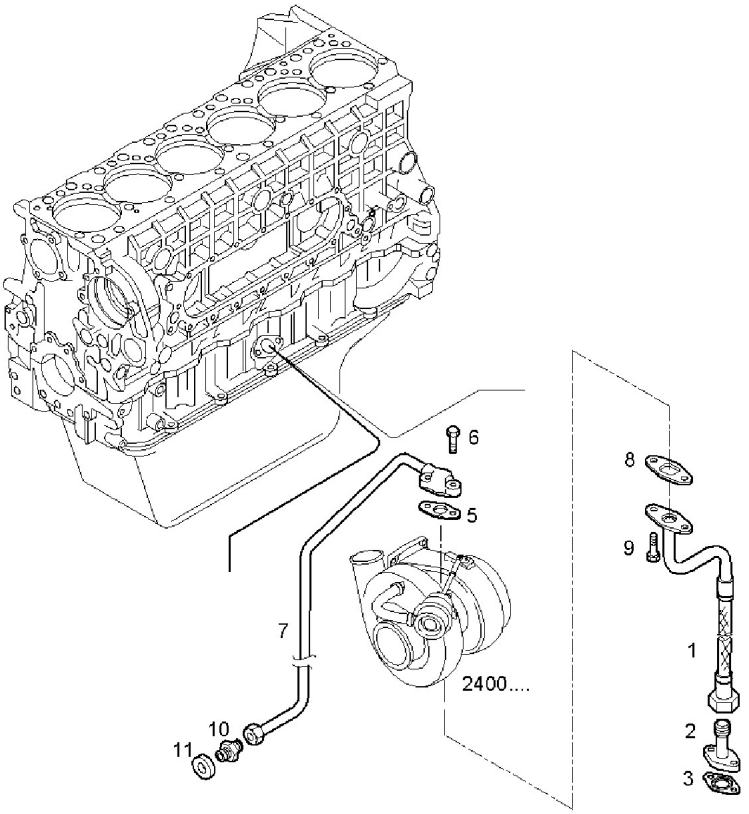


| Item | Part number | Q.ty | Description | See also | Producer Note |
|---|---|---|---|---|---|
| 1 | 504050617 | 1 | OIL LINE | | |
| 2 | 504051637 | 1 | FLANGE | | |
| 3 | 504051638 | 1 | FLAT ENGINE GKT | | |
| 5 | 99475979 | 1 | FLAT ENGINE GKT | | |
| 6 | 16587125 | 2 | HEXAGON BOLT M10X25 MM | | |
| 7 | 504050615 | 1 | OIL LINE | | |
| 8 | 504052088 | 1 | FLAT ENGINE GKT | | |
| 9 | 16586625 | 2 | HEXAGON BOLT M8X35 MM | | |
| 10 | 16500315 | 1 | THREADED UNION M16X1,5 - M18X1,5 | | |
| 11 | 99489019 | 1 | WASHER Ø16X24 MM SP=1,5 MM | | |


Iveco Motors Spare Parts Catalog - Copyright © 2002-2006 Iveco Motors

| OIL FILTERS | 3020.083 |
|---|---|

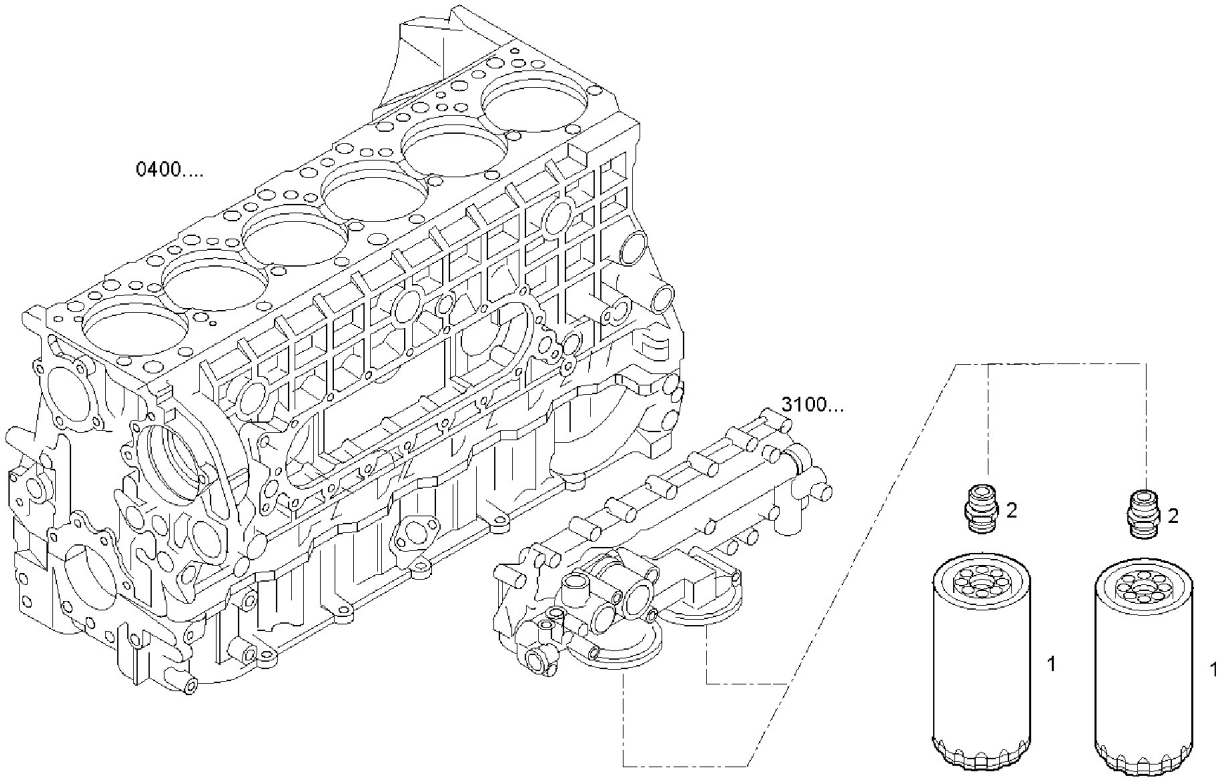


| Item | Part number | Q.ty | Description | See also | Producer Note |
|---|---|---|---|---|---|
| 1 | 2992544 | 2 | OIL FILTER CARTRIDGE | | |
| 2 | 99431947 | 2 | THREADED UNION M30X2 | | |


Iveco Motors Spare Parts Catalog - Copyright © 2002-2006 Iveco Motors

| OIL PRESSURE VALVE | 3030.052 |
|---|---|

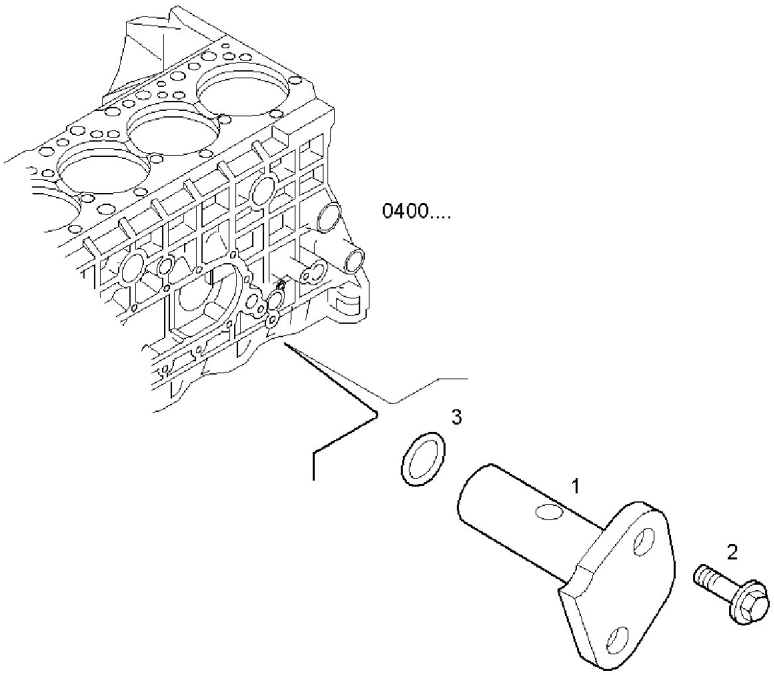


| Item | Part number | Q.ty | Description | See also | Producer Note |
|---|---|---|---|---|---|
| 1 | 500378929 | 1 | VALVE | | |
| 2 | 16586325 | 2 | HEXAGON BOLT M8X20 MM | | |
| 3 | 17288881 | 1 | O-RING Ø28,1 MM SP=3,5 MM | | |


Iveco Motors Spare Parts Catalog - Copyright © 2002-2006 Iveco Motors

| LUBE OIL LINES | 3050.003 |
|---|---|

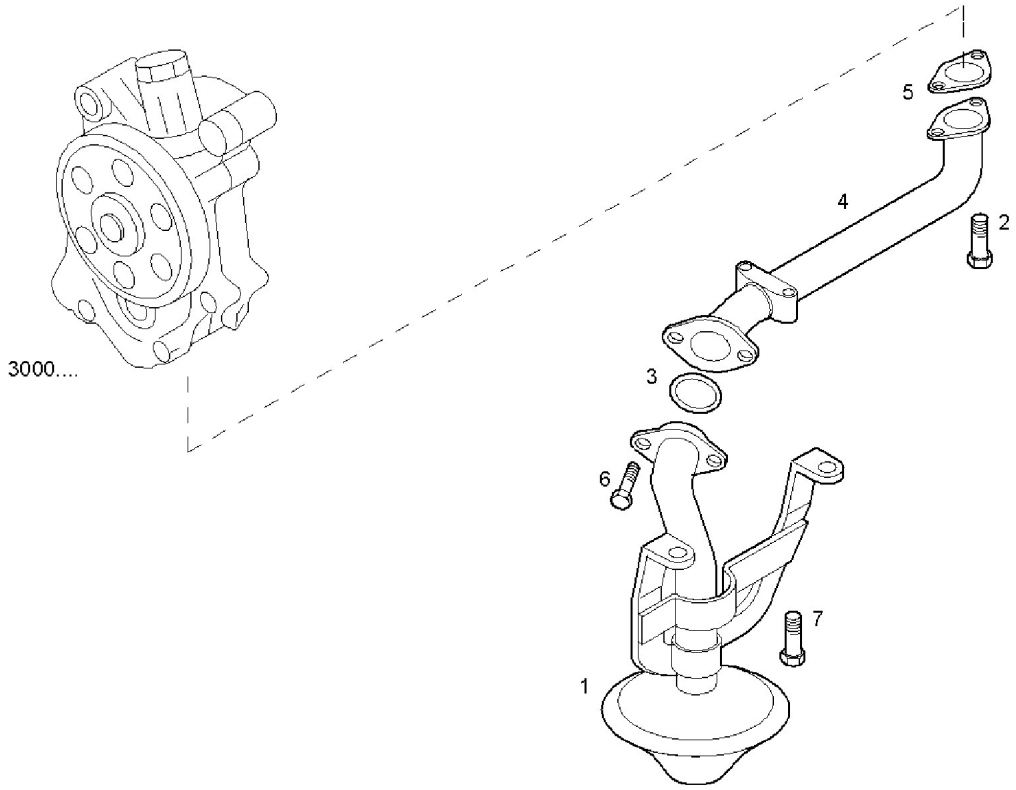


| Item | Part number | Q.ty | Description | See also | Producer Note |
|---|---|---|---|---|---|
| 1 | 99475585 | 1 | SUCTION STRAINER | | |
| 2 | 18138324 | 2 | CYLIND-HEAD SCREW M8X1,25X16 MM | | |
| 3 | 17289481 | 1 | O-RING Ø37,69 MM SP=3,53 MM | | |
| 4 | 99475589 | 1 | OIL LINE | | |
| 5 | 500343518 | 1 | FLAT ENGINE GKT | | |
| 6 | 16592224 | 2 | HEXAGON BOLT M8X55 MM | | |
| 7 | 16673834 | 2 | HEXAGON BOLT M8X30 MM | | |


Iveco Motors Spare Parts Catalog - Copyright © 2002-2006 Iveco Motors

## OIL - WATER HEAT EXCHANGER

3150.005

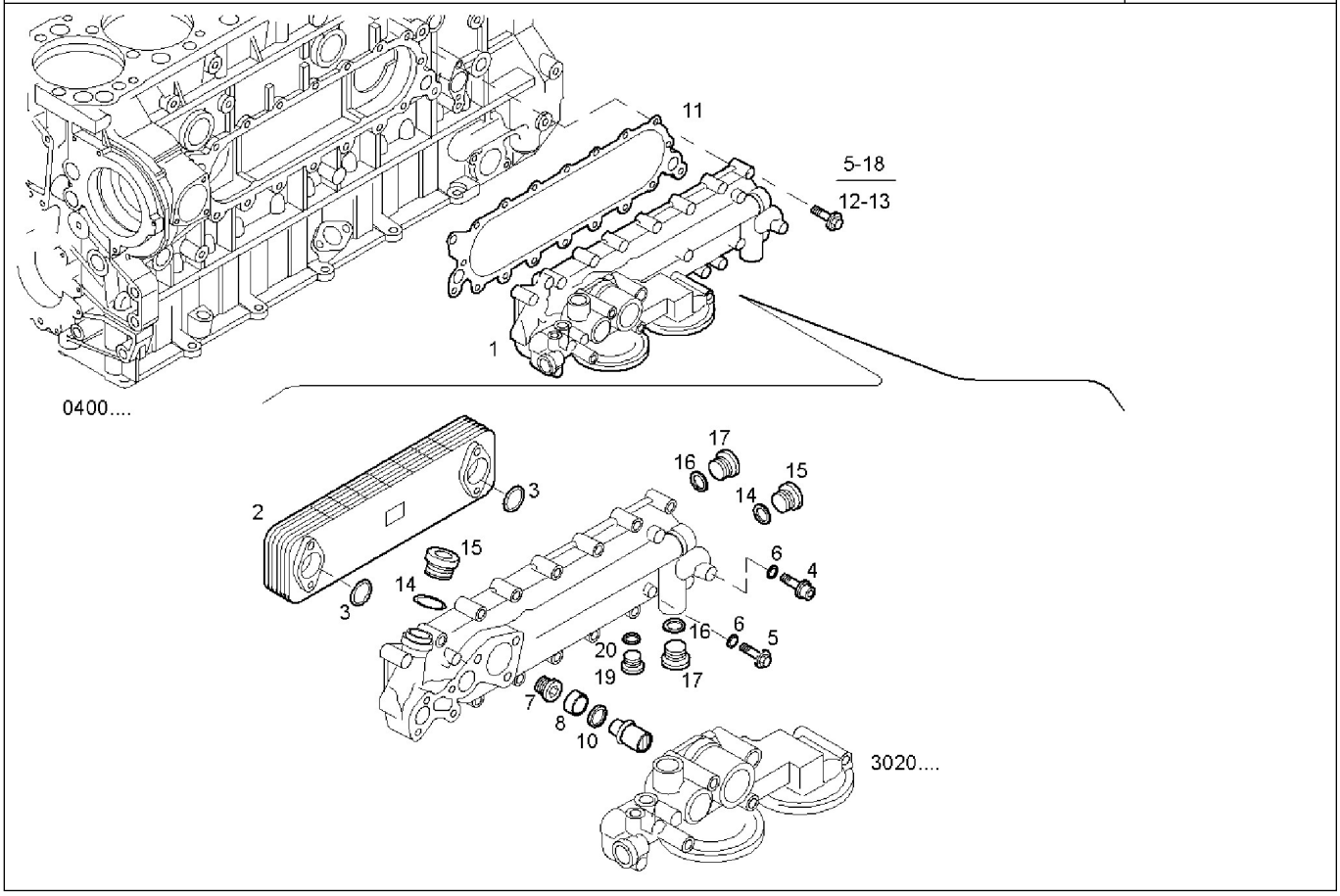


| Item | Part number | Q.ty | Description | See also | Producer Note |
|---|---|---|---|---|---|
| 1 | 504013565 | 1 | HEAT EXANGER BODY | | |
| 2 | 98498467 | 1 | OIL COOLER | | |
| 3 | 17283581 | 2 | O-RING Ø44,12 MM SP=2,62 MM | | |
| 4 | 16586625 | 3 | HEXAGON BOLT M8X35 MM | | |
| 5 | 16586925 | 2 | HEXAGON BOLT M8X50 MM | | |
| 6 | 98474303 | 4 | WASHER Ø8X14 MM SP=2,3 MM | | |
| 7 | 99433799 | 1 | THREADED PLUG M32X1,5 | | |
| 8 | 99433798 | 1 | SPACING BAR Ø28 MM | | |
| 9 | 98498322 | 1 | VALVE | | |
| 10 | 98494952 | 1 | GASKET M35X1,5 | | |
| 11 | 98497873 | 1 | FLAT ENGINE GKT | | |
| 12 | 16586725 | 14 | HEXAGON BOLT M8X1.25X40 MM | | |
| 13 | 16598224 | 2 | HEXAGON BOLT M8X90 MM | | |
| 14 | 99432291 | 2 | SEAL GASKET Ø28 MM | | |
| 15 | 16993511 | 2 | LOCK PLUG M28X1,5 | | |
| 16 | 99469380 | 3 | SEAL GASKET Ø33 MM | | |
| 17 | 16993711 | 3 | THREADED PLUG M35X1,5 | | |
| 18 | 504064192 | 2 | HEXAGON BOLT M8X130 | | |
| 19 | 16992415 | 1 | THREADED PLUG M16X1,5 | | |
| 20 | 99489019 | 1 | WASHER Ø16X24 MM SP=1,5 MM | | |


Iveco Motors Spare Parts Catalog - Copyright © 2002-2006 Iveco Motors

| WATER PUMP | 3201.002 |
|---|---|

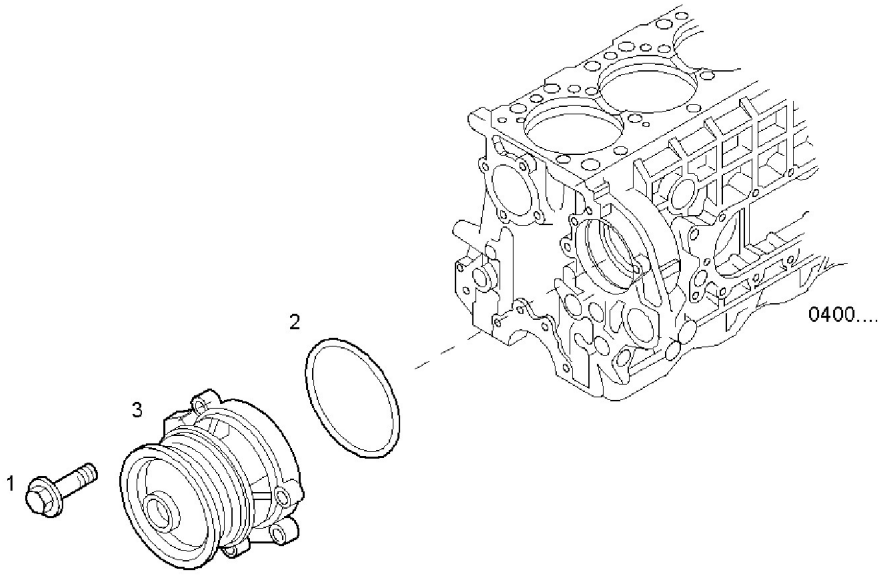


| Item | Part number | Q.ty | Description | See also | Producer Note |
|---|---|---|---|---|---|
| 1 | 16673635 | 4 | HEXAGON BOLT M8X1.25X20 | | |
| 2 | 17292081 | 1 | O-RING Ø120,24 MM SP=3,53 | | |
| 3 | 500356553 | 1 | WATER PUMP | | |


Iveco Motors Spare Parts Catalog - Copyright © 2002-2006 Iveco Motors

| VENTILATOR CONTROL | 3450.002 |
|---|---|

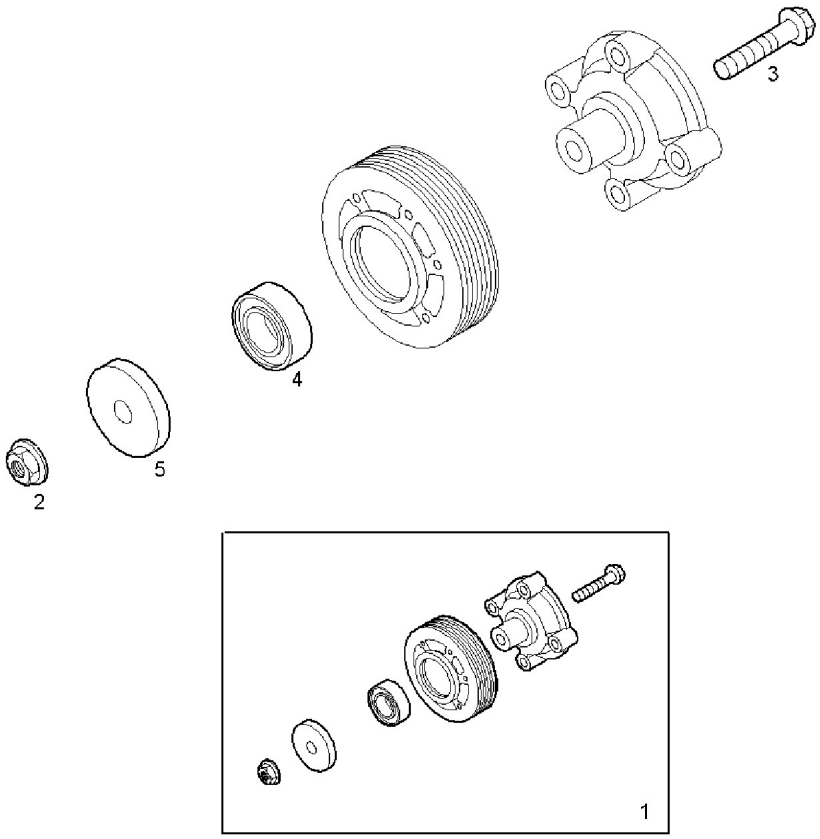


| Item | Part number | Q.ty | Description | See also | Producer Note |
|---|---|---|---|---|---|
| 1 | 500379570 | 1 | SUPPORT ASSY | | |
| 2 | 16984335 | 1 | NUT M10 | | |
| 3 | 16676934 | 1 | HEXAGON BOLT M10X1,5X80 MM | | |
| 4 | 98427607 | 1 | ENGINE BEARINGS | | |
| 5 | 99474237 | 1 | WASHER | | |


Iveco Motors Spare Parts Catalog - Copyright © 2002-2006 Iveco Motors

POWER TAKE OFF | 3500.035

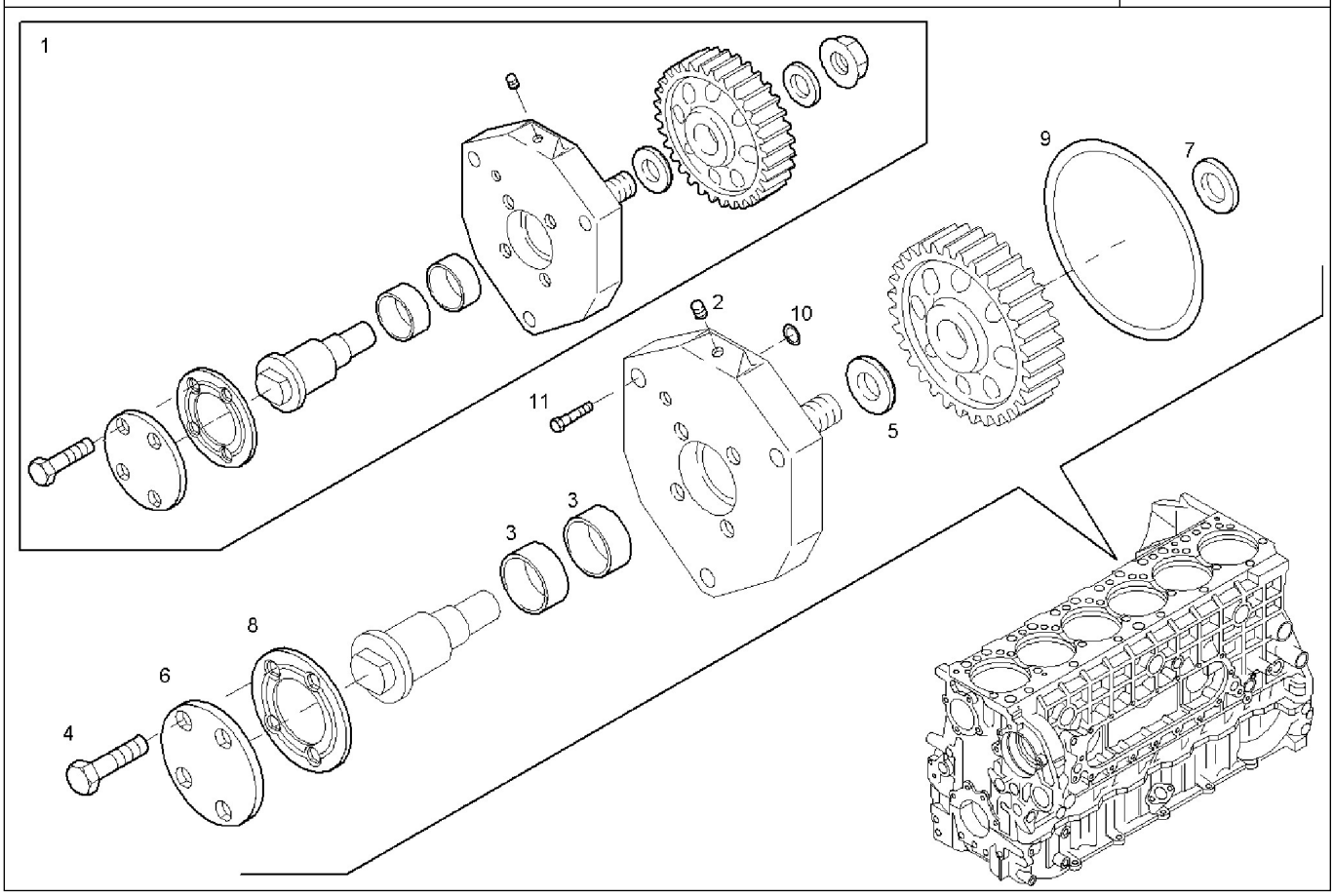


| Item | Part number | Q.ty | Description | See also | Producer Note |
|---|---|---|---|---|---|
| 1 | 500382578 | 1 | POWER TAKE OFF ASSY | | |
| 2 | 504051236 | 1 | THREADED PLUG DIAM=1/8" | | |
| 3 | 4788087 | 2 | BUSH VANDERVELL | | |
| 4 | 18139424 | 4 | HEXAGON BOLT M10X20 MM | | |
| 5 | 500351319 | 1 | WASHER | | |
| 6 | 500355019 | 1 | COVER | | |
| 7 | 500382574 | 1 | WASHER | | |
| 8 | 500355018 | 1 | FLAT ENGINE GKT | | |
| 9 | 17292281 | 1 | O-RING Ø126,59 MM SP=3,53 MM | | |
| 10 | 17281381 | 1 | O-RING Ø9,19 MM | | |
| 11 | 16678135 | 3 | HEXAGON BOLT M12X1,25X45 MM | | |


Iveco Motors Spare Parts Catalog - Copyright © 2002-2006 Iveco Motors

| STARTER MOTOR | 3600.130 |
|---|---|

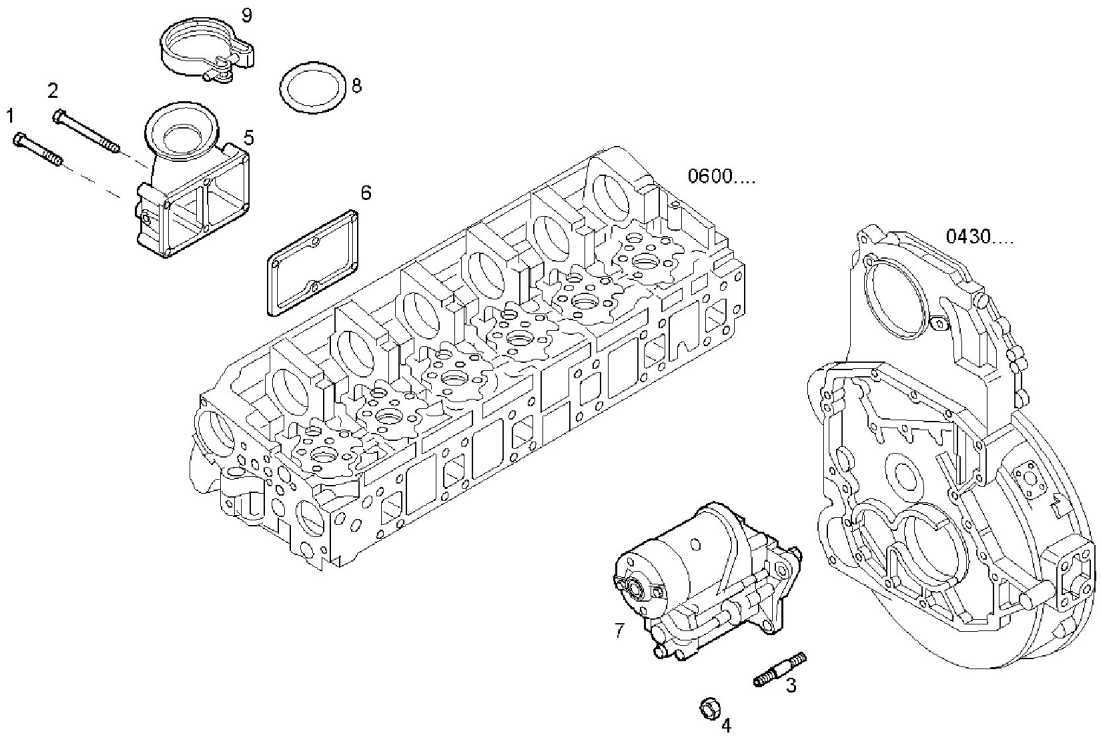


| Item | Part number | Q.ty | Description | See also | Producer Note |
|---|---|---|---|---|---|
| 1 | 16593125 | 5 | HEXAGON BOLT M10X100 MM | | |
| 2 | 16599325 | 1 | HEXAGON BOLT M10X150 | | |
| 3 | 16760524 | 3 | STUD M12X30 | | |
| 4 | 17044921 | 3 | HEXAGON NUT M12 | | |
| 5 | 504074687 | 1 | INTAKE ELBOW | | |
| 6 | 504026624 | 1 | FLAT ENGINE GKT | | |
| 7 | 99486046 | 1 | STARTER MOTOR ALTERNATIVE USE | 3630.049 | |
| 8 | 17291281 | 1 | O-RING Ø94,84 MM SP=3,53 MM | | |
| 9 | 99435103 | 1 | CLIP | | |


Iveco Motors Spare Parts Catalog - Copyright © 2002-2006 Iveco Motors

| STARTER MOTOR (COMPONENTS) | 3630.049 |
|---|---|

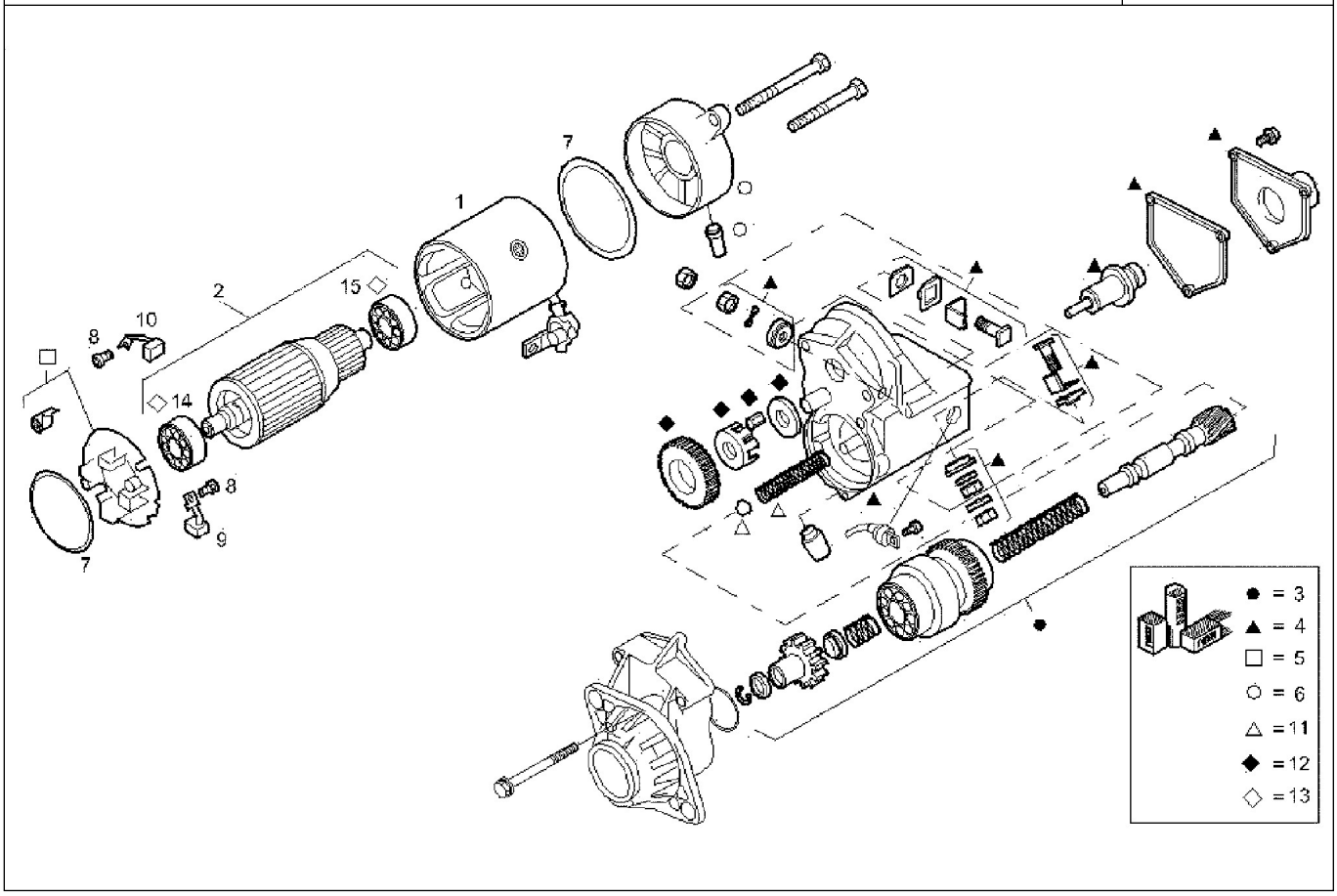


| Item | Part number | Q.ty | Description | See also | Producer Note |
|---|---|---|---|---|---|
| 1 | 42471438 | 1 | STARTER WINDING | | |
| 2 | 42471439 | 1 | KIT-STARTER | | |
| 3 | 42471440 | 1 | KIT-STARTER | | |
| 4 | 42471441 | 1 | KIT-STARTER | | |
| 5 | 42471442 | 1 | KIT-STARTER | | |
| 6 | 42471443 | 1 | KIT-STARTER | | |
| 7 | 42471444 | 2 | O-RING | | |
| 8 | 42471445 | 4 | SCREW | | |
| 9 | 42471446 | 2 | STARTER BRUSH | | |
| 10 | 42471447 | 2 | STARTER BRUSH | | |
| 11 | 42471378 | 1 | KIT-STARTER | | |
| 12 | 42471450 | 1 | KIT-STARTER | | |
| 13 | 42546503 | 1 | KIT-STARTER | | |
| 14 | 42471541 | 1 | ENGINE BEARINGS | | |
| 15 | 42546522 | 1 | ENGINE BEARINGS | | |


Iveco Motors Spare Parts Catalog - Copyright © 2002-2006 Iveco Motors

| THERMO-STARTER | 3650.045 |
|---|---|

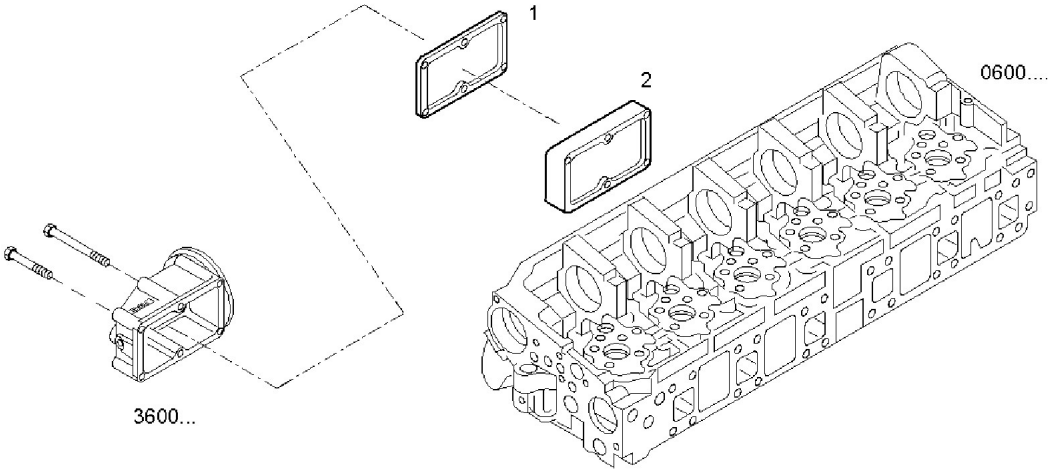


| Item | Part number | Q.ty | Description | See also | Producer Note |
|---|---|---|---|---|---|
| 1 | 504026624 | 1 | FLAT ENGINE GKT | | |
| 2 | 500324439 | 1 | SPACING BAR | | |


Iveco Motors Spare Parts Catalog - Copyright © 2002-2006 Iveco Motors

| HAND STARTER SETTINGS | 3670.005 |
|---|---|

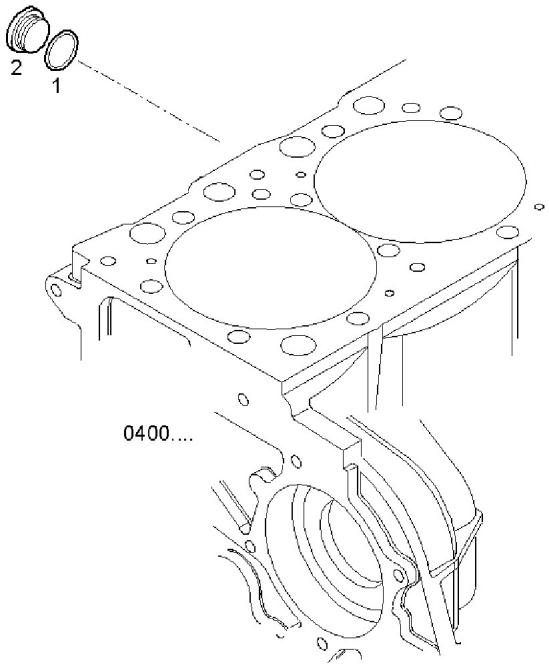


| Item | Part number | Q.ty | Description | See also | Producer Note |
|---|---|---|---|---|---|
| 1 | 99469382 | 1 | SEAL GASKET D=42x50x2 | | |
| 2 | 4665029 | 1 | LOCK PLUG M42X1,5 | | |


Iveco Motors Spare Parts Catalog - Copyright © 2002-2006 Iveco Motors

| GENERATOR | 4000.153 |
|---|---|

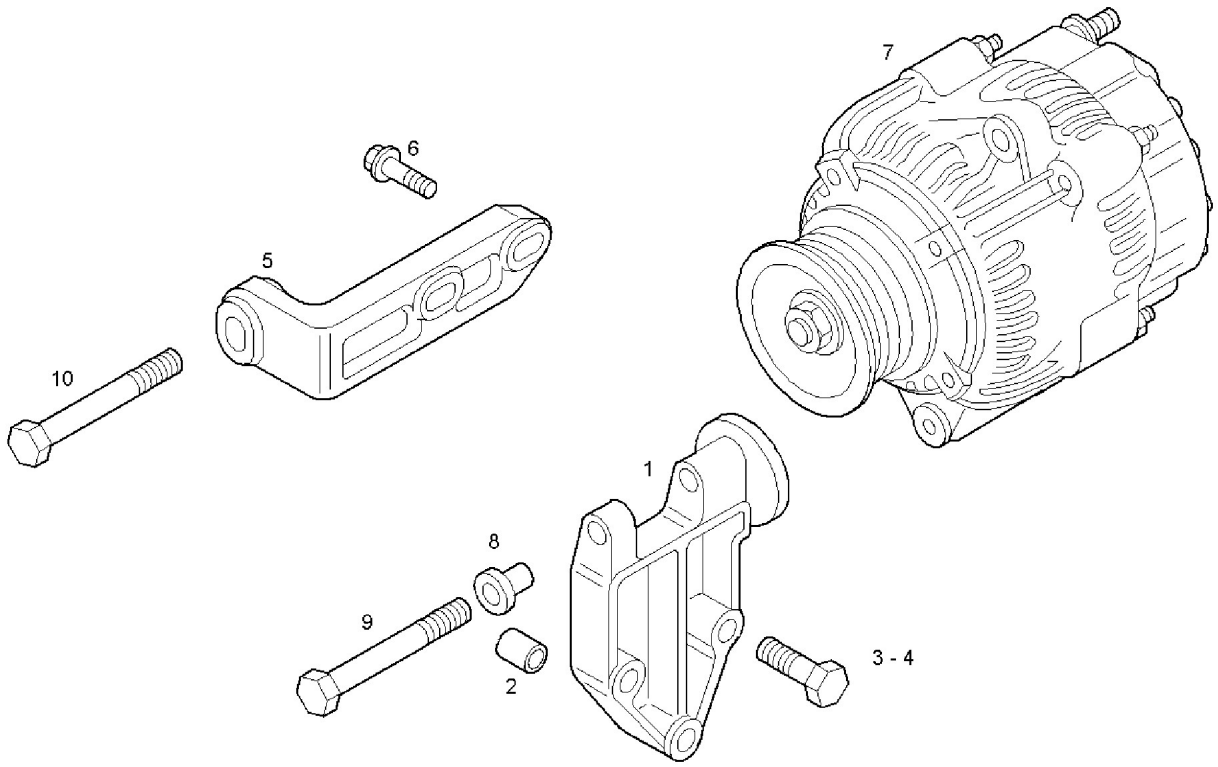


| Item | Part number | Q.ty | Description | See also | Producer Note |
|---|---|---|---|---|---|
| 1 | 500346543 | 1 | GENERATOR SUPPORT | | |
| 2 | 98405462 | 2 | DOWEL PIN Ø10,2 MM | | |
| 3 | 16587824 | 2 | HEXAGON BOLT M10X1,5X60 MM | | |
| 4 | 16587425 | 1 | HEXAGON BOLT M10X40 MM | | |
| 5 | 99458521 | 1 | FASTENING BRACKET | | |
| 6 | 16673835 | 2 | HEXAGON BOLT M8X30 MM | | |
| 7 | 500315943 | 1 | ALTERNATOR | | |
| 8 | 99484032 | 1 | SPACER BUSH | | |
| 9 | 99474161 | 1 | SCREW M10 | | |
| 10 | 16586625 | 1 | HEXAGON BOLT M8X35 MM | | |


Iveco Motors Spare Parts Catalog - Copyright © 2002-2006 Iveco Motors

| GENERATOR | 4000.167 |
|---|---|

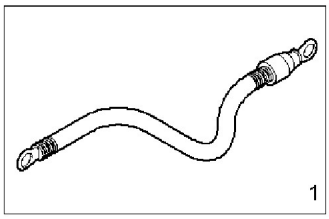


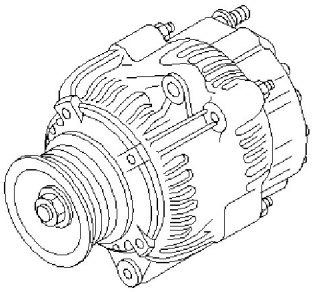

4000....

| Item | Part number | Q.ty | Description | See also | Producer Note |
|---|---|---|---|---|---|
| 1 | 41207263 | 1 | WIRE/CABLE | | |



Iveco Motors Spare Parts Catalog - Copyright © 2002-2006 Iveco Motors

CABLES | 5690.062

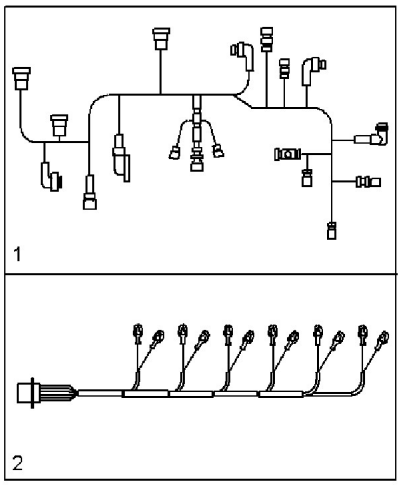


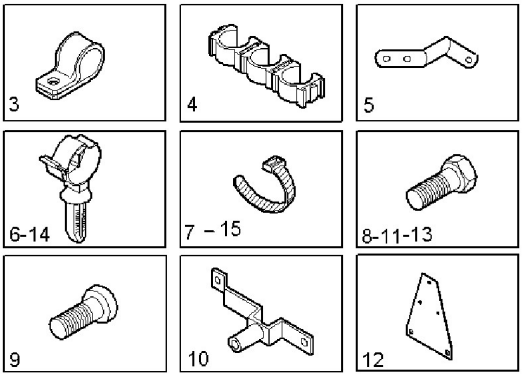


| Item | Part number | Q.ty | Description | See also | Producer Note |
|---|---|---|---|---|---|
| 1 | 504092860 | 1 | ENGINE HARNESS ASSY | | |
| 2 | 500339303 | 1 | WIRE/CABLE FOR INJECTORS | | |
| 3 | 10450990 | 1 | PIPE CLIP | | |
| 4 | 500320256 | 1 | RETAINER | | |
| 5 | 500387097 | 1 | YOKE | | |
| 6 | 504000061 | 1 | CLIP | | |
| 7 | 42099097 | 1 | CABLE STRAP | | |
| 8 | 16592225 | 1 | HEXAGON BOLT M8X55 MM | | |
| 9 | 16689424 | 4 | SOCKET-HEAD SCREW M6X30 MM | | |
| 10 | 500371778 | 1 | FASTENING BRACKET | | |
| 11 | 16596924 | 1 | HEXAGON BOLT M6X10 MM | | |
| 12 | 504067009 | 1 | RETAINER | | |
| 13 | 16597925 | 2 | HEXAGON BOLT M8X14 MM | | |
| 14 | 504000063 | 1 | CLIP | | |
| 15 | 504023286 | 2 | CABLE STRAP | | |


Iveco Motors Spare Parts Catalog - Copyright © 2002-2006 Iveco Motors

| PUSHER FAN | A08010504 |
|---|---|

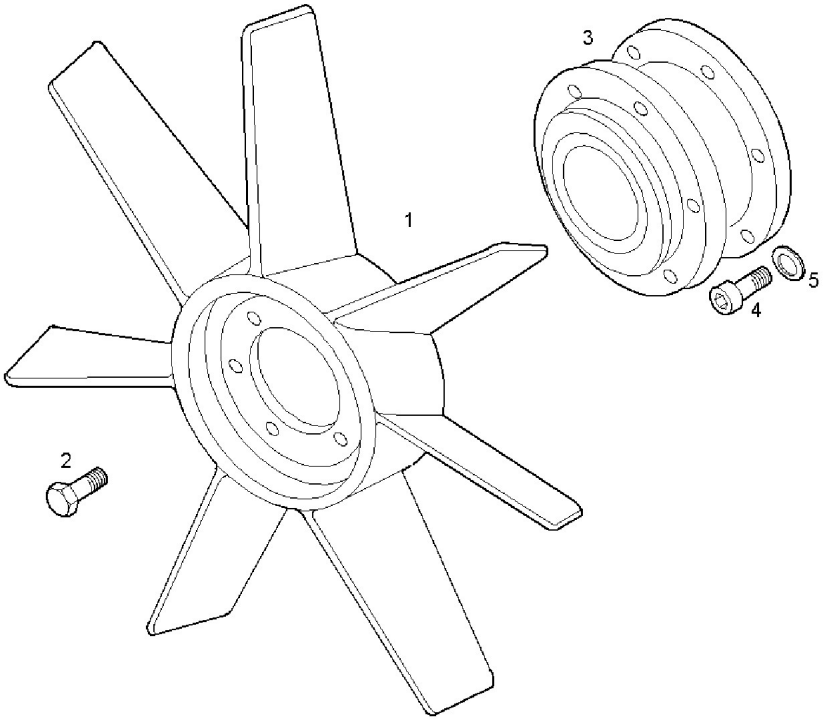


| Item | Part number | Q.ty | Description | See also | Producer Note |
|---|---|---|---|---|---|
| 1 | 8041461 | 1 | FAN | | |
| 2 | 16690625 | 6 | HEXAGON BOLT | | |
| 3 | 8037429 | 1 | HUB | | |
| 4 | 504003975 | 6 | CYLIND-HEAD SCREW M8X1,25X20 | | |
| 5 | 17096824 | 6 | WASHER Ø8,40X15 MM | | |


Iveco Motors Spare Parts Catalog - Copyright © 2002-2006 Iveco Motors

AIR CLEANER | A21210524

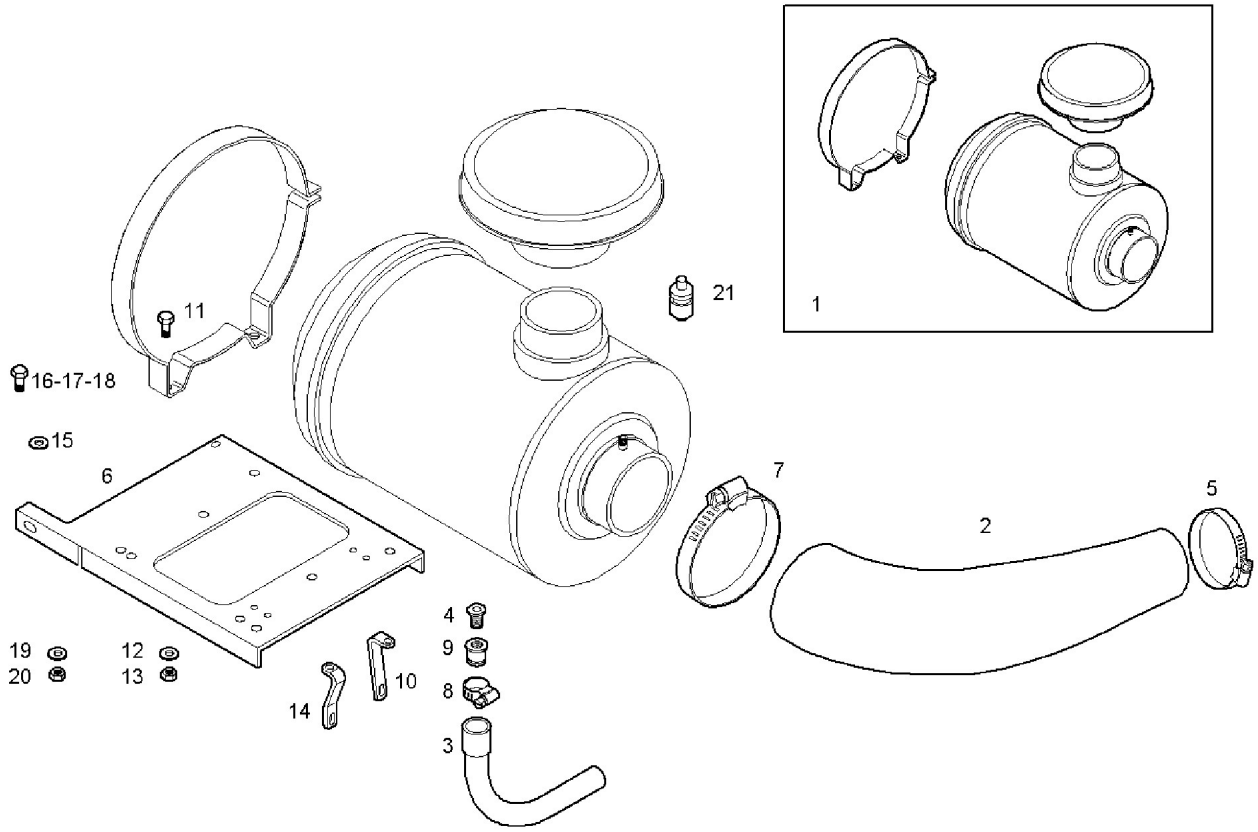


| Item | Part number | Q.ty | Description | See also | Producer Note |
|---|---|---|---|---|---|
| 1 | 8025042 | 1 | AIR CLEANER ASSY | T21210524 | |
| 2 | 8040929 | 1 | FILTER HOSE | | |
| 3 | 8041545 | 1 | RUBBER SLEEVE | | |
| 4 | 8015315 | 1 | PIPE SOCKET | | |
| 5 | 17765892 | 1 | HOSE CLIP Ø140/160 MM | | |
| 6 | 8040926 | 1 | SUPPORT | | |
| 7 | 17766393 | 1 | CLIP | | |
| 8 | 17764791 | 1 | CLIP Ø32/50 MM | | |
| 9 | 8015133 | 1 | PIPE SOCKET | | |
| 10 | 8040928 | 2 | RETAINER | | |
| 11 | 16609825 | 4 | HEXAGON BOLT M12X1,75X25 | | |
| 12 | 17091074 | 4 | WASHER Ø12X24X2,8 MM | | |
| 13 | 17038425 | 4 | HEXAGON NUT M12 (8) | | |
| 14 | 8040927 | 1 | RETAINER | | |
| 15 | 17816214 | 1 | SPACER Ø10X8,5X18 MM | | |
| 16 | 16605624 | 3 | HEXAGON BOLT M8X25 MM (8.8) | | |
| 17 | 16605734 | 1 | HEXAGON BOLT M8X30 MM | | |
| 18 | 16605424 | 3 | SCREW M8X16 MM (8.8) | | |
| 19 | 17037925 | 6 | HEXAGON NUT M8X1,25 | | |
| 20 | 17089474 | 1 | SPRING WASHER Ø8X16 MM SP=1,4 MM | | |


Iveco Motors Spare Parts Catalog - Copyright © 2002-2006 Iveco Motors

AIR CLEANER | A21210524

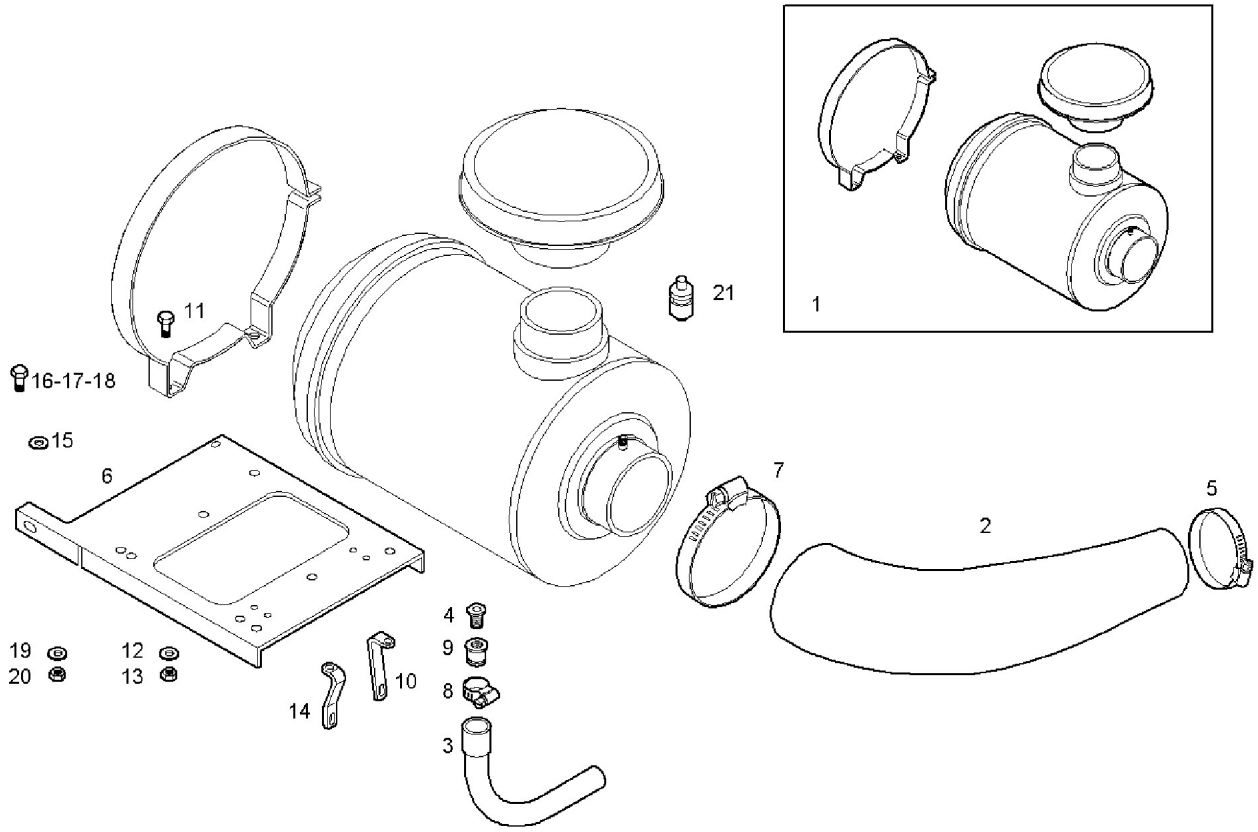


| Item | Part number | Q.ty | Description | See also | Producer Note |
|---|---|---|---|---|---|
| 21 | 8027294 | 1 | CHOCKED FILTER INDIC. MECHANICAL | | |


Iveco Motors Spare Parts Catalog - Copyright © 2002-2006 Iveco Motors

| FUEL TANK | A29215002 |
|---|---|

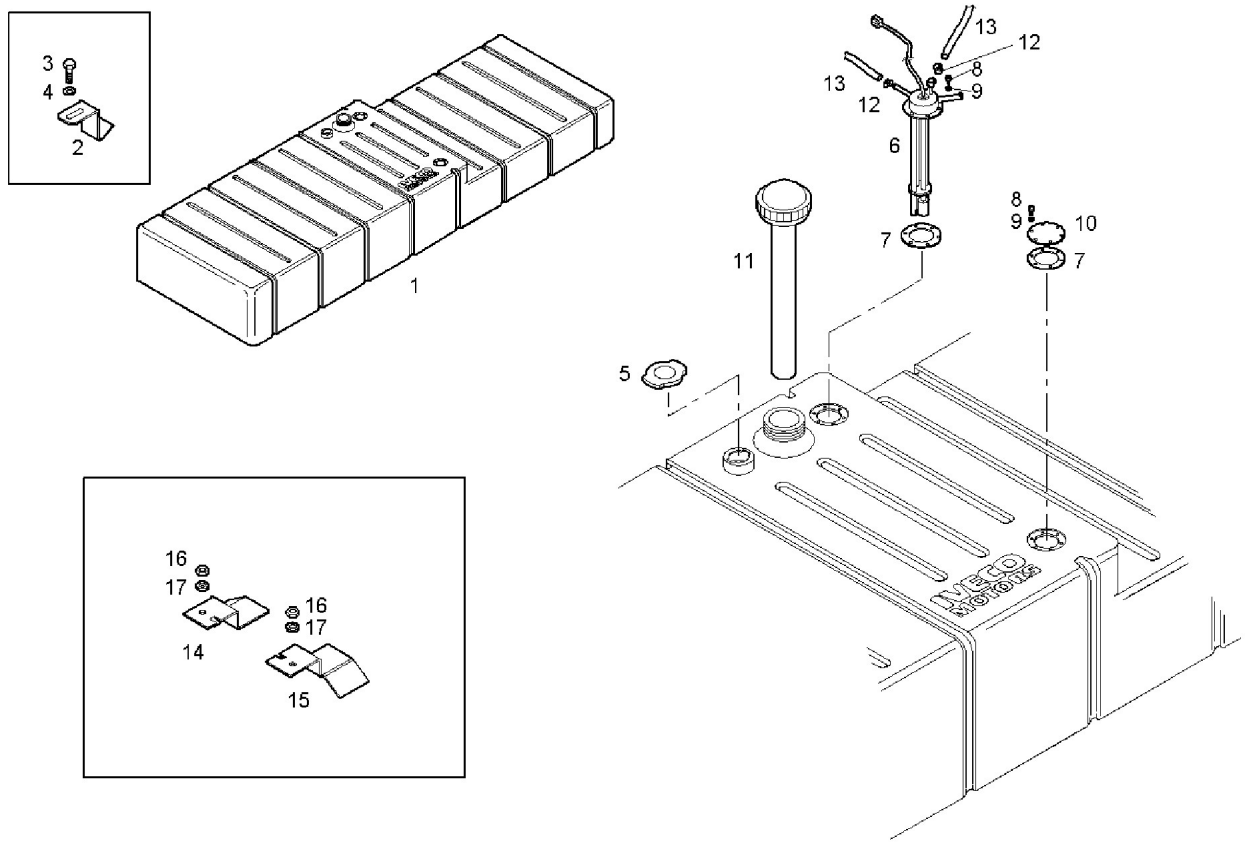


| Item | Part number | Q.ty | Description | See also | Producer Note |
|---|---|---|---|---|---|
| 1 | 503111804 | 1 | TANK | | |
| 2 | 503111785 | 2 | RETAINER | | |
| 3 | 16605624 | 4 | HEXAGON BOLT M8X25 MM (8.8) | | |
| 4 | 17089474 | 4 | SPRING WASHER Ø8X16 MM SP=1,4 MM | | |
| 5 | 2993924 | 1 | FUEL TANK PLUG | | |
| 6 | 503112816 | 1 | CONTROL ASSEMBLY ASSY | | |
| 7 | 8030334 | 1 | FLAT ENGINE GKT | | |
| 8 | 16687824 | 12 | CYLIND-HEAD SCREW | | |
| 9 | 11199279 | 12 | SPRING WASHER Ø5X10X0,5 MM | | |
| 10 | 503111987 | 1 | COVER | | |
| 11 | 8030287 | 1 | FUEL LEVEL GAUGE | | |
| 12 | 18087993 | 4 | CLIP Ø8/16 MM | | |
| 13 | 19056687 | 2 | RUBBER HOSE Ø7,5 MM | | |
| 14 | 503111786 | 1 | RETAINER | | |
| 15 | 503111787 | 1 | RETAINER | | |
| 16 | 17037925 | 2 | HEXAGON NUT M8X1,25 | | |
| 17 | 17094914 | 2 | WASHER Ø8,4X16 MM | | |


Iveco Motors Spare Parts Catalog - Copyright © 2002-2006 Iveco Motors

STARTER BATTERY | A30515002

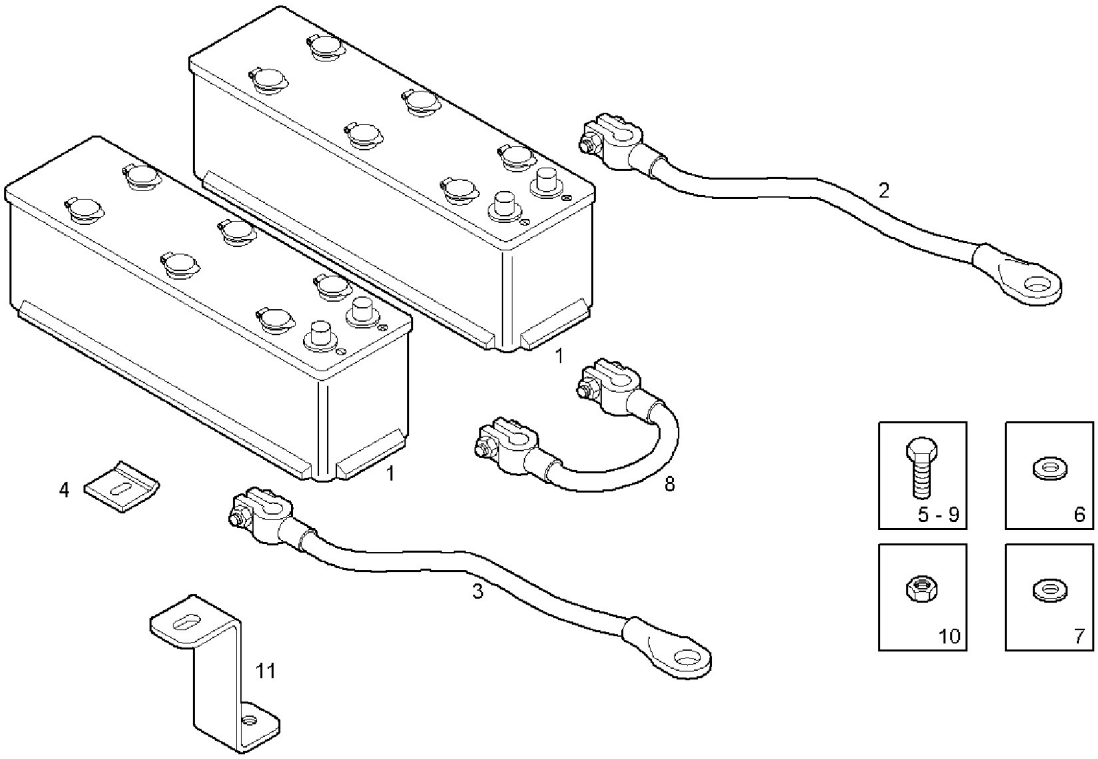


| Item | Part number | Q.ty | Description | See also | Producer Note |
|---|---|---|---|---|---|
| 1 | 8022948 | 2 | BATTERY 12V | | |
| 2 | 503112739 | 1 | WIRE/CABLE + | | |
| 3 | 503112740 | 1 | WIRE/CABLE - | | |
| 4 | 8024305 | 2 | RETAINER | | |
| 5 | 16607625 | 6 | SCREW M10X25 | | |
| 6 | 16665604 | 4 | WASHER Ø10X20 MM | | |
| 7 | 17090474 | 8 | SPRING WASHER Ø10X27 MM SP=2,5 | | |
| 8 | 503112738 | 1 | WIRE/CABLE | | |
| 9 | 16607424 | 2 | SCREW M10X16 | | |
| 10 | 17038131 | 4 | HEXAGON NUT M10 (10) | | |
| 11 | 503111670 | 2 | RETAINER | | |


Iveco Motors Spare Parts Catalog - Copyright © 2002-2006 Iveco Motors

| GUARD for fan | A48010503 |
|---|---|

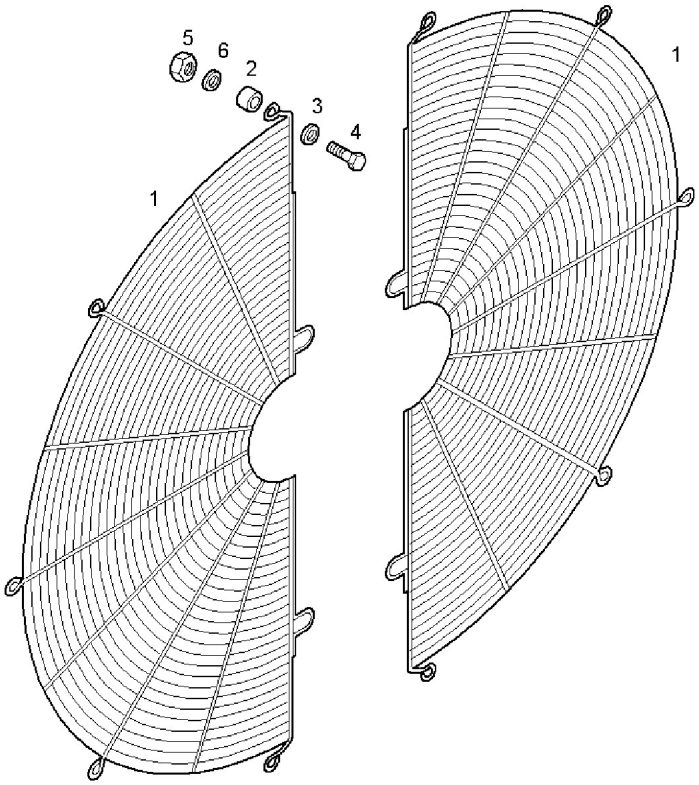


| Item | Part number | Q.ty | Description | See also | Producer Note |
|---|---|---|---|---|---|
| 1 | 8028460 | 2 | PROTECTION | | |
| 2 | 17816014 | 10 | SPACING BAR Ø8,5X18X5 MM | | |
| 3 | 17089774 | 10 | SPRING WASHER Ø8,4X22 MM SP=2,4 MM | | |
| 4 | 16605624 | 10 | HEXAGON BOLT M8X25 MM (8.8) | | |
| 5 | 17037925 | 10 | HEXAGON NUT M8X1,25 | | |
| 6 | 17089474 | 10 | SPRING WASHER Ø8X16 MM SP=1,4 MM | | |


Iveco Motors Spare Parts Catalog - Copyright © 2002-2006 Iveco Motors

| GUARD for pulley/belts | A48020506 |
|---|---|

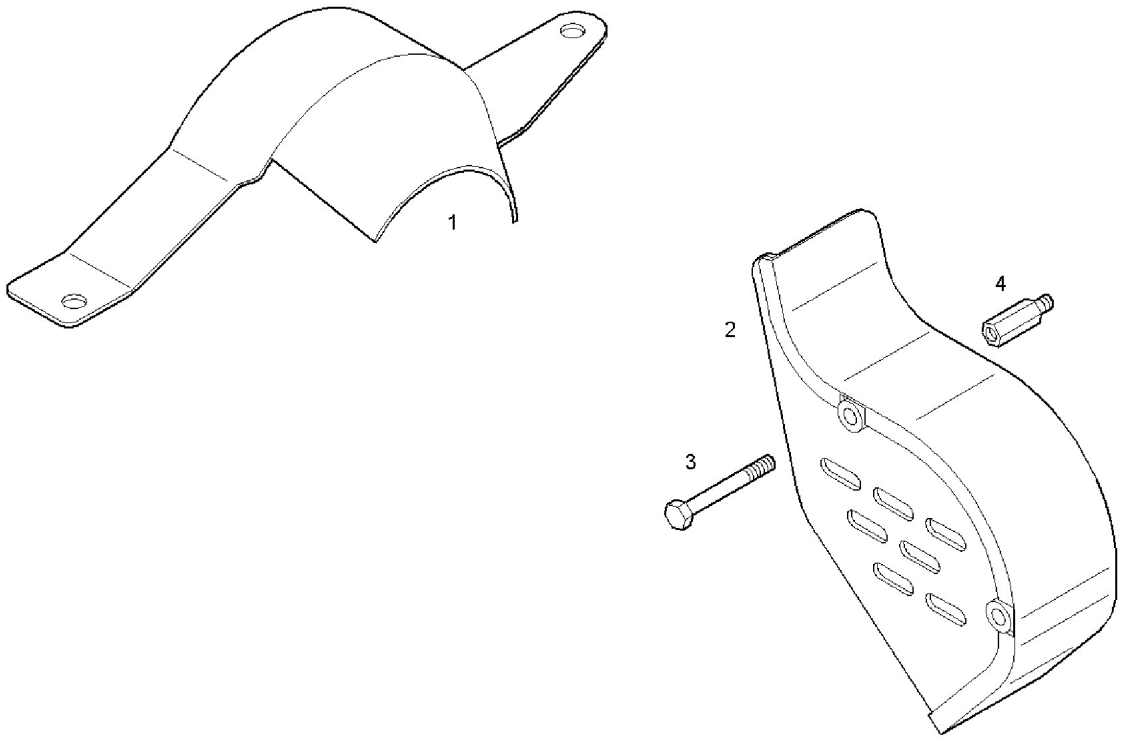


| Item | Part number | Q.ty | Description | See also | Producer Note |
|---|---|---|---|---|---|
| 1 | 8041225 | 1 | PROTECTION | | |
| 2 | 8041239 | 1 | PROTECTION | | |
| 3 | 16592424 | 2 | HEXAGON BOLT M8X65 MM | | |
| 4 | 8033833 | 2 | SPACING BAR M8 | | |


Iveco Motors Spare Parts Catalog - Copyright © 2002-2006 Iveco Motors

| SENDER UNITS ALARMS INSTRUMENT | A68305001 |
|---|---|

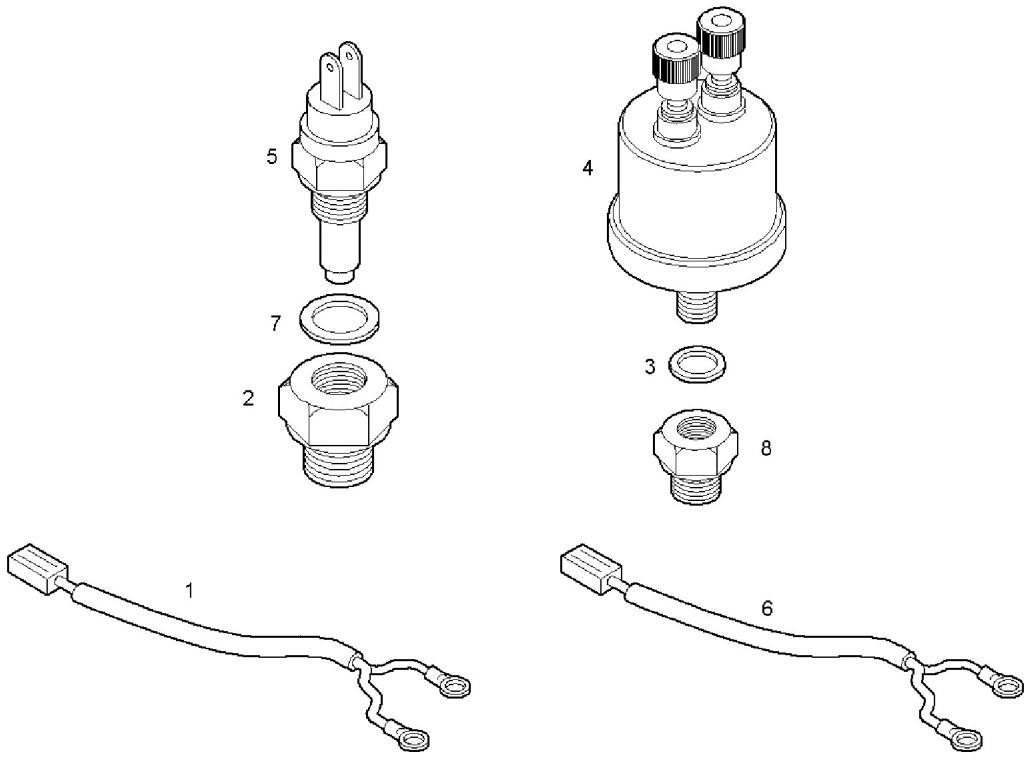


| Item | Part number | Q.ty | Description | See also | Producer Note |
|---|---|---|---|---|---|
| 1 | 8031966 | 1 | WIRE/CABLE | | |
| 2 | 4928330 | 1 | PIPE SOCKET M16X1,5/M14X1,5 | | |
| 3 | 99489018 | 1 | SEAL GASKET Ø14X22 MM SP=1,5 MM | | |
| 4 | 8031697 | 1 | TRANSMITTER | | |
| 5 | 8108436 | 1 | TRANSMITTER IATA-TTA | | |
| 6 | 8031965 | 1 | WIRE/CABLE | | |
| 7 | 99489019 | 1 | WASHER Ø16X24 MM SP=1,5 MM | | |
| 8 | 8031698 | 1 | PIPE SOCKET M14X1,5 | | |


Iveco Motors Spare Parts Catalog - Copyright © 2002-2006 Iveco Motors

CONTROL PANEL (COMPONENTS) Compact Mage 24V | Q0000119

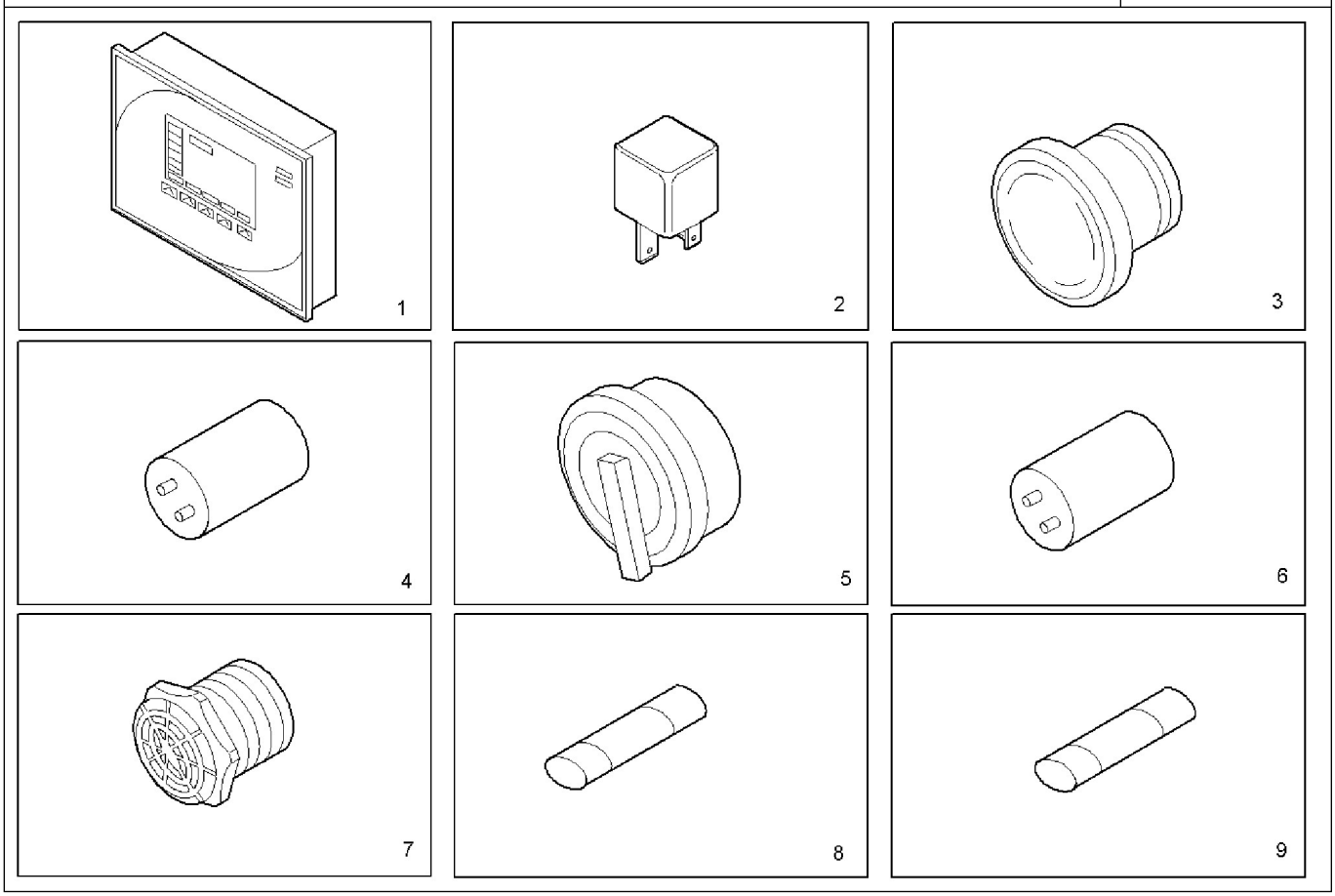


| Item | Part number | Q.ty | Description | See also | Producer Note |
|---|---|---|---|---|---|
| 1 | 8095011 | 1 | SWITCH PANEL | | |
| 2 | 8095013 | 1 | RELAY 24V | | |
| 3 | 8095014 | 1 | PUSH BUTTON arresto | | |
| 4 | 8095015 | 1 | CONNECTION | | |
| 5 | 8095016 | 1 | SWITCH | | |
| 6 | 8095017 | 1 | CONNECTION | | |
| 7 | 8095018 | 1 | ACOUSTIC HORN | | |
| 8 | 8095019 | 1 | FUSE 10x38 2A | | |
| 9 | 8095020 | 1 | FUSE 10x38 4A | | |


Iveco Motors Spare Parts Catalog - Copyright © 2002-2006 Iveco Motors

| DRY AIR CLEANER (components) | T21210524 |
|---|---|

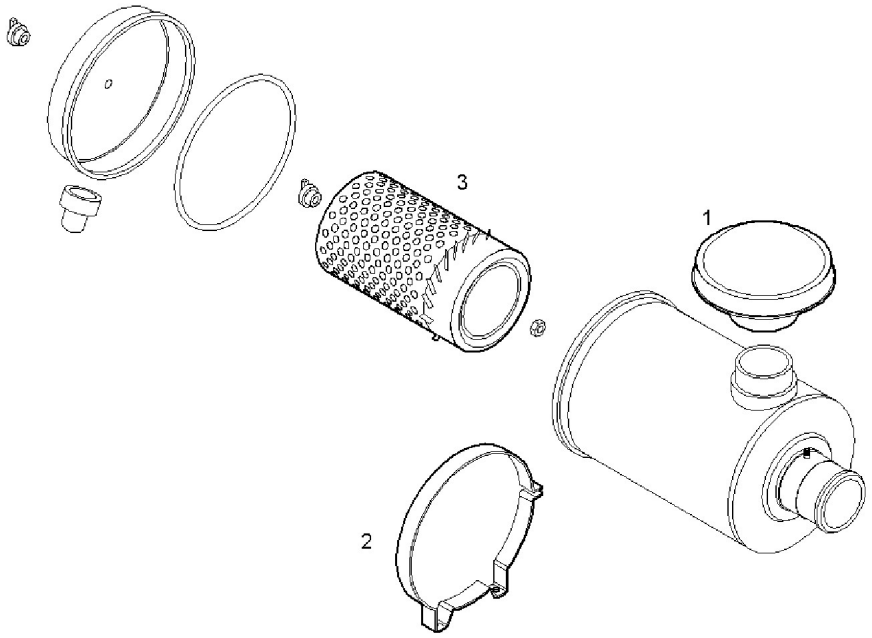


| Item | Part number | Q.ty | Description | See also | Producer Note |
|---|---|---|---|---|---|
| 1 | 8025819 | 1 | FILTER COVER | | |
| 2 | 8025820 | 2 | CLIP | | |
| 3 | 8025818 | 1 | AIR FILTER ELEMENT PRIMARY | | |


Iveco Motors Spare Parts Catalog - Copyright © 2002-2006 Iveco Motors

| RADIATOR 2 CIRCUITS AIR/WATER (COMPONETS ) | T22480501 |
|---|---|

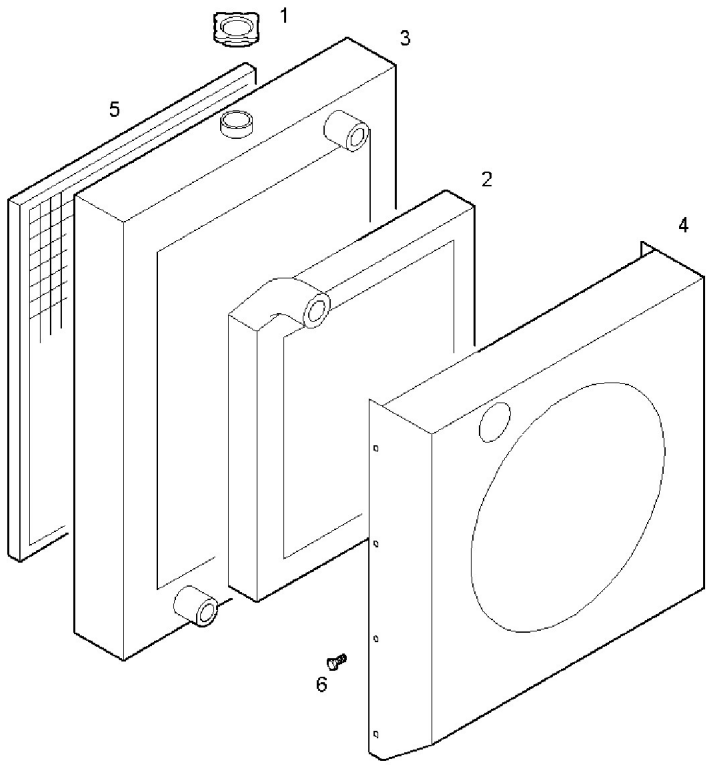


| Item | Part number | Q.ty | Description | See also | Producer Note |
|---|---|---|---|---|---|
| 1 | 8107632 | 1 | RADIATOR PLUG | | |
| 2 | 8036066 | 1 | INTERCOOLER | | |
| 3 | 8036040 | 1 | WATER RADIATOR | | |
| 4 | 8036585 | 1 | AIR HOOD | | |
| 5 | 8036584 | 1 | PROTECTION | | |
| 6 | 16673635 | 26 | HEXAGON BOLT M8X1.25X20 | | |


Iveco Motors Spare Parts Catalog - Copyright © 2002-2006 Iveco Motors

ELECTRIC MACHINE (COMPONENTS) for Marelli | T37215010

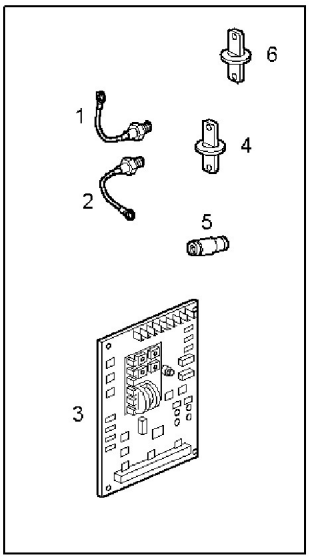


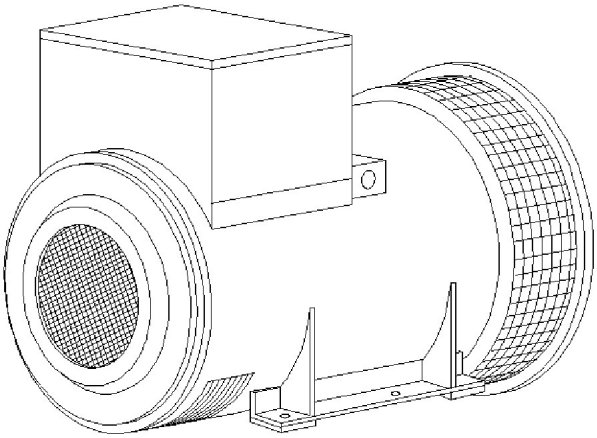

| Item | Part number | Q.ty | Description | See also | Producer Note |
|---|---|---|---|---|---|
| 1 | 8106487 | 1 | EL.MACHINE DIODE MARELLI - FORWARD | | |
| 2 | 8106488 | 1 | EL.MACHINE DIODE MARELLI - REVERSE | | |
| 3 | 8094732 | 1 | EL.MACHINE VOLTAGE REGUL. MARELLI | | |
| 4 | 8093676 | 1 | SUPPRESSOR MARELLI | | |
| 5 | 8093686 | 1 | FUSE 10 A | | |
| 6 | 8093687 | 1 | EL.MACHINE RECTIFIER MARELLI | | |


Iveco Motors Spare Parts Catalog - Copyright © 2002-2006 Iveco Motors