https://truckmanualshub.com/

SELLICK S162

ROUGH TERRAIN FORKLIFT

16,000 lb. Capacity

Tier 4 Compliant Engine

Powershift Transmission

Powerful

Rugged

Dependable

Powered by T4 ecoMAX

https://truckmanualshub.com/

S162 ROUGH TERRAIN FORKLIFT

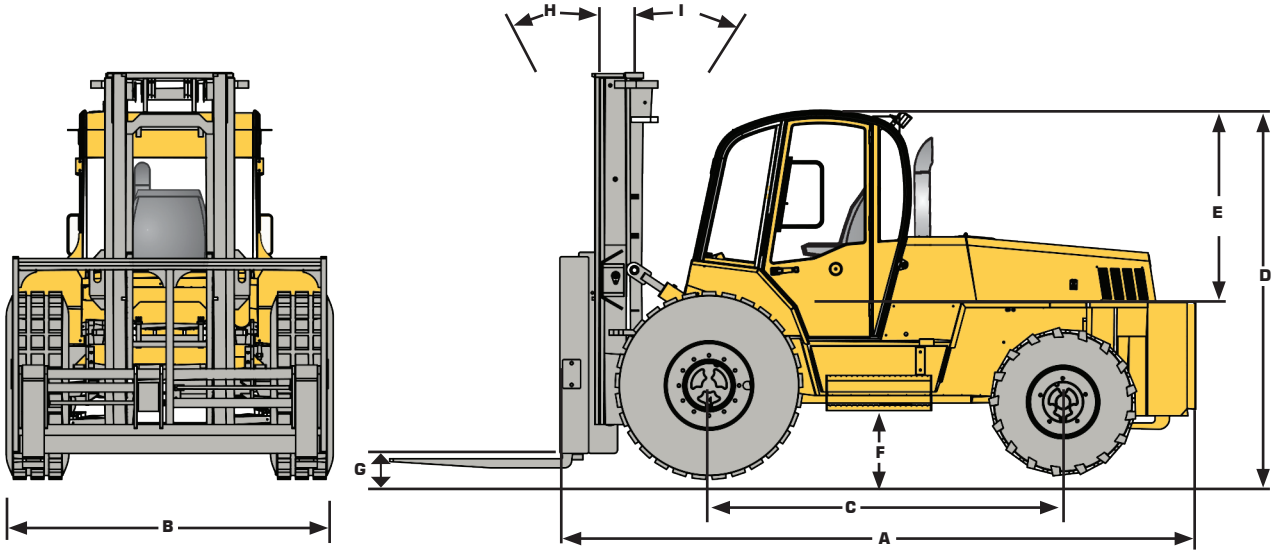

	REF	S162
Overall length	A	173” / 4395 mm
Overall width	B	91” / 2311 mm
Wheelbase	C	99” / 2514 mm
Height to top of overhead guard	D	101” / 2565 mm
Distance from seat to overhead guard	E	43” / 1092 mm
Frame underclearance	F	18” / 457 mm
Mast underclearance	G	12” / 305 mm
Mast tilt - forward	H	20°
Mast tilt - rearward	I	12°
Lift capacities @ 24” load center		16000 lbs / 7257 kg
Base operating weight (standard chassis & mast)		TBD lbs / TBD kg
Outside turning radius		209” / 5309 mm
Gradeability		25%
Max. travel speed		15 mph / 25 kph
Tire size and type		Drive : 15.5 X 25, 16 ply Steer: 15 X 19.5, 14 ply
Electrical system		Alternator - 95 A; Battery 1 000 CCA (12 volt system)
Engine model		ECOMAX T4
Cylinders		4
Engine output (gross power)		74 hp @ 2200 rpm
Peak torque		295 ft lbs @ 1200 rpm
Transmission manufacturer & type		PS750 Powershift
Axles		Front: PD87 Series Rear: S55 Series

Because of our constant dedication to product improvement, all specifications are subject to change without notice.

— All Sellick forklifts meet or exceed all ANSI B56.6 safety standards. —

SELLICK
Sellick Equipment Limited
P.O. Box 1000
Harrow, Ontario, Canada N0R 1G0
519-738-2255 • sellick@mnsi.net
Visit us at www.sellickequipment.com

Sold & serviced by: